ENGINEERING CORP.

GEOTECHNICAL INVESTIGATION

KEEGANS BAYOU WWTP IMPROVEMENTS
WBS NO. R-000265-0079-3
HOUSTON, TEXAS

Reported to:

Infrastructure Associates
Houston, Texas

by

Aviles Engineering Corporation
5790 Windfern
Houston, Texas 77041
713-895-7645

REPORT NO. G131-13R1

September 2014

September 17, 2014

Mr. Eric Cardwell, P.E.
Infrastructure Associates, Inc.
6117 Richmond Avenue, Suite 200
Houston, Texas 77057

Reference: **Geotechnical Investigation**
Keegans Bayou Wastewater Treatment Plant Improvements
9500 White Chapel Lane
Houston, Texas
AEC Report No. G131-13

Dear Mr. Cardwell,

Aviles Engineering Corporation (AEC) is pleased to present this report of our geotechnical investigation for the above referenced project. This investigation was authorized via email by Mr. Eric Cardwell, P.E. of Infrastructure Associates, Inc., on May 16, 2013, based upon AEC Proposal No. G2013-04-14R1, dated May 2, 2013.

AEC appreciates the opportunity to be of service to you. Please call us if you have any questions or comments concerning this report or when we can be of further assistance.

Respectfully submitted,
Aviles Engineering Corporation
(TBPE Firm Registration No. F-42)

9/17/2014
STATE OF TEXAS
WILBER L. WANG
99226
LICENSED
PROFESSIONAL ENGINEER

Wilber L. Wang, M.Eng., P.E.
Project Engineer

Shou Ting Hu, M.S.C.E., P.E.
Principal Engineer

Reports Submitted: 3 Infrastructure Associates, Inc.
1 File (electronic)

Z:\ENGINEERING\REPORTS\2013\131-13 KEEGANS BAYOU WWTP IMPROVEMENTS - INFRASTRUCTURE ASSOCIATES (WILBER)\G131-13R1 FINAL.DOCX

AVILES ENGINEERING CORP.

TABLE OF CONTENTS

EXECUTIVE SUMMARY i
1.0 INTRODUCTION 1
1.1 Project Description 1
1.2 Purpose and Scope 1
2.0 SUBSURFACE EXPLORATION 1
3.0 LABORATORY TESTING 2
4.0 SITE CONDITIONS 2
4.1 Subsurface Conditions 2
4.2 Hazardous Materials 3
4.3 Subsurface Variations 3
5.0 ENGINEERING ANALYSIS AND RECOMMENDATIONS 4
5.1 Grit Chamber 4
5.1.1 Mat Foundation 4
5.1.2 Grit Chamber Pit 5
5.1.3 Pit Excavation 7
5.2 Elevated Structural Slab and Influent/Effluent Channels 10
5.2.1 Drilled-and-Underreamed Footings 10
5.3 Select Fill 12
6.0 CONSTRUCTION CONSIDERATIONS 13
6.1 Site Preparation and Grading 13
6.2 Groundwater Control 13
6.3 Construction Monitoring 14
6.4 Monitoring of Existing Structures 14
7.0 GENERAL 15
8.0 LIMITATIONS 15

APPENDICIES

Appendix A

Plate A-1	Vicinity Map
Plate A-2	Boring Location Plan
Plate A-3	Boring Logs
Plate A-4	Key to Symbols
Plate A-5	Classification of Soils for Engineering Purposes
Plate A-6	Terms Used on Boring Logs
Plate A-7	ASTM & TXDOT Designation for Soil Laboratory Tests

Appendix B

Plate B-1	Critical Heights of Cuts in Nonfissured Clays
Plate B-2	Maximum Allowable Slopes
Plate B-3	A Combination of Bracing and Open Cuts
Plate B-4	Lateral Pressure Diagrams for Open Cuts in Cohesive Soil-Long Term Conditions
Plate B-5	Lateral Pressure Diagrams for Open Cuts in Cohesive Soil-Short Term Conditions
Plate B-6	Lateral Pressure Diagrams for Open Cuts in Sand
Plate B-7	Bottom Stability for Braced Excavation in Clay
Plate B-8	Buoyant Uplift Design

ENGINEERING CORP.

EXECUTIVE SUMMARY

This report presents the results of a geotechnical investigation performed by Aviles Engineering Corporation (AEC) for the proposed City of Houston (COH) Keegans Bayou Wastewater Treatment Plant (WWTP) Improvements, located at 9500 White Chapel Lane, in Houston, Texas (Houston/Harris County Key Map: 530S). According to Infrastructure Associates, the proposed improvements include: (i) a new 20 foot inner diameter grit chamber with perimeter wall that is 15 feet above grade plus a 6.5 foot deep pit; (ii) a new elevated structural slab adjacent to the grit chamber; and (iii) two new elevated concrete channels supported on piers.

Our findings are summarized below:

- Based on Boring B-1, the subsurface soil conditions at the proposed grit chamber generally consist of approximately 2 feet of hard fat clay (CH) fill at the ground surface, underlain by stiff to hard fat/lean clay (CH/CL) to the boring termination depth of 40 feet below grade.

- Details of the soils encountered during drilling are presented on the representative boring log. The cohesive soils encountered in Boring B-1 have Liquid Limits (LL) ranging from 47 to 58 and Plasticity Indices (PI) ranging from 29 to 40. This indicates that the cohesive soils have high expansive potential. The cohesive soils encountered are classified as "CL" and "CH" type soils in accordance with ASTM D 2487.

- Groundwater was encountered at a depth of 30 feet during drilling and subsequently was observed at a depth of 21.8 feet approximately 15 minutes after the initial encounter in Boring B-1. Groundwater at the grit chamber site could be pressurized.

- We did not detect any visual evidence or odor indicating the presence of hazardous materials in the soil samples. However, AEC notes that the presence of potential hazardous material within the project area cannot be discounted based upon the very small and limited number of samples taken.

- Recommendations for design and construction of the grit chamber are presented in Section 5.1 of this report.

- Recommendations for design and construction of the elevated structural slab and elevated concrete channels are presented in Section 5.2 of this report.

- Recommendations for controlling ground water during construction are presented in Section 6.2 of this report.

- This Executive Summary provides an overview of the geotechnical investigation and should not be used without the full text of this report.

ENGINEERING CORP.

GEOTECHNICAL INVESTIGATION

KEEGANS BAYOU WWTP IMPROVEMENTS
WBS NO. R-000265-0079-3
HOUSTON, TEXAS

1.0 INTRODUCTION

1.1 Project Description

This report presents the results of a geotechnical investigation performed by Aviles Engineering Corporation (AEC) for the proposed City of Houston (COH) Keegans Bayou Wastewater Treatment Plant (WWTP) Improvements, located at 9500 White Chapel Lane, in Houston, Texas (Houston/Harris County Key Map: 530S). A vicinity map is presented on Plate A-1 in Appendix A. According to Infrastructure Associates, the proposed improvements include: (i) a new 20 foot inner diameter grit chamber with perimeter wall that is 15 feet above grade plus a 6.5 foot deep pit; (ii) a new elevated structural slab adjacent to the grit chamber; and (iii) two new elevated concrete channels supported on piers.

1.2 Purpose and Scope

The purpose of this geotechnical investigation is to evaluate the subsurface soil and ground water conditions at the project site and to develop geotechnical engineering recommendations for design and construction of the grit chamber, elevated structural slab, and elevated concrete channels. The scope of this geotechnical investigation is summarized below:

1. Drilling and sampling one soil boring to 40 feet below existing grade;
2. Performing soil laboratory testing on selected soil samples;
3. Engineering analysis and recommendations for the grit chamber, including foundation type and depth, allowable bearing capacity, and lateral earth pressure parameters for pit wall design;
4. Engineering analyses and recommendations for the elevated structural slab and elevated concrete channels, including foundation type and depth, and allowable bearing capacity;
5. Construction recommendations for the grit chamber, elevated structural slab, and elevated concrete channels.

2.0 SUBSURFACE EXPLORATION

Subsurface conditions at the site were investigated by drilling one boring to a depth of 40 feet below existing grade at the proposed grit chamber location. Boring survey data is presented on the representative boring log.

The boring location is shown on the attached Boring Location Plan on Plate A-2, in Appendix A. The boring was drilled using a truck-mounted drill rig and advanced initially by dry auger method, then using wet rotary method once groundwater was encountered. Undisturbed samples of cohesive soils were obtained from the boring by pushing 3-inch diameter thin-wall, seamless steel Shelby tube samplers in accordance with ASTM D 1587. Strength of the cohesive soils was estimated in the field using a hand penetrometer. The undisturbed samples of cohesive soils were extruded mechanically from the core barrels in the field and wrapped in aluminum foil; all samples were sealed in plastic bags to reduce moisture loss and disturbance. The samples were then placed in core boxes and transported to the AEC laboratory for testing and further study. After completion of drilling, the boring was backfilled with bentonite chips. Details of the soils encountered in the boring are presented on Plate A-3, in Appendix A.

3.0 LABORATORY TESTING

Soil laboratory testing was performed by AEC personnel. Samples from the boring were examined and classified in the laboratory by a technician under supervision of a geotechnical engineer. Laboratory tests were performed on selected soil samples in order to evaluate the engineering properties of the foundation soils in accordance with applicable ASTM Standards. Atterberg limits, moisture contents, percent passing a No. 200 sieve, and dry unit weight tests were performed on representative samples to establish the index properties and confirm field classification of the subsurface soils. Strength properties of cohesive soils were estimated by means of Unconsolidated-Undrained (UU) triaxial tests performed on undisturbed samples. The test results are presented on their representative boring logs. A key to the boring logs, classification of soils for engineering purposes, terms used on boring logs, and reference ASTM Standards for laboratory testing are presented on Plates A-4 through A-7, in Appendix A.

4.0 SITE CONDITIONS

4.1 Subsurface Conditions

Soil Conditions: Based on Boring B-1, the subsurface soil conditions at the proposed grit chamber generally consist of approximately 2 feet of hard fat clay (CH) fill at the ground surface, underlain by stiff to hard fat/lean clay (CH/CL) to the boring termination depth of 40 feet below grade.

Soil Properties: Details of the soils encountered during drilling are presented on the representative boring log. The cohesive soils encountered in Boring B-1 have Liquid Limits (LL) ranging from 47 to 58 and Plasticity Indices (PI) ranging from 29 to 40. This indicates that the cohesive soils have high expansive potential. The cohesive soils encountered are classified as "CL" and "CH" type soils in accordance with ASTM D 2487. "CH" soils can undergo significant volume changes due to seasonal changes in moisture contents. "CL" soils with lower LL (less than 40) and PI (less than 20) generally do not undergo significant volume changes with changes in moisture content. However, "CL" soils with LL approaching 50 and PI greater than 20 essentially behave as "CH" soils and could undergo significant volume changes.

Groundwater: Groundwater was encountered at a depth of 30 feet during drilling and subsequently was observed at a depth of 21.8 feet approximately 15 minutes after the initial encounter in Boring B-1. Groundwater at the grit chamber site could be pressurized. The information in this report summarizes conditions found on the date the boring was drilled. However, it should be noted that our ground water observations are short term; ground water depths and subsurface soil moisture contents will vary with environmental variations such as frequency and magnitude of rainfall and the time of year when construction is in progress.

4.2 Hazardous Materials

We did not detect any visual evidence or odor indicating the presence of hazardous materials in the soil samples. However, AEC notes that the presence of potential hazardous material within the project area cannot be discounted based upon the very small and limited number of samples taken.

4.3 Subsurface Variations

It should be emphasized that: (i) at any given time, ground water depths can vary from location to location, and (ii) at any given location, ground water depths can change with time. Ground water depths will vary with seasonal rainfall and other climatic/environmental events. Subsurface conditions may vary away from and in between borings.

Clay soils in the Houston area typically have secondary features such as slickensides and contain sand/silt seams/lenses/layers/pockets. It should be noted that the information in the boring logs is based on 3-inch diameter soil samples which were generally continuously obtained at intervals of 2 feet from the ground surface to a depth of 20 feet, then at 5 foot intervals thereafter until the boring termination depth of 40 feet was reacted.

A detailed description of the soil secondary features may not have been obtained due to the small sample size and sampling interval between the samples. Therefore, while some of AEC's logs show the soil secondary features, it should not be assumed that the features are absent where not indicated on the logs.

5.0 ENGINEERING ANALYSIS AND RECOMMENDATIONS

According to Infrastructure Associates, the proposed improvements include: (i) a new 20 foot inner diameter grit chamber with perimeter wall that is 15 feet above grade plus a 6.5 foot deep pit; (ii) a new elevated structural slab adjacent to the grit chamber; and (iii) two new elevated concrete channels supported on piers.

5.1 Grit Chamber

Based on design drawings (dated August 1, 2014) provided by Infrastructure Associates, the new grit chamber will have an inner diameter of 20 feet, with a 1 foot thick perimeter concrete wall (i.e. outer diameter of 22 feet). The majority of the grit chamber is above ground, although there will also be a pit that extends approximately 6 feet below grade. Cement-stabilized sand will be used to partially support the upper chamber and also as backfill against the pit walls. The top of wall elevation of the grit chamber is at elevation +84.09 feet Mean Sea Level (MSL), the top of floor slab elevation of the upper chamber is at elevation +71.07 feet MSL, existing grade is at approximately elevation +68.00 feet MSL, and the top of the pit floor slab is at elevation +63.07 feet MSL. Boring B-1 is at elevation +68.20 feet MSL.

Structural loads for the grit chamber were provided by Infrastructure Associates. The total empty dead weight of the grit chamber is 380 kips. The total long term load is 655 kips (including 25 percent sustained live loads plus normal water level) and the total short term load is 800 kips (including 100 percent sustained live loads plus normal water level).

5.1.1 Mat Foundation

According to the design drawings, the top of the pit floor will be at elevation +63.07 feet MSL and will be supported on a 2 foot thick concrete mat foundation bearing at elevation +61.07 feet MSL.

Allowable Bearing Capacity: Based on Boring B-1 (surface elevation +68.20 feet MSL), a mat foundation founded at elevation +61.07 feet MSL can be designed for a net allowable bearing capacity of 2,700 psf for

sustained loads and 4,000 psf for total loads, based on a minimum factor of safety (FS) of 3 for sustained loads and 2 for total loads, whichever is critical should be used. The modulus of subgrade reaction for soils beneath the mat foundation can be taken as 75 pci.

Mat Settlement: A detailed settlement analysis of the grit chamber is beyond the scope of service of this report. However, since the grit chamber is partially below grade, the long-term consolidation settlement of the structure will be small, since the weight of the soils removed for the pit excavation will partially compensate the weight of the grit chamber structure and equipment.

5.1.2 Grit Chamber Pit

Lateral Earth Pressures: The magnitudes of the lateral earth pressures on the pit walls will depend on the type and density of the backfill, surcharge on the backfill, and hydrostatic pressure, if any. If the backfill is over-compacted or if highly plastic clays are placed behind the walls, the lateral earth pressure could exceed the vertical pressure. Based on the drawings, cement-stabilized sand will be used to backfill the pit excavation. Cement-stabilized sand should be in accordance with Section 02321 of the latest edition of the City of Houston Standard Construction Specifications (COHSCS).

Lateral pressure resulting from construction equipment, structural loads, or other surcharge on the top of the pit walls should be taken into account by adding the equivalent uniformly distributed surcharge to the design lateral pressure. Hydrostatic pressure should also be included in the design (while assuming the pit is drained). We recommend that at least 240 psf uniform surcharge pressure be considered for design of the walls.

According to the drawings, the pit walls will be cast-in-place reinforced concrete. As a result, the pit walls can be designed based on at-rest earth pressure. The at-rest earth pressure at depth z can be determined by Equation (1). The walls should consider short term and long term conditions, whichever condition is critical should be used for design. Lateral earth pressure parameters for the pit wall design are presented on Table 1. Based on the drawings, approximately 1 to 3 feet of cement-stabilized sand backfill will be placed around the pit perimeter. Since the amount of cement-stabilized sand backfill surrounding the pit walls is relatively small, AEC recommends that the in-situ soil parameters be used for pit wall design.

$$p_0 = (q_s + \gamma h_1 + \gamma' h_2)K_0 + \gamma_w h_2 \qquad \text{.....Equation (1)}$$

where, p_0 = at-rest earth pressure, psf.
q_s = uniform surcharge pressure, minimum 240 psf.
γ, γ' = wet and buoyant unit weights of soil, pcf.
h_1 = depth from ground surface to groundwater table, feet.
h_2 = $z-h_1$, depth from groundwater table to point under consideration, feet.
Z = depth below ground surface, feet.
K_0 = coefficient of at-rest earth pressure.
γ_w = unit weight of water, 62.4 pcf.

Table 1. Design Soil Parameters for Pit Walls (Based on Boring B-1)

Elevation (ft)	Soil Type	γ (pcf)	γ' (pcf)	Short-Term					Long-Term				
				C (psf)	φ (deg)	K_a	K_0	K_p	C' (psf)	φ' (deg)	K_a	K_0	K_p
N/A	Cement Stabilized Sand	120	58	0	30	0.33	0.70	3.00	0	30	0.33	0.70	3.00
68 to 66	Fill: hard CH	120	58	1500	0	1.00	1.00	1.00	150	16	0.57	0.72	1.76
66 to 58	Very stiff to hard CH	131	69	3000	0	1.00	1.00	1.00	300	16	0.57	0.72	1.76

Notes: (1) γ = unit weight for soil above water level, γ' = buoyant unit weight for soil below water level.
(2) C = ultimate cohesion, φ = ultimate angle of internal friction.
(3) K_a = coefficient of active earth pressure, K_0 = coefficient of at-rest earth pressure, K_p = coefficient of passive earth pressure, for level backfill.
(4) AEC recommends the use of FS = 2 for passive earth pressure if it is to be used in the design.

Hydrostatic Uplift Resistance: The pit should be designed to resist hydrostatic uplift. For uplift design of underground structures, we recommend that the water level be assumed to be at the ground surface (while assuming the pit is drained and empty). If the dead weights of the structure plus the skin friction resistance of the subgrade soils are inadequate to resist uplift forces, toe extensions of the mat foundation may be constructed so that the effective weight of the soil above the extended mat can be utilized to resist the uplift forces. The unit buoyant weight of concrete can be taken as 90 pcf. The minimum recommended factors of safety against uplift should be 1.1 for concrete weight, 1.5 for soil weight and 3.0 for soil friction. Design soil parameters for uplift design are included on Table 1 above. Recommended design criteria for uplift resistance are shown on Plate B-8, in Appendix B.

Pit Wall Backfill: If the pit excavation will be laid/stepped back, we recommend use of select fill as backfill behind the pit walls. The excavation area should extend a minimum of 2 feet horizontally beyond the mat foundation perimeter, then slope upwards at a H:V = 1:1 slope or flatter. Select fill criteria are presented in Section 5.3 of this report.

5.1.3 Pit Excavation

Cohesive soils in the Houston area contain many secondary features which affect excavation stability, including sand seams and slickensides. Slickensides are shiny weak failure planes which are commonly present in fat clays; such clays often fail along these weak planes when they are not laterally supported, such as in an open excavation. The Contractor should not assume that slickensides and sand seams/layers/pockets are absent where not indicated on the logs.

The Contractor should be responsible for designing, constructing and maintaining safe excavations. The excavations should not cause any distress to existing structures.

Excavations 20 feet and Deeper: OSHA requires that shoring or bracing for excavations 20 feet and deeper be specifically designed by a licensed professional engineer.

Excavations Less than 20 Feet Deep: Excavations that are less than 20 feet deep may be shored, sheeted and braced, or laid back to a stable slope for the safety of workers, the general public, and adjacent structures, except for excavations which are less than 5 feet deep and verified by a competent person to have no cave-in potential. The excavation should be in accordance with Occupational Safety and Health Administration (OSHA), Safety and Health Regulations, 29 CFR, Part 1926. Firm to hard clays should be considered OSHA Class "B" soils, while fill soils and granular soils should be considered OSHA Class "C" soils. Submerged soils should be classified as OSHA Class "C" soils, unless dewatering is conducted to lower the ground water level below the excavation bottom. Based on Boring B-1, the 2 feet of hard fat clay fill at the ground surface can be classified as OSHA Class "C", and below the fill, the very stiff to hard fat clay to a depth of 10 feet below grade can can be classified as OSHA Class "B".

Critical Height is defined as the height a slope will stand unsupported for a short time; in cohesive soils, it is used to estimate the maximum depth of open-cuts at given side slopes. Critical Height may be calculated based on the soil cohesion. Values for various slopes and cohesion are shown on Plate B-1, in Appendix B. Cautions listed below should be exercised in use of Critical Height applications:

1. No more than 50 percent of the Critical Height computed should be used for vertical slopes. Unsupported vertical slopes are not recommended where granular soils or soils that will slough when not laterally supported are encountered within the excavation depth.

2. If the soil at the surface is dry to the point where tension cracks occur, any water in the crack will increase the lateral pressure considerably. In addition, if tension cracks occur, no cohesion should be assumed for the soils within the depth of the crack. The depth of the first waler should not exceed the depth of the potential tension crack. Struts should be installed before lateral displacement occurs.

3. Shoring should be provided for excavations where limited space precludes adequate side slopes, e.g., where granular soils will not stand on stable slopes and/or for deep open cuts.

4. All excavation and shoring should be designed and constructed by qualified professionals in accordance with OSHA requirements.

Plate B-2, in Appendix B, presents the maximum (steepest) allowable slopes for OSHA Soil Types for excavations less than 20 feet.

If limited space is available for the required open cut side slopes, the space required for the slope can be reduced by using a combination of bracing and open cut as illustrated on Plate B-3, in Appendix B. Guidelines for bracing and calculating bracing stress are presented below.

Computation of Bracing Pressures: The following method can be used for calculating earth pressure against bracing for open cuts. Lateral pressure resulting from construction equipment, traffic loads, or other surcharge should be taken into account by adding the equivalent uniformly distributed surcharge to the design lateral pressure. Hydrostatic pressure, if any, should also be considered. The active earth pressure at depth z can be determined by Equation (2) below, the design soil parameters are presented on Table 1 in Section 5.1.2 of this report.

$$p_a = (q_s + rh_1 + r'h_2)K_a - 2c\sqrt{K_a} + r_w h_2 \qquad \text{.....Equation (2)}$$

where,
- p_a = active earth pressure, psf.
- K_a = coefficient of active earth pressure, see Table 1.
- c = cohesion of clayey soils, see Table 1, c can be omitted for design.
- q_s = uniform surcharge pressure, minimum 300 psf.
- γ, γ = wet and buoyant unit weights of soil, pcf, see Table 1.
- h_1 = depth from ground surface to groundwater table, feet.
- h_2 = $z-h_1$, depth from groundwater table to point under consideration, feet.
- z = depth below ground surface, feet.
- γ_w = unit weight of water, 62.4 pcf.

Pressure distribution for the practical design of struts in open cuts for clays and sands are illustrated on Plates B-4 through B-6, in Appendix B.

Bottom Stability: In open-cuts, it is necessary to consider the possibility of the bottom failing by heaving, due to the removal of the weight of excavated soil. Heaving typically occurs in soft plastic clays when the excavation depth is sufficiently deep enough to cause the surrounding soil to displace vertically due to bearing capacity failure of the soil beneath the excavation bottom, with a corresponding upward movement of the soils in the bottom of the excavation.

In fat and lean clays, heave normally does not occur unless the ratio of Critical Height to Depth of Cut approaches one. In very sandy and silty lean clays and granular soils, heave can occur if an artificially large head of water is created due to installation of impervious sheeting while bracing the cut. This can be mitigated if ground water is lowered below the excavation by dewatering the area. Guidelines for evaluating bottom stability in clay soils are presented on Plate B-7, in Appendix B.

If the excavation extends below ground water, and the soils at or near the bottom of the excavation are mainly sands or silts, the bottom can fail by blow-out (boiling) when a sufficient hydraulic head exists. The potential for boiling or in-flow of granular soils increases where the ground water is pressurized. To reduce the potential for boiling of excavations terminating in granular soils below pressurized ground water, the ground water table should be lowered at least 3 feet below the excavation bottom.

Calcareous nodules and slickensides within cohesive soil strata were encountered in our borings. These secondary structures may become sources of localized instability when they are exposed during excavation, especially when they become saturated. Such soils have a tendency to slough or cave in when not laterally confined, such as in trench excavations. The Contractor should be aware of the potential for cave-in of the soils. Low plasticity soils (silts and clayey silts) will lose strength and may behave like granular soils when saturated.

Protection of Excavation Walls and Bottom: We recommend that the exposed walls of the pit foundation excavations be covered by a polyethylene membrane. The excavation bottom must also be protected to prevent loss of moisture. We recommend that the exposed subgrade of the foundation excavation be covered by a minimum 2-inch thick lean concrete seal slab if the mat foundation will not be poured within 24 hours. Central to this recommendation is the importance of preserving the moisture regime of the subsurface soils, in order to minimize the shrink/swell potential of the high plasticity fat clays at the site.

5.2 Elevated Structural Slab and Influent/Effluent Channels

Infrastructure Associates's drawings indicate that the existing elevated structural slab and elevated influent/effluent channels are supported on drilled-and-underreamed footings, placed at approximately 10 feet below typical grade. The drawings indicate that typical grade is at an approximate elevation of +68.00 feet MSL, and that the footings are founded approximately at an elevation of +56.59 feet MSL. The existing elevated structural slab and elevated channels are at an elevation of approximately +75.65 to +76.65 feet MSL.

Structural loads for the influent and effluent channels were provided by Infrastructure Associates. The total empty dead weight is 26 kips per footing. The total long term load is 40 kips per footing (including 25 percent sustained live loads plus normal water level) and the total short term load is 50 kips per footing (including 100 percent sustained live loads plus normal water level).

Based on the highly expansive clay soils encountered in Boring B-1, AEC recommends that the new elevated structural slab and elevated concrete channels also be supported on drilled-and-underreamed footings, founded at a depth below the zone of seasonal moisture variation (typically 10 feet below grade in the Houston area). AEC recommends that the new drilled footings be founded at an elevation that matches the existing footing elevation.

5.2.1 Drilled-and-Underreamed Footings

Allowable Bearing Capacity: Based on Boring B-1 (surface elevation +68.20 feet MSL), drilled-and-underreamed footings founded at approximately 11.6 feet below existing grade (at an elevation of +56.60 feet MSL) should be designed for a net allowable bearing capacity of 3,800 psf for sustained loads and 5,700 psf for total loads, based on a minimum FS of 3 for sustained loads and 2 for total loads; whichever is critical should be used for design.

Vertical Reinforcement: To withstand uplift forces resulting from the shrink/swell movements of clay soils in the moisture active zone, each footing should contain reinforcing steel throughout its full length to sustain an uplift load of at least 60d kips, where "d" is the diameter of the shaft in feet.

Footing Spacing: To reduce stress overlap from adjacent footings and potential construction problems, the minimum edge-to-edge clear spacing between the underreams should not be less than 0.6 x diameter of the larger underream. New foundations should be spaced to reduce the potential of new foundations affecting existing foundations or the pit foundation (and vice versa) by placing the new foundations outside the bearing (stress) zone of existing foundations. The bearing (stress) zone can be defined by a line drawn downward from the outer edge of the existing foundation and inclined at an angle of 45 degrees to the vertical.

Footing Settlements: Based on the soil conditions encountered, we estimate that drilled-and-underreamed footings, designed and constructed as recommended in this report, will experience total settlements on the order of 1 inch.

Drilled-and-Underreamed Footing Construction: Drilled-and-underreamed footings should be constructed in accordance with Section 02465 of the latest edition of the COHSCS. A qualified geotechnical technician should check each footing excavation prior to placing concrete to insure that:

1) The footing has been constructed to the specified dimensions at the recommended depth and founded in the correct formation as indicated in this report;
2) The column is concentric with the pier cap/grade beam and drilled footing; and
3) Excessive cuttings, any soft or compressible materials, and ponded water are removed from the bottom of the excavation.

There is a possibility that slickensides and/or pockets/seams of sands/silts within the clay soils may make underreaming (belling) difficult, and result in potential sloughing or caving-in of the shaft excavation sidewalls during construction, particularly for underreams over 6 feet in diameter. We recommend that a maximum diameter ratio of bell to shaft not exceed 2.5 to 1. Although the groundwater level encountered in Boring B-1 are below the anticipated footing depth, the site's groundwater level will fluctuate with seasonal rainfall and other climatic events, and may be higher at the time of construction. If ground water is encountered within the cohesive soils during construction, sump pumps may be used to pump water out from the excavations and soft sediments should be removed. However, if significant sloughing or caving occurs during shaft excavation, further excavation should be stopped and a reduced bell/shaft ratio or even straight-sided shafts (matching the bell diameter) in combination with bentonite slurry and/or temporary casing may be necessary.

Placement of concrete should be accomplished immediately after excavation is completed to reduce potential for sloughing of the foundation soils. Footing excavations should not be left open overnight. No concrete should be placed without the prior approval of the Owner's Representative. New drilled footings should not be excavated within 2 bell diameters (edge to edge) of an open footing excavation, or one in which concrete has been placed in

the preceding 24 hours, to prevent movement of fresh concrete from the recently filled footing to an adjacent unfilled footing.

5.3 Select Fill

Select fill should consist of uniform, non-active inorganic lean clays with a PI between 10 and 20 percent, and more than 50 percent passing a No. 200 sieve. Excavated material delivered to the site for use as select fill shall not have clay clods with PI greater than 20, clay clods greater than 2 inches in diameter, or contain sands/silts with PI less than 10. Prior to construction, the Contractor should determine if he or she can obtain qualified select fill meeting the above select fill criteria.

As an alternative to imported fill, on-site soils excavated during construction can be stabilized with a minimum of 7 percent hydrated lime (by dry soil weight). Lime stabilization should be performed in general accordance with Section 02336 of the latest edition of the COHSCS. AEC prefers using stabilized on-site clay as select fill since compacted lime-stabilized clay generally has high shear strength, low compressibility, and relatively low permeability. Blended or mixed soils (sand and clay) should not be used as select fill.

All imported material intended for use as select fill should be tested prior to use to confirm that it meets select fill criteria. Select fill should be placed in loose lifts not exceeding 8 inches in thickness. Backfill within 3 feet of walls or columns should be placed in loose lifts no more than 4-inches thick and compacted using hand tampers, or small self-propelled compactors. The select fill should be compacted to a minimum of 95 percent of the ASTM D 698 (Standard Proctor) maximum dry unit weight at a moisture content ranging between optimum and 3 percent above optimum.

At least one Atterberg Limits and one percent passing a No. 200 sieve test shall be performed for each 5,000 square feet (sf) of placed fill, per lift (with a minimum of one set of tests per lift), to determine whether it meets select fill requirements. Prior to placement of concrete, the moisture contents of the top 2 lifts of compacted select fill shall be re-tested (if there is an extended period of time between fill placement and pavement construction) to determine if the in-place moisture content of the lifts have been maintained at the required moisture requirements.

6.0 CONSTRUCTION CONSIDERATIONS

6.1 Site Preparation and Grading

To mitigate site problems that may develop following prolonged periods of rainfall, it is essential to have adequate drainage to maintain a relatively dry and firm surface prior to starting any work at the site. Adequate drainage should be maintained throughout the construction period. Methods for controlling surface runoff and ponding include proper site grading, berm construction around exposed areas, and installation of sump pits with pumps.

6.2 Groundwater Control

The need for groundwater control will depend on the depth of excavation relative to the groundwater depth at the time of construction. In the event that there is heavy rain prior to or during construction, the groundwater table may be higher than indicated in this report; higher seepage is also likely and may require a more extensive groundwater control program. In addition, groundwater may be pressurized in certain areas of the site, requiring further evaluation and consideration of the excess hydrostatic pressures.

The Contractor should be responsible for selecting, designing, constructing, maintaining, and monitoring a groundwater control system and adapt his operations to ensure the stability of the excavations. Groundwater information presented in Section 4.1 of this report, along with consideration for potential environmental and site variation between the time of our field exploration and construction, should be incorporated in evaluating groundwater depths. The following recommendations are intended to guide the Contractor during design and construction of the dewatering system.

In cohesive soils seepage rates are lower than in granular soils and groundwater is usually collected in sumps and channeled by gravity flow to storm sewers. If cohesive soils contain significant secondary features, seepage rates will be higher. This may require larger sumps and drainage channels, or if significant granular layers are interbedded within the cohesive soils, methods used for granular soils may be required. Where it is present, pressurized groundwater will also yield higher seepage rates.

Groundwater for excavations within saturated sands can be controlled by the installation of wellpoints. The practical maximum dewatering depth for well points is about 15 feet. When groundwater control is required

below 15 feet, multiple staged wellpoint or deep wells with submersible pumps have generally proved successful. Generally, the groundwater depth should be lowered at least 3 feet below the excavation bottom to be able to work on a firm surface when water-bearing granular soils are encountered.

Extended and/or excessive dewatering can result in settlement of existing structures in the vicinity; the Contractor should take the necessary precautions to minimize the effect on existing structures in the vicinity of the dewatering operation. We recommend that the Contractor verify the groundwater depths and seepage rates prior to and during construction and retain the services of a dewatering expert (if necessary) to assist him in identifying, implementing, and monitoring the most suitable and cost-effective method of controlling groundwater.

For open cut construction in cohesive soils, the possibility of bottom heave must be considered due to the removal of the weight of excavated soil. In lean and fat clays, heave normally does not occur unless the ratio of Critical Height to Depth of Cut approaches one. In silty clays, heave does not typically occur unless an artificially large head of water is created through the use of impervious sheeting in bracing the cut. Guidelines for evaluating bottom stability are presented in Section 5.1.3 of this report.

6.3 Construction Monitoring

Site preparation (including clearing and proof-rolling), earthwork operations, foundation construction, and subgrade preparation should be monitored by qualified geotechnical professionals to check for compliance with project documents and changed conditions, if encountered.

6.4 Monitoring of Existing Structures

Existing structures in the vicinity of the project area should be closely monitored prior to, during, and for a period after excavation. Several factors (including soil type and stratification, construction methods, weather conditions, other construction in the vicinity, construction personnel experience, and supervision) may impact ground movement in the vicinity of the site. We therefore recommend that the Contractor be required to survey and adequately document the condition of existing structures in the vicinity of the project area.

7.0 GENERAL

AEC should be allowed to review construction documents and specifications prior to release to check that the geotechnical recommendations and design criteria presented herein are properly interpreted. The information contained in this report summarizes conditions found on the date the boring was drilled. The attached boring logs are true representations of the soils encountered at the specific boring locations on the date of drilling. Due to variations encountered in the subsurface conditions across the site, changes in soil conditions from those presented in this report should be anticipated. AEC should be notified immediately when conditions encountered during construction are significantly different from those presented in this report.

8.0 LIMITATIONS

The investigation was performed using the standard level of care and diligence normally practiced by recognized geotechnical engineering firms in this area, presently performing similar services under similar circumstances. The report has been prepared exclusively for the project and location described in this report, and is intended to be used in its entirety. If pertinent project details change or otherwise differ from those described herein, AEC should be notified immediately and retained to evaluate the effect of the changes on the recommendations presented in this report, and revise the recommendations if necessary. The scope of services does not include a fault investigation. The recommendations presented in this report should not be used for other structures located at this site or similar structures located at other sites, without additional evaluation and/or investigation.

AVILES ENGINEERING CORP.

APPENDIX A

Plate A-1	Vicinity Map
Plate A-2	Boring Location Plan
Plate A-3	Boring Logs
Plate A-4	Key to Symbols
Plate A-5	Classification of Soils for Engineering Purposes
Plate A-6	Terms Used on Boring Logs
Plate A-7	ASTM & TXDOT Designation for Soil Laboratory Tests

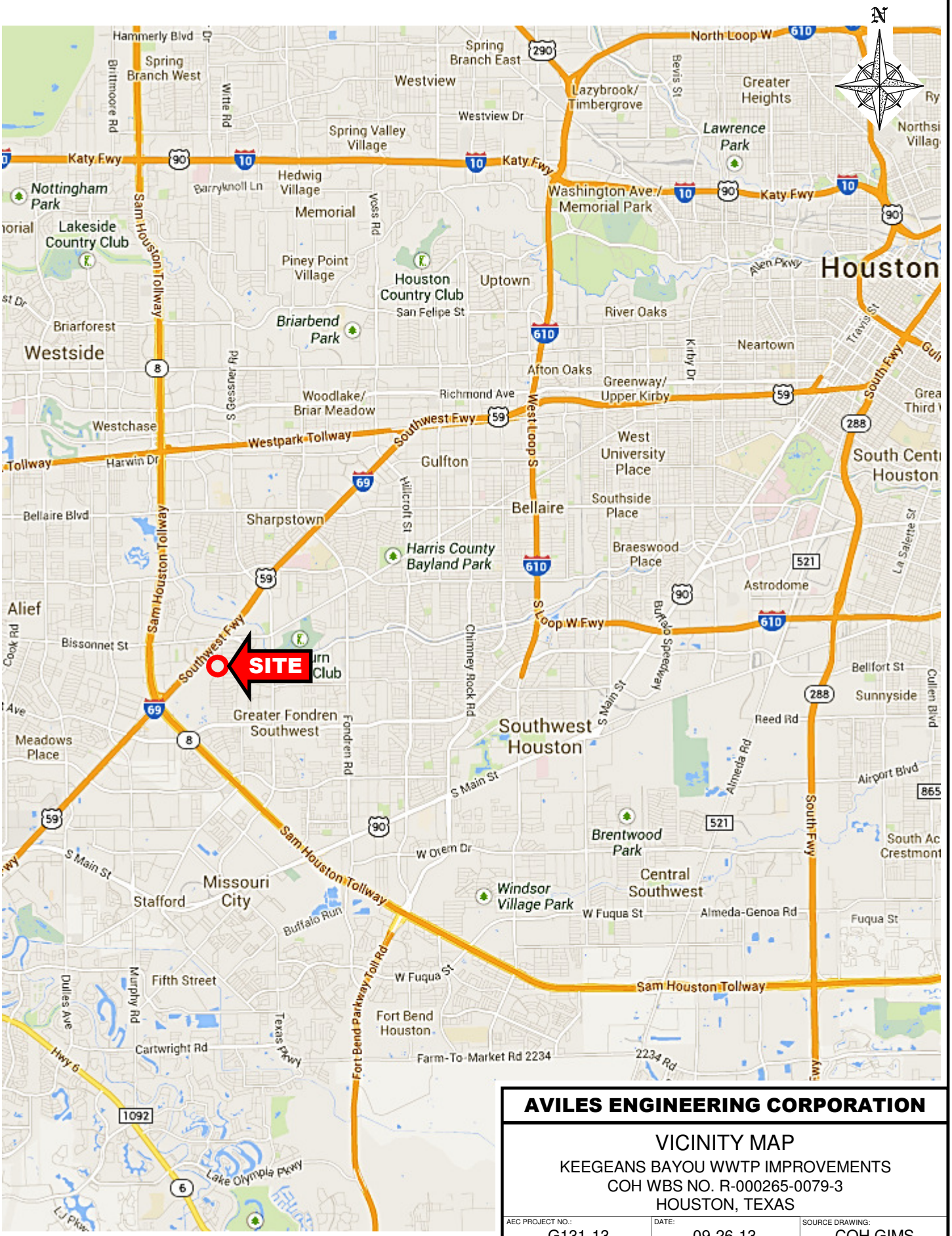

AVILES ENGINEERING CORPORATION

VICINITY MAP

KEEGEANS BAYOU WWTP IMPROVEMENTS
COH WBS NO. R-000265-0079-3
HOUSTON, TEXAS

AEC PROJECT NO.:	DATE:	SOURCE DRAWING:
G131-13	09-26-13	COH GIMS
APPROX. SCALE:	DRAFTED BY:	PLATE NO.:
N.T.S.	BpJ	PLATE A-1

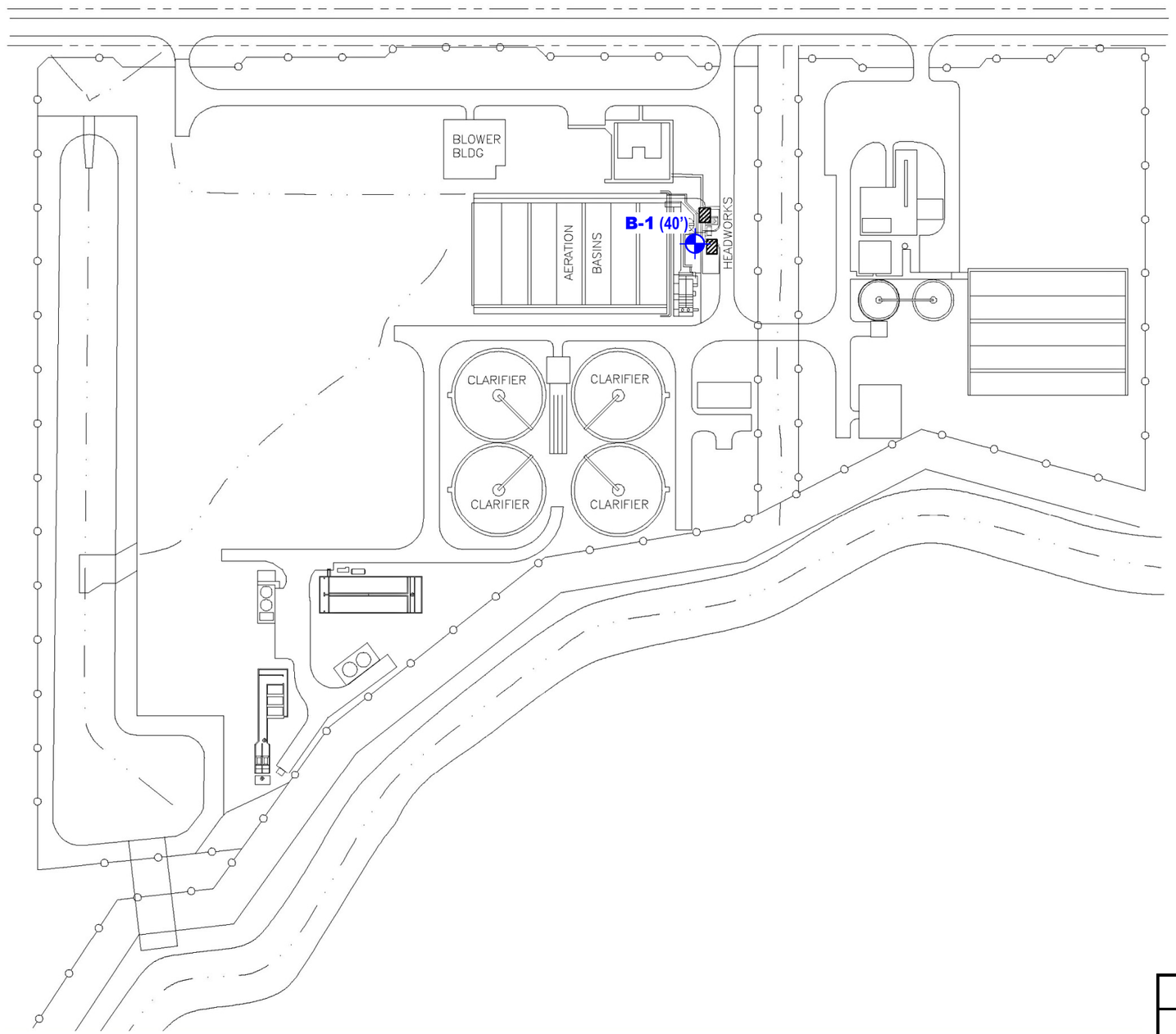

AVILES ENGINEERING CORPORATION

BORING LOCATION PLAN

KEEGEANS BAYOU WWTP IMPROVEMENTS
COH WBS NO. R-000265-0079-3
HOUSTON, TEXAS

AEC PROJECT NO.:	DATE:	SOURCE DRAWING PROVIDED BY:
G131-13	09-26-13	INFRASTRUCTURE ASSOC.
APPROX. SCALE:	DRAFTED BY:	PLATE NO.:
1" = 200'	BpJ	PLATE A-2

AVILES ENGINEERING CORP. GEOTECHNICAL ENGINEERS

PROJECT: **Keegans Bayou WWTP Improvements** BORING **B-1**

DATE **6/7/13** TYPE **4" Dry Auger / Wet Rotary** LOCATION **See Boring Location Plan**

DESCRIPTION
Survey Coordinates (TSPC, Surface):
Easting: 3066643.29
Northing: 13808992.43
Elevation: 68.20
WBS No. R-000265-0079-3

ELEVATION IN FEET	DEPTH IN FEET	DESCRIPTION	-200 MESH	DRY DENSITY, PCF	MOISTURE CONTENT, %	LIQUID LIMIT	PLASTIC LIMIT	PLASTICITY INDEX
	0	Fill: hard, dark gray Fat Clay w/Sand (CH), with calcareous nodules, sand pockets, shell, roots, and ferrous stains	71		12	51	16	35
66		Very stiff, dark gray Fat Clay (CH)			21			
	6	Hard, dark gray and gray Fat Clay w/Sand (CH), with calcareous nodules, siltstone fragments, and ferrous stains		113	16			
		-with sand pockets 6'-8'	76		17	58	18	40
60		-tan and light gray, with abundant calcareous nodules 6'-10'			21			
	12	Stiff to very stiff, reddish brown and light gray Fat Clay (CH), with slickensides, silt pockets, and calcareous nodules		94	27			
54		Very stiff, light gray and tan Fat Clay (CH), with sand pockets and ferrous stains	86		21	52	17	35
		Very stiff to hard, light gray and tan Lean Clay w/Sand (CL), with sand partings, calcareous nodules, and ferrous stains			17			
	18			109	18			
48			82		16	47	18	29
	24			123	14			
42		Hard, light gray and tan Lean Clay (CL), with slickensides and sand partings	91		16	48	14	34
	30							
36		Stiff to hard, reddish brown and light gray Fat Clay (CH), with slickensides		105	24			
	36							
30		-with calcareous nodules and siltstone fragments 38'-40'						
		Termination depth = 40 feet.						
	42							

SHEAR STRENGTH, TSF

△ Confined Compression
● Unconfined Compression
○ Pocket Penetrometer
□ Torvane

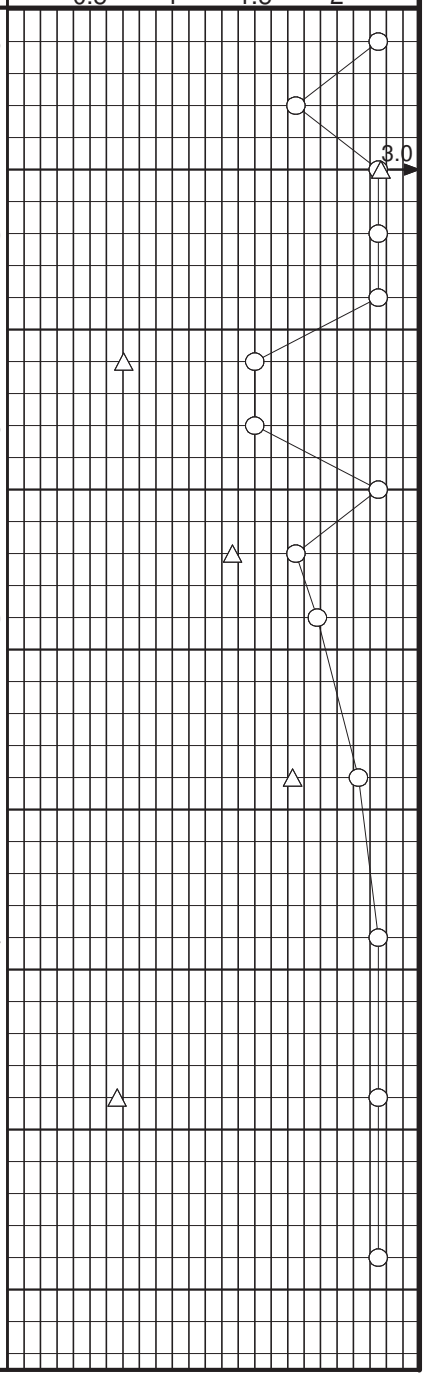

BORING DRILLED TO **30** FEET WITHOUT DRILLING FLUID
WATER ENCOUNTERED AT **30** FEET WHILE DRILLING
WATER LEVEL AT **21.8** FEET AFTER **15 MIN.**
DRILLED BY **V&S** DRAFTED BY LOGGED BY **BpJ**

KEY TO SYMBOLS

Symbol	Description
Strata symbols	
	Fill
	High plasticity clay
	Low plasticity clay
Misc. Symbols	
	Water table depth during drilling
	Subsequent water table depth
○	Pocket Penetrometer
△	Confined Compression
Soil Samplers	
■	Undisturbed thin wall Shelby tube

AYLES ENGINEERING CORP.

CLASSIFICATION OF SOILS FOR ENGINEERING PURPOSES

ASTM Designation D-2487

MAJOR DIVISIONS				GROUP SYMBOL	TYPICAL NAMES
COARSE-GRAINED SOILS (Less than 50% passes No. 200 sieve)	GRAVELS (Less than 50% of coarse fraction passes No. 4 sieve)	CLEAN GRAVELS (Less than 5% passes No. 200 sieve)		GW	Well-graded gravel, well-graded gravel with sand
				GP	Poorly-graded gravel, poorly-graded gravel with sand
		GRAVELS WITH FINES (More than 12% passes No. 200 sieve)	Limits plot below "A" line & hatched zone on plasticity chart	GM	Silty gravel, silty gravel with sand
			Limits plot above "A" line & hatched zone on plasticity chart	GC	Clayey gravel, clayey gravel with sand
	SANDS (50% or more of coarse fraction passes No. 4 sieve)	CLEAN SANDS (Less than 5% passes No. 200 sieve)		SW	Well-graded sand, well-graded sand with gravel
				SP	Poorly-graded sand, poorly-graded sand with gravel
		SANDS WITH FINES (More than 12% passes No. 200 sieve)	Limits plot below "A" line & hatched zone on plasticity chart	SM	Silty sand, silty sand with gravel
			Limits plot above "A" line & hatched zone on plasticity chart	SC	Clayey sand, clayey sand with gravel
FINE-GRAINED SOILS (50% or more passes No. 200 sieve)		SILTS AND CLAYS (Liquid Limit Less Than 50%)		ML	Silt, silt with sand, silt with gravel, sandy silt, gravelly silt
				CL	Lean clay, lean clay with sand, lean clay with gravel, sandy lean clay, gravelly lean clay
				OL	Organic clay, organic clay with sand, sandy organic clay, organic silt, sandy organic silt
		SILTS AND CLAYS (Liquid Limit 50% or More)		MH	Elastic silt, elastic silt with sand, sandy elastic silt, gravelly elastic silt
				CH	Fat clay, fat clay with sand, fat clay with gravel, sandy fat clay, gravelly fat clay
				OH	Organic clay, organic clay with sand, sandy organic clay, organic silt, sandy organic silt

NOTE: Coarse soils between 5% and 12% passing the No. 200 sieve and fine-grained soils with limits plotting in the hatched zone of the plasticity chart are to have dual symbols.

PLASTICITY CHART

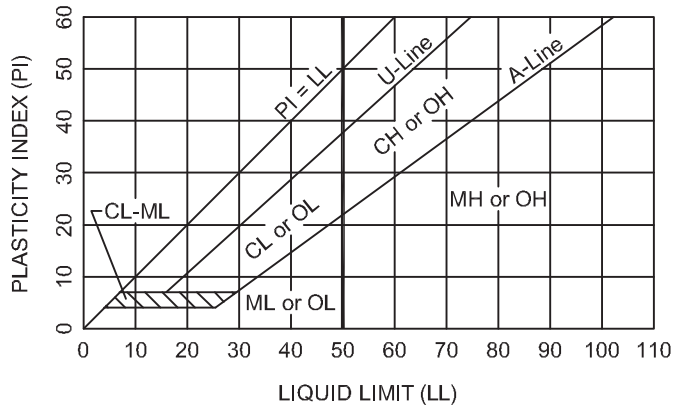

Equation of A-Line: Horizontal at PI=4 to LL=25.5, then PI=0.73(LL-20)

Equation of U-Line: Vertical at LL=16 to PI=7, then PI=0.9(LL-8)

DEGREE OF PLASTICITY OF COHESIVE SOILS

Degree of Plasticity	Plasticity Index
None	0 - 4
Slight	5 - 10
Medium	11 - 20
High	21 - 40
Very High	>40

SOIL SYMBOLS

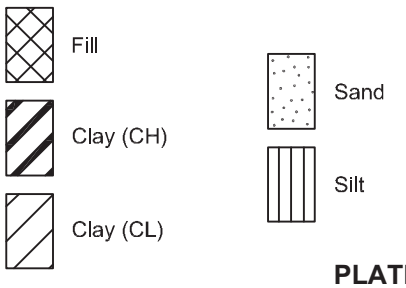

PLATE A-5

AYLES ENGINEERING CORP.

TERMS USED ON BORING LOGS

SOIL GRAIN SIZE

U.S. STANDARD SIEVE

6"	3"	3/4"	#4	#10	#40	#200

BOULDERS	COBBLES	GRAVEL		SAND			SILT	CLAY
		COARSE	FINE	COARSE	MEDIUM	FINE		

152	76.2	19.1	4.76	2.00	0.420	0.074	0.002

SOIL GRAIN SIZE IN MILLIMETERS

STRENGTH OF COHESIVE SOILS

Consistency	Undrained Shear Strength, Kips per Sq. ft.
Very Soft	less than 0.25
Soft	0.25 to 0.50
Firm	0.50 to 1.00
Stiff	1.00 to 2.00
Very Stiff	2.00 to 4.00
Hard	greater than 4.00

RELATIVE DENSITY OF COHESIONLESS SOILS FROM STANDARD PENETRATION TEST

Very Loose	<4 bpf
Loose	5-10 bpf
Medium Dense	11-30 bpf
Dense	31-50 bpf
Very Dense	>50 bpf

SPLIT-BARREL SAMPLER DRIVING RECORD

Blows per Foot	Description
25	25 blows driving sampler 12 inches, after initial 6 inches of seating.
50/7"	50 blows driving sampler 7 inches, after initial 6 inches of seating.
Ref/3"	50 blows driving sampler 3 inches, during initial 6-inches seating interval.

NOTE: To avoid change to sampling tools, driving is limited to 50 blows during or after seating interval.

DRY STRENGTH ASTM D2488

None	Dry specimen crumbles into powder with mere pressure of handling
Low	Dry specimen crumbles into powder with some finger pressure
Medium	Dry specimen breaks into pieces or crumbles with considerable pressure
High	Dry specimen cannot be broken with finger pressure, it can be broken between thumb and hard surface
Very High	Dry specimen cannot be broken between thumb and hard surface

MOISTURE CONDITION ASTM D2488

Dry	Absence of moisture, dusty, dry to the touch
Moist	Damp but no visible water
Wet	Visible free water

SOIL STRUCTURE

Slickensided	Having planes of weakness that appear slick and glossy. The degree of slickensidedness depends upon the spacing of slickensides and the easiness of breaking along these planes.
Fissured	Containing shrinkage or relief cracks, often filled with fine sand or silt; usually more or less vertical.
Pocket	Inclusion of material of different texture that is smaller than the diameter of the sample.
Parting	Inclusion less than 1/8 inch thick extending through the sample.
Seam	Inclusion 1/8 inch to 3 inches thick extending through the sample.
Layer	Inclusion greater than 3 inches thick extending through the sample.
Laminated	Soil sample composed of alternating partings or seams of different soil types.
Interlayered	Soil sample composed of alternating layers of different soil types.
Intermixed	Soil sample composed of pockets of different soil types and layered or laminated structure is not evident.
Calcareous	Having appreciable quantities of calcium material.

ASTM & TXDOT DESIGNATION FOR SOIL LABORATORY TESTS

NAME OF TEST	ASTM TEST DESIGNATION	TXDOT TEST DESIGNATION
Moisture Content	D 2216	Tex-103-E
Specific Gravity	D 854	Tex-108-E
Sieve Analysis	D 421 D 422	Tex-110-E (Part 1)
Hydrometer Analysis	D 422	Tex-110-E (Part 2)
Minus No. 200 Sieve	D 1140	Tex-111-E
Liquid Limit	D 4318	Tex-104-E
Plastic Limit	D 4318	Tex-105-E
Shrinkage Limit	D 427	Tex-107-E
Standard Proctor Compaction	D 698	Tex-114-E
Modified Proctor Compaction	D 1557	Tex-113-E
Permeability (constant head)	D 2434	-
Consolidation	D 2435	-
Direct Shear	D 3080	-
Unconfined Compression	D 2166	-
Unconsolidated-Undrained Triaxial	D 2850	Tex-118-E
Consolidated-Undrained Triaxial	D 4767	Tex-131-E
Pinhole Test	D 4647	-
California Bearing Ratio	D 1883	-
Unified Soil Classification System	D 2487	Tex-142-E

AVILES ENGINEERING CORP.

APPENDIX B

Plate B-1	Critical Heights of Cuts in Nonfissured Clays
Plate B-2	Maximum Allowable Slopes
Plate B-3	A Combination of Bracing and Open Cuts
Plate B-4	Lateral Pressure Diagrams for Open Cuts in Cohesive Soil-Long Term Conditions
Plate B-5	Lateral Pressure Diagrams for Open Cuts in Cohesive Soil-Short Term Conditions
Plate B-6	Lateral Pressure Diagrams for Open Cuts in Sand
Plate B-7	Bottom Stability for Braced Excavation in Clay
Plate B-8	Buoyant Uplift Design

AYLES ENGINEERING CORP.

Critical Heights of Cut Slopes in Nonfissured Clays

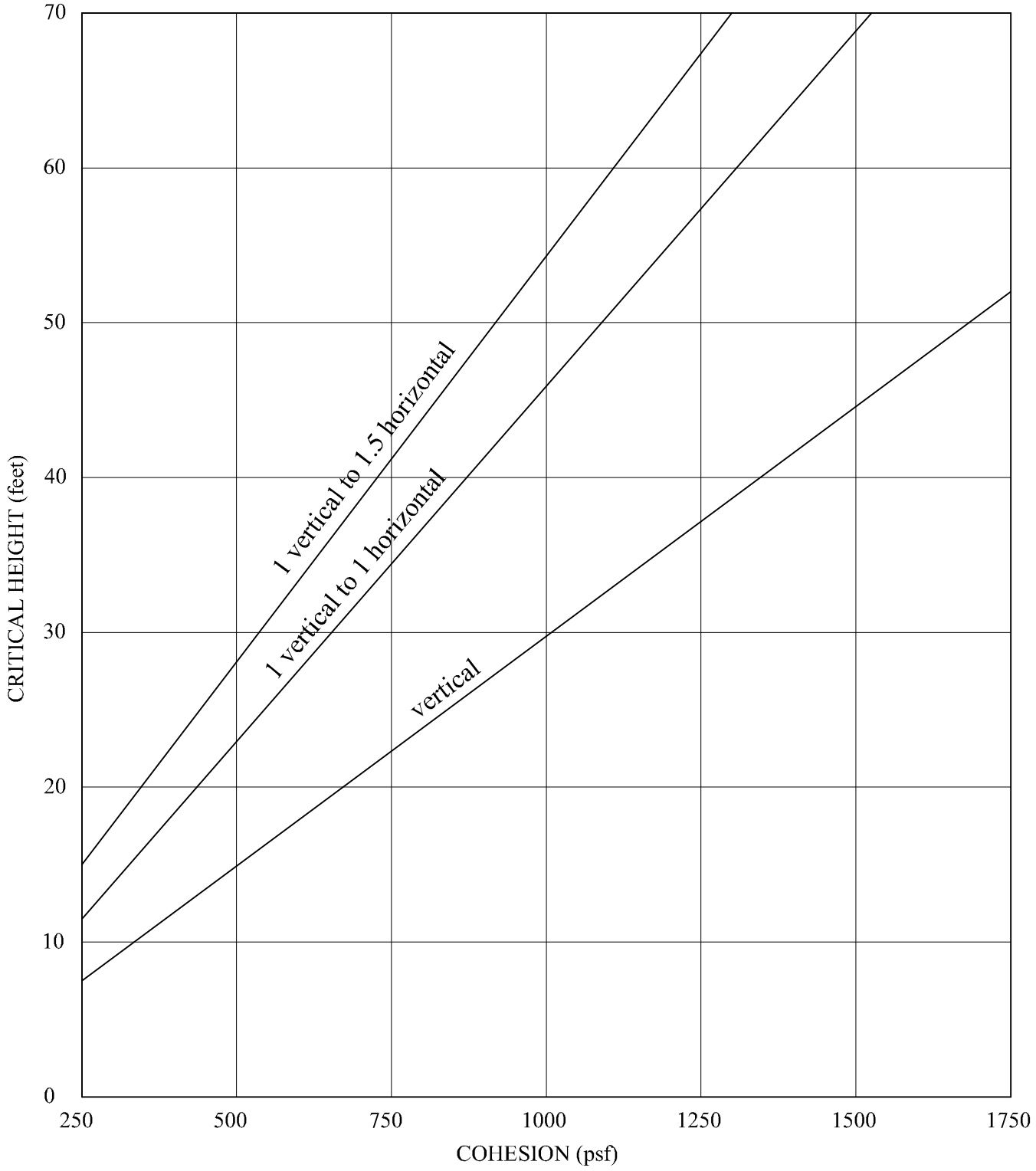

Note: The charts are calculated based on NAVFAC DM7.1, Page 7.1-319, assuming the critical circles are toe circles, and wet unit weight of soils = 125pcf.

AYLES ENGINEERING CORP.

MAXIMUM ALLOWABLE SLOPES

	SHORT TERM	LONG TERM
TYPE A SOILS	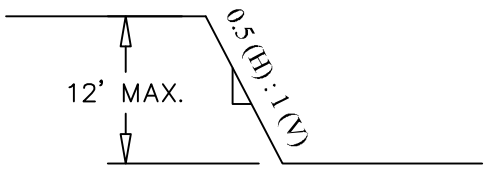	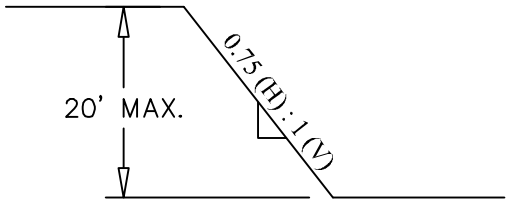
TYPE B SOILS	N/A	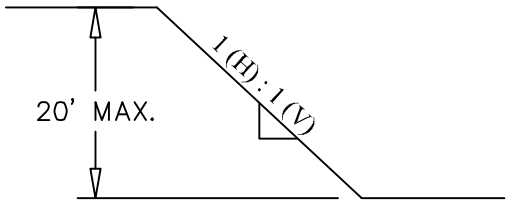
TYPE C SOILS	N/A	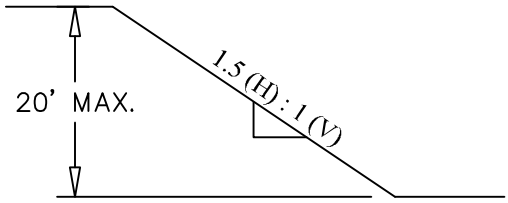

NOTES:

(1) For Type A soils, a short term maximum allowable slope of 0.5 (H) : 1 (V) is allowed in excavations that are 12 feet or less in depth; short term (24 hours or less) maximum allowable slopes for excavations greater than 12 feet in depth shall be 0.75 (H) : 1 (V).

(2) Maximum depth for above slopes is 20 feet. For slopes deeper than 20 feet, trench protection should be designed by the Contractor's professional engineer.

Reference: OSHA, Safety and Health Regulations for Construction, 1926 Subpart P.

AYLES ENGINEERING CORP.

A COMBINATION OF BRACING AND OPEN CUTS

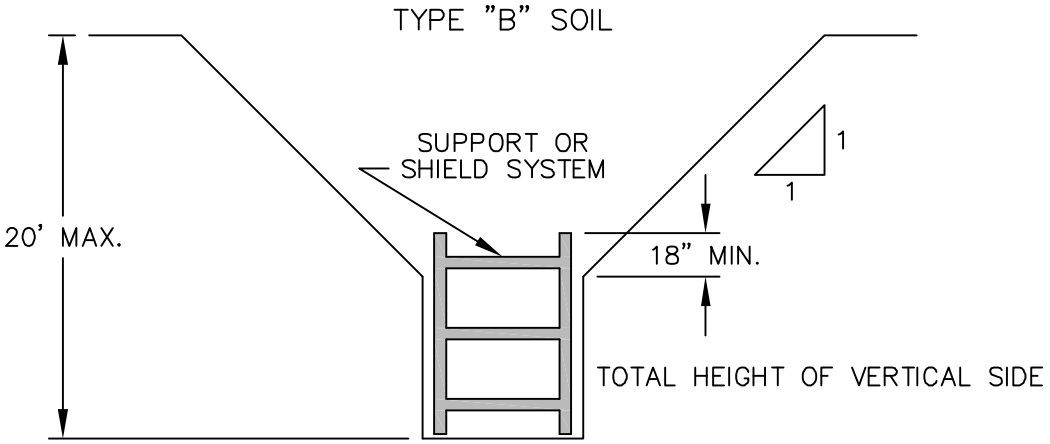

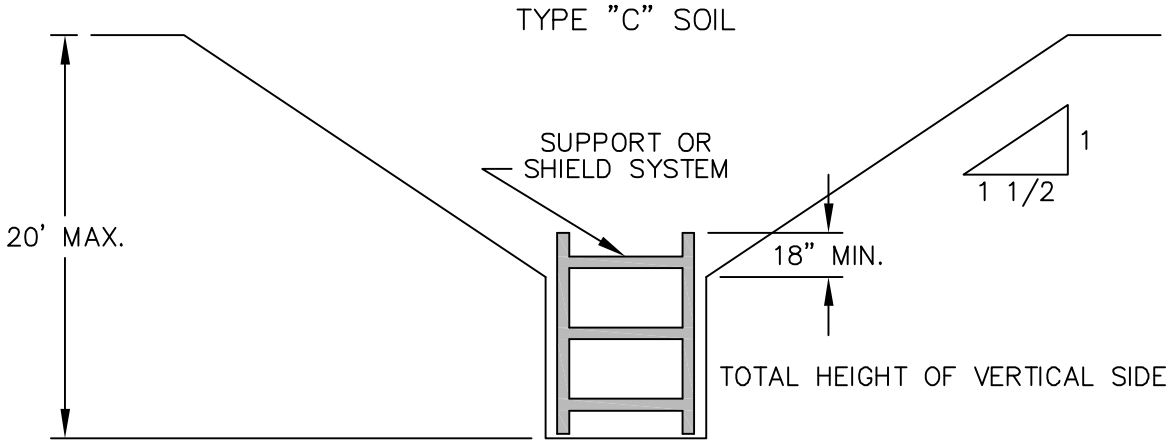

Reference: OSHA, Safety and Health Regulations for Construction, 1926 Subpart P.

AYLES ENGINEERING CORP.

LATERAL PRESSURE DIAGRAMS
FOR OPEN CUTS IN COHESIVE SOIL - LONG TERM CONDITIONS

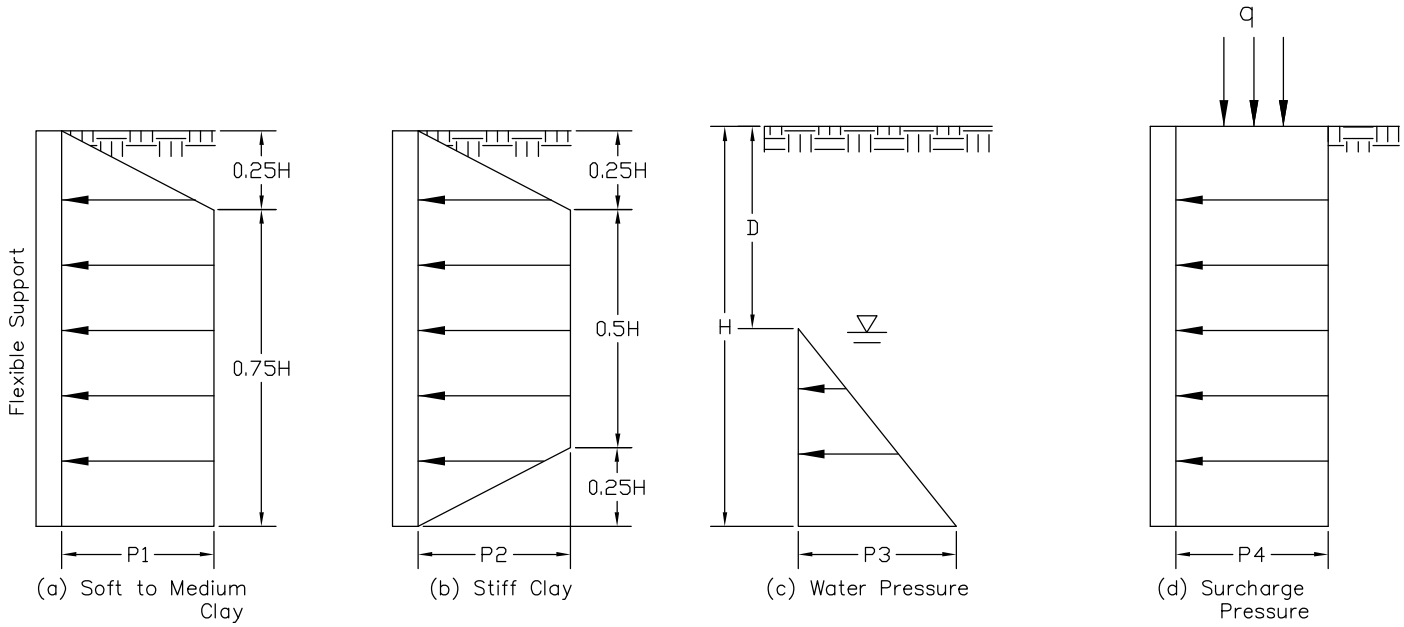

Empirical Pressure Distributions

Where:
H = Total excavation depth, feet
D = Depth to water table, feet
P1 = Lateral earth pressure = γH-4C, psf
P2 = Lateral earth pressure = 0.4γH, psf
P3 = Water pressure = γ_w (H-D), psf
P4 = Lateral earth pressure caused by surcharge = qK_a, psf
γ = Effective unit weight of soil, pcf
γ_w = Unit weight of water, pcf
C = Drained shear strength or cohesion, psf
K_a = Coefficient of active earth pressure

Notes:
1. All pressures are additive.
2. No safety factors are included.
3. For use only during long term construction.
4. If $\gamma H/C < 4$, use section (b),
   If $4 < \gamma H/C < 6$, use larger of section (a) or (b),
   If $\gamma H/C > 6$, use section (a).

Reference: Peck, R.B. (1969), "Deep Excavation and Tunneling in soft Ground", 7th ICSMFE, State of art volume, pp. 225-290.

ENGINEERING CORP.

LATERAL PRESSURE DIAGRAMS
FOR OPEN CUTS IN COHESIVE SOIL - SHORT TERM CONDITIONS

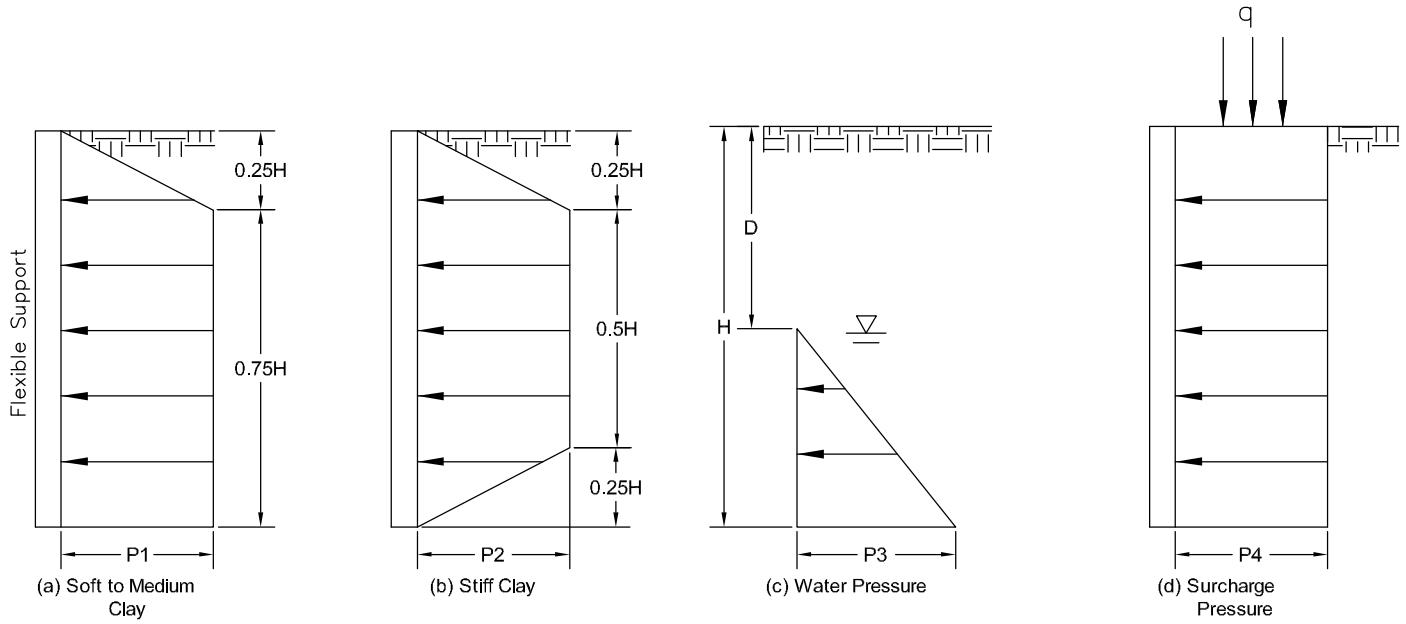

Empirical Pressure Distributions

Where:
H = Total excavation depth, feet
D = Depth to water table, feet
P1 = Lateral earth pressure = $\gamma H - 4S_u$, psf
P2 = Lateral earth pressure = $0.2\gamma H$, psf
P3 = Water pressure = γ_w (H-D), psf
P4 = Lateral earth pressure caused by surcharge = qK_a, psf
γ = Effective unit weight of soil, pcf
γ_w = Unit weight of water, pcf
S_u = Undrained shear strength = $q_u/2$, psf
q_u = Unconfined compressive strength, psf
K_a = Coefficient of active earth pressure

Notes:
1. All pressures are additive.
2. No safety factors are included.
3. For use only during short term construction.
4. If $\gamma H/S_u < 4$, use section (b),
   If $4 < \gamma H/S_u < 6$, use larger of section (a) or (b),
   If $\gamma H/S_u > 6$, use section (a).

Reference: Peck, R.B. (1969), "Deep Excavation and Tunneling in soft Ground", 7th ICSMFE, State of art volume, pp. 225-290.

AYLES ENGINEERING CORP.

LATERAL PRESSURE DIAGRAMS
FOR OPEN CUTS IN SAND

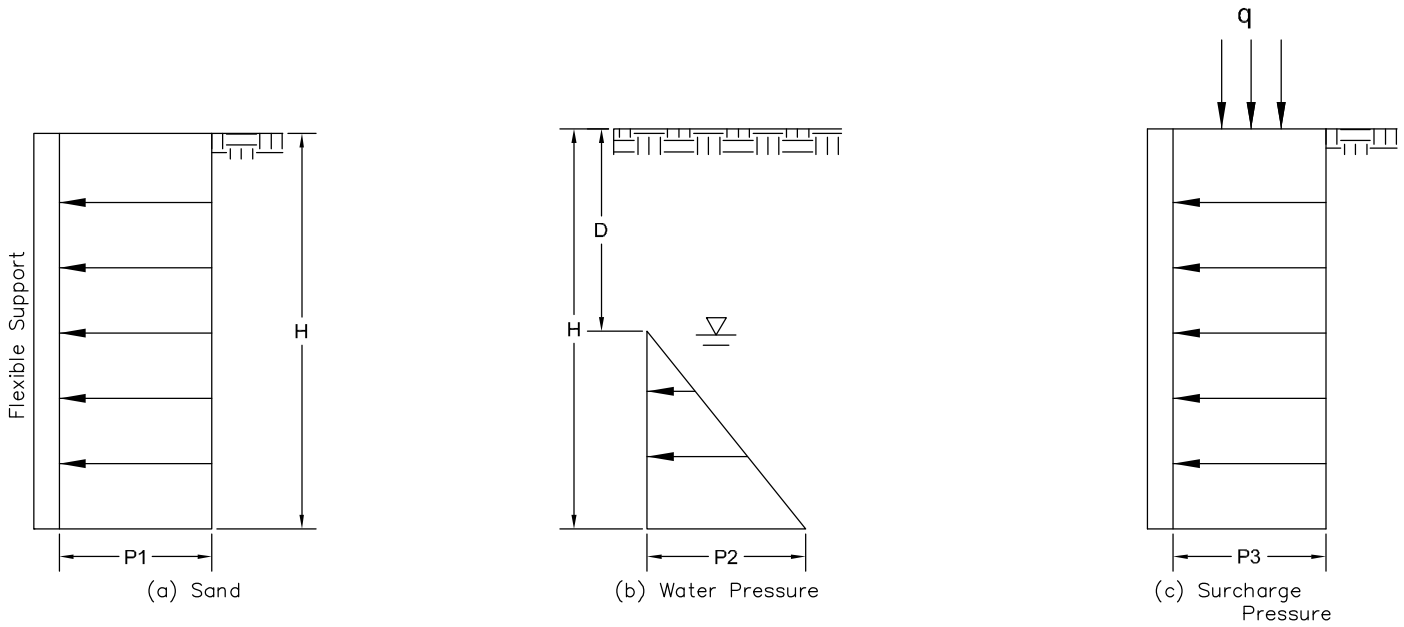

Empirical Pressure Distributions

Where:
H = Total excavation depth, feet
D = Depth to water table, feet
P1 = Lateral earth pressure = $0.65*\gamma HK_a$, psf
P2 = Water pressure = γ_w (H-D), psf
P3 = Lateral earth pressure caused by surcharge = qK_a, psf
γ = Effective unit weight of soil, pcf
γ_w = Unit weight of water, pcf
K_a = Coefficient of active earth pressure = $(1-\sin\varphi)/(1+\sin\varphi)$
φ = Drained friction angle

Notes:
1. All pressures are additive.
2. No safety factors are included.

Reference: Peck, R.B. (1969), "Deep Excavation and Tunneling in soft Ground", 7th ICSMFE, State of art volume, pp. 225-290.

BOTTOM STABILITY FOR BRACED EXCAVATION IN CLAY

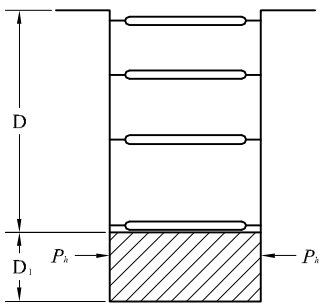

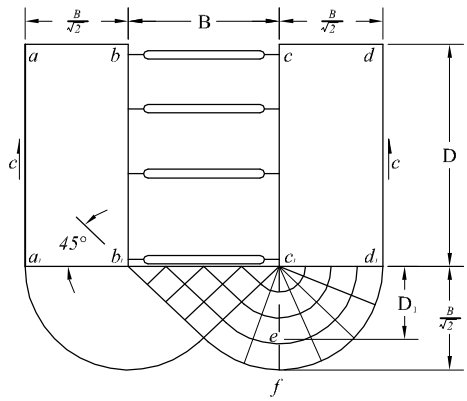

Factor of Safety against bottom of heave,

$$F.S = \frac{NcC}{(\gamma D+q)}$$

where, Nc = Coefficient depending on the dimension of the excavation (see Figure at the bottom)
C = Undrained shear strength of soil in zone immediately around the bottom of the excavation,
γ = Unit weight of soil,
D = Depth of excavation,
q = Surface surcharge.

If F.S < 1.5, sheeting should be extended further down to achieve stability

$$\textit{Depth of Buried Length, } (D_1) = \frac{1.5(\gamma D+q)-NcC}{(C/B)-0.5\gamma} \; ; D_1 \geq 5\ ft.$$

Pressure on buried length, P_h:

For $D_1 < 0.47B$; $P_h = 1.5\ D_1(\gamma D - 1.4\ CD/B - 3.14C)$

For $D_1 > 0.47B$; $P_h = 0.7\ (\gamma DB - 1.4\ CD - 3.14CB)$

where; B = width of excavation

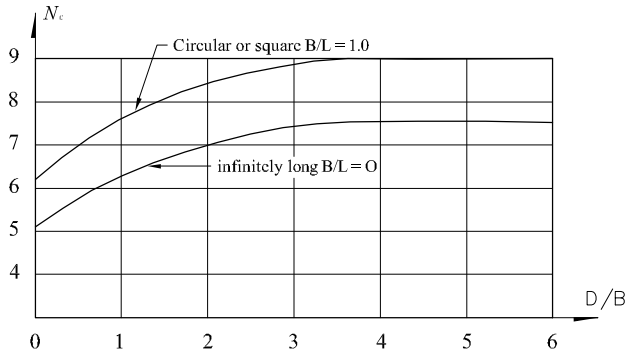

N_c rectangular = $(0.84 + 0.16B/L)N_c$ square

Reference: Bjerrum, L. and Eide, O., Stability of Strutted Excavations in Clay, Geotechnique, 6, 32-47 (1956).

AYLES ENGINEERING CORP.

BUOYANT UPLIFT RESISTANCE FOR BURIED STRUCTURES

(a) WALL / SOIL FRICTION PLUS STRUCTURAL WEIGHT

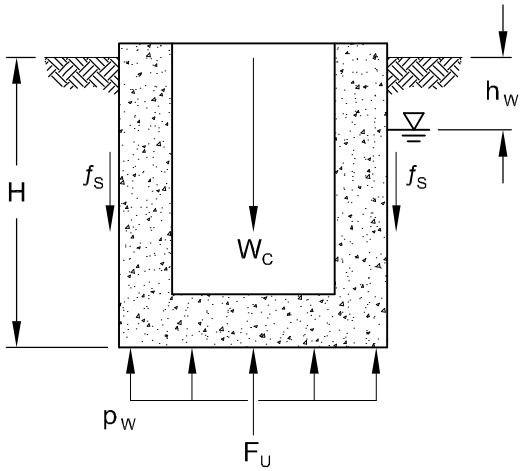

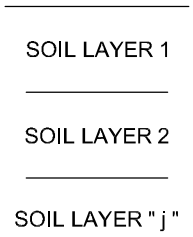

(b) SOIL WEIGHT ABOVE BASE EXTENSION

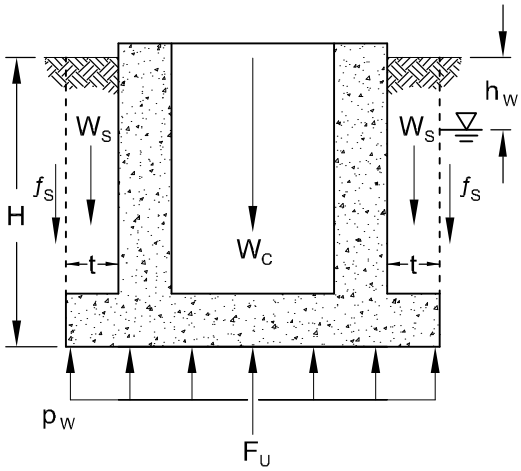

cohesive soils: $f_{S_j} = \alpha\ c_j \leq 3{,}000$ psf

cohesionless soils: $f_{S_j} = 0.75\ K_S\ \sigma_{V_j} \tan\delta_j$

$$Q_S = P_S \sum f_{S_j}\ h_j$$

$$\frac{W_C}{S_{f_a}} + \frac{Q_S}{S_{f_b}} \geq F_U$$

cohesive soils: $f_{S_j} = c_j \leq 3{,}000$ psf

cohesionless soils: $f_{S_j} = 0.75\ K_S\ \sigma_{V_j} \tan\Phi_j$

$$Q_S = P_S \sum f_{S_j}\ h_j$$

$$\frac{W_C}{S_{f_a}} + \frac{Q_S}{S_{f_b}} + \frac{W_S}{S_{f_c}} \geq F_U$$

Where:

A_B = area of base, sq. ft.
H = buried height of structure, ft.
h_W = depth to water table, ft.
p_W = $\gamma_W (H - h_W)$, unit hydrostatic uplift, psf.
γ_W = 62.4 pcf, unit weight of water
F_U = $p_W A_B$, hydrostatic uplift force, lbs.
f_{S_j} = unit frictional resistance of soil layer " j ", psf.
c_j = undrained cohesion of soil layer " j ", psf.
α = 0.55, cohesion factor between soil and structure wall
σ_{V_j} = effective overburden pressure at midpoint of soil layer " j ", psf.
δ_j = 0.75 Φ_j, friction angle between soil layer " j " and concrete wall, degrees
Φ_j = internal angle of friction of soil layer " j ", degrees
K_S = 0.4, coefficient of lateral pressure
h_j = thickness of soil layer " j ", ft.
j = 1, 2, ...
P_S = perimeter of structure base, ft.
Q_S = ultimate skin friction, lbs.
W_C = weight of structure, lbs.
W_S = weight of backfill above base extension, lbs.
S_{f_a} = 1.1, factor of safety for dead weight of structure
S_{f_b} = 3.0, factor of safety for soil / structure friction
S_{f_c} = 1.5, factor of safety for soil weight above base extension
t = width of base extension, ft.

NOTE: neglect f_S in upper 5 feet for expansive clay with a plasticity index > 20.

Reference:

1) *American Concrete Pipe Association, (1996), Manhole Floatation*
2) *O'Neill, M.W., and Reese, L.C., (1999), "Drilled Shafts: Construction Procedures and Design Methods", FHWA-IF-99-025*

ENGINEERING CORP.

GEOTECHNICAL INVESTIGATION

KEEGANS BAYOU WWTP IMPROVEMENTS
WBS NO. R-000265-0079-3
HOUSTON, TEXAS

Reported to:

Infrastructure Associates
Houston, Texas

by

Aviles Engineering Corporation
5790 Windfern
Houston, Texas 77041
713-895-7645

REPORT NO. G131-13R2

October 2014

October 8, 2014

Mr. Eric Cardwell, P.E.
Infrastructure Associates, Inc.
6117 Richmond Avenue, Suite 200
Houston, Texas 77057

Reference: **Geotechnical Investigation**
Keegans Bayou Wastewater Treatment Plant Improvements
9500 White Chapel Lane
Houston, Texas
AEC Report No. G131-13

Dear Mr. Cardwell,

Aviles Engineering Corporation (AEC) is pleased to present this report of our geotechnical investigation for the above referenced project. This investigation was authorized via email by Mr. Eric Cardwell, P.E. of Infrastructure Associates, Inc., on May 16, 2013, based upon AEC Proposal No. G2013-04-14R1, dated May 2, 2013. The contents of this report supersede our previous geotechnical report for this project dated September 17, 2014.

AEC appreciates the opportunity to be of service to you. Please call us if you have any questions or comments concerning this report or when we can be of further assistance.

Respectfully submitted,
Aviles Engineering Corporation
(TBPE Firm Registration No. F-42)

STATE OF TEXAS
WILBER L. WANG
99226
LICENSED
PROFESSIONAL ENGINEER

Wilber L. Wang, M.Eng., P.E.
Project Engineer

Shou Ting Hu, M.S.C.E., P.E.
Principal Engineer

Reports Submitted: 3 Infrastructure Associates, Inc.
1 File (electronic)

Z:\ENGINEERING\REPORTS\2013\131-13 KEEGANS BAYOU WWTP IMPROVEMENTS - INFRASTRUCTURE ASSOCIATES (WILBER)\G131-13R1 FINAL.DOCX

AVILES ENGINEERING CORP.

TABLE OF CONTENTS

EXECUTIVE SUMMARY i
1.0 INTRODUCTION 1
1.1 Project Description 1
1.2 Purpose and Scope 1
2.0 SUBSURFACE EXPLORATION 1
3.0 LABORATORY TESTING 2
4.0 SITE CONDITIONS 2
4.1 Subsurface Conditions 2
4.2 Hazardous Materials 3
4.3 Subsurface Variations 3
5.0 ENGINEERING ANALYSIS AND RECOMMENDATIONS 4
5.1 Grit Chamber 4
5.1.1 Mat Foundation 4
5.1.2 Grit Chamber Pit 5
5.1.3 Pit Excavation 7
5.2 Elevated Structural Slab and Influent/Effluent Channels 10
5.2.1 Drilled-and-Underreamed Footings 10
6.0 CONSTRUCTION CONSIDERATIONS 12
6.1 Site Preparation and Grading 12
6.2 Groundwater Control 12
6.3 Construction Monitoring 13
6.4 Monitoring of Existing Structures 13
7.0 GENERAL 15
8.0 LIMITATIONS 15

APPENDICIES

Appendix A

Plate A-1	Vicinity Map
Plate A-2	Boring Location Plan
Plate A-3	Boring Logs
Plate A-4	Key to Symbols
Plate A-5	Classification of Soils for Engineering Purposes
Plate A-6	Terms Used on Boring Logs
Plate A-7	ASTM & TXDOT Designation for Soil Laboratory Tests

Appendix B

Plate B-1	Critical Heights of Cuts in Nonfissured Clays
Plate B-2	Maximum Allowable Slopes
Plate B-3	A Combination of Bracing and Open Cuts
Plate B-4	Lateral Pressure Diagrams for Open Cuts in Cohesive Soil-Long Term Conditions
Plate B-5	Lateral Pressure Diagrams for Open Cuts in Cohesive Soil-Short Term Conditions
Plate B-6	Lateral Pressure Diagrams for Open Cuts in Sand
Plate B-7	Bottom Stability for Braced Excavation in Clay
Plate B-8	Buoyant Uplift Design

ENGINEERING CORP.

EXECUTIVE SUMMARY

This report presents the results of a geotechnical investigation performed by Aviles Engineering Corporation (AEC) for the proposed City of Houston (COH) Keegans Bayou Wastewater Treatment Plant (WWTP) Improvements, located at 9500 White Chapel Lane, in Houston, Texas (Houston/Harris County Key Map: 530S). According to Infrastructure Associates, the proposed improvements include: (i) a new 20 foot inner diameter grit chamber with perimeter wall that is 15 feet above grade plus a 6.5 foot deep pit; (ii) a new elevated structural slab adjacent to the grit chamber; and (iii) two new elevated concrete channels supported on piers.

Our findings are summarized below:

- Based on Boring B-1, the subsurface soil conditions at the proposed grit chamber generally consist of approximately 2 feet of hard fat clay (CH) fill at the ground surface, underlain by stiff to hard fat/lean clay (CH/CL) to the boring termination depth of 40 feet below grade.

- Details of the soils encountered during drilling are presented on the representative boring log. The cohesive soils encountered in Boring B-1 have Liquid Limits (LL) ranging from 47 to 58 and Plasticity Indices (PI) ranging from 29 to 40. This indicates that the cohesive soils have high expansive potential. The cohesive soils encountered are classified as "CL" and "CH" type soils in accordance with ASTM D 2487.

- Groundwater was encountered at a depth of 30 feet during drilling and subsequently was observed at a depth of 21.8 feet approximately 15 minutes after the initial encounter in Boring B-1. Groundwater at the grit chamber site could be pressurized.

- We did not detect any visual evidence or odor indicating the presence of hazardous materials in the soil samples. However, AEC notes that the presence of potential hazardous material within the project area cannot be discounted based upon the very small and limited number of samples taken.

- Recommendations for design and construction of the grit chamber are presented in Section 5.1 of this report.

- Recommendations for design and construction of the elevated structural slab and elevated concrete channels are presented in Section 5.2 of this report.

- Recommendations for controlling ground water during construction are presented in Section 6.2 of this report.

- This Executive Summary provides an overview of the geotechnical investigation and should not be used without the full text of this report.

ENGINEERING CORP.

GEOTECHNICAL INVESTIGATION

KEEGANS BAYOU WWTP IMPROVEMENTS
WBS NO. R-000265-0079-3
HOUSTON, TEXAS

1.0 INTRODUCTION

1.1 Project Description

This report presents the results of a geotechnical investigation performed by Aviles Engineering Corporation (AEC) for the proposed City of Houston (COH) Keegans Bayou Wastewater Treatment Plant (WWTP) Improvements, located at 9500 White Chapel Lane, in Houston, Texas (Houston/Harris County Key Map: 530S). A vicinity map is presented on Plate A-1 in Appendix A. According to Infrastructure Associates, the proposed improvements include: (i) a new 20 foot inner diameter grit chamber with perimeter wall that is 15 feet above grade plus a 6.5 foot deep pit; (ii) a new elevated structural slab adjacent to the grit chamber; and (iii) two new elevated concrete channels supported on piers.

1.2 Purpose and Scope

The purpose of this geotechnical investigation is to evaluate the subsurface soil and ground water conditions at the project site and to develop geotechnical engineering recommendations for design and construction of the grit chamber, elevated structural slab, and elevated concrete channels. The scope of this geotechnical investigation is summarized below:

1. Drilling and sampling one soil boring to 40 feet below existing grade;
2. Performing soil laboratory testing on selected soil samples;
3. Engineering analysis and recommendations for the grit chamber, including foundation type and depth, allowable bearing capacity, and lateral earth pressure parameters for pit wall design;
4. Engineering analyses and recommendations for the elevated structural slab and elevated concrete channels, including foundation type and depth, and allowable bearing capacity;
5. Construction recommendations for the grit chamber, elevated structural slab, and elevated concrete channels.

2.0 SUBSURFACE EXPLORATION

Subsurface conditions at the site were investigated by drilling one boring to a depth of 40 feet below existing grade at the proposed grit chamber location. Boring survey data is presented on the representative boring log.

The boring location is shown on the attached Boring Location Plan on Plate A-2, in Appendix A. The boring was drilled using a truck-mounted drill rig and advanced initially by dry auger method, then using wet rotary method once groundwater was encountered. Undisturbed samples of cohesive soils were obtained from the boring by pushing 3-inch diameter thin-wall, seamless steel Shelby tube samplers in accordance with ASTM D 1587. Strength of the cohesive soils was estimated in the field using a hand penetrometer. The undisturbed samples of cohesive soils were extruded mechanically from the core barrels in the field and wrapped in aluminum foil; all samples were sealed in plastic bags to reduce moisture loss and disturbance. The samples were then placed in core boxes and transported to the AEC laboratory for testing and further study. After completion of drilling, the boring was backfilled with bentonite chips. Details of the soils encountered in the boring are presented on Plate A-3, in Appendix A.

3.0 LABORATORY TESTING

Soil laboratory testing was performed by AEC personnel. Samples from the boring were examined and classified in the laboratory by a technician under supervision of a geotechnical engineer. Laboratory tests were performed on selected soil samples in order to evaluate the engineering properties of the foundation soils in accordance with applicable ASTM Standards. Atterberg limits, moisture contents, percent passing a No. 200 sieve, and dry unit weight tests were performed on representative samples to establish the index properties and confirm field classification of the subsurface soils. Strength properties of cohesive soils were estimated by means of Unconsolidated-Undrained (UU) triaxial tests performed on undisturbed samples. The test results are presented on their representative boring logs. A key to the boring logs, classification of soils for engineering purposes, terms used on boring logs, and reference ASTM Standards for laboratory testing are presented on Plates A-4 through A-7, in Appendix A.

4.0 SITE CONDITIONS

4.1 Subsurface Conditions

Soil Conditions: Based on Boring B-1, the subsurface soil conditions at the proposed grit chamber generally consist of approximately 2 feet of hard fat clay (CH) fill at the ground surface, underlain by stiff to hard fat/lean clay (CH/CL) to the boring termination depth of 40 feet below grade.

Soil Properties: Details of the soils encountered during drilling are presented on the representative boring log. The cohesive soils encountered in Boring B-1 have Liquid Limits (LL) ranging from 47 to 58 and Plasticity Indices (PI) ranging from 29 to 40. This indicates that the cohesive soils have high expansive potential. The cohesive soils encountered are classified as "CL" and "CH" type soils in accordance with ASTM D 2487. "CH" soils can undergo significant volume changes due to seasonal changes in moisture contents. "CL" soils with lower LL (less than 40) and PI (less than 20) generally do not undergo significant volume changes with changes in moisture content. However, "CL" soils with LL approaching 50 and PI greater than 20 essentially behave as "CH" soils and could undergo significant volume changes.

Groundwater: Groundwater was encountered at a depth of 30 feet during drilling and subsequently was observed at a depth of 21.8 feet approximately 15 minutes after the initial encounter in Boring B-1. Groundwater at the grit chamber site could be pressurized. The information in this report summarizes conditions found on the date the boring was drilled. However, it should be noted that our ground water observations are short term; ground water depths and subsurface soil moisture contents will vary with environmental variations such as frequency and magnitude of rainfall and the time of year when construction is in progress.

4.2 Hazardous Materials

We did not detect any visual evidence or odor indicating the presence of hazardous materials in the soil samples. However, AEC notes that the presence of potential hazardous material within the project area cannot be discounted based upon the very small and limited number of samples taken.

4.3 Subsurface Variations

It should be emphasized that: (i) at any given time, ground water depths can vary from location to location, and (ii) at any given location, ground water depths can change with time. Ground water depths will vary with seasonal rainfall and other climatic/environmental events. Subsurface conditions may vary away from and in between borings.

Clay soils in the Houston area typically have secondary features such as slickensides and contain sand/silt seams/lenses/layers/pockets. It should be noted that the information in the boring logs is based on 3-inch diameter soil samples which were generally continuously obtained at intervals of 2 feet from the ground surface to a depth of 20 feet, then at 5 foot intervals thereafter until the boring termination depth of 40 feet was reacted.

A detailed description of the soil secondary features may not have been obtained due to the small sample size and sampling interval between the samples. Therefore, while some of AEC's logs show the soil secondary features, it should not be assumed that the features are absent where not indicated on the logs.

5.0 ENGINEERING ANALYSIS AND RECOMMENDATIONS

According to Infrastructure Associates, the proposed improvements include: (i) a new 20 foot inner diameter grit chamber with perimeter wall that is 15 feet above grade plus a 6.5 foot deep pit; (ii) a new elevated structural slab adjacent to the grit chamber; and (iii) two new elevated concrete channels supported on piers.

5.1 Grit Chamber

Based on design drawings (dated August 1, 2014) provided by Infrastructure Associates, the new grit chamber will have an inner diameter of 20 feet, with a 1 foot thick perimeter concrete wall (i.e. outer diameter of 22 feet). The majority of the grit chamber is above ground, although there will also be a pit that extends approximately 6 feet below grade. Cement-stabilized sand will be used to partially support the upper chamber and also as backfill against the pit walls. The top of wall elevation of the grit chamber is at elevation +84.09 feet Mean Sea Level (MSL), the top of floor slab elevation of the upper chamber is at elevation +71.07 feet MSL, existing grade is at approximately elevation +68.00 feet MSL, and the top of the pit floor slab is at elevation +63.07 feet MSL. Boring B-1 is at elevation +68.20 feet MSL.

Structural loads for the grit chamber were provided by Infrastructure Associates. The total empty dead weight of the grit chamber is 380 kips. The total long term load is 655 kips (including 25 percent sustained live loads plus normal water level) and the total short term load is 800 kips (including 100 percent sustained live loads plus normal water level).

5.1.1 Mat Foundation

According to the design drawings, the top of the pit floor will be at elevation +63.07 feet MSL and will be supported on a 2 foot thick concrete mat foundation bearing at elevation +61.07 feet MSL.

Allowable Bearing Capacity: Based on Boring B-1 (surface elevation +68.20 feet MSL), a mat foundation founded at elevation +61.07 feet MSL can be designed for a net allowable bearing capacity of 2,700 psf for

sustained loads and 4,000 psf for total loads, based on a minimum factor of safety (FS) of 3 for sustained loads and 2 for total loads, whichever is critical should be used. The modulus of subgrade reaction for soils beneath the mat foundation can be taken as 75 pci.

Mat Settlement: A detailed settlement analysis of the grit chamber is beyond the scope of service of this report. However, since the grit chamber is partially below grade, the long-term consolidation settlement of the structure will be small, since the weight of the soils removed for the pit excavation will partially compensate the weight of the grit chamber structure and equipment.

5.1.2 Grit Chamber Pit

Lateral Earth Pressures: The magnitudes of the lateral earth pressures on the pit walls will depend on the type and density of the backfill, surcharge on the backfill, and hydrostatic pressure, if any. If the backfill is over-compacted or if highly plastic clays are placed behind the walls, the lateral earth pressure could exceed the vertical pressure. Based on the drawings, cement-stabilized sand will be used to backfill the pit excavation. Cement-stabilized sand should be in accordance with Section 02321 of the latest edition of the City of Houston Standard Construction Specifications (COHSCS).

Lateral pressure resulting from construction equipment, structural loads, or other surcharge on the top of the pit walls should be taken into account by adding the equivalent uniformly distributed surcharge to the design lateral pressure. Hydrostatic pressure should also be included in the design (while assuming the pit is drained). We recommend that at least 240 psf uniform surcharge pressure be considered for design of the walls.

According to the drawings, the pit walls will be cast-in-place reinforced concrete. As a result, the pit walls can be designed based on at-rest earth pressure. The at-rest earth pressure at depth z can be determined by Equation (1). The walls should consider short term and long term conditions, whichever condition is critical should be used for design. Lateral earth pressure parameters for the pit wall design are presented on Table 1. Based on the drawings, approximately 1 to 3 feet of cement-stabilized sand backfill will be placed around the pit perimeter. Since the amount of cement-stabilized sand backfill surrounding the pit walls is relatively small, AEC recommends that the in-situ soil parameters be used for pit wall design.

$$p_0 = (q_s + \gamma h_1 + \gamma' h_2)K_0 + \gamma_w h_2 \qquad \text{.....Equation (1)}$$

where, p_0 = at-rest earth pressure, psf.
q_s = uniform surcharge pressure, minimum 240 psf.
γ, γ' = wet and buoyant unit weights of soil, pcf.
h_1 = depth from ground surface to groundwater table, feet.
h_2 = $z-h_1$, depth from groundwater table to point under consideration, feet.
Z = depth below ground surface, feet.
K_0 = coefficient of at-rest earth pressure.
γ_w = unit weight of water, 62.4 pcf.

Table 1. Design Soil Parameters for Pit Walls (Based on Boring B-1)

Elevation (ft)	Soil Type	γ (pcf)	γ' (pcf)	Short-Term					Long-Term				
				C (psf)	φ (deg)	K_a	K_0	K_p	C' (psf)	φ' (deg)	K_a	K_0	K_p
N/A	Cement Stabilized Sand	120	58	0	30	0.33	0.70	3.00	0	30	0.33	0.70	3.00
68 to 66	Fill: hard CH	120	58	1500	0	1.00	1.00	1.00	150	16	0.57	0.72	1.76
66 to 58	Very stiff to hard CH	131	69	3000	0	1.00	1.00	1.00	300	16	0.57	0.72	1.76

Notes: (1) γ = unit weight for soil above water level, γ' = buoyant unit weight for soil below water level.
(2) C = ultimate cohesion, φ = ultimate angle of internal friction.
(3) K_a = coefficient of active earth pressure, K_0 = coefficient of at-rest earth pressure, K_p = coefficient of passive earth pressure, for level backfill.
(4) AEC recommends the use of FS = 2 for passive earth pressure if it is to be used in the design.

Hydrostatic Uplift Resistance: The pit should be designed to resist hydrostatic uplift. For uplift design of underground structures, we recommend that the water level be assumed to be at the ground surface (while assuming the pit is drained and empty). If the dead weights of the structure plus the skin friction resistance of the subgrade soils are inadequate to resist uplift forces, toe extensions of the mat foundation may be constructed so that the effective weight of the soil above the extended mat can be utilized to resist the uplift forces. The unit buoyant weight of concrete can be taken as 90 pcf. The minimum recommended factors of safety against uplift should be 1.1 for concrete weight, 1.5 for soil weight and 3.0 for soil friction. Design soil parameters for uplift design are included on Table 1 above. Recommended design criteria for uplift resistance are shown on Plate B-8, in Appendix B.

Pit Wall Backfill: If the pit excavation will be laid/stepped back, we recommend use of select fill as backfill behind the pit walls. The excavation area should extend a minimum of 2 feet horizontally beyond the mat foundation perimeter, then slope upwards at a H:V = 1:1 slope or flatter. Select fill should be in accordance with Section 02316 of the latest edition of the COHSCS.

5.1.3 Pit Excavation

Cohesive soils in the Houston area contain many secondary features which affect excavation stability, including sand seams and slickensides. Slickensides are shiny weak failure planes which are commonly present in fat clays; such clays often fail along these weak planes when they are not laterally supported, such as in an open excavation. The Contractor should not assume that slickensides and sand seams/layers/pockets are absent where not indicated on the logs.

The Contractor should be responsible for designing, constructing and maintaining safe excavations. The excavations should not cause any distress to existing structures.

Excavations 20 feet and Deeper: OSHA requires that shoring or bracing for excavations 20 feet and deeper be specifically designed by a licensed professional engineer.

Excavations Less than 20 Feet Deep: Excavations that are less than 20 feet deep may be shored, sheeted and braced, or laid back to a stable slope for the safety of workers, the general public, and adjacent structures, except for excavations which are less than 5 feet deep and verified by a competent person to have no cave-in potential. The excavation should be in accordance with Occupational Safety and Health Administration (OSHA), Safety and Health Regulations, 29 CFR, Part 1926. Firm to hard clays should be considered OSHA Class "B" soils, while fill soils and granular soils should be considered OSHA Class "C" soils. Submerged soils should be classified as OSHA Class "C" soils, unless dewatering is conducted to lower the ground water level below the excavation bottom. Based on Boring B-1, the 2 feet of hard fat clay fill at the ground surface can be classified as OSHA Class "C", and below the fill, the very stiff to hard fat clay to a depth of 10 feet below grade can can be classified as OSHA Class "B".

Critical Height is defined as the height a slope will stand unsupported for a short time; in cohesive soils, it is used to estimate the maximum depth of open-cuts at given side slopes. Critical Height may be calculated based on the soil cohesion. Values for various slopes and cohesion are shown on Plate B-1, in Appendix B. Cautions listed below should be exercised in use of Critical Height applications:

1. No more than 50 percent of the Critical Height computed should be used for vertical slopes. Unsupported vertical slopes are not recommended where granular soils or soils that will slough when not laterally supported are encountered within the excavation depth.

2. If the soil at the surface is dry to the point where tension cracks occur, any water in the crack will increase the lateral pressure considerably. In addition, if tension cracks occur, no cohesion should be assumed for the soils within the depth of the crack. The depth of the first waler should not exceed the depth of the potential tension crack. Struts should be installed before lateral displacement occurs.

3. Shoring should be provided for excavations where limited space precludes adequate side slopes, e.g., where granular soils will not stand on stable slopes and/or for deep open cuts.

4. All excavation and shoring should be designed and constructed by qualified professionals in accordance with OSHA requirements.

Plate B-2, in Appendix B, presents the maximum (steepest) allowable slopes for OSHA Soil Types for excavations less than 20 feet.

If limited space is available for the required open cut side slopes, the space required for the slope can be reduced by using a combination of bracing and open cut as illustrated on Plate B-3, in Appendix B. Guidelines for bracing and calculating bracing stress are presented below.

Computation of Bracing Pressures: The following method can be used for calculating earth pressure against bracing for open cuts. Lateral pressure resulting from construction equipment, traffic loads, or other surcharge should be taken into account by adding the equivalent uniformly distributed surcharge to the design lateral pressure. Hydrostatic pressure, if any, should also be considered. The active earth pressure at depth z can be determined by Equation (2) below, the design soil parameters are presented on Table 1 in Section 5.1.2 of this report.

$$p_a = (q_s + rh_1 + r'h_2)K_a - 2c\sqrt{K_a} + r_w h_2 \qquad \text{.....Equation (2)}$$

where,
- p_a = active earth pressure, psf.
- K_a = coefficient of active earth pressure, see Table 1.
- c = cohesion of clayey soils, see Table 1, c can be omitted for design.
- q_s = uniform surcharge pressure, minimum 300 psf.
- γ, γ = wet and buoyant unit weights of soil, pcf, see Table 1.
- h_1 = depth from ground surface to groundwater table, feet.
- h_2 = $z-h_1$, depth from groundwater table to point under consideration, feet.
- z = depth below ground surface, feet.
- γ_w = unit weight of water, 62.4 pcf.

Pressure distribution for the practical design of struts in open cuts for clays and sands are illustrated on Plates B-4 through B-6, in Appendix B.

Bottom Stability: In open-cuts, it is necessary to consider the possibility of the bottom failing by heaving, due to the removal of the weight of excavated soil. Heaving typically occurs in soft plastic clays when the excavation depth is sufficiently deep enough to cause the surrounding soil to displace vertically due to bearing capacity failure of the soil beneath the excavation bottom, with a corresponding upward movement of the soils in the bottom of the excavation.

In fat and lean clays, heave normally does not occur unless the ratio of Critical Height to Depth of Cut approaches one. In very sandy and silty lean clays and granular soils, heave can occur if an artificially large head of water is created due to installation of impervious sheeting while bracing the cut. This can be mitigated if ground water is lowered below the excavation by dewatering the area. Guidelines for evaluating bottom stability in clay soils are presented on Plate B-7, in Appendix B.

If the excavation extends below ground water, and the soils at or near the bottom of the excavation are mainly sands or silts, the bottom can fail by blow-out (boiling) when a sufficient hydraulic head exists. The potential for boiling or in-flow of granular soils increases where the ground water is pressurized. To reduce the potential for boiling of excavations terminating in granular soils below pressurized ground water, the ground water table should be lowered at least 3 feet below the excavation bottom.

Calcareous nodules and slickensides within cohesive soil strata were encountered in our borings. These secondary structures may become sources of localized instability when they are exposed during excavation, especially when they become saturated. Such soils have a tendency to slough or cave in when not laterally confined, such as in trench excavations. The Contractor should be aware of the potential for cave-in of the soils. Low plasticity soils (silts and clayey silts) will lose strength and may behave like granular soils when saturated.

Protection of Excavation Walls and Bottom: We recommend that the exposed walls of the pit foundation excavations be covered by a polyethylene membrane. The excavation bottom must also be protected to prevent loss of moisture. We recommend that the exposed subgrade of the foundation excavation be covered by a minimum 2-inch thick lean concrete seal slab if the mat foundation will not be poured within 24 hours. Central to this recommendation is the importance of preserving the moisture regime of the subsurface soils, in order to minimize the shrink/swell potential of the high plasticity fat clays at the site.

5.2 Elevated Structural Slab and Influent/Effluent Channels

Infrastructure Associates's drawings indicate that the existing elevated structural slab and elevated influent/effluent channels are supported on drilled-and-underreamed footings, placed at approximately 10 feet below typical grade. The drawings indicate that typical grade is at an approximate elevation of +68.00 feet MSL, and that the footings are founded approximately at an elevation of +56.59 feet MSL. The existing elevated structural slab and elevated channels are at an elevation of approximately +75.65 to +76.65 feet MSL.

Structural loads for the influent and effluent channels were provided by Infrastructure Associates. The total empty dead weight is 26 kips per footing. The total long term load is 40 kips per footing (including 25 percent sustained live loads plus normal water level) and the total short term load is 50 kips per footing (including 100 percent sustained live loads plus normal water level).

Based on the highly expansive clay soils encountered in Boring B-1, AEC recommends that the new elevated structural slab and elevated concrete channels also be supported on drilled-and-underreamed footings, founded at a depth below the zone of seasonal moisture variation (typically 10 feet below grade in the Houston area). AEC recommends that the new drilled footings be founded at an elevation that matches the existing footing elevation.

5.2.1 Drilled-and-Underreamed Footings

Allowable Bearing Capacity: Based on Boring B-1 (surface elevation +68.20 feet MSL), drilled-and-underreamed footings founded at approximately 11.6 feet below existing grade (at an elevation of +56.60 feet MSL) should be designed for a net allowable bearing capacity of 3,800 psf for sustained loads and 5,700 psf for total loads, based on a minimum FS of 3 for sustained loads and 2 for total loads; whichever is critical should be used for design.

Vertical Reinforcement: To withstand uplift forces resulting from the shrink/swell movements of clay soils in the moisture active zone, each footing should contain reinforcing steel throughout its full length to sustain an uplift load of at least 60d kips, where "d" is the diameter of the shaft in feet.

Footing Spacing: To reduce stress overlap from adjacent footings and potential construction problems, the minimum edge-to-edge clear spacing between the underreams should not be less than 0.6 x diameter of the larger underream. New foundations should be spaced to reduce the potential of new foundations affecting existing foundations or the pit foundation (and vice versa) by placing the new foundations outside the bearing (stress) zone of existing foundations. The bearing (stress) zone can be defined by a line drawn downward from the outer edge of the existing foundation and inclined at an angle of 45 degrees to the vertical.

Footing Settlements: Based on the soil conditions encountered, we estimate that drilled-and-underreamed footings, designed and constructed as recommended in this report, will experience total settlements on the order of 1 inch.

Drilled-and-Underreamed Footing Construction: Drilled-and-underreamed footings should be constructed in accordance with Section 02465 of the latest edition of the COHSCS. A qualified geotechnical technician should check each footing excavation prior to placing concrete to insure that:

1) The footing has been constructed to the specified dimensions at the recommended depth and founded in the correct formation as indicated in this report;
2) The column is concentric with the pier cap/grade beam and drilled footing; and
3) Excessive cuttings, any soft or compressible materials, and ponded water are removed from the bottom of the excavation.

There is a possibility that slickensides and/or pockets/seams of sands/silts within the clay soils may make underreaming (belling) difficult, and result in potential sloughing or caving-in of the shaft excavation sidewalls during construction, particularly for underreams over 6 feet in diameter. We recommend that a maximum diameter ratio of bell to shaft not exceed 2.5 to 1. Although the groundwater level encountered in Boring B-1 are below the anticipated footing depth, the site's groundwater level will fluctuate with seasonal rainfall and other climatic events, and may be higher at the time of construction. If ground water is encountered within the cohesive soils during construction, sump pumps may be used to pump water out from the excavations and soft sediments should be removed. However, if significant sloughing or caving occurs during shaft excavation, further excavation should be stopped and a reduced bell/shaft ratio or even straight-sided shafts (matching the bell diameter) in combination with bentonite slurry and/or temporary casing may be necessary.

Placement of concrete should be accomplished immediately after excavation is completed to reduce potential for sloughing of the foundation soils. Footing excavations should not be left open overnight. No concrete should be placed without the prior approval of the Owner's Representative. New drilled footings should not be excavated within 2 bell diameters (edge to edge) of an open footing excavation, or one in which concrete has been placed in

the preceding 24 hours, to prevent movement of fresh concrete from the recently filled footing to an adjacent unfilled footing.

6.0 CONSTRUCTION CONSIDERATIONS

6.1 Site Preparation and Grading

To mitigate site problems that may develop following prolonged periods of rainfall, it is essential to have adequate drainage to maintain a relatively dry and firm surface prior to starting any work at the site. Adequate drainage should be maintained throughout the construction period. Methods for controlling surface runoff and ponding include proper site grading, berm construction around exposed areas, and installation of sump pits with pumps.

6.2 Groundwater Control

The need for groundwater control will depend on the depth of excavation relative to the groundwater depth at the time of construction. In the event that there is heavy rain prior to or during construction, the groundwater table may be higher than indicated in this report; higher seepage is also likely and may require a more extensive groundwater control program. In addition, groundwater may be pressurized in certain areas of the site, requiring further evaluation and consideration of the excess hydrostatic pressures.

The Contractor should be responsible for selecting, designing, constructing, maintaining, and monitoring a groundwater control system and adapt his operations to ensure the stability of the excavations. Groundwater information presented in Section 4.1 of this report, along with consideration for potential environmental and site variation between the time of our field exploration and construction, should be incorporated in evaluating groundwater depths. The following recommendations are intended to guide the Contractor during design and construction of the dewatering system.

In cohesive soils seepage rates are lower than in granular soils and groundwater is usually collected in sumps and channeled by gravity flow to storm sewers. If cohesive soils contain significant secondary features, seepage rates will be higher. This may require larger sumps and drainage channels, or if significant granular layers are interbedded within the cohesive soils, methods used for granular soils may be required. Where it is present, pressurized groundwater will also yield higher seepage rates.

Groundwater for excavations within saturated sands can be controlled by the installation of wellpoints. The practical maximum dewatering depth for well points is about 15 feet. When groundwater control is required below 15 feet, multiple staged wellpoint or deep wells with submersible pumps have generally proved successful. Generally, the groundwater depth should be lowered at least 3 feet below the excavation bottom to be able to work on a firm surface when water-bearing granular soils are encountered.

Extended and/or excessive dewatering can result in settlement of existing structures in the vicinity; the Contractor should take the necessary precautions to minimize the effect on existing structures in the vicinity of the dewatering operation. We recommend that the Contractor verify the groundwater depths and seepage rates prior to and during construction and retain the services of a dewatering expert (if necessary) to assist him in identifying, implementing, and monitoring the most suitable and cost-effective method of controlling groundwater.

For open cut construction in cohesive soils, the possibility of bottom heave must be considered due to the removal of the weight of excavated soil. In lean and fat clays, heave normally does not occur unless the ratio of Critical Height to Depth of Cut approaches one. In silty clays, heave does not typically occur unless an artificially large head of water is created through the use of impervious sheeting in bracing the cut. Guidelines for evaluating bottom stability are presented in Section 5.1.3 of this report.

6.3 Construction Monitoring

Site preparation (including clearing and proof-rolling), earthwork operations, foundation construction, and subgrade preparation should be monitored by qualified geotechnical professionals to check for compliance with project documents and changed conditions, if encountered.

6.4 Monitoring of Existing Structures

Existing structures in the vicinity of the project area should be closely monitored prior to, during, and for a period after excavation. Several factors (including soil type and stratification, construction methods, weather conditions, other construction in the vicinity, construction personnel experience, and supervision) may impact ground movement in the vicinity of the site. We therefore recommend that the Contractor be required to survey and adequately document the condition of existing structures in the vicinity of the project area.

7.0 GENERAL

AEC should be allowed to review construction documents and specifications prior to release to check that the geotechnical recommendations and design criteria presented herein are properly interpreted. The information contained in this report summarizes conditions found on the date the boring was drilled. The attached boring logs are true representations of the soils encountered at the specific boring locations on the date of drilling. Due to variations encountered in the subsurface conditions across the site, changes in soil conditions from those presented in this report should be anticipated. AEC should be notified immediately when conditions encountered during construction are significantly different from those presented in this report.

8.0 LIMITATIONS

The investigation was performed using the standard level of care and diligence normally practiced by recognized geotechnical engineering firms in this area, presently performing similar services under similar circumstances. The report has been prepared exclusively for the project and location described in this report, and is intended to be used in its entirety. If pertinent project details change or otherwise differ from those described herein, AEC should be notified immediately and retained to evaluate the effect of the changes on the recommendations presented in this report, and revise the recommendations if necessary. The scope of services does not include a fault investigation. The recommendations presented in this report should not be used for other structures located at this site or similar structures located at other sites, without additional evaluation and/or investigation.

AVILES ENGINEERING CORP.

APPENDIX A

Plate A-1	Vicinity Map
Plate A-2	Boring Location Plan
Plate A-3	Boring Logs
Plate A-4	Key to Symbols
Plate A-5	Classification of Soils for Engineering Purposes
Plate A-6	Terms Used on Boring Logs
Plate A-7	ASTM & TXDOT Designation for Soil Laboratory Tests

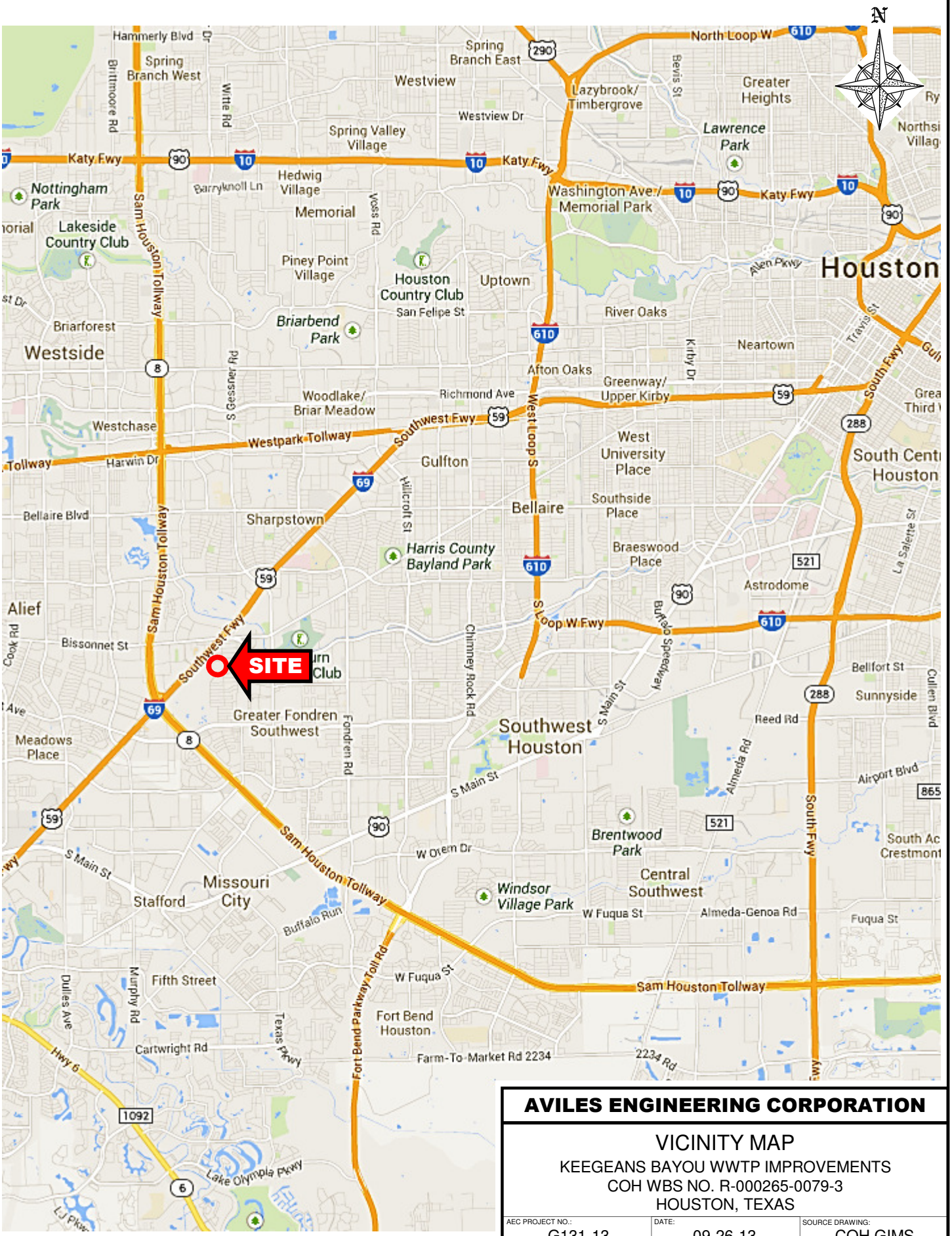

AVILES ENGINEERING CORPORATION

VICINITY MAP

KEEGEANS BAYOU WWTP IMPROVEMENTS
COH WBS NO. R-000265-0079-3
HOUSTON, TEXAS

AEC PROJECT NO.:	DATE:	SOURCE DRAWING:
G131-13	09-26-13	COH GIMS
APPROX. SCALE:	DRAFTED BY:	PLATE NO.:
N.T.S.	BpJ	PLATE A-1

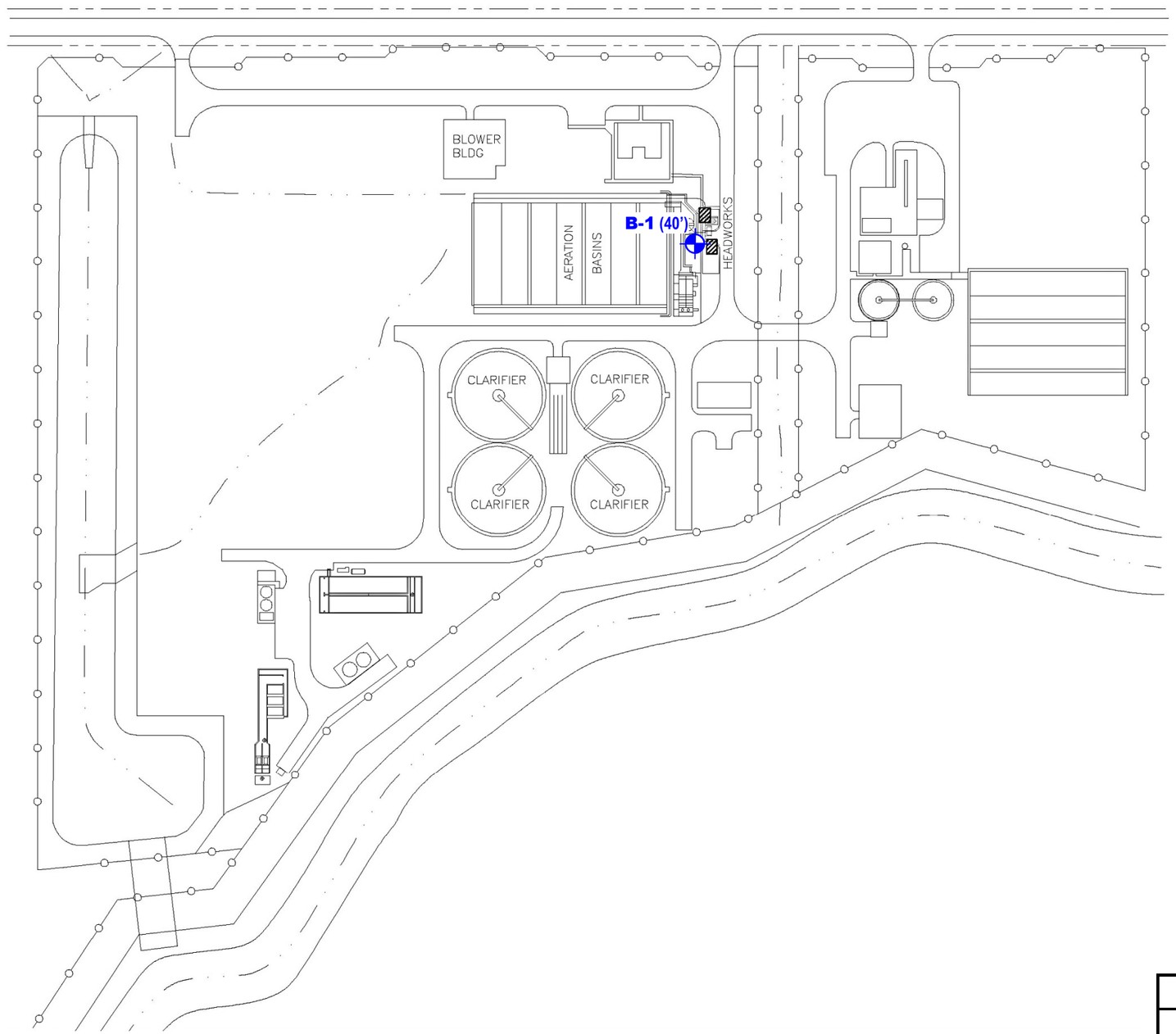

AVILES ENGINEERING CORPORATION

BORING LOCATION PLAN

KEEGEANS BAYOU WWTP IMPROVEMENTS
COH WBS NO. R-000265-0079-3
HOUSTON, TEXAS

AEC PROJECT NO.:	DATE:	SOURCE DRAWING PROVIDED BY:
G131-13	09-26-13	INFRASTRUCTURE ASSOC.
APPROX. SCALE:	DRAFTED BY:	PLATE NO.:
1" = 200'	BpJ	PLATE A-2

AVILES ENGINEERING CORP. GEOTECHNICAL ENGINEERS

PROJECT: **Keegans Bayou WWTP Improvements** BORING **B-1**

DATE **6/7/13** TYPE **4" Dry Auger / Wet Rotary** LOCATION **See Boring Location Plan**

DESCRIPTION
Survey Coordinates (TSPC, Surface):
Easting: 3066643.29
Northing: 13808992.43
Elevation: 68.20
WBS No. R-000265-0079-3

ELEVATION IN FEET	DEPTH IN FEET	DESCRIPTION	-200 MESH	DRY DENSITY, PCF	MOISTURE CONTENT, %	LIQUID LIMIT	PLASTIC LIMIT	PLASTICITY INDEX
	0	Fill: hard, dark gray Fat Clay w/Sand (CH), with calcareous nodules, sand pockets, shell, roots, and ferrous stains	71		12	51	16	35
66		Very stiff, dark gray Fat Clay (CH)			21			
	6	Hard, dark gray and gray Fat Clay w/Sand (CH), with calcareous nodules, siltstone fragments, and ferrous stains		113	16			
		-with sand pockets 6'-8'	76		17	58	18	40
60		-tan and light gray, with abundant calcareous nodules 6'-10'			21			
	12	Stiff to very stiff, reddish brown and light gray Fat Clay (CH), with slickensides, silt pockets, and calcareous nodules		94	27			
54		Very stiff, light gray and tan Fat Clay (CH), with sand pockets and ferrous stains	86		21	52	17	35
		Very stiff to hard, light gray and tan Lean Clay w/Sand (CL), with sand partings, calcareous nodules, and ferrous stains			17			
	18			109	18			
48			82		16	47	18	29
	24			123	14			
42		Hard, light gray and tan Lean Clay (CL), with slickensides and sand partings	91		16	48	14	34
	30							
36		Stiff to hard, reddish brown and light gray Fat Clay (CH), with slickensides		105	24			
	36							
30		-with calcareous nodules and siltstone fragments 38'-40'						
		Termination depth = 40 feet.						
	42							

SHEAR STRENGTH, TSF

△ Confined Compression
● Unconfined Compression
○ Pocket Penetrometer
□ Torvane

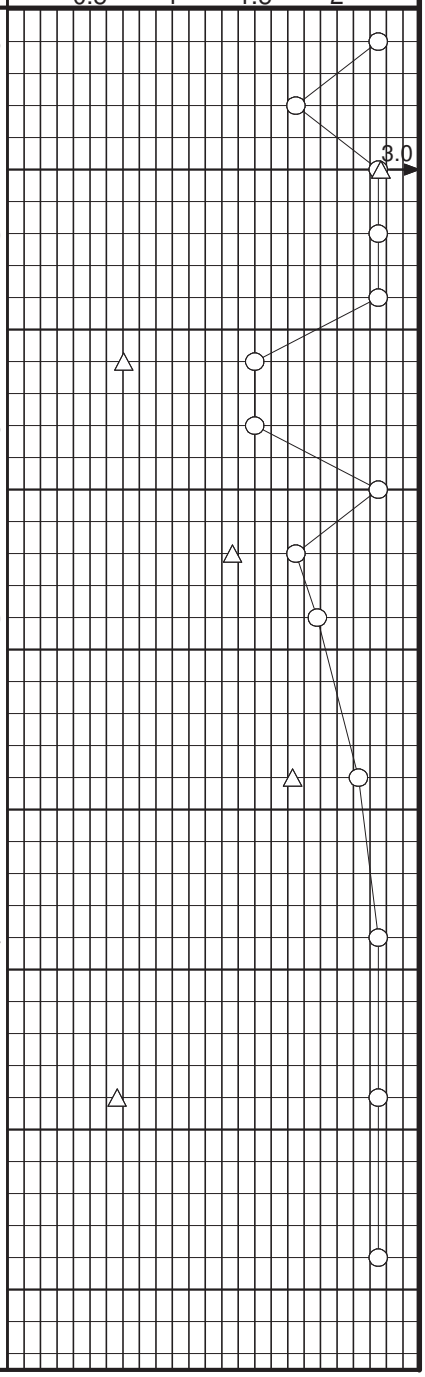

BORING DRILLED TO **30** FEET WITHOUT DRILLING FLUID
WATER ENCOUNTERED AT **30** FEET WHILE DRILLING
WATER LEVEL AT **21.8** FEET AFTER **15 MIN.**
DRILLED BY **V&S** DRAFTED BY LOGGED BY **BpJ**

KEY TO SYMBOLS

Symbol	Description
Strata symbols	
	Fill
	High plasticity clay
	Low plasticity clay
Misc. Symbols	
	Water table depth during drilling
	Subsequent water table depth
○	Pocket Penetrometer
△	Confined Compression
Soil Samplers	
■	Undisturbed thin wall Shelby tube

AYLES ENGINEERING CORP.

CLASSIFICATION OF SOILS FOR ENGINEERING PURPOSES

ASTM Designation D-2487

MAJOR DIVISIONS				GROUP SYMBOL	TYPICAL NAMES
COARSE-GRAINED SOILS (Less than 50% passes No. 200 sieve)	GRAVELS (Less than 50% of coarse fraction passes No. 4 sieve)	CLEAN GRAVELS (Less than 5% passes No. 200 sieve)		GW	Well-graded gravel, well-graded gravel with sand
				GP	Poorly-graded gravel, poorly-graded gravel with sand
		GRAVELS WITH FINES (More than 12% passes No. 200 sieve)	Limits plot below "A" line & hatched zone on plasticity chart	GM	Silty gravel, silty gravel with sand
			Limits plot above "A" line & hatched zone on plasticity chart	GC	Clayey gravel, clayey gravel with sand
	SANDS (50% or more of coarse fraction passes No. 4 sieve)	CLEAN SANDS (Less than 5% passes No. 200 sieve)		SW	Well-graded sand, well-graded sand with gravel
				SP	Poorly-graded sand, poorly-graded sand with gravel
		SANDS WITH FINES (More than 12% passes No. 200 sieve)	Limits plot below "A" line & hatched zone on plasticity chart	SM	Silty sand, silty sand with gravel
			Limits plot above "A" line & hatched zone on plasticity chart	SC	Clayey sand, clayey sand with gravel
FINE-GRAINED SOILS (50% or more passes No. 200 sieve)		SILTS AND CLAYS (Liquid Limit Less Than 50%)		ML	Silt, silt with sand, silt with gravel, sandy silt, gravelly silt
				CL	Lean clay, lean clay with sand, lean clay with gravel, sandy lean clay, gravelly lean clay
				OL	Organic clay, organic clay with sand, sandy organic clay, organic silt, sandy organic silt
		SILTS AND CLAYS (Liquid Limit 50% or More)		MH	Elastic silt, elastic silt with sand, sandy elastic silt, gravelly elastic silt
				CH	Fat clay, fat clay with sand, fat clay with gravel, sandy fat clay, gravelly fat clay
				OH	Organic clay, organic clay with sand, sandy organic clay, organic silt, sandy organic silt

NOTE: Coarse soils between 5% and 12% passing the No. 200 sieve and fine-grained soils with limits plotting in the hatched zone of the plasticity chart are to have dual symbols.

PLASTICITY CHART

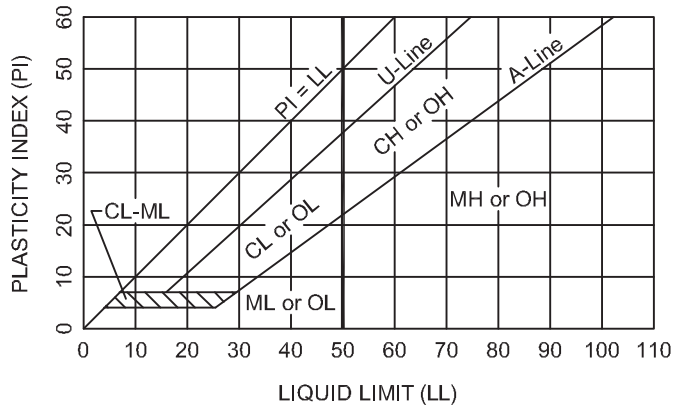

Equation of A-Line: Horizontal at PI=4 to LL=25.5, then PI=0.73(LL-20)

Equation of U-Line: Vertical at LL=16 to PI=7, then PI=0.9(LL-8)

DEGREE OF PLASTICITY OF COHESIVE SOILS

Degree of Plasticity	Plasticity Index
None	0 - 4
Slight	5 - 10
Medium	11 - 20
High	21 - 40
Very High	>40

SOIL SYMBOLS

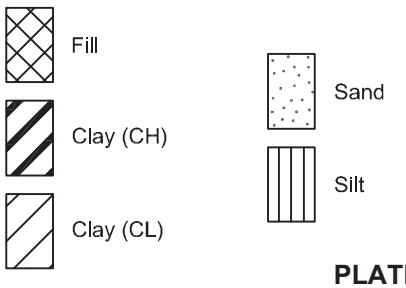

PLATE A-5

AYLES ENGINEERING CORP.

TERMS USED ON BORING LOGS

SOIL GRAIN SIZE

U.S. STANDARD SIEVE

6"	3"	3/4"	#4	#10	#40	#200

BOULDERS	COBBLES	GRAVEL		SAND			SILT	CLAY
		COARSE	FINE	COARSE	MEDIUM	FINE		

152	76.2	19.1	4.76	2.00	0.420	0.074	0.002

SOIL GRAIN SIZE IN MILLIMETERS

STRENGTH OF COHESIVE SOILS

Consistency	Undrained Shear Strength, Kips per Sq. ft.
Very Soft	less than 0.25
Soft	0.25 to 0.50
Firm	0.50 to 1.00
Stiff	1.00 to 2.00
Very Stiff	2.00 to 4.00
Hard	greater than 4.00

RELATIVE DENSITY OF COHESIONLESS SOILS FROM STANDARD PENETRATION TEST

Very Loose	<4 bpf
Loose	5-10 bpf
Medium Dense	11-30 bpf
Dense	31-50 bpf
Very Dense	>50 bpf

SPLIT-BARREL SAMPLER DRIVING RECORD

Blows per Foot	Description
25	25 blows driving sampler 12 inches, after initial 6 inches of seating.
50/7"	50 blows driving sampler 7 inches, after initial 6 inches of seating.
Ref/3"	50 blows driving sampler 3 inches, during initial 6-inches seating interval.

NOTE: To avoid change to sampling tools, driving is limited to 50 blows during or after seating interval.

DRY STRENGTH ASTM D2488

None	Dry specimen crumbles into powder with mere pressure of handling
Low	Dry specimen crumbles into powder with some finger pressure
Medium	Dry specimen breaks into pieces or crumbles with considerable pressure
High	Dry specimen cannot be broken with finger pressure, it can be broken between thumb and hard surface
Very High	Dry specimen cannot be broken between thumb and hard surface

MOISTURE CONDITION ASTM D2488

Dry	Absence of moisture, dusty, dry to the touch
Moist	Damp but no visible water
Wet	Visible free water

SOIL STRUCTURE

Slickensided	Having planes of weakness that appear slick and glossy. The degree of slickensidedness depends upon the spacing of slickensides and the easiness of breaking along these planes.
Fissured	Containing shrinkage or relief cracks, often filled with fine sand or silt; usually more or less vertical.
Pocket	Inclusion of material of different texture that is smaller than the diameter of the sample.
Parting	Inclusion less than 1/8 inch thick extending through the sample.
Seam	Inclusion 1/8 inch to 3 inches thick extending through the sample.
Layer	Inclusion greater than 3 inches thick extending through the sample.
Laminated	Soil sample composed of alternating partings or seams of different soil types.
Interlayered	Soil sample composed of alternating layers of different soil types.
Intermixed	Soil sample composed of pockets of different soil types and layered or laminated structure is not evident.
Calcareous	Having appreciable quantities of calcium material.

ASTM & TXDOT DESIGNATION FOR SOIL LABORATORY TESTS

NAME OF TEST	ASTM TEST DESIGNATION	TXDOT TEST DESIGNATION
Moisture Content	D 2216	Tex-103-E
Specific Gravity	D 854	Tex-108-E
Sieve Analysis	D 421 D 422	Tex-110-E (Part 1)
Hydrometer Analysis	D 422	Tex-110-E (Part 2)
Minus No. 200 Sieve	D 1140	Tex-111-E
Liquid Limit	D 4318	Tex-104-E
Plastic Limit	D 4318	Tex-105-E
Shrinkage Limit	D 427	Tex-107-E
Standard Proctor Compaction	D 698	Tex-114-E
Modified Proctor Compaction	D 1557	Tex-113-E
Permeability (constant head)	D 2434	-
Consolidation	D 2435	-
Direct Shear	D 3080	-
Unconfined Compression	D 2166	-
Unconsolidated-Undrained Triaxial	D 2850	Tex-118-E
Consolidated-Undrained Triaxial	D 4767	Tex-131-E
Pinhole Test	D 4647	-
California Bearing Ratio	D 1883	-
Unified Soil Classification System	D 2487	Tex-142-E

AVILES ENGINEERING CORP.

APPENDIX B

Plate B-1	Critical Heights of Cuts in Nonfissured Clays
Plate B-2	Maximum Allowable Slopes
Plate B-3	A Combination of Bracing and Open Cuts
Plate B-4	Lateral Pressure Diagrams for Open Cuts in Cohesive Soil-Long Term Conditions
Plate B-5	Lateral Pressure Diagrams for Open Cuts in Cohesive Soil-Short Term Conditions
Plate B-6	Lateral Pressure Diagrams for Open Cuts in Sand
Plate B-7	Bottom Stability for Braced Excavation in Clay
Plate B-8	Buoyant Uplift Design

AYLES ENGINEERING CORP.

Critical Heights of Cut Slopes in Nonfissured Clays

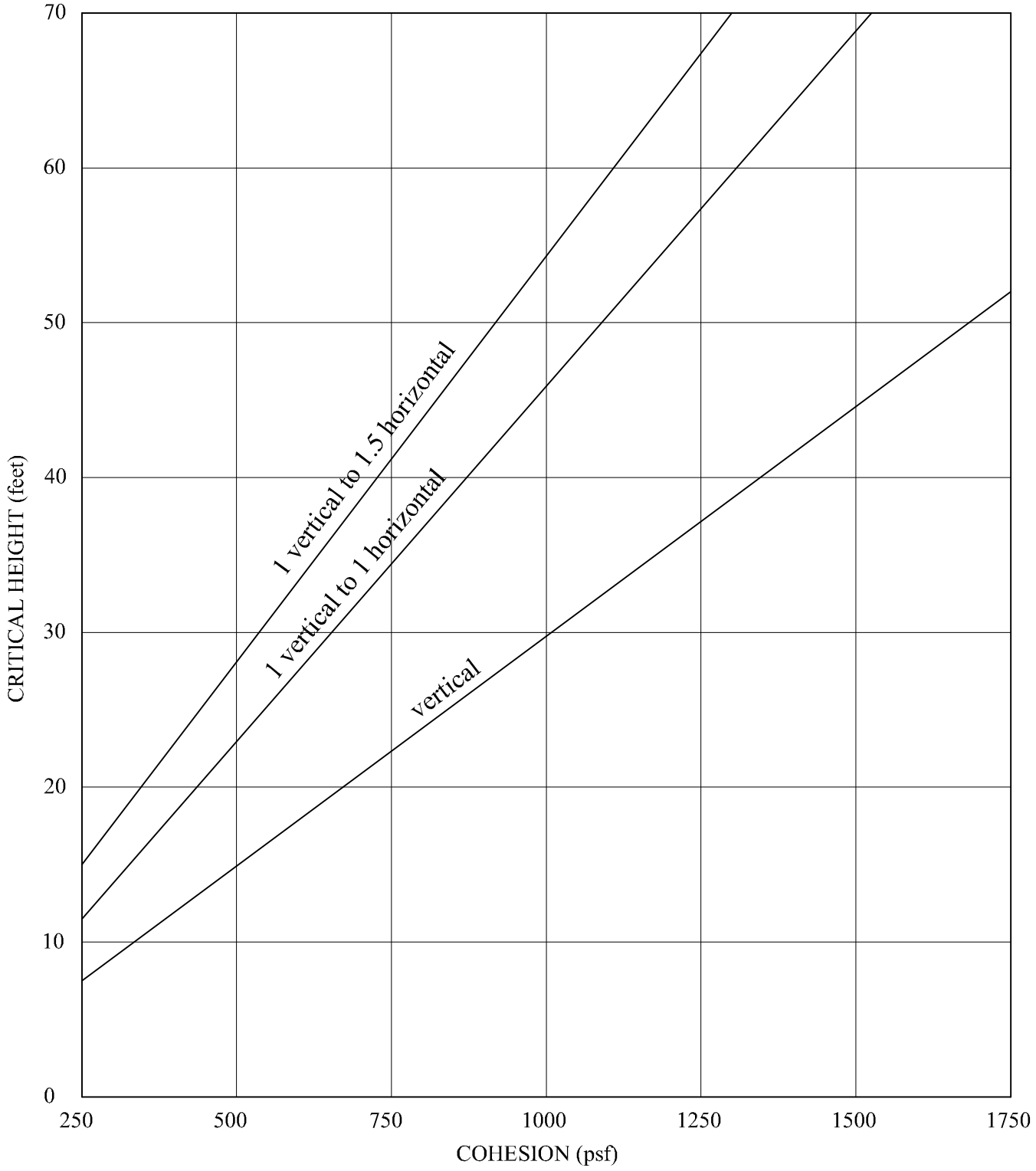

Note: The charts are calculated based on NAVFAC DM7.1, Page 7.1-319, assuming the critical circles are toe circles, and wet unit weight of soils = 125pcf.

AYLES ENGINEERING CORP.

MAXIMUM ALLOWABLE SLOPES

	SHORT TERM	LONG TERM
TYPE A SOILS	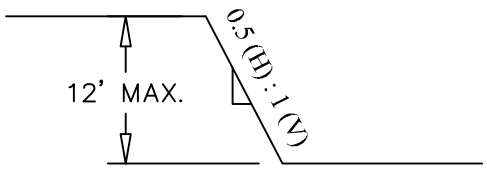	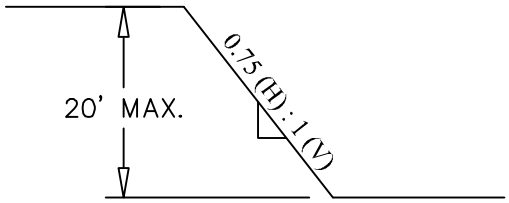
TYPE B SOILS	N/A	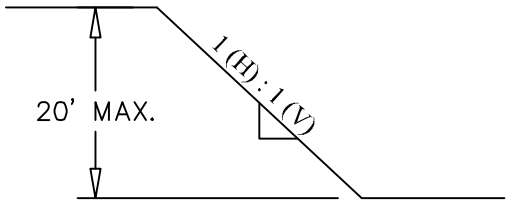
TYPE C SOILS	N/A	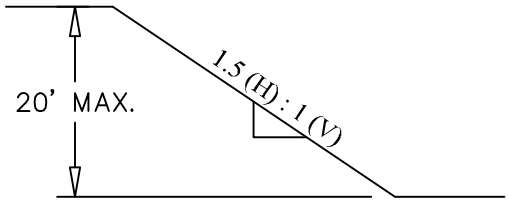

NOTES:

(1) For Type A soils, a short term maximum allowable slope of 0.5 (H) : 1 (V) is allowed in excavations that are 12 feet or less in depth; short term (24 hours or less) maximum allowable slopes for excavations greater than 12 feet in depth shall be 0.75 (H) : 1 (V).

(2) Maximum depth for above slopes is 20 feet. For slopes deeper than 20 feet, trench protection should be designed by the Contractor's professional engineer.

Reference: OSHA, Safety and Health Regulations for Construction, 1926 Subpart P.

AYLES ENGINEERING CORP.

A COMBINATION OF BRACING AND OPEN CUTS

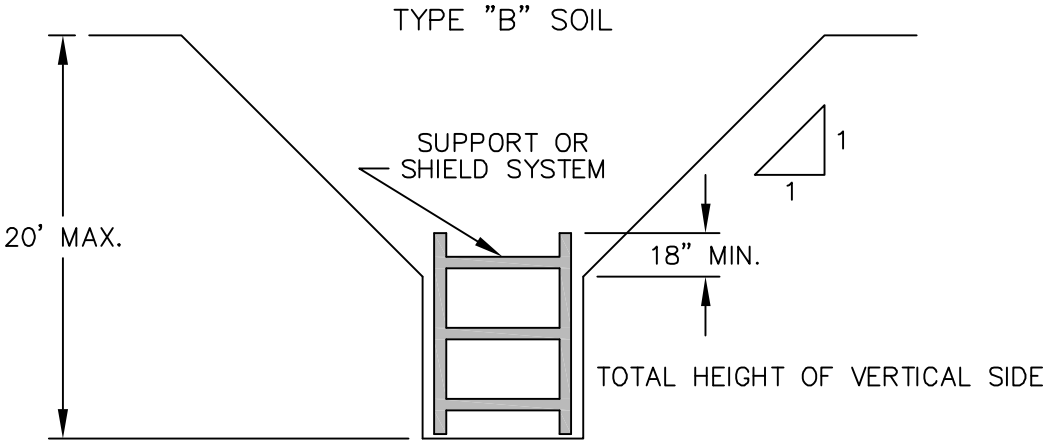

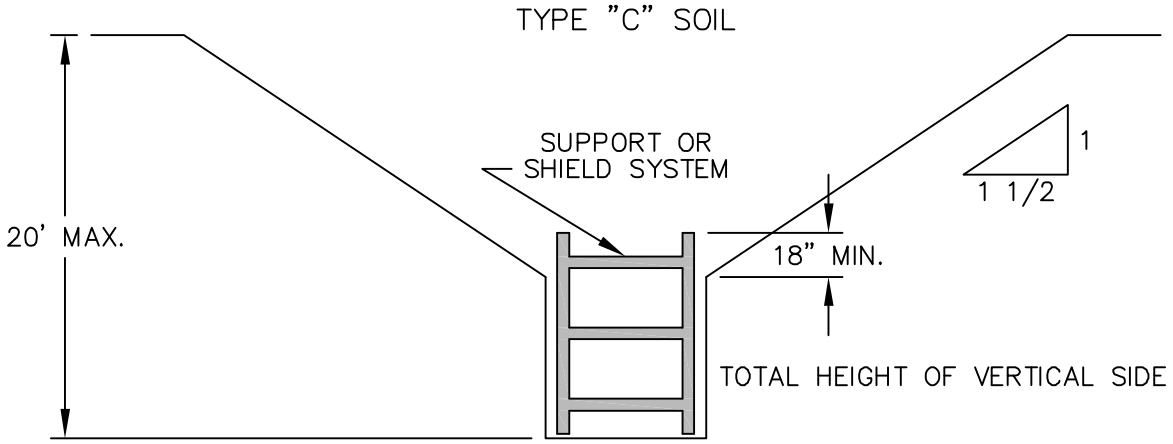

Reference: OSHA, Safety and Health Regulations for Construction, 1926 Subpart P.

AYLES ENGINEERING CORP.

LATERAL PRESSURE DIAGRAMS
FOR OPEN CUTS IN COHESIVE SOIL - LONG TERM CONDITIONS

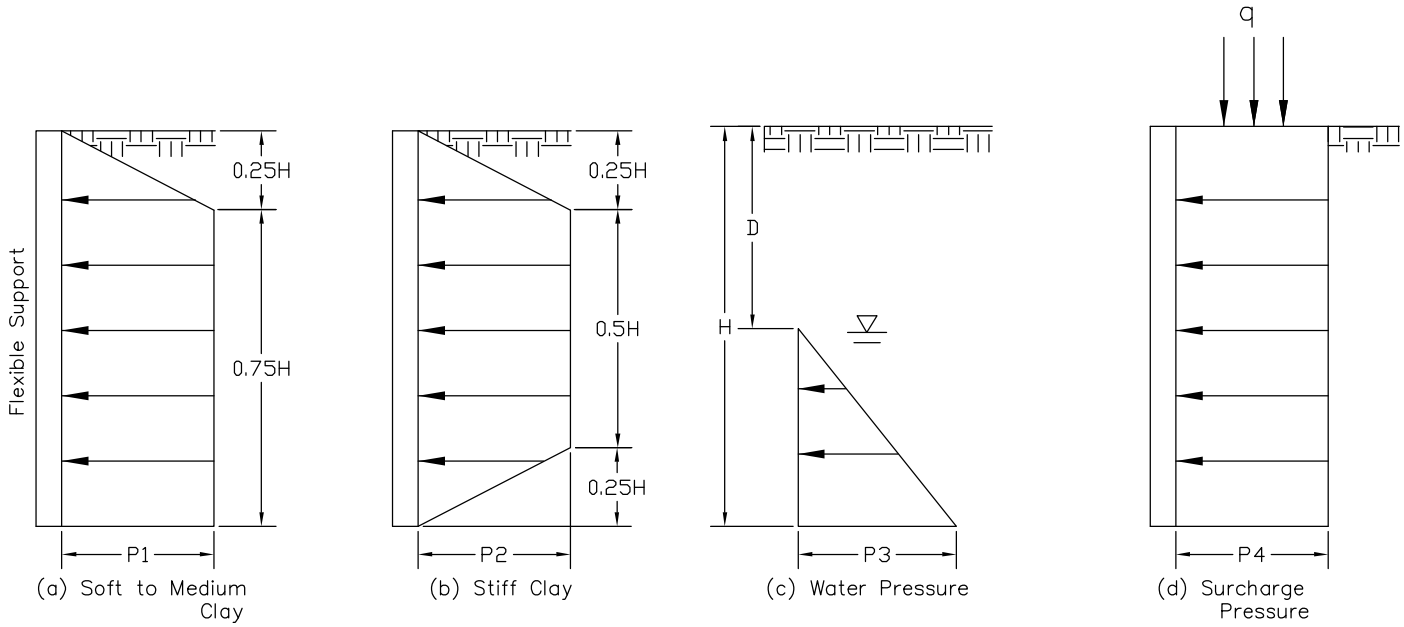

Empirical Pressure Distributions

Where:
H = Total excavation depth, feet
D = Depth to water table, feet
P1 = Lateral earth pressure = γH-4C, psf
P2 = Lateral earth pressure = 0.4γH, psf
P3 = Water pressure = γ_w (H-D), psf
P4 = Lateral earth pressure caused by surcharge = qK_a, psf
γ = Effective unit weight of soil, pcf
γ_w = Unit weight of water, pcf
C = Drained shear strength or cohesion, psf
K_a = Coefficient of active earth pressure

Notes:
1. All pressures are additive.
2. No safety factors are included.
3. For use only during long term construction.
4. If $\gamma H/C < 4$, use section (b),
   If $4 < \gamma H/C < 6$, use larger of section (a) or (b),
   If $\gamma H/C > 6$, use section (a).

Reference: Peck, R.B. (1969), "Deep Excavation and Tunneling in soft Ground", 7th ICSMFE, State of art volume, pp. 225-290.

ENGINEERING CORP.

LATERAL PRESSURE DIAGRAMS
FOR OPEN CUTS IN COHESIVE SOIL - SHORT TERM CONDITIONS

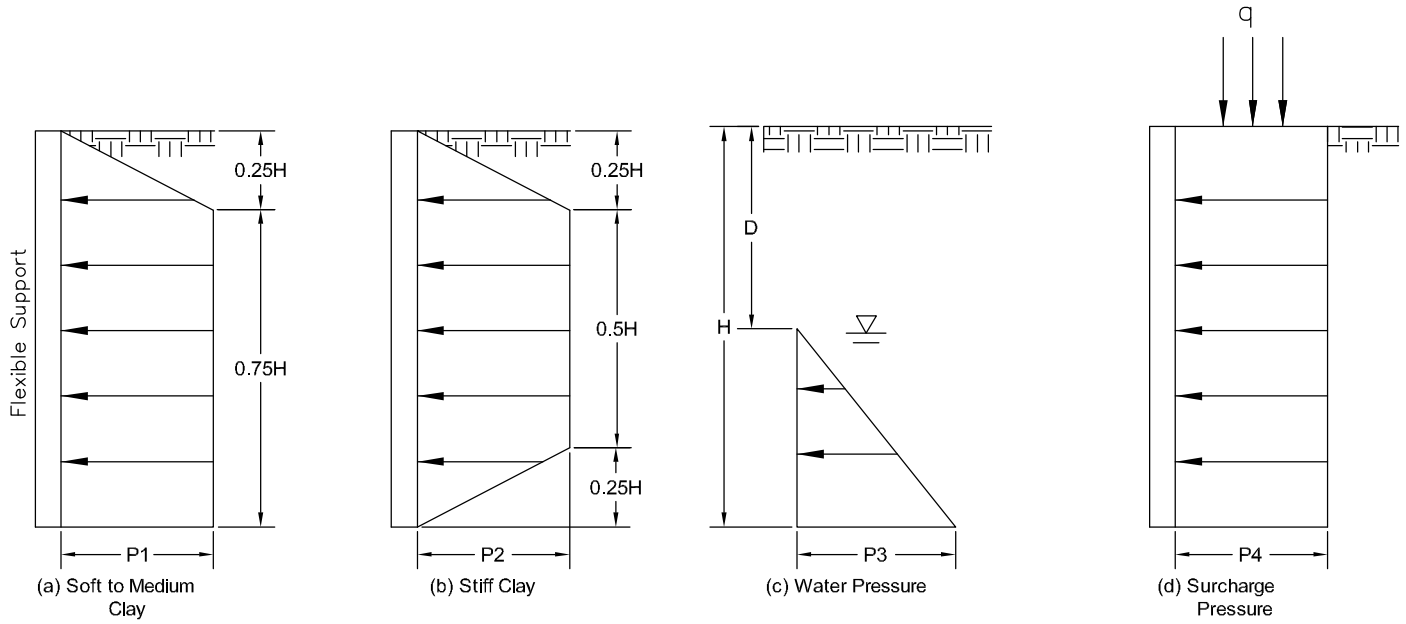

Empirical Pressure Distributions

Where:
H = Total excavation depth, feet
D = Depth to water table, feet
P1 = Lateral earth pressure = $\gamma H - 4S_u$, psf
P2 = Lateral earth pressure = $0.2\gamma H$, psf
P3 = Water pressure = γ_w (H-D), psf
P4 = Lateral earth pressure caused by surcharge = qK_a, psf
γ = Effective unit weight of soil, pcf
γ_w = Unit weight of water, pcf
S_u = Undrained shear strength = $q_u/2$, psf
q_u = Unconfined compressive strength, psf
K_a = Coefficient of active earth pressure

Notes:
1. All pressures are additive.
2. No safety factors are included.
3. For use only during short term construction.
4. If $\gamma H/S_u < 4$, use section (b),
   If $4 < \gamma H/S_u < 6$, use larger of section (a) or (b),
   If $\gamma H/S_u > 6$, use section (a).

Reference: Peck, R.B. (1969), "Deep Excavation and Tunneling in soft Ground", 7th ICSMFE, State of art volume, pp. 225-290.

AYLES ENGINEERING CORP.

LATERAL PRESSURE DIAGRAMS
FOR OPEN CUTS IN SAND

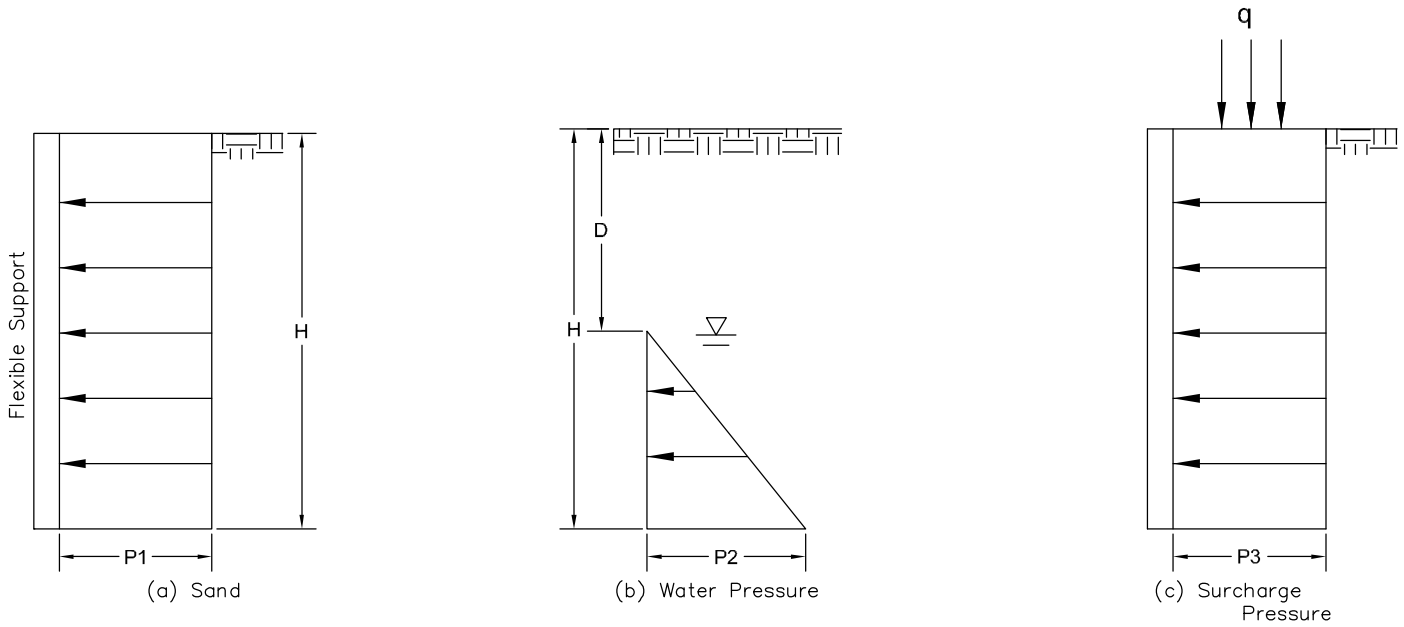

Empirical Pressure Distributions

Where:
H = Total excavation depth, feet
D = Depth to water table, feet
P1 = Lateral earth pressure = $0.65*\gamma HK_a$, psf
P2 = Water pressure = γ_w (H-D), psf
P3 = Lateral earth pressure caused by surcharge = qK_a, psf
γ = Effective unit weight of soil, pcf
γ_w = Unit weight of water, pcf
K_a = Coefficient of active earth pressure = $(1-\sin\varphi)/(1+\sin\varphi)$
φ = Drained friction angle

Notes:
1. All pressures are additive.
2. No safety factors are included.

Reference: Peck, R.B. (1969), "Deep Excavation and Tunneling in soft Ground", 7th ICSMFE, State of art volume, pp. 225-290.

BOTTOM STABILITY FOR BRACED EXCAVATION IN CLAY

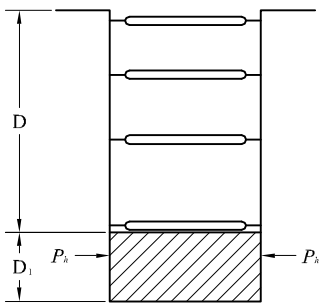

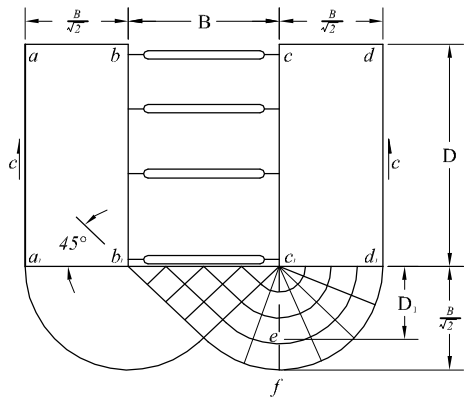

Factor of Safety against bottom of heave,

$$F.S = \frac{NcC}{(\gamma D+q)}$$

where, Nc = Coefficient depending on the dimension of the excavation (see Figure at the bottom)
C = Undrained shear strength of soil in zone immediately around the bottom of the excavation,
γ = Unit weight of soil,
D = Depth of excavation,
q = Surface surcharge.

If F.S < 1.5, sheeting should be extended further down to achieve stability

$$\textit{Depth of Buried Length, } (D_1) = \frac{1.5(\gamma D+q)-NcC}{(C/B)-0.5\gamma} \; ; D_1 \geq 5\ ft.$$

Pressure on buried length, P_h:

For $D_1 < 0.47B$; $P_h = 1.5\ D_1(\gamma D - 1.4\ CD/B - 3.14C)$

For $D_1 > 0.47B$; $P_h = 0.7\ (\gamma DB - 1.4\ CD - 3.14CB)$

where; B = width of excavation

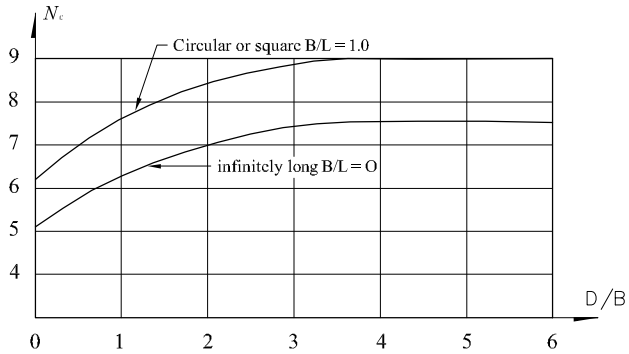

N_c rectangular = $(0.84 + 0.16B/L)N_c$ square

Reference: Bjerrum, L. and Eide, O., Stability of Strutted Excavations in Clay, Geotechnique, 6, 32-47 (1956).

AYLES ENGINEERING CORP.

BUOYANT UPLIFT RESISTANCE FOR BURIED STRUCTURES

(a) WALL / SOIL FRICTION PLUS STRUCTURAL WEIGHT

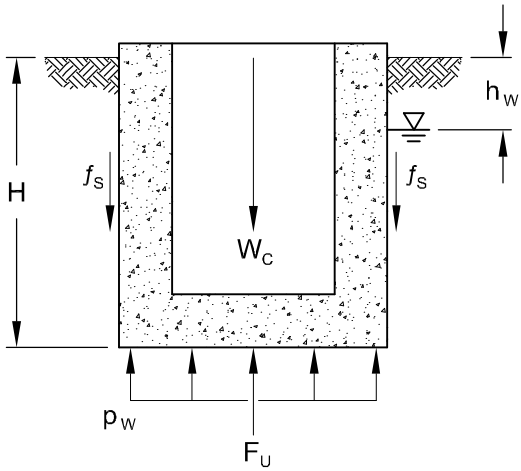

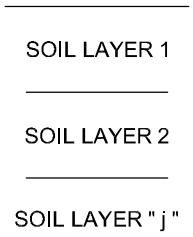

(b) SOIL WEIGHT ABOVE BASE EXTENSION

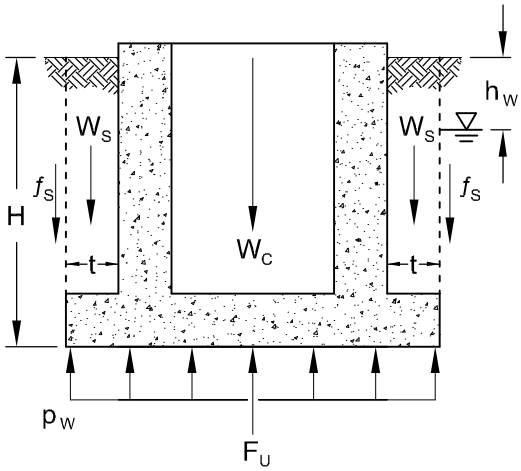

cohesive soils: $f_{S_j} = \alpha\ c_j \leq 3{,}000$ psf

cohesionless soils: $f_{S_j} = 0.75\ K_S\ \sigma_{V_j} \tan\delta_j$

$$Q_S = P_S \sum f_{S_j}\ h_j$$

$$\frac{W_C}{S_{f_a}} + \frac{Q_S}{S_{f_b}} \geq F_U$$

cohesive soils: $f_{S_j} = c_j \leq 3{,}000$ psf

cohesionless soils: $f_{S_j} = 0.75\ K_S\ \sigma_{V_j} \tan\Phi_j$

$$Q_S = P_S \sum f_{S_j}\ h_j$$

$$\frac{W_C}{S_{f_a}} + \frac{Q_S}{S_{f_b}} + \frac{W_S}{S_{f_c}} \geq F_U$$

Where:

A_B = area of base, sq. ft.
H = buried height of structure, ft.
h_W = depth to water table, ft.
p_W = $\gamma_W (H - h_W)$, unit hydrostatic uplift, psf.
γ_W = 62.4 pcf, unit weight of water
F_U = $p_W A_B$, hydrostatic uplift force, lbs.
f_{S_j} = unit frictional resistance of soil layer " j ", psf.
c_j = undrained cohesion of soil layer " j ", psf.
α = 0.55, cohesion factor between soil and structure wall
σ_{V_j} = effective overburden pressure at midpoint of soil layer " j ", psf.
δ_j = 0.75 Φ_j, friction angle between soil layer " j " and concrete wall, degrees
Φ_j = internal angle of friction of soil layer " j ", degrees
K_S = 0.4, coefficient of lateral pressure
h_j = thickness of soil layer " j ", ft.
j = 1, 2, ...
P_S = perimeter of structure base, ft.
Q_S = ultimate skin friction, lbs.
W_C = weight of structure, lbs.
W_S = weight of backfill above base extension, lbs.
S_{f_a} = 1.1, factor of safety for dead weight of structure
S_{f_b} = 3.0, factor of safety for soil / structure friction
S_{f_c} = 1.5, factor of safety for soil weight above base extension
t = width of base extension, ft.

NOTE: neglect f_S in upper 5 feet for expansive clay with a plasticity index > 20.

Reference:

1) *American Concrete Pipe Association, (1996), Manhole Floatation*
2) *O'Neill, M.W., and Reese, L.C., (1999), "Drilled Shafts: Construction Procedures and Design Methods", FHWA-IF-99-025*