Document 00910

ADDENDUM NO. __1___

Date of Addendum: __12/09/2015_____

PROJECT NAME: Missouri Kansas Texas Trail Spur Connector

PROJECT NO: WBS No. N-320420-030A-4

BID DATE: 12/17/2015 (There is no change to the Bid Date.)

FROM: Tim Lincoln, P.E., City Engineer
City of Houston
Department of Public Works and Engineering
611 Walker 15th Floor
Houston, Texas 77002
Attn: Raymond Fong, Project Manager

STATE OF TEXAS
BRADLEY R. BROWN
58842
REGISTERED
PROFESSIONAL ENGINEER

12 / 0 8 /15

TO: Prospective Bidders

This Addendum forms a part of the Bidding Documents and will be incorporated into the Contract documents, as applicable. Insofar as the original Project Manual and Drawings are inconsistent, this Addendum governs.

This Addendum uses the change page method: remove and replace or add pages, or Drawing sheets, as directed in the change instructions below. Change bars (|) are provided in the outside margins of pages from the Project Manual to indicate where changes have been made; no change bars are provided in added Sections. Reissued Drawing Sheets show the Addendum number below the title block and changes in the Drawing are noted by a revision mark and enclosed in a revision cloud.

CHANGES TO PROJECT MANUAL

CONTRACT FORMS

1. Remove “Document 00010-T Table of Contents” in its entirety from the originally issued Project Manual for bid and replace it with the attached revised “00010-T Document Table of Contents”.

2. Remove the following TxDOT Special Provisions in their entirety from the originally issued Project Manual:

a. SPE 000---001 SCHEDULE OF LIQUIDATED DAMAGE
b. SPE 000---002 NONDISCRIMINATION
c. SPE 000---003 CERTIFICATION OF NONDISCRIMINATION IN EMPLOYMENT
d. SPE 000---005 STANDARD FEDERAL EQUAL EMPLOYMENT CONSTRUCTION
e. SPE 000---006 ON THE JOB TRAINING PROGRAM
f. SPE 000---010 IMPORTANT NOTICE OF CONTRACTORS
g. SPE 003---005 AWARD OF EXECUTION OF CONTRACT
h. SPE 006---001 CONTROL OF MATERIALS
i. SPE 007---001 LEGAL RELATIONS AND RESPONSIBILITIES
j. SPE 007---003 LEGAL RELATIONS AND RESPONSIBILITIES
k. SPE 008---003 PROSECUTION AND PROGRESS

3. Remove “Document 00410 Bid Form, Part B” in its entirety from the originally issued Project Manual for bid and replace it with the attached revised “Document 00410 Bid Form, Part B”.

4. Remove “Document 00800-T TxDOT Supplementary Conditions” in its entirety from the originally issued Project Manual for bid and replace it with the attached revised “Document 00800-T TxDOT Supplementary Conditions”.

SPECIFICATIONS

5. Add the following attached TxDOT Standard Specifications for Construction to the originally issued Project Manual:

a. 161 COMPOST
b. 162 SODDING FOR EROSION CONTROL
c. 166 FERTILIZER
d. 168 VEGATATIVE WATERING
e. 404 DRIVING PILING
f. 407 STEEL PILING

g. 421 HYDRAULIC CEMENT CONCRETE
h. 422 CONCRETE SUPERSTRUCTURES
I. 424 PRECAST CONCRETE STRUCTURAL MEMBERS
j. 427 SURFACE FINISHES FOR CONCRTE
k. 440 REINFORCEMENT FOR CONCRETE
l. 441 STEEL STRUCTURES
m. 442 METAL FOR STRUCTURES
n. 447 STRUCTURAL BOLTING
o. 448 STRUCTURAL FIELD WELDING
p. 449 ANCHOR BOLTS
q. 556 PIPE UNDERDRAINS

6. Remove “Document 01110 Summary of Work” in its entirety from the originally issued Project Manual for bid and replace it with the attached revised “Document 01110 Summary of Work”.

7. Add attached City of Houston Specification “01292 Schedule of Values” to the originally issued Project Manual.

8. Add attached City of Houston Specification “01326 Construction Schedule (Bar Chart)” to the originally issued Project Manual.

9. Add attached City of Houston Specification “01782 Operations and Maintenance Data” to the originally issued Project Manual.

CHANGES TO DRAWINGS

10. Remove the Title Sheet, Drawing 1, and replace with the attached Drawing 1. MWSBE 6% is replaced with DBE 5%.

11. Remove Index Sheet, Drawing 2, and replace with the attached Drawing 2. Sheets 21A and 21B are added to the index.

12. Remove Typical Sections, Drawing 5, and replace with the attached Drawing 5. Some callouts and station numbers have changed.

13. Remove Summary of Quantities, Drawing 8, and replace with the attached Drawing 8. Some items have been added or deleted and some quantities have changed.

14. Remove Plan and Profile STA 0+00 to STA 3+00, Drawing 11, and replace with the attached Drawing 11. Some callouts have changed.

15. Remove Plan and Profile STA 3+00 to STA 6+00, Drawing 12, and replace with the attached Drawing 12. Some callouts have changed and the retaining wall drilled shafts have been replaced with sheet piling.

16. Remove Concrete Block Retaining Wall Details, Drawing 19, and replace with the attached Drawing 19. The retaining wall section details have changed.

END OF ADDENDUM NO. 1

DATED: _____
Ravi Kaleyatodi, P.E., CPM
Senior Assistant Director
Department of Public Works
and Engineering

END OF DOCUMENT

Document 00911

NOTICE OF
ADDENDUM NO. 1

Date of Addendum: 12/09/15

PROJECT NAME: Missouri Kansas Texas Trail Spur Connector

PROJECT NO: WBS No. N-320420-030A-4

BID DATE: 12/17/2015 (There is no change to the Bid Date.)

FROM: Tim Lincoln, P.E., City Engineer
City of Houston
Department of Public Works and Engineering
611 Walker 15th Floor
Houston, Texas 77002
Attn: Raymond Fong, Project Manager

TO: Prospective Bidders

STATE OF TEXAS
BRADLEY R. BROWN
58842
REGISTERED
PROFESSIONAL ENGINEER

12/08/15

The referenced Addendum forms a part of the Bidding Documents and will be incorporated into the Contract documents, as applicable.

Written questions regarding this Addendum may be submitted to the Project Manager following the procedures specified in Document 00200 – Instructions to Bidders. Immediately notify the City Engineer through the named Project Manager upon finding discrepancies or omissions in the Bid Documents.

DATED:

Ravi Kaleyatodi, P.E., CPM
Senior Assistant Director
Department of Public Works and Engineering

END OF DOCUMENT

Doc. No.	Document Title	Doc. Date

Document 00010-T

TABLE OF CONTENTS

NOTE: Bold capitalized Specification Sections are included in the City of Houston Department of Public Works and Engineering Standard Construction Specifications for Wastewater Collection Systems, Water Lines, Storm Drainage, Street Paving, and Traffic located here: **http://documents.publicworks.houstontx.gov/document-center/cat_view/88-engineering-and-construction/92-specifications/208-division-02-16-standard-specifications.html**; and are incorporated in Project Manuals by reference as if copied verbatim. Documents listed "for filing" are to be provided by Bidder and are not included in this Project Manual unless indicated for example only. The Document numbers and titles hold places for actual documents to be submitted by Contractor during Bid, post-bid, or construction phase of the Project. Specification Sections marked with an asterisk (*) are amended by a supplemental specification, printed on blue paper and placed in front of the Specification it amends. Documents in the 200, 300 and 400 series of Division 00, except for Document 00410B – Bid Form, Part B, are not part of the Contract.

Doc. No.	Document Title	Doc. Date
	INTRODUCTORY INFORMATION	
00010-T	TxDOT Table of Contents	08-01-2015
00015	List of Drawings	02-01-2004
00041	List of Pre-qualified Asbestos & Lead Abatement Contractors ..	03-21-2012
00042	List of Designated Subcontractors and Suppliers	02-01-2004
	BIDDING REQUIREMENTS	
INSTRUCTIONS TO BIDDERS		
00200	Instructions to Bidders	.08-01-2015
00210-T	TxDOT Supplementary Instructions to Bidders	.08-01-2015
00220	Request for Bid Information	02-08-2011
INFORMATION AVAILABLE TO BIDDERS		
00320	Geotechnical Information	09-02-2005
BID FORMS AND SUPPLEMENTS		
00410	Bid Form, Parts A & B	.08-01-2015
00430	Bidder's Bond (For filing; Example Form)	02-01-2004
00452	Contractor Submission List - Fair Campaign Ordinance	04-30-2004
00453	Bidders Statement of Residency	02-01-2004
00454	Affidavit of Non-interest	02-01-2004

Doc. No.	Document Title	Doc. Date
00455	Affidavit of Ownership or Control	09-04-2007
00456	Bidder's Certificate of Compliance with Buy American Program	02-01-2004
00457	Conflict of Interest Questionnaire	02-28-2006
00458	Bidder's Certificate Regarding Foreign Trade Restriction	02-01-2004
00459	Contractor's Statement Regarding Previous Contracts Subject to EEO	02-01-2004

POST-BID PROCEDURES

00495-T	Post-bid Procedures for TxDOT Funded Projects	08-01-2013

CONTRACTING REQUIREMENTS

AGREEMENT

00501	Resolution of Contractor	02-01-2010
00520-T	Agreement	07-01-2013

BONDS AND CERTIFICATES

00600-T	List of Proposed Subcontractors and Suppliers, Parts A & B	03-25-2013
00601	Drug Policy Compliance Agreement	02-01-2004
00602	Contractor's Drug Free Workplace Policy (For filing)	
00603	Checklist for Drug Policy Submittal	02-09-2012
00604	History of OSHA Actions and List of On-the-job Injuries	02-01-2004
00605	List of Safety Impact Positions	02-01-2004
00606	Contractor's Certification of No Safety Impact Positions	02-01-2004
00607	Certification Regarding Debarment, Suspension, and Other Responsibility Matters	02-01-2004
00610	Performance Bond	05-17-2005
00611	Statutory Payment Bond	05-17-2005
00612T	One Year Warranty of Work Bond	04-10-2013
00620	Affidavit of Insurance (with attached Certificates of Insurance)	02-01-2004
00622	Name and Qualifications of Proposed Superintendent (For filing)	
00624	Affidavit of Compliance with Affirmative Action Program	02-01-2004
00633	Equal Employment Opportunity - Certification By Material Suppliers	02-01-2010
00642	Monthly Subcontractor Payment Reporting Form	02-01-2010
00646	Payment Notification Explanation of Withholding	02-01-2010

Doc. No.	Document Title	Doc. Date
GENERAL CONDITIONS		
00700	General Conditions	08-01-2015
SUPPLEMENTARY CONDITIONS		
00800-T	TxDOT Supplementary Conditions	08-15-2015
00806-T	Disadvantaged Business Enterprise Program Requirements	03-31-2012
00812	Federal Wage Rate - Heavy	05-01-2012
00851	Buy America Requirements…….....	05-21-2012
00852	Changed Conditions…	08-01-2011
ADDENDA AND MODIFICATIONS		
00910	Addendum	02-01-2004
00911	Notice of Addendum	02-01-2004
00912	Rider	05-15-2009
00931	Request for Information……	02-01-2004
TXDOT SPECIAL PROVISIONS		
~~SPE 000---001~~	~~Schedule of Liquidated Damage~~	Delete I
~~SPE 000---002~~	~~Nondiscrimination~~	Delete I
~~SPE 000---003~~	~~Certification of Nondiscrimination in Employment~~	Delete I
SPE 000---004	Notice of Requirement for Affirmative Action to Ensure Equal Employment Opportunity	
~~SPE 000---005~~	~~Standard Federal Equal Employment Construction~~	Delete I
~~SPE 000---006~~	~~On the Job Training Program~~	Delete I
SPE 000---007	Disadvantaged Business Enterprise in Federal Aid Contracts	
~~SPE 000---010~~	~~Important Notice of Contractors~~	Delete I
~~SPE 003---005~~	~~Award of Execution of Contract~~	Delete I
~~SPE 006---001~~	~~Control of Materials~~	Delete I
~~SPE 007---001~~	~~Legal Relations and Responsibilities~~	Delete I
~~SPE 007---003~~	~~Legal Relations and Responsibilities~~	Delete I
~~SPE 008---003~~	~~Prosecution and Progress~~	Delete I
SPE 506---002	Temporary Erosion, Sedimentation, and Environmental Controls	
SUPPLEMENTAL ITEMS AND SPECIFICATIONS		
TxDOT STANDARD SPECIFICATIONS FOR CONSTRUCTION		
161	COMPOST	Add I
162	SODDING FOR EROSION CONTROL	Add I
166	FERTILIZER	Add I

Doc. No.	Document Title	Doc. Date	
168	VEGATATIVE WATERING	Add	I
404	DRIVING PILING	Add	I
407	STEEL PILING	Add	I
416	DRILLED SHAFT FOUNDATIONS		
420	CONCRETE SUBSTRUCTURES		
421	HYDRAULIC CEMENT CONCRETE	Add	I
422	CONCRETE SUPERSTRUCTURES	Add	I
423	RETAINING WALLS		
424	PRECAST CONCRETE STRUCTURAL MEMBERS	Add	I
427	SURFACE FINISHES FOR CONCRETE	Add	I
440	REINFORCEMENT FOR CONCRETE	Add	I
441	STEEL STRUCTURES	Add	I
442	METAL FOR STRUCTURES	Add	I
447	STRUCTURAL BOLTING	Add	I
448	STRUCTURAL FIELD WELDING	Add	I
449	ANCHOR BOLTS	Add	I
450	RAILING		
556	PIPE UNDERDRAINS	Add	I

SPECIAL PROVISIONS

SS–9007	PREFABRICATED PEDESTRIAN STEEL TRUSS BRIDGE

Doc. No.	Document Title	Doc. Date	
	SPECIFICATIONS		
DIVISION 1 - GENERAL REQUIREMENTS			
01110	Summary of Work	06-27-2005	
01145	Use of Premises	01-01-2011	
01255	Change Order Procedures	08-01-2003	
01270	Measurement and Payment	08-01-2003	
01292	Schedule of Values	08-01-2003	Add **I**
01312	Coordination and Meetings	08-01-2003	
01321	Construction Photographs	08-01-2003	
01325	Construction Schedule	08-01-2003	
01326	Construction Schedule (Bar Chart)	08-01-2003	Add **I**
01330	Submittal Procedures	08-01-2003	
01340	Shop Drawings, Product Data, and Samples	08-01-2003	
01351	Environmental Safety and Worker Protection	01-01-2011	
01410	TPDES Requirements (with Attachments)	02-01-2011	
01422	Reference Standards	08-01-2003	
01450	Contractor's Quality Control	08-01-2003	
01452	Inspection Services	08-01-2003	
01454	Testing Laboratory Services	08-01-2003	
01502	Mobilization	08-01-2008	
01504	Temporary Facilities and Controls	01-01-2011	
~~01506~~	~~Diversion Pumping~~	~~08-01-2003~~	Delete **I**
01520	Temporary Field Office	02-08-2012	
~~*01555S~~	~~*Traffic Control and Regulation*~~	~~*04-22-2009*~~	Delete **I**
*01555	Traffic Control and Regulation	01-01-2011	
~~01562~~	~~Tree and Plant Protection~~	~~01-01-2011~~	Delete **I**
01570	Storm Water Pollution Control	01-26-2012	
01575	Stabilized Construction Access	02-01-2011	
01576	Waste Material Disposal	08-01-2003	
01578	Control of Ground and Surface Water	01-01-2011	
01580	Project Identification Signs	08-01-2003	
01581	Excavation in Public Way Permit Signs	08-01-2003	
01610	Basic Product Requirements	01-01-2011	
01630	Product Substitution Procedures	08-01-2003	
01725	Field Surveying	01-01-2011	
01731	Cutting and Patching	01-01-2011	
~~01732~~	~~Procedure for Water Valve Assistance (with Attachments)~~	~~08-01-2003~~	Delete **I**
01740	Site Restoration	08-01-2003	
~~01755~~	~~Starting Systems~~	~~08-01-2003~~	Delete **I**
01770	Closeout Procedures	08-01-2003	
01782	Operations and Maintenance Data	08-01-2003	Add **I**

Doc. No.	Document Title	Doc. Date
01785	Project Record Documents	08-01-2003
DIVISION 2 - SITE WORK		
02081	**CAST-IN-PLACE CONCRETE MANHOLES**	**01-01-2011**
02082	**PRECAST CONCRETE MANHOLES**	**01-01-2011**
02083	**FIBERGLASS MANHOLES**	**01-01-2011**
02084	**FRAMES, GRATES, RINGS, AND COVERS**	**08-01-2008**
02085	**VALVE BOXES, METER BOXES, AND METER VAULTS**	**01-01-2011**
02086	**ADJUSTING MANHOLES, INLETS, AND VALVE BOXES TO GRADE**	**01-01-2011**
02087	**BRICK MANHOLE FOR STORM SEWERS**	**10-01-2002**
02136	**WASTE MATERIAL HANDLING, TESTING AND DISPOSAL**	**01-01-2011**
02201	**SITE PREPARATION, GRADING, RESTORATION AND CLEAN UP FOR WATER STORAGE TANKS**	**01-01-2011**
02221	**REMOVING EXISTING PAVEMENTS AND STRUCTURES**	**07-01-2009**
02222	**ABANDONMENT OF SEWERS**	**01-01-2011**
02233	**CLEARING AND GRUBBING**	**01-01-2011**
02260	**TRENCH SAFETY SYSTEM**	**02-01-2011**
02315	**ROADWAY EXCAVATION**	**07-01-2009**
02316	**EXCAVATION AND BACKFILL FOR STRUCTURES**	**01-01-2011**
02317	**EXCAVATION AND BACKFILL FOR UTILITIES**	**01-01-2011**
02318	**EXTRA UNIT PRICE WORK FOR EXCAVATION AND BACKFILL**	**01-01-2011**
02319	**BORROW**	**01-01-2011**
02320	**UTILITY BACKFILL MATERIALS**	**01-01-2011**
02321	**CEMENT STABILIZED SAND**	**01-01-2011**
02322	**FLOWABLE FILL**	**08-01-2008**
02330	**EMBANKMENT**	**10-01-2002**
02336	**LIME-STABILIZED SUBGRADE**	**10-01-2002**
02337	**LIME/FLY-ASH STABILIZED SUBGRADE**	**10-01-2002**
02338	**PORTLAND CEMENT STABILIZED SUBGRADE**	**10-01-2002**
02340	**COMPACTED SANDFILL UNDER TANK FLOOR PLATE**	**01-01-2011**
02400	**TUNNEL SHAFTS**	**01-01-2011**
02401	**COMMON TUNNEL SHAFTS**	**01-01-2011**
02425	**TUNNEL EXCAVATION AND PRIMARY LINER**	**10-01-2002**
02426	**SEWER LINE IN TUNNELS**	**10-01-2002**
02427	**PLASTIC LINER FOR LARGE-DIAMETER CONCRETE SEWERS AND STRUCTURES**	**10-01-2002**
02431	**TUNNEL GROUT**	**10-01-2002**
02441	**MICROTUNNELING AND PIPE-JACKED TUNNELS**	**01-01-2011**
02447	**AUGERING PIPE AND CONDUIT**	**10-01-2002**
02448	**PIPE AND CASING AUGERING FOR SEWERS**	**10-01-2002**

Doc. No.	Document Title	Doc. Date
02465	DRILLED SHAFT FOUNDATIONS	10-01-2002
02476	CAISSON FOR LIFT STATION	01-01-2011
02501	DUCTILE IRON PIPE AND FITTINGS	02-01-2011
02502	STEEL PIPE AND FITTINGS	01-01-2011
02503	COPPER TUBING	10-01-2002
02504	CENTRIFUGALLY CAST FIBERGLASS PIPE	02-01-2011
02505	HIGH DENSITY POLYETHYLENE (HDPE) SOLID AND PROFILE WALL PIPE	02-01-2011
02506	POLYVINYL CHLORIDE PIPE	01-01-2011
02507	PRESTRESSED CONCRETE CYLINDER PIPE	01-01-2011
02508	EXTRA STRENGTH CLAY PIPE	02-01-2011
02509	FIBERGLASS REINFORCED PIPE FOR PRESSURE MAINS	01-01-2011
02511	WATER LINES	01-01-2011
02512	WATER TAP AND SERVICE LINE INSTALLATION	04-27-2012
02513	WET CONNECTIONS	10-01-2002
02514	DISINFECTION OF WATER LINES	01-01-2011
02515	HYDROSTATIC TESTING OF PIPELINES	01-01-2011
02516	CUT, PLUG, AND ABANDONMENT OF WATER LINES	01-01-2011
02517	WATER LINE IN TUNNELS	10-01-2002
02518	STEEL PIPE AND FITTINGS FOR LARGE-DIAMETER WATER LINES	01-01-2011
02520	FIRE HYDRANTS	05-05-2011
02521	GATE VALVES	01-01-2011
02522	BUTTERFLY VALVES	01-01-2011
02523	PRESSURE REDUCING VALVES	10-01-2002
02524	AIR RELEASE AND VACUUM RELIEF VALVES	01-01-2011
02525	TAPPING SLEEVES AND VALVES	01-01-2011
02526	WATER METERS	01-01-2011
02527	POLYURETHANE COATINGS ON STEEL OR DUCTILE IRON PIPE	10-01-2002
02528	POLYETHYLENE WRAP	01-01-2011
02531	GRAVITY SANITARY SEWERS	01-01-2011
02532	SANITARY SEWER FORCE MAINS	01-01-2011
02533	ACCEPTANCE TESTING FOR SANITARY SEWERS	01-01-2011
02534	SANITARY SEWER SERVICE STUBS OR RECONNECTIONS	01-01-2011
02550	SLIPLINING SANITARY SEWERS	01-01-2011
02553	POINT REPAIR AND OBSTRUCTION REMOVALS	01-01-2011
02555	MANHOLE REHABILITATION	01-01-2011
02557	FOLDED AND FORMED PIPE	01-01-2011
02558	CLEANING AND TELEVISION INSPECTION	01-01-2011
02571	CRUSHING SANITARY SEWERS	01-01-2011
02581	STREET LIGHTING CONDUIT	10-01-2002

Doc. No.	Document Title	Doc. Date
02582	TRAFFIC SIGNAL POLE ASSEMBLIES	07-01-2009
02611	REINFORCED CONCRETE PIPE	02-01-2011
02612	PRECAST REINFORCED CONCRETE BOX SEWERS	10-01-2002
02613	BAR WRAPPED STEEL CYLINDER PIPE	01-01-2011
02621	GEOTEXTILE	10-01-2002
02631	STORM SEWERS	01-26-2012
02632	CAST-IN-PLACE INLETS, HEADWALLS, AND WINGWALLS	10-01-2002
02633	PRECAST CONCRETE INLETS, HEADWALLS, AND WINGWALLS	10-01-2002
02642	CORRUGATED METAL PIPE	10-01-2002
02643	PLATE CULVERT STRUCTURES	10-01-2002
02662	PIPING, VALVES, FITTINGS, AND ACCESSORIES FOR WATER STORAGE TANKS	01-01-2011
02711	HOT MIX ASPHALT BASE COURSE	07-01-2009
02712	CEMENT STABILIZED BASE COURSE	10-01-2002
02713	RECYCLED CRUSHED CONCRETE BASE COURSE	07-01-2009
02714	FLEXIBLE BASE COURSE FOR TEMPORARY DRIVEWAYS	07-01-2009
02741	ASPHALTIC CONCRETE PAVEMENT	07-01-2009
02742	PRIME COAT	10-01-2002
02743	TACK COAT	10-01-2002
02751	CONCRETE PAVING	07-01-2009
~~02752S~~	~~Concrete Pavement Joints~~	~~12-29-2009~~ Delete I
02752	CONCRETE PAVEMENT JOINTS	10-01-2002
02753	CONCRETE PAVEMENT CURING	10-01-2002
02754	CONCRETE DRIVEWAYS	09-01-2002
02761	COLORED CONCRETE FOR MEDIANS AND SIDEWALKS	09-01-2002
02762	BLAST CLEANING OF PAVEMENT	10-01-2002
02764	RAISED PAVEMENT MARKERS	10-01-2002
02765	TEMPORARY AND REMOVABLE REFLECTORIZED PAVEMENT MARKINGS	10-01-2002
02767	THERMOPLASTIC PAVEMENT MARKINGS	10-01-2002
02771	CURB, CURB AND GUTTER, AND HEADERS	10-01-2002
02772	CONCRETE MEDIANS AND DIRECTIONAL ISLANDS	10-01-2002
02775	CONCRETE SIDEWALKS	10-01-2002
02811	LANDSCAPE IRRIGATION	10-01-2002
02893	TRAFFIC SIGNAL CONSTRUCTION	07-01-2009
02911	TOPSOIL	10-01-2002
02912	TREE, PLANT, AND HARDSCAPE PROTECTION	07-01-2009
02915	TREE PLANTING	01-01-2011

Doc. No.	Document Title	Doc. Date
02921	HYDROMULCH SEEDING	01-01-2011
02922	SODDING	07-01-2009
02951	PAVEMENT REPAIR AND RESTORATION	07-01-2009
02960	MILLING PAVEMENT	07-01-2009
02983	REMOVAL AND RESTORATION OF BRICK-PAVED STREETS	10-01-2002
DIVISION 3 - CONCRETE		
03315	CONCRETE FOR UTILITY CONSTRUCTION	10-01-2002
DIVISION 4 - MORTAR		
04061	MORTAR	10-01-2002
04210	BRICK MASONRY FOR UTILITY CONSTRUCTION	10-01-2002
DIVISION 5 - METALS		
05501	METAL FABRICATIONS	01-01-2011
DIVISION 6 - WOOD AND PLASTICS		
DIVISION 7 - THERMAL AND MOISTURE PROTECTION		
DIVISION 8 - DOORS AND WINDOWS		
DIVISION 9 - FINISHES		
09901	PROTECTIVE COATINGS	01-01-2011
09971	HIGH BUILD GLAZED COATINGS	01-01-2011
DIVISION 10 - SPECIALTIES		
DIVISION 11 – EQUIPMENT		
DIVISION 12 - FURNISHINGS		
DIVISION 13 - SPECIAL CONSTRUCTION		
13111	CATHODIC PROTECTION FOR WATER TANK INTERIORS	01-01-2011
13112	CATHODIC PROTECTION FOR WATER TANK INTERIORS(ICCP)	01-01-2011
13113	CATHODIC PROTECTION FOR NEW TANK BOTTOMS	01-01-2011
13201	WELDED STEEL WATER STORAGE TANKS	01-01-2011
13202	REHABILITATION OF WELDED STEEL WATER STORAGE TANKS	01-01-2011
13203	TANK CLEAN-UP AND DISINFECTION	01-01-2011

Doc. No.	Document Title	Doc. Date
DIVISION 14 - CONVEYING SYSTEMS		
DIVISION 15 – MECHANICAL		
15640	JOINT BONDING AND ELECTRICAL ISOLATION	01-01-2011
15641	CORROSION CONTROL TEST STATIONS	01-01-2011
DIVISION 16 – ELECTRICAL		
16010	BASIC ELECTRICAL REQUIREMENTS	01-01-2011
16640	CATHODIC PROTECTION FOR PIPELINES	01-01-2011
16641	CATHODIC PROTECTION FOR EXISTING TANK BOTTOM	01-01-2011
16642	CATHODIC PROTECTION FOR PIPE LINE	01-01-2011
16644	CATHODIC PROTECTION FOR CLARIFIERS	01-01-2011
16645	CATHODIC PROTECTION FOR NEW TANK BOTTOMS	01-01-2011
16709	COMMUNICATIONS CONDUIT	07-01-2009
16710	PULL BOXES	07-01-2009
16711	TRAFFIC SIGNAL CONDUIT	07-01-2009
16715	VEHICLE SIGNAL HEADS	07-01-2009
16716	PEDESTRIAN SIGNAL HEADS	07-01-2009
16717	PROGRAMMABLE VEHICLE SIGNAL HEADS	07-01-2009
16718	LED VEHICLE TRAFFIC SIGNAL MODULE	07-01-2009
16719	COUNTDOWN PEDESTRIAN SIGNAL MODULE	07-01-2009
16720	TRAFFIC SIGNAL CABLE	07-01-2009
16724	EMERGENCY VEHICLE PREEMPTION (EVP)	07-01-2009
16730	ITS CONTROLLER CABINET ASSEMBLY	07-01-2009
16731	MODEL 2070 CONTROLLER UNIT	07-01-2009
16733	MANAGED FIELD HARDENED ETHERNET SWITCH	07-01-2009
16735	FIBER OPTIC SPLICE ENCLOSURE	07-01-2009
16736	FIBER DISTRIBUTION UNIT	07-01-2009
16737	COMMUNICATION SERVICE BOX	07-01-2009
16738	WIRELESS COMMUNICATION SYSTEM	07-01-2009
16740	SINGLE MODE FIBER OPTIC COMMUNICATION SYSTEM	07-01-2009
16742	VIDEO DETECTION SYSTEMS	07-01-2009
16743	CDMA MODEM ASSEMBLY	07-01-2009
16750	ACCESSIBLE PEDESTRIAN PUSH BUTTON STATION	07-01-2009

END OF DOCUMENT

Document 00410B

BID FORM – PART B

1.0 TOTAL BID PRICE HAS BEEN CALCULATED BY BIDDER, USING THE FOLLOWING COMPONENT PRICES AND PROCESS (PRINT OR TYPE NUMERICAL AMOUNTS):

A. STIPULATED PRICE: **$_____**

(Total Bid Price; minus Base Unit Prices, Extra Unit Prices, Cash Allowances and All Alternates, if any)

B. BASE UNIT PRICE TABLE:

Item No.	Spec Ref.	Base Unit Short Title	Unit of Measure	Estimated Quantity	Unit Price (this column controls)	Total in figures
1	01502	MOBILIZATION	LS	1	$75,000(1)	$75,000(1)
2	01554	TRAFFIC SIGN	EA	3		
3	01555	TRAFFIC CONTROL	LS	1	$ _____ ($6,000)2	$ _____ ($6,000)2
4	01570	FILTER FABRIC FENCE	LF	2,300		
5	01570	REINFORCED FILTER FABRIC BARRIER	LF	1,500		
6	01575	STABILIZED CONSTRUCTION EXIT	SY	502		
7	02233	CLEARING AND GRUBBING (INCLUDES TREE REMOVAL)	AC	0.4		
8	02260	TRENCH SAFETY	LF	110		
9	02315	ROADWAY EXCAVATION	CY	1063		
10	02315	EMBANKMENT FILL	CY	353		
11	02336	LIME STABILIZED SUBGRADE	SY	943		
12	02336	HYDRATED LIME	TON	23		
13	02631	4” PVC STORM SEWER	LF	295		

Item No.	Spec Ref.	Base Unit Short Title	Unit of Measure	Estimated Quantity	Unit Price (this column controls)	Total in figures
14	02631	8” PVC DRAIN	LF	426		
15	02361	24” PVC DRAIN	LF	144		
16	02631	RCP CL III (24 IN)	LF	54		
17	02632	HEADWALL (24 IN)	EA	2		
18	02751	6-INCH REINFORCED CONCRETE PAVING	SY	1,048		
19	02751	4-INCH REINFORCED CONCRETE MOW STRIP	SY	38		
20	02767	THERMOPLASTIC PAVEMENT MARKINGS (Y) 4" WIDE	LF	214		
21	TXDOT 161	COMPOST MANURE TOPSOIL	SY	451		
22	TXDOT 162	BLOCK SODDING	SY	777		
23	TXDOT 166	FERTILIZER	AC	0.1		
24	TXDOT 168	VEGETATIVE WATERING	MG	11.2		
25	TXDOT 423 (421) (556)	RETAINING WALL (CONCRETE BLOCK)	SF	4,752		
26	TXDOT 450	RAIL (TYP PR1)	LF	506		
27	TXDOT 407 (441) (442) (404)	SHEET PILING (PZ – 27)	SF	1400		
28	TXDOT 416 (420) (421) (440) (424) (404)	DRILL SHAFT (36 IN) FOR BRIDGE	LF	172		
29	TXDOT 420 (421) (440)	CLASS C CONC (ABUT)	CY	17		
30	TXDOT 422 (421) (440) (427)	APPROACH SLAB	CY	20		
31	SS-9007 (448) (441) (442) (447) (449)	PEDESTRIAN TRUSS BRIDGE (120 FT SPAN)	EA	1		
					TOTAL BASE UNIT PRICES	

Bidder’s Initials [ ]

C. EXTRA UNIT PRICE TABLE:

Item No.	Spec Ref.	Extra Unit Short Title	Unit of Measure	Estimated Quantity	Unit Price (this column controls)	Total in figures
29	02315	EXTRA CEMENT STABILIZED SAND BACKFILL	CY	50	$ _____ ($25.00)[3]	$ _____ ($1,250.00)[3]
30	02318	EXTRA MACHINE EXCAVATION	CY	50	$ _____ ($10.00)[3]	$ _____ ($500.00)[3]
31	02318	EXTRA REPLACEMENT OF BACKFILL MATERIAL	CY	50	$ _____ ($5.00)[3]	$ _____ ($250.00)[3]
32	02318	EXTRA HAND EXCAVATION AROUND OBSTRUCTIONS	CY	50	$ _____ ($15.00)[3]	$ _____ ($750.00)[3]
33	03211	EXTRA GRADE 60 REINFORCING STEEL IN PLACE	TON	0.5	$_____ (1.00)[(2)]	$ _____ (1,000.00)[(2)]
34	03310	EXTRA CLASS "A" CONCRETE INSTALLED IN PLACE FOR STRUCTURES	CY	2	$_____ (600.00)[(2)]	$ _____ (1,200.00)[(2)]
TOTAL EXTRA UNIT PRICES						$_____

D. CASH ALLOWANCE TABLE:

Item No.	Spec Ref.	Cash Allowance Short Title	Cash Allowance in figures [(1)]
35	01145	Permit Fees	$10,000[(1)]
36	01145	USACE Review	$10,000[(1)]
TOTAL CASH ALLOWANCES			$20,000[(1)]

E. TOTAL BID PRICE: $_____

(Add Totals for Items A., B., C. and D. above)

Bidder's Initials [ ]

2.0 SIGNATURES: By signing this Document, I agree that I have received and reviewed all Addenda and considered all costs associated with the Addenda in calculating the Total Bid Price.

Bidder: _____
(Print or type full name of your proprietorship, partnership, corporation, or joint venture.*)

**By: _____
Signature Date

Name: _____
(Print or type name) Title

Address: _____
(Mailing)

_____
(Street, if different)

Telephone and Fax Number: _____
(Print or type numbers)

* If Bid is a joint venture, add additional Bid Form signature sheets for each member of the joint venture.

** Bidder certifies that the only person or parties interested in this offer as principals are those named above. Bidder has not directly or indirectly entered into any agreement, participated in any collusion, or otherwise taken any action in restraint of free competitive bidding.

Note: This document constitutes a government record, as defined by § 37.01 of the Texas Penal Code. Submission of a false government record is punishable as provided in § 37.10 of the Texas Penal Code.

Footnotes for Tables B through E:
(1) Fixed Unit Price determined prior to Bid. Cannot be adjusted by the Bidder.
(2) Minimum Bid Price determined prior to Bid. Can be increased by the Bidder by crossing out the Minimum and noting revised price on the line above.
(3) Maximum Bid Price determined prior to Bid. Can be decreased but not increased by Bidder by crossing out the Maximum and noting revised price on the line above. A Bid that increases the Maximum Bid Price may be found non-conforming and non-responsive.
(4) Fixed Range Bid Price determined prior to Bid. Unit Price can be adjusted by Bidder to any amount within the range defined by crossing out prices noted and noting revised price on the line above.

Document 00800-T

TxDOT SUPPLEMENTARY CONDITIONS

The following Paragraphs amend and supplement the August 15, 2015 edition of General Conditions. Unaltered portions of General Conditions remain in effect.

ARTICLE 1 - GENERAL PROVISIONS:

1.1 *DEFINITIONS*: *Insert the following Paragraph 1.1.9.1*

ARTICLE 3 - THE CONTRACTOR

3.5 *LABOR*: *Insert the following Paragraphs 3.5.3.1.1 and 3.5.3.1.2*

3.5.3.1.1 The Contractor shall make Good Faith Efforts to comply with the State ordinances regarding Disadvantaged Business Enterprises (DBE) participation goals. Overall, the City of Houston goal for DBE contracts is a cumulative goal, with DBE amounts varying from contract to contract. Updated annually in agreement with the Texas Department of Transportation, the goals are currently as follows:

.1 the DBE goal is 5% percent, with

.2 the race-conscious DBE goal of _____ percent

3.5.3.1.2 "Good Faith Efforts" is defined in Document 00806-T, "DISADVANTAGED BUSINESS ENTERPRISE PROGRAM REQUIREMENTS", in accordance with 49 C.F.R. § 26.

3.9 MATERIALS & EQUIPMENT: *Insert the following Paragraph 3.9.4*

3.9.4 Materials produced in a prison facility or by prison labor may not be used on this project.

ARTICLE 8 - TIME

8.1 *PROGRESS AND COMPLETION: Delete Paragraph 8.1.6. and replace with the following 8.1.6. and 8.1.6.1.*

8.1.6.1 Contractor shall credit the City by Change Order for inspection services for overtime work or work performed on Sundays or Legal Holidays. The amount Contractor credits the City will be [$50.00 per hour] [*actual costs*] per inspector for inspection services.

ARTICLE 9 - PAYMENTS AND COMPLETION

9.1 *UNIT PRICE WORK*: *Delete Section 9.1 in its entirety and insert the following Section 9.1.*

9.1 References to Unit Prices in individual Specification sections are not applicable to the Contract. Include payment for portions of the Work required by these sections in the Stipulated Price for the Contract.

9.12 *LIQUIDATED DAMAGES*: *Insert the following Paragraph 9.12.1.1.*

9.12.1.1 The amount of liquidated damages payable by Contractor or Surety for each and every day of delay beyond Contract Time, are $800.00 per day.

ARTICLE 11 - INSURANCE AND BONDS

11.2 INSURANCE TO BE PROVIDED BY CONTRACTOR: Insert the following Paragraph 11.2.1.2

11.2.1.2 Contractor shall purchase for the duration of the Contract the insurance set out in Table 2 in addition to the minimum insurance coverage set out in section 11.2.1.

TABLE 2
ADDITIONAL REQUIRED COVERAGE
DEFENSE COSTS EXCLUDED FROM FACE AMOUNT OF POLICY.

Contractor's Pollution Liability:	$1,000,000 each occurrence
Including pollution coverage for Contractual Liability, Clean-up costs, Abatement, Transport, and Non-owned disposal sites. Including Bodily Injury Liability, Property Damage Liability, and environmental damage arising from pollution conditions caused in performance of operations. Including Asbestos and Lead if part of operations.	
(MCS - 90 endorsement: to Auto Policy and removal of Pollution Exclusion)	$1,000,000 CSL

11.5 MAINTENANCE BONDS: *Delete Section 11.5 in its entirety and insert the following Section 11.5.*

11.5 WARRANTY OF WORK BONDS

11.5.1 ONE-YEAR WARRANTY OF WORK BONDS: One-Year Warranty of Work Bond: Contractor shall provide Bond on standard City One-Year Warranty of Work Bond form, providing for Contractor's correction, replacement, or restoration of any portion of the Work which is found to be not in compliance with requirements of the Contract during one-year correction period required in Paragraph 12.2. The One-Year Warranty of Work Bond must be for 100 percent of the Original Contract Price.

END OF DOCUMENT

Item 161
Compost

1. DESCRIPTION

Furnish and place compost as shown on the plans.

2. MATERIALS

Furnish compost that has been produced by aerobic (biological) decomposition of organic matter and meets the requirements of Table 1. Compost feedstock may include, but is not limited to, leaves and yard trimmings, biosolids, food scraps, food-processing residuals, manure or other agricultural residuals, forest residues, bark, and paper. Ensure compost and wood chips do not contain any visible refuse, other physical contaminants, or any substance considered harmful to plant growth. Do not use materials that have been treated with chemical preservatives as a compost feedstock or as wood chips. Do not use mixed municipal solid waste compost. Provide compost meeting all applicable 40 CFR 503 standards for Class A biosolids and TCEQ health and safety regulations as defined in the TAC, Chapter 332, including the time and temperature standards in Subchapter B, Part 23. Meet the requirements of the United States Composting Council (USCC) Seal of Testing Assurance (STA) program.

Before delivery of the compost, provide quality control (QC) documentation that includes the following:

- the feedstock by percentage in the final compost product,
- a statement that the compost meets federal and state health and safety regulations,
- a statement that the composting process has met time and temperature requirements,
- a copy of the producer's STA certification, and
- a copy of the lab analysis, performed by an STA-certified lab, verifying that the compost meets the requirements of Table 1.

Provide a copy of the current TCEQ compliance statement signed by the facility manager when furnishing biosolids compost.

Table 1
Physical Requirements for Compost

Property	Test Method	Requirement
Particle Size	TMECC[1] 02.02-B, "Sample Sieving for Aggregate Size Classification"	95% passing 5/8" 70% passing 3/8"
Heavy Metals Content	TMECC 04.06, "Heavy Metals and Hazardous Elements": 04.06-As, Arsenic 04.06-Cd, Cadmium 04.06-Cu, Copper 04.06-Pb, Lead 04.06-Hg, Mercury 04.06-Mo, Molybdenum 04.06-Ni, Nickel 04.06-Se, Selenium 04.06-Zn, Zinc	Pass
Salinity	TMECC 04.10-A, "1:5 Slurry Method, Mass Basis"	5.0 dS/m Max[2]
pH	TMECC 04.11-A, "1:5 Slurry pH"	5.5–8.5
Maturity	TMECC 05.05-A, "% Emergence and Relative Seedling Vigor"	> 80%
Organic Matter Content	TMECC 05.07-A, "Loss-On-Ignition Organic Matter Method"	25-65% (dry mass)
Stability	TMECC 05.08-B, "Carbon Dioxide Evolution Rate"	≤ 8
Fecal Coliform	TMECC 07.01-B, "Fecal Coliforms"	1,000 MPN/g Max

1. *Test Methods for the Examination of Composting and Compost,* published by the United States Department of Agriculture and the USCC.
2. A soluble salt content up to 10.0 dS/m for compost used in compost-manufactured topsoil will be acceptable.

Maintain compost in designated stockpiles at the producer's site. The Department reserves the right to sample compost at the jobsite. Material may be tested to verify compliance with this Specification by a STA-certified lab. Make payment to the STA-certified lab approved by the Department. Submit lab invoices for passing tests to the Department for reimbursement. Maintain a complete record of all test reports for the previous and current calendar year.

2.1. **Compost Manufactured Topsoil (CMT)**. Use CMT consisting of 75% topsoil blended with 25% compost measured by volume. Use topsoil conforming to Article 160.2., "Materials."

2.2. **Erosion Control Compost (ECC)**. Use ECC consisting of 50% untreated wood chips blended with 50% compost measured by volume. Use wood chips less than or equal to 5 in. in length with 95% passing a 2-in. screen and less than 30% passing a 1-in. screen.

2.3. **General Use Compost (GUC)**. Use GUC consisting of 100% compost.

3. CONSTRUCTION

Prepare the types of compost for use on the project and stockpile at the jobsite.

3.1. **Compost Manufactured Topsoil (CMT)**. After excavation and embankment work is complete, remove and dispose of objectionable material from the topsoil before blending. Use equipment capable of blending CMT uniformly to the full depth as specified. Roll the CMT with a light corrugated drum.

3.2. **Erosion Control Compost (ECC)**. Use only on slopes 3:1 or flatter. Apply a 2-in. uniform layer after excavation and embankment work is complete unless otherwise shown on the plans or directed. Use a light roller or other suitable equipment when rolling is specified.

3.3. **General Use Compost (GUC)**. Apply in a uniform layer as a top dressing on established vegetation to the depth shown on the plans. Do not bury existing vegetation. Apply GUC as a backfill ingredient, in a planting soil mixture, for planting bed preparation, or as mulch, when shown on the plans.

4. MEASUREMENT

This Item will be measured by the 100-ft. station along the baseline of each roadbed, by the square yard complete in place, or by the cubic yard in vehicles at the point of delivery.

For ECC cubic yard measurement, the quantity will be the composite material, compost and topsoil or wood chips.

5. PAYMENT

The work performed and materials furnished in accordance with this Item and measured as provided under "Measurement" will be paid for at the unit price bid for "Compost Manufactured Topsoil," "Erosion Control Compost," and "General Use Compost" as follows:

For measurement by the station and square yard, payment will be for the depth specified;

For measurement by the cubic yard, payment will be made for material measured in vehicles.

This price is full compensation for loading, hauling, stockpiling, blending, placing, rolling, sprinkling, equipment, labor, materials (including topsoil for CMT and wood chips for ECC), tools, and incidentals. Costs associated with passing quality assurance (QA) testing will be paid for in accordance with the requirements of Article 9.7., "Payment for Extra Work and Force Account Method," at invoice price with no add-ons.

Item 162
Sodding for Erosion Control

1. DESCRIPTION

Provide and install grass sod as shown on the plans or as directed.

2. MATERIALS

Use live, growing grass sod of the type specified on the plans. Use grass sod with a healthy root system and dense matted roots throughout the soil of the sod for a minimum thickness of 1 in. Do not use sod from areas where the grass is thinned out. Keep sod material moist from the time it is dug until it is planted. Grass sod with dried roots is unacceptable.

2.1. **Block Sod**. Use block, rolled, or solid sod free from noxious weeds, Johnson grass, other grasses, or any matter deleterious to the growth and subsistence of the sod.

2.2. **Mulch Sod**. Use mulch sod from an approved source, free from noxious weeds, Johnson grass, other grasses, or any matter deleterious to the growth and subsistence of the sod.

2.3. **Fertilizer**. Furnish fertilizer in accordance with Article 166.2., "Materials."

2.4. **Water**. Furnish water in accordance with Article 168.2., "Materials."

2.5. **Mulch**. Use straw mulch consisting of oat, wheat, or rice straw or hay mulch of either Bermudagrass or prairie grasses. Use straw or hay mulch free of Johnson grass and other noxious and foreign materials. Keep the mulch dry and do not use molded or rotted material.

2.6. **Tacking Methods**. Use a tacking agent applied in accordance with the manufacturer's recommendations or a crimping method on all straw or hay mulch operations. Use tacking agents as approved or as specified on the plans.

3. CONSTRUCTION

Cultivate the area to a depth of 4 in. before placing the sod. Plant the sod specified and mulch, if required, after the area has been completed to lines and grades as shown on the plans. Apply fertilizer uniformly over the entire area in accordance with Article 166.3., "Construction," and water in accordance with Article 168.3., "Construction." Plant between the average date of the last freeze in the Spring and 6 weeks before the average date for the first freeze in the Fall according to the Texas Almanac for the project area.

3.1. **Sodding Types**.

3.1.1. **Spot Sodding**. Use only Bermudagrass sod. Create furrows parallel to the roadway, approximately 5 in. deep and on 18-in. centers. Sod a continuous row not less than 3 in. wide in the 2 furrows adjacent to the roadway. Place 3-in. squares of sod on 15-in. centers in the remaining furrows. Place sod so that the root system will be completely covered by the soil. Firm all sides of the sod with the soil without covering the sod with soil.

3.1.2. **Block Sodding**. Place sod over the prepared area. Roll or tamp the sodded area to form a thoroughly compacted, solid mat filling all voids in the sodded area with additional sod. Trim and remove all visible netting and backing materials. Keep sod along edges of curbs, driveways, walkways, etc., trimmed until acceptance.

3.1.3. **Mulch Sodding**. Mow sod source to no shorter than 4 in., rake and remove cuttings. Disk the sod in 2 directions, cutting the sod to a minimum of 4 in. Excavate the sod material to a depth of no more than 6 in. Keep excavated material moist or it will be rejected. Distribute the mulch sod uniformly over the area to a depth of 6 in. loose, unless otherwise shown on the plans, and roll with a light roller or other suitable equipment.

Add or reshape the mulch sod to meet the requirements of Section 162.3.2., "Finishing."

3.2. **Finishing**. Smooth and shape the area after planting to conform to the desired cross-sections. Spread any excess soil uniformly over adjacent areas or dispose of the excess soil as directed.

3.3. **Straw or Hay Mulch**. Apply straw or hay mulch for "Spot Sodding" and "Mulch Sodding" uniformly over the area as shown on the plans. Apply straw mulch at 2 to 2-1/2 tons per acre. Apply hay mulch at 1-1/2 to 2 tons per acre. Use a tacking method over the mulched area.

4. MEASUREMENT

"Spot Sodding," "Block Sodding," and "Straw or Hay Mulch" will be measured by the square yard in its final position. "Mulch Sodding" will be measured by the square yard in its final position or by the cubic yard in vehicles as delivered to the planting site.

5. PAYMENT

The work performed and materials furnished in accordance with this Item and measured as provided under "Measurement" will be paid for at the unit price bid for "Spot Sodding," "Block Sodding," "Straw or Hay Mulch," or "Mulch Sodding." This price is full compensation for securing a source, excavation, loading, hauling, placing, rolling, finishing, furnishing materials, equipment, labor, tools, supplies, and incidentals. Fertilizer will not be paid for directly but will be subsidiary to this Item.

Unless otherwise specified on the plans, water, except for that used for maintaining and preparing the sod before planting, will be measured and paid for in accordance with Item 168, "Vegetative Watering."

Item 166
Fertilizer

1. DESCRIPTION

Provide and distribute fertilizer over areas specified on the plans.

2. MATERIALS

Use a complete fertilizer containing nitrogen (N), phosphoric acid (P), and potash (K) nutrients unless otherwise specified on the plans. Ensure at least 50% of the nitrogen component is a slow-release sulfur-coated urea. Ensure that fertilizer is in an acceptable condition for distribution in containers labeled with the analysis. Fertilizer is subject to testing by the Texas A&M Feed and Fertilizer Control Service in accordance with the Texas Fertilizer Law.

3. CONSTRUCTION

Deliver and apply the complete fertilizer uniformly at a rate equal to 60 lb. of nitrogen per acre or at the analysis and rate specified on the plans.

Apply fertilizer as a dry material and do not mix with water to form a slurry.

Incorporate fertilizer during seedbed preparation as specified on the plans.

4. MEASUREMENT

When fertilizer is specified on the plans to be a pay item, measurement will be by the acre of surface area covered or by the ton (2,000 lb.). Measurement by the ton will use guaranteed weight of bags or containers as shown by the manufacturer or certified scales meeting the requirements of Item 520, “Weighing and Measuring Equipment,” unless otherwise approved.

5. PAYMENT

Unless otherwise specified on the plans, the work performed, materials furnished, equipment, labor, tools, and incidentals will not be paid for directly but will be subsidiary to pertinent bid items.

When fertilizer is specified on the plans to be a pay item, the work performed and materials furnished in accordance with this Item and measured as provided under “Measurement” will be paid for at the unit price bid for “Fertilizer.” This price is full compensation for furnishing materials and performing operations.

Item 168
Vegetative Watering

1. DESCRIPTION

Provide and distribute water to promote growth of vegetation as directed.

2. MATERIALS

Use water that is clean and free of industrial wastes and other substances harmful to the growth of vegetation.

3. CONSTRUCTION

Apply water when directed. Furnish and operate equipment to distribute water at a uniform and controllable rate. Ensure that watering does not erode soil or plantings. Apply water in the required quantity where shown on the plans or as directed.

4. MEASUREMENT

This Item will be measured by the 1,000 gal. as applied.

5. PAYMENT

The work performed and materials furnished in accordance with this Item and measured as provided under "Measurement" will be paid for at the unit price bid for "Vegetative Watering." This price is full compensation for furnishing and operating watering equipment and measuring devices and for furnishing and applying water, including hauling, equipment, labor, and incidentals.

Item 404
Driving Piling

1. DESCRIPTION

Drive piling.

2. EQUIPMENT

2.1. **Driving Equipment**. Use power hammers for driving piling with specified bearing resistance. Use power hammers that comply with Table 1. Gravity hammers may be used for driving sheet piling and timber piling if no required design load is shown on the plans.

For initial rating of diesel hammers to determine compliance with the requirements of Table 1, the height of fall of the ram of the single-acting (open-end) hammer must be 7 ft. For a double-acting (enclosed ram) hammer, the energy rating must be 85% of the rated output by the manufacturer.

A hammer that produces less energy than required by Table 1 may be approved if a wave equation analysis indicates the hammer can drive the specified pile against a bearing resistance of 3 times the required design load before reaching 0.1 in. of penetration per blow. The bearing resistance of the piling driven with this particular equipment will be determined in accordance with the Wave Equation Method.

Use an air compressor that supplies the volume and pressure specified by the manufacturer of the hammer. Provide an accurate pressure gauge.

Maintain the valve mechanism and other parts of power hammers so the hammer will operate at the speed and stroke length specified by the manufacturer.

Equip enclosed ram diesel hammers with a gauge and provide charts to evaluate the equivalent energy being produced. Calibrate the gauge before work begins, whenever gauge accuracy is in question, and at least once each 6 months.

Table 1
Size of Driving Equipment

Piling Type	Hammer Type	Ram Weight (lb.)	Maximum Ram Stroke (ft.)	Minimum Hammer Energy (ft.-lb.)[1]
Timber	Air, Hydraulic	2,000 Min	5	330R
	Diesel	2,000 Min	10	330R
Steel	Air, Hydraulic	3,000 Min	5	Larger of 250R or 2-1/2 Wp
	Diesel	2,000 Min	10	Larger of 250R or 2-1/2 Wp
Concrete	Air, Hydraulic	3,000 Min, but not less than 1/4 Wp	5	250R, but not less than 1 ft.-lb. per pound of pile weight
	Diesel	2,700 Min, but not less than 1/4 Wp	8[2]	250R, but not less than 1 ft.-lb. per pound of pile weight

1. R = Design load in tons. Wp = Weight of pile in pounds based on plan length.
2. Diesel hammers with less ram weight or greater ram stroke are permitted if a wave equation analysis indicates the combination of ram weight, stroke, and cushioning will not overstress the piling.

Provide hammer cushion consisting of layers of micarta and aluminum or other material specifically produced and approved for this application. Use a wood, wire rope, or asbestos hammer cushion only if permitted.

Regulate the height of fall when using gravity hammers to avoid damage to the piling.

Drive all test piling in a structure or in any approved segment of it with the same hammer, and use the same type and size hammer to drive the remainder of the piling in the structure or segment.

Equip pile drivers with leads constructed to allow freedom of movement of the hammer and to provide adequate support to the pile during driving. The longitudinal axis of the leads, hammer, and pile should coincide.

Ensure leads are long enough, except where piling is driven through water, that a follower will not be necessary. Use 1 pile in each 10 that is long enough to permit driving without a follower when driving piling underwater and a follower is required. Drive it as a test pile for proper correlation of the follower-driven piling. Payment will be made as regular piling.

Hammers designed to operate underwater may be used for underwater driving without a follower and without the correlation required for other hammers.

2.2. **Protection of Pile Heads**. Use a steel driving head (helmet) suitable for the type and size of piling. Drive steel H-piling and sheet piling with a helmet compatible with the specific pile shape driven.

Provide a cushion block for concrete piling between the driving head and the top of the pile. Use a cushion block that is a minimum of 4 in. thick for short piling (50 ft. or less) and at least 6 in. thick for longer piling unless otherwise directed. Use multiple layers of one of the following:

- 3/4-in. or 1-in. structural grade southern pine or fir plywood;
- green oak or gum, with the grain of the wood horizontal; or
- other approved material specifically produced for this application.

Pay special attention to the condition of the cushioning material. Drive no more than 3 piles with one cushion block. Change cushioning more frequently if necessary to prevent damage. Immediately replace any cushion block that has ignited. Do not use a tight-fitting driving helmet for concrete piling. Allow room for slight movement, but ensure the driving helmet is not large enough for the pile head to rotate freely. Center concrete piling and cushion within the helmet throughout the driving operation.

3. CONSTRUCTION

This Item uses the following terms:

- **Foundation Piling**. Piling placed under interior bent footings or retaining wall abutment footings.
- **Trestle Piling**. Piling embedded directly into the abutment cap or interior bent cap.
- **Sheet Piling**. Retaining piling not considered either foundation or trestle piling.
- **Test Piling**. Specific piling driven to investigate site conditions and determine regular piling lengths.
- **Test-Loaded Piling**. Specific piling driven and test-loaded to investigate site conditions and determine regular piling lengths. Do not fabricate regular piling until test loading and analysis is completed.
- **Regular Piling**. All piling other than test piling and test-loaded piling.

Do not fabricate regular piling until test pile-driving and analysis or test loading and analysis is completed.

Complete the embankment at bridge ends before driving abutment piling. Refer to Item 423, “Retaining Walls,” for provisions on piling that passes through the structural volume of retaining walls.

Do not drive foundation piling until the footing excavation is complete. Drive concrete piling once the piling concrete, including build-ups, has aged at least 14 days. Do not drive piling in a saltwater environment until the piling concrete, including build-ups, has aged at least 21 days after concrete placement.

Re-drive any piling that is raised when driving adjacent piling. Withdraw and replace any broken, split, or displaced piling, or correct it as directed after a design analysis.

To control excessive stresses resulting in damage to the piling during driving, the following, alone or in combination, may be required:

- increase in cushion thickness,
- reduction of ram stroke,
- heavier ram with a shorter stroke,
- use of pilot holes or jetting when driving through hard or alternating hard and soft strata.

3.1. **Tolerance for Driving**. Drive piling to the required vertical or batter alignment, within the tolerances of this Section. Drive piling in pilot holes or with templates when necessary to comply with tolerances. Cut off piling reasonably square at the elevation shown on the plans, with a tolerance of no more than 2 in. above or below established cutoff grade. Submit for approval a structural analysis and proposed corrective action, signed and sealed by a licensed professional engineer when tolerances are exceeded and the Engineer requires corrective action.

3.1.1. **Trestle Piling**.

- Transverse to the centerline of the bent, the top of the piling may be no more than 2 in. from the position shown on the plans.
- Parallel to the centerline of the bent, the top of the piling may be no more than 4 in. from the position shown on the plans.

3.1.2. **Foundation Piling**.

- The top of each pile may be no more than 4 in. in any direction from the position shown on the plans.
- The center of gravity of the piling group may be no more than 3 in. from the center of gravity determined from plan location.
- The minimum edge distance for piling in a footing is 5 in. Additional concrete required to obtain this edge distance and specified reinforcing steel cover will be at the Contractor's expense.

3.2. **Penetration**. Piling lengths shown on the plans are the lengths estimated to give required bearing and for estimating purposes only. Drive piling to plan tip elevations or to greater depths as necessary to obtain the required bearing resistance shown on the plans.

The Engineer will establish regular pile lengths on the basis of the test data when test piling or test-loaded piling is used. Drive regular piling to this approximate elevation in these cases and to greater depths as required to obtain the plan bearing resistance.

Provide either pilot holes, jetting, or a combination of both for unusually hard driving conditions, typically less than 0.1 in. of penetration per blow if plan penetration is not obtained. Reduce penetration upon approval when the piling is advanced to within 5 ft. of plan length unless other penetration requirements or bearing evaluation methods govern.

3.3. **Pilot Holes**. Extend pilot holes no more than 5 ft. below the bottom of footings for foundation piling or 10 ft. below finished ground line for trestle piling, unless the specified penetration cannot be obtained by using the depth of holes indicated or specified. Determine the size and depth of pilot holes from the results of trial operations on the first piling driven or from available test pile data when deeper ones are required. Obtain approval for any excess depth or size of pilot holes. The maximum hole diameter permitted will be approximately 4 in. less than the diagonal of square piling or steel H-piling and 1 in. less than the diameter of round piling. The Engineer may vary hole size and depth to obtain penetration and bearing resistance.

Extend pilot holes through all embankments to natural ground when driving concrete piling.

Where a pilot hole is required in granular material that cannot be sealed off by ordinary drilling methods, a casing may be required around the boring device deep enough to prevent loose material from falling into the pilot hole.

Drive the piling below the depth of the pilot hole a minimum of 1 ft. or 100 blows, but not less than the required bearing resistance shown on the plans. Do not drive piling beyond the point where the penetration per blow is less than 0.1 in. as determined by an average of 10 blows unless directed otherwise. Stop driving if damage to the pile is apparent.

3.4. **Jetting**. Jetting is permitted when the specified penetration cannot be obtained by driving and pilot holes or other methods are not feasible. Submit details of the proposed methods for approval before jetting. The Engineer may authorize varying depths of jetting to achieve the desired results.

Jet as required in conjunction with driving but only to the approved depth. Use enough power for jetting operations to simultaneously operate at least two 2-1/2 in. diameter pipes equipped with 3/4-in. nozzles at a pressure of 150 psi. Perform the jetting with 1 or 2 jets as determined and approved from results of trial operations.

Drive the piling below the depth of the jetting a minimum of 1 ft. or 100 blows, but not less than the required bearing resistance shown on the plans. Do not drive piling beyond the point where the penetration per blow is less than 0.1 in. as determined by an average of 10 blows unless directed otherwise. Stop driving if damage to the pile is apparent.

3.5. **Hammer Formula Method of Bearing Evaluation**. Determine the allowable dynamic bearing resistance of piling by one of the hammer formulas in this Section unless otherwise shown on the plans. If the Engineer has determined a K factor based on test piling, test-loaded piling, or other methods, the computed allowable resistance will be the driving resistance determined based on the appropriate formula multiplied by the K factor. The computed allowable resistance should be greater than or equal to the foundation load shown on the plans.

3.5.1. **Single-Acting Power Hammers**. Use the following formula:

$$P_a = \frac{2WH}{S + 0.1}$$

where:
P_a = allowable dynamic resistance in pounds
W = weight of ram in pounds
H = height of fall of ram in feet (field measured)
S = average penetration in inches per blow for the last 20 blows

Determine H by an approved electronic stroke indicator and blow count logging device provided by the Contractor. Pending approval, H can be determined by visual observation of the ram against a calibrated rod mounted on the hammer or by the following formula:

$$H = 16.1 \times \left(\frac{30}{B}\right)^2 - 0.3$$

where B = blows per minute

3.5.2. **Double-Acting Power Hammers**. Use the following formula:

$$P_a = \frac{2E}{S + 0.1}$$

where:
P_a = allowable dynamic resistance in pounds
E = manufacturer's rated energy in foot-pounds (for double-acting power hammers), or the equivalent energy in foot-pounds determined by a calibrated gauge attached to the hammer and taken when the average

penetration in inches per blow is determined (for enclosed ram diesel hammer)
S = average penetration in inches per blow for the last 20 blows

3.5.3. **Other Hammer Types**. Provide a wave equation analysis for each pile, hammer, soil, and load combination for which the driving system is to be used. The analysis will determine the bearing capacity of the piling.

3.6. **Wave Equation Method of Bearing Evaluation**. Submit the following data when plans specify the bearing capacity of the piling be determined by the wave equation method:

- manufacturer's specification data for the hammer proposed for use, including all modifications and
- complete description and dimensions of all cushioning material used between the pile and helmet and in the cap block, including total thickness of each, and the direction of grain if wood is used.

These data are used by the Engineer to determine the required number of blows per unit of penetration the hammer must deliver to obtain the required bearing resistance.

After evaluation by the wave equation method, any change in the driving equipment may require re-evaluation. Such changes must be approved before further driving.

3.7. **Test Piling**. Drive test piling at locations shown on the plans or as directed. Make test piling part of the completed work, cut off or built up to grade as necessary. Use the required bearing evaluation method to determine bearing resistance.

Initially drive test piling to 3 ft. above plan tip elevation of the regular piling for the structure with the blow count recorded for each foot of driving (for example, drive test piling to 13 ft. above its plan tip elevation if the test piling is 10 ft. longer than regular piling). Retain the cushion if used.

Re-drive the test piling the additional length required by the plans at least 7 days after the original driving with the same hammer and cushion originally used. Record the blow count for each inch of driving for the first foot, for every 3 in. for the next 2 ft., and for each foot thereafter.

Provide the data to the Engineer for use in determining regular piling lengths and K factors. The K factor will be determined based on the following formula:

$$K = P_R / P$$

where:
K = a static correction factor applied to the evaluation method
P_R = re-drive bearing (tons) of the test pile determined by the evaluation method
P = original bearing (tons) of test pile determined by the evaluation method

3.8. **Test-Loaded Piling**. Conduct test load in accordance with Item 405, "Foundation Load Test."

Provide the data to the Engineer for use in determining regular piling lengths and K factors. The K factor will be determined based on the following formula:

$$K = L / P$$

where:
K = a static correction factor applied to the evaluation method
L = maximum safe static load proven by test load
P = bearing resistance of the test-loaded pile determined by the evaluation method

4. MEASUREMENT AND PAYMENT

The work performed, materials furnished, equipment, labor, tools, and incidentals will not be paid for directly but will be considered subsidiary to pertinent Items.

Item 407
Steel Piling

1. DESCRIPTION

Furnish and place steel H-piling, pipe piling, and sheet piling.

2. MATERIALS

Furnish steel H-piling, pipe piling, and steel sheet piling in accordance with Item 441, “Steel Structures,” and details shown on the plans.

Furnish steel that meets ASTM A690 or ASTM A572 Grade 50 for H-piling. Furnish steel that meets ASTM A572 Grade 50 for pipe piling. Furnish steel that meets ASTM A328, ASTM A690, or ASTM A572 Grade 50 for hot-rolled sheet piling. Furnish steel that meets ASTM A690 or ASTM A572 Grade 50 for cold-rolled sheet piling. Steel sheet piling may be substituted with a section modulus and minimum thickness of material equal to or greater than that of the section specified. If a hot-rolled section is specified, the substitute section must also be hot-rolled.

Furnish piling in the lengths indicated on the plans. The Engineer will approve lengths based on test driving data or test load data where test piling is required. Fabricate piling once the Engineer has determined the approved lengths.

At the Contractor’s expense, the H-piling or pipe piling may be fabricated by welding together up to 3 sections of piling with a minimum section length of 5 ft.

Shop-paint piling with 3.0 mils minimum Dry Film Thickness (DFT) inorganic zinc primer in accordance with the System III-B or IV paint protection system specified in Item 441, “Steel Structures,” unless otherwise shown on the plans. Apply appearance or intermediate coatings only if specified on the plans. Apply a marine-grade immersion coating system recommended by the manufacturer for marine, immersion service, and meeting the requirements of NORSOK Standard M-501, Coating System No. 7 for piling in marine environments. Submit a manufacturer’s certification that states the material meets the requirements of NORSOK Standard M-501, Coating System No. 7. Submit product data sheets and obtain approval of paint system before performing the work. Paint the portion of the pile to be above finished grade or dredge line, in water, and a minimum distance of 15 ft. below finished grade or dredge line, unless otherwise shown on the plans. Provide coatings for field painting in accordance with Item 446, “Field Cleaning and Painting Steel.”

Reinforce steel H-pile tips as directed when the piling is to be driven into rock, shale, or other material of similar hardness. Use the pile tip reinforcement detail shown on Common Foundation Details (FD) Standard or attach prefabricated pile points manufactured from ASTM A27 Grade 65-35 or ASTM A148 Grade 80-50 material. Furnish certification materials conforming to this requirement. Submit construction drawings for approval when alternate pile tip reinforcements are proposed.

Reinforce steel pipe piling and steel sheet piling tip as directed when piling is to be driven into rock, shale, or other material of similar hardness. Use prefabricated pipe piling or sheet piling tip reinforcements manufactured from ASTM A27 Grade 65-35 or ASTM A148 Grade 80-50 material. Submit construction drawings for approval when alternate pipe piling or sheet piling tip reinforcements are proposed.

Store piling above ground on adequate blocking. Keep piling clean and fully drained at all times during storage.

3. CONSTRUCTION

Drive piling in accordance with Item 404, "Driving Piling." Test load, when required, in accordance with Item 405, "Foundation Load Test."

3.1. **Splices and Cutoffs**. Make all splices for steel H-piling in accordance with detail on Common Foundation Details (FD) Standard. Submit pipe piling and sheet piling splicing locations and details of Record for approval. Drive spliced piling the additional depth required as soon as the splice is completed if the required penetration or bearing resistance has not been obtained.

Cut piling off square at plan grade or to the established grade after driving it to the approximate penetration and bearing resistance required. Cut off the damaged portion if the head of the pile is appreciably distorted or otherwise damaged below cutoff level, and splice an undamaged section in its place, at no additional expense to the Department.

Weld in accordance with Item 448, "Structural Field Welding."

3.2. **Painting**. Spot clean and paint in accordance with Item 446, "Field Cleaning and Painting Steel." Clean and paint damaged areas, field splices, or areas missing the shop coat, for IOZ primed piling, with enough epoxy zinc primer to bring the total zinc primer to the minimum 3.0 mils DFT after driving piling. Follow the repair procedures recommended by the manufacturer of the marine grade immersion coating system for piling with marine grade immersion coatings. Apply at least 2.0 mils DFT each of the System III epoxy intermediate coating and appearance coating when a polyurethane appearance coating is specified on the plans. Apply at least 2.0 mils DFT of the System IV appearance coating when an acrylic latex appearance coating is specified on the plans. Use a concrete gray appearance coating unless shown otherwise on the plans. Extend the appearance coat 1 ft. below finished ground line unless the piling is standing in water, in which case extend the appearance coat to the low water line. Replace any earth removed for this painting after the paint has dried.

3.3. **Test Piling**. Test piling must meet requirements for steel piling. The Engineer may adjust the number of test piling to secure desired information.

4. MEASUREMENT

4.1. **Steel H-Piling and Pipe Piling**.

4.1.1. **Steel Piling**. Steel H-piling, Steel H-test piling, Steel Pipe piling, and Steel Pipe-test piling will be measured by the foot of acceptable piling in place after all cutoffs and splices have been made. When the Contractor elects to drive piling deeper than required to meet the specified length and bearing requirements, no measurement will be made on that portion below the elevation at which length and bearing requirements were first obtained.

4.1.2. **Splices**. Splices will be measured by each authorized splice made necessary by driving beyond the plan pile length to obtain the required bearing resistance.

4.1.3. **Reinforced Tips**. Reinforced tips will be measured by each pile tip when required.

4.2. **Steel Sheet Piling**.

4.2.1. **Steel Piling**. Steel sheet piling will be measured by the square foot of acceptable piling in place. Sheet piling driven below the elevation required by the plans or the elevation authorized by the Engineer will not be measured for payment.

4.2.2. **Reinforced Tips**. Reinforced tips will be measured by each pile tip when required.

5. PAYMENT

No direct payment will be made for painting or excavation and backfill required for the painting of portions of piling below ground line. Payment for all work and materials required by these items will be included in the unit price bid for “Steel H-Piling,” “Steel H-Test Piling,” “Sheet Piling,” “Steel Pipe Piling,” or “Steel Pipe Test Pile.”

The price bid is full compensation for jetting, pilot holes, alignment holes, driving piling, painting, materials, tools, equipment, labor, and incidentals. Any test load ordered by the Engineer that is not provided for in the Contract will be paid for in accordance with Article 9.7., “Payment for Extra Work and Force Account Method.”

5.1. **Steel H-Piling and Pipe Piling**.

5.1.1. **Steel Piling**. The work performed and materials furnished in accordance with this Item and measured as provided under “Measurement” will be paid for at the unit price bid for the specified size and weight of “Steel H-Piling,” “Steel H-Test Piling,” “Steel Pipe Piling,” or “Steel Pipe Test Piling.”

5.1.2. **Splices**. Payment for each completed authorized splice for both regular and test piling, regardless of buildup length, will be made at a price equal to 4 times the unit price bid for “Steel H-Piling” or “Steel Pipe Piling.”

5.1.3. **Cutoffs**. Cutoffs will not be paid for directly but will be subsidiary to this Item.

5.1.4. **Reinforced Tips**. Payment for each completed authorized pile tip for both regular and test piling will be made at a price equal to 2 times the unit price bid for “Steel H-Piling” or “Steel Pipe Piling.”

5.2. **Steel Sheet Piling**.

5.2.1. **Steel Piling**. Steel sheet piling will be paid for at the unit price bid per square foot for “Sheet Piling” of the type shown on the plans. No payment will be made for cutoffs or splices of sheet piling.

5.2.2. **Reinforced Tips**. Payment for each completed authorized pile tip will be made at a price equal to 2 times the unit price bid for “Steel Sheet Piling.”

Item 421
Hydraulic Cement Concrete

1. DESCRIPTION

Furnish hydraulic cement concrete for concrete pavements, concrete structures, and other concrete construction.

2. MATERIALS

Use materials from prequalified sources listed on the Department website. Provide coarse and fine aggregates from sources listed in the Department's *Concrete Rated Source Quality Catalog* (CRSQC). Use materials from non-listed sources only when tested and approved by the Engineer before use. Allow 30 calendar days for the Engineer to sample, test, and report results for non-listed sources. Do not combine approved material with unapproved material.

2.1. **Cement**. Furnish cement conforming to DMS-4600, "Hydraulic Cement."

2.2. **Supplementary Cementing Materials (SCM)**.

- **Fly Ash**. Furnish fly ash, ultra-fine fly ash (UFFA), and modified Class F fly ash (MFFA) conforming to DMS-4610, "Fly Ash."
- **Slag Cement**. Furnish Slag Cement conforming to DMS-4620, "Slag Cement."
- **Silica Fume**. Furnish silica fume conforming to DMS-4630, "Silica Fume."
- **Metakaolin**. Furnish metakaolin conforming to DMS-4635, "Metakaolin."

2.3. **Cementitious Material**. Cementitious materials are the cement and supplementary cementing materials used in concrete.

2.4. **Chemical Admixtures**. Furnish admixtures conforming to DMS-4640, "Chemical Admixtures for Concrete."

2.5. **Water**. Furnish mixing and curing water that is free from oils, acids, organic matter, or other deleterious substances. Water from municipal supplies approved by the Texas Department of Health will not require testing. Provide test reports showing compliance with Table 1 before use when using water from other sources.

Water that is a blend of concrete wash water and other acceptable water sources, certified by the concrete producer as complying with the requirements of both Table 1 and Table 2, may be used as mix water. Test the blended water weekly for 4 weeks for compliance with Table 1 and Table 2 or provide previous test results. Then test every month for compliance. Provide water test results upon request.

Table 1
Chemical Limits for Mix Water

Contaminant	Test Method	Maximum Concentration (ppm or mg\L)
Chloride (Cl)	ASTM C114	
Prestressed concrete		500
Bridge decks & superstructure		500
All other concrete		1,000
Sulfate (SO4)	ASTM C114	2,000
Alkalies (Na2O + 0.658K2O)	ASTM C114	600
Total solids	ASTM C1603	50,000

Table 2
Acceptance Criteria for Questionable Water Supplies

Property	Test Method	Limits
Compressive strength, min % control at 7 days	ASTM C31, ASTM C39[1,2]	90
Time of set, deviation from control, h:min.	ASTM C403	From 1:00 early to 1:30 later

1. Base comparisons on fixed proportions and the same volume of test water compared to the control mix using 100% potable water or distilled water.
2. Base comparisons on sets consisting of at least 2 standard specimens made from a composite sample.

Do not use mix water that has an adverse effect on the air-entraining agent, on any other chemical admixture, or on strength or time of set of the concrete. Use mixing and curing water free of iron and other impurities that may cause staining or discoloration when using white hydraulic cement.

2.6. **Aggregate**.

2.6.1. **Coarse Aggregate**. Provide coarse aggregate consisting of durable particles of gravel, crushed blast furnace slag, recycled crushed hydraulic cement concrete, crushed stone, or combinations which are free from frozen material and from injurious amounts of salt, alkali, vegetable matter, or other objectionable material, either free or as an adherent coating. Provide coarse aggregate of uniform quality throughout.

Provide coarse aggregate with the requirements listed in Table 3 unless otherwise shown on the plans.

Table 3
Coarse Aggregate Requirements

Description	Test Method	Limit
Weight of Clay Lumps, % Max	Tex-413-A	0.25
Weight of Shale, % Max		1.0
Weight of Laminate and Friable Particle, % Max		5.0
L.A. Abrasion Wear, % Max	Tex-410-A	40
5-Cycle Magnesium Sulfate Soundness,[1,2] non-air-entrained concrete, % Max	Tex-411-A	25
5-Cycle Magnesium Sulfate Soundness,[1,3] air-entrained concrete, % Max		18
Loss by Decantation, % Max	Tex-406-A	1.5

1. Recycled crushed hydraulic cement concrete is not subject to 5-cycle magnesium sulfate soundness requirements.
2. Allowed when air-entrained concrete is used at the Contractor's option.
3. Only when air-entrained concrete is required by the plans.

Increase the loss by decantation limit to 3.0% for all classes of concrete and 5.0% for Class A, B, and P if the material finer than the No. 200 sieve is determined to be at least 85% calcium carbonate in accordance with Tex-406-A, Part III, in the case of coarse aggregates made primarily from crushing stone unless otherwise shown on the plans. Provide test results upon request.

Provide coarse aggregate or combination of aggregates conforming to the gradation requirements shown in Table 4 when tested in accordance with Tex-401-A unless otherwise specified.

Table 4
Coarse Aggregate Gradation Chart

Aggregate Grade No.[1]	Maximum Nominal Size	Percent Passing on Each Sieve								
		2-1/2"	2"	1-1/2"	1"	3/4"	1/2"	3/8"	#4	#8
1	2"	100	80–100	50–85		20–40			0–10	
2	1-1/2"		100	95–100		35–70		10–30	0–10	
3	1-1/2"		100	95–100		60–90	25–60		0–10	
4 (57)	1"			100	95–100		25–60		0–10	0–5
5 (67)	3/4"				100	90–100		20–55	0–10	0–5
6 (7)	1/2"					100	90–100	40–70	0–15	0–5
7	3/8"						100	70–95	0–25	
8	3/8"						100	95–100	20–65	0–10

1. Corresponding ASTM C33 gradation shown in parentheses.

2.6.2. **Fine Aggregate**. Provide fine aggregate consisting of clean, hard, durable particles of natural, manufactured sand, recycled crushed hydraulic cement concrete, slag, lightweight aggregate, or a combination thereof. Provide fine aggregate free from frozen material and from injurious amounts of salt, alkali, vegetable matter, or other objectionable material.

Provide fine aggregates with the requirements in Table 5 unless otherwise shown on the plans.

Table 5
Fine Aggregate Requirements

Description	Test Method	Limit
Weight of Clay Lumps, % Max	Tex-413-A	0.50
Organic Impurities[1]	Tex-408-A	Color not darker than standard
Sand Equivalent	Tex-203-F	80
Fineness Modulus	Tex-402-A	2.3 to 3.1

1. Only when air-entrained concrete is specified.

Provide fine aggregate or combinations of aggregates conforming to the gradation requirements shown in Table 6 when tested in accordance with Tex-401-A unless otherwise specified.

Table 6
Fine Aggregate Gradation Chart (Grade 1)

Sieve Size	Percent Passing
3/8"	100
#4	95–100
#8	80–100
#16	50–85
#30	25–65
#50	10–35[1]
#100	0–10
#200	0–3[2]

1. 6–35 when sand equivalent value is greater than 85.
2. 0–6 for manufactured sand.

2.6.3. **Intermediate Aggregate**. Provide intermediate aggregate consisting of clean, hard, durable particles of natural, manufactured sand, slag, recycled crushed hydraulic cement concrete, lightweight aggregate, or a combination thereof when optimized aggregate gradation (OAG) concrete is specified or when used at the Contractor's option. Provide intermediate aggregate free from frozen material and injurious amounts of salt, alkali, vegetable matter, or other objectionable material.

Provide intermediate aggregate with the requirements in Table 7.

Table 7
Intermediate Aggregate Requirements

Description	Test Method	Limit
Weight of Clay Lumps, % Max	Tex-413-A	0.50
L.A. Abrasion Wear,[1] % Max	Tex-410-A	40
5-Cycle Magnesium Sulfate Soundness,[1,2,3] non-air-entrained concrete, % Max	Tex-411-A	25
5-Cycle Magnesium Sulfate Soundness,[1,2,4] air-entrained concrete, % Max		18
Organic Impurities[5]	Tex-408-A	Color not darker than standard
Loss by Decantation,[1] % Max	Tex-406-A	1.5

1. Only applies to the portion retained on the No. 4 sieve, if more than 30% of the intermediate aggregate is retained on the No. 4 sieve.
2. Recycled crushed hydraulic cement concrete is not subject to 5-cycle magnesium sulfate soundness requirements.
3. Allowed when air-entrained concrete is used at the Contractor's option.
4. Only when air-entrained concrete is required by the plans.
5. Only applies to the portion passing the 3/8 in. sieve, if more than 30% of the intermediate aggregate is passing the 3/8 in. sieve.

For the portion retained on the No. 4 sieve, if more than 30% of the intermediate aggregate is retained on the No. 4 sieve, and in the case of aggregates made primarily from crushing stone, unless otherwise shown on the plans, the loss by decantation may be increased to 3.0% for all classes of concrete and 5.0% for Class A, B, and P if the material finer than the No. 200 sieve is determined to be at least 85% calcium carbonate in accordance with Tex-406-A, Part III. Provide test results upon request.

2.7. **Mortar and Grout**. Furnish pre-packaged grouts conforming to DMS-4675, "Cementitious Grouts and Mortars for Miscellaneous Applications," when specified for applications other than post-tension grouting.

Section 421.4.2.6., "Mix Design Options," does not apply for mortar and grout.

2.8. **Storage of Materials**.

2.8.1. **Cement and Supplementary Cementing Materials**. Store all cement and supplementary cementing materials in weatherproof enclosures that will protect them from dampness or absorption of moisture.

When permitted, small quantities of packaged cementitious material may be stored in the open, on a raised platform, and under waterproof covering for up to 48 hr.

2.8.2. **Aggregates**. Handle and store concrete aggregates in a manner that prevents contamination with foreign materials. Clear and level the sites for the stockpiles of all vegetation if the aggregates are stored on the ground and do not use the bottom 6-in. layer of aggregate without cleaning the aggregate before use.

Maintain separate stockpiles and prevent intermixing when conditions require the use of 2 or more grades of coarse aggregates. Separate the stockpiles using physical barriers where space is limited. Store aggregates from different sources in different stockpiles unless the Engineer authorizes pre-blending of the aggregates. Minimize segregation in stockpiles. Remix and test stockpiles when segregation is apparent.

Sprinkle stockpiles to control moisture and temperature as necessary. Maintain reasonably uniform moisture content in aggregate stockpiles.

2.8.3. **Chemical Admixtures**. Store admixtures in accordance with manufacturer's recommendations and prevent admixtures from freezing.

3. EQUIPMENT

3.1. **Concrete Plants and Mixing Equipment**. Except for volumetric stationary plant or truck (auger) mixers, each plant and truck mixer must be currently certified by the National Ready Mixed Concrete Association (NRMCA) or have an inspection report signed and sealed by a licensed professional engineer showing concrete measuring, mixing, and delivery equipment meets all requirements of ASTM C94. A new

certification or signed and sealed report is required every time a plant is moved. Plants with a licensed professional engineer's inspection require re-inspection every 2 yr. Provide a copy of the certification or the signed and sealed inspection report to the Engineer. Remove equipment or facilities from service until corrected when they fail to meet specification requirements.

When allowed on the plans or by the Engineer, for concrete classes not identified as structural concrete in Table 8 or for Class C concrete not used for bridge-class structures, the Engineer may inspect and approve all plants and trucks instead of the NRMCA or non-Department engineer-sealed certifications. The criteria and frequency of Engineer approval of plants and trucks is the same used for NRMCA certification.

Inspect and furnish inspection reports on the condition of blades and fins and their percent wear from the original manufacturer's design for truck mixers and agitators annually. Repair mixing equipment exhibiting 10% or more wear before use. If an inspection within 12 mo. is not practical, a 2-mo. grace period (for a maximum of 14 mo. between inspections) is permitted.

3.1.1. **Scales**. Check all scales before beginning of operations, after each move, or whenever their accuracy or adequacy is questioned, and at least once every 6 mo. Immediately correct deficiencies, and recalibrate. Provide a record of calibration showing scales in compliance with ASTM C94 requirements. Check batching accuracy of volumetric water batching devices at least every 90 days. Check batching accuracy of chemical admixture dispensing devices at least every 6 mo. Perform daily checks as necessary to ensure measuring accuracy.

3.1.2. **Volumetric Mixers**. Provide volumetric mixers with rating plates defining the capacity and the performance of the mixer in accordance with the Volumetric Mixer Manufacturers Bureau or equivalent. Provide volumetric mixers that comply with ASTM C685. Provide test data showing mixers meet the uniformity test requirements of Tex-472-A.

Unless allowed on the plans or by the Engineer, volumetric truck (auger) mixers may not supply classes of concrete identified as structural concrete in Table 8.

3.1.3. **Agitators and Truck and Stationary Mixers**. Provide stationary and truck mixers capable of combining the ingredients of the concrete into a thoroughly mixed and uniform mass and capable of discharging the concrete so at least 5 of the 6 requirements of Tex-472-A are met.

Perform concrete uniformity tests on mixers or agitators in accordance with Tex-472-A as directed, to resolve issues of mix uniformity and mixer performance.

Perform the mixer or agitator uniformity test at the full rated capacity of the equipment. Remove all equipment that fails the uniformity test from service.

Inspect and maintain mixers and agitators. Keep them free of concrete buildup, and repair or replace worn or damaged blades or fins.

Ensure all mixers have a plate affixed showing manufacturer's recommended operating speed and rated capacity for mixing and agitating.

3.2. **Hauling Equipment**. Provide hauling equipment capable of maintaining the mixed concrete in a thoroughly mixed and uniform mass, and discharging the concrete with a satisfactory degree of uniformity.

Provide equipment with smooth, mortar-tight metal containers equipped with gates that prevent accidental discharge of the concrete when using non-agitating equipment for transporting concrete.

Maintain hauling equipment clean and free of built-up concrete.

3.3. **Testing Equipment**. Furnish and maintain the following in accordance with the pertinent test procedure unless otherwise shown on the plans or specified:

- sieves necessary to perform aggregate gradation analysis when optimized aggregate gradation is specified,
- equipment necessary to perform Tex-415-A and Tex-422-A,
- equipment necessary to perform Tex-409-A or Tex-425-A,
- test molds,
- curing facilities,
- maturity meters if used, and
- wheelbarrow or other container acceptable for the sampling of the concrete.

Provide strength-testing equipment when required in accordance with the Contract-controlling test unless shown otherwise.

4. CONSTRUCTION

4.1. **Classification of Concrete Mix Designs**. Provide classes of concrete meeting the requirements shown in Table 8.

A higher-strength class of concrete with equal or lower water-to-cementitious material (w/cm) ratio may be substituted for the specified class of concrete when approved.

4.2. **Mix Design Proportioning**. Furnish mix designs using ACI 211, Tex-470-A, or other approved procedures for the classes of concrete listed in Table 8 unless a design method is indicated on the plans. Perform mix design proportioning by absolute volume method unless otherwise approved. Perform cement replacement using equivalent weight method unless otherwise approved.

Do not exceed the maximum w/cm ratio listed in Table 8 when designing the mixture.

4.2.1. **Cementitious Materials**. Do not exceed 700 lb. of cementitious material per cubic yard of concrete unless otherwise specified or approved.

- Use cement of the same type and from the same source for monolithic placements.
- Do not use supplementary cementing materials when white hydraulic cement is specified.

Table 8
Concrete Classes

Class of Concrete	Design Strength,[1] Min f'_c (psi)	Max w/cm Ratio	Coarse Aggregate Grades[2,3,4]	Cement Types	Mix Design Options	Exceptions to Mix Design Options	General Usage[5]
A	3,000	0.60	1–4, 8	I, II, I/II, IL, IP, IS, IT, V	1, 2, 4, & 7	When the cementitious material content does not exceed 520 lb./cu. yd., Class C fly ash may be used instead of Class F fly ash.	Curb, gutter, curb & gutter, conc. retards, sidewalks, driveways, back-up walls, anchors, non-reinforced drilled shafts
B	2,000	0.60	2–7				Riprap, traffic signal controller foundations, small roadside signs, and anchors
C[6]	3,600	0.45	1–6	I, II, I/II, IP, IS, IT,[7] V	1–8		Drilled shafts, bridge substructure, bridge railing, culverts except top slab of direct traffic culverts, headwalls, wing walls, inlets, manholes, concrete traffic barrier (cast-in-place)
E	3,000	0.50	2–5	I, II, I/II, IL, IP, IS, IT,[7] V	1–8	When the cementitious material content does not exceed 520 lb./cu. yd., Class C fly ash may be used instead of Class F fly ash.	Seal concrete

Table 8 (continued)
Concrete Classes

Class of Concrete	Design Strength,[1] Min f'c (psi)	Max w/cm Ratio	Coarse Aggregate Grades[2,3,4]	Cement Types	Mix Design Options	Exceptions to Mix Design Options	General Usage[5]
F[6]	Note[8]	0.45	2–5	I, II, I/II, IP, IS, IT,[7]V			Railroad structures; occasionally for bridge piers, columns, or bents
H[6]	Note[8]	0.45	3–6	I, II, I/II, III, IP, IS, IT,[7] V	1–5	Do not use Type III cement in mass placement concrete. Up to 20% of blended cement may be replaced with listed SCMs when Option 4 is used for precast concrete.	Precast concrete, post-tension members
S[6]	4,000	0.45	2–5	I, II, I/II, IP, IS, IT,[7]V	1–8		Bridge slabs, top slabs of direct traffic culverts, approach slabs
P	See Item 360, "Concrete Pavement."	0.50	2–3	I, II, I/II, IL, IP, IS, IT, V	1–8	When the cementitious material content does not exceed 520 lb./cu. yd., Class C fly ash may be used instead of Class F fly ash.	Concrete pavement
CO[6]	4,600	0.40	6	I, II, I/II, IP, IS, IT,[7] V	1–8		Bridge deck concrete overlay
LMC[6]	4,000	0.40	6–8				Latex-modified concrete overlay
SS[6]	3,600	0.45	4–6			Use a minimum cementitious material content of 658 lb./cu. yd. of concrete.	Slurry displacement shafts, underwater drilled shafts
K[6]	Note[8]	0.40	Note[8]	I, II, I/II, III IP, IS, IT,[7] V			Note[8]
HES	Note[8]	0.45	Note[8]	I, IL, II, I/II, III		Mix design options do not apply. 700 lb. of cementitious material per cubic yard limit does not apply.	Concrete pavement, concrete pavement repair
"X" (HPC) [6,9,10]	Note[11]	0.45	Note[11]	I, II, I/II, III IP, IS, IT,[7] V	1–5, & 8	Maximum fly ash replacement for Options 1 and 3 may be increased to 45%. Up to 20% of a blended cement may be replaced with listed SCMs for Option 4. Do not use Option 8 for precast concrete.	
"X" (SRC) [6,9,10]	Note[11]	0.45	Note[11]	I/II, II, IP, IS, IT,[7] V	1–4 , & 7	Do not use Class C Fly Ash Type III-MS may be used where allowed. Type I and Type III cements may be used with Options 1–3, with a maximum w/cm of 0.40. Up to 20% of blended cement may be replaced with listed SCMs when Option 4 is used for precast concrete. Do not use Option 7 for precast concrete.	

1. Design strength must be attained within 56 days.
2. Do not use Grade 1 coarse aggregate except in massive foundations with 4 in. minimum clear spacing between reinforcing steel bars, unless otherwise permitted. Do not use Grade 1 aggregate in drilled shafts.
3. Use Grade 8 aggregate in extruded curbs unless otherwise approved.
4. Other grades of coarse aggregate maybe used in non-structural concrete classes when allowed by the Engineer.
5. For information only.
6. Structural concrete classes.
7. Do not use Type IT cements containing > 5% limestone.
8. As shown on the plans or specified.
9. "X" denotes class of concrete shown on the plans or specified.
10. (HPC): High Performance Concrete, (SRC): Sulfate Resistant Concrete.
11. Same as class of concrete shown on the plans.

4.2.2. **Aggregates**. Recycled crushed hydraulic cement concrete may be used as a coarse or fine aggregate in Class A, B, E, and P concrete. Limit recycled crushed concrete fine aggregate to a maximum of 20% of the fine aggregate.

Use light-colored aggregates when white hydraulic cement is specified.

Use fine aggregate with an acid insoluble residue of at least 60% by weight when tested in accordance with Tex-612-J in all concrete subject to direct traffic.

Use the following equation to determine if the aggregate combination meets the acid insoluble residue requirement when blending fine aggregate or using an intermediate aggregate:

$$\frac{(A_1 \times P_1) + (A_2 \times P_2) + (A_{ia} \times P_{ia})}{100} \geq 60\%$$

where:
A_1 = acid insoluble (%) of fine aggregate 1
A_2 = acid insoluble (%) of fine aggregate 2
A_{ia} = acid insoluble (%) of intermediate aggregate passing the 3/8 in. sieve
P_1 = percent by weight of fine aggregate 1 of the fine aggregate blend
P_2 = percent by weight of fine aggregate 2 of the fine aggregate blend
P_{ia} = percent by weight of intermediate aggregate passing the 3/8 in. sieve

Alternatively to the above equation, blend fine aggregate with a micro-deval loss of less than 12%, when tested in accordance with Tex-461-A, with at least 40% of a fine aggregate with an acid insoluble residue of at least 60%.

4.2.3. **Chemical Admixtures**. Do not use Type C, Type E, Type F, or Type G admixtures in Class S bridge deck concrete. Do not use chemical admixtures containing calcium chloride in any concrete.

Use a 30% calcium nitrite solution when a corrosion-inhibiting admixture is required. The corrosion-inhibiting admixture must be set neutral unless otherwise approved. Dose the admixture at the rate of gallons of admixture per cubic yard of concrete shown on the plans.

4.2.4. **Air Entrainment**. Use an approved air-entraining admixture when air-entrained concrete is specified, or when an air-entraining admixture is used at the Contractor's option, and do not exceed the manufacturer's recommended dosage. Ensure the minimum entrained air content is at least 3.0% for all classes of concrete except Class P when air-entrained concrete is specified, during trial batch, or when providing previous field data.

4.2.5. **Slump**. Provide concrete with a slump in accordance with Table 9 unless otherwise specified. When approved, the slump of a given concrete mix may be increased above the values shown in Table 9 using chemical admixtures, provided the admixture-treated concrete has the same or lower water-to-cementitious material ratio and does not exhibit segregation or excessive bleeding. Request approval to exceed the slump limits in Table 9 sufficiently in advance for proper evaluation by the Engineer.

Perform job-control testing of slump in accordance with Section 421.4.8.3.1., "Job-Control Testing."

Table 9
Placement Slump Requirements

General Usage[1]	Placement Slump Range,[2] in.
Walls (over 9 in. thick), caps, columns, piers, approach slabs, concrete overlays	3 to 5
Bridge slabs, top slabs of direct traffic culverts, latex-modified concrete for bridge deck overlays	3 to 5-1/2
Inlets, manholes, walls (less than 9 in. thick), bridge railing, culverts, concrete traffic barrier, concrete pavement (formed), seal concrete	4 to 5-1/2
Precast concrete	4 to 9
Underwater concrete placements	6 to 8-1/2
Drilled shafts, slurry displaced and underwater drilled shafts	See Item 416, "Drilled Shaft Foundations."
Curb, gutter, curb and gutter, concrete retards, sidewalk, driveways, anchors, riprap, small roadside sign foundations, concrete pavement repair, concrete repair	As approved

1. For information only.
2. For fiber reinforced concrete, perform slump before addition of fibers.

4.2.6. **Mix Design Options**.

4.2.6.1. **Option 1**. Replace 20% to 35% of the cement with Class F fly ash.

4.2.6.2. **Option 2**. Replace 35% to 50% of the cement with slag cement or MFFA.

4.2.6.3. **Option 3**. Replace 35% to 50% of the cement with a combination of Class F fly ash, slag cement, MFFA, UFFA, metakaolin, or silica fume; however, no more than 35% may be fly ash, and no more than 10% may be silica fume.

4.2.6.4. **Option 4**. Use Type IP, Type IS, or Type IT cement as allowed in Table 5 for each class of concrete. Up to 10% of a Type IP, Type IS, or Type IT cement may be replaced with Class F fly ash, slag cement, or silica fume. Use no more than 10% silica fume in the final cementitious material mixture if the Type IT cement contains silica fume, and silica fume is used to replace the cement.

4.2.6.5. **Option 5**. Replace 35% to 50% of the cement with a combination of Class C fly ash and at least 6% of silica fume, UFFA, or metakaolin. However, no more than 35% may be Class C fly ash, and no more than 10% may be silica fume.

4.2.6.6. **Option 6**. Use a lithium nitrate admixture at a minimum dosage determined by testing conducted in accordance with Tex-471-A, "Lithium Dosage Determination Using Accelerated Mortar Bar Testing." Before use of the mix, provide an annual certified test report signed and sealed by a licensed professional engineer, from a laboratory on the Department's MPL, certified by the Construction Division as being capable of testing according to Tex-471-A, "Lithium Dosage Determination Using Accelerated Mortar Bar Testing."

4.2.6.7. **Option 7**. Ensure the total alkali contribution from the cement in the concrete does not exceed 3.5 lb. per cubic yard of concrete when using hydraulic cement not containing SCMs calculated as follows:

$$\text{lb. alkali per cu. yd.} = \frac{(\text{lb. cement per cu. yd.}) \times (\%\ \text{Na}_2\text{O equivalent in cement})}{100}$$

In the above calculation, use the maximum cement alkali content reported on the cement mill certificate.

4.2.6.8. **Option 8**. Perform annual testing as required for any deviations from Options 1–5 or use mix design options listed in Table 10. Laboratories performing ASTM C1260, ASTM C1567, and ASTM C1293 testing must be listed on the Department's MPL. Before use of the mix, provide a certified test report signed and sealed by a licensed professional engineer demonstrating the proposed mixture conforms to the requirements of Table 10.

Provide a certified test report signed and sealed by a licensed professional engineer, when HPC is required, and less than 20% of the cement is replaced with SCMs, demonstrating ASTM C1202 test results indicate the permeability of the concrete is less than 1,500 coulombs tested immediately after either of the following curing schedules:

- Moisture cure specimens 56 days at 73°F.
- Moisture cure specimens 7 days at 73°F followed by 21 days at 100°F.

Table 10
Option 8 Testing and Mix Design Requirements

Scenario	ASTM C1260 Result		Testing Requirements for Mix Design Materials or Prescriptive Mix Design Options[1]
	Mix Design Fine Aggregate	Mix Design Coarse Aggregate	
A	> 0.10%	> 0.10%	Determine the dosage of SCMs needed to limit the 14-day expansion of each aggregate[2] to 0.08% when tested individually in accordance with ASTM C1567; or Use a minimum of 40% Class C fly ash with a maximum CaO[3] content of 25%.
B	≤ 0.10%	≤ 0.10%	Use a minimum of 40% Class C fly ash with a maximum CaO[3] content of 25%; or Use any ternary combination which replaces 35% to 50% of cement.
	≤ 0.10%	ASTM C1293 1 yr. Expansion ≤ 0.04%	Use a minimum of 20% of any Class C fly ash; or Use any ternary combination which replaces 35% to 50% of cement.
C	≤ 0.10%	> 0.10%	Determine the dosage of SCMs needed to limit the 14-day expansion of coarse and intermediate[2] aggregate to 0.08% when tested individually in accordance with ASTM C1567; or Use a minimum of 40% Class C fly ash with a maximum CaO[3] content of 25%.
D	> 0.10%	≤ 0.10%	Use a minimum of 40% Class C fly ash with a maximum CaO[3] content of 25%; or Use any ternary combination which replaces 35% to 50% of cement.
	> 0.10%	ASTM C1293 1 yr. Expansion ≤ 0.04%	Determine the dosage of SCMs needed to limit the 14-day expansion of fine aggregate to 0.08% when tested in accordance with ASTM C1567.

1. Do not use Class C fly ash if the ASTM C1260 value of the fine, intermediate, or coarse aggregate is 0.30% or greater, unless the fly ash is used as part of a ternary system.
2. Intermediate size aggregates will fall under the requirements of mix design coarse aggregate.
3. Average the CaO content from the previous ten values as listed on the mill certificate.

4.2.7. **Optimized Aggregate Gradation (OAG) Concrete**. The gradation requirements in Table 3 and Table 4 do not apply when OAG concrete is specified or used by the Contractor unless otherwise shown on the plans. Use Tex-470-A to establish the optimized aggregate gradation. Use at least 420 lb. per cubic yard of cementitious material when OAG concrete is used unless otherwise approved. Use a coarse aggregate with a maximum nominal size of 1-1/2 in. for Class P concrete. Use a coarse aggregate for all other classes of concrete with a maximum nominal size not larger than:

- 1/5 the narrowest dimension between sides of forms, or
- 1/3 the depth of slabs, or
- 3/4 the minimum clear spacing between individual reinforcing bars or wires, bundles of bars, individual tendons, bundled tendons, or ducts.

Make necessary adjustments to individual aggregate stockpile proportions during OAG concrete production when the gradation deviates from the optimized gradation requirements.

4.2.8. **Self-Consolidating Concrete (SCC)**. Provide SCC meeting the following requirements shown in Table 11 when approved for use in precast concrete. Use concrete with a slump flow that can be placed without vibration and will not segregate or excessively bleed.

Request approval to exceed the slump flow limits sufficiently in advance for proper evaluation by the Engineer.

Table 11
Mix Design Requirements for SCC

Tests	Test Method	Acceptable Limits
Slump Flow for Precast Concrete	ASTM C1611	22 to 27[1]
T_{50}, sec	ASTM C1611	2 to 7
VSI Rating	ASTM C1611	0 or 1
Passing Ability, in.	ASTM C1621	≤ 2
Segregation Column, %	ASTM C1610	≤ 10
Bleeding, %	ASTM C232	≤ 2.5

1. These slump flow limits are generally acceptable for most applications. However, slump flow limits may be adjusted during mix design approval process and when approved by the Engineer.

4.3. **Concrete Trial Batches**. Perform preliminary and final trial batches when required by the plans, or when previous satisfactory field data is not available. Submit previous satisfactory field data to the Engineer showing the proposed mix design conforms to specification requirements when trial batches are not required and before concrete is placed.

Perform preliminary and final trial batches for all self-consolidating concrete mix designs.

4.3.1. **Preliminary Trial Batches**. Perform all necessary preliminary trial batch testing when required, and provide documentation including mix design, material proportions, and test results substantiating the mix design conforms to specification requirements.

4.3.2. **Final Trial batches**. Make all final trial batches using the proposed ingredients in a mixer that is representative of the mixers to be used on the job when required. Make the batch size at least 50% of the mixer's rated capacity. Perform fresh concrete tests for air content and slump, and make, cure, and test strength specimens for compliance with specification requirements. Test at least one set of design strength specimens, consisting of 2 specimens per set, at 7-day, 28-day, and at least one additional age unless otherwise directed. Before placing, provide the Engineer the option of witnessing final trial batches, including the testing of the concrete. If not provided this option, the Engineer may require additional trial batches, including testing, before the concrete is placed.

Conduct all testing listed in Table 11 when performing trial batches for self-consolidating concrete. Make an additional mixture with 3% more water than the preliminary trial batch. Make necessary adjustments to the mix design if this additional mixture does not meet requirements of Table 11. Cast and evaluate mock-ups for precast concrete that are representative of the actual product as directed. Provide the Engineer the option of witnessing final trial batches, including the testing of the concrete and the casting of the mock-ups before placement. If not provided this option, the Engineer may require additional trial batches, including testing and mock-ups, before the concrete is placed.

Establish 7-day compressive strength target values using the following formula for each Class A, B, and E concrete mix designs to be used:

$$\text{Target value} = \text{Minimum design strength} \times \frac{\text{7 - day avg. trial batch strength}}{\text{28 - day avg. trial batch strength}}$$

Submit previous satisfactory field data, data from a new trial batch, or other evidence showing the change will not adversely affect the relevant properties of the concrete when changes are made to the type, brand, or source of aggregates, cement, SCM, water, or chemical admixtures. Submit the data for approval before making changes to the mix design. A change in vendor does not necessarily constitute a change in materials or source. The Engineer may waive new trial batches when there is a prior record of satisfactory performance with the ingredients. During concrete production, dosage changes of chemical admixtures used in the trial batches will not require a re-evaluation of the mix design.

The Contractor has the option of performing trial batches in conjunction with concrete placements except for SCC mixtures, when new trial batches are required during the course of the project. If the concrete fails to meet any requirement, the Engineer will determine acceptability and payment adjustments.

Establish the strength–maturity relationship in accordance with Tex-426-A when the maturity method is specified or permitted. When using the maturity method, any changes in any of the ingredients, including changes in proportions, will require the development of a new strength–maturity relationship for the mix.

4.3.3. **Mix Design of Record**. Once a trial batch or previously satisfactory field data substantiates the mix design, the proportions and mixing methods used become the mix design of record. Do not exceed mix design water-to-cementitious material ratio.

4.4. **Production Testing**.

4.4.1. **Aggregate Moisture Testing**. Determine moisture content per Tex-409-A or Tex-425-A for coarse, intermediate, and fine aggregates at least twice a week, when there is an apparent change, or for new shipments of aggregate. When aggregate hoppers or storage bins are equipped with properly maintained electronic moisture probes for continuous moisture determination, moisture tests per Tex-409-A or Tex-425-A are not required. Electronic moisture probes, however, must be verified at least every 90 days against Tex-409-A and be accurate to within 1.0% of the actual moisture content.

When producing SCC, and when aggregate hoppers or storage bins are not equipped with electric moisture probes, determine the moisture content of the aggregates before producing the first concrete batch each day. Thereafter, determine the moisture content every 4 hr. or when there is an apparent change while SCC is being produced.

4.4.2. **Aggregate Gradation Testing**. Perform a sieve analysis in accordance with Tex-401-A on each stockpile used in the blend at least one day before producing OAG concrete when producing optimized aggregate gradation concrete. Perform sieve analysis on each stockpile after every 10,000 cubic yards of OAG concrete produced. Provide sieve analysis data to the Engineer.

4.5. **Measurement of Materials**.

4.5.1. **Non-Volumetric Mixers**. Measure aggregates by weight. Correct batch weight measurements for aggregate moisture content. Measure mixing water, consisting of water added to the batch, ice added to the batch, water occurring as surface moisture on the aggregates, and water introduced in the form of admixtures, by volume or weight. Measure ice by weight. Measure cement and supplementary cementing materials in a hopper and on a separate scale from those used for other materials. Measure the cement first when measuring the cumulative weight. Measure concrete chemical admixtures by weight or volume. Measure batch materials within the tolerances of Table 12.

Table 12
Mix Design Batching Tolerances—Non-Volumetric Mixers

Material	Tolerance (%)
Cement, wt.	-1 to +3
SCM, wt.	-1 to +3
Cement + SCM (cumulative weighing), wt.	-1 to +3
Water, wt. or volume	±3[1]
Fine aggregate, wt.	±2
Coarse aggregate, wt.	±2
Fine + coarse aggregate (cumulative weighing), wt.	±1
Chemical admixtures, wt. or volume	±3

1. Allowable deviation from target weight not including water withheld or moisture in the aggregate. The Engineer will verify the water-to-cementitious material ratio is within specified limits.

Ensure the quantity measured, when measuring cementitious materials at less than 30% of scale capacity, is accurate to not less than the required amount and not more than 4% in excess. Ensure the cumulative quantity, when measuring aggregates in a cumulative weigh batcher at less than 30% of the scale capacity,

is measured accurate to ±0.3% of scale capacity or ±3% of the required cumulative weight, whichever is less.

Measure cement in number of bags under special circumstances when approved. Use the weights listed on the packaging. Weighing bags of cement is not required. Ensure fractional bags are not used except for small hand-mixed batches of approximately 5 cu. ft. or less and when an approved method of volumetric or weight measurement is used.

4.5.2. **Volumetric Mixers**. Provide an accurate method of measuring all ingredients by volume, and calibrate equipment to assure correct measurement of materials within the specified tolerances. Base tolerances on volume–weight relationship established by calibration, and measure the various ingredients within the tolerances of Table 13. Correct batch measurements for aggregate moisture content.

Table 13
Mix Design Batching Tolerances—Volumetric Mixers

Material	Tolerance
Cement, wt. %	0 to +4
SCM, wt. %	0 to +4
Fine aggregate, wt. %	±2
Coarse aggregate, wt. %	±2
Admixtures, wt. or volume %	±3
Water, wt. or volume %	±1

4.6. **Mixing and Delivering Concrete**.

4.6.1. **Mixing Concrete**. Operate mixers and agitators within the limits of the rated capacity and speed of rotation for mixing and agitation as designated by the manufacturer of the equipment. Provide concrete in a thoroughly mixed and uniform mass with a satisfactory degree of uniformity when tested in accordance with Tex-472-A.

Do not top-load new concrete onto returned concrete.

Adjust mixing times and batching operations as necessary when the concrete contains silica fume to ensure the material is completely and uniformly dispersed in the mix. The dispersion of the silica fume within the mix will be verified by the Construction Division, Materials and Pavements Section, using cylinders made from trial batches. Make necessary changes to the batching operations, if uniform dispersion is not achieved, until uniform and complete dispersion of the silica fume is achieved.

Mix concrete by hand methods or in a small motor-driven mixer when permitted, for small placements of less than 2 cu. yd. For such placements, proportion the mix by volume or weight.

4.6.2. **Delivering Concrete**. Deliver concrete to the project in a thoroughly mixed and uniform mass, and discharge the concrete with a satisfactory degree of uniformity. Conduct testing in accordance with Tex-472-A when there is a reason to suspect the uniformity of concrete and as directed.

Maintain concrete delivery and placement rates sufficient to prevent cold joints.

Adding chemical admixtures or the portion of water withheld is only permitted at the jobsite, under the supervision of the Engineer, to adjust the slump or slump flow of the concrete. Do not add water or chemical admixtures to the batch after more than an amount needed to conduct slump testing has been discharged. Turn the drum or blades at least 30 additional revolutions at mixing speed to ensure thorough and uniform mixing of the concrete. When this water is added, do not exceed the approved mix design water-to-cementitious material ratio.

Before unloading, furnish the delivery ticket for the batch of concrete containing the information required on Department Form 596, “Concrete Batch Ticket.” The Engineer will verify all required information is provided on the delivery tickets. The Engineer may suspend concrete operations until the corrective actions are

implemented if delivery tickets do not provide the required information. The Engineer will verify the design water-to-cementitious material ratio is not exceeded.

Begin the discharge of concrete delivered in truck mixers within the times listed in Table 14. Concrete may be discharged after these times provided the concrete temperature and slump meet the requirements listed in this Item and other pertinent Items. Perform these tests with certified testing personnel per Section 421.4.8.1., "Certification of Testing Personnel." Provide the Engineer the option of witnessing testing of the concrete. If not provided this option, the Engineer may require additional testing before the concrete is placed.

Table 14
Concrete Discharge Times

Fresh Concrete Temperature, °F	Max Time After Batching for Concrete Not Containing Type B or D Admixtures, min.	Max Time After Batching for Concrete Containing Type B or D Admixtures,[1] min.
90 and above	45	75
75 ≤ T < 90	60	90
T < 75	90	120

1. Concrete must contain at least the minimum manufacturer's recommended dosage of Type B or D admixture.

4.7. **Placing, Finishing, and Curing Concrete**. Place, finish, and cure concrete in accordance with the pertinent Items.

4.8. **Sampling and Testing of Concrete**. Unless otherwise specified, all fresh and hardened concrete is subject to testing as follows:

4.8.1. **Certification of Testing Personnel**. Contractor personnel performing testing must be either ACI-certified or qualified by a Department-recognized equivalent written and performance testing program for the tests being performed. Personnel performing these tests are subject to Department approval. Use of a commercial laboratory is permitted at the Contractor's option. All personnel performing testing using the maturity method must be qualified by a training program recognized by the Department before using this method on the job.

4.8.2. **Fresh Concrete**. Provide safe access and assistance to the Engineer during sampling. Fresh concrete will be sampled for testing at the discharge end if using belt conveyors or pumps. When it is impractical to sample at the discharge end, a sample will be taken at the time of discharge from the delivery equipment and correlation testing will be performed and documented to ensure specification requirements are met at the discharge end.

4.8.3. **Testing of Fresh Concrete**. Test for the fresh properties listed in Table 15.

Table 15
Fresh Concrete Tests

Tests	Test Methods
Slump[1]	Tex-415-A
Temperature[1]	Tex-422-A
Air Content[1,2]	Tex-414-A, Tex-416-A or ASTM C457

1. Job-control testing performed by the Contractor.
2. Only required when air-entrained concrete is specified on the plans.

Concrete with a slump lower than the minimum placement slump in Table 9 after the addition of all water withheld, or concrete exhibiting segregation and excessive bleeding will be rejected.

4.8.3.1. **Job-Control Testing**. Perform job-control testing as specified in Table 16 unless otherwise specified. Provide the Engineer the opportunity to witness the testing. The Engineer may require a retest if not given the opportunity to witness. Immediately notify the Engineer of any nonconformity issues. Furnish a copy of all test results to the Engineer daily.

Table 16
Job-Control Testing Frequencies

Concrete Placements	Frequency
Bridge Deck Placements	Test the first few loads, then every 60 cu. yd. or fraction thereof.
All Other Structural Class Concrete Placements	One test every 60 cu. yd. or fraction thereof per class per day.
Non-Structural Class Concrete Placements	One test every 180 cu. yd. or fraction thereof.

Immediately resample and retest the concrete slump when the concrete exceeds the slump range at time of placement. If the concrete exceeds the slump range after the retest, and is used at the Contractor's option, the Engineer will make strength specimens as specified in Article 421.5., "Acceptance of Concrete."

4.8.3.2. **Strength Specimen Handling**. Remove specimens from their molds and deliver Department test specimens to curing facilities within 24 to 48 hr. after molding, in accordance with pertinent test procedures unless otherwise shown on the plans or directed. Clean and prepare molds for reuse if necessary.

5. ACCEPTANCE OF CONCRETE

The Engineer will sample and test the fresh and hardened concrete for acceptance. The test results will be reported to the Contractor and the concrete supplier. Investigate the quality of the materials, the concrete production operations, and other possible problem areas to determine the cause for any concrete that fails to meet the required strengths as outlined below. Take necessary actions to correct the problem including redesign of the concrete mix. The Engineer may suspend all concrete operations under the pertinent Items if the Contractor is unable to identify, document, and correct the cause of the low strengths in a timely manner. Resume concrete operations only after obtaining approval for any proposed corrective actions. Concrete failing to meet the required strength as outlined below will be evaluated using the procedures listed in Article 421.6., "Measurement and Payment."

5.1. **Structural Class of Concrete**. For concrete classes identified as structural concrete in Table 8, the Engineer will make and test 7-day and 28-day specimens. Acceptance will be based on attaining the design strength given in Table 8.

5.2. **Class P and Class HES**. The Engineer will base acceptance in accordance with Item 360, "Concrete Pavement," and Item 361, "Repair of Concrete Pavement."

5.3. **All Other Classes of Concrete**. For concrete classes not identified as structural concrete in Table 8, the Engineer will make and test 7-day specimens. The Engineer will base acceptance on the 7-day target value established in accordance with Section 421.4.3., "Concrete Trial Batches."

6. MEASUREMENT AND PAYMENT

The work performed, materials furnished, equipment, labor, tools, and incidentals will not be measured or paid for directly but will be subsidiary to pertinent Items.

The following procedure will be used to evaluate concrete where one or more project acceptance test specimens fail to meet the required design strength specified in this Item or on the plans:

- The concrete for a given placement will be considered structurally adequate and accepted at full price if the average of all test results for specimens made at the time of placement meets the required design strength provided no single test result is less than 85% of the required design strength.
- The Engineer will perform a structural review of the concrete to determine its adequacy to remain in service if the average of all test results for specimens made at the time of placement is less than the required design strength or if any test results are less than 85% of the required design strength. If the in-situ concrete strength is needed for the structural review, take cores at locations designated by the

Engineer in accordance with Tex-424-A. The Engineer will test the cores. The coring and testing will be at the Contractor's expense.

- If all of the tested cores meet the required design strength, the concrete will be paid for at full price.
- If any of the tested cores do not meet the required design strength, but the average strength attained is determined to be structurally adequate, the Engineer will determine the limits of the payment adjustment using the following formula:

$$A = B_p\left[-5.37\left(\frac{S_a}{S_s}\right)^2 + 11.69\left(\frac{S_a}{S_s}\right) - 5.32\right]$$

where:
A = Amount to be paid per unit of measure for the entire placement in question
S_a = Actual average strength from cylinders or cores. Use values from cores, if taken.
S_s = Minimum required strength (specified)
B_p = Unit Bid Price

- If the structural review determines the concrete is not adequate to remain in service, the Engineer will determine the limits of the concrete to be removed.
- The decision to reject structurally inadequate concrete or to apply the payment adjustment factor will be made no later than 56 days after placement.

Item 422
Concrete Superstructures

1. DESCRIPTION

Construct reinforced concrete bridge slabs, decks, flat slabs, slab and girder units (pan formed), approach slabs, or other bridge superstructure elements as indicated.

2. MATERIALS

2.1. **Concrete**. Provide concrete conforming to Item 421, "Hydraulic Cement Concrete." Provide Class S or S (HPC) concrete for all cast-in-place concrete unless otherwise shown on the plans. Provide the class of concrete for precast components indicated on the plans or in pertinent governing Items.

2.2. **Reinforcing Steel**. Provide reinforcing steel in accordance with Item 440, "Reinforcement for Concrete."

2.3. **Structural Grout**. Provide grout in accordance with DMS-4675, "Cementitious Grouts and Mortars for Miscellaneous Applications" or as indicated on the plans.

2.4. **Expansion Joint Material**. Provide materials in accordance with DMS-6310, "Joint Sealants and Fillers."

- Provide preformed bituminous fiber expansion joint material unless indicated otherwise.
- Provide a Class 4, 5, or 7 low-modulus silicone sealant unless otherwise directed.
- Provide asphalt board that conforms to dimensions shown on the plans.
- Provide re-bonded neoprene filler that conforms to the dimensions shown on the plans.

2.5. **Foam Bedding Strips for Prestressed Concrete Panels**. Use extruded polystyrene conforming to ASTM C578, Type VI (40 psi compressive strength) or as specified.

Provide a manufacturer's certification or data sheet stating the foam meets these requirements. Use an adhesive or bonding agent compatible with polystyrene as recommended by the polystyrene manufacturer.

2.6. **Evaporation Retardants**. Provide evaporation retardants in accordance with DMS-4650, "Hydraulic Cement Concrete Curing Materials and Evaporation Retardants."

2.7. **Curing Materials**. Provide membrane curing compounds in accordance with DMS-4650, "Hydraulic Cement Concrete Curing Materials and Evaporation Retardants."

Provide cotton mats that consist of a filling material of cotton "bat" or "bats" (at least 12 oz. per square yard) completely covered with unsized cloth (at least 6 oz. per square yard) stitched longitudinally with continuous parallel rows of stitching spaced at less than 4 in., or tuft both longitudinally and transversely at intervals less than 3 in. Provide cotton mats that are free from tears and in good general condition. Provide a flap at least 6 in. wide consisting of 2 thicknesses of the covering and extending along one side of the mat.

Provide polyethylene sheeting that is at least 4 mils thick and free from visible defects. Provide opaque white sheeting when the ambient temperature during curing exceeds 90°F.

Provide burlap-polyethylene mats made from burlap impregnated on one side with a film of opaque white pigmented polyethylene, free from visible defects. Provide laminated mats that have at least one layer of an impervious material such as polyethylene, vinyl plastic, or other acceptable material (either as a solid sheet or impregnated into another fabric) and are free of visible defects.

Provide burlap material which complies with AASHTO M 182, Class 3 (10 oz. per square yard) with the following additions:

- Manila hemp may also be used to make burlap.
- Do not use burlap fabricated from bags.
- Do not use burlap containing any water soluble ingredient which will retard the setting time of concrete.

Provide used burlap complying with the requirements stated above, and that only has been used previously for curing concrete. “Like new” cleanliness is not expected, but contamination with any substance foreign to the concrete curing process, such as grease or oil, will be cause for rejection.

2.8. **Epoxy**. Provide epoxy materials that conform to DMS-6100, “Epoxies and Adhesives,” unless otherwise specified.

3. EQUIPMENT

3.1. **Fogging Equipment**. Use fogging equipment that can apply water in a fine mist, not a spray. Produce the fog using equipment that pumps water or water and air under high pressure through a suitable atomizing nozzle. Use hand-held mechanical equipment portable enough to use in the direction of any prevailing wind and adaptable for intermittent use to prevent excessive wetting of the concrete.

3.2. **Transporting and Placing Equipment**. Use appropriate transporting and placing equipment such as buckets, chutes, buggies, belt conveyors, pumps, or other equipment as necessary. Do not transport or convey concrete through equipment made of aluminum. Use carts with pneumatic tires for carting or wheeling concrete over newly placed slabs.

Use tremies that are watertight to control the fall of concrete and of large enough diameter to allow the placement of the concrete but less than 14 in. in diameter.

Use pumps with lines at least 5 in. inside diameter (I.D.) where Grade 2 or smaller coarse aggregate is used and at least 8 in. I.D. for Grade 1 coarse aggregate.

3.3. **Vibrators**. Use immersion-type vibrators for consolidation of concrete. Provide at least 1 standby vibrator for emergency use. Furnish vibrator head covered by a rubberized or elastomeric cover when used near epoxy coated reinforcing steel.

3.4. **Screeds and Work Bridges for Bridge Slabs**. Use a self-propelled transverse screed or a mechanical longitudinal screed for bridge slabs. Use transverse screeds that are able to follow the skew of the bridge for skews greater than 15° unless otherwise approved. Equip transverse screeds with a pan float. Manually operated screeding equipment may be used if approved for top slabs of culverts, small placements, or unusual conditions. Use screeds that are rigid and heavy enough to hold true to shape and have sufficient adjustments to provide for the required camber or section. Equip the screeds, except those of the roller drum type, with metal cutting edges.

Use sufficient work bridges for finishing operations for bridge slabs. Mount a carpet drag to a work bridge or a moveable support system that can vary the area of carpet in contact with the concrete. Use carpet pieces long enough to cover the entire width of the placement. Splice or overlap the carpet as necessary. Ensure enough carpet is in contact longitudinally with the concrete being placed to provide the desired surface finish. Use artificial grass-type carpeting with a molded polyethylene pile face with a blade length between 5/8 and 1 in. and minimum weight of 70 oz. per square yard. Ensure the carpet has a strong, durable backing not subject to rot and the facing is adequately bonded to the backing to withstand the intended use. A burlap drag, attached to the pan float on a transverse screed, may be used instead of the carpet drag.

3.5. **Temperature Recording Equipment**. Use strip chart temperature recording devices, recording maturity meters in accordance with Tex-426-A, or other approved devices that are accurate within ±2°F within the range of 32°F to 212°F.

3.6. **Artificial Heating Equipment**. Use artificial heating equipment as necessary for maintaining the concrete temperatures as specified in Section 422.4.6.11., "Placing Concrete in Cold Weather."

3.7. **Sawing Equipment**. Use sawing equipment capable of cutting grooves in completed bridge slabs and top slabs of direct traffic culverts. Provide grooves that are 1/8 to 3/16 in. deep, nominally 1/8 in. wide, and spaced at 1 in. Use sawing equipment capable of cutting grooves in hardened concrete within 18 in. of the barrier rail or curb.

3.8. **Spraying Equipment**. Use mechanically powered pressure sprayers with appropriate atomizing nozzles for the application of membrane curing. Mechanically driven spraying equipment, adaptable to the rail system used by the screeds, may be used for applying membrane curing to bridge slabs. Use hand-pressurized spray equipment equipped with 2 or 3 fan-spray nozzles if approved. Ensure the spray from each nozzle overlaps the spray from adjacent nozzles by approximately 50%.

3.9. **Concrete Testing Equipment**. Provide testing equipment for the Engineer's use in accordance with Section 421.3.3., "Testing Equipment."

4. CONSTRUCTION

Obtain approval for proposed construction methods before starting work. Approval of construction methods and equipment does not relieve the Contractor's responsibility for safety or correctness of methods, adequacy of equipment, or completion of work in full accordance with the Contract. Attend the pre-construction (pre-pour) meetings for bridge slabs conducted by the Engineer. Provide and obtain approval for proposed finishing methods, interim curing methods, and final curing methods.

Unless otherwise shown on the plans, it is the Contractor's option to perform testing on structural concrete (structural classes of concrete are identified in Table 8 of Section 421.4.1., "Classification of Concrete Mix Designs,") to determine the in-situ strength to address the schedule restrictions listed below. The Engineer may require the Contractor to perform this testing for concrete placed in cold weather. Make enough test specimens for Contractor-performed testing to ensure strength requirements are met for the operations listed below. Make at least 1 set of test specimens for each element cast each day. Cure these specimens under the same conditions as the portion of the structure involved for all stages of construction. Ensure safe handling, curing, and storage of all test specimens. Provide testing personnel, and sample and test the hardened concrete in accordance with Section 421.4.8., "Sampling and Testing of Concrete." The maturity method, Tex-426-A, may be used for in-situ strength determination for schedule restrictions if approved. Coring will not be allowed for in-situ strength determination for schedule restrictions. Provide the Engineer the opportunity to witness all testing operations. Report all test results to the Engineer.

If the Contractor does not wish to perform schedule restriction testing, the Engineer's 7-day lab-cured tests, performed in accordance with Article 421.5., "Acceptance of Concrete," will be used for schedule restriction determinations. The Engineer may require additional time for strength gain to account for field curing conditions such as cold weather.

4.1. **Schedule Restrictions and Inspection Hold-Points**.

4.1.1. **Placement of Superstructure Members**. Place or cast superstructure members after the substructure concrete has attained a compressive strength of 3,000 psi.

4.1.2. **Longitudinal Screeding of Bridge Slabs**. Place a longitudinal screed directly on previously placed concrete slabs to check and grade an adjacent slab only after the previously placed slab has aged at least 24 hr. Place and screed the concrete after the previously placed slabs have aged at least 48 hr. Maintain curing of the previously placed slabs during placement.

4.1.3. **Staged Placement of Bridge Slabs on Continuous Steel Units**. Ensure the previously placed concrete attains a compressive strength of 3,000 psi when staged placement of a slab is required or used before

placing the next stage placement. Multiple stages may be placed in a single day if approved by the Engineer of Record.

4.1.4. **Storage of Materials on the Structure**. Obtain approval to store materials on completed portions of a structure once a compressive strength of 3,000 psi has been attained. Maintain proper curing if materials will be stored on structures before completion of curing.

4.1.5. **Placement of Equipment and Machinery**. Do not place erection equipment or machinery on the structure until the concrete has attained the design strength specified in Section 421.4.1., "Classification of Concrete Mix Designs," unless otherwise approved.

4.1.6. **Carting of Concrete** Cart, wheel, or pump concrete over completed slabs after the completed concrete has attained a compressive strength of 3,000 psi. Maintain curing during these operations.

4.1.7. **Placing Bridge Rails**. Reinforcing steel and concrete for bridge rails may be placed on bridge slabs once the slab concrete has attained a compressive strength of 3,000 psi. Ensure the slab concrete has attained its design strength specified in Section 421.4.1., "Classification of Concrete Mix Designs," before placing railing concrete if slipforming methods are used for railing concrete.

4.1.8. **Opening to Construction Traffic**. Bridges may be opened to all construction traffic when the design strength specified in Section 421.4.1., "Classification of Concrete Mix Designs," has been attained if curing is maintained. Avoid crossing bridges at high speeds until railing concrete, if present, has attained a compressive strength of 3,000 psi.

4.1.9. **Opening to Full Traffic**. Bridges may be opened to the traveling public when the design strength specified in Section 421.4.1., "Classification of Concrete Mix Designs," has been attained for all structural elements including railing subject to impact from traffic and when curing has been completed for all slabs. Obtain approval before opening bridges to the traveling public.

4.1.10. **Inspection Hold-Points**. Notify Engineer of progress of work and when work is complete before beginning next stage of work.

- Beam erection and bracing
- Formwork, including setting of precast panels
- Placing reinforcing steel
- Screed dry run and pre-pour clear cover checks
- Attend pre-pour meeting conducted by the Engineer
- Post-curing crack inspection

4.2. **Forms**. Submit forming plans for decks or slabs on beams or girders, overhangs, cast-in-place spans, and bracing systems for girders when the overhang exceeds 3 ft. 6 in. Submit similar plans for other units of the superstructure as directed. Show all essential details of proposed forms and bracing. Have a licensed professional engineer design, seal, and sign these plans. Department approval is not required, but the Department reserves the right to request modifications to the plans. The Contractor is responsible for the adequacy of these plans.

Design job-fabricated formwork assuming a weight of 150 pcf for concrete, and include a minimum liveload allowance of 50 psf of horizontal surface of the form. Do not exceed 125% of the allowable stresses used by the Department for the design of structures.

Use conventional forms, permanent metal deck forms, or prestressed concrete panels for slabs on beams or girders unless indicated otherwise. Use permanent metal deck forms or conventional forms for thickened slabs, diaphragms, or other regions as shown on the plans where prestressed concrete panels are not used. Provide prestressed concrete panels as shown on the plans and in accordance with Item 424, "Precast Concrete Structural Members (Fabrication)." Provide copies of the precast panel layout drawings from the panel fabricator.

Use only material that is inert, non-biodegradable, and nonabsorptive for forms to be left in place.

Overhang form supports that transmit a horizontal force to a steel girder or beam or to a prestressed concrete beam are permitted provided a satisfactory structural analysis has been made of the effect on the girder or beam as indicated in the submitted formwork plans.

Use beam bracing as indicated on the plans when overhang brackets are used on prestressed concrete beam spans with slab overhangs not exceeding 3 ft. 6 in. Provide and design additional support or bracing for the outside beams regardless of the type of beam used for spans with overhangs exceeding this amount.

Attachment of forms or screed supports for bridge slabs to steel I-beams or girders may be by welding subject to the following requirements:

- Do not weld to tension flanges or to areas indicated on the plans.
- Weld in accordance with Item 448, “Structural Field Welding.”

When setting forms of any type take into account:

- deflections due to cast-in-place slab concrete and railing shown in the dead load deflection diagram,
- differential beam or girder deflections due to skew angles and the use of certain stay-in-place slab forming systems, and
- deflection of the forming system due to the wet concrete.

Securely stake forms to line and grade and maintain in position for bridge approach slabs. Rigidly attach inside forms for curbs to the outside forms.

Construct all forms to permit their removal without marring or damaging the concrete. Clean all forms and footing areas of any extraneous matter before placing concrete. Provide openings in forms if needed for the removal of laitance or foreign matter.

Treat the facing of all forms with bond-breaking coating of composition that will not discolor or injuriously affect the concrete surface. Take care to prevent coating of the reinforcing steel.

Complete all preparatory work before placing concrete.

4.2.1. **Precast Panels**. Profile each beam to determine the actual camber or sag of the beams before placing panels. Adjust the profile grade line, panel elevation, and bearing seat elevations as needed to obtain the required cover over the slab reinforcement and slab thickness while maintaining ride quality. Make adjustments over suitable increments when a profile grade line adjustment is necessary, depending on span lengths, so the revised grade line will produce a uniform profile and good riding qualities. Obtain approval for the grade adjustments before placement. Consider actual beam camber in adjacent spans or slab placements when adjusting the grade line. Inspect each panel before being placed for cracks and other damage. Refer to Section 424.4.3.1., “Defects and Breakage,” for rejection criteria due to cracking and other damage.

4.2.2. **Permanent Metal Decking**. Submit signed and sealed design calculations in addition to the required formwork drawings. Design and install formwork in accordance with the plans and formwork drawings. The plans will govern in cases where the plans and the formwork drawings conflict.

4.2.3. **Conventional Forms**. Provide properly seasoned good-quality lumber free from imperfections that would affect its strength or impair the finished surface of the concrete. Provide timber or lumber that meets or exceeds the requirements for species and grade in the submitted formwork plans.

Maintain forms or form lumber that will be reused so that it stays clean and in good condition. Do not use any lumber that is split, warped, bulged, or marred or that has any defect that will produce inferior work; remove such lumber from the work.

Use plywood at least 3/4 in. thick. Use plywood for forming surfaces that remain exposed that meets the requirements for B-B Plyform Class I or Class II Exterior of the U.S. Department of Commerce Voluntary Product Standard PS 1.

Space studs and joists so that the facing form material remains in true alignment under the imposed loads.

Place forms with the form panels symmetrically (long dimensions set in the same direction) for surfaces exposed to view and receiving only an ordinary surface finish as defined in Section 420.4.13., "Ordinary Surface Finish." Make horizontal joints continuous.

Make molding for chamfer strips or other uses of materials of a grade that will not split when nailed and can be maintained to a true line without warping. Dress wood molding on all faces. Fill forms at all sharp corners and edges with triangular chamfer strips measuring 3/4 in. on the sides unless otherwise shown on the plans.

4.3. **Placing Reinforcement**. Place reinforcement as provided in Item 440, "Reinforcement for Concrete." Do not weld reinforcing steel supports to I-beams or girders or to reinforcing steel except where shown on the plans.

4.4. **Drains**. Install and construct weep holes and roadway drains as shown on the plans.

4.5. **Extending Existing Slabs**. Verify pertinent dimensions and elevations of the existing structure before ordering any required materials.

4.5.1. **Removal**. Remove portions of the existing structure to the lines and dimensions shown on the plans or as directed. Dispose of these materials as shown on the plans or as directed. Remove any metal railing without damaging it, and stack it neatly on the right of way at locations that do not interfere with traffic or construction or at locations shown on the plans. All removed metal railing remains the property of the Department unless otherwise shown on the plans. Repair any portion of the remaining structure damaged as a result of the construction. Do not use explosives to remove portions of the existing structure unless approved in writing. Do not use a demolition ball, other swinging weight, or impact equipment unless shown on the plans. Use pneumatic or hydraulic tools for final removal of concrete at the "break" line. Use removal equipment, as approved that will not damage the remaining concrete.

4.5.2. **Reuse of Removed Portions of Structure**. Detach and remove all portions of the old structure that are to be incorporated into the extended structure to the lines and details as specified on the plans or as directed. Move the unit to be reused to the new location specified using approved methods. Place the reinforcement and extension concrete according to the plan details.

4.5.3. **Breaking Back Bridge Slabs**. Saw the top surface of the slab for bridge slabs and direct traffic slabs of box culverts along the "break" line to a depth of 1/2 in. before breaking back. Do not cut the reinforcement at the "break" line. Sever the concrete at the "break" line. Do not damage the remaining reinforcement within 1 lap length of the "break" line during removal of the designated portion of the existing structure.

4.5.4. **Splicing Reinforcing Steel**. Splice new reinforcing bars to exposed bars in the existing structure using lap splices in accordance with Item 440, "Reinforcement for Concrete," unless otherwise shown on the plans. The new reinforcing steel does not need to be tied to the existing steel where spacing or elevation does not match that of the existing steel provided the lap length is attained. Weld in accordance with Item 448, "Structural Field Welding," when welded splices are permitted. Install any required dowels in accordance with Section 422.4.6.10., "Installation of Dowels and Anchor Bolts."

4.5.5. **Concrete Preparation**. Roughen and clean concrete surfaces that are in contact with new construction before the placing of forms. Prepare these construction joint surfaces in accordance with Section 422.4.6.7., "Construction Joints."

4.6. **Placing Concrete**. Do not place concrete unless approval is obtained for the hold-point inspections as outlined in Section 422.4.1.10., "Inspection Hold-Points," and the pre-pour meeting has been conducted. Give the Engineer sufficient advance notice before placing concrete in any unit of the structure to permit the final inspection of forms, reinforcing steel placement, and other preparations. Obtain approval for proposed

curing methods based on forecast weather conditions for the expected duration of the pour and use the evaporation rate nomograph as mentioned below to determine the required curing options.

Follow the sequence of placing concrete shown on the plans or specified.

Do not place concrete when impending weather conditions would impair the quality of the finished work. Place concrete in early morning or at night or adjust the placement schedule for more favorable weather if conditions of wind, humidity, and temperature are such that concrete cannot be placed without the potential for plastic shrinkage cracking. Consult the evaporation rate nomograph in the Portland Cement Association's *Design and Control of Concrete Mixtures* or the evaporation rate spreadsheet available on the Department's website for shrinkage cracking potential. Adequately illuminate the entire placement site when mixing, placing, and finishing concrete in non-daylight hours as approved.

Furnish adequate shelter to protect the concrete against damage from rainfall or from freezing temperatures as outlined in this Item if changes in weather conditions require protective measures after work starts. Continue operations during rainfall only if approved. Use protective coverings for the material stockpiles. Cover aggregate stockpiles only to the extent necessary to control the moisture conditions in the aggregates.

Allow at least 1 curing day after the concrete has achieved initial set before placing strain on projecting reinforcement to prevent damage to the concrete.

4.6.1. **Placing Temperature**. Place superstructure concrete only when its temperature at the time of placement is between 50°F and 85°F. Increase the minimum placement temperature to 60°F if slag cement is used in the concrete.

4.6.2. **Transporting Time**. Begin the discharge of concrete delivered in truck mixers within the times listed in Table 14 of Item 421, "Hydraulic Cement Concrete."

4.6.3. **Workability of Concrete**. Place concrete with a slump as specified in Section 421.4.2.5., "Slump." Placing concrete with slump exceeding maximum specified may result in bridge deck cracking and be subject to Section 422.4.10., "Defective Work." Water may be added to the concrete before discharging any concrete from the truck to adjust for low slump provided the maximum mix design water-cement ratio is not exceeded. Mix concrete after introduction of any additional water or chemical admixtures in accordance with Section 421.4.6., "Mixing and Delivering Concrete." Do not add water or chemical admixtures after any concrete has been discharged.

4.6.4. **Transporting Concrete**. Use a method and equipment capable of maintaining the rate of placement shown on the plans or required by this Item to transport concrete to the forms. Transport concrete by buckets, chutes, buggies, belt conveyors, pumps, or other methods.

Protect concrete transported by conveyors from sun and wind to prevent loss of slump and workability. Shade or wrap with wet burlap pipes through which concrete is pumped as necessary to prevent loss of slump and workability.

Arrange and use chutes, troughs, conveyors, or pipes so the concrete ingredients will not be separated. Terminate such equipment in vertical downspouts, when necessary, to prevent segregation. Extend open troughs and chutes, if necessary, down inside the forms or through holes left in the forms.

Keep all transporting equipment clean and free from hardened concrete coatings. Discharge water used for cleaning clear of the concrete.

4.6.5. **Preparation of Surfaces**. Thoroughly wet all forms, prestressed concrete panels, T-beams, slab beams, and concrete box beams on which concrete is to be placed before placing concrete on them. Remove free water from the surface or beam lines before placing concrete. Provide surfaces that are in a moist, saturated surface-dry condition when concrete is placed on them.

Ensure the subgrade or foundation is moist before placing concrete for bridge approach slabs.

4.6.6. **Expansion Joints**. Construct joints and devices to provide for expansion and contraction in accordance with plan details and the requirements of this Section and Item 454, "Bridge Expansion Joints."

Prevent bridging of concrete or mortar around expansion joint material in bearings and expansion joints.

Use forms adaptable to loosening or early removal in construction of all open joints and joints to be filled with expansion joint material. Loosen these forms as soon as possible after final concrete set to permit free movement of the span without requiring full form removal and avoid expansion or contraction damage to the adjacent concrete.

Provide preformed fiber joint material or a high density foam in the vertical joints of the roadway slab, curb, median, or sidewalk when the plans show a Type A joint, and fill the top 1 in. with the specified joint sealing material unless noted otherwise. Install the sealer in accordance with Item 438, "Cleaning and Sealing Joints," and the manufacturer's recommendations.

Use light wire or nails to anchor any preformed fiber joint material to the concrete on 1 side of the joint.

Ensure that finished joints conform to the plan details with the concrete sections completely separated by the specified opening or joint material.

Remove all concrete within the joint opening soon after form removal and again where necessary after surface finishing to ensure full effectiveness of the expansion joint.

4.6.7. **Construction Joints**. A construction joint is formed by placing plastic concrete in direct contact with concrete that has attained its initial set. Monolithic placement means the manner and sequence of concrete placing does not create a construction joint.

Make construction joints of the type and at the locations shown on the plans. Do not make joints in bridge slabs not shown on the plans unless approved. Additional joints in other members are not permitted without approval. Place authorized additional joints using details equivalent to those shown on the plans for joints in similar locations.

Make construction joints square and normal to the forms unless otherwise required. Use bulkheads in the forms for all vertical joints.

Thoroughly clean the hardened concrete surface of all loose material, laitance, dirt, and foreign matter, and saturate it with water. Remove all free water and moisten the surface before concrete or bonding grout is placed against it. Ensure the surface of the existing concrete is in a saturated surface-dry (SSD) condition just before placing subsequent concrete. Prewet the existing concrete by ponding water on the surface for 24 hr. before placing subsequent concrete. Use high-pressure water blasting to achieve SSD conditions 15 to 30 min. before placing the concrete if ponding is not possible. An SSD condition is achieved when the surface remains damp when exposed to sunlight for 15 min.

Draw forms tight against the existing concrete to avoid mortar loss and offsets at joints.

Bonding agents are not required unless indicated otherwise. Coat the joint surface with bonding mortar, grout, epoxy, or other material as indicated on the plans or other Items if a bonding agent is required. Provide Type V epoxy per DMS-6100, "Epoxies and Adhesives," for bonding fresh concrete to hardened concrete. Place the bonding epoxy on a clean, dry surface, and place the fresh concrete while the epoxy is still tacky. Place bonding mortar or grout on a surface that is SSD, and place the concrete before the bonding mortar or grout dries. Place other bonding agents in accordance with the manufacturer's recommendations.

4.6.8. **Handling and Placing**. Minimize segregation of the concrete and displacement of the reinforcement when handling and placing concrete. Produce a uniform, dense, compact mass.

Do not allow concrete to free-fall more than 5 ft. Remove any hardened concrete splatter ahead of the plastic concrete.

Fill each part of the forms by depositing concrete as near its final position as possible. Do not deposit large quantities at one point and run or work the concrete along the forms.

Avoid cold joints in a monolithic placement. Sequence successive layers or adjacent portions of concrete so they can be vibrated into a homogeneous mass with the previously placed concrete before it sets.

4.6.9. **Consolidation**. Carefully consolidate concrete and flush mortar to the form surfaces with immersion type vibrators. Do not use vibrators that operate by attachment to forms or reinforcement except where approved on steel forms.

Vibrate the concrete immediately after deposit. Systematically space points of vibration to ensure complete consolidation and thorough working of the concrete around the reinforcement, embedded fixtures, and into the corners and angles of the forms. Insert the vibrator vertically where possible except for slabs where it may be inserted in a sloping or horizontal position. Vibrate the entire depth of each lift, allowing the vibrator to penetrate several inches into the preceding lift. Do not use the vibrator to move the concrete to other locations in the forms. Do not drag the vibrator through the concrete. Thoroughly consolidate concrete along construction joints by operating the vibrator along and close to but not against the joint surface. Continue the vibration until the concrete surrounding reinforcements and fixtures is completely consolidated. Hand-spade or rod the concrete if necessary to ensure flushing of mortar to the surface of all forms. Concentrate vibration efforts along the beams lines when precast concrete panels are used for deck construction.

4.6.10. **Installation of Dowels and Anchor Bolts**. Install dowels and anchor bolts by casting them in-place or by grouting with grout, epoxy, or epoxy mortar unless noted otherwise. Form or drill holes for grouting. Use only epoxy when installing horizontal dowels into the edges of slabs. Follow the manufacturer's recommended installation procedures for pre-packaged grout or epoxy anchor systems. Test anchors if required on the plans or by other Items.

Drill holes for anchor bolts to accommodate the bolt embedment required by the plans. Make holes for dowels at least 12 in. deep unless otherwise shown on the plans. Make the hole diameter at least twice the dowel or bolt diameter, but the hole need not exceed the dowel or bolt diameter plus 1-1/2 in. when using cementitious grout or epoxy mortar. Make the hole diameter 1/16 to 1/4 in. greater than the dowel or bolt diameter when using neat epoxy unless indicated otherwise by the epoxy manufacturer.

Thoroughly clean holes of all loose material, oil, grease, or other bond-breaking substance, and blow them clean with filtered compressed air. Use a wire brush followed by oil-free compressed air to remove all loose material from the holes, repeating as necessary until no more material is removed. Ensure holes are in a surface-dry condition when epoxy type materials are used and in a surface-moist condition when cementitious grout is used. Develop and demonstrate for approval a procedure for cleaning and preparing the holes for installation of the dowels and anchor bolts. Completely fill the void between the hole and dowel or bolt with grouting material. Follow exactly the requirements for cleaning outlined in the product specifications for pre-packaged systems.

Provide a Type III epoxy per DMS-6100, "Epoxies and Adhesives," when neat epoxy is used for anchor bolts or dowels. Provide Type VIII epoxy per DMS-6100, "Epoxies and Adhesives," when an epoxy grout is used. Provide grout, epoxy, or epoxy mortar as the binding agent unless otherwise indicated on the plans.

Provide other anchor systems as required on the plans.

4.6.11. **Placing Concrete in Cold Weather**. Protect concrete placed under weather conditions where weather may adversely affect results. Permission given by the Engineer for placing during cold weather does not relieve the Contractor of responsibility for producing concrete equal in quality to that placed under normal conditions. If concrete placed under poor conditions is unsatisfactory, remove and replace it as directed at Contractor's expense.

Do not place concrete in contact with any material coated with frost or with a temperature of 32°F or lower. Do not place concrete when the ambient temperature in the shade is below 40°F and falling unless approved. Place concrete when the ambient temperature in the shade is at least 35°F and rising or above 40°F.

Provide and install recording thermometers, maturity meters, or other suitable temperature measuring devices to verify all concrete is effectively protected. Maintain the temperature of the top surface of bridge slabs and top slabs of direct traffic culverts at 50°F or above for 72 hr. from the time of placement and above 40°F for an additional 72 hr.

Use additional covering, insulated forms, or other means and, if necessary, supplement the covering with artificial heating. Avoid applying heat directly to concrete surfaces. Cure as specified in Section 422.4.8., "Final Curing," during this period until all requirements for curing have been satisfied.

Have on hand all necessary heating and covering material, ready for use, before permission is granted to begin placement when impending weather conditions indicate the possible need for temperature protection. Distress caused by concrete drying out as a result of delayed set and strength gain associated with cold weather are a result of the Contractor's actions and are subject to repair in accordance with Section 422.4.10., "Defective Work."

4.6.12. **Placing Concrete in Hot Weather**. Use an approved Type B or D set retarding agent in all concrete for superstructures and top slabs of direct traffic culverts, except concrete containing slag cement, when the temperature of the air is above 85°F unless otherwise directed.

Keep the concrete at or below the maximum temperature at time of placement as specified above. Sprinkle and shade aggregate stockpiles or use ice, liquid nitrogen systems, or other approved methods as necessary to control the concrete temperature.

4.6.13. **Placing Concrete in Superstructure**. Place simple span bridge slabs without transverse construction joints by using either a self-propelled transverse finishing machine or a mechanical longitudinal screed unless otherwise shown on the plans. Use of manually operated screeding equipment may be permitted for small placements or for unusual conditions such as narrow widening, variable cross slopes, or transitions. Support the screed adequately on a header or rail system stable enough to withstand the longitudinal or lateral thrust of the equipment. Adjust the profile grade line as necessary to account for variations in beam camber and other factors to obtain the required slab thickness and concrete cover over the slab reinforcement. Set beams and verify their surface elevations in a sufficient number of spans so that when adjustment is necessary, the profile grade line can be adjusted over suitable increments to produce a smooth riding surface. Take dead load deflection into account in setting the grades of headers and rail systems. Use construction joints, when required or permitted for slab placements on steel or prestressed concrete beams, as shown on the plans. Release falsework under the spans before placing concrete on steel girder or truss spans, and swing the spans free on their permanent supports.

Provide additional camber to offset the initial and final deflections of the span as indicated on the plans for concrete flat slab, concrete slab, and girder spans cast-in-place on falsework. Provide camber of approximately 3/8 in. for 30-ft. spans and 1/2 in. for 40-ft. spans to offset initial and final deflections for concrete slab and girder spans using pan forms unless otherwise directed. Provide a camber of 1/8 in. for 10-ft. spans but no more than 1/2 in. for concrete flat slab, concrete slab, and girder spans not using pan forms when dead load deflection is not shown on the plans.

Provide a camber of 1/4 in. in addition to deflection for slabs without vertical curvature on steel or prestressed concrete beams. Provide camber for specified vertical curvature and transverse slopes.

Make 1 or more passes with the screed over the bridge slab segment before placing concrete on it to ensure proper operation and maintenance of grades and clearances. Use an approved system of checking to detect any vertical movement of the forms or falsework. Maintain forms for the bottom surface of concrete slabs, girders, and overhangs to the required vertical alignment during concrete placing.

Level, strike off, and screed the surface while carrying a slight excess of concrete ahead of the screed to fill all low spots as soon as the concrete has been placed and vibrated in a section wide enough to permit working. Move longitudinal screeds across the concrete with a saw-like motion while their ends rest on headers or templates set true to the roadway grade or on the adjacent finished slab. Move transverse screeds longitudinally approximately 1/5 of the drum length for each complete out-and-back pass of the carriage. Screed the surface of the concrete enough times and at intervals to produce a uniform surface true to grade and free of voids.

Fog unformed surfaces of slab concrete in bridge slabs and in top slabs of direct traffic culverts from the time of initial strikeoff of the concrete until finishing is completed and required interim curing is in place. Do not use fogging as a means to add finishing water and do not work moisture from the fog spray into the fresh concrete.

Retard the concrete for simple spans only if necessary to complete finishing operations or as required by this Section. Bring the top of curb and sidewalk section to the correct camber and alignment when filling curb forms, and finish them as described in this Item.

4.6.13.1. **Transverse Screeding**. Install rails for transverse finishing machines that are supported from the beams or girders so the supports may be removed without damage to the slab. Prevent bonding between removable supports and the concrete in an acceptable manner. Do not allow rail support parts that remain embedded in the slab to project above the upper mat of reinforcing steel. Rail or screed supports attached to I-beams or girders are subject to the requirements of this Item. Place concrete at a minimum rate of 30 ft. of bridge slab per hour for transverse screeding unless otherwise shown on the plans. Deposit concrete parallel to the skew of the bridge so all girders are loaded uniformly along their length. Deposit slab concrete between the exterior beam and adjacent beam before placing concrete in the overhang portion of the slab. Furnish personnel and equipment capable of placing, finishing, and curing the slab at an acceptable rate to ensure compliance with the specifications. Place concrete in transverse strips. Start placement at the lowest end on profile grades greater than 1-1/2%.

At the Contractor's option, attach a pan drag and either a carpet or burlap drag to the screed assembly to float and provide surface micro-texture in one operation. Adjust the contact pressure of the pan drag to smooth high spots and fill any depressions left by the screed. Adjust the weight or position of the carpet or burlap drag to produce a smooth sandy micro-texture without blemishes, marks, or scratches deeper than 1/16 in. Fill screed rail support holes and holes from the Engineer's depth checks for slab thickness and reinforcing cover with concrete, and finish them to match the rest of the slab.

4.6.13.2. **Longitudinal Screeding**. Use of temporary intermediate headers will be permitted for placements over 50 ft. long if the rate of placement is rapid enough to prevent a cold joint and if these headers are designed for easy removal to permit satisfactory consolidation and finish of the concrete at their locations unless otherwise shown on the plans. Deposit slab concrete between the exterior beam and the adjacent beam before placing concrete in the overhang portion of the slab. Place concrete in longitudinal strips starting at a point in the center of the segment adjacent to 1 side except as this Section indicates, and complete the strip by placing uniformly in both directions toward the ends. Start placing at the lowest end for spans on a profile grade of 1-1/2% or more. Use strips wide enough that the concrete within each strip remains plastic until placement of the adjacent strip. Place the concrete in proper sequence to be monolithic with the adjacent longitudinal strips of the slabs where monolithic curb construction is specified.

4.6.13.3. **Placements on Continuous Steel Units**. Place slabs on continuous steel units in a single, continuous operation without transverse construction joints using a self-propelled transverse finishing machine or a mechanical longitudinal screed unless otherwise shown on the plans. Retard the initial set of the concrete sufficiently to ensure concrete remains plastic in at least 3 spans immediately preceding the slab being placed. Use construction joints, when required for slab placements on steel beams or girders, as shown on the plans. Ensure the previously placed concrete attains a compressive strength of 3,000 psi when staged placement of a slab is required on the plans before placing the next stage concrete. Multiple stages may be placed in a single day if approved. Use an approved placing sequence that will not overstress any of the supporting members where plans permit staged placing without specifying a particular order of placement.

4.6.13.4. **Slab and Girder Units**. Place girders, slab, curbs of slab, and girder spans monolithically unless otherwise shown on the plans. Fill concrete girder stems first, and place the slab concrete within the time limits specified in this Item. Place concrete in the stems for a short distance if using a transverse screed, and then place the concrete in transverse strips. Fill the outside girder stem first, beginning at the low end or side, if using a longitudinal screed, and continue placement in longitudinal strips.

4.7. **Finish and Interim Curing of Bridge Slabs**. Obtain approval of the proposed interim curing methods, equipment, and materials at the pre-pour meeting before placing concrete. Take into account forecast weather conditions to determine the interim curing methods to use.

Use work bridges or other suitable facilities to perform all finishing operations and to provide access, if necessary, for the Engineer to check measurements for slab thickness and reinforcement cover.

Work the screeded surface to a smooth finish with a long-handled wood or metal float or hand-float it from work bridges over the slab. Floating may not be necessary if the pan float attached to a transverse screed produces an acceptable finish. Avoid overworking the surface of the concrete. Avoid use of finish water.

Perform sufficient checks, witnessed by the Engineer, with a long-handled 10-ft. straightedge on the plastic concrete to ensure the final surface will be within specified tolerances. Make the check with the straightedge parallel to the centerline. Lap each pass half over the preceding pass. Remove all high spots, and fill and float all depressions over 1/16 in. deep with fresh concrete. Continue checking and floating until the surface is true to grade and free of depressions, high spots, voids, or rough spots. Fill screed-rail support holes with concrete, and finish them to match the top of the slab.

Provide a uniform micro-texture using a carpet drag, burlap drag, or broom finish. Finish the surface to a smooth sandy texture without blemishes, marks, or scratches deeper than 1/16 in. Apply the surface texturing using a work bridge or platform immediately after completing the straightedge checks. Draw the carpet or burlap drag longitudinally along the concrete surface, adjusting the surface contact area or pressure to provide a satisfactory coarsely textured surface. A broom finish may be performed using a fine bristle broom transversely. For bridge approach slabs the carpet drag, burlap drag, or broom finish may be applied either longitudinally or transversely.

Evaporation protection is required if the evaporation rate exceeds 0.10 lbs./sf./hr. based on the *Evaporation Calculation for Concrete Worksheet* as shown on the Department's website, the evaporation rate nomograph in the Portland Cement Association's *Design and Control of Concrete Mixtures* or if indicated on the plans.

4.7.1. **Evaporation Protection**. Use one of the following methods for evaporation protection.

4.7.1.1. **Evaporation Retardant**. Coat the concrete surface immediately after the carpet or burlap drag, or broom finish with a single application of evaporation retardant at a rate recommended by the manufacturer. Do not allow more than 10 min. to elapse between the texturing at any location and application of evaporation retardant. The evaporation retardant may be applied using the same work bridge used for surface texturing. Do not work the concrete surface once the evaporation retardant has been applied.

4.7.1.2. **Wet Burlap**. Place pre-wet burlap no more than 10 ft. behind the finishing operation. A work bridge may be required to avoid marring the surface. Ensure the wet burlap covers the entire surface. Use sprayers, hoses, sprinklers, or other similar methods to keep the burlap continuously wetted until application of the final curing.

4.7.2. **Interim Curing**. Apply interim curing using one of the following options after applying the evaporation protection (if needed):

4.7.2.1. **Membrane Cure**. Apply membrane interim curing at a rate of approximately 180 sq. ft. per gallon. Apply before the water sheen disappears but do not place over standing water. Fog as necessary to maintain the wet sheen. Do not spray membrane curing on a dry surface.

4.7.2.2. **Wet Burlap**. Place pre-wet burlap no more than 10 ft. behind the finishing operation. Burlap used for evaporation protection will also be considered as the interim curing.

4.8. **Final Curing**. Obtain approval of the proposed curing methods, equipment, and materials at the pre-pour meeting before placing concrete. Inadequate curing or facilities may delay all concrete placements on the job until remedial action is taken. Apply final curing as soon as possible after interim curing without damaging the surface finish. Check the adequacy of the curing each day of the curing period. Take corrective action or modify the curing methods as needed to maintain a moist concrete surface.

A curing day is a calendar day when the temperature, taken in the shade away from artificial heat, is above 50°F for at least 19 hr. or, on colder days if the temperature of all surfaces of the concrete is maintained above 40°F, for the entire 24 hr. The required curing period begins when all concrete has attained its initial set. Tex-440-A may be used to determine when the concrete has attained its initial set.

Cure all superstructure concrete according to the following, unless otherwise shown on the plans:

- Concrete using Type I or III cement: 8 days
- Concrete using Type I/II or II cement: 10 days
- Concrete with any type of SCM: 10 days

Place polyethylene sheeting, burlap-polyethylene blankets, laminated mats, or insulating curing mats in direct contact with the slab when the air temperature is expected to drop below 40°F during the first 72 hr. of the curing period. Weigh down these curing materials with dry mats to maintain direct contact with the concrete and provide insulation against cold weather. Supplemental heating or insulation may be required in cold and wet weather if the insulating cotton mats become wet or the concrete drops below the specified curing temperature. Avoid applying heat directly to concrete surfaces.

Use one of the following water curing methods for final curing. Keep all exposed surfaces of the concrete wet continuously for the required curing time. Use water for curing that meets the requirements for concrete mixing water in Section 421.2.5., “Water.” Do not use seawater or water that stains or leaves an unsightly residue.

4.8.1. **Cotton Mats**. Keep the concrete continuously wet by maintaining wet cotton mats in direct contact with the concrete for the required curing time. Weight the mats adequately to provide continuous contact with all concrete. Cover surfaces that cannot be cured by direct contact with mats, forming an enclosure well anchored to the forms or ground so outside air cannot enter the enclosure. Provide sufficient moisture inside the enclosure to keep all surfaces of the concrete wet. Use of soaker hoses and plastic covering is acceptable provided the concrete surface remains continuously wet for the required curing duration.

4.8.2. **Burlap Mats**. The burlap used for interim curing may also be used for final curing if kept continuously wetted and completely covered with plastic sheeting. Overlap plastic sheeting and weigh down sufficiently so air cannot get under the plastic.

4.8.3. **Burlap-Polyethylene Mats**. Place these mats over soaker hoses or other similar methods to keep the concrete surface wetted for the duration of the curing period. Overlap the mats and weight down sufficiently so air cannot get under the mats.

4.9. **Removal of Forms and Falsework**. Forms for vertical surfaces may be removed after the concrete has aged 12 hr. after initial set provided the removal can be done without damage to the concrete unless otherwise directed.

Remove forms for inside curb faces and for bridge rails whenever removal can be done without damage to the curb or railing.

Leave in place weight-supporting forms and falsework spanning more than 1 ft. except as directed otherwise until the concrete has attained a compressive strength of 2,500 psi. Remove forms for other structural components as necessary.

Forms or parts of forms may be removed only if constructed to permit removal without disturbing forms or falsework required to be left in place for a longer period on other portions of the structure.

Remove all metal appliances used inside forms for alignment to a depth of at least 1/2 in. from the concrete surface. Make the appliances so that metal may be removed without undue chipping or spalling of the concrete, and so that it leaves a smooth opening in the concrete surface when removed. Do not burn off rods, bolts, or ties.

Remove all forms and falsework unless otherwise directed.

Apply an ordinary surface finish as the final finish to the bottom of bridge slabs between girders or beams, and vertical and bottom surfaces of interior concrete beams or girders unless otherwise noted.

Form marks and chamfer edges do not need to be smoothed for the bottom of bridge slabs between girders or beams. Remove all fins, runs, drips, or mortar from surfaces that will be exposed.

4.10. **Defective Work**. The Contractor is responsible for the ride quality of the finished bridge slab. The Engineer will use a 10 ft. straightedge (1/8 in. in 10 ft.) to verify ride quality and determine locations where corrections are needed. Submit a plan for approval to produce a ride of acceptable quality if the Engineer determines the ride quality is unacceptable. Make all corrections for ride before saw-cutting grooves.

Repair defective work as soon as possible. Remove and replace at the expense of the Contractor any defect that cannot be repaired to the satisfaction of the Engineer.

The Engineer will inspect the deck or slab for plastic shrinkage and settlement cracking after completion of final curing and within 5 days after curing mats are removed. Seal any noted shrinkage cracks attributable to Contractor placing, curing, and finishing practices using gravity feed crack repair as directed in accordance with Item 780, “Concrete Crack Repair,” at no cost to the Department. Transverse cracks over interior bents in continuous slab units do not need to be sealed in this manner.

4.11. **Final Surface Texture**. Saw-cut grooves in the hardened concrete of bridge slabs, bridge approach slabs, and direct traffic culverts to produce the final texturing after completion of the required curing period unless otherwise noted. Cut grooves perpendicular to the structure centerline. Cut grooves across the slab within 18 in. of the barrier rail, curb, or median divider. Adjust groove cutting at skewed metal expansion joints in bridge slabs by using narrow-width cutting heads so all grooves end within 6 in. of the joint, measured perpendicular to the centerline of the metal joint. Leave no ungrooved surface wider than 6 in. adjacent to either side of the joint. Ensure the minimum distance to the first groove, measured perpendicular to the edge of the concrete joint or from the junction between the concrete and the metal leg of the joint, is 1 in. Cut grooves continuously across construction joints or other joints in the concrete less than 1/2 in. wide. Apply the same procedure described above where barrier rails, curbs, or median dividers are not parallel to the structure centerline to maintain the 18 in. maximum dimension from the end of the grooves to the gutter line. Cut grooves continuously across formed concrete joints. Provide either a carpet drag or broom finish for micro-texture when saw-cut grooves are not required on the plans. In this case ensure an adequate and consistent micro-texture is achieved by applying enough weight to the carpet and keeping the carpet or broom from getting plugged with grout. For surfaces that do not have adequate texture, the Engineer may require corrective action including diamond grinding or shot blasting.

Give a carpet drag, burlap drag, or broom finish to all concrete surfaces to be overlaid when the plans call for a concrete overlay (CO) to be placed on the slab (new construction). Saw-grooving is not required in this case. Provide an average texture depth for the finish of approximately 0.035 in. with no individual test falling below 0.020 in., unless otherwise shown on the plans, when tested in accordance with Tex-436-A. Revise finishing procedures to produce the desired texture if the texture depth falls below what is intended.

Give all concrete surfaces to be covered a lightly textured broom or carpet drag finish when the plans require an asphalt seal, with or without overlay, on the slab (new construction). Provide an average texture depth of approximately 0.025 in. when tested in accordance with Tex-436-A.

5. MEASUREMENT

Reinforced concrete slabs or decks on girders, beams, slab beams, double-T beams, or box beams placed under this Item will be measured by the square foot of slab surface area using the nominal dimensions and configuration shown on the plans. Transverse measurement will be made from outer edge of slab to outer edge of slab (including raised median and sidewalk sections). Longitudinal measurement will be made between ends of units or spans. Diaphragms, haunch concrete, reinforcement, and optional steel diaphragms will be considered as a portion of the slab unless otherwise shown. An estimated quantity for the haunch between the slab and beams will be included for the Contractor's information only. No measurement will be made during construction for variation in the amount of haunch concrete due to variations in camber of the beams.

Approach slabs and cast-in-place superstructure elements including flat slabs, slab and girder units (pan formed), and shear keys will be measured by the cubic yard. For slab and girder spans using pan forms, a quantity will be included for the screed setting required to provide proper camber in the roadway surface after form removal.

This is a plans quantity measurement Item. The quantity to be paid is the quantity shown in the proposal unless modified by Article 9.2., "Plans Quantity Measurement." Additional measurements or calculations will be made if adjustment of quantities is required.

The quantities of concrete and reinforcing steel shown on the plans are based on a conventionally formed slab. These quantities include amounts for concrete diaphragms, brackets and other required attachments, and haunch concrete when required, based on the profile grade, theoretical camber, and dead load deflection of the beams. No additional measurement will be made for concrete or reinforcing steel due to a variation in camber of the beams from theoretical camber, or for additional quantities required by optional methods of forming.

Additional concrete that may be required by an adjustment of the profile grade line during construction, to ensure proper slab thickness, will not be measured for payment.

6. PAYMENT

The work performed and materials furnished in accordance with this Item and measured as provided under "Measurement" will be paid for at the unit price bid for the various superstructure elements specified. This price is full compensation for furnishing, hauling, mixing, placing, curing, and finishing concrete; furnishing and placing reinforcing steel; grouting and pointing; furnishing and placing drains and expansion joint material (except where specifically furnished under another Item); furnishing and placing metal flashing strips; forms (removable and permanent) and falsework; prestressed concrete panels; furnishing and placing concrete and reinforcement for raised medians, sidewalks, sign mounts, luminaire brackets, and other concrete appurtenances; removing designated portions of existing slab; cleaning, bending, and cutting exposed existing reinforcing steel; welding reinforcing steel; doweling; cleaning and preparing concrete surfaces; and equipment, labor, tools, and incidentals.

Price will be adjusted in accordance with Section 421.6., "Measurement and Payment," when required to address non-compliance of project acceptance testing.

Diaphragm concrete will not be paid for directly but is subsidiary to the slab unless otherwise shown on the plans.

Structural steel, anchor bolts, armor joints, sealed expansion joints, rail (including the concrete parapet portion), and concrete median barrier will be measured and paid for in accordance with pertinent bid items.

In addition to the work described above, for extending structures the unit prices bid is full compensation for removing and disposing of the designated portion of the existing structure; removing, stockpiling and replacing headwall units for reuse; cleaning, bending, and cutting of exposed reinforcing steel; splicing or

welding of new reinforcing steel to existing reinforcing steel; installation of dowels; and cleaning and preparing existing concrete surfaces.

Item 424
Precast Concrete Structural Members (Fabrication)

1. DESCRIPTION

Fabricate precast prestressed and precast nonstressed concrete members. This Item, in conjunction with DMS-7300, "Precast Concrete Fabrication Plants," applies to both multi-project and project-specific fabrication plants. For this Item, the following definitions apply:

- **Prestressing**. The introduction of internal stresses (pre-tensioning or post-tensioning) into a structural member by tensioning and anchoring strands, bars, or wires to counteract the stresses resulting from the applied load.
- **Pre-Tensioning**. The application of prestressing force to the tensioning devices before casting concrete.
- **Post-Tensioning**. The application of prestressing force to the tensioning devices after concrete has hardened.
- **Tendon**. Any single unit used to apply prestressing force to the member. For post-tensioned units, a tendon is a bar, group of wires, or group of strands with common end anchorage.
- **Multi-Project Fabrication Plant**. A facility at an offsite location that fabricates precast prestressed or precast nonstressed members. This definition also applies to single Contract offsite facilities.
- **Project-Specific Fabrication Plant**. A temporary facility at or near the project location that fabricates precast prestressed or precast nonstressed members for only one Contract. This definition may be applied to temporary facilities that fabricate for multiple Contracts, if approved.
- **Nonstressed Members**. Precast concrete members that have not been pre-tensioned or post-tensioned.
- **Prestressed Members**. Precast concrete members fabricated by the process of pre-tensioning, post-tensioning, or a combination of both methods.
- **Minor Prestressed Members**. Includes piling, bridge deck panels, and sound wall panels.
- **Major Prestressed Members**. Includes all other prestressed members not listed as minor prestressed members.
- **I-Beams**. For this specification all I-girders and bulb-tee beams are referred to as I-beams.
- **Self-Consolidating Concrete (SCC)**. A highly workable concrete that can flow through densely reinforced or complex structural elements under its own weight and adequately fill voids without segregation or excessive bleeding without the need for vibration.
- **Temperature Probe**. Thermocouple for measuring concrete temperature or air temperature.
- **Temperature Recording Device**. Data logger for recording temperatures from the temperature probes.

2. EQUIPMENT

2.1. **Field Office and Inspection Laboratory**. Provide a field office and inspection laboratory for multi-project and project-specific fabrication plants in accordance with DMS-7300, "Precast Concrete Fabrication Plants."

2.2. **Furnishings and Laboratory Equipment**. Provide furnishings and laboratory equipment for multi-project and project-specific fabrication plants in accordance with DMS-7300, "Precast Concrete Fabrication Plants."

2.3. **Plant Facilities**. Provide plant facilities for multi-project and project-specific fabrication plants that produce prestressed members in accordance with DMS-7300, "Precast Concrete Fabrication Plants."

2.4. **Batch Plant**. Provide batch plant onsite for SCC construction unless otherwise approved. Do not use volumetric mixers for SCC.

3. MATERIALS

Furnish materials in accordance with Item 425, "Precast Prestressed Concrete Structural Members," and other pertinent Items.

4. CONSTRUCTION

4.1. **General Requirements**.

4.1.1. **Shop Drawings**. Prepare and electronically submit shop drawings before fabrication as documented in the *Guide to Electronic Shop Drawing Submittal* available on the Bridge Division website. Provide one complete approved 11 × 17-in. set in hardcopy to the Department inspector at the fabrication plant. Stamp it "For Construction Division Inspector." The Engineer may require additional complete hardcopy sets.

Provide a title block on each sheet in the lower right corner with the following information:

- sheet index data shown on lower right corner of the project plans,
- sheet numbering for shop drawings,
- name of structure or stream,
- name of owner or developer,
- name of fabricator or supplier, and
- name of Contractor.

4.1.1.1. **Prestressed Members**. Furnish shop drawings for prestressed members unless otherwise shown on the plans or in other Items. Submit the proposed designs on forms furnished by the Department when optional designs are permitted by the plans. Obtain approval of these designs before casting. Approval of optional designs does not relieve the Contractor from the responsibility of furnishing a satisfactory completed structure. Provide submittals for precast post-tensioned members in accordance with this specification and Item 426, "Post-Tensioning."

4.1.1.2. **Nonstressed Members**. Furnish shop drawings for nonstressed members when required by the plans or pertinent Items.

4.1.2. **Plant Approval**.

4.1.2.1. **Plant Submittals**. Provide submittals in accordance with DMS-7300, "Precast Concrete Fabrication Plants," for each particular plant operation. This requirement does not apply to project-specific nonstressed member fabrication plants.

4.1.2.2. **Plant Audits**. Multi-project and project-specific fabrication plants must pass initial and periodic Department-directed plant audits in accordance with DMS-7300, "Precast Concrete Fabrication Plants."

4.1.3. **Notice of Beginning Work**. Give adequate notice before beginning work as specified in Table 1. Include a schedule for all fabrication processes and dates when inspections are to occur.

Table 1
Notice of Beginning Work

Plant Location	Notice Required
In Texas	7 days
In the contiguous United States	21 days
Outside the contiguous United States	60 days

Perform no Department work in the plant before the Engineer authorizes fabrication. The Contractor must bear all Department travel costs when changes to their fabrication or inspection schedules are not

adequately conveyed to the Department. When fabrication is performed outside of the contiguous 48 states, the additional cost of inspection will be in accordance with Article 6.4., "Sampling, Testing, and Inspection."

4.1.4. **Personnel Qualifications**. Provide qualified personnel in accordance with DMS-7300, "Precast Concrete Fabrication Plants," for each particular plant operation.

4.1.5. **Quality Responsibilities**. The quality responsibilities for the Contractor for each particular plant operation will be in accordance with DMS-7300, "Precast Concrete Fabrication Plants."

4.2. **Fabrication**. Prepare a casting schedule on Department-approved forms per DMS-7300, "Precast Concrete Fabrication Plants," and submit it daily to the Department before fabrication. This requirement does not apply to project-specific minor prestressed member or project-specific nonstressed member fabrication plants. Perform fabrication during daylight hours unless the production site has an approved lighting system. Submit lighting details electronically to the Engineer for review before installing lighting system. Allow for plant and Department inspection in accordance with Item 6, "Control of Materials."

4.2.1. **Forms**. Design forms to prevent damage to the concrete from restraint as the concrete shrinks, from form expansion and contraction from thermal changes, from stripping operations, and from dimensional changes due to pre-tensioning. Forms, regardless of material, must conform to the profiles, dimensions, and tolerances of the finished product as specified on the plans and in this Item. Maintain forms free from dents, grease, or other foreign materials that may affect the appearance of the member, and clean forms thoroughly before each casting operation and immediately before applying a form-release agent.

4.2.1.1. **External Forms**. Construct side and bottom forms of steel unless otherwise approved or noted on the plans. Timber forms, when permitted, must meet the requirements of Section 420.4.4., "Forms." End headers may be of other material as approved.

Construct forms with sufficient thickness, external bracing and stiffeners, and anchorage to withstand the forces generated during concrete placement and consolidation. Do not stabilize forms with bracing and holding devices that will remain in the finished member.

Provide corners with a chamfer or radius where shown on the plans.

Maintain forms sufficiently mortar-tight to prevent damage that requires repair to the finished product. Where sections of forms will be joined, an offset of 1/16 in. for flat surfaces and 1/8 in. for corners and bends is permitted. Longitudinal form joints in prestressed concrete beams are not permitted except for in the side forms of slab beams, decked slab beams, box beams, and X-beams or as shown on the plans. Do not allow vertical or horizontal gaps or offsets to exceed 1/4 in. between adjacent sections of built-up end headers.

Check the grade and alignment of forms each time they are set, and maintain them during placement of concrete.

Apply a form-release agent, in accordance with the manufacturer's recommendations, to the facing of forms before placing concrete. Use a form-release agent that facilitates form removal and does not affect any required coating, painting, or color-staining operations. Do not use materials that appreciably stain or react with the concrete. Remove excess form-release agent from the form surface before casting, and ensure it does not contaminate strands, reinforcing steel, and embedments. Use a clear form-release agent of the same brand throughout the casting of retaining wall panels per structure, unless it can be shown that a different form-release agent does not change the appearance of the concrete.

Construct the forms to facilitate removal of members without damage to the concrete.

Construct and maintain the soffit (liner) to provide a maximum 1/4 in. variation from the theoretical plane, and do not allow the soffit to vary more than 1/4 in. between any 2 points in any 50-ft. length.

At the Contractor's option, construct side forms for bridge deck panels and prestressed piling with a draft for ease of product removal. Maintain product dimensional tolerances per Table 3. A maximum 1/4 in. draft is allowed for bridge deck panels.

4.2.1.2. **Internal Forms**. Use solid expanded polystyrene conforming to ASTM C578 Type I for forming internal voids. The form material must be inert, non-biodegradable, non-absorptive, and strong enough to maintain sufficient rigidity to withstand the forces generated during concrete placement and consolidation without damage. Other materials for forming internal voids may be used when approved. Provide certification of conformance for void forms. The Engineer may require samples to be submitted when needed.

Anchor internal void forms to prevent movement or misalignment while placing concrete. Provide hold-down devices for all types of void forms at 30-in. maximum spacing unless otherwise approved. Do not use internal hold-down or lateral bracing devices that will remain in the finished member unless approved. Provide enough bearing area on the void form to prevent penetration of hold-down devices into the void form. Splice void form sections to prevent separation or misalignment during concrete placement and consolidation operations.

During casting, verify and document void form placement at 10-ft. maximum spacing using an approved method.

Vent void forms without solid cores to eliminate high air pressure caused by heat of hydration. Insert a 3/4-in. diameter plastic tube into the top of the void before placing concrete, and leave it in place until there is no possibility of damage from pressure. Remove the plastic tube afterwards and seal the hole with an approved repair material and procedure.

Drain prestressed concrete box beams and U-beams through the bottom flange by forming holes in each voided area as shown on the plans.

4.2.2. **Prestressing**. Perform pre-tensioning in accordance with this Item and post-tensioning in accordance with Item 426, "Post-Tensioning."

4.2.2.1. **Prestressing Equipment**. Furnish hydraulic jacks with sufficient capacity for prestressing the steel. Equip the jacks with instruments for monitoring the hydraulic pressure. Provide gauges at least 6 in. in diameter and with means to prevent the gauge pointer from fluctuating. Electronic pressure transducers with digital indicators may be used. Pressure gauges or electronic pressure indicators must indicate the load directly to 1% of the maximum gauge or sensor/indicator capacity or 2% of the maximum load applied, whichever is smaller.

Calibrate each jack and its gauge with the cylinder extension in the approximate position at final jacking force. Jacks and gauges for post-tensioning and single-strand pre-tensioning must be calibrated as a unit. Have certified calibration charts furnished by an independent laboratory and with each jack and gauge used on the project. Provide certified calibration of each ram before starting stressing operations on the project and:

- every 6 mo. thereafter for post-tensioning operations,
- every 12 mo. thereafter for pre-tensioning operations, and as requested by the Engineer.

The calibration frequency for multiple-strand pre-tensioning equipment may be extended to every 24 mo. thereafter if an approved master gauge system monitors it. The master gauge must check this equipment when suspect results occur and at least every 6 mo. Calibrate the master gauge per the manufacturer's recommendations and at least every 12 mo.

Recalibrate jacks and gauges when a malfunction occurs, when repairs such as replacing the seals, changing the length of the hydraulic lines, or changing the pump occur, or when using gauges that have not been calibrated with the jack. Extra compensation will not be allowed for the initial or subsequent calibrations.

Post-tensioning jacks must have provisions for measuring tendon elongation directly on the strand, bar, or wire. The jacks must be capable of slow release of force to properly seat the tendon anchors.

Single-strand stressing jacks for pre-tensioning must have provisions for measuring the elongation directly on the strand.

Multi-strand detensioning jacks must have sufficient capacity and throw to permit simultaneous release of the entire load in the strands. Use an approved single-strand flame-release procedure to release the remaining load if there is not enough throw in the multi-strand jacks to release all load in the strands.

4.2.2.2. **Pre-Tensioning**. Pre-tension all strands to a uniform initial load between 5% and 25% of the final load unless otherwise approved. Apply the load within a tolerance of:

- ±100 lb. per strand if the designated initial load is less than or equal to 10% of the final load, or
- ±200 lb. per strand if the designated initial load is greater than 10% of the final load.

Measure the initial load with a calibrated dynamometer or other suitable equipment.

Do not allow the modulus of elasticity of individual strands to vary more than 1% from each other when multiple-strand tensioned. Use a weighted average modulus of elasticity of strands to calculate elongation for multiple-strand tensioning operations.

Establish reference marks on the strand for measuring elongation after initial tensioning. Provide means for measuring the elongation of the strand to an accuracy of 1% of the theoretical elongation or 1/8 in., whichever is smaller. Establish independent references on the strand adjacent to each anchorage, to indicate slippage that may occur between the time of initial stressing and final release of the strands.

Do not allow the stress in the strand to exceed 80% of the specified ultimate tensile strength of the strand at any time.

Do not use any portion of the strand that has been previously gripped with chucks in the length of strand to be tensioned, except where gripped with chucks during initial tensioning. Do not drive over prestressing strand.

Strand chucks designed with spring caps must be used with the spring caps. Visually inspect strand chucks that are not equipped with spring caps to ensure all wedges are evenly seated after applying initial load. Correct unevenly seated wedges by releasing the stress, repositioning wedges, and reapplying the initial load.

Failure of individual wires in a 7-wire strand is acceptable if the total area of wire failure is not more than 2% of the total cross-sectional area of all strands in the member, and if no more than 1 wire fails in any single strand. Any setup with one or more broken wires must be examined by a licensed professional engineer or Quality Control Supervisor (as defined in DMS-7300, “Precast Concrete Fabrication Plants,”) to determine the cause before continuing stressing operations on the particular casting line.

4.2.2.2.1. **Strand Splicing**. Do not splice draped strands. One splice per straight strand will be permitted subject to the following:

- Locate splices outside the members.
- Splice strands with the lay or twist in the same direction to avoid unraveling.
- Splice all straight strands in a multiple-strand tensioning operation so an adjustment can be made for the average seating loss.
- Cut strand ends to be spliced with shears, abrasive saws, or grinders to remove regions where chucks were previously seated. Cut in the same manner at least 12 in. from strand ends to be spliced that were previously flame cut.

4.2.2.2.2. **Single and Multiple Straight Strand Tensioning**. After initial tensioning, apply the required load to the strands as shown on the plans by means of single-strand or multiple-strand hydraulic jacks equipped with calibrated gauges. Verify the final load in the strands by observing either the gauge pressure or elongation and independently checking the other. The final load and elongation must agree within 5% of the computed theoretical values. Additionally, the final load and elongation must agree algebraically with each other within 5%. Suspend tensioning operations until the problem has been identified and corrected in the event of discrepancies greater than these tolerances.

Verify uniform application of load to strands for multiple-strand-tensioning systems by measuring the movement on opposite sides of the anchorage.

4.2.2.2.3. **Draped Strand Tensioning**. Verify the intermediate load by observing either the gauge pressure or elongation and independently checking the other when draped strands are tensioned in a straight or partially-draped position before application of final load. The intermediate or final load, if strands are tensioned in the final position and elongation must agree within 5% of the computed theoretical values. Additionally, the intermediate or final load and elongation must agree algebraically with each other within 5%. Suspend tensioning operations until the problem has been identified and corrected in the event of discrepancies greater than these tolerances.

After application of final load, measurements on individual draped strands to establish differential stresses at selected points on the member will be averaged at a cross-section of the member, and the averages must be within 5% of the theoretical elongation. The measured elongation of any individual draped strand must not vary from the theoretical elongation by more than 10% at any measured cross-section. Suspend tensioning operations until the problem has been identified and corrected in the event of discrepancies greater than these tolerances.

Other methods to measure the intermediate load and final load in the draped strands may be submitted for approval.

4.2.2.2.4. **Strand Debonding**. Encase strands in plastic sheathing along the entire debonded length, and seal the ends with waterproof tape when shown on the plans. Use split plastic sheathing only if the seam is sufficiently sealed with waterproof tape to prohibit grout infiltration. Do not use sheathing that will permanently alter the physical or chemical properties of the surrounding concrete.

Full-length debonding of straight strands will be approved on an individual basis. Full-length debonding, when permitted, must be symmetrical about the vertical centerline of the beam and limited to 10% of the total number of straight strands or 6 straight strands, whichever is less. Do not debond draped strands full length. When using a concrete anchor block to combined strand patterns the same criteria applies.

4.2.2.3. **Combined Pre-Tensioning and Post-Tensioning**. When the plans call for a combination of pre-tensioning and post-tensioning, all of the requirements for pre-tensioning in this specification and for post-tensioning in Item 426, “Post-Tensioning,” apply.

4.2.3. **Placing Reinforcing Steel**. Place reinforcing steel in accordance with Item 440, “Reinforcement for Concrete.” Reinforcing steel projection outside of the member must not be more than 1/2 in. or less than 3/4 in. from plan dimension unless otherwise approved. Do not damage sheathing for strand debonding. Do not tie reinforcing steel to debonded strand regions.

Weld steel components in accordance with Item 448, “Structural Field Welding.” Provide welding procedure specifications (WPSs) for approval, and welding personnel certifications per the applicable AWS code.

4.2.4. **Quality of Concrete**. Provide concrete in accordance with Item 421, “Hydraulic Cement Concrete.” Use the class of concrete shown on the plans or in the pertinent Item for each type of structure or unit. Provide concrete meeting the approved mix design water-cement ratio. SCC is not allowed for project-specific fabrication plants unless approved by the Engineer. Mix concrete for a period of 1 min. for 1 cu. yd. and 15 sec. for each additional cu. yd. of rated capacity of the mixer. Count the mixing time from the time all materials are in the drum. Increase mixing time if necessary to achieve a uniform mix. Control concrete by

compressive strength tests of cylinders or other pertinent performance tests detailed on the plans or pertinent Items. Concrete compressive-strength test cylinders will be made, cured, and tested in accordance with Tex-704-I. Cure release-of-tension strength cylinders in accordance with Tex-715-I when match-cure technology is used.

High-strength concrete (f'_c > 9,000 psi) is accepted based on 56-day compressive strength testing. Concrete design-strength test cylinders for high-strength concrete will be made, cured, and tested in accordance with Tex-704-I.

Product with concrete that fails to meet minimum design compressive strength requirements will be reviewed. Concrete that has been determined to be structurally adequate may be accepted at an adjusted price based on the formula in Article 421.6., "Measurement and Payment." If the Engineer requires cores be taken to determine the strength of the in-situ concrete, the coring will be at the Contractor's expense and in accordance with Tex-424-A. All cores from precast members must meet 100% of the minimum design compressive strength requirements. For concrete that has been determined to be structurally adequate, coring of the in-situ concrete will not be allowed for the purpose of avoiding the price adjustment. The Department may require reimbursement for testing of cores. Testing by an approved commercial testing laboratory will be at the Contractor's expense. Test results from a commercial laboratory must be sealed by a licensed professional engineer.

SCC used for prestressed beams must have a Modulus of Elasticity of 5,000 ksi at 28 days. Test the concrete mix design before use in accordance with ASTM C469.

4.2.5. **Placing Concrete**. Place concrete only when its temperature at time of placement is between 50°F and 95°F.

Take responsibility for producing quality concrete under any weather condition and ensure adequate weather protection provisions are on-site and available for immediate use.

Provide immediate protective measures without compromising the quality of the product if rainfall occurs after concrete placing operations have started. Failure to immediately provide adequate weather protection may be cause for rejection of the affected product.

Maintain concrete transporting equipment clean and free from hardened concrete coatings.

At the time of concrete placement, reinforcing steel, strands, and embedments must be free of dirt, oil, or other bond-breaking substances.

Place and adequately consolidate concrete while all lifts are in a plastic state. Concrete must not exhibit segregation or excessive bleeding. Minimize concrete flow lines and displacement of the reinforcing steel, strands, embedments, and ducts during concrete placement. Concrete must not exhibit segregation or excessive bleeding.

Place concrete as near as possible to its final position in the forms except when using SCC. Do not deposit large quantities of concrete at one location and run or work it along the forms to other locations except for SCC. Place SCC in a manner to avoid segregation.

Do not allow fresh concrete to free-fall more than 8 ft. unless approved.

Work the coarse aggregate back from the face of the concrete, and force the concrete under and around the reinforcing steel, strands, embedments, and ducts. If prestressed concrete I-beams are cast in multiple lifts, the thickness of the first lift must be slightly above the juncture of the bottom flange and web.

Cast prestressed concrete box beams monolithically in 2 stages, maintaining the concrete in the previously placed bottom slab in a plastic state until the web (side wall) concrete is placed and vibrated into the bottom slab unless approved by the Engineer.

The maximum time between the addition of mixing water or cement to the concrete batch and the placing of concrete in the forms is 30 min. for concrete delivered in non-agitated delivery equipment and 60 min. for concrete delivered in agitated delivery equipment. If conditions of wind, humidity, and temperature cause quick stiffening of the concrete, the required placement times may be reduced and an approved retarder may be required, or increased if currently in use. Submit a plan for approval, if necessary, to demonstrate the concrete can be properly placed, consolidated, and finished without reducing placement time limits.

The maximum acceptable placement slump will be in accordance with Item 421, "Hydraulic Cement Concrete," unless otherwise specified. When the maximum acceptable placement slump or slumpflow is exceeded, the affected concrete will be rejected and retesting for slump or slumpflow will not be allowed regardless of the concrete placement times.

Additional requirements for precast mass placements will be in accordance with Item 420, "Concrete Substructures." In the case of a conflict between the 2 Items the more stringent requirements apply.

4.2.5.1. **Placing Concrete in Cold Weather**. Maintain concrete temperature between 50°F and 95°F at time of placement as specified in Section 424.4.2.5., "Placing Concrete," and maintain the concrete temperature of precast members at or above 50°F during the specified curing period as specified in Section 424.4.2.7., "Curing of Concrete." Do not place concrete when the atmospheric temperature in the shade is below 40°F and falling unless approved. Concrete may be placed when the atmospheric temperature in the shade is at least 35°F and rising or above 40°F, provided adequate cold-weather protection provisions are on-site and available for immediate use before placing concrete when weather conditions indicate a possible need for temperature protection. When required, provide necessary covering material or an approved accelerated curing system in accordance with Section 424.4.2.7.4., "Accelerated Curing," and do not allow any concrete to remain unprotected for longer than 1 hr. after placement. Do not place concrete in contact with any material coated with frost or with material at a temperature of 32°F or lower. Do not apply heat directly to concrete surfaces if accelerated curing is used. Take protective measures to ensure the difference between air temperature and concrete surface temperature does not cause thermal cracking.

Maintain aggregates free from ice, frost, and frozen lumps. Heat the aggregate and the water when needed to produce the minimum concrete placement temperature of 50°F, but:

- do not allow the water temperature to exceed 180°F or the aggregate temperature to exceed 150°F,
- heat the aggregate uniformly to eliminate overheated areas in the stockpile that might cause flash set of the cement, and
- provide an aggregate and water mixture temperature between 50°F and 85°F before introduction of the cement.

4.2.5.2. **Placing Concrete in Hot Weather**. Keep concrete at or below 95°F at time of placement in accordance with Section 424.4.2.5., "Placing Concrete." Use any of the following methods, as needed, to control the concrete placement temperature:

- Cool the aggregate by sprinkling or fogging (fine mist) with water, shading, or using an approved liquid nitrogen system and procedure.
- Cool the fresh concrete by using chilled mixing water, partially replacing mixing water with shaved or crushed ice, or using an approved system and procedure to discharge liquid nitrogen into concrete during batching.

Apply a fog spray (fine mist) of water to this steel just before placing concrete when the temperature of steel forms, strand, or reinforcing steel is greater than 120°F. Water droplets left on the form surfaces must not adversely affect surface finishes.

When field conditions are such that evaporation of water from the concrete makes the surface finishing operation difficult, a fog spray (fine mist) of water may be applied above the concrete surface. Do not fog directly toward the concrete or in any manner that will wash cement paste from the fresh concrete surface or cause water to puddle. Do not fog as a means to add finishing water and do not work moisture from the fog spray into the fresh concrete. An approved evaporation retardant conforming to DMS-4650, "Hydraulic

Cement Concrete Curing Materials and Evaporation Retardants," is also acceptable if used in accordance with the manufacturer's recommendations. Do not apply the evaporation retardant when floating and troweling concrete. Do not allow it to puddle or be worked into the concrete surface immediately after application. Misuse of fog spray or evaporation retardant will be cause for disallowing its use. Shade the concrete during casting if necessary.

Use an approved retarder, in accordance with the manufacturer's recommendations, when the air temperature is above 85°F if necessary to control concrete slump loss and lengthen the time for placing, consolidating, and finishing operations.

4.2.5.3. **Consolidation of Concrete**. Consolidate concrete thoroughly with high-frequency vibration immediately after placement. For prestressed concrete beams and piling, internal vibration is required and may be supplemented with external vibration.

Provide at least 1 on-site standby vibrator of the type being used for emergency use.

Perform concrete vibration using trained personnel and proper timing and spacing to ensure adequate consolidation. Revise the concrete placement and consolidation procedures, and review the concrete mix design and batching procedures, if necessary, when unacceptable defects such as excessive honeycombing, aggregate or mortar pockets or surface air voids (bugholes) are present. Provide supplemental vibrators or modify the vibration system when required to accomplish thorough consolidation of the concrete and complete embedment of the strands, reinforcing steel, embedments, or ducts. Avoid segregation or excessive bleeding of the concrete during vibration.

4.2.5.3.1. **Internal Vibration**. Insert vibrators into the concrete immediately after concrete placement at points spaced to ensure uniform vibration of the entire concrete mass. Limit the insertion spacing to within the radius where the vibrators are visibly effective. Allow the vibrators to sink into the concrete by their own weight and penetrate into previously placed lifts that are still in a plastic state to thoroughly consolidate the layers together and prevent cold joints. Withdraw the vibrators slowly to avoid forming holes after the concrete is thoroughly consolidated.

Do not allow prolonged contact of vibrators with forms so vibrator marks on concrete surfaces are minimal. Do not use vibrators to move concrete to other locations in the forms.

Use vibrators with nonmetallic vibrating heads to prevent damage to the epoxy coating when epoxy coated reinforcing steel is used. Increase the consolidation time and decrease the insertion spacing, if necessary, when using these vibrators.

4.2.5.3.2. **External Vibration**.

4.2.5.3.2.1. **Form Vibrators**. Form vibrators may be used to consolidate thin members, supplement internal vibration, or consolidate members with highly congested reinforcing steel.

Determine the size, number, and location of external vibrators to provide enough intensity of vibration to the desired area of the form. Adjust the spacing, frequency, amplitude, and duration of vibration according to the concrete mix and size of member to produce uniform consolidation of the concrete.

4.2.5.3.2.2. **Surface Vibrators**. Use vibratory screeds to consolidate thin sections. Move vibratory screeds at a rate that will bring enough mortar to the surface to embed and cover the coarse aggregate. Do not over vibrate by causing an excessive amount of mortar to be brought to the surface.

4.2.5.3.2.3. **Vibrating Tables**. Determine the size, number, and location of external vibrators to provide enough intensity of vibration to the desired area of the form. Adjust the spacing, frequency, amplitude, and duration of vibration according to the concrete mix and size of member to produce uniform consolidation of the concrete.

4.2.5.3.3. **Vibration of Self-Consolidating Concrete (SCC)**. Vibrate SCC only when approved by the Engineer. Provide an adequate amount of viscosity modifying admixture (VMA) in SCC mix when internal vibration is allowed by the Engineer.

4.2.6. **Finishing of Concrete**. Finished, unformed surfaces must not have distortions greater than 1/4 in. Screed or rough-float unformed surfaces of members, bringing enough mortar to the surface to embed and cover the coarse aggregate. Provide a uniform rough wood float finish to the surface of the member unless otherwise shown on the plans. Do not loosen aggregate when roughening the surface with a broom or when providing a tine finish.

Provide a smooth metal trowel finish for surfaces at anchor bolt locations.

4.2.7. **Curing of Concrete**. Cure concrete to promote early cement hydration by providing adequate moisture on exposed surfaces and by maintaining the concrete temperature or curing enclosure air temperature at the concrete surface within the limits specified in this Section. Provide uniform temperature and moisture on the surfaces to prevent differential shrinkage that may cause warping or cracking. Prevent temperature differentials within the concrete that cause thermal cracking.

Begin curing after the finishing operation, before the formation of plastic shrinkage cracks, and as soon as damage to the surface finish will not occur. Provide fog spray or an evaporation retardant after finishing and before curing if needed to prevent plastic shrinkage cracks. Apply fog spray or evaporation retardant in accordance with Section 424.4.2.5.2., "Placing Concrete in Hot Weather." Keep exposed concrete surfaces continuously wet for the duration of the specified curing period, unless an approved liquid membrane-forming curing compound is used. Membrane curing compound is only permitted as noted in this Section or in the pertinent Item.

Approved equipment and materials for curing must be on-site and available for immediate use before placing concrete. Provide temperature probes to monitor the concrete temperature or curing enclosure air temperature as specified in Table 2.

Table 2
Temperature Probe Requirements

Condition	Major Prestressed Members	Minor Prestressed Members	Nonstressed Members
Forecasted atmospheric temperature ≥ 50°F during specified curing period	2 concrete temperature probes per casting line to monitor high concrete temperature regions[5]	2 concrete temperature probes per casting line to monitor high concrete temperature regions[1,5]	N/A
Forecasted atmospheric temperature < 50°F during specified curing period	2 concrete temperature probes per casting line to monitor high concrete temperature regions,[5] and 2 concrete temperature probes per casting line to monitor low concrete temperature regions[2,5]	2 concrete temperature probes per casting line to monitor high concrete temperature regions,[1,5] and 2 concrete temperature probes per casting line to monitor low concrete temperature regions[2,5]	1 concrete temperature probe per 100 cubic yards of concrete or fraction thereof to monitor low concrete temperature regions[2]
Forecasted atmospheric temperature < 40°F during additional 3-day curing period[3]	N/A	1 concrete temperature probe per similar curing condition for prestressed piling only	N/A
When accelerated curing is used	2 temperature probes per casting line to monitor curing enclosure air temperature at concrete surfaces[4,5]	2 temperature probes per casting line to monitor curing enclosure air temperature at concrete surfaces[4,5]	1 temperature probe per 100 cubic yards of concrete or fraction thereof to monitor curing enclosure air temperature at concrete surfaces

1. Excluding prestressed bridge deck panels and prestressed retaining wall panels.
2. When accelerated curing is used, concrete temperature probes to monitor low concrete temperature regions are not required.
3. After attaining specified release-of-tension strength.
4. These probes are in addition to the concrete temperature probes required for monitoring high concrete temperature regions.
5. Place probes at the beginning and end of casting line.

Attach each temperature probe to a separate temperature recording device unless multi-channel temperature recording devices are used, in which case 1 high concrete temperature probe and 1 low concrete temperature probe may be attached to the same recording device. When accelerated curing is used, 1 curing enclosure air temperature probe may also be attached to this multi-channel temperature recording device.

Inadequate curing facilities or lack of attention to the proper curing of concrete will be cause for the Engineer to stop concrete placement until approved curing is provided. Inadequate curing may be cause for rejection of the affected product.

Forms may be removed at the discretion of the Contractor at any time after the concrete has reached sufficient strength to prevent physical damage to the member. Do not interrupt curing for more than 60 min. during form removal.

The following curing requirements apply for prestressed members:

- Cure concrete continuously, except as allowed during form removal, until the compressive strength of the concrete has reached the specified release-of-tension strength and until detensioning has been performed.
- Maintain concrete temperatures between 50°F and 150°F during the curing period. The maximum allowable concrete temperature may be increased to 170°F if the Contractor uses one of the concrete mix design options listed in Section 421.4.2.6., "Mix Design Options," other than options 6, 7, and 8. The Engineer may require lowering of the total cementitious content in the concrete mix design to the limits specified in Item 421, "Hydraulic Cement Concrete," for repeated violations of the maximum curing temperature.
- Membrane curing is permitted only for unformed surfaces of prestressed wall panels and interim curing on unformed surfaces of prestressed piling. Use Type 1-D or Type 2 curing compound conforming to DMS-4650, "Hydraulic Cement Concrete Curing Materials and Evaporation Retardants," for this application.
- Water cure prestressed piling an additional 3 days after attaining the specified release-of-tension strength. Do not interrupt curing for more than 4 hr. when moving piling to the storage area. Maintain the concrete temperature of piling at 50°F or above during this additional curing period.

The following curing requirements apply for nonstressed members:

- Cure concrete continuously, except as allowed during form removal, for 4 days or until the compressive strength of the concrete has reached the design strength.
- Maintain concrete temperatures between 50°F and 150°F during the curing period. The maximum allowable concrete temperature may be increased to 170°F if the Contractor uses one of the concrete mix design options listed in Section 421.4.2.6., "Mix Design Options," other than options 6, 7, and 8.
- Membrane curing is permitted on nonstressed members, except for surfaces to be painted or color-stained.

Cure members for an additional 24 hr. beginning immediately after the normal curing period if they are out of cure at any time other than during the allowable 60 min. for form removal or during the allowable 4 hr. for moving piling to storage.

Members failing to meet the concrete temperature requirements or curing enclosure air temperature requirements during curing will be reviewed. Repeated failure to maintain proper concrete temperatures may be cause for rejection of the affected product.

4.2.7.1. **Water Curing**. Water curing provides additional moisture to concrete and prevents moisture loss. Water used for curing must meet the requirements for concrete mixing and curing water specified in Section 421.2.5., "Water." Do not use seawater or water that stains or leaves an unsightly residue that cannot be removed. Monitor and maintain a temperature differential between curing water and concrete surface temperature that prevents thermal cracking.

4.2.7.1.1. **Wet Mat Method**. Use water-saturated cotton mats, burlap, burlap-polyethylene sheeting, or other approved moisture-retaining materials. Anchor the wet mats adequately to provide continuous contact with exposed concrete surfaces.

4.2.7.1.2. **Water Spray Method**. Use overlapping sprays, sprinklers, or soil-soaker hoses so concrete surfaces are kept continuously wet.

4.2.7.1.3. **Ponding Method**. Use an approved retarder when the air temperature is above 85°F in accordance with the manufacturer's recommendations if necessary to control concrete slump loss and lengthen the time for placing, consolidating, and finishing operations.

4.2.7.2. **Moisture Retention Curing**. Moisture retention curing prevents moisture loss from the concrete.

4.2.7.2.1. **Form Curing Method**. Concrete surfaces in direct contact with forms that are left in place will not require additional curing methods unless cold-weather protection is necessary.

4.2.7.2.2. **Impermeable Cover Method**. Cover exposed concrete surfaces with polyethylene sheeting, burlap-polyethylene sheeting, impervious paper, or other approved impermeable materials placed in close contact with concrete surfaces to keep them continuously wet. Provide additional moisture inside the enclosure in accordance with Section 424.4.2.7.1., "Water Curing," if this is not enough to keep exposed concrete surfaces continuously wet.

4.2.7.3. **Membrane Curing**. Liquid membrane-forming curing compound is a moisture retention covering that is applied as a liquid. It is only permitted as noted in Section 424.4.2.7., "Curing of Concrete."

Use Type 1-D or Type 2 membrane curing compound in accordance with DMS-4650, "Hydraulic Cement Concrete Curing Materials and Evaporation Retardants." Apply membrane curing compound with equipment and in a manner specified in Section 420.3.5., "Spraying Equipment," and Section 420.4.10.3., "Membrane Curing," respectively.

Do not contaminate reinforcing steel, embedments, or concrete surfaces that will later be in direct contact with cast-in-place concrete unless the curing compound can be completely removed to the satisfaction of the Engineer when applying membrane curing compound.

Use membrane curing compounds that do not appreciably stain the concrete.

4.2.7.4. **Accelerated Curing**. Accelerated curing is defined as curing with artificial heat provided to the curing enclosure or forms.

Test accelerated-curing facilities for a minimum of 48 hr. to demonstrate temperature variations do not exceed 20°F between any points in the curing enclosure. Submit accelerated curing facility drawings and test results, and obtain approval before using these facilities for Department work. The test may be performed on the entire casting line with either freshly cast concrete inside the forms or with empty forms. Provide 1 curing enclosure air temperature probe per 100 feet of casting line when accelerated curing facilities are being tested.

Maintain the air temperature in the curing enclosure between 50°F and 85°F until initial set of the concrete (as determined in accordance with Tex-440-A when establishing mix designs under representative temperature conditions) and for at least 3 hr. after concrete placement. The concrete temperature may then be raised uniformly at a maximum rate of 36°F per hour. Provide an unobstructed air space of at least 6 in. between surfaces of the concrete and the curing jacket.

Monitor and maintain the curing enclosure air temperature between 50°F and 160°F during accelerated curing for prestressed and nonstressed concrete members. Do not allow the air temperature to exceed 160°F for more than 1 cumulative hour during the entire curing period. Do not allow the air temperature to exceed 170°F at any time during the specified curing period. Arrange the location of the heat discharge into

the curing enclosure so temperature variations do not exceed 20°F between any points in the curing enclosure.

Provide curing enclosure air temperature probes to monitor the temperature at the concrete surface as specified in Table 2.

Provide enough moisture inside the curing enclosure to keep exposed concrete surfaces continuously wet for the specified curing period.

Provide other acceptable curing methods for the remaining curing period if accelerated curing is terminated before the specified curing period has elapsed.

4.2.7.4.1. **Steam Curing**. Steam cure in accordance with the requirements of accelerated curing. Position steam outlets so live steam is not applied directly on the concrete, forms, or test cylinders.

4.2.7.4.2. **Alternate Methods**. Other methods of accelerated curing, such as the use of radiant heaters or portable heater, may be permitted if they meet the requirements of accelerated curing. The use of any alternate method requires written approval.

4.2.8. **Detensioning**. Release the tension in the strands after concrete strength requirements are met using a sequence to minimize premature wire breakage or shock and damage to the concrete members. Release strands by multiple-strand detensioning or single-strand flame detensioning. Ensure strands are not released individually with single-strand jacks.

Flame-release each strand simultaneously at both ends of the casting bed, using a symmetrical sequence prepared by a licensed professional engineer if strands are released individually. Heat the strands over an approved strand length and duration when flame detensioning so that the metal slowly elongates and gradually loses strength. Do not abruptly flame-cut strand by holding the heat source in a concentrated location on the strand. Submit the flame-release procedures and sequences for approval. Approval of flame-release sequences does not relieve the Contractor from responsibility for meeting the product workmanship requirements of Section 424.4.3., "Workmanship."

Release the tension in the strand hold-down anchor slowly to minimize shock and damage to the concrete member when draped strands are used. Heat the anchor until the metal slowly elongates and gradually loses strength if heat is used to release the hold-down anchor. Provide positive external hold-downs to offset the vertical forces in the members when the sum of the hold-down forces is greater than half the weight of the member or for any amount of vertical force that has previously caused cracking. External hold-downs are to remain on each member until detensioning has been complete.

4.3. **Workmanship**. Formed surfaces must not have excessive surface honeycombing, aggregate or mortar pockets, air voids, lift lines, stains, or vibrator marks. Remove form-joint-offset marks in excess of the tolerances specified in Section 424.4.2.1.1., "External Forms," and fins and rough edges along chamfer lines, in a manner that will not damage the member. Repair fabrication holes, except box beam and U-beam drain holes, with an approved repair material and procedure.

Recess strands in accordance with the *Concrete Repair Manual* unless otherwise shown on the plans. Submit for approval any other moisture-barrier systems for protecting strands.

Before shipment of members, remove:

- concrete, paste, dirt, oil, or other bond-breaking substances from exposed reinforcing steel, and
- laitance, dirt, oil, or other bond-breaking substances from concrete surfaces to be in contact with cast-in-place concrete.

4.3.1. **Defects and Breakage**. Members that sustain damage or surface defects during fabrication, handling, storage, hauling, or erection are subject to review. Evaluate and repair members in accordance with the *Concrete Repair Manual*. Submit proposed deficiencies in accordance with the Department's NCR guidelines

and obtain approval before performing repairs. Repair work must reestablish the member's structural integrity, durability, and aesthetics to the satisfaction of the Engineer.

When deficiencies occur, determine the cause and take immediate corrective action. Failure to take corrective action, leading to similar repetitive deficiencies, could be cause for rejection of members.

Cracks that extend to the nearest reinforcement plane and fine surface cracks that do not extend to the nearest reinforcement plane, but are numerous or extensive, are subject to review.

Cracks in prestressed members that tend to close upon transfer of stress to the concrete are acceptable. Cracks that do not tend to close are subject to review.

Seal cracks in I-beam ends exceeding 0.005 in. in width as directed. The fabricator must decrease the spacing of Bars R and S in I-beam by providing additional bars to help limit crack width. No less than 1 in. clearance between bars will be permitted. The fabricator must take approved corrective actions if cracks greater than 0.005 in. form. All work, material, and engineering related to these cracks will be at the Contractor's expense.

Prestressed bridge deck panels will be rejected for any of the following conditions:

- any crack extending to the reinforcing plane and running parallel and within 1 in. of a strand for at least 1/3 of the embedded strand length; or
- any transverse or diagonal crack, including corner cracks and breaks, intersecting at least 2 adjacent strands and extending to the reinforcing plane.

Prestressed bridge deck panels that sustain damage, cracks not listed above, or surface defects during fabrication, handling, storage, hauling, or erection are subject to review.

4.3.2. **Tolerances**.

4.3.2.1. **Prestressed Members**. Allowable tolerances for the dimensions and configurations shown on the plans or approved shop drawings are shown in Table 3.

Variations greater than those specified in Table 3 are subject to review. However, these tolerances do not relieve the Contractor from the responsibility of furnishing a completed structure that is in reasonably close conformity with the lines, grades, cross-sections, dimensions, and details specified. Correct members not meeting these tolerances at no additional expense to the Department, to achieve a satisfactory completed structure. This also includes costs for correction due to variations in vertical beam camber. Correction may require replacement of the member.

Horizontal misalignment (sweep) in beams, which may increase at a later time and exceed the tolerance shown in Table 3, may be acceptable if the members can be hauled, erected, and aligned to within the allowable tolerance without being damaged. Store these members in a manner that will minimize the sweep.

Embedments must be firmly held in proper position to avoid movement during concrete placement. Place embedments in accordance with the manufacturer's recommendations. Place weld clip inserts for permanent metal deck forming no more than 1/16 in. from the beam edge.

Table 3
Allowable Tolerances for Prestressed Members

Dimension	I-beams	U-beams	Box and Slab Beams	Double-T Beams	Bridge Deck Panels	Piling	Wall Panels[1]
Length (perpendicular to strands for bridge deck panels)	±1"	±1"	±1"	±3/4"	±1/2"	−1"[2]	±3/16"
Width (parallel to strands for bridge deck panels)	+3/4" −1/4"	±1/4"	±1/4"	±1/2"	±1/2"	±1/4"	±3/16"
Nominal depth (thickness in case of panels)	+1/2" −1/4"	±1/4"	±1/4"	±1/4"	+1/4" −1/8"	±1/4"	±3/16"
Thickness: top slab or flange	+1/2" −1/4"	±1/2"	±1/2"	±1/4"	NA	NA	NA
Thickness: bottom slab or flange	+1/2" −1/4"	±1/2"	±1/2"	NA	NA	NA	NA
Thickness: web or wall	+3/4" −1/4"	±1/2"	±1/2"	±1/4"	NA	NA	NA
Horizontal alignment (deviation from straightness of all panel edges)	±1/8" per 10' of length	±1/8" per 10' of length, 3/4" Max	±1/4"	±1/4"	±1/8"	±1/8" per 10' of length	±1/8" per 10' of length, 1/2" Max
Deviation of ends (horizontal skew)	±1/2"	±1/2"	±1/2"	±1/2"	±1/2"	±1/8"	±1/4" per 5' of width, 1/2" Max
Deviation of ends (vertical batter)	±1/2"[8]	±1/2"[8]	±1/2"	±1/2"	NA	±1/8"	±1/4"
Notched end areas (for diaphragms): depth	±1/4"	NA	±1/4"	±1/4"	NA	NA	NA
Notched end areas (for diaphragms): length	+2" −1"	NA	+2" −1"	+2" −1"	NA	NA	NA
Bearing surfaces: perpendicular to vertical axis	±1/8"	NA	NA	±1/16"	NA	NA	NA
Bearing surfaces: deviation from plane	±1/16"	±1/8"	±1/8"	±1/16"	NA	NA	±1/16[3]
Anchor hole location: from end of member	+3/4" −1/4"	±1/4"	±1/4"	+3/4" −1/4"	NA	NA	NA
Anchor hole location: longitudinal spacing	±3/4"	±1/2"	±1/2"	±3/4"	NA	NA	NA
Anchor hole location: transverse location	±1/4"	±1/4"	±1/4"	±1/4"	NA	NA	NA
Diaphragm or lateral tie location	±1/2"	NA	±1/2"	±1/2"	NA	NA	NA
Position of internal void form (longitudinal for box beams and U-beams)	NA	±1"	±1"[4,5]	NA	NA	±1/2"	NA
Projection of reinforcing steel outside of member	+1/2" −3/4"	+1/2" −3/4"	+1/2" −3/4"	+1/2" −3/4"	+1/2" −3/4"	NA	+1/2" −3/4"
Position of strands: vertical	±1/4"[6]	±1/4"	±1/4"	±1/4"	±1/8"[7]	±1/4"	±1/8"
Position of strands: horizontal	±1/4"	±1/4"	±1/4"	±1/4"	±1/2"	±1/4"	±1/2"
Debonded length of strands	±3"	±3"	±3"	±3"	NA	NA	NA
Position of strand hold-down points	±6"	±6"	±6"	±6"	NA	NA	NA
Position of handling devices: parallel to length	±6"	±6"	±6"	±6"	As shown on the plans	±6"	±6"
Position of handling devices: transverse to length	±1"	±1"	±1"	±1"	As shown on the plans	±1"	±1"
Local flatness of formed surfaces (excluding bearing surface)	±1/4" in 10'	±1/4" in 10'	±1/4" in 10'	±1/4" in 10'	±1/4"	±1/4" in 10'	±1/4" in 10'
Bow (length and width)	NA	NA	NA	NA	NA	NA	±1/4" per 10'

1. Prestressed and nonstressed wall panels (tie back, C-wall, sound wall, etc.) except MSE wall panels.
2. Maximum length as approved.
3. Measured along the panel depth at the top and bottom panel sides.
4. Voided box beams only.
5. Length of box beam internal void form +1 in., −6 in.
6. For draped strands, the tolerance for vertical position of strands at the end of the beam may be increased to ±1/2 in. provided the tested concrete compressive strength, before release of tension into the member, is at least 5% greater than the release-of-tension strength shown on the plans.
7. Measured from bottom of panel.
8. 3/4 in. maximum for beams exceeding a height of 54 in.

4.3.2.2. **Nonstressed Members**. The allowable tolerances for nonstressed members are as specified in Table 4 unless otherwise shown on the plans. The allowable tolerances for nonstressed wall panels, except MSE wall panels, are as specified in Table 3.

Table 4
Allowable Tolerances for Nonstressed Members

Member	Dimension	Tolerance
MSE wall panels and wall components[1] (coping, posts, etc.)	All dimensions (including deviation from edge straightness)	±3/16 in.
	Deviation of ends (horizontal skew)	±1/4 in. in 5 ft., ±1/2 in. Max
	Local flatness of formed surfaces	±1/8 in. in 5 ft.
	Connection hardware	±1/2 in.

1. Includes wall components for tie-back walls, C-walls, sound walls, etc.

4.4. **Storage and Handling**. Mark members for identification immediately after form removal as shown on approved shop drawings in accordance with the requirements of the pertinent Items or as required. Do not change any identification markings or transfer material to other projects without approval from the Engineer. Inspect members immediately before shipping to the jobsite for damage that may have occurred in storage. Store and handle prestressed and nonstressed members in accordance with Item 425, "Precast Prestressed Concrete Structural Members."

5. MEASUREMENT AND PAYMENT

The work performed, materials furnished, equipment, labor, tools, and incidentals will not be measured or paid for directly but will be subsidiary to bid items of the Contract.

Item 427
Surface Finishes for Concrete

1. DESCRIPTION

Finish concrete surface as specified.

2. MATERIALS

Furnish materials in accordance with this Article for the type of surface finish specified.

2.1. **Coatings**.

2.1.1. **Adhesive Grout and Concrete Paint**. Provide coatings in accordance with DMS-8110, "Coatings for Concrete." Match color of coating with Federal Standard 595C color 35630, concrete gray, unless otherwise shown on the plans.

2.1.2. **Opaque Sealer**. Provide penetrating-type sealer in accordance with DMS-8110, "Coatings for Concrete." Match color of coating with Federal Standard 595C color 35630, concrete gray, unless otherwise shown on the plans.

2.1.3. **Silicone-Based Paint**. Provide silicone resin emulsion paint (SREP) meeting the requirements of DMS-8141, "Paint, Silicon Resin for Concrete." Match color of coating with Federal Standard 595C color 35630, concrete gray, unless otherwise shown on the plans.

2.2. **Exposed Aggregate Finish**. Provide approved aggregates meeting the grading requirements shown on the plans. Provide gravel consisting of predominantly rounded particles unless otherwise shown on the plans. Use crushed stone when a bush-hammered finish is desired. Provide a concrete surface retardant. Provide clear Type II permanent anti-graffiti coating in accordance with DMS-8111, "Anti-Graffiti Coatings."

3. EQUIPMENT

The Engineer may require demonstration of the equipment's capabilities.

3.1. **Low-Pressure Water Blasting**. Use equipment capable of supplying a minimum pressure at the nozzle end of 3,000 psi at a minimum flow rate of 3 gpm. Use a 0° rotary, vibratory, or wobble-type nozzle. Use equipment capable of including abrasives in the water stream when specified on the plans.

3.2. **Abrasive Blasting**. Use equipment with filters to produce oil-free air and also water-free air when dry air is required.

3.3. **Slurry Blasting**. Use equipment capable of combining air and abrasives with water to form a wet blast media capable of cleaning and preparing surface without creating dust.

3.4. **Spraying**. Use equipment with fluid and air pressure regulators and gauges to allow for adjustment to produce a uniform spray pattern for spray applications.

3.5. **Off-the-Form Finish Forms**. Use nonstaining, nonporous, high-quality forming materials (e.g., steel or medium-density and high-density overlaid plywood forms). Use steel or high-density overlaid plywood forms when the same form will be used more than twice.

3.6. **Form Liners**. Provide form liners capable of producing a patterned finish as shown on the plans. Use form liners that provide a clean release from the concrete surface without pulling or breaking the textured concrete.

4. CONSTRUCTION

Provide the finish specified on the plans for the specific surface areas.

4.1. **Surface Areas of Finish**. "Surface area of finish" designates the areas where the specified surface is to be applied.

4.1.1. **Surface Area I**.

- surfaces of railing;
- exterior vertical faces of fascia beams, slabs, slab spans, arches, and box girders;
- the outside bottom surface of fascia beams and girders;
- the underside of overhanging slabs to the point of juncture of the supporting beam;
- the entire underside of slab spans when shown on the plans;
- vertical and underside surfaces of bents and piers;
- all surfaces of tie beams, abutments, bridge wingwalls, culvert headwalls and wingwalls, and retaining walls exposed to view after all backfill and embankment is placed; and
- all other exposed surfaces shown on the plans to require surface treatment.

4.1.2. **Surface Area II**. Surfaces of railing, all wingwalls, and the exterior vertical faces of slabs.

4.1.3. **Surface Area III**. Only the top and roadway faces of all concrete railing and bridge wingwalls.

4.1.4. **Surface Area IV**. Areas designated on the plans.

4.2. **Coatings**. Apply the coating specified on the plans.

4.2.1. **Preparation**. Clean the surface thoroughly before applying a coating by chemical cleaning, if required, and by blast cleaning.

Submit a containment plan that details the procedures proposed to keep public property, private property, and the environment from being adversely affected by the cleaning and painting operations. Do not discharge washwater into body of water or conveyance without TCEQ approval. Collect and properly dispose of any paint or debris dislodged as a result of cleaning operations.

4.2.1.1. **Chemical Cleaning**. Clean surfaces contaminated with oil, grease, or other contaminants by scrubbing the area with an approved detergent or other concrete cleaning material before blast cleaning. Do not use a solvent that will stain the surface or inhibit coating adhesion. Perform the following test to check for surface contamination of oil type materials:

- Spray the surface with a fine mist of potable water.
- Examine the area to see if water beads up.
- Clean the surface if beading is found.

4.2.1.2. **Blast Cleaning**. Blast clean the designated surface to remove weak surface material, curing compound, and other contaminants before applying a specified coating, leaving a lightly etched uniformly textured surface. Use an approved abrasive propelled by oil-free air with or without the addition of potable water, or blast with potable water with or without the addition of an approved abrasive at sufficient pressure to effectively clean and prepare the surface. Maintain the stand-off-distance of the nozzle to a maximum of 12 in. from the surface being cleaned when water blasting.

Do not damage concrete surface by gouging, spalling, or exposing coarse aggregate by the blasting operation.

Blow clean oil- and moisture-free air on all surfaces with sufficient pressure to remove loose particles immediately before application of any coating. Perform the following test to check for surface cleanliness as directed:

- Press a 10 in. long strip of 2 in. wide clear packing tape on the surface by rubbing with moderate pressure.
- Grasp the free end of the tape, and remove the tape from the surface with a sharp jerk.
- Examine the surface of the tape for clinging particles.

Continue cleaning the concrete surface until there are no particles clinging to the tape surface for subsequent tests. An additional test that can be used to check the surface for dust is to wipe the surface with a dark cloth and then examine the cloth for discoloration.

4.2.2. **Application**. Mix coating materials thoroughly with a mechanical mixer at a speed that causes the mixture to rotate entirely in the container. Ensure complete mixing by probing the container with a stirring device searching for non-dispersed or settled material.

Apply coatings once the new concrete has aged a minimum of 28 days except for the adhesive grout coating. Do not apply coatings when weather conditions will be detrimental to the final surface finish as determined by the Engineer. Do not apply coatings when surface temperature of the concrete exceeds 110°F.

Apply coatings to obtain a consistent color and texture.

4.2.2.1. **Adhesive Grout**. Apply coating on a moistened surface to a uniform minimum thickness of 1/16 in. Apply when ambient temperature is at least 50°F.

4.2.2.2. **Concrete Paint**. Apply the coating on a dry surface in 2 coats for a total maximum application rate of 150 sq. ft. per gallon. Match the color of the applied coating with the color standard shown on the plans. Do not thin material unless approved. Apply when ambient temperature is between 50°F and 100°F.

4.2.2.3. **Opaque Sealer**. Apply the coating to a dry surface in 2 coats for a total maximum application rate of 200 sq. ft. per gallon. Match the color of the applied coating with the approved color standard shown on the plans. Do not thin the material unless approved. Apply when ambient temperature is between 40°F and 100°F.

4.2.2.4. **Silicone Resin Paint**. Apply the coating on a dry surface in 2 coats at a rate not exceeding 300 sq. ft. per gallon per coat. Do not thin the material unless approved. Wait a minimum of 12 hr. between coats. Apply when ambient temperature is between 50°F and 100°F.

Repair surface finish where coating has been applied that exhibits peeling, flaking, or discoloration or has been damaged during construction. Remove defective or damaged coating. Clean and recoat repair area in accordance with the requirements of this Item.

4.3. **Special Surface Finishes**. Submit a work plan to the Engineer for any special finish shown on the plans. Include in the work plan the type of aggregates, materials, variation of panel or pattern arrangement, dimensions, construction methods, and other features affecting the work as is necessary for the “Special Surface Finish” specified.

4.3.1. **Blast Finish**. Provide surface profile as shown on the plans, or meet the minimum requirements of Section 427.4.2.1., “Preparation.” Construct a 4 × 4 ft. sample panel using the same concrete used in construction of the member to receive the blast finish. Prepare the surface of the sample panel to meet the specified finish, and obtain approval of the sample finish. Use the approved sample panel finish as the standard for surfaces requiring a blast finish.

4.3.2. **Slurry Coat Finish**. Provide cementitious slurry coat finish to concrete surfaces within 14 days of placing concrete or later as approved. Water blast surface to moisten surface before application when application of slurry coat occurs more than 14 days after placing concrete. Do not apply slurry coat finish to surfaces receiving another type coating finish.

Submit for approval proposed slurry recipe including cement, latex concrete additive, with or without sand, and other additives before application. The Engineer will direct the level of surface texture the slurry coat will have, whether to include sand, and what fineness of sand is to be used. Tint mixture of slurry as specified on the plans and as directed. Maintain consistent slurry throughout project only modifying recipe to account for color variations being noticed as work progresses.

Rub in slurry with carborundum stone, stiff bristle brush, or other approved device. Limit thickness of applied slurry to a maximum of 1/16 in. thick. Demonstrate application methods for slurry coat and obtain approval of proposed surface. Apply slurry coat to obtain a tightly adhering cementitious finish to concrete surface. Remove material and reapply if slurry coat is not tightly adhering or is cracked.

4.3.3. **Rub Finish**. Provide a finish to the surface by rubbing the surface with a carborundum stone or other approved material. Begin rubbing the surface immediately after forms have been removed. Provide blast finish or other finish as directed at no additional cost to the Department if rubbing surface is delayed to the point where the surface is dry and unable to be rubbed to produce an acceptable finish. Perform the requirements to obtain the ordinary surface finish specified in Section 420.4.13., "Ordinary Surface Finish," concurrently with rubbing the surface. Rub concrete-patching areas after the patch material has thoroughly set and blend the patch in with the surrounding area to produce a surface with uniform color and texture where concrete patching is performed.

Keep the surface continuously wet after form removal until the rubbing is complete. Rub the surface sufficiently to bring the wetted concrete surface to a paste producing a smooth dense surface without pits, form marks, or other irregularities. Do not use cement grout to form the paste on the surface. Stripe the surface with a brush to conceal the rubbing pattern and allow the paste to reset. Wash the concrete with potable water after the paste has sufficiently set to leave it with a neat and uniform appearance and texture. Apply membrane curing, if required, in accordance with Item 420, "Concrete Substructures," after rubbing is complete.

4.3.4. **Off-the-Form Finish**. Provide a finish with minimal surface defects and uniform color and texture by using non-staining, non-porous, high-quality forming materials. Use the same type of forming materials for like elements for the entire structure.

Use mortar-tight forms to prevent leakage and discoloration. Seal joints with compressible gasket material, caulk, tape, or by other suitable means that are not detrimental to the concrete finish if necessary. Use one brand and type of form-release agents for all surfaces unless another product produces a similar concrete surface appearance. Do not use barrier-type (wax, fuel oil, carrier oil, etc.) release agents. Use form-release agents containing a rust inhibitor on steel forms. Clean rust off steel forms before use. Use plywood that will not cause discoloration of the concrete surface.

Direct special attention to consolidation and vibration of the concrete around the form surfaces to minimize bug holes. Modify concrete placement and vibration techniques if surface contains an excessive amount of bug holes. Remove all forms without interruption once form removal begins to prevent discoloration due to differing form curing times.

Do not use membrane curing on surfaces with off-the-form finish.

Repair honeycombed and spall areas with least dimension larger than 2 in. in accordance with the concrete surface repair procedures outlined in Item 420, "Concrete Substructures," to obtain an ordinary surface finish as defined in Section 420.4.13., "Ordinary Surface Finish." Patch honeycombed and spall areas with least dimension greater than 3/4 in. but smaller than 2 in. by filling defect with repair material omitting the chipping operation. Do not patch honeycombed and spall areas with least dimension smaller than 3/4 in. Perform required repairs as soon as forms are removed. Match repair material color and texture with surrounding

concrete surfaces. Minimize the area of repair by not smearing the repair material over acceptable concrete surfaces in an attempt to blend the repair with the surrounding concrete. Cut out form ties at least 1/2 in. below the surface, and patch accordingly. Perform repair work as soon as possible after removing forms so that concrete and repair material have similar ages. Replace or refurbish the forms when the Engineer determines defective formwork is causing an excessive amount of repair work.

4.3.5. **Form Liner Finish**. Provide patterned finish as shown on the plans. Do not splice form liner panels in a way that causes a noticeable transition or line between pieces. Wash and clean form liners after each use when the forms can be reused. Replace form liners that have become damaged or worn.

Construct a sample panel for each form liner finish. Approval is required to verify the sample panel meets the requirements of the plans and specifications before beginning work. Upon approval, the sample panel becomes the model panel that all other work will be compared against. Deviation in color, grade, or depth from the model panel is grounds for rejection of the form liner finish. Removal of defective work may be necessary as determined by the Engineer and in accordance with the surface finish requirements outlined in Item 420, "Concrete Substructures," to obtain an ordinary surface finish as defined in Section 420.4.13., "Ordinary Surface Finish."

Seal all form liner joints in a manner acceptable to the Engineer to prevent leakage at the surface.

4.3.6. **Exposed Aggregate Finish**. Provide exposed aggregate finish as indicated on the plans. Provide a depth of finish between 3/8 in. and 1/2 in. unless directed otherwise.

Apply a concrete surface retarder that penetrates approximately 1/4 in. into the forms or concrete surface to help achieve the desired finish. Apply 2 or 3 coats to wood forms to account for absorption if necessary. Tape or caulk form joints to prevent escape of the retarder during the placing operations. Protect the form surfaces from sun and rain while exposed to the atmosphere. Re-treat form surfaces with retarder if disturbed. Protect adjacent areas of concrete not requiring exposed aggregate finish from the retarder.

Remove forms 12 to 15 hr. after concrete placement but not before concrete has gained sufficient strength to support the self-weight of the member unless directed otherwise. Expose the aggregate for the finish immediately after form removal. Remove the grout paste covering the aggregate to be exposed by an approved method. Do not loosen the aggregate by the grout removal operation. Maintain required curing on all surfaces except for the time while the aggregate is being exposed. Cure using wet mats or membrane after the aggregate is exposed.

Repair defective areas as determined by the Engineer.

Re-clean exposed aggregate surfaces by an approved method. Apply a coat of clear Type II permanent anti-graffiti coating to cleaned exposed aggregate surface. Apply anti-graffiti coatings by spray, roller, or brush at the application rates recommended by the manufacturer and in accordance with Item 740, "Graffiti Removal and Anti-Graffiti Coating."

5. MEASUREMENT

When surface finishes for concrete is shown on the plans to be a pay item, measurement will be by the square foot of the type of surface finish specified.

This is a plans quantity measurement Item. The quantity to be paid is the quantity shown in the proposal, unless modified by Article 9.2., "Plans Quantity Measurement." Additional measurement or calculations will be made if adjustments of quantities are required.

6. PAYMENT

Unless otherwise specified on the plans, the work performed, materials furnished, equipment, labor, tools, and incidentals will not be paid for directly but will be considered subsidiary to pertinent Items.

When a surface finish for concrete is specified as a pay item, the work performed and materials furnished in accordance with this Item and measured as provided under “Measurement” will be paid for at the unit price bid for “Adhesive Grout Finish,” “Concrete Paint Finish,” “Opaque Sealer Finish,” “Silicone Resin Paint Finish,” or “Blast Finish.” This price is full compensation for materials; cleaning and preparing surfaces; application of materials; and equipment, labor, tools, and incidentals.

Slurry coat, rub, off-the-form, form liner, or exposed aggregate finishes (including anti-graffiti coating) will not be paid for under this Item but are subsidiary to other pertinent Items.

Item 440
Reinforcement for Concrete

1. DESCRIPTION

Furnish and place reinforcement of the type, size, and details shown on the plans.

2. MATERIALS

Use deformed steel bar reinforcement unless otherwise specified or allowed.

2.1. **Approved Mills**. Before furnishing steel, producing mills of reinforcing steel for the Department must be pre-approved in accordance with DMS-7320, "Qualification Procedure for Reinforcing Steel Producing Mills," by the Construction Division. The Department's MPL has a list of approved producing mills. Reinforcing steel obtained from unapproved sources will not be accepted.

Contact the Construction Division with the name and location of the producing mill for stainless reinforcing steel, low carbon/chromium reinforcing steel, or dual-coated reinforcing steel at least 4 weeks before ordering any material.

2.2. **Deformed Steel Bar Reinforcement**. Provide deformed reinforcing steel conforming to one of the following:

- ASTM A615, Grades 60, 75, or 80;
- ASTM A996, Type A, Grade 60;
- ASTM A996, Type R, Grade 60, permitted in concrete pavement only (Furnish ASTM A996, Type R bars as straight bars only and do not bend them. Bend tests are not required.); or
- ASTM A706, Grades 60 or 80.

Provide the grade of reinforcing steel shown on the plans. Provide Grade 60 if no grade is shown.

The nominal size, area, and weight of reinforcing steel bars this Item covers are shown in Table 1.

Table 1
Size, Area, and Weight of Reinforcing Steel Bars

Bar Size Number (in.)	Diameter (in.)	Area (sq. in.)	Weight per Foot (lbs.)
3	0.375	0.11	0.376
4	0.500	0.20	0.668
5	0.625	0.31	1.043
6	0.750	0.44	1.502
7	0.875	0.60	2.044
8	1.000	0.79	2.670
9	1.128	1.00	3.400
10	1.270	1.27	4.303
11	1.410	1.56	5.313
14	1.693	2.25	7.650
18	2.257	4.00	13.60

2.3. **Smooth Steel Bar Reinforcement**. Provide smooth bars for concrete pavement with a yield strength of at least 60 ksi and meeting ASTM A615. Provide steel conforming to ASTM A615 or meet the physical requirements of ASTM A36 for smooth bars that are larger than No. 3. Designate smooth bars by size number up to No. 4 and by diameter in inches above No. 4.

2.4. **Spiral Reinforcement**. Provide bars or wire for spiral reinforcement of the grade and minimum size or gauge shown on the plans.

Provide smooth or deformed wire conforming to ASTM A1064. Provide bars conforming to ASTM A615; ASTM A996, Type A; or ASTM A675, Grade 80, meeting dimensional requirements of ASTM A615.

2.5. **Weldable Reinforcing Steel**. Provide reinforcing steel conforming to ASTM A706 or with a maximum carbon equivalent (C.E.) of 0.55% if welding of reinforcing steel is required or desired. Provide a report showing the percentages of elements necessary to establish C.E. for reinforcing steel that does not meet ASTM A706, in order to be structurally welded. These requirements do not pertain to miscellaneous welds on reinforcing steel as defined in Section 448.4.2.1.1., "Miscellaneous Welding Applications."

Calculate C.E. using the following formula:

$$C.E. = \%C + \frac{\%Mn}{6} + \frac{\%Cu}{40} + \frac{\%Ni}{20} + \frac{\%Cr}{10} - \frac{\%Mo}{50} - \frac{\%V}{10}$$

Do not weld stainless reinforcing steel without permission from the Engineer. Provide stainless reinforcing steel suitable for welding, if required, and submit welding procedures and electrodes to the Engineer for approval.

2.6. **Welded Wire Reinforcement**. Provide welded wire reinforcement (WWR) conforming to ASTM A1064. Observe the relations shown in Table 2 among size number, diameter in inches, and area when ordering wire by size numbers, unless otherwise specified. Precede the size number for deformed wire with "D" and for smooth wire with "W."

Designate WWR as shown in the following example: 6 × 12 – W16 × W8 (indicating 6-in. longitudinal wire spacing and 12-in. transverse wire spacing with smooth No. 16 wire longitudinally and smooth No. 8 wire transversely).

Table 2
Wire Size Number, Diameter, and Area

Size Number (in.)	Diameter (in.)	Area (sq. in.)
31	0.628	0.310
30	0.618	0.300
28	0.597	0.280
26	0.575	0.260
24	0.553	0.240
22	0.529	0.220
20	0.505	0.200
18	0.479	0.180
16	0.451	0.160
14	0.422	0.140
12	0.391	0.120
10	0.357	0.100
8	0.319	0.080
7	0.299	0.070
6	0.276	0.060
5.5	0.265	0.055
5	0.252	0.050
4.5	0.239	0.045
4	0.226	0.040
3.5	0.211	0.035
2.9	0.192	0.035
2.5	0.178	0.025
2	0.160	0.020
1.4	0.134	0.014
1.2	0.124	0.012
0.5	0.080	0.005

Note—Size numbers (in.) are the nominal cross-sectional area of the wire in hundredths of a square inch. Fractional sizes between the sizes listed above are also available and acceptable for use.

2.7. **Epoxy Coating**. Provide epoxy coated reinforcing steel as shown on the plans. Before furnishing epoxy coated reinforcing steel, an epoxy applicator must be pre-approved in accordance with DMS-7330, "Qualification Procedure for Reinforcing Steel Epoxy Coating Applicators." The Department's MPL has a list of approved applicators.

Furnish coated reinforcing steel meeting the requirements in Table 3.

Table 3
Epoxy Coating Requirements for Reinforcing Steel

Material	Specification
Bar	ASTM A775 or A934
Wire or WWR	ASTM A884 Class A or B
Mechanical couplers	As shown on the plans
Hardware	As shown on the plans

Use epoxy coating material and coating repair material that complies with DMS-8130, "Epoxy Powder Coating for Reinforcing Steel." Patch no more than 1/4-in. total length in any foot at the applicator's plant.

Maintain identification of all reinforcing steel throughout the coating and fabrication process and until delivery to the project site.

Furnish 1 copy of a written certification verifying the coated reinforcing steel meets the requirements of this Item and 1 copy of the manufacturer's control tests.

2.8. **Mechanical Couplers**. Use couplers of the type specified in DMS-4510, "Mechanical Couplers for Reinforcing Steel," Article 4510.5.A, "General Requirements," when mechanical splices in reinforcing steel bars are shown on the plans.

Furnish only couplers pre-qualified in accordance with DMS-4510, "Mechanical Couplers for Reinforcing Steel." Ensure sleeve-wedge type couplers are not used on coated reinforcing. Sample and test couplers for use on individual projects in accordance with DMS-4510, "Mechanical Couplers for Reinforcing Steel." Furnish couplers only at locations shown on the plans.

Furnish couplers for stainless reinforcing steel with the same alloy designation as the reinforcing steel.

2.9. **Fibers**. Supply fibers conforming to DMS-4550 "Fibers for Concrete" at the minimum dosage listed in the Department's MPL, when allowed by the plans. Use non-metallic fibers when shown on the plans.

2.10. **Stainless Reinforcing Steel**. Provide deformed steel bars of the types listed in Table 4 and conforming to ASTM A955, Grade 60 or higher when stainless reinforcing steel is required on the plans.

Table 4
Acceptable Types of Deformed Stainless Steel Bar

UNS Designation	S31653	S31803	S24100	S32304
AISI Type	316LN	2205	XM-28	2304

2.11. **Low Carbon/Chromium Reinforcing Steel**. Provide deformed steel bars conforming to ASTM A1035, Grade 100 when low carbon/chromium reinforcing steel is required on the plans.

2.12. **Dual-Coated Reinforcing Steel**. Provide deformed bars conforming to ASTM A1055, Grade 60 or higher when dual-coated reinforcing steel is required on the plans.

2.13. **Glass Fiber Reinforced Polymer Bars (GFRP)**. Provide bars conforming to the AASHTO LRFD *Bridge Design Guide Specifications for GFRP-Reinforced Concrete Bridge Decks and Traffic Railings*, Section 4, "Material Specifications" when GFRP bars are required on the plans. Provide sample certification demonstrating the GFRP bar supplier has produced bar that meets the Material Specifications 2 mo. before fabrication. Furnish certification upon shipment that the GFRP bar supplied meets the Material Specifications.

3. CONSTRUCTION

3.1. **Bending**. Fabricate reinforcing steel bars as prescribed in the CRSI *Manual of Standard Practice* to the shapes and dimensions shown on the plans. Fabricate in the shop if possible. Field-fabricate, if permitted, using a method approved by the Engineer. Replace improperly fabricated, damaged, or broken bars at no additional expense to the Department. Repair damaged or broken bars embedded in a previous concrete placement using a method approved by the Engineer.

Unless otherwise shown on the plans, the inside diameter of bar bends, in terms of the nominal bar diameter (d), must be as shown in Table 5.

Table 5
Minimum Inside Diameter of Bar Bends

Bend	Bar Size Number (in.)	Pin Diameter
Bends of 90° and greater in stirrups, ties, and other secondary bars that enclose another bar in the bend	3, 4, 5	4d
	6, 7, 8	6d
Bends in main bars and in secondary bars not covered above	3 through 8	6d
	9, 10, 11	8d
	14, 18	10d

Bend-test representative specimens as described for smaller bars in the applicable ASTM specification where bending No. 14 or No. 18 Grade 60 bars is required. Make the required 90° bend around a pin with a diameter of 10 times the nominal diameter of the bar.

Bend stainless reinforcing steel in accordance with ASTM A955.

3.2. **Tolerances**. Fabrication tolerances for bars are shown in Figure 1.

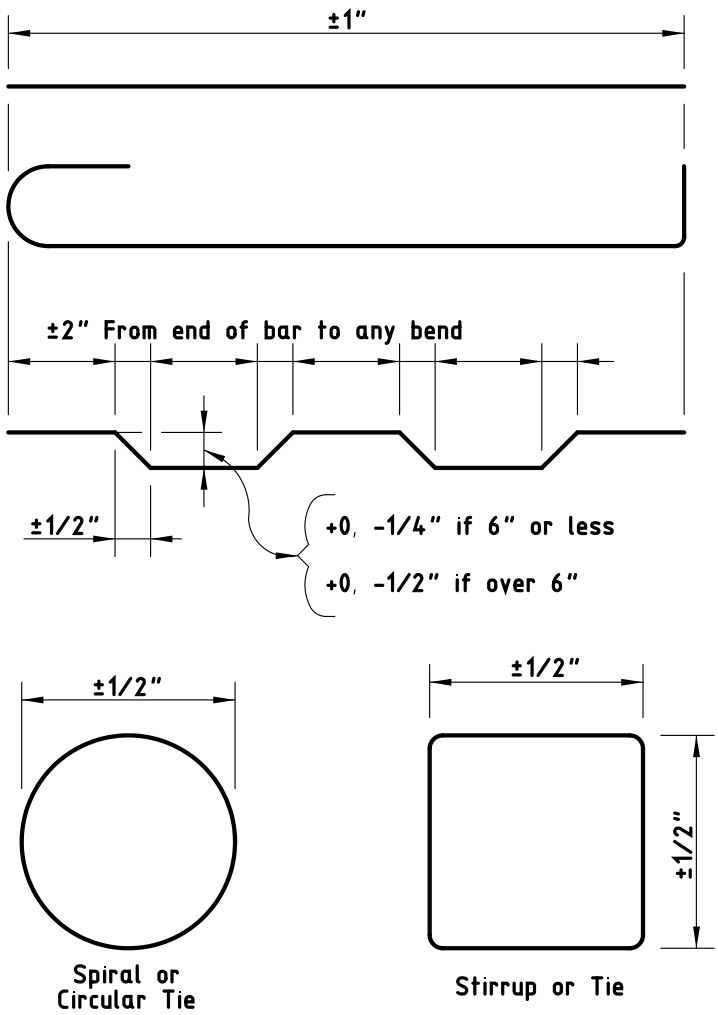

Figure 1
Fabrication Tolerances for Bars

3.3. **Storage**. Store reinforcement above the ground on platforms, skids, or other supports, and protect it from damage and deterioration. Ensure reinforcement is free from dirt, paint, grease, oil, and other foreign materials when it is placed in the work. Use reinforcement free from defects such as cracks and delaminations. Rust, surface seams, surface irregularities, or mill scale will not be cause for rejection if the minimum cross-sectional area of a hand wire-brushed specimen meets the requirements for the size of steel specified.

Do not allow stainless reinforcing steel to be in direct contact with uncoated reinforcing steel, nor with galvanized reinforcing steel. This does not apply to stainless steel wires and ties. Store stainless reinforcing steel separately, off the ground on wooden supports.

3.4. **Splices**. Lap-splice, weld-splice, or mechanically splice bars as shown on the plans. Additional splices not shown on the plans will require approval. Splices not shown on the plans will be permitted in slabs no more than 15 in. in thickness, columns, walls, and parapets.

- Do not splice bars less than 30 ft. in plan length unless otherwise approved. For bars exceeding 30 ft. in plan length, the distance center-to-center of splices must be at least 30 ft. minus 1 splice length, with no more than 1 individual bar length less than 10 ft. Make lap splices not shown on the plans, but otherwise

permitted, in accordance with Table 6. Maintain the specified concrete cover and spacing at splices, and place the lap-spliced bars in contact, securely tied together.

Table 6
Minimum Lap Requirements for Steel Bar Sizes through No. 11

Bar Size Number (in.)	Uncoated Lap Length	Coated Lap Length
3	1 ft. 4 in.	2 ft. 0 in.
4	1 ft. 9 in.	2 ft. 8 in.
5	2 ft. 2 in.	3 ft. 3 in.
6	2 ft. 7 in.	3 ft. 11 in.
7	3 ft. 5 in.	5 ft. 2 in.
8	4 ft. 6 in.	6 ft. 9 in.
9	5 ft. 8 in.	8 ft. 6 in.
10	7 ft. 3 in.	10 ft. 11 in.
11	8 ft. 11 in.	13 ft. 5 in.

- Do not lap No. 14 or No. 18 bars.
- Lap spiral steel at least 1 turn.
- Splice WWR using a lap length that includes the overlap of at least 2 cross wires plus 2 in. on each sheet or roll. Splices using bars that develop equivalent strength and are lapped in accordance with Table 6 are permitted.
- Lap the existing longitudinal bars with the new bars as shown in Table 6 for box culvert extensions with less than 1 ft. of fill. Lap at least 1 ft. 0 in. for extensions with more than 1 ft. of fill.
- Ensure welded splices conform to the requirements of the plans and of Item 448, "Structural Field Welding." Field-prepare ends of reinforcing bars if they will be butt-welded. Delivered bars must be long enough to permit weld preparation.
- Install mechanical coupling devices in accordance with the manufacturer's recommendations at locations shown on the plans. Protect threaded male or female connections, and ensure the threaded connections are clean when making the connection. Do not repair damaged threads.
- Mechanical coupler alternate equivalent strength arrangements, to be accomplished by substituting larger bar sizes or more bars, will be considered if approved in writing before fabrication of the systems.

3.5. **Placing**. Place reinforcement as near as possible to the position shown on the plans. Do not vary bars from plan placement by more than 1/12 of the spacing between bars in the plane of the bar parallel to the nearest surface of concrete. Do not vary bars from plan placement by more than 1/4 in in the plane of the bar perpendicular to the nearest surface of concrete. Provide a minimum 1-in. clear cover of concrete to the nearest surface of bar unless otherwise shown on the plans.

For bridge slabs, the clear cover tolerance for the top mat of reinforcement is −0, +1/2 in.

Locate the reinforcement accurately in the forms, and hold it firmly in place before and during concrete placement by means of bar supports that are adequate in strength and number to prevent displacement and keep the reinforcement at the proper distance from the forms. Provide bar supports in accordance with the CRSI *Manual of Standard Practice*. Use Class 1 supports, approved plastic bar supports, precast mortar, or concrete blocks when supports are in contact with removable or stay-in-place forms. Use Class 3 supports in slab overlays on concrete panels or on existing concrete slabs. Bar supports in contact with soil or subgrade must be approved.

Use Class 1A supports with epoxy coated reinforcing steel. Provide epoxy or plastic coated tie wires and clips for use with epoxy coated reinforcing steel.

Use mortar or concrete with a minimum compressive strength of 5,000 psi for precast bar supports. Provide a suitable tie wire in each block for anchoring to the bar.

Place individual bar supports in rows at 4-ft. maximum spacing in each direction. Place continuous type bar supports at 4-ft. maximum spacing. Use continuous bar supports with permanent metal deck forms.

The exposure of the ends of longitudinals, stirrups, and spacers used to position the reinforcement in concrete pipe and storm drains is not cause for rejection.

Tie reinforcement for bridge slabs and top slabs of direct traffic culverts at all intersections, except tie only alternate intersections where spacing is less than 1 ft. in each direction. Tie the bars at enough intersections to provide a rigid cage of reinforcement for reinforcement cages for other structural members. Fasten mats of WWR securely at the ends and edges.

Clean mortar, mud, dirt, debris, oil, and other foreign material from the reinforcement before concrete placement. Do not place concrete until authorized.

Stop placement until corrective measures are taken if reinforcement is not adequately supported or tied to resist settlement, reinforcement is floating upward, truss bars are overturning, or movement is detected in any direction during concrete placement.

3.6. **Handling, Placing, and Repairing Epoxy Coated Reinforcing Steel**.

3.6.1. **Handling**. Provide systems for handling coated reinforcing steel with padded contact areas. Pad bundling bands or use suitable banding to prevent damage to the coating. Lift bundles of coated reinforcement with a strongback, spreader bar, multiple supports, or a platform bridge. Transport the bundled reinforcement carefully, and store it on protective cribbing. Do not drop or drag the coated reinforcement.

3.6.2. **Placing**. Do not flame-cut coated reinforcement. Saw or shear-cut only when approved. Coat cut ends as specified in Section 440.3.6.3., “Repairing Coating.”

Do not weld or mechanically couple coated reinforcing steel except where specifically shown on the plans. Remove the epoxy coating at least 6 in. beyond the weld limits before welding and 2 in. beyond the limits of the coupler before assembly. Clean the steel of oil, grease, moisture, dirt, welding contamination (slag or acid residue), and rust to a near-white finish after welding or coupling. Check the existing epoxy for damage. Remove any damaged or loose epoxy back to sound epoxy coating.

Coat the splice area after cleaning with epoxy repair material to a thickness of 7 to 17 mils after curing. Apply a second application of repair material to the bar and coupler interface to ensure complete sealing of the joint.

3.6.3. **Repairing Coating**. Use material that complies with the requirements of this Item and ASTM D3963 for repairing of the coating. Make repairs in accordance with procedures recommended by the manufacturer of the epoxy coating powder. Apply at least the same coating thickness as required for the original coating for areas to be patched. Repair all visible damage to the coating.

Repair sawed and sheared ends, cuts, breaks, and other damage promptly before additional oxidation occurs. Clean areas to be repaired to ensure they are free from surface contaminants. Make repairs in the shop or field as required.

3.7. **Handling and Placing Stainless Reinforcing Steel**. Handle, cut, and place stainless reinforcing steel bar using tools that are not used on carbon steel. Do not use carbon steel tools, chains, slings, etc. when handling stainless steel. Use only nylon or polypropylene slings. Cut stainless steel reinforcing using shears, saws, abrasive cutoff wheels, or torches. Remove any thermal oxidation using pickling paste. Do not field bend stainless steel reinforcing without approval.

Use 16 gauge fully annealed stainless steel tie wire conforming to the material properties listed in Section 440.2.10., “Stainless Reinforcing Steel.” Support all stainless reinforcing steel on solid plastic, stainless steel, or epoxy coated steel chairs. Do not use uncoated carbon steel chairs in contact with stainless reinforcing steel.

3.8. **Bending, Handling, Repairing, and Placing GFRP Bars**. Fabricate, handle, repair, and place GFRP bars in accordance with the AASHTO LRFD Bridge Design Guide Specifications for GFRP-Reinforced Concrete Bridge Decks and Traffic Railings, Section 5, Construction Specifications.

4. MEASUREMENT AND PAYMENT

The work performed, materials furnished, equipment, labor, tools, and incidentals will not be measured or paid for directly but will be considered subsidiary to pertinent Items.

Item 441
Steel Structures

1. DESCRIPTION

Fabricate and erect structural steel and other metals used for steel structures or for steel portions of structures.

2. MATERIALS

2.1. **Base Metal**. Use metal that meets Item 442, "Metal for Structures."

2.2. **Approved Electrodes and Flux-Electrode Combinations**. Use only electrodes and flux-electrode combinations found on the Department's MPL. To request a product be added to this list or to renew an expired approval, electronically submit a current Certificate of Conformance containing all tests required by the applicable AWS A5 specification according to the applicable welding code (for most construction, AASHTO/AWS D1.5, *Bridge Welding Code*, or AWS D1.1*, Structural Welding Code—Steel*) to the Construction Division.

2.3. **High-Strength Bolts**. Use fasteners that meet Item 447, "Structural Bolting." Use galvanized fasteners on field connections of bridge members when ASTM A325 bolts are specified and steel is painted.

2.4. **Paint Systems**. Provide the paint system (surface preparation, primer, intermediate, and appearance coats as required) shown on the plans. Provide System IV if no system is specified.

2.4.1. **Standard Paint Systems**. Standard paint systems for painting new steel include the following:

2.4.1.1. **System III-B**. Provide paint in accordance with DMS-8101, "Structural Steel Paints-Performance." Provide inorganic zinc (IOZ) prime coat, epoxy intermediate coat, and urethane appearance coat for all outer surfaces except those to be in contact with concrete. Provide epoxy zinc prime coat for touchup of IOZ.

2.4.1.2. **System IV**. Provide paint in accordance with DMS-8101, "Structural Steel Paints-Performance." Provide IOZ prime coat and acrylic latex appearance coat for all outer surfaces except those to be in contact with concrete. Provide epoxy zinc prime coat for touchup of IOZ.

2.4.2. **Paint Inside Tub Girders and Closed Boxes**. Provide a white polyamide cured epoxy for all interior surfaces, including splice plate but excluding the faying surfaces, unless otherwise shown on the plans. Provide IOZ primer meeting the requirements of DMS-8101, "Structural Steel Paints—Performance," to all interior faying surfaces and splice plates.

2.4.3. **Special Protection System**. Provide the type of paint system shown on the plans or in special provisions to this Item. Special Protection Systems must have completed NTPEP Structural Steel Coatings (SSC) testing regimen as a complete system, with full data available through NTPEP.

2.4.4. **Galvanizing**. Provide galvanizing, as required, in accordance with Item 445, "Galvanizing."

2.4.5. **Paint over Galvanizing**. Paint over galvanized surfaces, when required, in accordance with Item 445, "Galvanizing."

2.4.6. **Field Painting**. Provide field paint, as required, in accordance with Item 446, "Field Cleaning and Painting Steel."

3. CONSTRUCTION

3.1. **General Requirements**.

3.1.1. **Applicable Codes**. Perform all fabrication of bridge members in accordance with AASHTO/NSBA Steel Bridge Collaboration S2.1. Follow all applicable provisions of the appropriate AWS code (D1.5 or D1.1) except as otherwise noted on the plans or in this Item. Weld sheet steel (thinner than 1/8 in.) in accordance with ANSI/AWS D1.3, Structural Welding Code—Sheet Steel. Unless otherwise stated, requirements of this Item are in addition to the requirements of S2.1 for bridge members. Follow the more stringent requirement in case of a conflict between this Item and S2.1. Perform all bolting in accordance with Item 447, "Structural Bolting."

Fabricate railroad underpass structures in accordance with the latest AREMA *Manual for Railway Engineering* and this Item. In the case of a conflict between this Item and the AREMA manual, the more stringent requirements apply.

3.1.2. **Notice of Fabrication**. Give adequate notice before commencing fabrication work as specified in Table 1. Include a schedule for all major fabrication processes and dates when inspections are to occur.

Table 1
Notice of Beginning Work

Plant Location	Notice Required
In Texas	7 days
In the contiguous United States	21 days
Outside the contiguous United States	60 days

Perform no Department work in the plant before the Engineer authorizes fabrication. The Contractor must bear all Department travel costs when changes to their fabrication or inspection schedules are not adequately conveyed to the Department.

When any structural steel is fabricated outside of the contiguous 48 states, the additional cost of inspection will be in accordance with Article 6.4., "Sampling, Testing, and Inspection."

3.1.3. **Bridge Members**. Primary bridge members include:

- web and flanges of plate, tub, and box girders;
- rolled beams and cover plates;
- floor beam webs and flanges;
- arch ribs and arch tie beams or girders;
- truss members;
- diaphragm members for curved plate girders or beams;
- pier diaphragm members for tub girders;
- splice plates for primary members; and
- any other member designated as "primary" or "main" on the plans.

Secondary bridge members include:

- bracing (diaphragms, cross frames, and lateral bracing); and
- all other miscellaneous bridge items not considered primary bridge members.

3.1.4. **Responsibility**. The Contractor is responsible for the correctness and completeness of shop drawings and for the fit of shop and field connections.

3.1.5. **Qualification of Plants and Personnel**.

3.1.5.1. **Plants**. Fabrication plants that produce bridge members must be approved in accordance with DMS-7370, "Steel Bridge Member Fabrication Plant Qualification." The Department's MPL has a list of approved bridge member fabrication plants.

Fabrication plants that produce non-bridge steel members listed below must be approved in accordance with DMS-7380, "Steel Non-Bridge Member Fabrication Plant Qualification." The Construction Division maintains a list of approved non-bridge fabrication plants for the following items:

- Roadway Illumination Poles,
- High Mast Illumination Poles,
- High Mast Rings and Support Assemblies,
- Overhead Sign Support Structures,
- Traffic Signal Poles, and
- Intelligent Transportation System (ITS) Poles

The Department will evaluate non-bridge member fabrication plants for competence of the plant, equipment, organization, experience, knowledge, and personnel to produce acceptable work.

3.1.5.2. **Personnel**. Provide a QC staff qualified in accordance with the applicable AWS code. Provide an adequate number of qualified QC personnel for each specific production operation. QC must be on-site and independent of production personnel, as the Engineer determines. QC personnel must be proficient in utilizing the applicable plans, specifications, and test methods, and in verifying compliance with the plant QC and production procedures. Welding inspectors must be current AWS Certified Welding Inspectors for bridge member plants, and for non-bridge member plants requiring Department approval per DMS-7380, "Steel Non-Bridge Member Fabrication Plant Qualification." The QC staff must provide inspection of all materials and workmanship before the Department's inspection. Provide the Department inspector with adequate personnel and equipment needed to move material for inspection access. QC is solely the Contractor's responsibility.

3.1.5.3. **Nondestructive Testing (NDT)**. Personnel performing NDT must be qualified in accordance with the applicable AWS code and the employer's Written Practice. Level III personnel who qualify AS Level I and Level II inspectors must be certified by ASNT for which the NDT Level III is qualified. Testing agencies and individual third-party contractors must also successfully complete periodic audits for compliance, performed by the Department. In addition, ultrasound technicians must pass a hands-on test the Construction Division administers. This will remain current provided they continue to perform testing on Department materials as evidenced by test reports requiring their signature. A technician who fails the hands-on test must wait 6 months before taking the test again. Qualification to perform ultrasonic testing will be revoked when the technician's employment is terminated or when the technician goes 6 months without performing a test on a Department project. The technician must pass a new hands-on test to be re-certified.

3.1.5.4. **Welding Procedure Specifications Qualification Testing**. For bridge member fabrication, laboratories performing welding procedure specifications (WPSs) qualified by testing must be approved in accordance with DMS-7360, "Qualification Procedure for Laboratories Performing Welding Procedure Qualification Testing." The Department's MPL has a list of laboratories approved to perform WPS qualification testing.

3.1.6. **Drawings**.

3.1.6.1. **Erection Drawings**. Submit erection drawings prepared by a licensed professional engineer, including calculations, for approval in accordance with Item 5, "Control of the Work," at least 4 weeks before erecting any portion of field-spliced (welded or bolted) girders, railroad underpasses, trusses, arches, or other members for which erection drawings are required on the plans. Include drawings and calculations for any temporary structures used to support partially erected members. Erection drawings are not required for rolled I-beam units unless otherwise noted on the plans.

Prepare erection drawings following the procedures outlined in Section 2.2 of the AASHTO/NSBA Steel Bridge Collaboration S10.1. As a minimum, include:

- plan of work area showing structure location relative to supports and all obstructions;
- equipment to be used including allowable load information;
- erection sequence for all pieces;
- member weights and center of gravity location of pieces to be lifted;
- locations of cranes, holding cranes, and temporary supports (falsework), including when to release load from temporary supports and holding cranes;
- details of falsework including specific bracing requirements with maximum allowable design wind speed clearly indicated;
- girder lifting points;
- diaphragm and bracing requirements; and
- minimum connection requirements when more than the standard requirements.

Perform girder erection analyses using UT-Lift and UT-Bridge software available on the Department's website or other suitable commercial software. Ensure temporary stresses in members being erected will not cause permanent damage and that stability is maintained throughout the erection operations. Provide actual input files and output results from UT-Lift and UT-Bridge, or graphical and hard copy results from commercial software programs.

Do not proceed if site conditions differing from those depicted on the approved erection drawings could affect temporary support stresses, erected girders, or public safety in any manner. Revise erection drawings and resubmit to the Engineer for approval before proceeding if site conditions could affect these things.

3.1.6.2. **Shop Drawings**. Prepare and electronically submit shop drawings before fabrication for each detail of the general plans requiring the use of structural steel, forgings, wrought iron, or castings as documented in the *Guide to Electronic Shop Drawing Submittal* available on the Bridge Division website and as directed for other items the standard specifications require.

Indicate joint details on shop drawings for all welds. Provide a title block on each sheet in the lower right corner that includes:

- project identification data including federal and state project numbers,
- sheet numbering for the shop drawings,
- name of the structure or stream for bridge structures,
- name of owner or developer,
- name of the fabricator or supplier, and
- name of the Contractor.

Provide one set of 11 × 17-in. approved shop drawings in hardcopy to the Department for the inspector at the fabrication plant.

3.1.6.2.1. **Bridge Members**. Prepare drawings in accordance with AASHTO/NSBA Steel Bridge Collaboration G1.3, "Shop Detail Drawing Presentation" unless otherwise approved. Print a bill of material on each sheet, including the Charpy V-Notch (CVN) and fracture-critical requirements, if any, for each piece. Indicate fracture-critical areas of members.

3.1.6.2.2. **Non-Bridge Members**. Furnish shop drawings for non-bridge members when required by the plans or pertinent Items.

3.1.7. **Welding Procedure Specifications (WPSs)**. Submit WPSs and test reports in accordance with the applicable AWS code to the Construction Division before fabrication begins, and notify the Engineer which procedures will be used for each joint or joint type. Do not begin fabrication until the Engineer approves WPSs.

Post the approved WPSs for the welding being performed on each welding machine, or use another approved method of ensuring the welder has access to the procedure information at all times.

3.1.8. **Documentation**. Before beginning fabrication, provide a completed Material Statement Form 1818 (a.k.a. D-9-USA-1) with supporting documentation (such as mill test reports (MTRs)) that the producing mill issues and qualified personnel verifies. Ensure the documentation legibly reflects all information the applicable ASTM specifications require. Supply documents electronically to the Department.

Provide a copy of the shipping or storage invoice, as material is shipped or placed in approved storage that reflects:

- member piece mark identification and calculated weight per piece from the contract drawings,
- number of pieces shipped or in storage,
- total calculated weight for each invoice per bid item, and
- the unique identification number of the shipping or storage invoice.

The inspector's acceptance of material or finished members will not prohibit subsequent rejection if the material or members are found to be damaged or defective. Replace rejected material promptly.

3.1.9. **Material Identification**. Assembly-mark individual pieces and issue cutting instructions to the shop using a system that will maintain identity of the original piece.

Identify structural steel by standard and grade of steel. Also differentiate between material toughness requirements (CVN, fracture-critical) as well as any other special physical requirements. In addition, identify structural steel for primary members by mill identification numbers (heat numbers). Use an approved identification system. Use either paint or low-stress stencils to make identification markings on the metal. Mark the material as soon as it enters the shop and carry the markings on all pieces through final fabrication. Transfer the markings before cutting steel for primary members of bridge structures into smaller pieces. Loss of identification marking on any piece, with no other positive identification, or loss of heat number identification on any primary member piece will render the piece unacceptable for use. Unidentifiable material may be approved for use after testing to establish acceptability to the satisfaction of the Engineer. Have an approved testing facility perform testing and a licensed professional engineer sign and seal the results.

3.2. **Welding**.

3.2.1. **Details**.

3.2.1.1. **Rolled Edges**. Trim plates with rolled edges used for webs by thermal cutting.

3.2.1.2. **Weld Tabs**. Use weld tabs at least 2 in. long for manual and semi-automatic processes, at least 3 in. long for automatic processes, and in all cases at least as long as the thickness of the material being welded. Use longer weld tabs as required for satisfactory work.

3.2.1.3. **Weld Termination**. Terminate fillet welds approximately 1/4 in. from the end of the attachment except for galvanized structures and flange-to-web welds, for which the fillet weld must run the full length of the attachment, unless otherwise shown on the plans.

3.2.1.4. **No-Paint Areas at Field-Welded Connections**. Keep surfaces within 4 in. of groove welds or within 2 in. of fillet welds free from shop paint.

3.2.1.5. **Galvanized Assemblies**. Completely seal all edges of tightly contacting surfaces by welding before galvanizing.

3.2.1.6. **Submerged-Arc Welding (SAW)**. Do not use hand-held semiautomatic SAW for welding bridge members unless altered to provide automatic guidance or otherwise approved.

3.2.1.7. **Tubular Stiffeners for Bridge Members**. Weld in accordance with AWS D1.5, using WPSs qualified based on tests on ASTM A709 Gr. 50W or Gr. 50 steel for non-weathering applications and ASTM A709 Gr. 50W steel for weathering applications.

3.2.1.8. **Non-Bridge Member Weathering Steel Welds**. Provide weld metal with atmospheric corrosion resistance and coloring characteristics similar to that of the base metal for weathering steel structures fabricated per AWS D1.1.

3.2.2. **Shop Splices**.

3.2.2.1. **Shop Splice Locations**. Keep at least 6 in. between shop splices and stiffeners or cross-frames. Obtain approval for shop splices added after shop drawings are approved.

3.2.2.2. **Grinding Splice Welds**. Grind shop groove welds in flange plates smooth and flush with the base metal on all surfaces whether the joined parts are of equal or unequal thickness. Grind so the finished grinding marks run in the direction of stress, and keep the metal below the blue brittle range (below 350°F). Groove welds in web plates, except at locations of intersecting welds, need not be ground unless shown on the plans except as required to meet AWS welding code requirements.

3.2.3. **Joint Restraint**. Never restrain a joint on both sides when welding.

3.2.4. **Stiffener Installation**.

3.2.4.1. **Flange Tilt**. Members must meet combined tilt and warpage tolerances before the installation of stiffeners. Cut stiffeners to fit acceptable flange tilt and cupping. Minor jacking or hammering that does not permanently deform the material will be permitted.

3.2.4.2. **Stiffeners Near Field Splices**. Tack weld intermediate stiffeners within 12 in. of a welded field splice point in the shop. Weld the stiffeners in the field in accordance with Item 448, "Structural Field Welding," after the splice is made.

3.2.5. **Nondestructive Testing (NDT)**. Perform magnetic particle testing (MT), radiographic testing (RT), or ultrasonic testing (UT) at the Contractor's expense as specified in D1.5 for bridge structures. The Engineer will periodically witness, examine, verify, and interpret NDT. Additional welds may be designated for NDT on the plans. Retest repaired groove welds per the applicable AWS code after repairs are made and have cooled to ambient temperature. Complete NDT and repairs before assembly of parts into a member, but after any heat-correction of weld distortion.

3.2.5.1. **Radiographic Testing**. Radiographs must have a density of at least 2.5 and no more than 3.5, as a radiographer confirms. The density in any single radiograph showing a continuous area of constant thickness must not vary in this area by more than 0.5. Use only ASTM System Class I radiographic film as described in ASTM E1815. Use low-stress stencils to make radiograph location identification marks on the steel.

3.2.5.2. **Ultrasonic Testing**. Have UT equipment calibrated yearly by an authorized representative of the equipment manufacturer or by an approved testing laboratory.

3.2.5.3. **Magnetic Particle Testing**. Use half-wave rectified DC when using the yoke method unless otherwise approved. Welds may be further evaluated with prod method for detecting centerline cracking.

3.2.6. **Testing of Galvanized Weldments**. If problems develop during galvanizing of welded material, the Engineer may require a test of the compatibility of the combined galvanizing and welding procedures in accordance with this Section and may require modification of one or both of the galvanizing and welding procedures.

Prepare a test specimen with a minimum length of 12 in. using the same base material, with the same joint configuration, and using the welding procedure proposed for production work if testing is required. Clean and

galvanize this test specimen using the same conditions and procedure that will be applied to the production galvanizing.

Examine the test specimen after galvanizing. There must be no evidence of excessive buildup of zinc coating over the weld area. Excessive zinc coating buildup will require modification of the galvanizing procedure.

Remove the zinc from the weld area of the test specimen and visually examine the surface. There must be no evidence of loss of weld metal or any deterioration of the base metal due to the galvanizing or welding procedure. Modify the galvanizing or welding procedure as required if there is evidence of deterioration or loss of weld metal, and run a satisfactory retest on the modified procedures before production work. Report procedures and results on the galvanized weldment worksheet provided by the Department.

3.3. **Bolt Holes**. Detail holes on shop drawings 1/16 in. larger in diameter than the nominal bolt size shown on the plans unless another hole size is shown on the plans.

Thoroughly clean the contact surfaces of connection parts in accordance with Item 447, "Structural Bolting," before assembling them for hole fabrication. Make holes in primary members full-size (by reaming from a subsize hole, drilling full-size, or punching full-size where permissible) only in assembly unless otherwise approved.

Ream and drill with twist drills guided by mechanical means unless otherwise approved. If subpunching holes, punch them at least 3/16 in. smaller than the nominal bolt size. Submit the proposed procedures for approval to accomplish the work from initial drilling or punching through check assembly when numerically controlled (N/C) equipment is used. Use thermal cutting for holes only with permission of the Engineer. Permission for thermal cutting is not required for making slotted holes, when slotted holes are shown on the plans, by drilling or punching 2 holes and then thermally cutting the straight portion between them. Perform all thermal cutting in accordance with Section 441.3.5.1., "Thermal Cutting."

Slightly conical holes that naturally result from punching operations are acceptable provided they do not exceed the tolerances of S2.1. The tolerance for anchor bolt hole diameter for bridge bearing assemblies is +1/8 in., −0.

3.4. **Dimensional Tolerances**. Meet tolerances of the applicable AWS specifications and S2.1 except as modified in this Section.

3.4.1. **Rolled Sections**. Use ASTM A6 mill tolerances for rolled sections, except D1.5 camber tolerances apply to rolled sections with a specified camber.

3.4.2. **Flange Straightness**. Ensure flanges of completed girders are free of kinks, short bends, and waviness that depart from straightness or the specified camber by more than 1/8 in. in any 10 ft. along the flange. Rolled material must meet this straightness requirement before being laid out or worked. Plates must meet this requirement before assembly into a member. Inspect the surface of the metal for evidence of fracture after straightening a bend or buckle. The Engineer may require nondestructive testing.

3.4.3. **Alignment of Deep Webs in Welded Field Connections**. For girders 48 in. deep or deeper, the webs may be slightly restrained while checking compliance with tolerances of S2.1 for lateral alignment at field-welded connections. In the unrestrained condition, webs 48 in. deep or deeper must meet the tolerances of Table 2. Girders under 48 in. deep must meet the alignment tolerances of S2.1.

Table 2
Web Alignment Tolerances for Deep Girders

Web Depth (in.)	Maximum Web Misalignment (in.)
48	1/16
60	1/8
72	1/4
84	5/16
96	5/16
108	3/8
120	7/16
132	7/16
144	1/2

3.4.4. **Bearings**. Correct bearing areas of shoes, beams, and girders using heat, external pressure, or both. Grind or mill only if the actual thickness of the member is not reduced by more than 1/16 in. below the required thickness.

3.4.4.1. **I-Beams, Plate Girders, and Tub Girders**. The plane of the bearing area of beams and girders must be perpendicular to the vertical axis of the member within 1/16 in. in any 24 in.

3.4.4.2. **Closed Box Girders**. Meet these tolerances:

- The plane of the bearing areas of the box girder is perpendicular to the vertical axis of the girder within 1/16 in. across any horizontal dimension of the bearing.
- The planes of the beam supports on the box girder are true to the vertical axis of the supported beams or girders to 1/16 in. in any 24 in.

In the shop, verify the plane of all bearing areas with the box placed on its bearings to field grade, using an approved process for verification.

3.4.4.3. **Shoes**. Meet these tolerances:

- The top bolster has the center 75% of the long dimension (transverse to the girder) true to 1/32 in., with the remainder true to 1/16 in., and is true to 1/32 in. across its entire width in the short dimension (longitudinal to the girder).
- The bottom bolster is true to 1/16 in. across its diagonals.
- For a pin and rocker type expansion shoe, the axis of rotation coincides with the central axis of the pin.
- When the shoe is completely assembled, as the top bolster travels through its full anticipated range, no point in the top bolster plane changes elevation by more than 1/16 in. and the top bolster does not change inclination by more than 1 degree, for the full possible travel.

3.4.4.4. **Beam supports**. Fabricate beam support planes true to the box girder bearing to 1/16 in. in the short direction and true to the vertical axis of the nesting girders to 1/16 in.

3.4.5. **End Connection Angles**. For floor beams and girders with end connection angles, the tolerance for the length back to back of connection angles is ±1/32 in. Do not reduce the finished thickness of the angles below that shown on the shop drawings if end connections are faced.

3.5. **Other Fabrication Processes**.

3.5.1. **Thermal Cutting**. Use a mechanical guide to obtain a true profile. Hand-cut only where approved. Hand-cutting of radii for beam copes, weld access holes, and width transitions is permitted if acceptable profile and finish are produced by grinding. Provide a surface finish on thermal-cut surfaces, including holes, in accordance with D1.5 requirements for base metal preparation. Obtain approval before using other cutting processes.

3.5.2. **Oxygen-Gouging**. Do not oxygen-gouge quenched and tempered (Q&T), normalized, or thermo-mechanically controlled processed (TMCP) steel.

3.5.3. **Annealing and Normalizing**. Complete all annealing or normalizing (as defined in ASTM A941) before finished machining, boring, and straightening. Maintain the temperature uniformly throughout the furnace during heating and cooling so the range of temperatures at all points on the member is no more than 100°F.

3.5.4. **Machining**. Machine the surfaces of expansion bearings so the travel direction of the tool is in the direction of expansion.

3.5.5. **Camber**. Complete cambering in accordance with S2.1 before any heat-curving.

3.5.6. **Heat Curving**. Heat-curve in accordance with S2.1. The methods in the AASHTO bridge construction specifications are recommended. Attach cover plates to rolled beams before heat-curving only if the total thickness of one flange and cover plate is less than 2-1/2 in. and the radius of curvature is greater than 1,000 ft. Attach cover plates for other rolled beams only after heat-curving is completed. Locate and attach connection plates, diaphragm stiffeners, and bearing stiffeners after curving, unless girder shrinkage is accounted for.

3.5.7. **Bending of Quenched and Tempered Steels**. The cold-bending radius limitations for HPS 70W in S2.1 apply to all Q&T steels.

3.6. **Nonconformance Reports (NCRs)**. Submit an NCR to the Engineer for approval when the requirements of this Item are not met. Submit NCRs in accordance with the Construction Division's NCR guidelines document. Have readily available access to the services of a licensed professional engineer experienced in steel structures design and fabrication. This licensed professional engineer may be responsible for reviewing potentially structurally deficient members in accordance with the NCR guidelines document. Receive Department approval before beginning repairs. Perform all repair work in strict compliance with the approved NCR and repair procedure.

3.7. **Shop Assembly**.

3.7.1. **General Shop Assembly**. Shop-assemble field connections of primary members of trusses, arches, continuous beam spans, bents, towers (each face), plate girders, field connections of floor beams and stringers (including for railroad structures), field-bolted diaphragms for curved plate girders and railroad underpasses, and rigid frames. Field-bolted cross-frames and rolled-section diaphragms do not require shop assembly. Complete fabrication, welding (except for shear studs), and field splice preparation before members are removed from shop assembly. Obtain approval for any deviation from this procedure. The Contractor is responsible for accurate geometry.

Use a method and details of preassembly consistent with the erection procedure shown on the erection plans and camber diagrams. The sequence of assembly may start from any location in the structure and proceed in one or both directions. An approved method of sequential geometry control is required unless the full length of the structure is assembled.

Verify by shop assembly the fit of all bolted and welded field connections between bent cap girders and plate girders or between plate girders and floor beams.

Do not measure horizontal curvature and vertical camber for final acceptance until all welding and heating operations are completed and the steel has cooled to a uniform temperature. Check horizontal curvature and vertical camber in a no-load condition.

3.7.2. **Bolted Field Connections**. Each shop assembly, including camber, alignment, accuracy of holes, and fit of milled joints, must be approved before the assembly is dismantled.

Assemble with milled ends of compression members in full bearing. Assemble non-bearing connections to the specified gap. Ream all subsize holes to the specified size while the connections are assembled, or drill full size while the connections are assembled. Notify the Engineer before shipping if fill plates or shims are added. Adding or increasing the thickness of shims or fill plates in bearing connections requires approval. Use drift pins and snug-tight bolts during the drilling process to ensure all planes of the connection (webs and flanges) can be assembled simultaneously. Do not use tack welds to secure plates while drilling.

Secure parts not completely bolted in the shop with temporary bolts to prevent damage in shipment and handling. Never use tack welds in place of temporary bolts.

Match-mark connecting parts in field connections using low-stress stencils in accordance with the diagram in the erection drawings.

3.7.3. **Welded Field Connections**. Mill or grind bevels for groove welds. Do not cut into the web when cutting the flange bevel adjacent to the web. End preparation, backing, and tolerances for girder splices must be in accordance with Item 448, “Structural Field Welding.” Details for all other field-welds must conform to the applicable AWS code unless otherwise shown on the plans.

In the shop, prepare ends of beams or girders to be field-welded taking into account their relative positions in the finished structure due to grade, camber, and curvature. Completely shop-assemble and check each splice. Match-mark the splice while it is assembled with low-stress stencils in accordance with the diagram in the erection drawings.

3.8. **Finish and Painting**.

3.8.1. **Shop Painting**. Perform shop painting of bridge members as required in DMS-8104, “Paint, Shop Application for Steel Bridge Members.” Grind corners on new steel items to be painted (except for the coatings on box and tub girder interiors) that are sharp or form essentially 90° angles to an approximately 1/16 in. flat surface before blast cleaning. (A corner is the intersection of 2 plane faces.) This requirement does not apply to punched or drilled holes. Do not omit shop paint to preserve original markings.

Ensure painted faying surfaces meet the required slip and creep coefficients for bolted connections as outlined in DMS-8104, “Paint, Shop Application for Steel Bridge Members.”

Use a Class A slip (minimum slip coefficient of 0.33) if no slip coefficient or corresponding surface condition is specified Perform all required testing at no expense to the Department.

Surface preparation and painting the interiors of Tub Girders and Closed Boxes is in accordance with DMS-8104, “Paint, Shop Application for Steel Bridge Members.”

3.8.2. **Weathering Steel**. Provide an SSPC-SP 6 blast in the shop to all fascia surfaces of unpainted weathering steel beams. Fascia surfaces include:

- exterior sides of outermost webs and undersides of bottom flanges of plate girders and rolled beams,
- all outer surfaces of tub girders and box girders,
- all surfaces of truss members,
- webs and undersides of bottom flanges of plate diaphragms,
- bottom surfaces of floor beams, and
- any other surfaces designated as “fascia” on the plans.

Do not mark fascia surfaces. Use one of the following methods as soon as possible to remove any markings or any other foreign material that adheres to the steel during fabrication and could inhibit the formation of oxide film:

- SSPC-SP 1, “Solvent Cleaning,”
- SSPC-SP 2, “Hand Tool Cleaning,”
- SSPC-SP 3, “Power Tool Cleaning,” and

- SSPC-SP 7, "Brush-off Blast Cleaning."

Do not use acids to remove stains or scales. Feather out touched-up areas over several feet.

3.8.3. **Machined Surfaces**. Clean and coat machine-finished surfaces that are in sliding contact, particularly pins and pinholes, with a non-drying, water-repellent grease-type material containing rust-inhibitive compounds. Ensure the coating material contains no ingredients that might damage the steel. Protect machined surfaces from abrasive blasting.

3.9. **Handling and Storage of Materials**. Prevent damage when storing or handling girders or other materials. Remove or repair material damaged by handling devices or improper storage by acceptable means in accordance with ASTM A6 and the applicable AWS code.

Place stored materials on skids or acceptable dunnage above the ground. Keep materials clean. Shore girders and beams to keep them upright and free of standing water. Place support skids close enough to prevent excessive deflection in long members such as columns. Do not stack completed girders or beams at the jobsite.

Protect structural steel from salt water or other corrosive environments during storage and transit.

3.10. **Marking and Shipping**. Mark all structural members in accordance with the erection drawings. If a surface is painted, make the marks over the paint. Do not use impact-applied stencils to mark painted surfaces.

Mark the weight directly on all members weighing more than 3 tons.

Keep material clean and free from injury during loading, transportation, unloading, and storage. Pack bolts of each length and diameter, and loose nuts or washers of each size, separately and ship them in boxes, crates, kegs, or barrels. Plainly mark a list and description of the contents on the outside of each package.

3.11. **Field Erection**. Do not lift and place any steel member, including girders and diaphragms, over an open highway or other open travel way unless otherwise approved. Do not allow traffic to travel under erected members until sufficiently stable as shown on approved erection drawings.

3.11.1. **Pre-Erection Conference**. Schedule and attend a pre-erection conference with the Engineer at least 7 days before commencing steel erection operations. Do not install falsework or perform any erection operations before the meeting.

3.11.2. **Methods and Equipment**. Do not tack-weld parts instead of using erection bolts. Do not tack-weld parts to hold them in place for bolting. Provide falsework, tools, machinery, and appliances, including drift pins and erection bolts. Provide enough drift pins, 1/32 in. larger than the connection bolts, to fill at least 1/4 of the bolt holes for primary connections. Use erection bolts of the same diameter as the connection bolts.

Securely tie, brace, or shore steel beams or girders immediately after erection as shown on the erection drawings. Maintain bracing or shoring until the diaphragms are in place and as specified in the erection drawings. Protect railroad, roadway, and marine traffic underneath previously erected girders or beams from falling objects associated with other construction activities.

Only welders certified or working directly under the supervision of a foreman certified in accordance with Item 448, "Structural Field Welding," may handle torches when applying heat to permanent structural steel members.

3.11.3. **Falsework**. Construct falsework in accordance with the erection plan. Construct foundations for shore towers as shown on erection drawings. Do not use timber mats with deteriorated timbers or soil to construct shore tower foundations. Notify the Engineer of completed falsework to obtain approval before opening roadway to traffic or starting girder erection activities. Ensure falsework is protected from potential vehicle impact.

Inspect and maintain falsework daily. Use screw jacks or other approved methods to control vertical adjustment of falsework to minimize the use of shims.

3.11.4. **Handling and Assembly**. Accurately assemble all parts as shown on the plans and the approved shop drawings. Verify match-marks. Handle parts carefully to prevent bending or other damage. Do not hammer if doing so damages or distorts members. Do not weld any member for transportation or erection unless noted on the plans or approved by the Engineer.

3.11.4.1. **Welded Connections**. Weld flange splices to 50% of their thickness and meet the minimum erection bracing and support requirements before releasing the erection cranes, as shown on the plans and on the approved erection plans. Field-weld in accordance with Item 448, "Structural Field Welding."

3.11.4.2. **Bolted Connections**. Before releasing the erection cranes:

- install 50% of the bolts in the top and bottom flanges and the web with all nuts finger-tight,
- meet the minimum erection bracing and support requirements shown on the plans and on the approved erection plans, and
- install top lateral bracing across the connection for tub girders, and fully tension the bolts connecting the bracing to the top flanges.

Install high-strength bolts, including erection bolts, in accordance with Item 447, "Structural Bolting." Clean bearing and faying surfaces for bolted connections in accordance with Item 447, "Structural Bolting." Clean the areas of the outside ply under washers, nuts, and bolt heads before bolt installation. Ensure the required faying surface condition is present at the time of bolting.

3.11.5. **Misfits**. Correct minor misfits. Ream no more than 10% of the holes in a plate connection (flange or web), and ensure no single hole is more than 1/8 in. larger than the nominal bolt diameter. Submit proposed correction methods for members with defects that exceed these limits or prevent the proper assembly of parts. Straighten structural members in accordance with S2.1. Make all corrections in the presence of the Engineer at no expense to the Department. Do not remove and reweld gusset plates without approval.

3.11.6. **Bearing and Anchorage Devices**. Place all bearing devices such as elastomeric pads, castings, bearing plates, or shoes on properly finished bearing areas with full and even bearing on the concrete. Place metallic bearing devices on 1/4 in.-thick preformed fabric pads manufactured in accordance with DMS-6160, "Water Stops, Nylon-Reinforced Neoprene Sheet, and Elastomeric Pads," to the dimensions shown on the plans. Provide holes in the pad that are no more than 1/4 in. larger than the bolt diameter.

Build the concrete bearing area up to the correct elevation once it has been placed below grade using mortar that meets Item 420, "Concrete Substructures," and provide adequate curing. Use only mortar for build-ups between 1/8 in. and 3/8 in. thick. Use galvanized steel shims or other approved shim materials in conjunction with mortar if the bearing area must be raised more than 3/8 in.

Provide at least 75% contact of flange to shoe with no separation greater than 1/32 in. for beams and girders. Make corrections using heat or pressure in accordance with S2.1, or with galvanized shims. Correct small irregularities by grinding.

Provide at least 85% contact between the rocker plate and the base plate. Adjust the location of slotted holes in expansion bearings for the prevailing temperature. Adjust the nuts on the anchor bolts at the expansion ends of spans to permit free movement of the span. Provide lock nuts or burr the threads.

Remove all foreign matter from sliding or machine-finished surfaces before placing them in the structure.

Restore distorted bearing pads or expansion bearings to an equivalent 70°F position after completion of all welded or bolted splices, using an approved method of relieving the load on the bearing devices.

3.11.7. **Erecting Forms**. Do not erect forms until all welding or bolting is complete and the unit is positioned and properly set on the bearings unless otherwise noted on the plans.

3.11.8. **Field Finish**. Paint in accordance with Item 446, "Field Cleaning and Painting Steel." Restore weathering steel that will remain unpainted to a uniform appearance by solvent cleaning, hand cleaning, power brush, or blast cleaning after all welding and slab concrete placement has been completed. Remove from all unpainted weathering steel fascia surfaces (see Section 441.3.8.2., "Weathering Steel,") any foreign material, including markings, that adheres to the steel and could inhibit formation of oxide film as soon as possible. Feather out touched-up areas over several feet. Do not use acids to remove stains or scales.

4. MEASUREMENT AND PAYMENT

The work performed, materials furnished, equipment, labor, tools, and incidentals will not be measured or paid for directly but will be subsidiary to pertinent Items.

Item 442
Metal for Structures

1. DESCRIPTION

Provide structural steel, high-strength bolts, forgings, steel castings, iron castings, wrought iron, steel pipe and tubing, aluminum castings and tubing, or other metals used in structures, except reinforcing steel and metal culvert pipe.

2. MATERIALS

Furnish mill test reports (MTRs), supplemental test documentation, and certifications required by this and other pertinent Items.

2.1. **Structural Steel**. The Engineer may sample and test steel in accordance with ASTM A370.

2.1.1. **Bridge Structures**. Provide the grade of ASTM A709 steel shown on the plans. Grade 50W, 50S, or HPS 50W may be substituted for Grade 50 at no additional cost to the Department. Use Zone 1 if no AASHTO temperature zone is shown on the plans.

2.1.2. **Non-Bridge Structures**.

2.1.2.1. **Steel Classifications**. Provide the types and grades of steel listed in this Section unless otherwise shown on the plans.

2.1.2.1.1. **Carbon Steel**. Meet ASTM A36.

2.1.2.1.2. **Low-Alloy Steel**. Meet the requirements of one of the following standards:

- ASTM A529 Grade 50;
- ASTM A572 Grade 50 or 55;
- ASTM A588;
- ASTM A709 Grade 50, 50S, 50W, or HPS 50W; or
- ASTM A992.

Specify ASTM A6 supplemental requirement S18, “Maximum Tensile Strength,” for material used for sign, signal, and luminaire supports.

2.1.2.2. **Impact Testing**. Tension members and components of the following structure types, if more than 1/2 in. thick. Other members designated on the plans must meet the Charpy V-notch (CVN) requirements of Table 1:

- base plates for roadway illumination assemblies, traffic signal pole assemblies, high mast illumination poles, camera poles, and overhead sign supports;
- pole mounting plates, arm mounting plates, and clamp-on plates for traffic signal pole assemblies;
- arm stiffeners, pole gussets, and stiffeners for traffic signal pole long mast arm assemblies (50 ft. to 65 ft.);
- pole shafts, ground sleeves, and handhole frames for high mast illumination poles;
- W-columns, tower pipes, multiple-sided shafts, tower pipe and multiple-sided shaft connection plates, chord angles, chord splice plates or angles, and truss bearing angles for truss type overhead sign supports; and

- pipe posts, pipe arms, post and arm flange plates, and handhole frames for monotube overhead sign supports.

Table 1
CVN Requirements for Non-Bridge Steel

Material	Thickness	Minimum CVN Toughness
ASTM A36, A53, A242, A500, A501, A709 Gr. 36, any other steel with minimum specified yield point below 40 ksi	up to 4"	15 ft.-lb. at 70°F
ASTM A572,[1] A588,[1] A633,[1] any other steel with minimum specified yield point between 40 and 65 ksi, inclusive	up to 2"	15 ft.-lb. at 70°F
	over 2" to 4", mechanically fastened	15 ft.-lb. at 70°F
	over 2" to 4", welded	20 ft.-lb. at 70°F
Any steel with minimum specified yield point over 65 ksi and under 90 ksi[2]	up to 2-1/2"	20 ft.-lb. at 50°F
	over 2-1/2" to 4", mechanically fastened	20 ft.-lb. at 50°F
	over 2-1/2" to 4", welded	25 ft.-lb. at 50°F

1. Reduce the testing temperature by 15°F for each 10-ksi increment or fraction thereof above 65 ksi if the yield point of the material given on the MTR exceeds 65 ksi.
2. Reduce the testing temperature by 15°F for each 10-ksi increment or fraction thereof above 85 ksi if the yield point of the material given on the MTR exceeds 85 ksi.

Use the (H) frequency of testing for material with minimum specified yield point up to 50 ksi. Use the (P) frequency of testing for material with minimum specified yield point over 50 ksi. Ensure steel is sampled and tested in accordance with ASTM A673.

2.1.3. **Other Components**.

2.1.3.1. **Miscellaneous Bridge Components**. Provide steel that meets ASTM A36, A709 Grade 36, or A500 Grade B for members such as steel bearing components not bid under other Items, steel diaphragms for use with concrete bridges, and armor and finger joints, unless otherwise shown on the plans.

2.1.3.2. **Shear Connectors and Anchors**. Provide cold-drawn bars for stud shear connectors, slab anchors, and anchors on armor and finger joints that meet the requirements of ASTM A108, Grade 1010, 1015, 1018, or 1020, either semi-killed or killed, and have the tensile properties given in Table 2 after drawing or finishing. Determine tensile properties in accordance with ASTM A370.

Table 2
Minimum Tensile Properties for Bar Stock

Tensile strength	60 ksi
Yield strength	50 ksi
Elongation	20% (2")
Reduction of area	50%

Provide certification from the manufacturer that the studs or anchors as delivered have the required material properties.

2.1.3.3. **Fasteners**. Provide high-strength bolts that meet ASTM A325 or A490 as shown on the plans. The Department may sample high-strength bolts, nuts, and washers for structural connections in accordance with Tex-719-I.

Follow the requirements of Item 447, "Structural Bolting," for tests, test reports, and supplemental requirements for high-strength bolts, nuts, and washers.

Use bolts that meet ASTM A307 and nuts that meet ASTM A563 when ASTM A325 or A490 bolts are not shown on the plans.

2.1.3.4. **Slip-Resistant Deck Plates**. Furnish steel for deck plates that meets ASTM A786 and one of A242, A588, or A709 Gr. 50W. State the type and trade name of material to be used on the shop drawings.

2.1.3.5. **Rail Posts**. Provide material for rail posts that meets ASTM A36 or ASTM A709 Grade 36 unless otherwise shown on the plans.

2.2. **Steel Forgings**. Provide steel forgings for pins, rollers, trunnions, or other forged parts that meet ASTM A668, Class C, D, F, or G, as shown on the plans. For pins 4 in. or smaller in diameter for non-railroad structures, material that meets ASTM A108, Grades 1016 to 1030, with a minimum yield strength of 36 ksi, may be used instead.

2.3. **Steel Castings**. Provide steel castings that meet ASTM A27, Grade 70-36.

2.4. **Iron Castings**. Provide iron castings that are true to pattern in form and dimensions; free from pouring faults, sponginess, cracks, blow holes, and other defects in positions affecting their strength and value for the service intended; and meet the standards shown in Table 3.

Table 3
Standards for Iron Castings

Casting Material	ASTM Standard	Grade or Class
Gray iron	A48	35B
Malleable iron	A47	32510
Ductile iron	A536	70-50-05

2.5. **Steel Tubing**. Provide steel tubing that meets ASTM A500, Grade B unless otherwise shown on the plans. Tubing that meets API Standard 5L, Grade X52 may be used if produced by a mill listed in the standard API specifications as authorized to produce pipe with the API monogram. Hydrostatic tests are not required for API 5L steel, and instead of an MTR, the manufacturer may furnish a certificate for each lot or shipment certifying the tubing meets the requirements of this Section.

2.6. **Pipe Rail**. "Pipe" includes special extruded and bent shapes. Provide pipe that is rolled, extruded, or cold-pressed from a round pipe or flat plate, and of the section shown on the plans.

Ensure the design of the cold press and dies results in a pipe of uniform section-free from die marks. Cut the pipe to the lengths required once it has been formed to the required section. Make the end cuts and notches at the angles to the axis of the pipe required to produce vertical end faces and plumb posts when required by the plans. Provide a neat and workmanlike finish when cutting and notching pipe.

2.7. **Aluminum**. Provide aluminum materials that meet the standards shown in Table 4 unless otherwise shown on the plans.

Table 4
Aluminum Standards

Material	ASTM Standard	Alloy-Temper
Castings	B108	A444.0-T4
Extrusions	B221	6061-T6
Sheet or plate	B209	6061-T6

When testing is required, cut test specimens from castings from the lower 14 in. of the tension flange, but not at the junction of the rib or base. Flatten the curved surfaces before machining. Provide standard test specimens in conformance with ASTM E8.

3. CONSTRUCTION

3.1. **Fabrication, Erection, and Painting**. Fabricate, weld, and erect structural metal in accordance with Item 441, "Steel Structures," Item 447, "Structural Bolting," Item 448, "Structural Field Welding," and the applicable AWS welding code. Paint in accordance with Item 446, "Field Cleaning and Painting Steel." Aluminum or galvanized steel members do not require painting unless otherwise shown on the plans.

3.2. **Galvanizing**. Galvanize fabricated steel items, steel castings, bolts, nuts, screws, washers, and other miscellaneous hardware in accordance with Item 445, "Galvanizing." Galvanizing is not required unless specified.

4. MEASUREMENT

This Item will be measured by the pound of structural metal furnished and placed in a complete structure not including the weight of erection bolts, paint, or weld metal.

This is a plans quantity measurement Item. The quantity to be paid is the quantity shown in the proposal unless modified by Article 9.2., "Plans Quantity Measurement." Additional measurements or calculations will be made if adjustments of quantities are required.

The maximum percent variance from the plans quantity will be as given in Table 5.

Table 5
Percent Variance

Quantity	Variance
Over 1,000,000 lb.	1/2%
100,000 through 1,000,000 lb.	1%
Under 100,000 lb.	1-1/2%

If the requests for increases in sizes or weights of members are approved, measurement will be made on the sizes or weights shown on the plans.

Castings, bearing plates, anchor bolts, drains, deck plates, armor and finger joints, and other metal for which no separate measurement is specified will be included in the total quantity of structural steel.

The weights of rolled materials (such as structural shapes and plate) will be computed on the basis of nominal weights and dimensions using measurements shown on the plans. Deductions will not be made for material that is removed for copes, clips, planing, or weld preparation. The weight of castings will be computed from the dimensions shown on the approved shop drawings. Shoes will be measured by the weights shown on the plans.

Weight of high-strength fasteners will be based on Table 6. Weight of other metal will be based on Table 7.

Splices will be measured as follows:

- No additional weight will be allowed for weld metal in a welded splice.
- Where a bolted splice is permitted as an alternate for a welded splice, measurement will be made on the basis of a welded splice.
- Where a bolted splice is required, the weight of the splice material, bolt heads, washers, and nuts will be measured with no deduction for holes.

Table 6
Pay Weight for High-Strength Fasteners, Pounds per Hundred Units

Diameter	Item		
	Bolt heads	Nuts	Washers
3/4"	15	19	4.8
7/8"	23	30	7.0
1"	32	43	9.4
1-1/8"	45	59	11
1-1/4"	64	79	14

Table 7
Pay Weight for Metals

Material	Weight (lb./cu. in.)
Steel	0.2836
Cast iron	0.2604
Wrought iron	0.2777

5. PAYMENT

The work performed and materials furnished in accordance with this Item and measured as provided under "Measurement" will be paid for at the unit price bid for "Structural Steel" of the type (Rolled Beam, Plate Girder, Tub Girder, Box Girder, Railroad Through-Girder, Railroad Deck-Girder, Miscellaneous Bridge, Miscellaneous Non-Bridge) specified. This price is full compensation for materials, fabrication, transportation, erection, paint, painting, galvanizing, equipment, tools, labor, and incidentals.

Item 447
Structural Bolting

1. DESCRIPTION

Furnish and install high-strength bolts for structural connections.

2. MATERIALS

2.1. **General**. Use the same supplier for bolts and nuts to ensure proper fit. Have the manufacturer or distributor perform rotational-capacity (R-C) tests in accordance with Tex-452-A on all bolt, nut, and washer assemblies. Test each combination of bolt production lot, nut lot, and washer lot as an assembly and assign an R-C lot number to each lot tested. Test 2 samples from each assigned R-C lot.

Furnish a manufacturer's certified test report (MCTR) or a distributor's certified test report (DCTR) for each R-C lot supplied. Include in the MCTR or DCTR:

- results of the R-C tests,
- R-C lot number,
- manufacturing location for assembly components,
- date and location of tests, and
- a statement that the materials represented by the test report conform to the specifications.

2.2. **Bolt Assemblies**. Provide bolts, nuts, and washers meeting the type, grade, and finish requirements in Table 1.

Use ASTM A325 or A490 Type 3 plain (uncoated) bolts for weathering steel as indicated and ASTM A325 Type 1 galvanized bolts for coated steel.

Provide bolts long enough for the installed bolt end to be flush with or outside the face of the nut.

Ensure galvanized nuts are lubricated with a lubricant containing a dye of a color that contrasts with the color of the galvanizing. Order ASTM A563 nuts with supplemental requirement S2 if they will be galvanized.

Table 1
ASTM Type, Finish, and Grade for Structural Bolts, Nuts, and Washers

	ASTM Designation	Bolt Type	Bolt Finish	ASTM A563 Nut Grade and Finish	ASTM F436 Washer Type and Finish
Heavy-Hex Bolts	A325	1	Galvanized	DH,[1] galvanized and lubricated	1; galvanized
	A325	3	Plain	C3 and DH3; plain	3; plain
	A490	3	Plain	DH3; plain	3; plain
Tension-Control Bolts			Galvanized	DH,[1] galvanized and lubricated	1; galvanized
		3	Plain	C3 and DH3; plain	3; plain
	F2280	3	Plain	DH3; plain	3; plain

1. ASTM A194 Heavy Hex Grade 2H nuts may be substituted.

2.3. **Washer-Type Indicating Devices**. Use compressible-washer-type direct tension indicators that meet ASTM F959 if allowed. Alternative washer-type indicating devices must be approved by Engineer. Provide detailed testing, installation, and inspection requirements prepared by the manufacturer.

2.4. **Storage**. Protect all bolts and nuts from dirt and moisture at the jobsite. Remove from protected storage only those bolts and nuts anticipated to be installed during a workday. Return unused fasteners to protected

storage at the end of the day. Do not clean fasteners of lubricant present in the as-delivered condition. Perform a field R-C test at the Contractor's expense in accordance with Tex-452-A on any lot of fasteners that shows signs of rust, dirt, or loss of lubrication as directed. Apply additional lubrication and rerun the R-C test before installing bolts if the fasteners fail the R-C test. Replace any fasteners that cannot be re-lubricated to pass the field R-C test. Tension control bolts may only be re-lubricated by the manufacturer.

2.5. **Sampling and Testing**. Sample high-strength bolts, nuts, and washers in accordance with Tex-719-I. Perform field R-C tests as directed in accordance with Tex-452-A. Perform installation verification tests required in Section 447.4.1., "Verification Testing."

2.6. **Fitup Bolts and Erection Pins**. Provide heavy-hex fitup bolts of the same diameter as the connection bolts. Do not use washer-type indicating devices for fitups. Do not reuse galvanized bolts or ASTM A490 bolts that have been used as fitup bolts. Provide a sufficient number of erection or drift pins, 1/32 in. larger than the bolt diameter.

2.7. **Paint Markers**. Provide white or yellow paint markers for marking bolts or nuts for wrench calibration, R-C Tests, and bolt installation.

3. EQUIPMENT

3.1. **Testing Equipment**. Provide a calibrated tension-measuring device (Skidmore-Wilhelm or equivalent), calibrated torque wrench, and other accessories necessary to perform the installation verification test and the R-C test and to calibrate hydraulic or electric torque wrenches.

3.2. **Wrenches**. Furnish either of the following types of wrenches.

3.2.1. **Air-Driven Impact Wrenches**. Furnish air-driven impact wrenches, air compressors, and related accessories of sufficient capacity to properly tension high-strength bolts. Impact wrenches should be of sufficient size and capacity to be able to tension fully a bolt in less than 15 sec. Repair or replace any wrenches that are unable to apply full tension to a bolt within this time.

3.2.2. **Calibrated Torque Wrenches**. Furnish calibrated hydraulic or electric torque wrench and related accessories capable of properly tensioning high-strength bolts. Calibrate the wrench to stall out or cut out completely when the bolt tension reaches 1.05 times the tension specified in Table 2. Calibrate the wrench by tensioning 3 bolts of each size in a calibrated tension-measuring device (Skidmore-Wilhelm or equivalent). Mark each bolt and verify the rotation from snug-tight when calibrating the wrench as specified in Section 447.4.5.3.1., "Turn-of-the-Nut Method." Calibrate the wrench at least once each working day or as directed. Recalibrate the wrench for changes in bolt diameter; changes in bolt length greater than 2 bolt diameters; significant differences in the surface condition of the bolts, threads, nuts, or washers; or changes in the equipment or hose length.

4. CONSTRUCTION

4.1. **Verification Testing**. Have each member of the bolting crew that will perform the actual work complete an acceptable pre-installation verification test in the presence of the Engineer. Only crewmembers that have demonstrated proper workmanship via verification testing may perform production bolting work.

4.1.1. **Air-Driven Impact Wrench**. Perform an installation verification test on 3 complete fastener assemblies of each combination of diameter, length, grade, and lot to be installed before beginning bolting. Follow the bolt-tensioning procedures in Section 447.4.5.3., "Tension Bolts." Use a calibrated tension-measuring device (Skidmore-Wilhelm or equivalent) to verify and demonstrate that the method for estimating the snug-tight condition and controlling the turns from snug-tight develops a tension greater than 1.05 times the tension specified in Table 2. The snug-tight condition is defined as the tightness that exists when the plies of the joint are in firm contact.

4.1.2. **Calibrated Torque Wrench**. Calibrate the wrench before beginning bolting in accordance with Section 447.3.2.2., "Calibrated Torque Wrenches." Use the bolting crew that will perform the actual work for the calibration and calibrate the wrench in the presence of the Engineer. Follow the bolt-tensioning procedures in Section 447.4.5.3., "Tension Bolts."

4.1.3. **Direct-Tension Indicator**. Use a calibrated tension-measuring device for compression-type indicators to verify the gap is not less than 0.015 in. or the job inspection gap specified by the manufacturer when tension in the bolt reaches 1.05 times the tension specified in Table 2.

Follow the manufacturer's instructions for pre-installation verification testing methods and frequency for alternative washer-type indicating devices deemed acceptable.

4.2. **Workmanship**. The Engineer will disqualify any crewmembers not adhering to proper installation methods during production work. Disqualified crew may not perform further bolting work until they complete an additional pre-installation verification test suitable to the Engineer.

4.3. **General**. Ensure all material within the grip of the bolt is steel. Do not allow any compressible material such as gaskets or insulation within the grip. Ensure the slope of parts in contact with the bolt head or nut does not exceed 1:20 with respect to a plane normal to the bolt axis. Prepare all joint surfaces, including those in contact with the bolt heads, nuts, or washers, so that the surfaces are free of dirt, loose rust, loose mill scale, burrs, and other matter that would prevent solid seating of the parts.

Replace any bolts and nuts installed for shipping purposes unless the shop drawings indicate the shop-installed bolts are to be fully tensioned in the shop. Do not tension bolts that have been installed snug-tight in the shop. Remove any bolts installed snug-tight in the shop and replace them with new bolts. Inspect and prepare the joint surfaces after removing shop-installed bolts that are not fully tensioned in the shop.

Provide a hardened washer for heavy-hex and tension-control bolts under either the nut or the bolt head, whichever is turned during tensioning. Install hardened washers under both the nut and bolt head of ASTM A490 bolts when the outer plies being fastened have a yield strength less than 40 ksi.

Install an ASTM F436 washer for direct tension indicators as follows:

- under the nut when the nut is turned and the direct tension indicator is located under the bolt head;
- between the nut and the direct tension indicator when the nut is turned and the direct tension indicator is located under the nut;
- under the bolt head when the bolt head is turned and the direct tension indicator is located under the nut; and
- between the bolt head and the direct tension indicator when the bolt head is turned and the direct tension indicator is located under the bolt head.

Tension all bolts to provide the minimum bolt tension values given in Table 2.

Erect steel in conformance with Item 441, "Steel Structures." Do not tack-weld any parts to eliminate fitup bolts or to hold parts together while bolting.

Remove lubricant from bolt assemblies on painted structures after tensioning and before coating the connections.

Re-tighten the nuts or tack weld the nuts to the bolts when bolts are used to temporarily support welded diaphragms after completing the welding operations if the diaphragms are over vehicular or pedestrian traffic.

Table 2
Bolt Tension

Nominal Bolt Size, in.	Minimum Tension (kips)	
	ASTM A325 Bolts	ASTM A490 Bolts
1/2	12	15
5/8	19	24
3/4	28	35
7/8	39	49
1	51	64
1-1/8	56	80
1-1/4	71	102
1-3/8	85	121
1-1/2	103	148

4.4. **Preparation of Faying Surfaces**. Perform blast cleaning or painting of faying surfaces in accordance with Item 441, "Steel Structures." Provide an SSPC-SP 10 blast cleaning before shipment for weathering steel. Do not wire-brush weathering steel faying surfaces.

Roughen galvanized faying surfaces by hand wire-brushing. Do not use power wire brushes to roughen galvanized faying surfaces.

4.5. **Bolt Installation**. Use the following procedure for bolt installation of a complete connection:

4.5.1. **Fair-Up Holes**. Use a minimum number of erection or drift pins, as directed, in the holes to "fair-up" all holes.

4.5.2. **Install Bolts**. Install bolts in all remaining holes of the connection. Do not use excessive force, which results in damage to the threads, to install the bolts. Increase the number of erection or drift pins as necessary to align the holes if force is required to install the bolts. Do not ream the holes unless approved. Ream the holes in accordance with Section 441.3.11.5., "Misfits," if approved. Remove the erection or drift pins and install bolts in these holes. Bring the connection to a full snug-tight condition by snugging systematically from the most rigid part of the connection to the free edges. The snug-tight condition is defined as the tightness that exists when the plies of the joint are in firm, full contact and all of the bolts in the joint have been tightened sufficiently to prevent the removal of the nuts without the use of a wrench. A snug-tight condition can usually be attained by a few impacts of an impact wrench or the full effort of a worker using an ordinary spud wrench as demonstrated in the installation verification test. As necessary, re-snug previously snugged bolts that may have relaxed as a result of the subsequent snugging of adjacent bolts to ensure all bolts are simultaneously snug-tight and the connection plates are in full contact.

Fully tighten a minimum number of bolts as directed until the plies are in full contact if snugging does not bring the plies of the joint into full contact. Mark these bolts as fitup bolts. Use a non-galvanized ASTM A325 bolt of the same diameter as a fitup bolt in connections requiring the use of galvanized ASTM A325 bolts. Re-snug all remaining bolts.

Do not use washer-type indicating devices to bring the connection to a snug-tight condition. Rather, install heavy-hex bolt assemblies in a sufficient number of holes (approximately 20%) to attain firm, full contact between plies. Remove the heavy-hex bolts and install the washer-type indicating device assemblies after firm contact is established by connections in surrounding bolt holes.

4.5.3. **Tension Bolts**. Loosen all fitup bolts after tensioning all the other bolts in the connection. Ungalvanized ASTM A325 bolts used as fitup bolts may be reused in a connection using this type of bolt. Replace all galvanized bolts and ASTM A490 bolts used as fitup bolts. Tension these remaining untensioned bolts in accordance with this paragraph. Ensure the element not turned by the wrench (bolt head or nut) does not rotate.

4.5.3.1. **Turn-of-the-Nut Method**. Match-mark the nuts and the protruding bolt ends after the bolts have been brought up to snug-tight condition and before final tensioning so that actual rotation can be determined.

Tension all bolts in the connection to their final tension by the amount of rotation specified in Table 3. Start final tensioning at the center or most rigid part of the connection and progress toward the free edges.

4.5.3.2. **Calibrated Wrench Method**. Use a calibrated hydraulic torque wrench to tension all bolts to 1.05 times the tension given in Table 1 after they have been brought to the snug-tight condition. Calibrate the wrench in accordance with Section 447.3.2.2., "Calibrated Torque Wrenches." Start tensioning at the most rigid part of the connection and proceed to the free edges. Return the wrench to re-tension previously tensioned bolts that may have relaxed as a result of the subsequent tensioning of adjacent bolts. Place marks on the socket at one-third points so the amount of rotation can be visually determined.

4.5.3.3. **Washer-Type Indicating Devices**.

4.5.3.3.1. **Compressible-Washer-Type Direct Tension Indicators**. Ensure the direct-tension indicator arches are oriented away from the work and that they bear against the hardened bearing surface. Confirm the appropriate feeler gage is 1) accepted in at least half the spaces between protrusions before tensioning, and 2) refused entry in at least half the spaces between protrusions after tensioning.

4.5.3.3.2. **Alternative Washer-Type Indicating Devices**. Follow the procedures prepared by the manufacturer and approved by the Engineer. Verify proper installation after tensioning.

4.5.4. **Bolt Reuse**. Do not reuse ASTM A490 or galvanized ASTM A325 bolts. Ungalvanized ASTM A325 bolts may be reused one time if the threads have not been damaged. Re-tensioning previously tensioned bolts loosened by the tensioning of adjacent bolts is not considered to be reuse.

Tension all bolts in a connection within 10 days of installation. Bolts not tensioned within 10 days of installation are subject to field R-C testing. Re-lubricate or replace any installed bolts that do not have sufficient lubrication as determined by the field R-C test.

Table 3
Nut Rotation from Snug-Tight Condition[1]

Bolt length (underside of head to end of bolt)	Disposition of Outer Face of Bolted Parts		
	Both faces normal to bolt axis	One face normal to bolt axis and other face sloped less than 1:20 (beveled washer not used)	Both faces sloped less than 1:20 from bolt axis (beveled washer not used)
Up to and including 4 bolt diameters	1/3 turn	1/2 turn	2/3 turn
Over 4 bolt diameters up to and including 8 diameters	1/2 turn	2/3 turn	5/6 turn
Over 8 bolt diameters up to and including 12 diameters[2]	2/3 turn	5/6 turn	1 turn

1. Nut rotation is relative regardless of the element (nut or bolt) being turned. The tolerance is –0°, +30° for bolts installed by 1/2 turn or less and –0°, +45° for bolts installed by 2/3 turn or more.
2. Determine the required rotation for bolt lengths greater than 12 diameters using the installation verification test in a simulated connection of solidly fitted steel.

5. MEASUREMENT AND PAYMENT

Installation and testing of bolts will not be paid for directly but will be subsidiary to the pertinent Items requiring the use of high-strength bolts.

When payment for the structure associated with the bolts is made under Item 442, "Metal for Structures," bolts, nuts, and washers will be paid for in accordance with Item 442, "Metal for Structures."

Item 448
Structural Field Welding

1. DESCRIPTION

Field-weld metal members using the shielded metal arc or flux cored arc welding processes.

2. MATERIALS

Provide electrodes for shielded metal arc welding (SMAW) conforming to the requirements of the latest edition of ANSI/AWS A5.1 or ANSI/AWS A5.5.

Provide electrodes for flux cored arc welding (FCAW) conforming to the requirements of the latest edition of ANSI/AWS A5.20 or ANSI/AWS A5.29.

Provide electrodes and flux-electrode combinations named on the Department's MPL. To request that a product be added to this list or to renew an expired approval, the Contractor or the consumable manufacturer must submit certified reports of all tests required by the applicable AWS A5 specification according to the applicable welding code to the Construction Division. For most structural steel construction, the applicable welding code is AASHTO/AWS D1.5 or ANSI/AWS D1.1. For reinforcing steel, the applicable code is ANSI/AWS D1.4. Tests must be conducted on electrodes of the same class, size, and brand and manufactured by the same process and with the same materials as the electrodes to be furnished. Resubmit electrodes or flux-electrode combinations every 12 months for renewal.

Table 1 shows the classes of electrodes required. Use electrodes with the type of current, with the polarity, and in the positions permitted by AWS A5.1 and A5.5 for SMAW. AWS A5.20 and A5.29 specifications govern for FCAW. Obtain approval for electrode use on steel not listed in Table 1.

Table 1
Classification of Electrodes Permitted

Type of Steel (ASTM Standards)	Electrode Specification	Process	Filler Metal Requirements
Steel piling Armor joints A500 A501	AWS A5.1 or A5.5	SMAW	E60XX E70XX or E70XX-X
	AWS A5.20 or A5.29	FCAW	E6XTX-X E7XTX-X (except -2, -3, -10, -GS)
A36 A572 Gr. 50 A588 A242 A709 Gr. 36. 50, or 50S	AWS A5.1 or A5.5	SMAW	E7016 E7018 E7028
	AWS A5.20 or A5.29	FCAW	E7XT-1 E7XT-5 E7XT-6 E7XT-8
Weathering steel A588 A242 A709 Gr. 50W	AWS A5.5	SMAW	E8018-W E8016-C3 E8018-C3 E8016-C1 E8018-C1 E8016-C2 E8018-C2
	AWS 5.29	FCAW	E8XT1-W E8XTX-Ni1 E8XTX-Ni2 E8XTX-Ni3
A709 Gr. HPS 70W	AWS A5.5	SMAW	E9018-M-H8R
Reinforcing steel Grade 40	AWS A5.1 or A5.5	SMAW	E70XX
Reinforcing steel Grade 60	AWS A5.5	SMAW	E90XX
Permanent metal deck forms	AWS A5.1 or A5.5	SMAW	E6010 E6011 E6013 E7018

Note—Low-hydrogen electrodes applicable to the lower strength base metal may be used in joints involving base metals of different yield points or strengths.

E7010 and E8010 electrodes may be used when welding the root passes of beam and girder splices if the requirements of Section 448.4.3.5.1., “High-Cellulose Electrodes for Root Passes,” are met.

Use electrodes meeting the diffusible hydrogen requirements for fracture-critical welding in AASHTO/AWS D1.5 when welding fracture-critical applications.

Use gas or gas mixtures that are welding grade and have a dew point of −40°F or lower for gas-shielded FCAW. Furnish certification to the Engineer that the gas or gas mixture is suitable for the intended application and will meet the dew point requirements.

3. EQUIPMENT

Provide electrode drying and storing ovens that can maintain the required temperatures specified in Section 448.4.3.1., “Electrode Condition.” Each oven must have a door that is sealed and can be latched. Each oven must have a small port that may be opened briefly to insert a thermometer or the oven must be equipped with a thermometer that allows for direct reading of temperature inside the oven without opening the oven. Provide equipment able to preheat and maintain the temperature of the base metal as required and as shown on the plans. Provide approved equipment (e.g., temperature indicator sticks or infrared thermometer) for checking preheat and interpass temperatures at all times while welding is in progress.

Provide welding equipment meeting the requirements of the approved welding procedure specifications (WPS), if required, and capable of making consistent high-quality welds.

4. CONSTRUCTION

4.1. **Procedure Qualification**. Use the proper classification and size of electrode, arc length, voltage, and amperage for the thickness of the material, type of groove, welding positions, and other circumstances of the work.

Submit WPSs for FCAW, qualified in accordance with AASHTO/AWS D1.5 for approval before any field welding on a project.

4.2. **Welder Qualification**. Provide Department certification papers for each welder and for each welding process to be used before welding, except for miscellaneous welds described in Section 448.4.2.1.1., "Miscellaneous Welding Applications." Certification is issued by the Department as described in Section 448.4.2.2., "Certified Steel Structures Welder."

4.2.1. **Miscellaneous Welding**. A qualified welder is an experienced welder who is capable of making welds of sound quality but does not have Department certification papers. The Engineer will check the welder's ability by conducting a jobsite test in accordance with Section 448.4.2.1.2., "Miscellaneous Weld Qualification Test," before welding begins. Furnish all materials and equipment necessary for this test.

4.2.1.1. **Miscellaneous Welding Applications**. A welder certified for structural or reinforcing steel or a qualified welder may make miscellaneous welds of the following types:

- splicing reinforcing steel to extend bars in the bottom of a drilled shaft;
- attaching chairs to the reinforcing steel cage of a drilled shaft;
- armor joints and their supports;
- screed rail and form hanger supports where permitted on steel units;
- reinforcing steel to R-bars for lateral stability between prestressed beams, spirals, or bands to reinforcing bars in drilled shaft cages;
- permanent metal deck forms;
- additional steel added in railing when slip-form construction is used; and
- other similar miscellaneous members that have no load-carrying capacity in the completed structure.

4.2.1.2. **Miscellaneous Weld Qualification Test**. A qualified welder must pass a jobsite Miscellaneous Weld Qualification Test before welding:

- Make a single-pass fillet weld of 1/4 in. maximum size in the vertical position approximately 2 in. long on 1/2-in. plate in the location shown in Figure 1. Use the same electrode proposed for the work.
- The Engineer will visually inspect the fillet weld for a reasonably uniform appearance and then rupture the weld as shown in Figure 2 with a force or by striking it with a hammer.
- The fractured surface of the weld will be inspected to ensure complete penetration into the root of the joint, complete fusion to the base metal, and no inclusion or porosity larger than 3/32 in. in its greatest dimension.

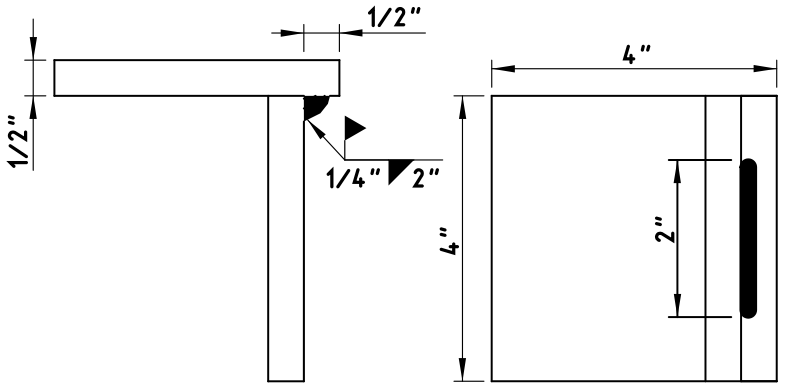

Figure 1
Miscellaneous Qualification—Fillet Weld Break Specimen

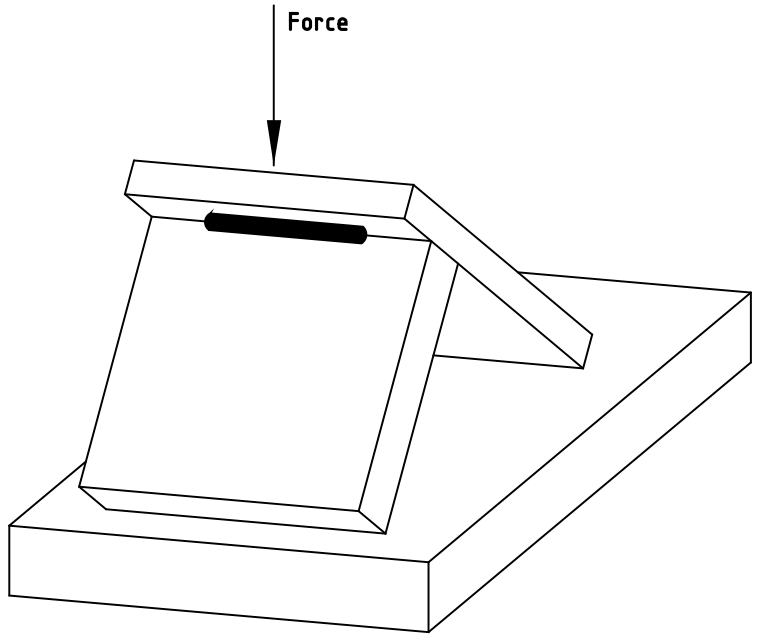

Figure 2
Miscellaneous Qualification—Method of Rupturing Specimen

A welder who fails the Miscellaneous Weld Qualification Test may take a retest under the following conditions:

- The retest occurs immediately and consists of 2 test welds as described above with both test specimens meeting all of the requirements.
- The retest occurs after 30 days if the welder provides evidence of further training or practice. In this case the test consists of a single test weld.

Qualification by the Miscellaneous Weld Qualification Test is effective immediately upon satisfactory completion of the test and remains in effect for the duration of a project.

4.2.2. **Certified Steel Structures Welder**. Before making non-miscellaneous welds on structural steel, a welder must pass the AASHTO/AWS D1.5 qualification test for groove welds for plates of unlimited thickness in the vertical (3G) and overhead (4G) positions with the following additional requirements:

- Use metal for test plates that meets Item 442, "Metal for Structures," with a minimum yield point of 36 ksi. The minimum width of test plate must be sufficient to accommodate the radiograph inspection of 5-1/4 continuous inches of the weld, not counting the ends of the weld.
- Use approved electrodes meeting the required class in accordance with Table 1 and, in the case of FCAW, in accordance with the approved WPS.
- Have a radiographic inspection performed on the weld on each test plate. Any porosity or fusion-type discontinuity with greatest dimension larger than 1/16 in. found in the weld will result in failure of the test. Discontinuities with greatest dimension less than 1/16 in. are acceptable provided the sum of their greatest dimensions does not exceed 3/8 in. in any inch of weld.
- Have 2 side-bend specimens prepared, tested, and inspected for each test plate.

The test must be administered by an approved laboratory and welding observed by laboratory personnel. Submit 2 copies of the certification issued by the laboratory, all accompanying test papers, and the radiographic films to the Bridge Division for review. The Bridge Division issues Department certification papers if the laboratory's certification is approved. A welder must also demonstrate to the Engineer a thorough knowledge of the required welding procedures together with the ability and desire to follow them and make welds of sound quality and good appearance. The certification issued by an approved laboratory is accepted for 1 mo. from the time of certification, during which time the welder may work on Department projects if the work is satisfactory. Certification papers issued by the Department remain in effect as long as the welder performs acceptable work as determined by the Bridge Division. The certification may be cancelled at any time if the welder's work is not acceptable.

For SMAW, a welder certified using EXX18 electrodes is qualified to weld with all approved SMAW electrodes up to E90XX to join metals with a maximum specified yield strength of 65 ksi.

4.3. **Welding Steel Structures**.

4.3.1. **Electrode Condition**.

4.3.1.1. **SMAW**. For electrodes with low-hydrogen coverings in conformance with AWS A5.1, dry to the manufacturer's written drying instructions or dry for at least 2 hours between 450°F and 500°F. For electrodes with low-hydrogen coverings conforming to AWS A5.5, dry for at least 1 hour between 700°F and 800°F or as specified by the electrode manufacturer. If using electrodes from a newly opened undamaged hermetically sealed container, drying is not required. Store electrodes in ovens held at a temperature of at least 250°F immediately after drying or removal from hermetically sealed container. Elapsed time permitted between removal of an electrode from the storage oven or hermetically sealed container and use of the electrode is given in Table 2. If the electrodes have the moisture resistance designator "R" and are being used on steel with minimum specified yield strength of 50 ksi or less, exposure time may be increased up to 9 hr.

Table 2
SMAW Electrode Exposure Limits

Electrode Type	Exposure Time (hr.)
E70	4
E80	2
E90	1

Leave electrodes in the holding oven for at least 4 hr. at 250°F before reusing if they are placed back in it before the times given in Table 2 have lapsed. The Engineer may reduce times allowed for use without re-drying in humid atmospheres. Do not redry electrodes more than once. Do not use electrodes with flux that has been wet, cracked, or otherwise damaged.

4.3.1.2. **FCAW**. Protect or store welding wire coils removed from the original package to keep their characteristics or welding properties intact. Do not use coils or portions of coils that are rusty.

4.3.1.3. **Special Applications**. Dry electrodes for fracture-critical applications or when welding steel not shown in Table 1 in accordance with the manufacturer's specifications and AASHTO/AWS D1.5.

4.3.2. **Environmental Conditions**. Do not weld when the air temperature is lower than 20°F; when surfaces are wet or exposed to rain, snow, or wind; or when operators are exposed to inclement conditions. Provide wind breaks to protect welding operations from winds greater than 5 mph.

4.3.3. **Assembly and Fitup**. Verify that ends of members to be welded are prepared in accordance with the welded joint detail specified. See Figures 3, 4, and 5 for proper end preparation and weld details of girder splices.

Bring the parts to be joined by fillet welds into as close contact as possible, not separated more than 3/16 in. Increase the leg of the fillet weld by the amount of the separation if the separation is 1/16 in. or more. Keep the separation between faying surfaces of lap joints and of butt joints landing on backing strips to no more than1/16 in.

Make suitable allowance for shrinkage, and never restrain the joint on both sides in any welding process.

Use the following fitup procedure for groove welds for butt joints:

- Align splices of beams and girders joined by groove welds with the center of gravity of both cross-sections coinciding or each flange vertically offset equally. Fit beams and girders with offset webs with the webs aligned and the flanges offset laterally. Make the joint with a smooth transition between offset surfaces and with a slope of no more than1:4 when flanges are offset or abutting parts differ in thickness or width by more than 1/8 in.
- Space members to provide a 3/16-in. root opening at the nearest point. At other points of the joint when the spacing provides up to a 7/16-in. opening, correction may be made by buildup up to 1/8 in. on each bevel nose. Rebevel openings exceeding 7/16 in. and move the parts to be joined closer together to bring the joint within the maximum buildup limits. Allow buildups to cool to the maximum preheat and interpass temperatures before welding the joint.
- Bring all members into correct alignment and hold them in position by acceptable clamps while welding.

Complete all butt splices before welding diaphragms or sway bracing in a particular section of a unit. Diaphragms and sway bracing may be welded in a unit behind the splice welding to provide stability except where such welding interferes with butt splice adjustments, such as at a drop-in segment of a continuous unit. Complete all splices before welding beams or girders to shoes.

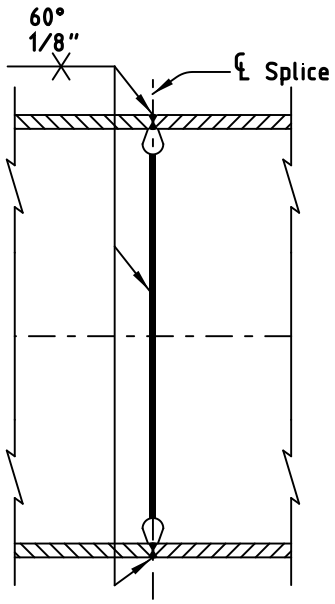

Figure 3
Girder Splice Details

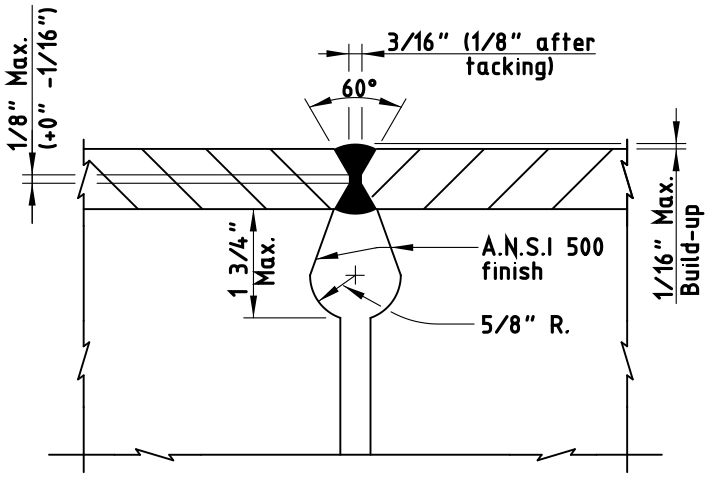

Figure 4
Girder Splice Details (Flange)

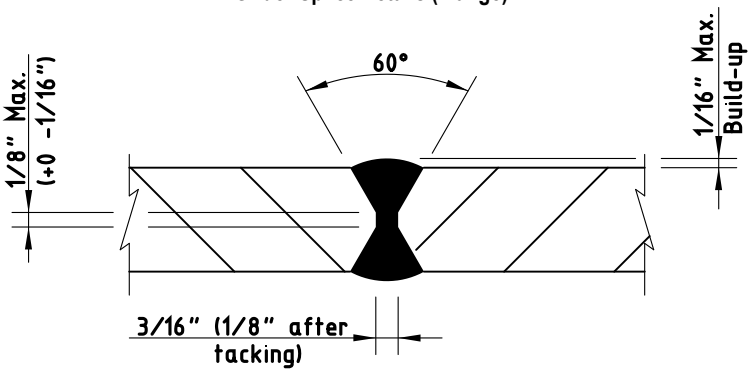

Figure 5
Girder Splice Details (Web)

4.3.4. **Preheat**. Preheat ahead of welding both groove and fillet welds (including tack welding) to the temperatures shown in Table 3. Keep preheat and interpass temperatures high enough to prevent cracks. The preheat

temperatures shown in Table 3 are minimums, and higher preheats may be necessary in highly restrained welds. Preheat the base metal when it is below the required temperature so that parts being welded are not cooler than the specified temperature within 3 in. of the point of welding.

Measure preheat temperature on the side opposite to which the heat is applied at points approximately 3 in. away from the joint.

Completely weld a joint before allowing it to cool below the specified temperature. Always deposit enough weld to prevent cracking before allowing a joint to cool. Do not allow preheat and interpass temperatures to exceed 400°F for thickness up to 1-1/2 in. and 450°F for greater thicknesses.

Table 3
Minimum Preheat and Interpass Temperature for Welding with Low-Hydrogen Electrodes

Thickest Part at Point of Welding	Temperature
Up to 3/4 in., inclusive	50°F
More than 3/4 in. up to 1-1/2 in., inclusive	70°F
More than 1-1/2 in. up to 2-1/2 in., inclusive	150°F
More than 2-1/2 in.	225°F

Preheat the material in accordance with Table 4 when E7010 or E8010 electrodes are used for tacking or temporary root pass.

Table 4
Minimum Preheat Temperature for Welding with E7010 or E8010 Electrodes

Thickest Part at Point of Welding	Temperature
1/2 in. and less	150°F
9/16 in. through 3/4 in.	200°F
13/16 in. through 1-1/2 in.	300°F
More than 1-1/2 in.	400°F

Use preheat and interpass temperatures for the thicker plate thickness when joining steels of different thickness.

Preheat base metal to at least 70°F when the base metal temperature is below 32°F. and maintain this minimum temperature during welding. Preheat base metal to 200°F before starting to weld if it is moist.

Preheat fracture-critical applications in accordance with AASHTO/AWS D1.5.

4.3.5. **Welding Practice**. Use an approved procedure to control shrinkage and distortion. Weld FCAW in accordance with an approved WPS. Weld as required by the Contract or erection drawings. Do not change the location or size of welds without approval. Do not make temporary welds for transportation, erection, or other purposes on main members except as shown on the plans or approved. Use a crayon, paint, or other approved method to mark each groove weld to identify the welder who performed the work.

Use the stringer-bead technique where possible for groove welds. Progress upward in vertical welding passes using a back-step sequence keeping the end of the low-hydrogen electrode contained within the molten metal and shield of flux unless the electrode manufacturer's specifications indicate otherwise.

Begin and terminate groove welds at the ends of a joint on extension bars. Make edge preparation and thickness of extension bars the same as that of the member being welded but extending at least 2 in. beyond the joint. Remove extension bars with a cutting torch or arc-air gouging, and grind the flange edges smooth after the weld is completed and cooled. Clean any defects exposed by the grinding, fill them with weld metal, and regrind them to a uniform finish. Grind so that grind marks are parallel to the flange, and avoid excess grinding of the parent metal. Clean and fuse tack welds thoroughly with the final weld. Remove defective, cracked, or broken tack welds.

Gouge, chip, or otherwise remove the root of the initial weld to sound metal for all groove welds, except those produced with the aid of backing or those on steel piling or armor joints, before welding is started on the second side. Clean the back side thoroughly before placing the backup pass. Fuse the weld metal

thoroughly with the backing, and use backing that is continuous for the full length of the weld. Make a continuous length of backing by welding shorter sections together only under the following conditions:

- All splices in the backing are complete joint penetration (CJP) groove welds made with the same controls as similar CJP groove welds in the structure.
- The welds are radiographed and examined as described in Section 448.4.3.7., "Radiographic Inspection," to ensure weld soundness.
- All welding and testing of the backing is complete before the backing is used to make the structural weld.

4.3.5.1. **High-Cellulose Electrodes for Root Passes**. E7010 and E8010 electrodes may be used when welding the root passes of beam and girder splices if the work is preheated in accordance with Table 4. Remove the E7010 or E8010 electrode pass completely by arc-air gouging, and replace it using a low-hydrogen electrode after the root passes are backed up.

4.3.5.2. **Welding Sequence**. Make beam and girder splices using the sequences shown in Figure 6. (Some members will require fewer or more passes than Figure 6 shows.) Alternate welds from flat to overhead to prevent heat buildup along bevel edge. Arrange the passes between the top and bottom flange to maintain balance and symmetry.

Place passes 1, 2, and 3 in the top flange, followed by passes 4, 5, and 6 in the bottom flange (see Figure 6) for rolled I-beams and built-up girders. Gouge out and replace passes 1 and 4, which always are placed in the overhead position. Next, place passes 7, 8, and 9 in the top flange, followed by passes 10, 11, and 12 in the bottom flange. Continue with placing passes 13–17 in the top flange, followed by passes 18–22 in the bottom flange. Continue to alternate welding between top and bottom flange with a maximum of 5 passes per flange until the flange splices are complete. Tack weld web after aligning girder webs with short tacks as required to obtain proper alignment. Place pass 23 and pass 24 on the web. Gouge out and replace pass 23. Finish web splice with pass 25.

Remove all slag for each layer, bead, and the crater area, and clean the weld and adjacent base metal before welding over previously deposited metal. Avoid arc strikes, and if they occur, grind resulting cracks and blemishes out to a smooth contour, checking them visually to ensure soundness.

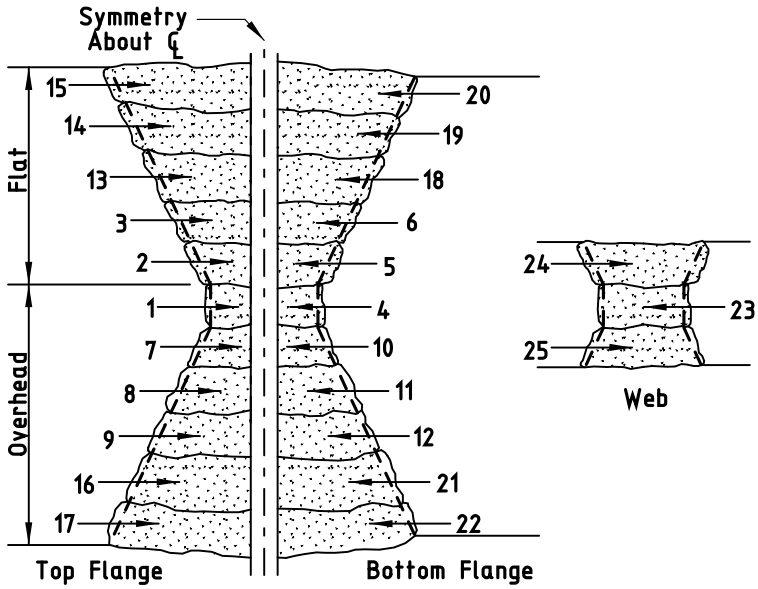

Figure 6
Welding Sequence for Splices for Material up to 50,000-psi Yield Strength.

Deviation from the above sequence of weld passes requires approval. Obtain approval from the Bridge Division for welding procedures and sequences for special connections.

4.3.5.3. **Electrode Size and Weld Layer Thickness**.

4.3.5.3.1. **SMAW**.

4.3.5.3.1.1. **Electrode Size**. Use electrodes with the following maximum size:

- 1/4 in. for all welds made in the flat position except root passes,
- 1/4 in. for horizontal fillet welds,
- 1/4 in. for root passes of fillet welds made in the flat position and of groove welds made in the flat position with backing and with a root opening of 1/4 in. or more,
- 5/32 in. for welds made with low-hydrogen electrodes in the vertical and overhead positions, and
- 3/16 in. for all other welds.

4.3.5.3.1.2. **Weld Size and Layer Thickness**. Make the root pass large enough to prevent cracking. Make layers subsequent to the root pass in fillet welds and all layers in groove welds of the following maximum thickness:

- 1/4 in. for root passes of groove welds;
- 1/8 in. for subsequent layers of welds made in the flat position; and
- 3/16 in. for subsequent layers of welds made in the vertical, overhead, and horizontal positions.

Make fillet welds passes using no larger than:

- 3/8 in. in the flat position,
- 5/16 in. in the horizontal or overhead positions, and
- 1/2 in. in the vertical position.

4.3.5.3.2. **FCAW**.

4.3.5.3.2.1. **Electrode Size**. Use electrodes with the following maximum size:

- 5/32 in. for the flat and horizontal positions,
- 3/32 in. for the vertical position, and
- 5/64 in. for the overhead position.

4.3.5.3.2.2. **Weld Size and Layer Thickness**. Make weld layers, except root and surface layers, no thicker than 1/4 in. Use a multiple-pass split-layer technique when the root opening of a groove weld is 1/2 in. or wider. Use the split-layer technique to make all multiple-pass welds when the width of the layer exceeds 5/8 in.

Ensure each pass has complete fusion with adjacent base metal and weld metal and that there is no overlap, excessive porosity, or undercutting.

Do not use FCAW with external gas shielding in a draft or wind. Furnish an approved shelter of material and shape to reduce wind velocity near the welding to a maximum of 5 mph.

Make fillet weld passes using no larger than:

- 1/2 in. in the flat position,
- 3/8 in. in the horizontal or overhead positions, and
- 5/16 in. in the vertical position.

4.3.6. **Weld Quality**. Provide welds that are sound throughout with no cracks in the weld metal or weld pass. Completely fuse the weld metal and the base metal and each subsequent pass. Keep welds free from overlap, and keep the base metal free from undercut more than 1/100 in. deep when the direction of undercut is transverse to the primary stress in the part that is undercut. Fill all craters to the full cross-section of the welds.

4.3.7. **Radiographic Inspection**. Conduct radiographic testing (RT) as required in the field at the expense of the Contractor by an agency or individual registered and licensed to perform industrial radiography. Follow all applicable rules and regulations for radiographic operations. Testing includes furnishing all materials, equipment, tools, labor, and incidentals necessary to perform the required testing. The Department may require further tests in accordance with Article 5.10., "Inspection," and may perform additional testing, including other methods of inspection.

Perform RT in accordance with AASHTO/AWS D1.5. The Engineer will examine and interpret the resulting radiographs in accordance with AASHTO/AWS D1.5. All radiographs become the property of the Department and remain with the Engineer.

Radiographically inspect the full flange width of all flange splices and the top and bottom 1/6 of the web at each splice for field-welds of splices in beams or girders. Radiographically retest repaired welds. Make necessary repairs before any further work is done. Additional RT required because of unacceptable welding or poor radiograph quality is at the Contractor's expense. RT of particular welds required by the plans is in addition to the RT required by this Item.

Meet the requirements specified in Section 441.3.2.5.1., "Radiographic Testing," for radiograph film quality.

4.3.8. **Corrections**. When welding is unsatisfactory or indicates inferior workmanship, the Engineer will require corrective measures and approve the subsequent corrections.

Use oxygen gouging or arc-air gouging when required to remove part of the weld or base metal. Back-gouge splices in beams and girders or cut out defective welds using arc-air gouging by a welder qualified to make beam and girder splices.

Slope the sides of the area to be welded enough to permit depositing new metal were corrections require depositing additional weld metal.

Use a smaller electrode than that used for the original weld where corrections require depositing additional weld metal. Clean surfaces thoroughly before re-welding.

Remove cracked welds completely and repair. Remove the weld metal for the length of the crack if crack length is less than half the length of the weld plus 2 in. beyond each end of the crack, and repair.

Restore the original conditions where work performed after making a deficient weld has made the weld inaccessible or has caused new conditions making the correction of the deficiency dangerous or ineffectual by removing welds, members, or both before making the necessary corrections; otherwise, compensate for the deficiency by performing additional work according to a revised and approved design.

Cut apart and re-weld improperly fitted or misaligned parts.

Straighten members distorted by the heat of welding using mechanical means or the carefully supervised application of a limited amount of localized heat. Do not let heated areas exceed 1,200°F as measured by temperature-indicating crayons or other approved methods for steel up to 65,000-psi yield strength. Do not let heated areas exceed 1,100°F for higher-strength steels. Keep parts to be heat-straightened substantially free of stress from external forces except when mechanical means are used with the application of heat. Before straightening, submit a straightening procedure to the Engineer for approval.

Correct defective or unsound welds either by removing and replacing the entire weld or as follows:

4.3.8.1. **Excessive Convexity**. Reduce to size by grinding off the excess weld metal, leaving a smooth profile.

4.3.8.2. **Shrinkage Cracks, Cracks in Base Metal, Craters, and Excessive Porosity**. Remove defective portions of base and weld metal down to sound metal, and replace with additional sound weld metal.

4.3.8.3. **Undercut, Undersize, and Excessive Concavity**. Clean and deposit additional weld metal.

4.3.8.4. **Overlap and Incomplete Fusion**. Remove and replace the defective portion of weld.

4.3.8.5. **Slag Inclusions**. Remove the parts of the weld containing slag, and replace them with sound weld metal.

4.3.8.6. **Removal of Base Metal during Welding**. Clean and form full size by depositing additional weld metal using stringer beads.

4.4. **Shear Stud Welding**. Weld shear studs to steel surfaces and perform preproduction and production tests as required in AASHTO/AWS D1.5.

4.5. **Welding Reinforcing Steel**. Splice reinforcing steel by welding only at locations shown on the plans.

4.5.1. **Base Metal**. Provide weldable reinforcing steel in conformance with Item 440, "Reinforcement for Concrete."

4.5.2. **Preheat and Interpass Temperature**. Minimum preheat and interpass temperatures are shown in Table 5. Preheat reinforcing steel when it is below the listed temperature for the size and carbon equivalency range of the bar being welded so that the cross-section of the bar is above the minimum temperature for at least 6 in. on each side of the joint. Allow bars to cool naturally to ambient temperature after welding is complete. Do not accelerate cooling.

Table 5
Minimum Preheat and Interpass Temperature for Reinforcing Steel

Carbon Equivalent Range (%)	Size of Reinforcing Bar (no.)	Temperature (°F)
Up to and including 0.40	Up to 11 inclusive	None
	14 and 18	50
0.41 through 0.45 inclusive	Up to 11 inclusive	None
	14 and 18	100
0.46 through 0.55 inclusive	Up to 6 inclusive	None
	7 to 11 inclusive	50
	14 and 18	200
Unknown	Up to 18 inclusive	500

Base the preheat and interpass temperatures for widening projects on the existing reinforcing steel and the requirements of Table 5.

4.5.3. **Joint Types**. Use butt splices for all No. 7 and larger bars. Use lap splices for No. 6 and smaller bars.

Make groove welds in lap splices at least 4 in. long, and weld them on each side of the lap joint as shown in Figure 7. For No. 5 and smaller bars, weld from one side of the lap when it is impractical to weld from both sides of the joint if approved by the Engineer, but in this case make the weld at least 6 in. long.

Make all butt splices in the flat position. Make all welds for butt splices, except horizontal welds on vertical bars, as shown in Figures 8 and 9. The back-up strip is required when access to the splice is from the top only. When bars can be rotated or access to the splice is available from 2 sides, the double bevel splice may be used, and this type weld requires gouging out the root pass similar to a flange splice on structural steel. The root pass may be made using E7010 or E8010 electrodes for all double beveled splices. Preheat the steel to 400°F, if using E7010 or E8010 electrodes, and then completely remove the root pass before welding the opposite side. Make horizontal splices on vertical bars as shown in Figure 10. Provide alignment strips as shown in Figures 9 and 10 to hold bars during welding operation. Trim alignment strips after welding is complete.

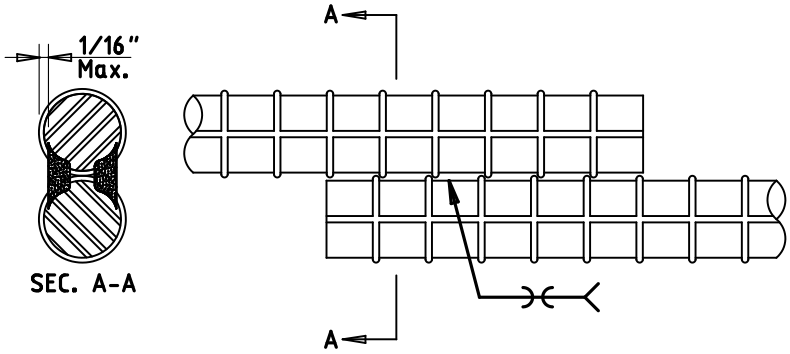

Figure 7
Direct Lap Joint with Bars in Contact

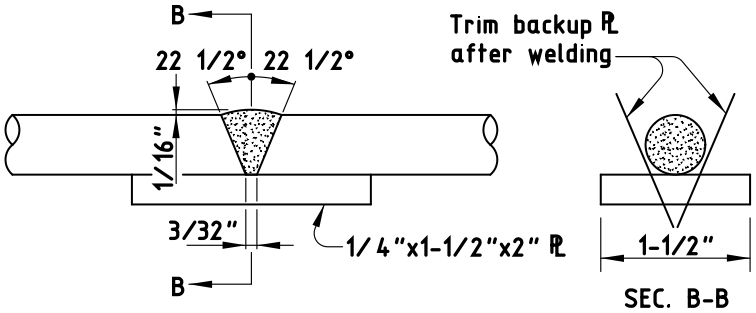

Figure 8
Single Bevel V-Groove Weld in Horizontal Position

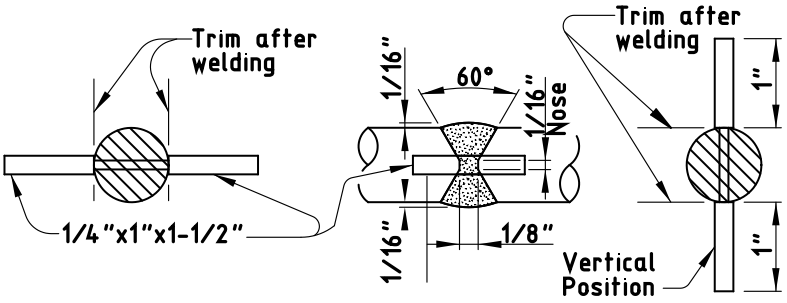

Figure 9
Double Bevel V-Groove Weld in Horizontal Position

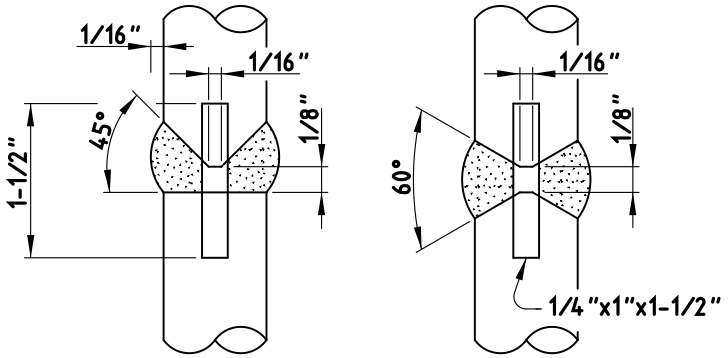

Figure 10
Double Bevel V-Groove Weld in Vertical Position

4.5.4. **Radiographic Inspection**. Radiograph welded butt splices at the expense of the Contractor when designated on the plans. Follow all applicable rules and regulations for radiographic operations. Ensure welds have no cracks and that the sum of the greatest dimensions of porosity and fusion-type defects do not exceed 1/10 of the nominal bar diameter.

The Engineer will examine and interpret the resulting radiographs, which become the property of the Department and remain with the Engineer.

5. MEASUREMENT AND PAYMENT

The work performed, materials furnished, equipment, labor, tools, and incidentals will not be measured or paid for directly but will be subsidiary to pertinent Items.

Item 449
Anchor Bolts

1. DESCRIPTION

Fabricate and install anchor bolts to be embedded in or attached to concrete. Anchor bolts are also referred as anchor rods.

2. MATERIALS

2.1. **Bolts and Nuts**. Provide bolts and nuts that meet the standards given in Table 1.

Table 1
Bolt and Nut Standards

Specified Anchor Bolt Category	Bolt Standards	Nut Standards
Mild steel	ASTM A307 Gr. A, F1554 Gr. 36, or A36	ASTM A563
Medium-strength, mild steel	ASTM F1554 Gr. 55 with supplementary requirement S1	ASTM A194 Gr. 2 or A563 Gr. D or better
High-strength steel	ASTM A325 or A449[1]	ASTM A194 or A563, heavy hex
Alloy steel	ASTM A193 Gr. B7 or F1554 Gr. 105	ASTM A194 Gr. 2H or A563 Gr. DH, heavy hex

1. If headed bolts are specified, ASTM A449 bolts must be heavy hex head.

Provide a mill test report or manufacturer's certification indicating the material conforms to these requirements. For alloy steel anchor bolts, provide a test report or certification attesting to the heat-treating process if applicable. If no specific bolt category is indicated on the plans, provide mild steel anchor bolts and nuts that meet the standards given in Table 1.

2.2. **Washers**. Use washers that meet ASTM F436.

2.3. **Threads**. Provide anchor bolts with rolled or cut threads of UNC or 8UN series in accordance with ASME B1.1. Anchor bolts 1-3/4 in. in diameter and larger must have UNC series threads. If bolts have rolled threads, ensure the diameter of the unthreaded portion of bolts with rolled threads is neither less than the minimum pitch diameter nor more than the maximum major diameter of the threads. If bolts have cut threads, ensure the diameter of the unthreaded portion is not less than the minimum major diameter of the threads. Ensure all threads for bolts and nuts have Class 2 fit tolerances in accordance with ASME B1.1.

3. CONSTRUCTION

3.1. **Fabrication**. Welded splicing of anchor bolts is not permitted.

Provide an anchorage device with each anchor bolt consisting of a standard bolt head, a threaded bolt with nuts, or, if shown on the plans, a 90° bend. Make the inside-bend diameter approximately 2 times the anchor bolt diameter, but at no point along the bend greater than 3 times the bolt diameter. Hot bending is permissible provided the temperature does not exceed 1,100°F.

If the anchor bolts will be installed in a template embedded in concrete, tack weld the anchorage nuts to the template in the shop. Perform this welding with appropriate jigs to ensure the anchor bolt is perpendicular to the template.

When embedded templates are not specified and nuts are welded to the end of anchor bolts for anchorage, weld only on the nut face at the unstressed end of the bolt. Ensure no welding, arc, or other potential notch-producing effects occur in the stressed portion of the bolt.

Shipping of the anchor bolt cage in its assembled condition is not required.

3.2. **Finish**. Galvanize in accordance with Item 445, "Galvanizing."

3.2.1. **Anchor Bolts Embedded in Concrete**. Galvanize the exposed end of the thread length plus a minimum of 6 in. unless otherwise shown on the plans.

3.2.2. **Anchor Bolts Extending Through Concrete**. Galvanize the complete length of the bolt.

3.2.3. **Nuts**. Galvanize exposed nuts. Galvanize the untapped blanks before cutting the threads.

3.2.4. **Washers**. Galvanize exposed washers.

3.3. **Installation**. Hold the anchor bolt and template assembly rigidly in position during concrete placement. Use wood templates or other positive means to ensure correct positioning of anchor bolts not requiring steel templates. Positioning devices may be tack welded to the steel templates but not to any portion of the anchor bolts.

3.3.1. **Anchor Bolt Thread Lubricant Coating**. Coat anchor bolt threads before installing nuts with an electrically conducting lubricant compound described in Section 449.3.3.2.1., "Definitions," for traffic signal poles, roadway illumination poles, high mast illumination poles, and overhead sign support structures. Coat anchor bolt threads for other structures with pipe joint compound or beeswax. After installing nuts, repair galvanizing damage on bolts, nuts, and washers in accordance with Section 445.3.5., "Repairs."

3.3.2. **Anchor Bolt Tightening Procedure**. Tighten anchor bolts for traffic signal poles, shoe base and concrete traffic barrier base roadway illumination poles, high mast illumination poles, and overhead sign support structures in accordance with this Section. This procedure covers the tightening of nuts on a double-nut anchor bolt system using anchor bolts with 55 ksi or 105 ksi minimum yield strength and UNC or 8UN thread series to secure structures to drilled shaft foundations.

3.3.2.1. **Definitions**. The following definitions apply to the anchor bolt tightening procedure:

- **Double-Nut Anchor Bolt System**. An anchor bolt with 2 nuts that sandwich the structure's base plate. The bottom nut is positioned under the base plate to level, support, and provide the reaction for the force applied by tightening the top nut positioned above the base plate.
- **Electrically Conducting Lubricant**. A compound commonly used in the electrical industry to coat threads of field-cut rigid metal conduit and suitable for exposure to weather.
- **Impact Tightening**. The tightening of nuts with a box end "slug" or "knocker" wrench and a sledgehammer. The wrench, matching the size of the nut to be tightened, is driven with the sledgehammer to rotate the nut.
- **Static Tightening**. The tightening of nuts with a "spud" wrench and a pipe or extension handle. The wrench, matching the size of the nut to be tightened, may be turned with more than one worker to rotate the nut.
- **Snug-Tight**. The condition when the nut is in full contact with the base plate. It may be assumed the full effort of a worker on a 12-in. wrench results in a snug-tight condition.
- **Turn-of-the-Nut Method**. The tightening of top nuts to snug-tight condition then establishing reference positions by marking one flat on each nut with a corresponding reference mark on the base plate at each bolt. Each nut is then turned to the prescribed rotation from the referenced snug-tight position.

3.3.2.2. **Anchor Bolt Tightening**. Perform the following procedure:

- Coat the threads of the anchor bolts with electrically conducting lubricant.

- Install the bottom nuts on the bolts, 1 on each bolt.
- Level the top template (using it as a guide) by adjusting the bottom nuts so the template rests on each nut and the distance between the top of the concrete shaft and the bottom surface of the bottom nut is approximately 1/2 in.
- Remove the template.
- Coat the bearing surfaces of the bottom nuts and washers with electrically conducting lubricant.
- Install bottom washers on bolts, 1 on each bolt.
- Erect and plumb the structure as specified. Adjust the bottom nuts so each is bearing equally on the washer or base plate. The truss for cantilever overhead sign support structures and the mast arm for traffic signal poles must be removed during anchor bolt tightening.
- With the plumbed structure supported by a crane, coat the bearing surfaces of the top nuts and washers with electrically conducting lubricant. Install 1 washer and 1 top nut on each bolt. Turn the top nuts onto the bolts so each is hand-tight against the washer or base plate.
- Turn each bottom nut to a snug-tight condition using a wrench.
- Verify the structure is still plumb and still supported by the crane. Begin turn-of-the-nut method by turning each top nut down to the same snug-tight condition. Prevent rotation of the bottom leveling nut during all top nut tightening. Establish reference marks for turn-of-the-nut method once snug-tight condition is achieved, and then tighten the top nuts by turning each nut 1/12 turn (1/2 of a nut flat) past snug-tight using either static or impact tightening. Turn each top nut an additional 1/12 turn until each nut has been tightened 1/6 total turn past snug-tight.

4. MEASUREMENT AND PAYMENT

Top or bottom templates, washers, lock washers, nuts, lock nuts, and other devices used for installing anchor bolts are considered part of the anchor bolt assembly. All work performed, materials furnished, equipment, labor, tools, and incidentals will not be measured or paid for directly but will be subsidiary to pertinent Items.

Item 556
Pipe Underdrains

1. DESCRIPTION

Install pipe underdrains.

2. MATERIALS

2.1. **Pipe**. Furnish the types and sizes of pipe specified on the plans. Use only one type of pipe for any underdrain system on the project. Use perforated pipe in areas to be drained, and use non-perforated pipe between the perforated pipe and the outfall.

2.1.1. **Type 1**. Corrugated steel pipe (CSP) conforming to any type specified in AASHTO M 36, fabricated from corrugated galvanized sheet.

2.1.2. **Type 2**. Corrugated aluminum pipe conforming to AASHTO M 196, Type I or IA, fabricated from corrugated sheet.

2.1.3. **Type 3**. Bituminous-coated corrugated steel pipe conforming to the requirements of Type 1 and uniformly coated inside and out with a minimum thickness of 0.05 in. of bituminous material meeting the requirements of Table 1 when tested in accordance with ASTM A849, Material Class A or Material Class PA.

Table 1
Requirements of Bituminous Material

Test	Requirements
Solubility, % by wt., in trichloroethylene	99.5 Min
Brittleness	Pass
Flow, in.	0.25 Max

2.1.4. **Type 4**. Bituminous-coated corrugated aluminum pipe conforming to the requirement of Type 2 and uniformly coated inside and out with a minimum thickness of 0.05 in. of bituminous material meeting the requirements of Table 1 when tested in accordance with ASTM A849, Material Class A or Material Class PA.

2.1.5. **Type 5**. Acrylonitrile-butadiene-styrene (ABS) pipe conforming to ASTM D2751, SDR-35. Perforations must meet the requirements of AASHTO M 278.

2.1.6. **Type 6**. Corrugated polyethylene plastic tubing conforming to AASHTO M 252.

2.1.7. **Type 7**. Corrugated polyvinyl chloride (PVC) pipe conforming to ASTM F949.

2.1.8. **Type 8**. Smooth-wall PVC pipe conforming to AASHTO M 278, Class PS 46.

2.1.9. **Type 9**. As shown on the plans.

2.2. **Filter Material**. Furnish hard, durable, and clean sand, gravel, crushed stone, or crushed shell meeting the gradation by percent weight specified in Table 2 unless otherwise shown on the plans. Filter material must be free of clay balls or other organic or deleterious matter as determined by Tex-413-A. Do not furnish crushed limestone unless shown on the plans. Use only one type of filter material for any underdrain system on a project.

Table 2
Percent Retained on Sieve (Tex-401-A)

Sieve Size	Type A	Type B	Type C	Type D
1-1/2"	–	–	0–10	
3/4"	–	0–10	20–40	
3/8"	–	15–35	–	–
#4	0–10	35–55	40–60	0–5
#8				0–20
#16				15–50
#20	35–65[1]	35–65[1]	35–65[1]	
#30				40–75
#50	75–100[1]	75–100[1]	75–100[1]	70–90
#100				90–100

1. Of the portion finer than No. 4 sieve.

Loss by decantation as determined by Tex-406-A must not exceed 1% of the material retained on a No. 4 sieve or 4% of the material passing a No. 4 sieve. Use Type B or Type C filter material around the underdrains unless otherwise shown on the plans. Do not place Type A or Type D filter material within 6 in. of perforations.

2.3. **Filter Fabric**. Meet DMS-6200, "Filter Fabric," Type 1.

2.4. **Riprap**. Provide concrete riprap in accordance with Item 432, "Riprap," when required.

3. CONSTRUCTION

Begin excavation of the trench at the outfall and proceed toward its upper end, following the lines and grades shown on the plans or as directed. Hold the minimum horizontal limits of excavation for filter material to the dimensions shown in Table 3 or as shown on the plans.

Table 3
Minimum Horizontal Limits of Excavation for Filler Material

Depth of Trench (ft.)	Distance Outside Neat Lines of Pipe Underdrains (ft.)
0 to 6	1.00
Over 6 to 10	1.50
Over 10 to 15	2.00
Over 15	2.50

Place filter fabric in the bottom and sides of the trench in areas to be drained before placing pipe or filter material, as shown in Figure 1. Provide enough width of fabric to overlap on top of the filter material. Center perforated pipe in the excavated ditch with the perforations below the horizontal axis. Join the pipe with appropriate couplers if required. Join plastic pipe in accordance with the manufacturer's recommendations. Do not use tarpaper strips. Obtain approval for pipe placement before placing filter material.

Place filter material at least 12 in. above the bottom of the pipe or as shown on the plans. Do not allow filter material to displace the pipe.

Lap filter fabric over the top of the filter material after placing pipe and filter material according to the manufacturer's recommendation or as shown on the plans.

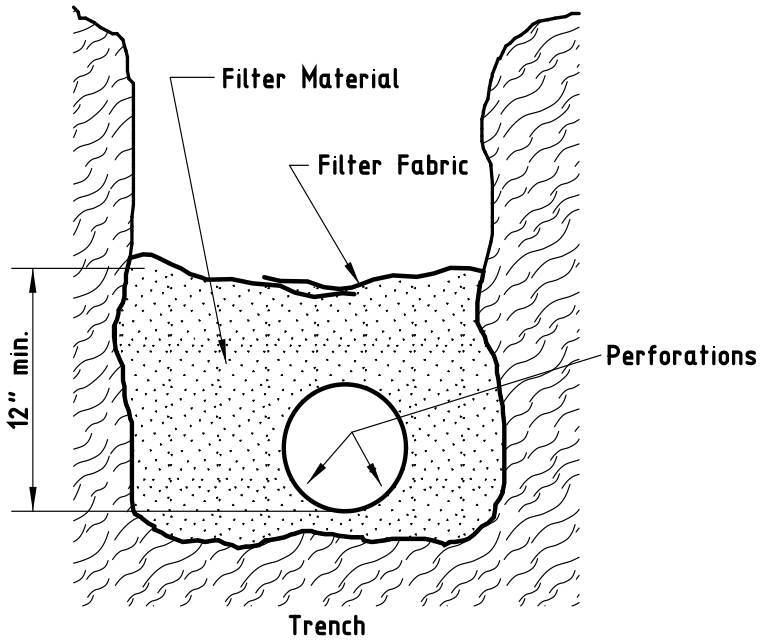

Figure 1
Installation Process

Install non-perforated pipe sections between the perforated pipe and the outfall. The sections of non-perforated pipe do not require filter fabric or filter material.

Place approved plugs in the upper ends of all pipe. Cover exposed outfall ends with 1/2-in. galvanized hardware cloth as directed. Provide Class B concrete riprap, when required, in accordance with Item 432, "Riprap," and details shown on the plans. Place the riprap to the contour and grade of the embankment slope. Cut the pipe to the slope of the riprap.

Backfill the remainder of the trench with suitable material in layers not to exceed 6 in.

4. MEASUREMENT

This Item will be measured by the foot along the top of the pipe and will include the length of elbows, Y's, T's, and other branches.

5. PAYMENT

The work performed and material furnished in accordance with this Item and measured as provided under "Measurement" will be paid for at the unit price bid for "Pipe Underdrains" of the pipe type and size specified. This price is full compensation for pipe, couplers, plugs, screens, filter material, filter fabric, riprap, excavation, backfill, equipment, labor, materials, tools, and incidentals.

Protection methods for excavations deeper than 5 ft. will be measured and paid for in accordance with Item 402, "Trench Excavation Protection."

Section 01110

SUMMARY OF WORK

PART 1 G E N E R A L

1.01 SECTION INCLUDES

A. Summary of the Work including work by the City, work sequence, future work, Contractor use of Premises, special conditions for substantial completion and City occupancy.

A.02 WORK COVERED BY CONTRACT DOCUMENTS

A. Work of the Contract is for the construction of the Missouri Kansas Texas (MKT) Trail Spur Connector and includes approximately 842 feet of 10-16 feet wide concrete bike trail, a 120 foot span pedestrian steel truss bridge (14 feet clear width), bridge abutments and approaches, steel sheet piling for retaining wall soil stabilization on southeast corner of bridge with pile cap, drainage culverts including headwalls, 4,752 square feet of concrete block retaining wall details, pedestrian railing, trail signing, and construction details to complete the bike trail project.

Construction access will occur from both ends of the project. Contractor is to obtain right of entry through public property, private property, or parkland (Stude Park). There are outstanding issues related to HCFCD to be resolved in their right of way before HCFCD approval is obtained The project requires a US Army Corp of Engineers (USACE) 408 provision and approval by USACE.

Due to the Access issues mentioned above, the project start date may be delayed as much as six months. Contractor pricing including total bid for the project must be valid for up to six months. Construction cannot start until approvals by HCFCD and USACE are obtained.

B. Contractor's Responsibilities:

1. Arrange and pay for Product delivery to the site.

2. Receive and unload Products at the site; jointly with the City, inspect for completeness or damage.

3. Handle, store, install, and finish Products.

4. Repair or replace damaged items.

1.03 WORK SEQUENCE

A. Construct the Work in Phases during the construction period, coordinate construction schedule and operations with the City: NO PHASES FOR THIS PROJECT

B. For projects with no Phases, do not disturb more than 50% of total project linear feet of disturbed right-of-way and easement until site restored in accordance with Section 01740 – Site Restoration.

C. Coordination of the Work: Refer to Section 01312 - Coordination and Meetings.

1.04 CONTRACTOR USE OF PREMISES

A. Comply with procedures for access to the site and Contractor's use of rights-of-way as specified in Section 01145 - Use of Premises.

B. Construction Operations: Limited to the City's rights-of-way provided by the City and areas shown or described in the Contract documents.

C. Utility Outages and Shutdown: Provide a minimum of 48 hours notice to the City and private utility companies (when applicable), excluding weekends and holidays, in advance of required utility shutdown. Coordinate all work as required.

1.05 STREET CUT ORDINANCE

A. Excavations on or under pavement in the City's right-of-way must have a permit. Comply with City of Houston, Texas Ordinance No. 2000-1115, an ordinance amending Chapter 40 of the Code of Ordinances, Houston, Texas, relating to excavating in the Public right-of-way.

B. Comply with the latest edition of street cut New Pavement Repair and Pavement Replacement details.

C. Quantities are included for street cut pavement repair and replacement in applicable Specification sections for Unit Price contracts.

D. Include payment for street cut pavement repair and replacement in lump sum bid for Stipulated Price contracts.

1.06 WARRANTY

A. Comply with warranty requirements in accordance with Document 00700 - General Conditions.

1.07 ADDITIONAL CONDITIONS FOR SUBSTANTIAL COMPLETION

A. In addition to requirements outlined in Document 00700 – General Conditions, for Contractor to be substantially complete with the Work and call for inspection by Project Manager to confirm, the following conditions must be met or completed:

1. All testing shall be completed and accepted by Project Manager.

B. No additional condition described in Paragraph 1.07 may be included in Contractor's punch list.

PART 2 P R O D U C T S - Not Used

PART 3 E X E C U T I O N - Not Used

END OF SECTION

Section 01292

SCHEDULE OF VALUES

PART 1 G E N E R A L

1.01 SECTION INCLUDES

A. Preparation and submittal of Schedule of Values for Stipulated Price Contracts or for Major Unit Price Work on Unit Price Contracts.

1.02 PREPARATION

A. For Stipulated Price Contracts, subdivide the Schedule of Values into logical portions of the Work, such as major work items or work in contiguous construction areas. Use Section 01325 - Construction Schedule as a guide to subdivision of work items. Directly correlate Items in the Schedule of Values with tasks in the Construction Schedule. Organize each portion using the Project Manual Table of Contents as an outline for listing value of the Work by Sections. A pro rata share of mobilization, Bonds, and insurance may be listed as separate items for each portion of the Work.

B. For Unit Price Contracts, items should include a proportional share of Contractor's overhead and profit so that total of all items will equal Contract Price.

C. For lump sum equipment items, where submittal of operation and maintenance data and testing are required, include separate items for equipment operation and maintenance data where:

1. submittal of maintenance data is valued at five percent of the lump sum amount for each equipment item and

2. submittal for testing and adjusting is valued at five percent of the lump sum amount for each equipment item.

Round off figures for each item listed to the nearest $100. Set the value of one item, when necessary, to make total of all values equal the Contract Price for Stipulated Price Contracts or the lump sum amount for Unit Price Work.

1.03 SUBMITTAL

A. Submit the Schedule of Values, in accordance with requirements of Section 01330 - Submittal Procedures, at least 10 days prior to processing of the first Certificate for Payment.

B Submit the Schedule of Values in an approved electronic spreadsheet file and an 81/2-inch by 11-inch print on white bond paper.

C. Revise Schedule of Values for items affected by Contract Modifications. After City Engineer has reviewed changes, resubmit at least 10 days prior to the next scheduled Certificate for Payment date.

PART 2 P R O D U C T S - Not Used

PART 3 E X E C U T I O N - Not Used

END OF SECTION

Section 01326

CONSTRUCTION SCHEDULE (BAR CHART)

PART 1 G E N E R A L

1.01 SECTION INCLUDES

A. Provide an initial Construction Schedule as required by this section for the Work. Do not start construction until Project Manager reviews the schedule.

1.02 FORM AND CONTENT OF INITIAL CONSTRUCTION SCHEDULE

A. Bar Chart:

1. Show major construction activities such as pipe laying, by traffic control phases or other approved key areas; tunnel construction, pavement removal, pavement replacement, pressure testing, chlorination, clean up and punch list as separate activities on the schedule.

2. Show week duration for each activity.

3. Show separate activities for each Shop Drawing and Product Data submittal critical to timely completion. Show submittal dates and dates Project Manager needs to provide approved submittals.

4. Provide separate horizontal bar for each activity. List start and finish date for each activity at left side of diagram.

5. Horizontal Time Scale: Identify first work day of each week.

6. Scale and Spacing: Notes must be legible. Allow space for notations and future revisions.

7. Order of Listings: Order bar chart listings by phases or other approved groups of activities that are contiguous. List activities in chronological order within each phase or group.

B. Narrative Description:

1. Submit narrative descriptions of anticipated work sequences as indicated by the sequence of activities presented in the schedule.

2. Discuss any activity that affects the public (such as phases of traffic control), interaction with specific forces of the City (such as valve operation, chlorination and testing) or other associated contractors.

1.03 PROGRESS REVISIONS

A. Submit progress revisions or necessary information to complete and process Payment Applications. When required, re-submittals for rejected revisions must be submitted and reviewed prior to the following month's processing of a Payment Application. The following month's Payment Application will not be processed until the re-submittal is reviewed and required progress revisions are received.

B. Provide a narrative report to describe:

1. Major changes in scope.

2. Revised projections in progress, completion, or changes in activity duration.

3. Other identifiable changes.

4. Problem areas, anticipated delays, and the impact on schedule.

5. Corrective action recommended and its effect.

6. Effect of changes on schedules or other contractors.

7. Product delivery lead times.

C. Include additional data with Bar Chart described in Paragraph 1.03A of this Section:

1. Show original dates for each activity in the approved initial progress schedule by narrow bar next to a wider bar for the current schedule.

2. Show date each activity actually started or finished when an event has occurred. Clearly identify actual dates in two right-most columns in left portion of an 11 by 17-inch chart.

3. Indicate the percentage progress to the date of submittal for each activity.

1.04 SUBMITTALS

A. Submit the initial progress schedule within 15 days after award of contract. Project Manager will review the schedule and return a reviewed copy within 21 days after receipt.

B. Cut-off dates for progress revisions may be as early as the 20th of the month to avoid delaying processing of Payment Applications. Use the cut-off date for the first approved revision for further revisions.

C. When required, re-submit within seven days after return of review copy.

D. Include connecting lines between bars in the schedule to indicate the sequence that activities will be accomplished. Connecting lines when the activity's start or finish is modified will identify impact of preceding or succeeding activities. Submit a minimum of six copies of the bar chart on 11 by 17-inch opaque reproductions. Project Manager will retain five copies and return the remaining copy.

PART 2 P R O D U C T S - Not Used

PART 3 E X E C U T I O N - Not Used

END OF SECTION

Section 01782

OPERATIONS AND MAINTENANCE DATA

PART 1 G E N E R A L

1.01 SECTION INCLUDES

A. Submittal requirements for equipment and facility Operations and Maintenance (O&M) Manuals

1.02 MEASUREMENT AND PAYMENT

A. Measurement for equipment O&M Manuals is on a lump sum basis equal to five percent of the individual equipment value contained in Schedule of Unit Prices or Schedule of Values. The lump sum amount may be included in the first Progress Payment following approval of the O&M Manuals by Project Manager.

1.03 SUBMITTALS

A. Conform to requirements of Section 01330 - Submittal Procedures. Submit a list of O&M Manuals and parts manuals for equipment to be incorporated into the Work.

B. Submit documents with 8-1/2 x 11-inch text pages, bound in 3-ring/D binders with durable plastic covers.

C. Print "OPERATION AND MAINTENANCE INSTRUCTIONS", Project name, and subject matter of binder on covers when multiple binders are required.

D. Subdivide contents with permanent page dividers, logically organized according to the Table of Contents, with tab titling clearly printed under reinforced laminated plastic tabs.

E. O&M Manual contents: Prepare a Table of Contents for each volume, with each Product or system description identified.

1. Part 1 - Directory: Listing of names, addresses, and telephone numbers of Design Consultant, Contractor, Subcontractors, and major equipment Suppliers.

2. Part 2 - O&M instructions arranged by system. For each category, identify names, addresses, and telephone numbers of Subcontractors and Suppliers and include the following:
   a. Significant design criteria.
   b. List of equipment.
   c. Parts list for each component.
   d. Operating instructions.
   e. Maintenance instructions for equipment and systems.
   f. Maintenance instructions for special finishes, including recommended cleaning methods and materials and special precautions identifying detrimental agents.

3. Part 3 - Project documents and certificates including:
   a. Shop Drawings and relevant data.
   b. Air and water balance reports.
   c. Certificates.
   d. Photocopies of warranties.

F. Submit two copies of O&M Manuals and parts manuals, for review, within one month prior to placing the equipment or facility in service.

G. Submit one copy of completed volumes in final form 10 days prior to final inspection. One copy with Project Manager comments will be returned after final inspection. Revise content of documents based on Project Manager's comments prior to final submittal.

H. Revise and resubmit three final volumes within 10 days after final inspection.

1.04 EQUIPMENT O&M DATA

A. Furnish O&M Manuals, prepared by manufacturers for all equipment. Manuals must contain, as a minimum, the following:

1. Equipment functions, normal operating characteristics, and limiting conditions.

2. Assembly, Installation, alignment, adjustment, and checking instructions.

3. Operating instructions for start-up, normal operation, regulation and control, normal shutdown, and emergency shutdown.

4. Detailed drawings showing the location of each maintainable part and lubrication point with detailed instructions on disassembly and reassembly of the equipment.

5. Troubleshooting guide.

6. Spare parts list, predicted life of parts subject to wear, lists of spare parts recommended to be on hand for both initial start-up and for normal operating inventory, and local or nearest source of spare parts availability.

7. Outline, cross-section, and assembly drawings with engineering data and wiring diagrams.

8. Test data and performance curves.

B. Furnish parts manuals for all equipment, prepared by the equipment manufacturer, which contain, as a minimum, the following:

1. Detailed drawings giving the location of each maintainable part.

2. Spare parts list with predicted life of parts subject to wear, lists of spare parts recommended on hand for both initial start-up and for normal operating inventory, and local or nearest source of spare parts availability.

PART 2 P R O D U C T S - Not Used

PART 3 E X E C U T I O N - Not Used

END OF SECTION

FED. RD. DIV. NO.	PROJECT NO.		SHEET NO.
6	TCSP 2015 (443)		1
STATE	STATE DIST.	COUNTY	
TEXAS	HOU	HARRIS	
CONT.	SECT.	JOB	HIGHWAY NO.
0912	72	299	VA

CITY OF HOUSTON

DEPARTMENT OF PUBLIC WORKS AND ENGINEERING
ENGINEERING AND CONSTRUCTION DIVISION

MISSOURI KANSAS TEXAS TRAIL SPUR CONNECTOR

PROJECT NO: TCSP 2015 (443)
WBS NO. N-320420-030A-3
CSJ 0912-72-299

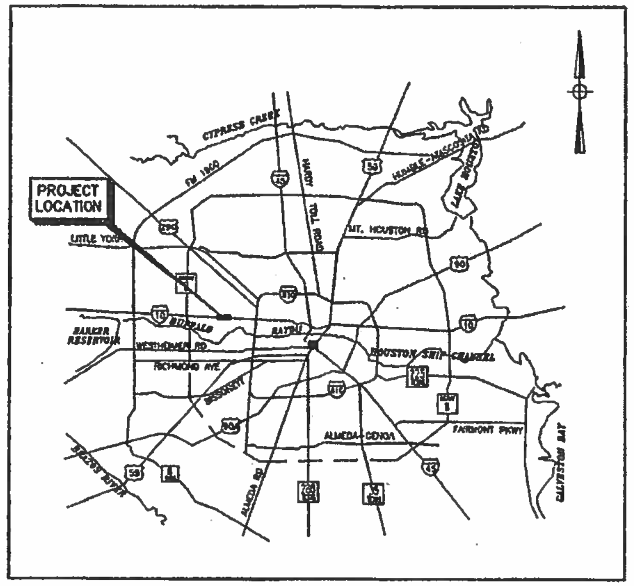

LOCATION MAP
NTS

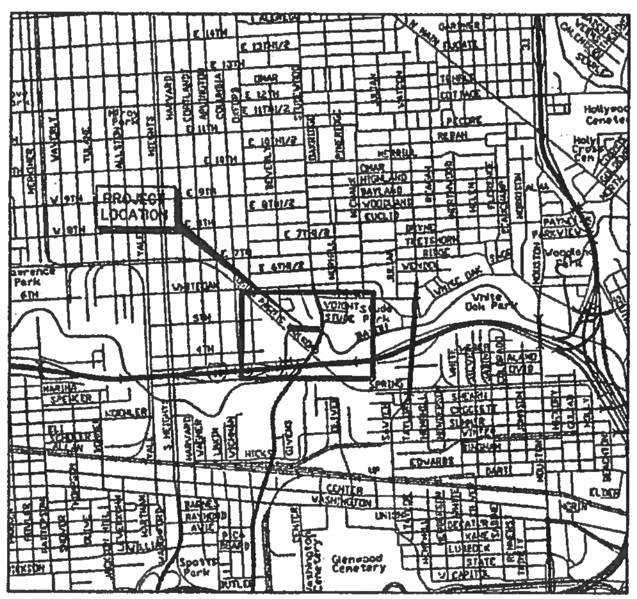

VICINITY MAP
NTS

KEY MAP No. 493A, 493E
GIMS MAP No. 5358c, 5358d
COUNCIL DISTRICTS 0053

TEXAS DEPARTMENT OF LICENSING AND REGULATION ARCHITECTURAL BARRIERS PROJECT REGISTRATION NUMBER: EABPRJB5822486
REGISTERED ACCESSIBILITY SPECIALIST (RAS) INSPECTION REQUIRED TDLR NO. EABPRJB5822486

NOTICE:
CONTRACTOR TO NOTIFY CITY OF HOUSTON 48 HOURS BEFORE STARTING CONSTRUCTION

DBE 5 %

MAYOR
ANNISE D. PARKER

CONTROLLER
RONALD C. GREEN

DISTRICT COUNCIL MEMBERS

BRENDA STARDIG, DISTRICT A
JERRY DAVIS, DISTRICT B
ELLEN COHEN, DISTRICT C
DWIGHT BOYKINS, DISTRICT D
DAVE MARTIN, DISTRICT E
RICHARD NGUYEN, DISTRICT F
OLIVER PENNINGTON, DISTRICT G
EDWARD GONZALEZ, DISTRICT H
ROBERT GALLEGOS, DISTRICT I
MIKE LASTER, DISTRICT J
LARRY GREEN, DISTRICT K

COUNCIL MEMBERS AT-LARGE

STEPHEN C. COSTELLO, POSITION 1
DAVID W. ROBINSON, POSITION 2
MICHAEL KUBOSH, POSITION 3
C.O. "BRAD" BRADFORD, POSITION 4
JACK CHRISTIE, POSITION 5

KLOTZ ASSOCIATES, INC. PROJECT No. 0101.047.001

© 2015 ® Texas Department of Transportation

SUBMITTED FOR LETTING 9/8/2015
APPROVED FOR LETTING 9/8/2015
PROJECT MANAGER
For DISTRICT ENGINEER

RECOMMENDED FOR LETTING 9-2-15
CITY OF HOUSTON

klotz associates
1160 Dairy Ashford, Suite 500
Houston, Texas 77079
T 281.589.7257 F 281.589.7309
houston.office@klotz.com
Texas PE Firm Reg. # F-929

STATE OF TEXAS
BRADLEY R. BROWN
58642
REGISTERED PROFESSIONAL ENGINEER
8/21/2015

SURVEYED BY: KUO & ASSOCIATES, INC.
FB No.

WATER N/A	TRAFFIC AND TRANSPORTATION N/A
WASTEWATER N/A	SIGNALS N/A
STORMWATER Ellen S. Maas 11/6/15	MANAGING ENGINEER/ASSISTANT DIRECTOR
STREET & BRIDGE N/A	PARK-FORESTRY DEPT
CONSTRUCTION 11/6/2015	SPONSOR DIV / DEPT
CITY ENGINEER DATE	FOR CITY OF HOUSTON USE ONLY
DIRECTOR OF PUBLIC WORKS AND ENGINEERING DATE	
SHEET NO 1 OF 44 SHEETS	

Addendum #1

REV	DESCRIPTION	BY	DATE
1	ADDENDUM NO. 1	JBP	12/3/15

SHEET NO. DESCRIPTION

A. GENERAL
1. TITLE SHEET
2. INDEX SHEET
3. PROJECT LAYOUT
4. HARRIS COUNTY ENGINEERING DEPARTMENT EXPRESS REVIEW SHEET
5. TYPICAL SECTIONS
6. GENERAL NOTES (SHEET 1 OF 2)
7. GENERAL NOTES (SHEET 2 OF 2)
8. SUMMARY OF QUANTITIES
9. SUMMARY OF SMALL SIGNS

B. ROADWAY DETAILS
10. SURVEY CONTROL MAP
11. MKT TRAIL SPUR CONNECTOR PLAN AND PROFILE STA 0+08.12 TO STA 3+00.00
12. MKT TRAIL SPUR CONNECTOR PLAN AND PROFILE STA 3+00.00 TO STA 6+00.00
13. MKT TRAIL SPUR CONNECTOR PLAN AND PROFILE STA 6+00.00 TO END
14. CROSS SECTIONS STA. 0+00.00 TO STA. 2+50.00
15. CROSS SECTIONS STA. 3+00.00 TO STA. 6+00.00
16. CROSS SECTIONS STA. 6+50.00 TO END
17. PAVEMENT PLAN DETAIL
18. CONCRETE PAVEMENT DETAILS

C. WALL DETAILS
19. *CONCRETE BLOCK RETAINING WALL - RW(CB)
20. CONCRETE BLOCK RETAINING WALL UNDERDRAIN DETAILS
21. CONCRETE CHANNEL LINING DETAILS
21A. CONCRETE CHANNEL LINING DETAILS (2)
21B. CONCRETE CHANNEL LINING DETAILS (3)

D. DRAINAGE DETAILS
22. CULVERT DRAINAGE AREA MAP AND DESIGN CALCULATIONS
23. CULVERT LAYOUT
24. *EXCAVATION AND BACKFILL DIAGRAM
25. *CONCRETE HEADWALLS CH-FW-0

E. BRIDGES
26. STUDE PARK SPUR BRIDGE LAYOUT
27. STUDE PARK SPUR BRIDGE ABUTMENT DETAILS
28. STUDE PARK SPUR BEARING SEAT DETAILS
29. STUDE PARK SPUR APPROACH SLAB DETAILS
30. *PEDESTRIAN RAIL - TYPE PR1

F. TRAFFIC ITEMS
31. SIGN LAYOUT
32. BICYCLE LANE PAVEMENT MARKINGS
33. GENERAL NOTES AND GROUND SIGN MOUNTING

G. ENVIRONMENTAL
34. STORM WATER POLLUTION PREVENTION PLAN
35. STORM WATER POLLUTION PREVENTION PLAN DETAILS SHEET 1 OF 2
36. STORM WATER POLLUTION PREVENTION PLAN DETAILS SHEET 2 OF 2
37. ENVIRONMENTAL PERMITS ISSUES AND COMMITMENTS - SHEET 1 OF 3 (HOUSTON DISTRICT)
38. ENVIRONMENTAL PERMITS ISSUES AND COMMITMENTS - SHEET 2 OF 3 (HOUSTON DISTRICT)
39. ENVIRONMENTAL PERMITS ISSUES AND COMMITMENTS - SHEET 3 OF 3 (HOUSTON DISTRICT)
40. FERTILIZER, SEED, SOD, STRAW, COMPOST AND WATER (HOUSTON DISTRICT)

H. MISCELLANEOUS ITEMS
41. CITY OF HOUSTON PROJECT IDENTIFICATION SIGNS
42. BORING LOGS (SHEET 1 OF 2)
43. BORING LOGS (SHEET 2 OF 2)
44. USACOE LETTER

*THE STANDARD SHEETS SPECIFICALLY IDENTIFIED ABOVE HAVE BEEN SELECTED BY ME OR UNDER MY RESPONSIBLE SUPERVISION AS BEING APPLICABLE TO THIS PROJECT.

12/3/15

BRADLEY R. BROWN, PE DATE

CONSTRUCTION IN HARRIS COUNTY FLOOD CONTROL DISTRICT RIGHT-OF-WAY

AN HCFCD RIGHT-OF-WAY NOTIFICATION (PERMIT) AND HCFCD 48-HR PRE-CONSTRUCTION NOTICE ARE REQUIRED PRIOR TO ENTERING OR WORKING WITHIN HARRIS COUNTY FLOOD CONROL DISTRICT RIGHT-OF-WAY. BOTH THE HCFCD RIGHT-OF-WAY NOTIFICATION AND 48-HOUR NOTICE MUST BE PROVIDED TO HCFCD AT DCIS@HCFCD.ORG. SITE PLANS MUST BE APPROVED PRIOR TO OBTAINING THE REQUIRED HCFCD RIGHT-OF-WAY NOTIFICATION. BE ADVISED THAT THE HCFCD RIGHT-OF-WAY NOTIFICATION IS SEPARATE FROM THE SITE DEVELOPMENT PERMIT PACKAGE. FOR ADDITIONAL INFORMATION, PLEASE VISIT **HTTP://HCPID.ORG/PERMITS/DOCS/ROW_NOTIFICATION_FOR_ROW_CONST_APP.PDF** OR CONTACT THE PUBLIC REVIEW INSPECTION DEPARTMENT @ (713-956-3033).

BENCHMARK:

FLOODPLAIN REFERENCE MARK NUMBER 050025 IS A TXDOT DISK ON BRIDGE AT HEIGHTS BOULEVARD AND WHITE OAK BAYOU ABOUT 0.1 MILES SOUTH OF IH 10 LOCATED ON UPSTREAM SIDE OF BRIDGE IN KEYMAP 493E IN THE WHITE OAK WATERSHED NEAR STREAM E100-00-00.

ELEV. 40.047 FEET NAVD 1988, CORS '96 (GEOID '12A)

SEE SURVEY CONTROL MAP SHEET FOR TEMPORARY BENCHMARK INFORMATION.

TO ARRANGE FOR LINES TO BE TURNED OFF OR MOVED, CALL CENTERPOINT ENERGY AT 713-207-2222

NOTICE:

FOR YOUR SAFETY, YOU ARE REQUIRED BY TEXAS LAW TO CALL 811 AT LEAST 48 HOURS BEFORE YOU DIG SO THAT UNDERGROUND LINES CAN BE MARKED. THIS VERIFICATION DOES NOT FULFILL YOUR OBLIGATION TO CALL 811.

VERIFICATION OF PRIVATE UTILITY LINES

Date:

CenterPoint Energy/Natural Gas Facilities Verification ONLY.
(This signature verifies that you have shown CNP Natural Gas lines correctly – not to be used for conflict verification.)
(Gas service lines are not shown.) Signature valid for six months.

Date:

CenterPoint Energy/UNDERGROUND Electrical Facilities Verification ONLY.
(This signature verifies existing underground facilities – not to be used for conflict verification.) Signature valid for six months.

Date:

Approved for AT&T Texas/SWBT underground conduit facilities only.
Signature valid for one year.

klotz associates
1160 Dairy Ashford, Suite 500
Houston, Texas 77079
T 281.589.7257 F 281.589.7309
houston.office@klotz.com
Texas PE Firm Reg. # F-929

STATE OF TEXAS
BRADLEY R. BROWN
58842
REGISTERED PROFESSIONAL ENGINEER

12/3/15

SURVEYED BY: KUO FB No. X-XXXX

CITY OF HOUSTON
DEPARTMENT OF PUBLIC WORKS AND ENGINEERING

MISSOURI KANSAS TEXAS TRAIL SPUR CONNECTOR

INDEX SHEET

WBS NUMBER
N-320420-030A-3
DRAWING SCALE
NTS
CITY OF HOUSTON PM
RAYMOND FONG
SHEET No. 2 OF 44

\\Ka-file1\vol4\0101.047.001\09.00 Bidding Phase\09.03 Addenda Distribution Records\Revised Sheets\0001 INDEX SHEET.dwg Dec 03 2015

REV	DESCRIPTION	BY	DATE
1	ADDENDUM NO. 1	JBP	12/3/2015

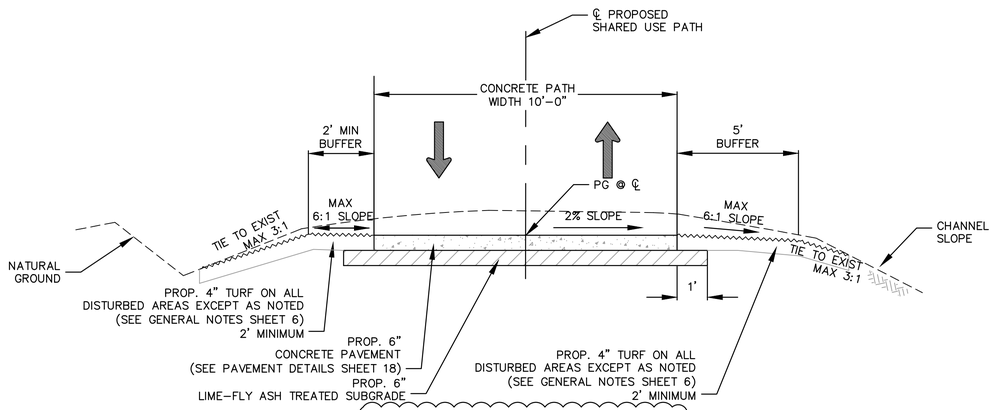

TYPICAL SECTION – NO RETAINING WALLS
STA 00+08.12 TO STA 00+34.00
STA 07+90.00 TO STA 08+52.15

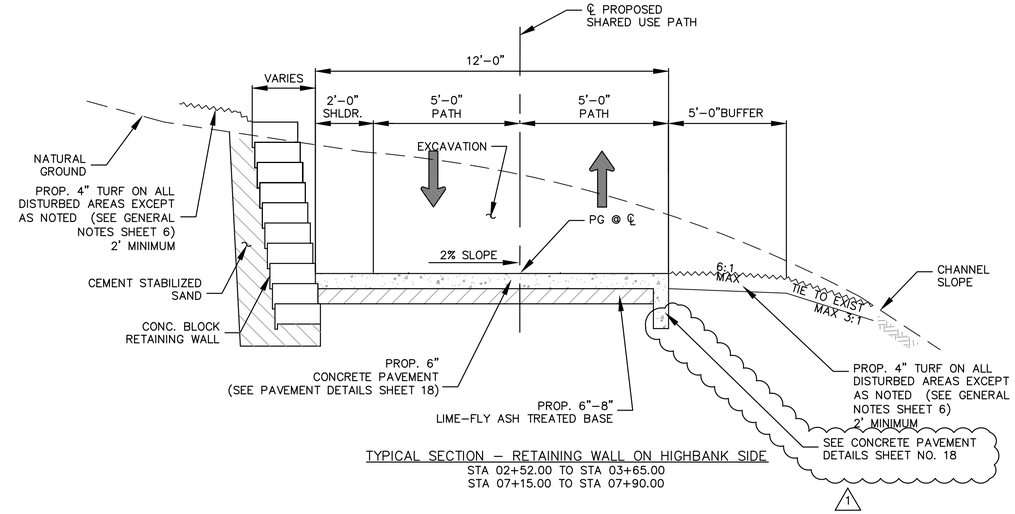

TYPICAL SECTION – RETAINING WALL ON HIGHBANK SIDE
STA 02+52.00 TO STA 03+65.00
STA 07+15.00 TO STA 07+90.00

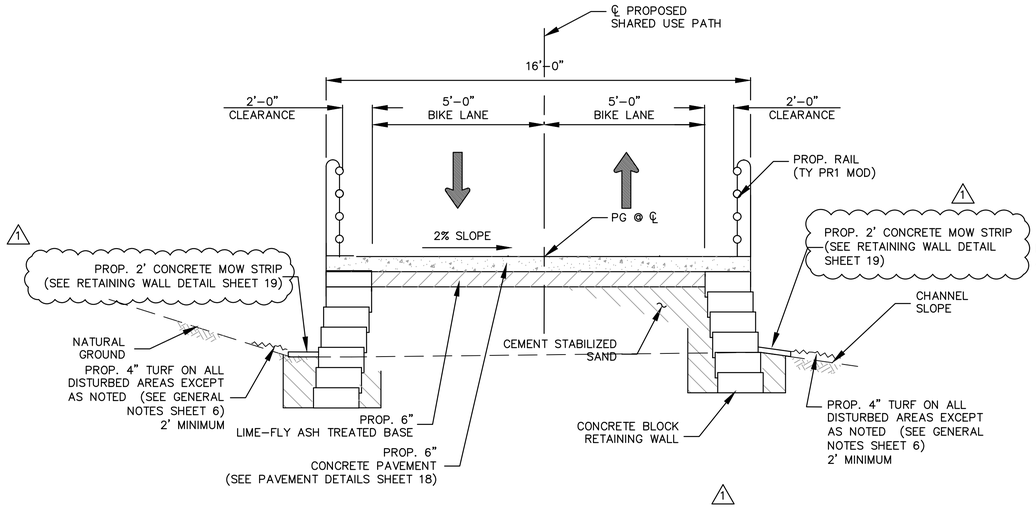

TYPICAL SECTION – PEDESTRIAN RAIL BOTH SIDES
STA 00+34.00 TO STA 0+70.00
STA 04+25.00 TO STA 4+30.00
STA 05+50 TO STA 05+60.00

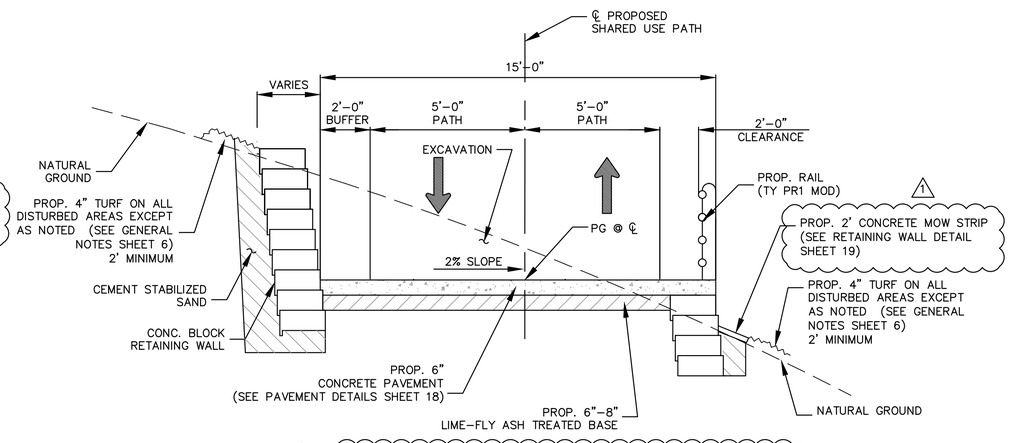

TYPICAL SECTION – RETAINING WALL ON HIGHBANK SIDE AND PEDESTRIAN RAIL ON LOWBANK SIDE
STA 00+70.00 TO STA 02+52.00
STA 03+65.00 TO STA 04+25.00
STA 05+60.00 TO STA 07+15.00

CONSTRUCTION IN HARRIS COUNTY FLOOD CONTROL DISTRICT RIGHT-OF-WAY:

AN HCFCD RIGHT-OF-WAY NOTIFICATION (PERMIT) AND HCFCD 48-HR PRE-CONSTRUCTION NOTICE ARE REQUIRED PRIOR TO ENTERING OR WORKING WITHIN HARRIS COUNTY FLOOD CONROL DISTRICT RIGHT-OF-WAY. BOTH THE HCFCD RIGHT-OF-WAY NOTIFICATION AND 48-HOUR NOTICE MUST BE PROVIDED TO HCFCD AT DCIS@HCFCD.ORG. SITE PLANS MUST BE APPROVED PRIOR TO OBTAINING THE REQUIRED HCFCD RIGHT-OF-WAY NOTIFICATION. BE ADVISED THAT THE HCFCD RIGHT-OF-WAY NOTIFICATION IS SEPARATE FROM THE SITE DEVELOPMENT PERMIT PACKAGE. FOR ADDITIONAL INFORMATION, PLEASE VISIT **HTTP://HCPID.ORG/PERMITS/DOCS/ROW_NOTIFICATION_FOR_ROW_CONST_APP.PDF** OR CONTACT THE PUBLIC REVIEW INSPECTION DEPARTMENT @ (713-956-3033).

BENCHMARK:

FLOODPLAIN REFERENCE MARK NUMBER 050025 IS A TXDOT DISK ON BRIDGE AT HEIGHTS BOULEVARD AND WHITE OAK BAYOU ABOUT 0.1 MILES SOUTH OF IH 10 LOCATED ON UPSTREAM SIDE OF BRIDGE IN KEYMAP 493E IN THE WHITE OAK WATERSHED NEAR STREAM E100-00-00.

ELEV. 40.047 FEET NAVD 1988, CORS '96 (GEOID '12A)

SEE SURVEY CONTROL MAP SHEET FOR TEMPORARY BENCHMARK INFORMATION.

TO ARRANGE FOR LINES TO BE TURNED OFF OR MOVED, CALL CENTERPOINT ENERGY AT 713-207-2222

NOTICE:

FOR YOUR SAFETY, YOU ARE REQUIRED BY TEXAS LAW TO CALL 811 AT LEAST 48 HOURS BEFORE YOU DIG SO THAT UNDERGROUND LINES CAN BE MARKED. THIS VERIFICATION DOES NOT FULFILL YOUR OBLIGATION TO CALL 811.

VERIFICATION OF PRIVATE UTILITY LINES

Date:
CenterPoint Energy/Natural Gas Facilities Verification ONLY.
(This signature verifies that you have shown CNP Natural Gas lines correctly – not to be used for conflict verification.)
(Gas service lines are not shown.) Signature valid for six months.

Date:
CenterPoint Energy/UNDERGROUND Electrical Facilities Verification ONLY.
(This signature verifies existing underground facilities – not to be used for conflict verification.) Signature valid for six months.

Date:
Approved for AT&T Texas/SWBT underground conduit facilities only. Signature valid for one year.

klotz associates
1160 Dairy Ashford, Suite 500
Houston, Texas 77079
T 281.589.7257 F 281.589.7309
houston.office@klotz.com
Texas PE Firm Reg. # F-929

STATE OF TEXAS
BRADLEY R. BROWN
58842
REGISTERED PROFESSIONAL ENGINEER
12/9/15

SURVEYED BY: KUO FB No. X-XXXX

CITY OF HOUSTON
DEPARTMENT OF PUBLIC WORKS AND ENGINEERING

MISSOURI KANSAS TEXAS TRAIL SPUR CONNECTOR

TYPICAL SECTIONS

WBS NUMBER
N-320420-030A-3
DRAWING SCALE
NTS
CITY OF HOUSTON PM
RAYMOND FONG
SHEET No. 5 OF 44

J:\0101.047.001\09.00 Bidding Phase\09.03 Addenda Distribution Records\Revised Sheets\0003 TYPICAL SECTIONS.dwg Dec 09 2015

REV	DESCRIPTION	BY	DATE
1	ADDENDUM NO. 1	CR	12/02/2015

	ITEM DESCRIPTION	LOCATION	UNITS OF MEASURE	ESTIMATED QUANTITY- PAGE 31	ESTIMATED QUANTITY- PAGE 34	ESTIMATED QUANTITY- PAGE 26	ESTIMATED QUANTITY- PAGE 11	ESTIMATED QUANTITY- PAGE 12	ESTIMATED QUANTITY- PAGE 13
	MOBILIZATION		LS						
	TRAFFIC CONTROL AND REGULATION		LS						
	CLEARING AND GRUBBING (INCLUDES TREE REMOVAL)		AC				0.14	0.14	0.12
	REINFORCED FILTER FABRIC BARRIER		LF		1500				
	FILTER FABRIC FENCE		LF		2300				
	STABILIZED CONSTRUCTION EXIT		SY		502				
	ROADWAY EXCAVATION WITH OR WITHOUT SUBGRADE		CY				353	390	320
	EMBANKMENT FILL (OPTIONAL)		CY				180	138	35
	LIME STABILIZED SUBGRADE 6-INCH THICK		SY				328	235	380
	LIME FOR LIME STABILIZED SUBGRADE (DRY WEIGHT)		TON				9.3	5.5	8.2
1	REINFORCED CONCRETE PAVEMENT 6-INCH THICK		SY				471	209	368
	REINFORCED CONCRETE MOW STRIP 4-INCH THICK		SY				19	10	9
	4-INCH DIAMETER PVC PIPE DRAIN		LF				72	198	25
	8-INCH DIAMETER PVC DRAIN		LF				176	176	74
	24-INCH DIAMETER PVC DRAIN		LF					82	62
	24-INCH DIAMETER STORM SEWER BY OPEN CUT		LF				54		
	HEADWALL INCLUDING FLARED WINGS (CAST-IN-PLACE)		EA				2		
1	THERMOPLASTIC PAVEMENT MARKING 4-INCH WIDE WHITE/YELLOW(SLD/BRK)		LF				75	75	64
	TRENCH SAFETY SYSTEM FOR TRENCH EXCAVATIONS		LF				110		
	TRAFFIC SIGN		EA	3					
	COMPOST MANUF TOPSOIL (BIP) (4")		SY				106	116	229
	BLOCK SODDING		SY				240	196	341
	FERTILIZER		AC				0.02	0.02	0.05
	VEGETATIVE WATERING		MG				2.63	2.88	5.68
1	RETAINING WALL (CONC BLOCK)		SF				2160	1350	1242
	RAIL (TY PR1)		LF				256	135	115
	SHEET PILING (PZ - 27)		SF					1400	
	DRILL SHAFT (36 IN) FOR BRIDGE		LF			172			
	CL C CONC (ABUT)		CY			17			
	APPROACH SLAB		CY			20			
	PEDESTRIAN TRUSS BRIDGE SPAN (120') COMPLETE IN PLACE, INCLUDES BUT NOT LIMITED TO DECK SLAB AND SAFETY RAILINGS		EA					1	

1 DRILL SHAFT (18 IN) FOR RETAINING WALL – REMOVED BY ADDENDUM NO.1

CONSTRUCTION IN HARRIS COUNTY FLOOD CONTROL DISTRICT RIGHT-OF-WAY

AN HCFCD RIGHT-OF-WAY NOTIFICATION (PERMIT) AND HCFCD 48-HR PRE-CONSTRUCTION NOTICE ARE REQUIRED PRIOR TO ENTERING OR WORKING WITHIN HARRIS COUNTY FLOOD CONROL DISTRICT RIGHT-OF-WAY. BOTH THE HCFCD RIGHT-OF-WAY NOTIFICATION AND 48-HOUR NOTICE MUST BE PROVIDED TO HCFCD AT DCIS@HCFCD.ORG. SITE PLANS MUST BE APPROVED PRIOR TO OBTAINING THE REQUIRED HCFCD RIGHT-OF-WAY NOTIFICATION. BE ADVISED THAT THE HCFCD RIGHT-OF-WAY NOTIFICATION IS SEPARATE FROM THE SITE DEVELOPMENT PERMIT PACKAGE. FOR ADDITIONAL INFORMATION, PLEASE VISIT **HTTP://HCPID.ORG/PERMITS/DOCS/ROW_NOTIFICATION_FOR_ROW_CONST_APP.PDF** OR CONTACT THE PUBLIC REVIEW INSPECTION DEPARTMENT @ (713-956-3033).

BENCHMARK:

FLOODPLAIN REFERENCE MARK NUMBER 050025 IS A TXDOT DISK ON BRIDGE AT HEIGHTS BOULEVARD AND WHITE OAK BAYOU ABOUT 0.1 MILES SOUTH OF IH 10 LOCATED ON UPSTREAM SIDE OF BRIDGE IN KEYMAP 493E IN THE WHITE OAK WATERSHED NEAR STREAM E100-00-00.

ELEV. 40.047 FEET NAVD 1988, CORS '96 (GEOID '12A)

SEE SURVEY CONTROL MAP SHEET FOR TEMPORARY BENCHMARK INFORMATION.

TO ARRANGE FOR LINES TO BE TURNED OFF OR MOVED, CALL CENTERPOINT ENERGY AT 713-207-2222

NOTICE:

FOR YOUR SAFETY, YOU ARE REQUIRED BY TEXAS LAW TO CALL 811 AT LEAST 48 HOURS BEFORE YOU DIG SO THAT UNDERGROUND LINES CAN BE MARKED. THIS VERIFICATION DOES NOT FULFILL YOUR OBLIGATION TO CALL 811.

VERIFICATION OF PRIVATE UTILITY LINES

Date:

CenterPoint Energy/Natural Gas Facilities Verification ONLY.
(This signature verifies that you have shown CNP Natural Gas lines correctly – not to be used for conflict verification.)
(Gas service lines are not shown.) Signature valid for six months.

Date:

CenterPoint Energy/UNDERGROUND Electrical Facilities Verification ONLY.
(This signature verifies existing underground facilities – not to be used for conflict verification.) Signature valid for six months.

Date:

Approved for AT&T Texas/SWBT underground conduit facilities only. Signature valid for one year.

klotz associates
1160 Dairy Ashford, Suite 500
Houston, Texas 77079
T 281.589.7257 F 281.589.7309
houston.office@klotz.com
Texas PE Firm Reg. # F-929

STATE OF TEXAS
BRADLEY R. BROWN
58842
REGISTERED PROFESSIONAL ENGINEER
12/8/15

SURVEYED BY: KUO FB No. X-XXXX

CITY OF HOUSTON
DEPARTMENT OF PUBLIC WORKS AND ENGINEERING

MISSOURI KANSAS TEXAS TRAIL SPUR CONNECTOR

SUMMARY OF QUANTITIES

WBS NUMBER
N-320420-030A-3
DRAWING SCALE
NTS
CITY OF HOUSTON PM
RAYMOND FONG
SHEET No. 8 OF 44

J:\0101.047.001\09.00 Bidding Phase\09.03 Addenda Distribution Records\Revised Sheets\0006 QUANTITY SUMMARY SHEET.dwg Dec 08 2015

REV	DESCRIPTION	BY	DATE
1	ADDENDUM NO. 1	JBP	12/3/15

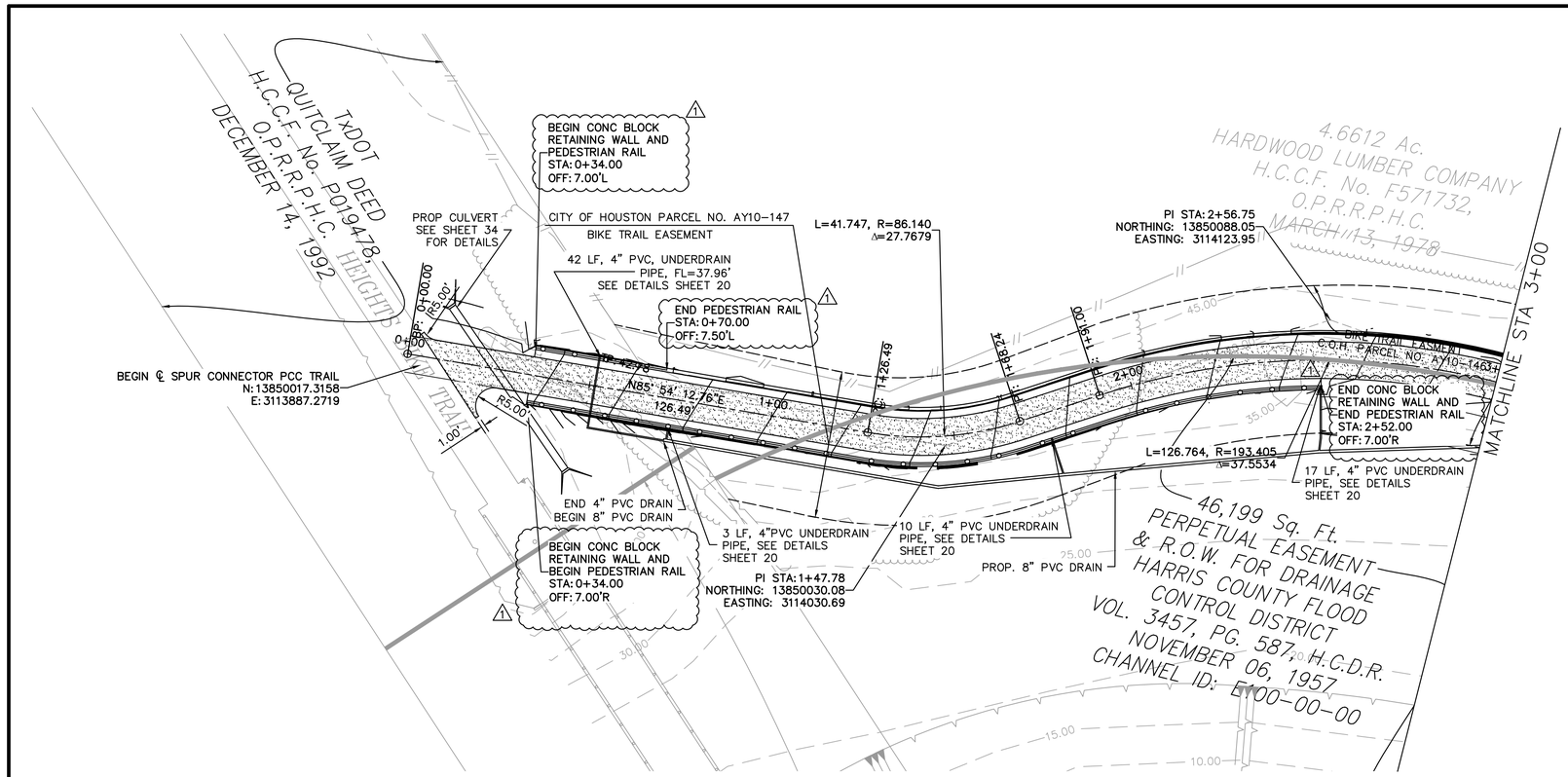

NOTES:

1. ANY TREE REMOVAL SHALL BE CUT AT NATURAL GROUND AND ROOTS SHALL BE LEFT UNTOUCHED TO AVOID DISTURBING ANY GAS FACILITIES

0 20 40

SCALE 1"=20'-0"
SCALE 1"=4'-0"

TEMPORARY BENCHMARKS:

TBM B-110
SET 'X' CUT ON THE RIGHT SIDE OF BIKE TRAIL. ELEV. = 47.94'
D. BL STA.: 0+33.80/47.94' RT

EARTHWORK QUANTITIES		
CUT	FILL	NET
179 CY	244 CY	65 CY (FILL)

LEGEND

- BOREHOLE LOCATION
- PROP BIKE TRAIL
- PEDESTRIAN SAFETY RAIL
- PROP LANDSCAPE WALL
- HCFCD ROW LINE
- HIGHBANK
- BIKE TRAIL EASEMENT

CONSTRUCTION IN HARRIS COUNTY FLOOD CONTROL DISTRICT RIGHT-OF-WAY

AN HCFCD RIGHT-OF-WAY NOTIFICATION (PERMIT) AND HCFCD 48-HR PRE-CONSTRUCTION NOTICE ARE REQUIRED PRIOR TO ENTERING OR WORKING WITHIN HARRIS COUNTY FLOOD CONROL DISTRICT RIGHT-OF-WAY. BOTH THE HCFCD RIGHT-OF-WAY NOTIFICATION AND 48-HOUR NOTICE MUST BE PROVIDED TO HCFCD AT DCIS@HCFCD.ORG. SITE PLANS MUST BE APPROVED PRIOR TO OBTAINING THE REQUIRED HCFCD RIGHT-OF-WAY NOTIFICATION. BE ADVISED THAT THE HCFCD RIGHT-OF-WAY NOTIFICATION IS SEPARATE FROM THE SITE DEVELOPMENT PERMIT PACKAGE. FOR ADDITIONAL INFORMATION, PLEASE VISIT **HTTP://HCPID.ORG/PERMITS/DOCS/ROW_NOTIFICATION_FOR_ROW_CONST_APP.PDF** OR CONTACT THE PUBLIC REVIEW INSPECTION DEPARTMENT @ (713-956-3033).

BENCHMARK:

FLOODPLAIN REFERENCE MARK NUMBER 050025 IS A TXDOT DISK ON BRIDGE AT HEIGHTS BOULEVARD AND WHITE OAK BAYOU ABOUT 0.1 MILES SOUTH OF IH 10 LOCATED ON UPSTREAM SIDE OF BRIDGE IN KEYMAP 493E IN THE WHITE OAK WATERSHED NEAR STREAM E100-00-00.

ELEV. 40.047 FEET NAVD 1988, CORS '96 (GEOID '12A)

SEE SURVEY CONTROL MAP SHEET FOR TEMPORARY BENCHMARK INFORMATION.

TO ARRANGE FOR LINES TO BE TURNED OFF OR MOVED, CALL CENTERPOINT ENERGY AT 713-207-2222

NOTICE:

FOR YOUR SAFETY, YOU ARE REQUIRED BY TEXAS LAW TO CALL 811 AT LEAST 48 HOURS BEFORE YOU DIG SO THAT UNDERGROUND LINES CAN BE MARKED. THIS VERIFICATION DOES NOT FULFILL YOUR OBLIGATION TO CALL 811.

VERIFICATION OF PRIVATE UTILITY LINES

Date:

CenterPoint Energy/Natural Gas Facilities Verification ONLY. (This signature verifies that you have shown CNP Natural Gas lines correctly – not to be used for conflict verification.) (Gas service lines are not shown.) Signature valid for six months.

Date:

CenterPoint Energy/UNDERGROUND Electrical Facilities Verification ONLY. (This signature verifies existing underground facilities – not to be used for conflict verification.) Signature valid for six months.

Date:

Approved for AT&T Texas/SWBT underground conduit facilities only. Signature valid for one year.

klotz associates
1160 Dairy Ashford, Suite 500
Houston, Texas 77079
T 281.589.7257 F 281.589.7309
houston.office@klotz.com
Texas PE Firm Reg. # F-929

STATE OF TEXAS
BRADLEY R. BROWN
58842
REGISTERED PROFESSIONAL ENGINEER
12/3/15

SURVEYED BY: KUO FB No. X-XXXX

CITY OF HOUSTON

DEPARTMENT OF PUBLIC WORKS AND ENGINEERING

MISSOURI KANSAS TEXAS TRAIL SPUR CONNECTOR

PLAN AND PROFILE
STA 0+00 TO STA 3+00

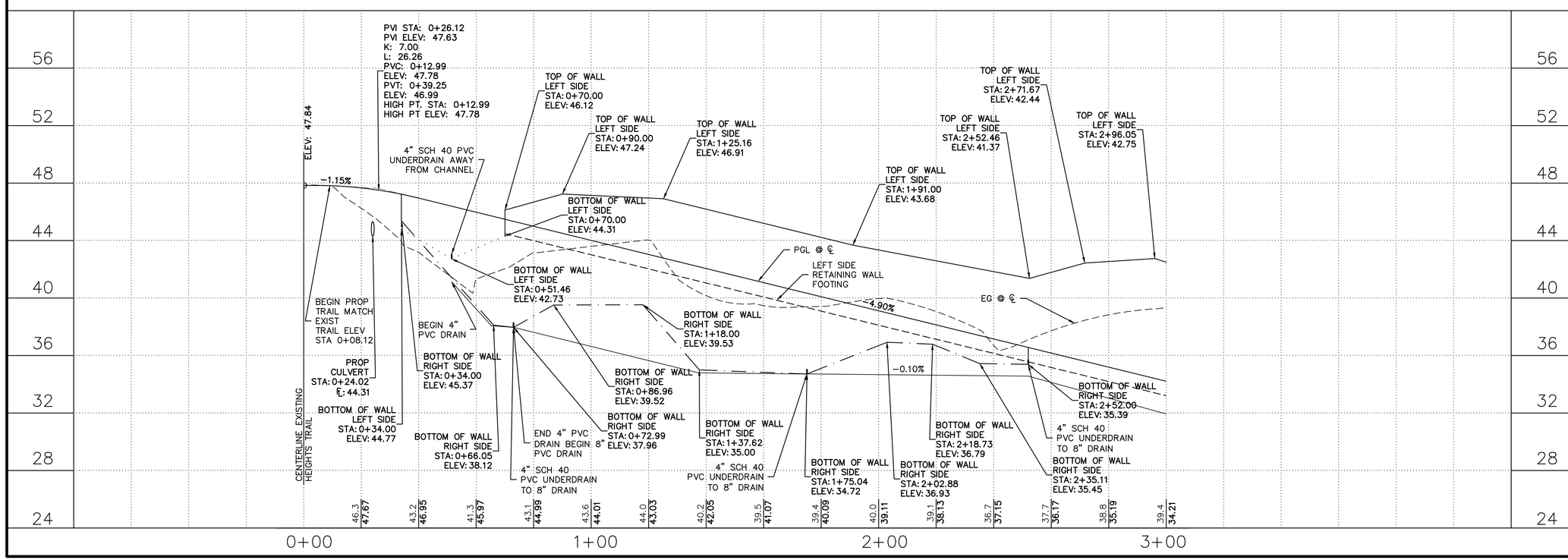

WBS NUMBER	
N-320420-030A-3	
DRAWING SCALE	
VERT: 1"=4' HORIZ: 1"=20'	
CITY OF HOUSTON PM	
RAYMOND FONG	
SHEET No. 11 OF 44	

\\Ka-file1\vol4\0101.047.001\09.00 Bidding Phase\09.03 Addenda Distribution Records\Revised Sheets\0020 P&P 1_recover.dwg Dec 03 2015

REV	DESCRIPTION	BY	DATE
1	ADDENDUM NO. 1	JBP	12/3/15

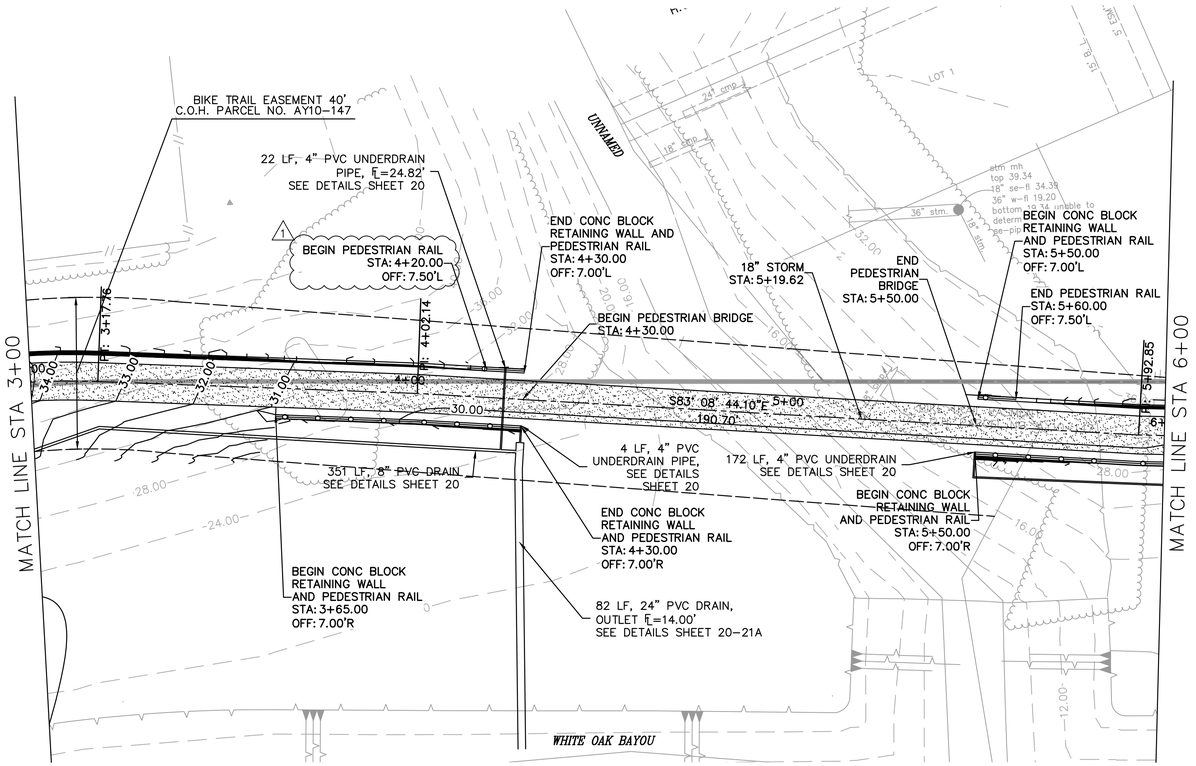

NOTES:

1. ANY TREE REMOVAL SHALL BE CUT AT NATURAL GROUND AND ROOTS SHALL BE LEFT UNTOUCHED TO AVOID DISTURBING ANY GAS FACILITIES.
2. REFER TO SHEET 26 FOR BRIDGE LAYOUT.

0 20 40

SCALE 1"=20'-0"
SCALE 1"=4'-0"

TEMPORARY BENCHMARKS:

TBM B-103
FIND. 1/2" I.R. ALONG THE NORTH TOP OF BANK OF WHITE OAK BAYOU.
ELEV.=19.04'
D. BL STA.: 3+22.05/19.04' RT

TBM B-104
FIND. 1/2" I.R. ALONG THE NORTH TOP BANK OF WHITE OAK BAYOU.
ELEV.=17.99'
D. BL STA.: 5+14.95/17.99'RT

EARTHWORK QUANTITIES		
CUT	FILL	NET
390 CY	138 CY	252 CY (CUT)

LEGEND

- BOREHOLE LOCATION
- PROP BIKE TRAIL
- PEDESTRIAN SAFETY RAIL
- PROP LANDSCAPE WALL
- HCFCD ROW LINE
- HIGHBANK
- BIKE TRAIL EASEMENT
- 4" PVC UNDERDRAIN PIPE

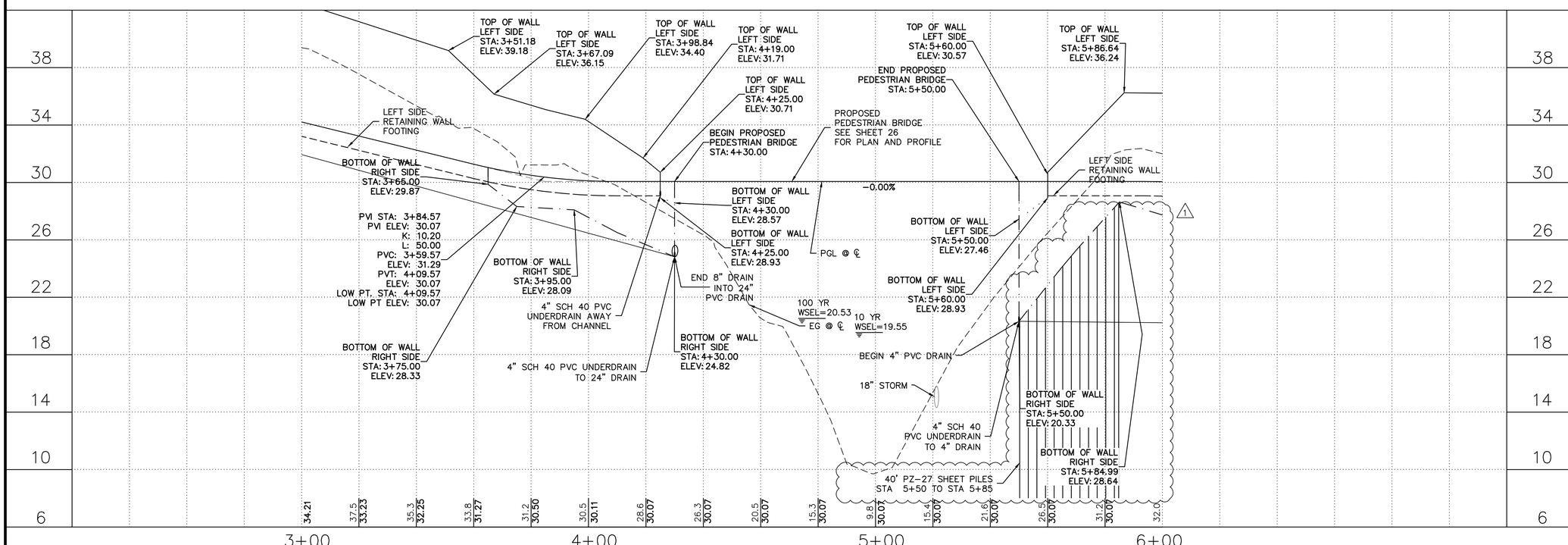

CONSTRUCTION IN HARRIS COUNTY FLOOD CONTROL DISTRICT RIGHT-OF-WAY

AN HCFCD RIGHT-OF-WAY NOTIFICATION (PERMIT) AND HCFCD 48-HR PRE-CONSTRUCTION NOTICE ARE REQUIRED PRIOR TO ENTERING OR WORKING WITHIN HARRIS COUNTY FLOOD CONROL DISTRICT RIGHT-OF-WAY. BOTH THE HCFCD RIGHT-OF-WAY NOTIFICATION AND 48-HOUR NOTICE MUST BE PROVIDED TO HCFCD AT DCIS@HCFCD.ORG. SITE PLANS MUST BE APPROVED PRIOR TO OBTAINING THE REQUIRED HCFCD RIGHT-OF-WAY NOTIFICATION. BE ADVISED THAT THE HCFCD RIGHT-OF-WAY NOTIFICATION IS SEPARATE FROM THE SITE DEVELOPMENT PERMIT PACKAGE. FOR ADDITIONAL INFORMATION, PLEASE VISIT **HTTP://HCPID.ORG/PERMITS/DOCS/ROW_NOTIFICATION_FOR_ROW_CONST_APP.PDF** OR CONTACT THE PUBLIC REVIEW INSPECTION DEPARTMENT @ (713-956-3033).

BENCHMARK:

FLOODPLAIN REFERENCE MARK NUMBER 050025 IS A TXDOT DISK ON BRIDGE AT HEIGHTS BOULEVARD AND WHITE OAK BAYOU ABOUT 0.1 MILES SOUTH OF IH 10 LOCATED ON UPSTREAM SIDE OF BRIDGE IN KEYMAP 493E IN THE WHITE OAK WATERSHED NEAR STREAM E100-00-00.

ELEV. 40.047 FEET NAVD 1988, CORS '96 (GEOID '12A)

SEE SURVEY CONTROL MAP SHEET FOR TEMPORARY BENCHMARK INFORMATION.

TO ARRANGE FOR LINES TO BE TURNED OFF OR MOVED, CALL CENTERPOINT ENERGY AT 713-207-2222

NOTICE:

FOR YOUR SAFETY, YOU ARE REQUIRED BY TEXAS LAW TO CALL 811 AT LEAST 48 HOURS BEFORE YOU DIG SO THAT UNDERGROUND LINES CAN BE MARKED. THIS VERIFICATION DOES NOT FULFILL YOUR OBLIGATION TO CALL 811.

VERIFICATION OF PRIVATE UTILITY LINES

Date:
CenterPoint Energy/Natural Gas Facilities Verification ONLY.
(This signature verifies that you have shown CNP Natural Gas lines correctly - not to be used for conflict verification.)
(Gas service lines are not shown.) Signature valid for six months.

Date:
CenterPoint Energy/UNDERGROUND Electrical Facilities Verification ONLY.
(This signature verifies existing underground facilities - not to be used for conflict verification.) Signature valid for six months.

Date:
Approved for AT&T Texas/SWBT underground conduit facilities only.
Signature valid for one year.

klotz associates
1160 Dairy Ashford, Suite 500
Houston, Texas 77079
T 281.589.7257 F 281.589.7309
houston.office@klotz.com
Texas PE Firm Reg. # F-929

STATE OF TEXAS
BRADLEY R. BROWN
58842
REGISTERED PROFESSIONAL ENGINEER
12-04-15

SURVEYED BY: KUO FB No. X-XXXX

CITY OF HOUSTON

DEPARTMENT OF PUBLIC WORKS AND ENGINEERING

MISSOURI KANSAS TEXAS TRAIL SPUR CONNECTOR

PLAN AND PROFILE
STA 3+00.00 TO STA 6+00.00

WBS NUMBER
N-320420-030A-3
DRAWING SCALE
VERT: 1"=4' HORIZ: 1"=20'
CITY OF HOUSTON PM
RAYMOND FONG
SHEET No. 12 OF 44

J:\0101.047.001\09.00 Bidding Phase\09.03 Addenda Distribution Records\Revised Sheets\0021 P&P 2.dwg Dec 04 2015

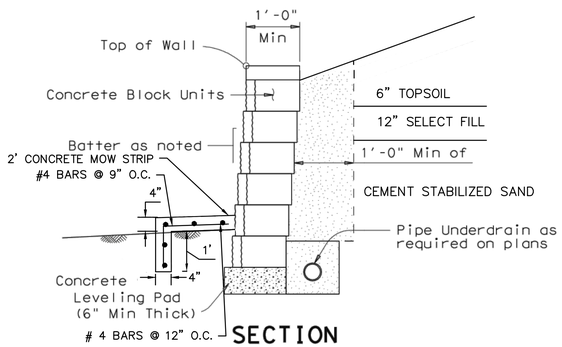

SECTION

(No Earth Reinforcements)

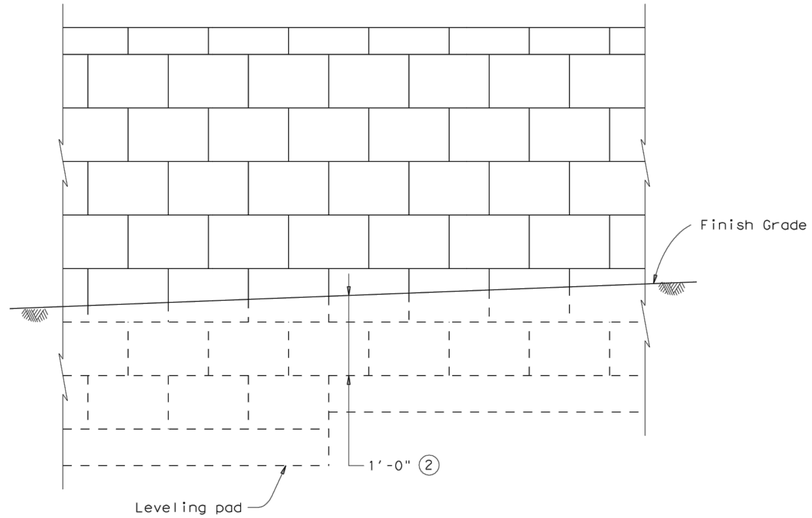

TYPICAL ELEVATION

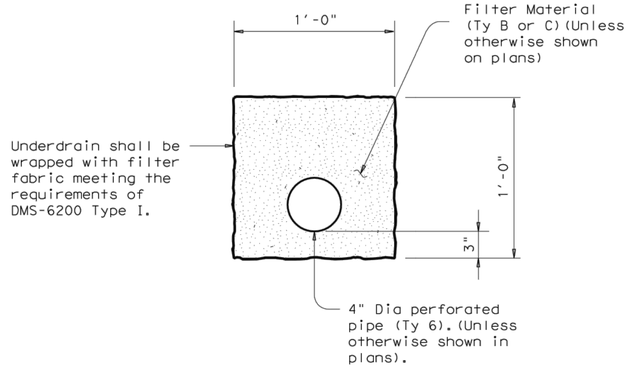

UNDERDRAIN DETAIL

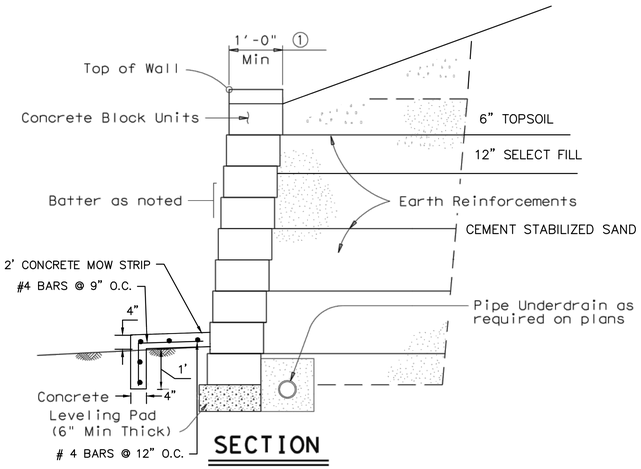

SECTION

(With Earth Reinforcements)

① For systems utilizing continuous structural pins passing thru a minimum of 3 block layers, the minimum block depth shall be 8". The maximum vertical spacing of primary reinforcement on these systems shall be 24", and intermediate reinforcement will not be required.

② Unless noted elsewhere in the plans, 1'-0" minimum cover shall be provided from the top of leveling pad to finish grade.

③ For walls which are designated as landscape walls and are less than 6' tall, the following modifications to the design criteria will be allowed:

Factor of safety in sliding > 1.2.
Factor of safety in overturning > 1.5.
Connection strength factor of safety of 1.0 at ¾" strain.
Minimum earth reinforcement length of 4'.

The above modified criteria does not apply to walls over 6' tall regardless of designation.

EARTH REINFORCEMENTS:

Walls may be constructed without earth reinforcements if all stability criteria are met with the blocks alone. If all stability criteria are not satisfied, earth reinforcements shall be provided.

The long term design strength (LTDS) of earth reinforcement shall be calculated in accordance with current AASHTO Standard and Interim Specifications.

Soil-geogrid pullout coefficient values shall be determined in accordance with Geosynthetics Research Institute (GRI) Method GG-5, "Guidelines for Evaluating Geogrid Pullout".

For the combination of concrete block and geogrid chosen, connection strength data shall be provided. The allowable connection load shall be limited to the connection strength developed at ¾" displacement, divided by a 1.5 safety factor. ③

For internal stability calculations, the failure plane will be assumed to originate at the back of the concrete blocks.

The factor of safety against pullout of the earth reinforcements shall be determined from test data evaluated at ¾" strain.

The maximum vertical spacing of primary earth reinforcement layers shall be 40 inches. ①
The minimum length of primary earth reinforcements shall be 8 feet, measured from the front of the blocks. ③

A layer of intermediate reinforcement shall be provided between primary reinforcements when the spacing between primary layers exceeds twice the horizontal depth of the concrete block unit. Intermediate reinforcement shall have a minimum length of 4 feet, and shall provide local stability for the concrete block units. ①

STABILITY CRITERIA:

Factor of safety in sliding along the base of the structure shall be greater than or equal to 1.5. ③

Factor of safety in overturning shall be greater than or equal to 2.0. ③

The base pressure resultant shall fall within the middle third of the retaining wall.

DESIGN PARAMETERS:

Structure shall be based on the following design parameters:

Random Backfill: Unit weight = 120 pcf.
(Embankment or Existing Soils) ø = 30° c = 0 psf
Select Backfill: Unit weight = 120 pcf
ø = 34° c = 0 psf

GENERAL NOTES:

Sections and Typical Elevation shown are for informational purposes only. Specific geometry is to be determined based on wall layouts and other plan information.

Unless otherwise shown in the plans, wall batter shall be a maximum of 3" per foot. Blocks shall be placed horizontally, and a positive means of obtaining batter such as pins, keyways, or concrete lips shall be provided.

REV	DESCRIPTION	BY	DATE
1	ADDENDUM NO. 1	CR	12/02/2015

STATE OF TEXAS
BRADLEY R. BROWN
58842
REGISTERED PROFESSIONAL ENGINEER

12/02/15

Texas Department of Transportation
Bridge Division

CONCRETE BLOCK RETAINING WALL

RW(CB)

FILE: rwstde02.dgn	DN: TxDOT	CK: TxDOT	DW: GHO	CK: MPM
©TxDOT March 2010	DISTRICT	FEDERAL AID PROJECT		SHEET
REVISIONS	HOU			19

COUNTY	CONTROL	SECT	JOB	HIGHWAY
HARRIS	0912	72	299	VA

DISCLAIMER:
The use of this standard is governed by the "Texas Engineering Practice Act". No warranty of any kind is made by TxDOT for any purpose whatsoever. TxDOT assumes no responsibility for the conversion of this standard to other formats or for incorrect results or damages resulting from its use.

PATH:
LEVELS DISPLAYED

J:\0101.047.001\09.00 Bidding Phase\09.03 Addenda Distribution Records\Revised Sheets\0032 CONCRETE BLOCK RETAINING WALL.dwg Dec 03 2015