Document 00911

NOTICE OF
ADDENDUM NO. 1

Date of Addendum: 4/21/15

PROJECT NAME: Bearing pads replacement (bent 5,9,13,17,21,25 and 29) on Westlake Houston Pkwy over San Jacinto River

PROJECT NO: WBS No N- 320445-031A-4

BID DATE: **April 30, 2015** (Bid date has been changed from April 23, 2015 to April 30, 2015)

FROM: J. Timothy Lincoln, P.E., City Engineer
City of Houston
Department of Public Works and Engineering
611 Walker, 15th Floor
Houston, Texas 77002
Attn: Sudarshan Gouni, P.E. Project Manager

TO: Prospective Bidders

The referenced Addendum forms a part of the Bidding Documents and will be incorporated into the Contract documents, as applicable.

Written questions regarding this Addendum may be submitted to the Project Manager following the procedures specified in Document 00200 – Instructions to Bidders. Immediately notify the City Engineer through the named Project Manager upon finding discrepancies or omissions in the Bid Documents.

Ravi Kaleyatodi, P.E. CPM
Senior Assistant Director
Department of Public Works and Engineering

JK SG

END OF DOCUMENT
Addendum #1
4-17-2015

Document 00910

ADDENDUM NO. 1

Date of Addendum: 4/21/15

PROJECT NAME: Bearing Pads Replacement (Bents 5,9,13,17,21,25, and 29) on Westlake Houston Pkwy over San Jacinto River

PROJECT NO: WBS No. N320445-031A-4

BID DATE: April 30, 2015

FROM: Mr. James T. Lincoln, P.E. City Engineer
City of Houston, Department of Public Works and Engineering
1002 Washington
Houston, Texas 77002
Attn: Sudarshan Gouni P.E, Project Manager

TO: Prospective Bidders

This Addendum forms a part of the Bidding Documents and will be incorporated into the Contract documents, as applicable. Insofar as the original Project Manual and Drawings are inconsistent, this Addendum governs.

CHANGE TO BID DATE:

THE BID DATE FOR THIS PROJECT HAS BEEN CHANGED FROM APRIL 23, 2015 TO APRIL 30, 2015.

This Addendum uses the change page method: remove and replace or add pages, or Drawing sheets, as directed in the change instructions below. Change bars (|) are provided in the outside margins of pages from the Project Manual to indicate where changes have been made; no change bars are provided in added Sections. Reissued Drawing sheets show the Addendum number below the title block and changes in the Drawing are noted by a revision mark and enclosed in a revision cloud.

CHANGES TO PROJECT MANUAL

CONTRACT DOCUMENTS

1) Document 00410A – Replace 0410-A2
2) 1110- Replaced with new summery of work 1110
3) Replace Doc 00800.
4) Included "As Built" plans for Contractor information only

DATED:

Ravi Kaleyatodi, P.E. CPM
Senior Assistant Director
Engineering Branch
Engineering and construction Division

SG
JK

4-17-15

END OF ADDENDUM NO.1

END OF DOCUMENT

Question: Wanted to confirm that there is not a MBE/ WBE/ PDBE goal on the project?

Answer: If there bid come in at over 1 million then they must comply with the MWBE goal and requirements at bid time. 00800 document is revised to show the MBE/WBE/PDBE goal.

QUESTION: "We need to know what the width of the bent caps are. Are there any as-built drawings available for us to send to our engineer?"

ANSWER: The size of bent caps are 3'-6" x 3'-6" square. Attached are as-built drawings for your information.

QUESTION: "If our engineering shows no need to close the bridge during the raising of bridge - can we work during the day underneath the bridge? Will we be allowed to replace pads without detouring traffic?"

ANSWER: The contractor can work during the day underneath the bridge when the bridge is not being lifted. Traffic must be shifted to other bridge before lifting and replacing the bearing pads. If any other construction methods are proposed by the contractor, submit work plans signed and sealed by a Texas licensed professional engineer for review and approve by the City of Houston project manager.

QUESTION: "Need to clarify working hours - sheets 3-8. Note 2 - hours are from 8:30 am to 5 am. Is this time if we need to close lanes only? If we work on barge or swing stage, can we work during day?"

ANSWER: Note #2 refers to lanes closure only. If the contractor works on barge or swing stage, he can work during the day. Please remember that no traffic is allowed on lifted bridge or during lifting.
QUESTION: "Page 3-8, note 6 says no lane closure from 6 am to 10 pm? This is different than note 2. Wanted to confirm that no setups left in place when not working."

ANSWER: Note #2 is correct. Please correct Note #6 to read "NO LANE CLOSURE DURING 5:00 AM TO 8:30 PM.".

QUESTION: Sheet 20 of 30 & others have a note that states that the contractor is to verify exist bearing pad dimension & slope.

ANSWER: The note on sheets 11 to 17 and 20 to 26 is revised to read "(SEE NOTE 7 ON THE ELASTOMER BEARING AND BEAM END DETAILS SHEET 28 CONCERNING PAD TAPER/BEAM SLOP TOLERANCE)"

QUESTION: Will core drilling 2" holes in the bridge deck be allowed for bearing pad installation?

ANSWER: Yes the drilling is allowed for X-Ray for rebar and replaces concrete with epoxy grout 5000 psi or better.

Document 00800

SUPPLEMENTARY CONDITIONS

The following Paragraphs amend and supplement the January 1. 2015 edition of General Conditions. Unaltered portions of General Conditions remain in effect.

ARTICLE 1 - GENERAL PROVISIONS:

1.1 *DEFINITIONS: Insert the following Paragraph 1.1.9.1, and 1.1.23, and reorder the remaining definitions accordingly.*

1.1.9.1 The firm of _____ has been employed by the City as Construction Manager for the Work.

1.1.23 *Good Faith Efforts.* Steps taken to achieve an MBE, WBE, SBE, or PDBE goal or other requirements which, by their scope, intensity, and usefulness, demonstrate the bidder's responsiveness to fulfill the business opportunity objective, as well as the Contractor's responsibility to put forth measures to meet or exceed the MBE, WBE, SBE, or PDBE goal (Contract Goal). These steps apply from before a contract's award, through its duration, and after its conclusion, in the event the Contractor has been unsuccessful in meeting the Contract Goal. These efforts are required whether a Goal Oriented Contract or a Regulated Contract, as defined in the Office of Business Opportunity's Policy & Procedures Manual, available at http://www.houstontx.gov/obo.

ARTICLE 3 - THE CONTRACTOR

3.5 *LABOR: Insert the following Paragraphs, 3.5.3.1.1, 3.5.3.1.2 and3.5.3.1.3.*

3.5.3.1.1 If the Original Contract Price is greater than One Million Dollars, Contractor shall make Good Faith Efforts to comply with the City ordinances regarding Minority Business Enterprises (MBE), Women Business Enterprises (WBE), Persons with Disabilities Business Enterprises (PDBE) and Small Business Enterprise (SBE) participation goals which are as follows:

.1 the MBE goal is 11 percent,

.2 the WBE goal is 7 percent, and

.3 the PDBE goal is NA percent.

.4 The bidder may substitute SBE participation of no more than four percent of the MBE goal, the WBE goal, or portions of the MBE Goal and WBE Goal.

3.5.3.1.2 The MBE, WBE, PDBE, and SBE goals are specific to this Agreement. The Contractor shall make reasonable efforts to achieve these goals.

3.5.3.1.3 Failure by Contractor to comply with the goals for MBE, WBE, SBE, or PDBE is a material breach of the Agreement, which may result in termination of the Agreement, or such other remedy permitted as the City deems appropriate.

ARTICLE 8 - TIME

8.1 *PROGRESS AND COMPLETION: Delete Paragraph 8.1.6 in its entirety and replace it with the following Paragraph 8.1.6:*

8.1 *PROGRESS AND COMPLETION: Add the following Paragraph 8.1.6.1.*

8.1.6.1 Contractor shall credit the City by Change Order for inspection services for overtime work or work performed on Sundays or Legal Holidays. The amount Contractor credits the City will be [$50.00 per hour] [*actual costs*] per inspector for inspection services.

ARTICLE 9 - PAYMENTS AND COMPLETION

9.1 *UNIT PRICE WORK: Delete Section 9.1 in its entirety and insert the following Section 9.1.*

9.1 References to Unit Prices in individual Specification sections are not applicable to the Contract. Include payment for portions of the Work required by these sections in the Stipulated Price for the Contract.

MANDATORY

9.12 *LIQUIDATED DAMAGES: Insert the following Paragraph 9.12.1.1.*

9.12.1.1 The amount of liquidated damages payable by Contractor or Surety for each and every day of delay beyond Contract Time, are $ 800 per day.

ARTICLE 11 - INSURANCE AND BONDS

11.2 INSURANCE TO BE PROVIDED BY CONTRACTOR: Insert the following Paragraph 11.2.1.2.

11.2.1.2 Contractor shall purchase for the duration of the Contract the insurance set out in Table 2 in addition to the minimum insurance coverage set out in section 11.2.1.

11.5 *MAINTENANCE BONDS: Insert the following Paragraph 11.5.2.*

11.5.2 One-year Surface Correction Bond: Contractor shall provide, on the City standard form, an additional One-Year Bond in an amount equal to four percent of the Original Contract Price or cost of repair. Bond shall provide for Contractor's correction, replacement, or restoration of backfill or subsurface and surface work not in accordance with the Contract, within one year from the date the One-Year Maintenance Bond has expired.

END OF DOCUMENT

Document 00410A

BID FORM – PART A

To: **The Honorable Mayor and City Council of the City of Houston**
City Hall Annex
900 Bagby Street
Houston, Texas 77002

Project: Bearing Pads Replacement (Bents 5, 9, 13, 17,21, 25 and 29) on West Lake Houston Parkway Bridge over San Jacinto River

Project No.: WBS No. N-320445-031A-4

Bidder: _____

(Print or type full name of business entity, such as corporation, LLC, etc)

OFFER

A. Total Bid Price: Having examined the Project location and all matters referred to in Bid Documents for the Project, we, the undersigned, offer to enter into a Contract to perform the Work for the Total Bid Price shown on the signature page of this Document

B. Security Deposit: Included with the Bid is a Security Deposit in the amount of 10 percent of the Total Bid Price subject to terms described in Document 00200 – Instructions to Bidders.

C. Period for Bid Acceptance: This offer is open to acceptance and is irrevocable for 90 days from Bid Date. That period may be extended by mutual written agreement of the City and Bidder.

D. Addenda: All Addenda have been received. Modifications to Bid Documents have been considered and all related costs are included in the Total Bid Price.

E. Bid Supplements: The following documents are attached:

[X] Security Deposit *(as defined in Document 00200 – Instructions to Bidders)*
[X] Document 00450 - Bidder's Statement of MWSBE Status
[X] Document 00452 - Contractor's Submission List - Fair Campaign Ordinance Form A
[X] Document 00453 – Bidder's Statement of Residency *(not required for AIP funded project)*
[X] Document 00454 - Affidavit of Non-interest
[X] Document 00455 - Affidavit of Ownership or Control
[ ] Document 00456 - Bidder's Certificate of Compliance with Buy American Program *(required for AIP funded project)*
[X] Document 00457 – Conflicts of Interest Questionnaire (CIQ)
[ ] Document 00458 - Bidder's Certificate Regarding Foreign Trade Restriction *(required for AIP funded project)*
[ ] Document 00459 - Contractor's Statement Regarding Previous Contracts Subject to EEO *(required for AIP funded project)*
[X] Document 00460 – (POP 1) Pay or Play Acknowledgement Form

[X] Document 00470 – Bidder's MWSBE Participation Plan *(required unless no MWSBE participation goal is provided in Document 00800* (the "Goal")*).*

[X] Document 00471 – Pre-bid Good Faith Efforts *(required if the goal in Bidder's Participation Plan–Document 00470 is lower than the Goal).*

[X] Document 00472 – Bidder's Goal Deviation Request *(required if the goal in Bidder's Participation Plan–Document 00470 is lower than the Goal).*

[X] Others as listed: Valid official letter from OBO with your designation as a City or Local Business *(Bidder's Participation Hire Houston First)*

CONTRACT TIME

A. If offer is accepted, Contractor shall achieve Date of Substantial Completion within 150 days after Date of Commencement of the Work, subject to adjustments of Contract Time as provided in the Contract.

SECTION 01110
SUMMARY OF WORK

PART 1 GENERAL

1.1 SECTION INCLUDES

Summary of the Work including work by the City, City-furnished Products, work sequence, future work, Contractor use of Premises, special conditions for substantial completion and City occupancy

1.2 WORK COVERED BY CONTRACT DOCUMENTS

Work of the Contract is for replacement of bearing pads for the existing Northbound and Southbound bridges of West Lake Houston Parkway over a tributary of the San Jacinto River which flows into Lake Houston. The replacement of bearing pads is for bents 5, 9, 13, 17, 21, 25 and 29 for both the Northbound and Southbound bridges. Replacement of the bridge pads will require the following items:

1. Temporary removal of guardrail that would prevent the jacking of the bridge or damage the bridge or bridge rail during the jacking of the bridge.
2. Repair of the damaged concrete section at guardrail at bent 25 on the NB bridge.
3. During the replacement of the bearing pads for both beam 1 through beam 7 of the NB and the SB bridges, if present, the existing dowels need to be cut in order to remove old bearing pads.
4. All the expansion joints should be cleaned or resealed if damaged. Replacement of joint seal should be Silcoflex System or TXDOT approved equal material. Currently only Bent 25 expansion joint will need to be cleaned and resealed. During the course of cleaning the other expansion joints the resealing of those joint maybe warranted, if they are damaged or torn.
5. Replacement of the bearing pads will require the bridge deck to be jacked up; the existing supporting bents can be used to jack the bridge deck. Note that all the bents that require bearing pad replacement are over water. Adhere to the TXDOT specification Item 495 Raising of Existing Structures.
6. There is an existing above ground 8" gas-line that begins to be supported by the bridge starting at Bent 17 and is supported between the Northbound and Southbound bridges till it reaches the North Abutment Bent 33. The existing supports are approximately 30 feet on center. The two closes supports to each Bent that bearing pads are going to be replaced will need to be released completely. Before the existing supports are removed temporary support for gas line will need to be provided from above at the existing guard rails providing a suspended support that will move when the bridge is being jacked. After the bearing pads are replaced and the bridge is set back down the existing supports

are to be reinstalled and the temporary supports are to be removed to the next location where bridge will be jacked. This process will be repeated for each jacking of the bridge deck for both NB and SB bridges. The cost of the temporary supports is incidental to the bridge jacking. Center Point Energy will need to be notified prior to any jacking so that any requirements from Center Point Energy are met and they sign off on the jacking. Refer to Existing Utilities Section of this document for additional information.

The contractor will only be allowed to perform jacking of bridge deck Sundays thru Thursdays only from 8:30 PM to 5:00 AM and close only one bridge at a time. All traffic lanes must be clear of construction debris, signs, barricades and channelizing devices during regular hours, 5:00 AM to 8:30 PM. During construction hours at least one lane of traffic in each direction should be maintained. In order to do so the traffic control devices will be required as follows:

A. Mobilizing and setting traffic control devices.

a. Erect project identification signs as specified in specification Section 01580 and according to the detail included in the construction drawings, as directed by the City of Houston Project Manager. No separate pay for project identification signs, incidental to mobilization cost.

b. Maintain and place SW3P devices during construction in accordance with guidelines established by Best Management Practices, TCEQ and EPA. Contractor shall submit all forms to agencies prior to beginning construction activities according to documents herein.

1.3 CASH ALLOWANCES

A. Complete entire work and site restoration within 150 calendar days from the date of commencement as defined in document 00700 – General Conditions. Failure to meet 150 calendar day completion deadlines will result in liquidated damages in accordance with document 00800 - Supplementary Conditions. Include the following specific Cash Allowances in Contract Price under provision of General Conditions Paragraph 3.11:

1. Street cut permit
2. Harris County Flood Control District permit

B. City contractor is responsible for obtaining the above mentioned permits prior to any construction activities. In document 00410B of this package, budgets have been allocated as cash allowances for these purposes.

1.4 ALTERNATES

A. Not applicable.

1.5 CITY FURNISHED PRODUCTS

A. Items furnished by City for installation and final connection by Contractor:

1. Not applicable.

B. Contractor's responsibilities:

1. Contractor will supply all new construction materials as outlined in Schedule of Unit Price Work, Document 00410.
2. Arrange and pay for product delivery to the site.
3. Receive and unload products at the site; jointly with the City, inspect for completeness or damage.
4. Handle, store, install and finish products.
5. Repair or replace damaged items.

1.6 WORK SEQUENCE

A. Coordinate construction schedule and operations with the City. Before the construction activities begin on the bridge the contractor shall follow the following procedure:

1. Contractor shall utilize the left lane closure concept, shown in TCP drawings in order to close lanes for construction of temporary pavement and removal of median and curb.
2. Contractor shall be responsible for the placing changeable message signs (PCMS). PCMS signs must clearly notify the public about the upcoming construction activities, and must also include the start date and the construction duration. Both signs must display the message such as "BRIDGE REPAIRS XX-XX TO XX-XX EXPECT DELAYS 8:30 PM to 5:00 AM." for 21 days, 14 days prior to construction and 7 days during construction. No lanes shall be closed during daytime hours for the southbound bridge. No lanes shall be closed on the northbound bridge during the hours 7:00 AM to 9:00 AM and 2:00 PM to 6:00 PM Monday through Friday without approval of the City Traffic Engineer. Only single lane bridge closures are allowed for northbound between 9:00 AM to 2:00 PM. Note applies except for median work.
3. The contractor shall provide a minimum of three (3) off duty police officers during construction activities; one at each end of the project & one as a relief to the other police officers.
4. No field office is required for this project.

Phase I Northbound

1. Install all Traffic Control channelizing devices and signs as per the Traffic Control Plan for the phase I of project for the closing of the northbound traffic lanes on

the Westlake Houston Pkwy Bridge for the repair work of the proposed bridge bents.

2. Jack the bridge sections as required to replace bearing pads per TXDOT Item 495
3. Set down bridge section.
4. Clean and seal joints on abutments and bents 5, 9, 13, 17, 21, 25, and 29 as shown in the northbound bridge layout sheets.
5. Replace the bearing pads at bents 5, 9, 13, 17, 21, 25, and 29 as shown in the northbound bridge layout sheets.
6. Repair C4 Rail at Bent 25.

Phase II Southbound

1. Install all Traffic Control channelizing devices and signs as per the Traffic Control Plan for the phase II of project for the closing of southbound traffic lanes on the Westlake Houston Pkwy Bridge for the repair work of the proposed bridge bents.
2. Jack the bridge sections as required to replace bearing pads per TXDOT Item 495
3. Set down bridge section.
4. Clean and seal joints on abutments and bents 5, 9, 13, 17, 21, 25, and 29 as shown in the southbound bridge layout sheets.
5. Replacement of the bearing pads at bents 5, 9, 13, 17, 21, 25, and 29 as shown in the southbound bridge layout sheets.

B. Refer to Section 01312 – Coordination and Meetings.

a. Contractor shall coordinate with any other contractors of any trade or discipline working adjacent to the project site prior to and during construction.

b. Coordinate with utility companies with facilities along West Lake Houston Bridge and the intersecting streets within the project limit, any other contractors and construction activities in the construction area, and Harris County Flood Control District (HCFCD). Ensure availability of access, availability of selected portions of this area to others and provide appropriate information for planning purposes to other contractors.

c. Contractor, on owner's behalf, shall obtain all construction permits required by the regulatory agencies having jurisdiction over the project construction. For work inside the Harris County Flood Control District (HCFCD) right-of-way, it is required that the contractor obtain a specific Flood Control Permit issued by the Harris County Permit Office per the HCFCD Policy, Criteria & Procedure Manual, Section 1.1.4. Contact the Harris County Permit Office at (713) 956-3000.

d. Coordinate construction schedule and operation with City Project Manager, traffic management, maintenance division contractor and private utilities.

e. Due to the scope of the project; contractor's proposed method, timing and construction sequence on the overall project is very important. Contractor shall submit suitable method and sequence of construction, as well as a list of major construction activities for review and approval by the Project Manager prior to construction.

f. Contractor's proposed sequence of work shall incorporate Traffic Control Plans and Traffic Control General Notes as shown in the construction drawings. (Sheets 2 to 8).

1.7 CONTRACTOR USE OF PREMISES

A. Comply with procedures for access to site and Contractor's use of rights-of-way as specified in Section 01145 - Use of Premises.

B. Construction operations limited to City's rights-of-way provided by City of Houston rights-of-way.

C. Utility Outages and Shutdown: Provide notification to City and private utility companies (when applicable) a minimum of 48 hours, excluding weekends and holidays, in advance of required utility shutdown. Coordinate all work as required.

D. Prevent overstress of any structure, and any part or member of it, during construction. This applies to existing work and structures affected by operations. Check effect of operations in this regard, and provide temporary supports and connections required to assure safety and stability of both new and existing work and to prevent overstress of any part.

E. Restore and sod all non-paved areas that are damaged during construction as per specification section 02922-Sodding. The sodding should be placed for one (1) foot from back of median curb, and from back of curb to the right-of-way for the entire limits of the project.

F. Traffic Control: Traffic control plan responsive to Texas Manual on Uniform Traffic Control Devices (TMUTCD) and sealed by a Registered Professional Engineer is incorporated into the drawings. If traffic control will be implemented without modification to plans provided, submit letter confirming that decision. If traffic control will be modified from what is shown, submit traffic control plan in conformance with TMUTCD and sealed by a Registered Professional Engineer. Traffic control provided is based on the assumption there is no conflict with traffic control from separate projects within construction limits. Coordinate work to prevent traffic control conflicts or submit revised traffic control plans sealed by Registered Professional Engineer and conformed

to TMUTCD at no additional cost. Submit traffic control plan to Project Manager for approval.

1.8 STREET CUT ORDINANCE

A. Excavations on or under pavement in the City's right of way must have a permit. Comply with City of Houston, Texas Ordinance No. 2000-1115, an ordinance amending Chapter 40 of the Code of Ordinances, Houston, Texas, relating to excavating in the Public right of way.

B. Comply with the latest edition of street cut new pavement repair and pavement replacement details.

C. Quantities are included for street cut pavement repair and replacement in applicable specification sections for unit price contracts.

D. Include payment for street cut pavement repair and replacement in lump sum bid for stipulated price contracts.

1.9 WARRANTY

Comply with warranty requirements in accordance with Document 00700 – General Conditions.

1.10 ADDITIONAL CONDITIONS FOR SUBSTANTIAL COMPLETION

In additions to requirements outlined in Document 00700 – General Conditions, for Contractor to be substantially complete with the work and call for inspection by Project Manager to confirm, the following special conditions must be met or completed:

A. All areas disturbed for construction purposes must be restored to their original condition or better without any additional cost.

B. Complete report of all pay items.

C. "As-built mark-ups" of the construction drawings of all work performed within public rights-of-ways shall be provided to the Project Manager as part of the project close-out procedures.

1.11 GENERAL CONSTRUCTION NOTES

A. Contractor shall give notice to all authorized inspectors, superintendents or persons in charge of private and public utilities or rights-of-way affected by his or her operations, prior to commencement of work.

B. Call the Traffic Operations of the City of Houston Public Works and Engineering Department when work is scheduled near traffic signal conduits Call 311 or (713) 881-3275 at least five working days in advance.

C. Contractor shall coordinate with any other contractors of any trade or discipline working adjacent to the project site prior to and during construction.

D. Contractor shall be responsible for adequately protecting existing structures, utilities, trees, shrubs, fences and other adjoining facilities. Any

damaged irrigation/sprinkler systems caused by the contractor during construction within the project limits shall be replaced as incidental to the contract/project cost. All damages caused by contractor shall be repaired or replaced at the contractor's expense.

E. Contractor shall comply with OSHA Regulations and State of Texas laws concerning excavation, trenching and shoring as specified in City of Houston Ordinance No. 87-1457.

F. Contractor shall notify/inform all local businesses, home owners, property owners, schools, banks (located within the project limits), Fire Department, EMS services, Police Department, and Chris Rowland, Superintendent EAA, Office of Commissioner Jack Morman at 281-590-4120 two (2) weeks prior to the start of construction.

G. Contractor shall contact and coordinate with Center Point Energy at 713.207.2222 at least eight weeks in advance when work is scheduled for construction to arrange for overhead lines that are in conflict with the construction activity/ equipment to be deactivated or removed.

H. Adequate drainage shall be maintained by contractor at all times during construction. All construction run-offs shall comply with the 2006 Standard of "Storm Water Management Handbook for Construction Activities" as prepared by Harris County/ HCFCD and the City of Houston. All in compliance with the Texas pollutant discharge elimination system requirements. Contractor shall be responsible for preventing debris from falling into the HCFCD ditches while doing any work. Contractor shall be responsible for removal of siltation in existing and proposed storm sewer systems that result from construction activities associated with this project.

a. **HCFCD San Jacinto River Tributary** – Contractor shall be responsible for preventing any debris from falling into the HCFCD tributary while doing any work. Contractor shall submit the following documents to Harris County Flood Control District (forms included at the end of this document).

i. Drawing(s)/ exhibit(s) depicting work in HCFCD ROW.
ii. Completed "Notice Application for Right-of-Way Construction" application.
iii. "All Users Bond – October 2004" (Power of Attorney is needed for the bond).
iv. 48-hour pre-construction notification form – for work within Harris County Flood Control right of way prior to any construction work near the existing bridge on San Jacinto River.

1.12 EXISTING UTILITIES

A. Underground utilities (public and private) exist in the vicinity of this project. While every effort has been made to show locations for existing utilities, they are approximate and other utilities may exist in the vicinity of this project

which is not shown on these plans. The Consultant and the City do not warranty the accuracy and completeness of the existing utilities. The location and grades of existing utilities are either based on as-built drawings, Houston GIMS or survey information.

B. Contractor shall field verify the location and elevation of all utilities prior to commencing construction or any excavation. Contractor shall field locate all un-metered fire lines, large water meters, and/or isolation valves before installing new water lines. No separate pay item is provided for this work. Contractor shall be responsible for any damage to the existing utilities and shall repair the damaged utilities to the existing condition or better with no additional cost.

C. Contractor shall contact the utility coordinating committee at (713) 223-4567 or 1800-669-8344 a minimum of 72 hours prior to construction to have main and service lines field located.

D. Public utility service lines (water) are not shown on the drawings. Contractor shall anticipate that such service lines exist and repair them if damaged during construction. No separate pay will be made for repairs. The cost shall be incidental to the work.

E. There is an existing 8" gas line supported by the bridge between NB and SB bridges. Contact Center Point Energy at 713-659-2111 or 1-800-792-8036 contact a minimum of 72 hours prior to the beginning any jacking of the bridge deck.

F. City to contact CenterPoint Personnel, Elias Hernandez, 281-821-0288 or 832-250-0894 3 working days prior to any activity in or around existing 8" HP gas line.

G. Contractor to place 2 temporary supporting I-beams at locations directed by CenterPoint Personnel. I-beams should be placed across concrete rails between North and Southbound bridges, to be used for temporary support of the existing 8-inch HP gas line.

H Caution should be taken to confirm that I-beam does not extend into oncoming traffic.

I Upon completion of each bridge joint bearing pad replacement, contractor to contact CentrePoint personnel to remove temporary support and restore permanent support under 8-inch HP gas line

J Continue above noted procedure until all bridge joint bearing pads have been replaced, per City of Houston project.

K The temporary support is not a separate pay item and is incidental to the cost of the project.

1.13 CENTERPOINT ENERGY ELECTRICAL FACILITIES

A. Contractor shall hand dig within 18 inches of CenterPoint Energy underground electrical facilities.

B. Overhead electric lines exist on and adjacent to the project site, which may be live during the construction period. Contractor shall facilitate his or her work so as not to interrupt services unless permitted by CenterPoint Energy.

C. Contractor shall exercise caution when working in the vicinity of CenterPoint Energy electrical cable, underground wiring and overhead lines.

D. When excavating within 5 feet and beneath a depth of 3 feet below existing grade of a utility pole or anchor to which CenterPoint Energy facilities are attached, CenterPoint Energy will secure or brace these poles and anchor prior to excavation unless the pole requires relocation due to construction. The cost of CenterPoint Energy's efforts is incidental. No separate pay item.

1.14 STREET CUT REQUIREMENTS AND PAVEMENT RESTORATION

A. Contractor shall comply with rules, regulations and construction requirements as described in the street cut ordinance Chapter 40, Article V, Houston City Code – Excavation in public way and comply with amendments provided by Texas Ordinance No. 2006-0595, including the following fee schedule.

Schedule of Permit Application Fees*	
Initial Application Fee:	
Tunneling, Jacking and Boring only	$150
All other Methods of Excavation	$200
Permit Extension Application Fee:	
Other Than Steel Plate Temporary Surface	$25
Steel Plate Temporary Surface	$50
Data Entry Fee for Non-Electronic Submission (per application):	$50

* All fees/charges are non-refundable.

B. Contractor shall restore all street cut pavements to the same or better condition that existed prior to excavation. Contractor shall comply with street cut and restoration methods as detailed in the City of Houston Standard Details shown in Construction Documents.

C. Contractor shall obtain all required permits and signs prior to performing any methods of construction involving street excavation in existing pavements.

D. Unless otherwise approved by the City, any pavement removal not shown on the plans shall be incidental to the cost of the associated proposed utility work.

1.15 STORM WATER POLLUTION PREVENTION PLAN

The Storm Water Pollution Prevention Plan for this project is governed by sections 01410, 01570, 01575. Contractor shall comply with Storm Water Pollution Prevention Plan. There is no

separate pay item or cash allowance for Storm Water Pollution Prevention Plan implementation and maintenance /clean up; the cost is incidental to unit price of filter fabric fence. Contractor shall be responsible for preventing any debris from falling into San Jacinto River by tying burlap or fabric filter under the existing bridge. The construction entry or exits constructed used for bridge repair is not a separate pay item and is incidental to the cost of the project. The contractor must restore the site used for construction entry or exits to the original condition or better without any additional cost.

1.16 ALTERNATE CONSTRUCTION METHODS

Alternate construction methods will be allowed in accordance with applicable details and specifications in Contract Documents at no additional cost to the City of Houston provided the City will receive substantial benefit from alternate construction method(s). Contractor accepts responsibility for all additional cost of geotechnical investigations and incidental items, including any re-design that may be necessary. Submit the following for review by City Engineer prior to commencement of any construction activity if such alternate construction methods are to be considered. All modifications as listed below must be signed and sealed by a licensed Professional Engineer registered in the State of Texas prior to submittal to the City Engineer.

1. Proposed construction method and detailed plan of approach.
2. Proposed traffic control plan.
3. Revisions to material specifications.

1.17 TREE PRESERVATION AND TREATMENT SPECIFICATIONS

There is no Tree Protection Plan in this construction project. However contractor is responsible to protect trees in the construction area by providing orange plastic fence around the tree that meets the City of Houston standards. There is no separate pay item or cash allowance for tree protection and is incidental to the cost of the project.

PART 2 PRODUCTS – NOT USED

PART 3 EXECUTIONS – NOT USED

END OF SECTION

HARRIS COUNTY ENGINEERING DEPARTMENT
HARRIS COUNTY, TEXAS

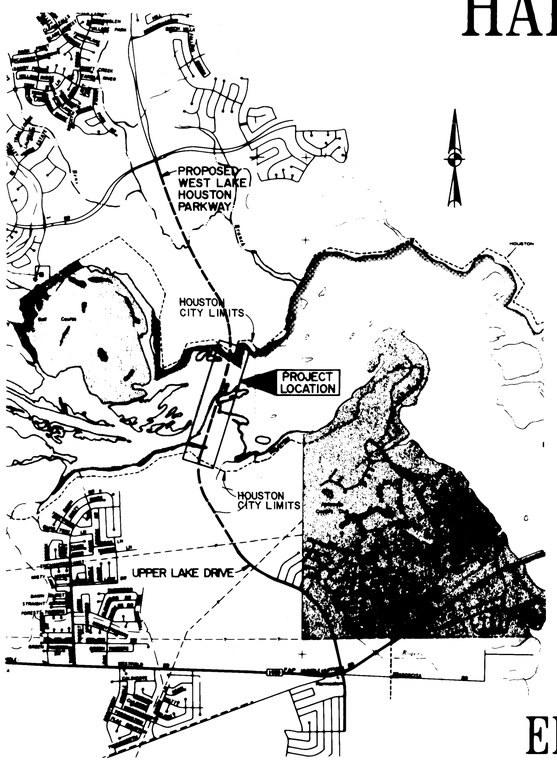

VICINITY MAP
SCALE : 1" = 1.5 MILES
KEY MAP NO. 337- H, J, P, N
(Am 1005-D

CONSTRUCTION OF WEST LAKE HOUSTON PARKWAY BRIDGE OVER WEST FORK SAN JACINTO RIVER (LAKE HOUSTON)

WEST LANES - BRIDGE NO. 4118-55

1982 BOND FUND 2030 PRECINCT FOUR

PROGRAM NO. 001 ACCOUNT NO. 2815

ORGANIZATION NO. 104

EL FRANCO LEE
COMMISSIONER PRECINCT NO. 1

JON LINDSAY
COUNTY JUDGE

STEVE RADACK
COMMISSIONER PRECINCT NO. 3

JIM FONTENO
COMMISSIONER PRECINCT NO. 2

JERRY EVERSOLE
COMMISSIONER PRECINCT NO. 4

TOMMY J. TOMPKINS
COUNTY AUDITOR

TERRY A. ANDERSON, P.E.
COUNTY ENGINEER

PRIVATE UTILITIES SHOWN :
CENTRAL TELEPHONE
COMPANY OF TEXAS

HARRIS COUNTY 1836 TEXAS

Turner Collie & Braden Inc.
ENGINEERS • PLANNERS

INDEX OF DRAWINGS

SHEET	DESCRIPTION
1	TITLE SHEET
2-10	BRIDGE LAYOUT (1 OF 9 THRU 9 OF 9)
11-15	SOIL BORING INFORMATION (1 OF 5 THRU 5 OF 5)
16,17	ABUTMENT BENT 1 (1 OF 2 AND 2 OF 2)
18,19	ABUTMENT BENT 33 (1 OF 2 AND 2 OF 2)
20	MISCELLANEOUS ABUTMENT DETAILS
21,22	INTERIOR BENT DETAILS (1 OF 2 AND 2 OF 2)
23	BEARING SEAT ELEVATIONS
24	FRAMING PLAN
25,26	PRESTRESSED BEAM DETAILS (1 OF 2 AND 2 OF 2)
27-31	SLAB DETAILS (1 OF 5 THRU 5 OF 5)
32,33	SLAB ELEVATIONS (1 OF 2 AND 2 OF 2)
34	APPROACH SLAB AND SLOPE PROTECTION DETAILS
35	TYPE C4 RAIL DETAILS
36	BRIDGE RAILING DETAILS
37	SEALED EXPANSION JOINT DETAILS
38	APPROACH DETAILS - SOUTH END
39	APPROACH DETAILS - NORTH END
40	PAVING DETAILS
41	EROSION CONTROL MAINTENANCE
42,43	SIGNING AND PAVEMENT MARKING (1 OF 2 AND 2 OF 2)
44	STANDARD BUTTON LAYOUT
45-47	TRAFFIC CONTROL (1 OF 3 THRU 3 OF 3)
48	BRIDGE PLAQUE
49	HARRIS COUNTY ENGINEERING PROJECT SIGN
50	FLEX-BEAM GUARD RAIL

LOG 92-0181

AF 28185

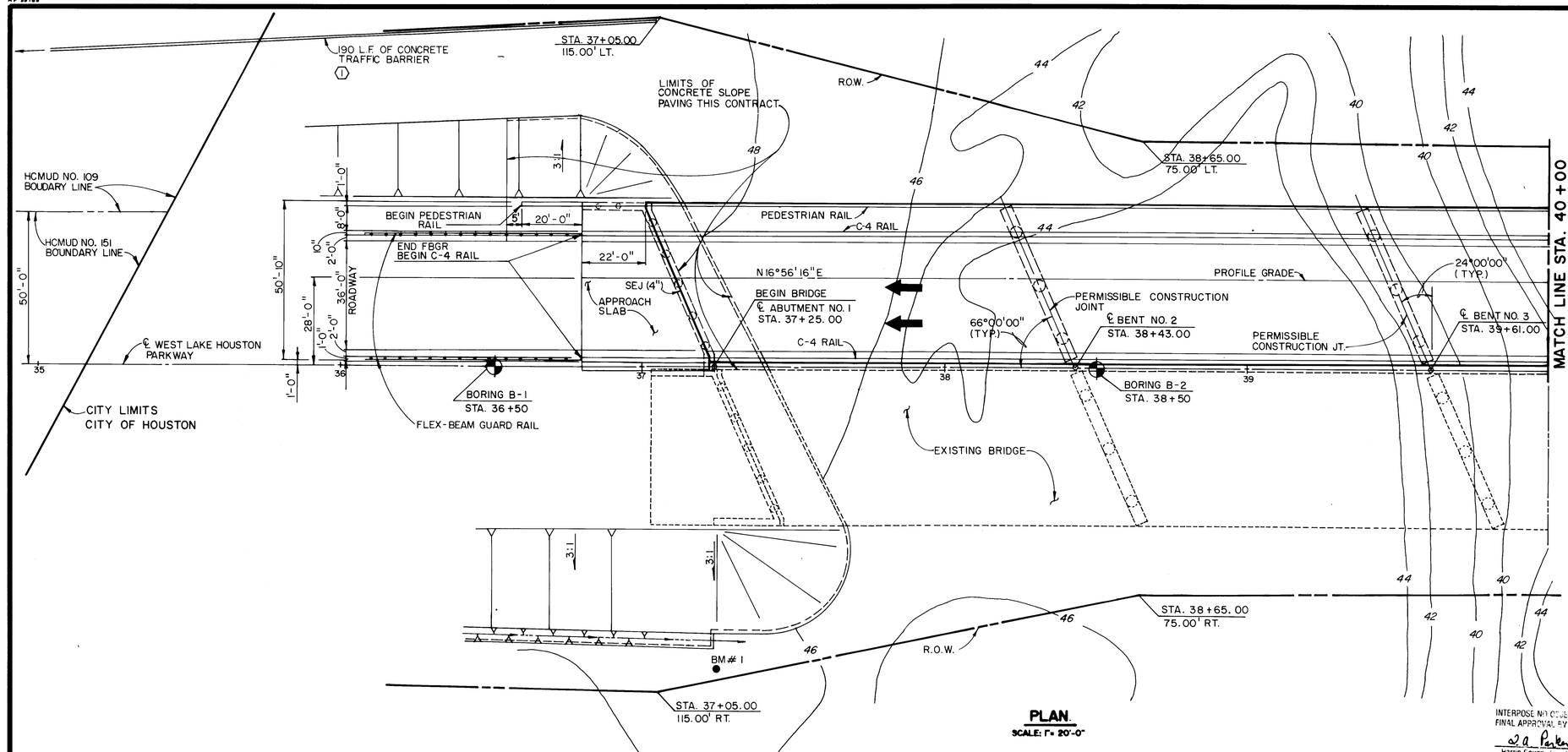

PLAN.
SCALE: 1" = 20'-0"

NOTE:

THE CORPS OF ENGINEERS PERMIT (SEE SPECIFICATIONS) ALLOWS THE CONTRACTOR TO PLACE UP TO 3,710 C.Y. OF TEMPORARY FILL TO IMPROVE HIS ACCESS TO THE CONSTRUCTION SITE. THE EXACT PLACEMENT OF THE TEMPORARY FILL IS AT THE DISCRETION OF THE CONTRACTOR, PROVIDED IT DOES NOT EXCEED 3,710 C.Y. NOR IS IT PLACED OUTSIDE THE RIGHT-OF-WAY. NO SEPERATE PAYMENT WILL BE MADE FOR TEMPORARY FILL. REMOVAL OF TEMPORARY FILL IS COVERED BY SPECIAL ITEM 1, PREPARING RIGHT-OF-WAY.

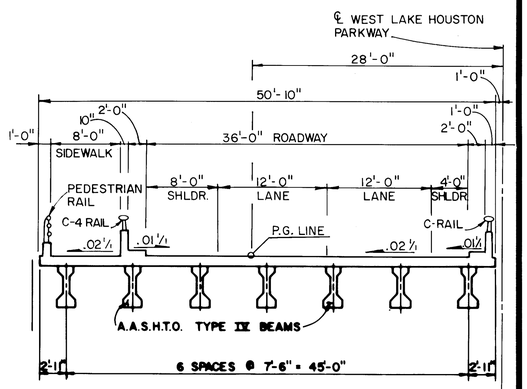

TYPICAL SECTION
SCALE: 1/8" = 1'-0"

INTERPOSE NO OBJECTION
FINAL APPROVAL BY OTHERS
J. A. Parker P.E.
Harris County Flood Control District
4/2/92
Date
THE ABOVE SIGNATURE VALID FOR ONE (1) YEAR ONLY

GENERAL NOTES

1. DESIGNED ACCORDING TO AASHTO 1989 STANDARD SPECIFICATIONS, AND INTERIM SPECIFICATIONS THERETO HS 20 44 LOADING.

BENCHMARK DATA

BM # 1: SET ALUMINUM CAP IN CONCRETE STA. 37+25.00, 100.00' RIGHT. EL. 45.99 (ELEVATIONS ARE BASED ON NATIONAL GEODETIC VERTICAL DATUM 1964 ADJUSTMENT).

CONTRACTOR TO NOTIFY THE FOLLOWING UTILITY AGENCIES 48 HOURS PRIOR TO EXCAVATING NEAR THEIR UTILITIES:
A) UTILITY LOCATION & COORDINATION COUNCIL 1-800-245-4545
B) ARTEX (DISTRICT OPERATOR) 713-358-2828
C) ENTEX 713-654-5141
D) KINGWOOD CABLEVISION 713-358-2004
E) CENTEL 713-540-4191

BEGIN BRIDGE @ FRONT FACE OF ABUTMENT 1 BACKWALL & ℄ ABUTMENT
STA. 37+25.00 (28'-0" LT.)
PG EL. 58.75

3776'-0" OVERALL
472'-0" CONTINUOUS SLAB UNIT
SPAN 1 - 118'-0" PRESTR. CONC. BEAM SPAN
SPAN 2 - 118'-0" PRESTR. CONC. BEAM SPAN
SPAN 3 - 118'-0" PRESTR. CONC. BEAM SPAN

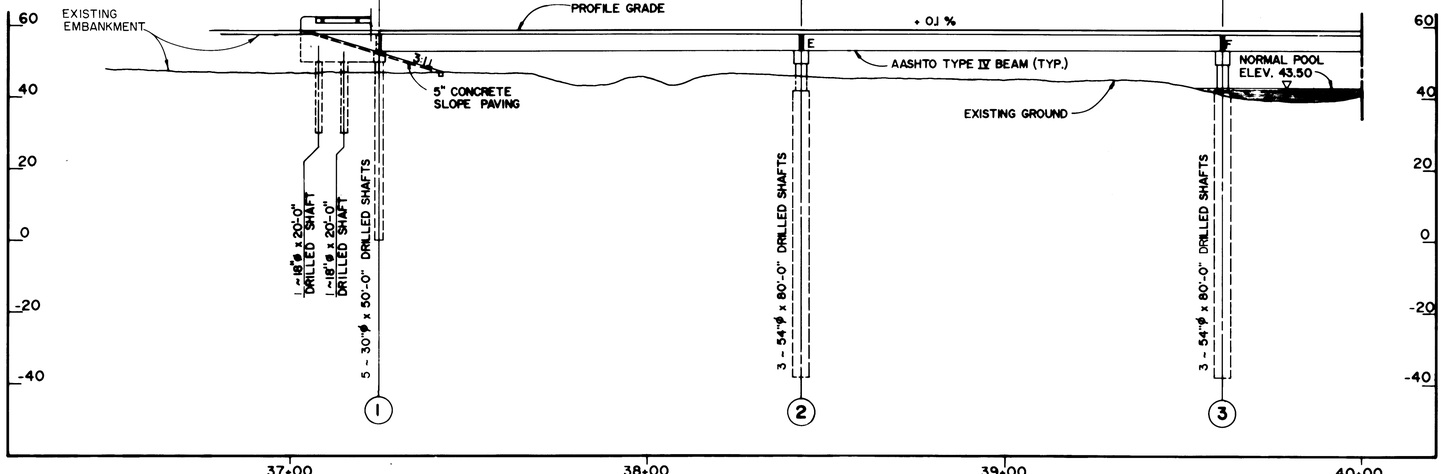

ELEVATION
SCALE: 1" = 20'-0"

CITY OF HOUSTON
APPROVALS

WATER DESIGN	5/19/92	STREET, BRIDGE & R.O.W.	5/12/92
WATER QUALITY	5/16/92	STORM SEWERS DESIGN	5.16.92
CONSTRUCTION	6/1/92	WASTEWATER DESIGN	5/13/92
TRAFFIC & TRANSPORTATION	5/27/92	PLANNING & DEVELOPMENT DEPT.	

ASST. DIRECTOR OF CAPITAL PROJECTS — 6-1-92 — DIRECTOR OF CAPITAL PROJECTS

STATE OF TEXAS
C. B. MYLIUS
19909
REGISTERED PROFESSIONAL ENGINEER
2-4-92

NO.	DATE	REVISION	APPROV.
4			
3			
2			
1	4-1-94	ADDED CONCRETE TRAFFIC BARRIER	

WEST LAKE HOUSTON PARKWAY
WEST FORK SAN JACINTO RIVER BRIDGE

BRIDGE LAYOUT
WEST LANES

1 OF 9

Turner Collie & Braden Inc.
CONSULTING ENGINEERS
TEXAS AUSTIN/DALLAS/HOUSTON/PORT ARTHUR
COLORADO DENVER

Unit JANAK	Scale AS NOTED	Date JULY, 1991	
Designed EDC	Checked CM	Job No. 62-68012-020	
Drawn BST	Approved	Sheet 2 of 50	

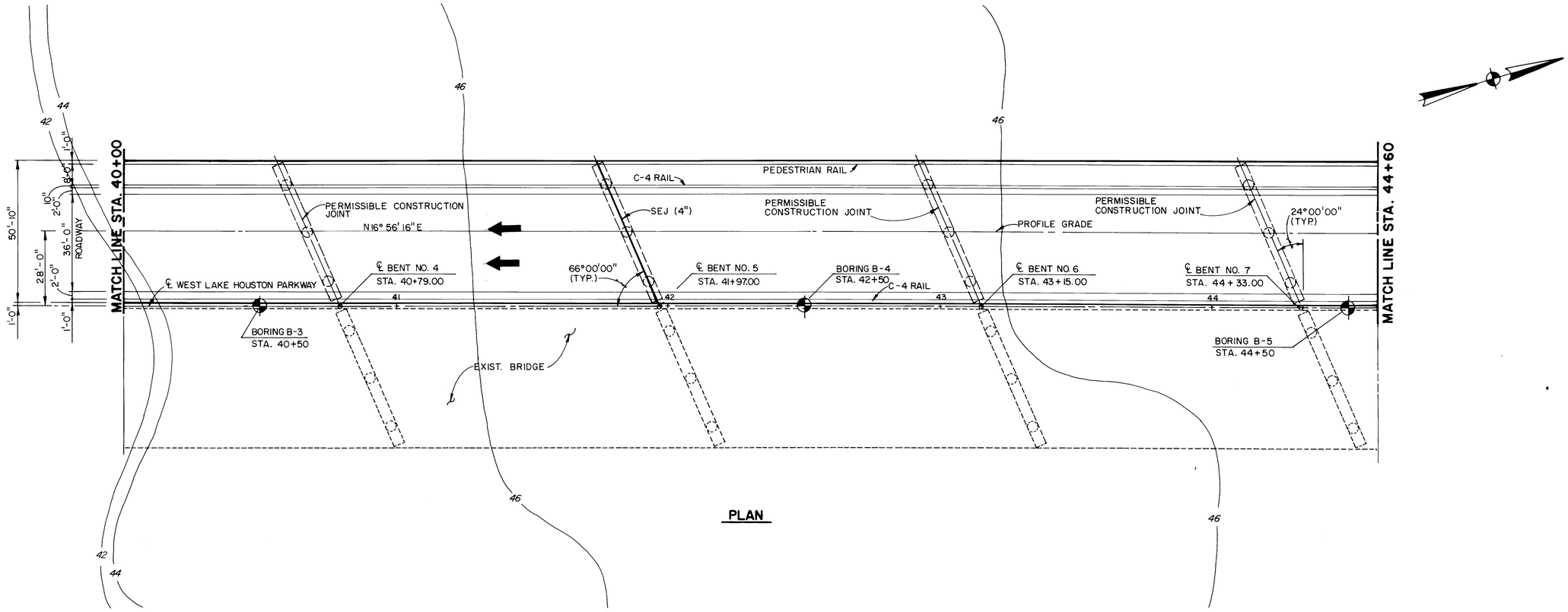

PLAN

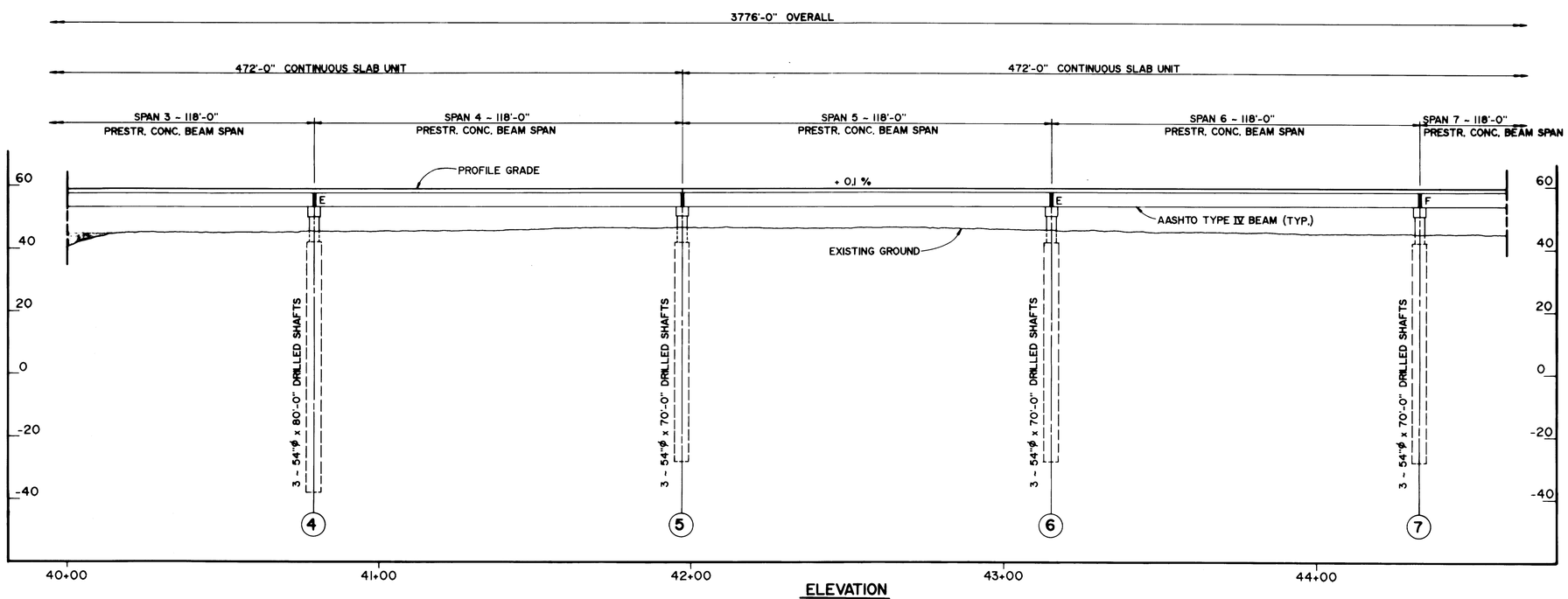

ELEVATION

INTERPOSE NO OBJECTION
FINAL APPROVAL BY OTHERS
Harris County Flood Control District
4/2/92
Date
THE ABOVE SIGNATURE VALID FOR ONE (1) YEAR ONLY

CITY OF HOUSTON
APPROVALS
WATER DESIGN 5/19/92
STREET, BRIDGE & R.O.W. 5/12/92
WATER QUALITY
STORM SEWERS DESIGN 5/14/92
CONSTRUCTION 4/4/92
WASTEWATER DESIGN 5/12/92
TRAFFIC & TRANSPORTATION 5/27/92
PLANNING & DEVELOPMENT DEPT.
ASST. DIRECTOR OF CAPITAL PROJECTS
DIRECTOR OF CAPITAL PROJECTS 6-1-92

STATE OF TEXAS
C. B. MYLIUS
19909
REGISTERED PROFESSIONAL ENGINEER
2-4-92

NO.	DATE	REVISION	APPROV.
4			
3			
2			
1			

WEST LAKE HOUSTON PARKWAY
WEST FORK SAN JACINTO RIVER BRIDGE

BRIDGE LAYOUT
WEST LANES

2 OF 9

Turner Collie & Braden Inc.
CONSULTING ENGINEERS
TEXAS AUSTIN/DALLAS/HOUSTON/PORT ARTHUR
COLORADO DENVER

Unit JANAK	Scale: 1" = 20'-0"	Date JULY, 1991
Designed EDC	Checked CM	Job No. 62-68012-020 contract
Drawn BST	Approved	Sheet 3 of 50

AF 39185

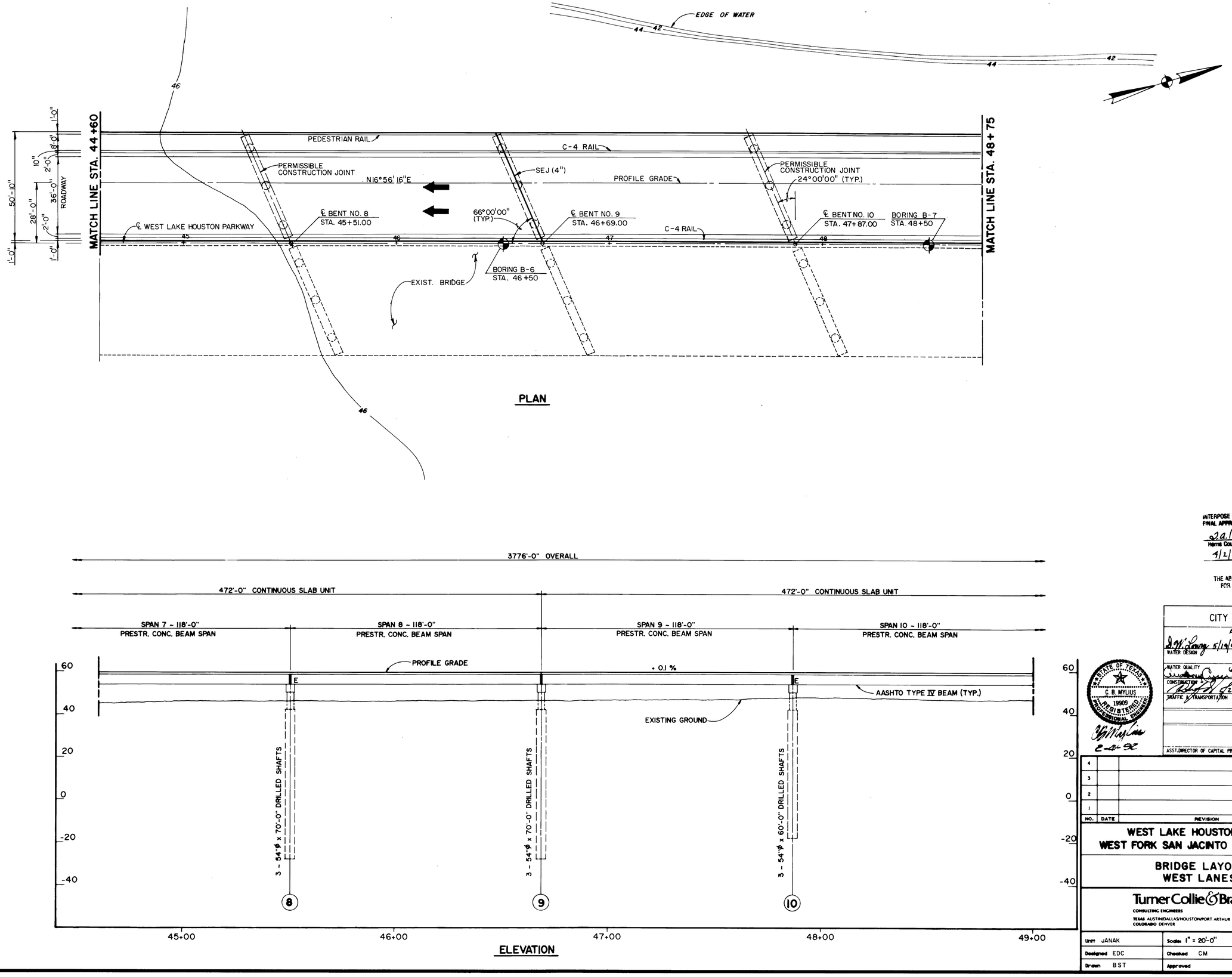

INTERPOSE NO OBJECTION
FINAL APPROVAL BY OTHERS
J.A. Patin DEG
Harris County Flood Control District
4/2/92
Date
THE ABOVE SIGNATURE VALID FOR ONE (1) YEAR ONLY

CITY OF HOUSTON
APPROVALS

WATER DESIGN — 5/19/92	STREET, BRIDGE & R.O.W. — 5/12/92
WATER QUALITY	STORM SEWERS DESIGN — 5-14-92
CONSTRUCTION — 4/6/92	WASTEWATER DESIGN — 5/11/92
TRAFFIC & TRANSPORTATION — 4/27/92	PLANNING & DEVELOPMENT DEPT.
ASST. DIRECTOR OF CAPITAL PROJECTS	DIRECTOR OF CAPITAL PROJECTS — 6-1-92

STATE OF TEXAS
C. B. MYLIUS
19909
REGISTERED PROFESSIONAL ENGINEER
C. B. Mylius
4-27-92

NO.	DATE	REVISION	APPROV.
4			
3			
2			
1			

WEST LAKE HOUSTON PARKWAY
WEST FORK SAN JACINTO RIVER BRIDGE

BRIDGE LAYOUT
WEST LANES

3 OF 9

Turner Collie & Braden Inc.
CONSULTING ENGINEERS
TEXAS AUSTIN/DALLAS/HOUSTON/PORT ARTHUR
COLORADO DENVER

Unit JANAK	Scales 1" = 20'-0"	Date JULY, 1991	
Designed EDC	Checked CM	Job No. 62-68012-020 Contract	
Drawn BST	Approved	Sheet 4 of 50	

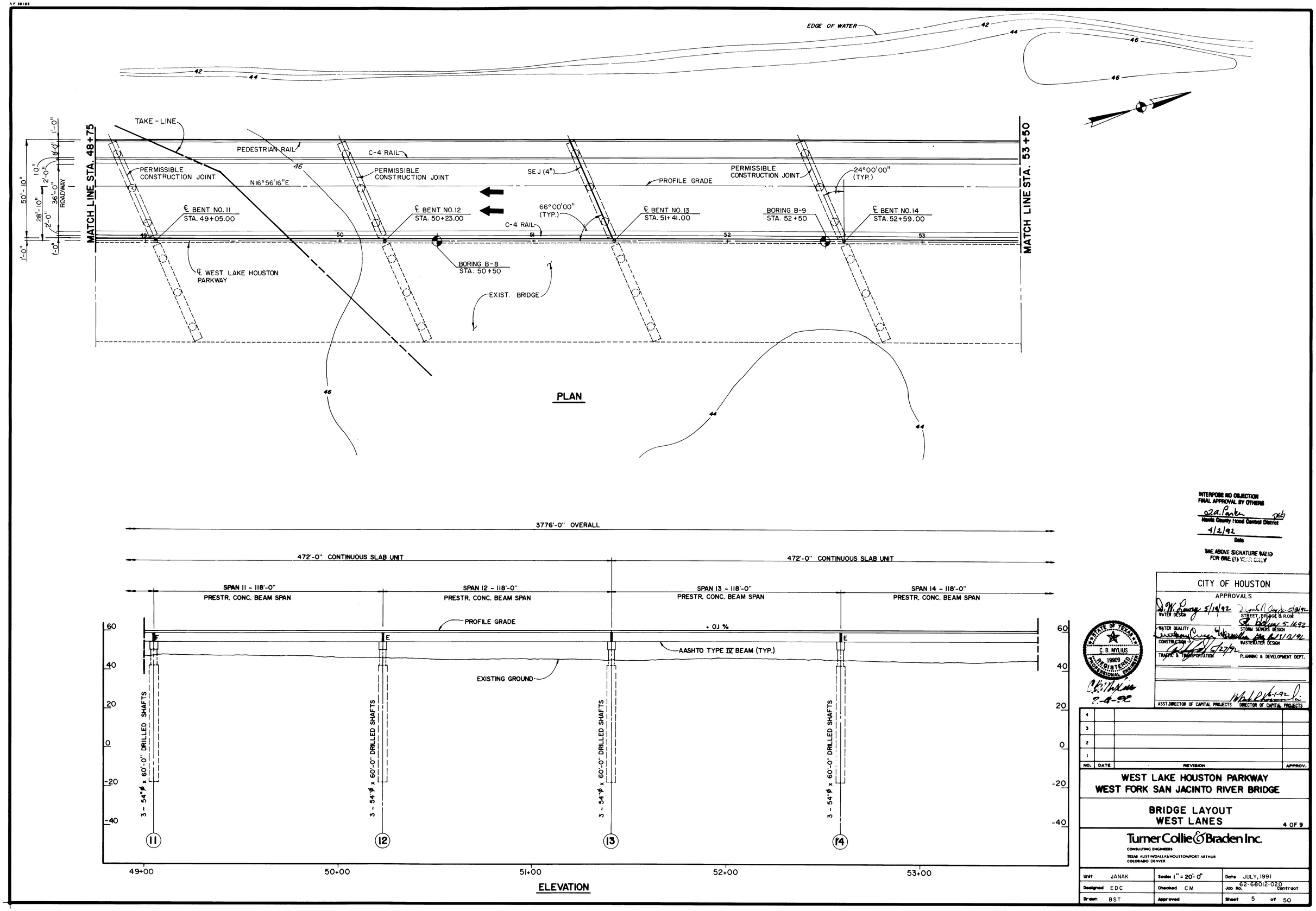

INTERPOSE NO OBJECTION
FINAL APPROVAL BY OTHERS
J.A. Parker
Harris County Flood Control District
4/2/92
Date
THE ABOVE SIGNATURE VALID FOR ONE (1) YEAR ONLY

CITY OF HOUSTON
APPROVALS

WATER DESIGN 5/19/92	STREET, BRIDGE & R.O.W. 5/13/92
WATER QUALITY	STORM SEWERS DESIGN 5.16.92
CONSTRUCTION 5/27/92	WASTEWATER DESIGN 5/13/92
TRAFFIC & TRANSPORTATION	PLANNING & DEVELOPMENT DEPT.
ASST. DIRECTOR OF CAPITAL PROJECTS	DIRECTOR OF CAPITAL PROJECTS 6-1-92

STATE OF TEXAS
C. B. MYLIUS
19909
REGISTERED PROFESSIONAL ENGINEER
C.B. Mylius
7-8-92

NO.	DATE	REVISION	APPROV.
4			
3			
2			
1			

WEST LAKE HOUSTON PARKWAY
WEST FORK SAN JACINTO RIVER BRIDGE

BRIDGE LAYOUT
WEST LANES

4 OF 9

Turner Collie & Braden Inc.
CONSULTING ENGINEERS
TEXAS AUSTIN/DALLAS/HOUSTON/PORT ARTHUR
COLORADO DENVER

Unit	JANAK	Scale	1" = 20'-0"	Date	JULY, 1991
Designed	EDC	Checked	CM	Job No.	62-68012-020 Contract
Drawn	BST	Approved		Sheet	5 of 50

A F 39185

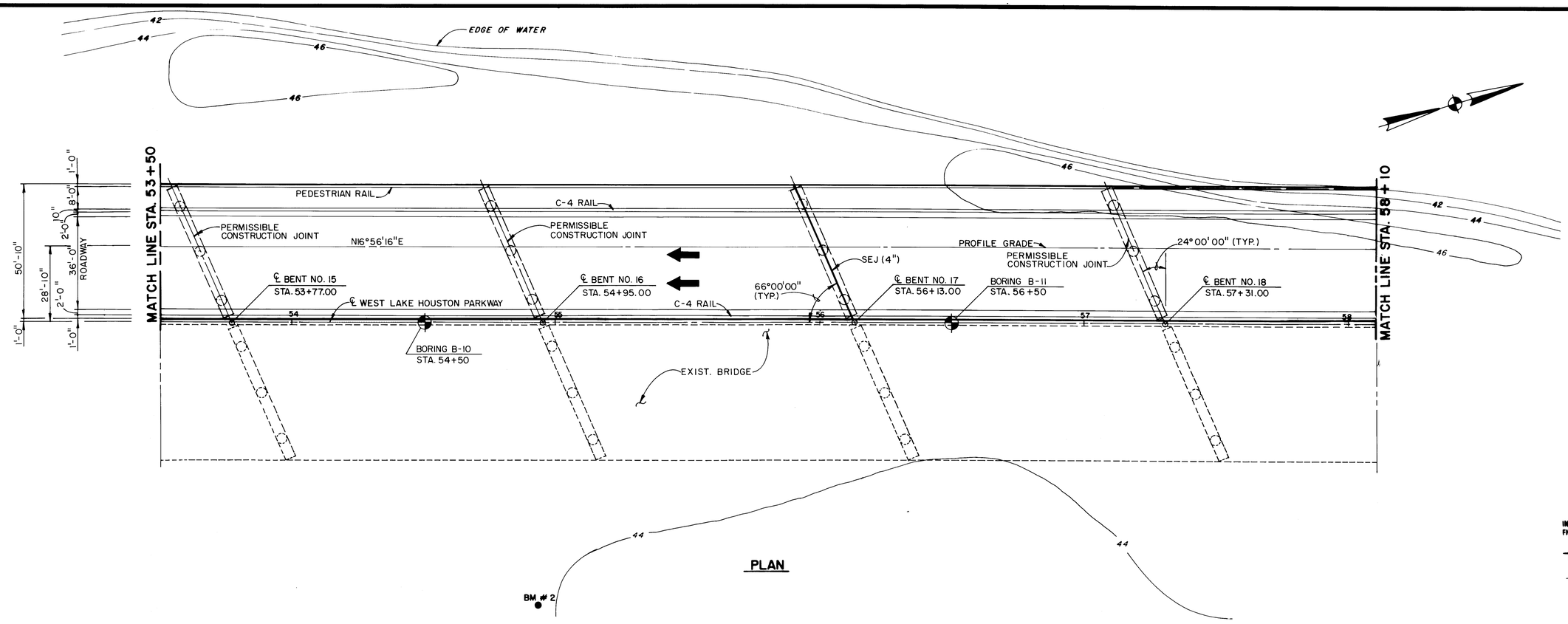

PLAN

BENCHMARK DATA

BM #2 : SET ALUMINUM CAP IN CONCRETE STA. 54+93.93, 106.07' RIGHT. EL. 43.92 (ALL ELEVATIONS ARE BASED ON NATIONAL GEODETIC VERTICAL DATUM 1964 ADJUSTMENT).

INTERPOSE NO OBJECTION
FINAL APPROVAL BY OTHERS
D.G. Parker
Harris County Flood Control District
4/2/92
Date
THE ABOVE SIGNATURE VALID FOR ONE (1) YEAR ONLY

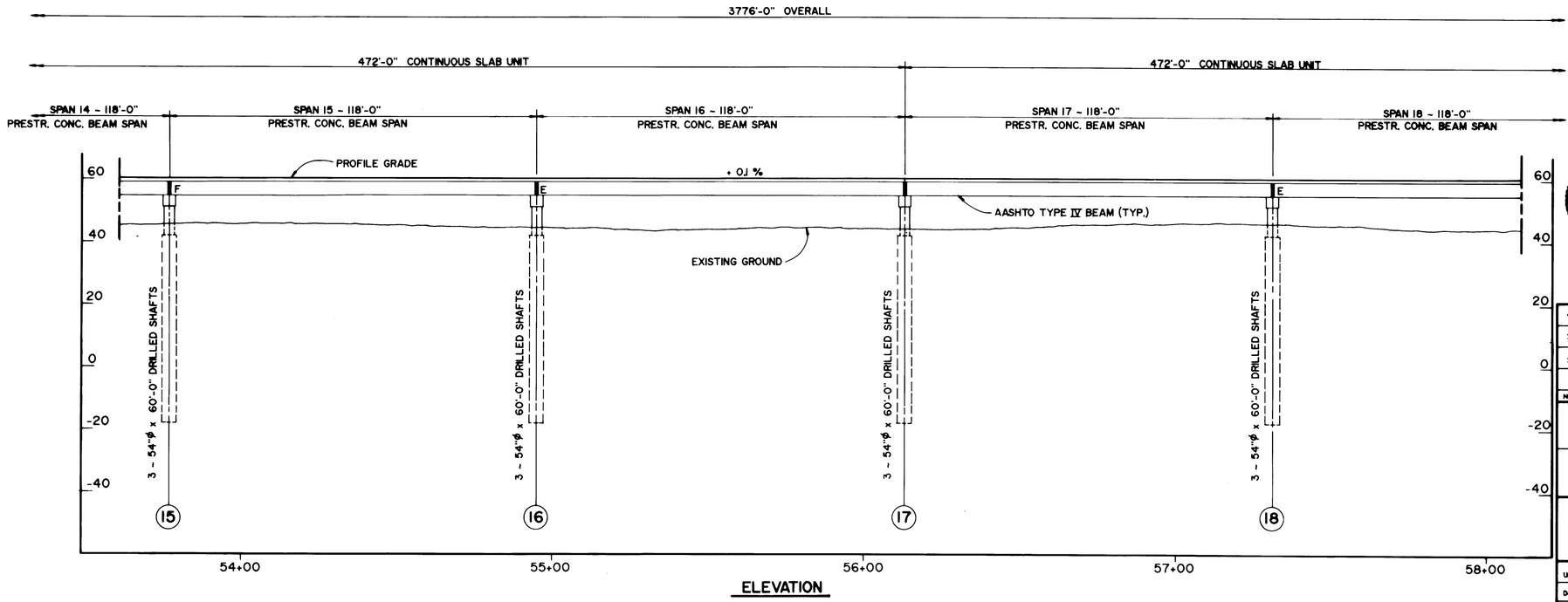

ELEVATION

CITY OF HOUSTON

APPROVALS

WATER DESIGN	STREET, BRIDGE & R.O.W.
WATER QUALITY	STORM SEWERS DESIGN
CONSTRUCTION	WASTEWATER DESIGN
TRAFFIC & TRANSPORTATION	PLANNING & DEVELOPMENT DEPT.
ASST. DIRECTOR OF CAPITAL PROJECTS	DIRECTOR OF CAPITAL PROJECTS

STATE OF TEXAS — C. B. MYLIUS — 19909 — REGISTERED PROFESSIONAL ENGINEER
C. B. Mylius
2-8-92

NO.	DATE	REVISION	APPROV.
4			
3			
2			
1			

WEST LAKE HOUSTON PARKWAY
WEST FORK SAN JACINTO RIVER BRIDGE

BRIDGE LAYOUT
WEST LANES

5 OF 9

Turner Collie & Braden Inc.
CONSULTING ENGINEERS
TEXAS AUSTIN/DALLAS/HOUSTON/PORT ARTHUR
COLORADO DENVER

Unit JANAK	Scales 1"= 20'-0"	Date JULY, 1991	
Designed EDC	Checked CM	Job No. 62-68012-020	Contract
Drawn BST	Approved	Sheet 6	of 50

AF 39185

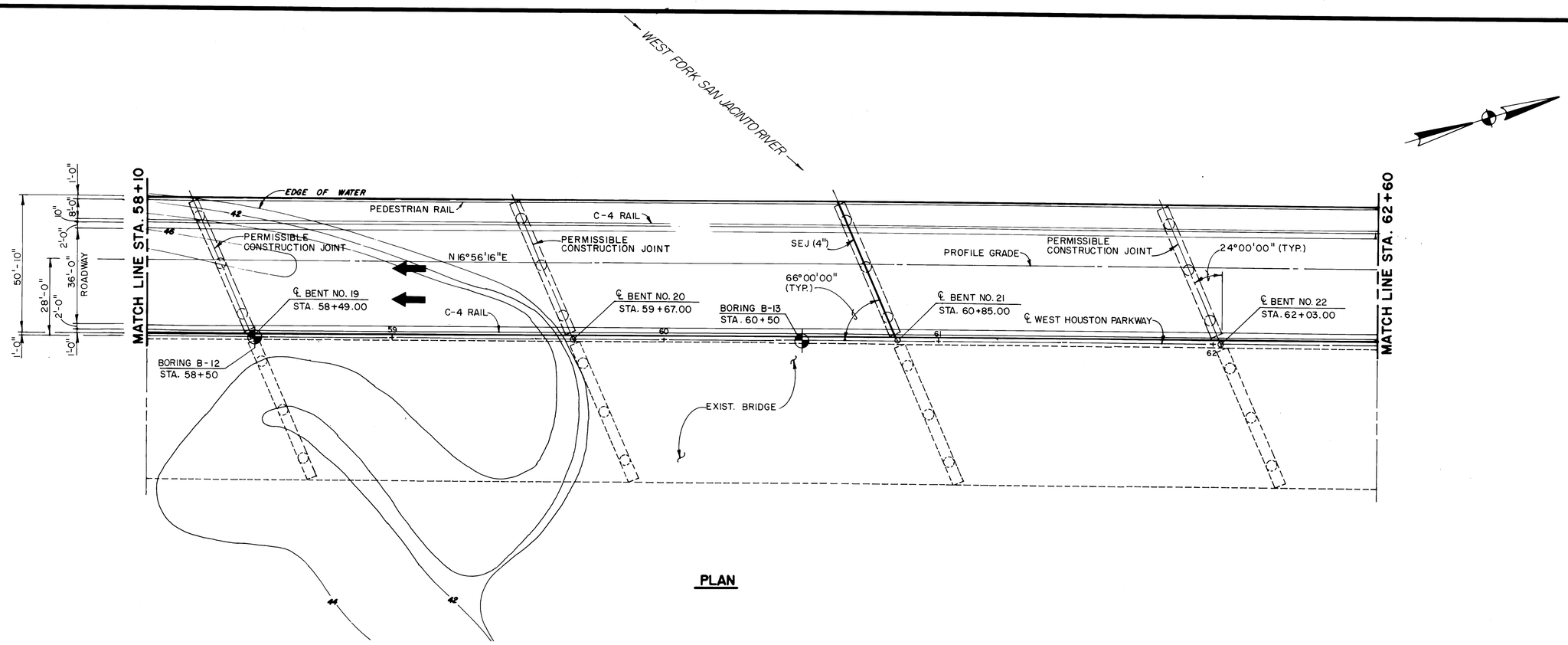

PLAN

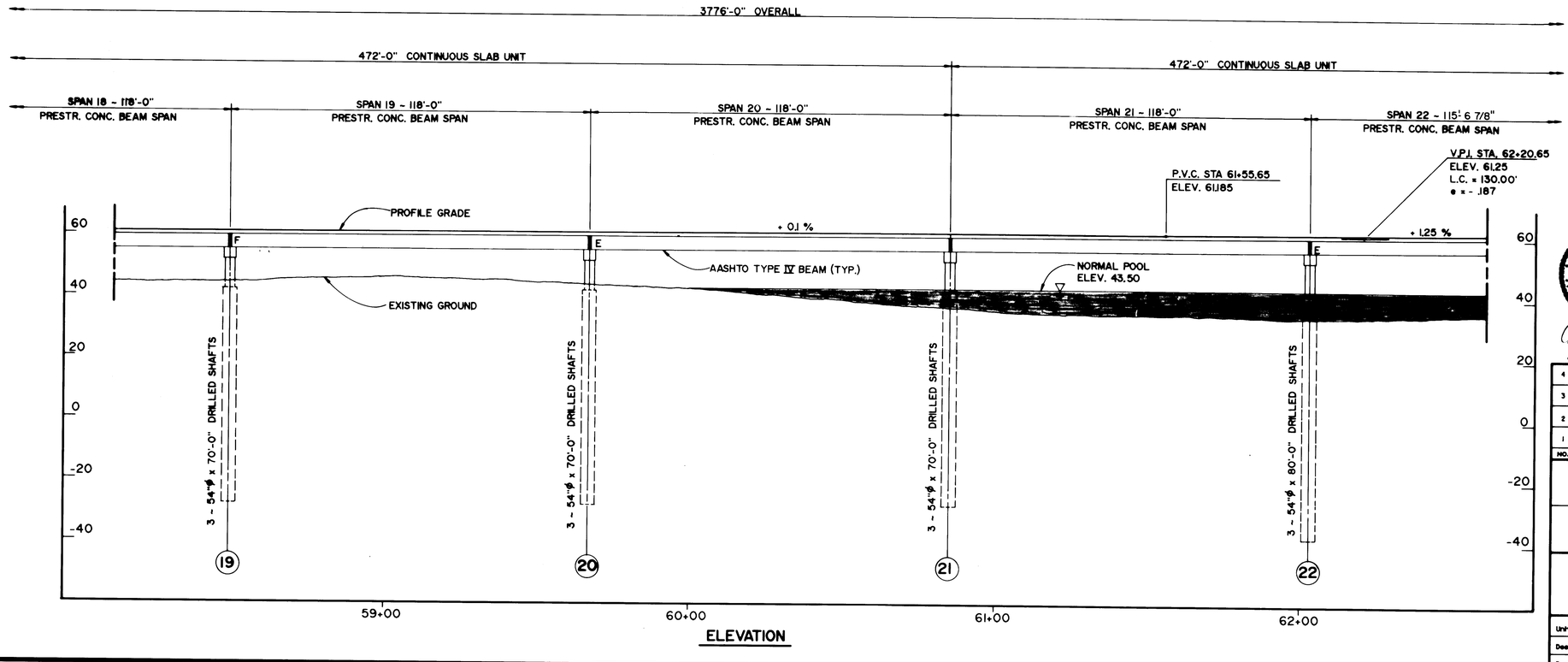

ELEVATION

INTERPOSE NO OBJECTION
FINAL APPROVAL BY OWNERS
D.A. Parker
Harris County Flood Control District
4/2/92
Date

THE ABOVE SIGNATURE VALID FOR ONE (1) YEAR ONLY

CITY OF HOUSTON

APPROVALS

WATER DESIGN — S.W. Lowry 5/19/92	STREET, BRIDGE & R.O.W. — 5/18/92
WATER QUALITY — 4/4/92	STORM SEWERS DESIGN — 5/18/92
CONSTRUCTION — 5/27/92	WASTEWATER DESIGN
TRAFFIC & TRANSPORTATION	PLANNING & DEVELOPMENT DEPT.
ASST. DIRECTOR OF CAPITAL PROJECTS — 6-1-92	DIRECTOR OF CAPITAL PROJECTS

STATE OF TEXAS
C. B. MYLIUS
19809
REGISTERED PROFESSIONAL ENGINEER
C.B. Mylius
2-4-92

NO.	DATE	REVISION	APPROV.
4			
3			
2			
1			

WEST LAKE HOUSTON PARKWAY
WEST FORK SAN JACINTO RIVER BRIDGE

BRIDGE LAYOUT
WEST LANES

6 OF 9

Turner Collie & Braden Inc.
CONSULTING ENGINEERS
TEXAS AUSTIN/DALLAS/HOUSTON/PORT ARTHUR
COLORADO DENVER

Unit JANAK	Scales 1" = 20'-0"	Date JULY, 1991	
Designed EDC	Checked CM	Job No. 62-68012-020	Contract
Drawn BST	Approved	Sheet 7	of 50

AF 39185

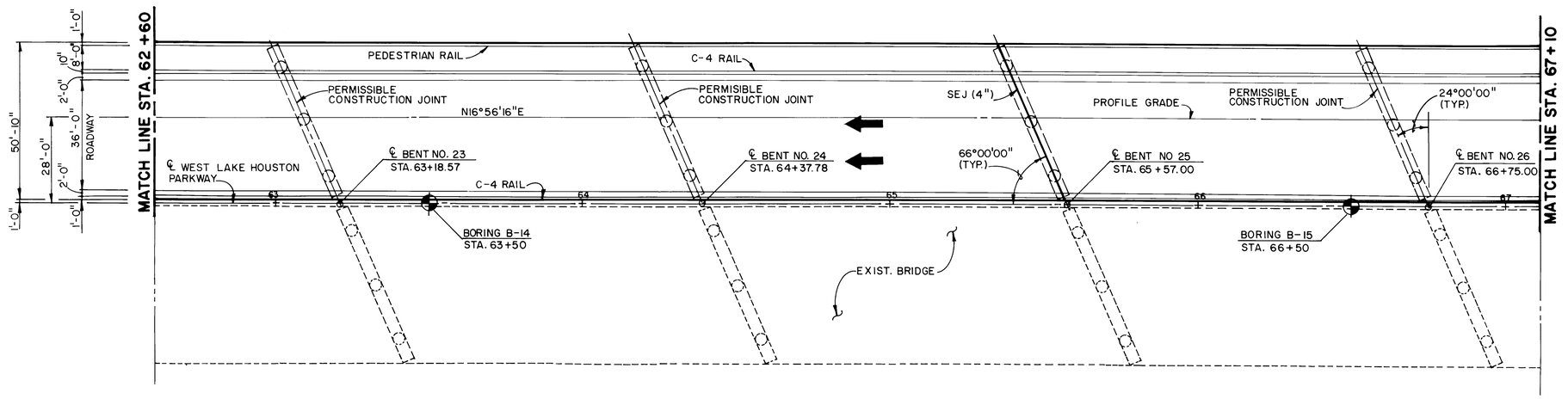

PLAN

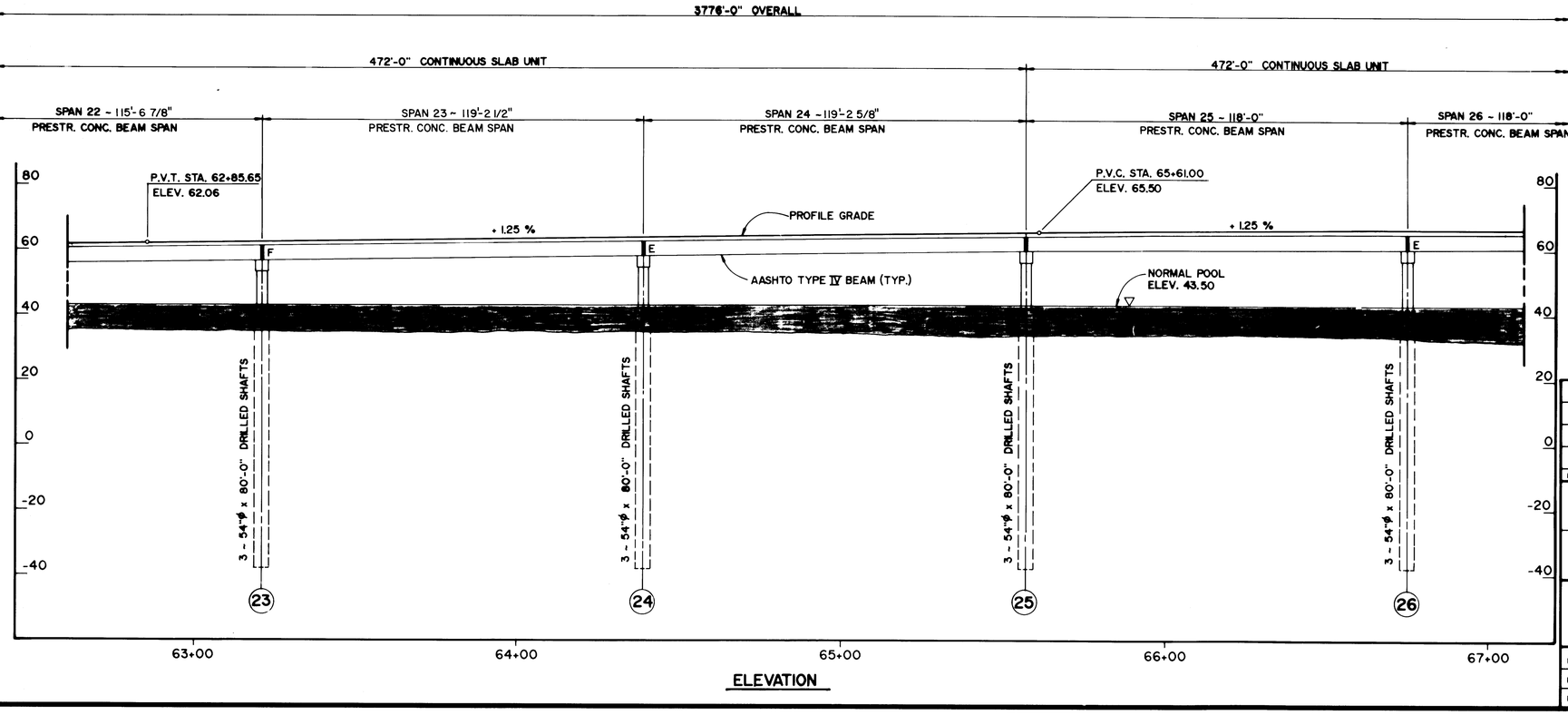

ELEVATION

INTERPOSE NO OBJECTION
FINAL APPROVAL BY OTHERS
J.A. Parker
Harris County Flood Control District
4/2/93
Date
THE ABOVE SIGNATURE VALID FOR ONE (1) YEAR ONLY

CITY OF HOUSTON
APPROVALS

WATER DESIGN		STREET, BRIDGE & R.O.W.	
WATER QUALITY		STORM SEWERS DESIGN	
CONSTRUCTION		WASTEWATER DESIGN	
TRAFFIC & TRANSPORTATION		PLANNING & DEVELOPMENT DEPT.	
ASST. DIRECTOR OF CAPITAL PROJECTS		DIRECTOR OF CAPITAL PROJECTS	

STATE OF TEXAS
C. B. MYLIUS
19909
REGISTERED PROFESSIONAL ENGINEER
C.B. Mylius
2-4-92

NO.	DATE	REVISION	APPROV.
4			
3			
2			
1			

WEST LAKE HOUSTON PARKWAY
WEST FORK SAN JACINTO RIVER BRIDGE

BRIDGE LAYOUT
WEST LANES

7 OF 9

Turner Collie & Braden Inc.
CONSULTING ENGINEERS
TEXAS: AUSTIN/DALLAS/HOUSTON/PORT ARTHUR
COLORADO: DENVER

Unit JANAK	Scales 1"= 20'-0"	Date JULY, 1991	
Designed EDC	Checked CM	Job No. 62-68012-020	Contract
Drawn BST	Approved	Sheet 8	of 50

AF 39185

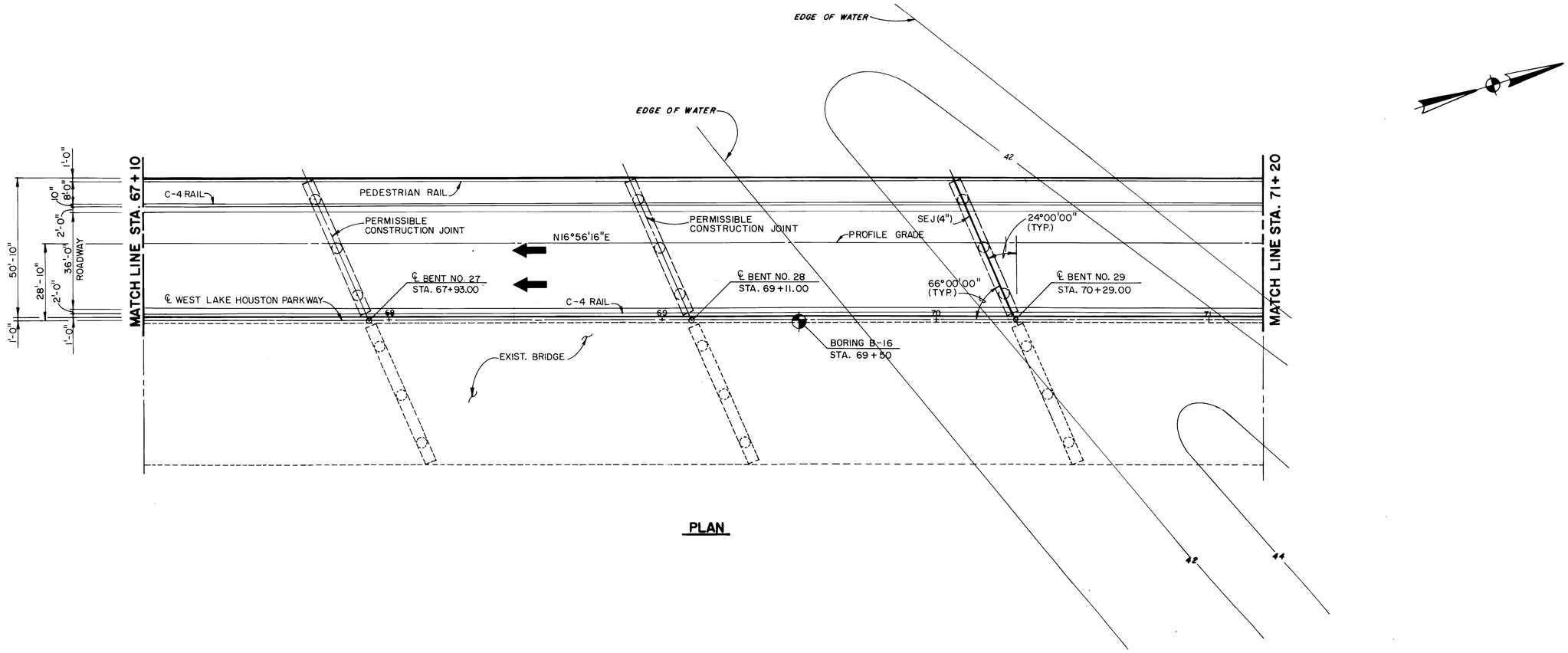

PLAN

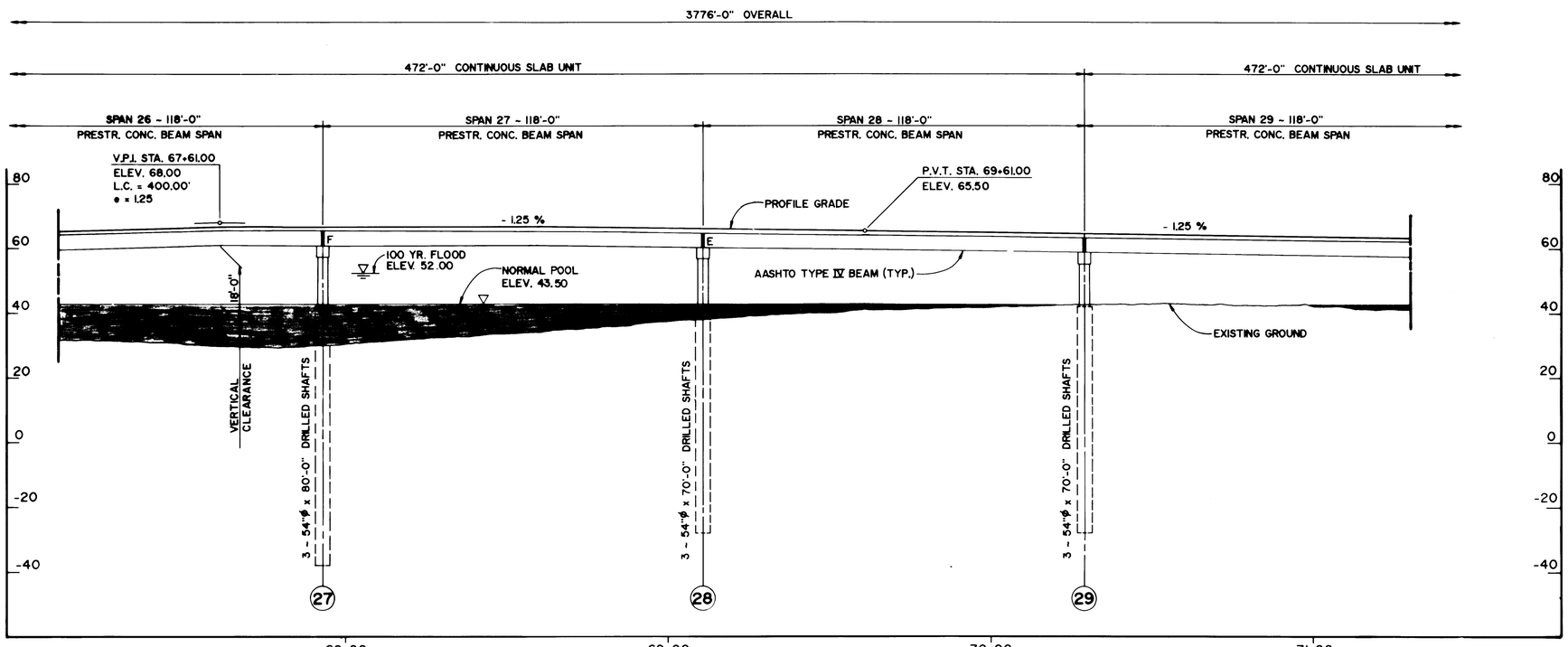

ELEVATION

INTERPOSE NO OBJECTION
FINAL APPROVAL BY OTHERS
J. A. Parker P.E.
Harris County Flood Control District
4/2/92
Date
THE ABOVE SIGNATURE VALID FOR ONE (1) YEAR ONLY

CITY OF HOUSTON

APPROVALS

WATER DESIGN	STREET, BRIDGE & R.D.W.
WATER QUALITY	STORM SEWERS DESIGN
CONSTRUCTION	WASTEWATER DESIGN
TRAFFIC & TRANSPORTATION	PLANNING & DEVELOPMENT DEPT.

ASST. DIRECTOR OF CAPITAL PROJECTS — DIRECTOR OF CAPITAL PROJECTS

E. B. MYLIUS 19909 REGISTERED PROFESSIONAL ENGINEER
2-4-92

NO.	DATE	REVISION	APPROV.
4			
3			
2			
1			

WEST LAKE HOUSTON PARKWAY
WEST FORK SAN JACINTO RIVER BRIDGE

BRIDGE LAYOUT
WEST LANES

8 OF 9

Turner Collie & Braden Inc.
CONSULTING ENGINEERS
TEXAS AUSTIN/DALLAS/HOUSTON/PORT ARTHUR
COLORADO DENVER

Unit JANAK	Scales 1"= 20'-0"	Date JULY, 1991	
Designed EDC	Checked CM	Job No. 62-68012-020 Contract	
Drawn BST	Approved	Sheet 9 of 50	

AF 39185

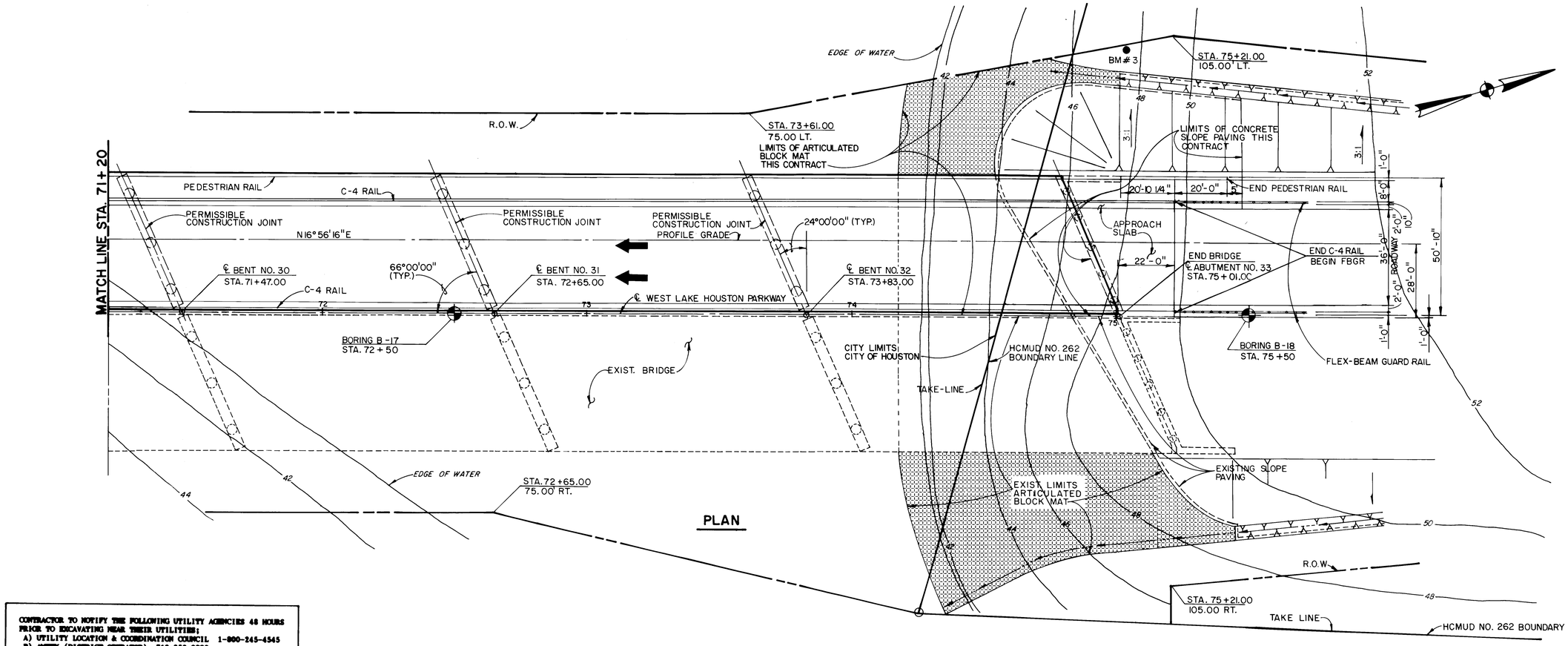

BORING B-19
STA. 77+50
(N.T.S.)

CONTRACTOR TO NOTIFY THE FOLLOWING UTILITY AGENCIES 48 HOURS PRIOR TO EXCAVATING NEAR THEIR UTILITIES;
A) UTILITY LOCATION & COORDINATION COUNCIL 1-800-245-4545
B) ARTEX (DISTRICT OPERATOR) 713-358-2828
C) ENTEX 713-654-5141
D) KINGWOOD CABLEVISION 713-358-2004
E) CENTEL 713-540-4191

INTERPOSE NO OBJECTION
FINAL APPROVAL BY OTHERS
J.A. Parker
Harris County Flood Control District
4/2/92
Date
THE ABOVE SIGNATURE VALID FOR ONE (1) YEAR ONLY

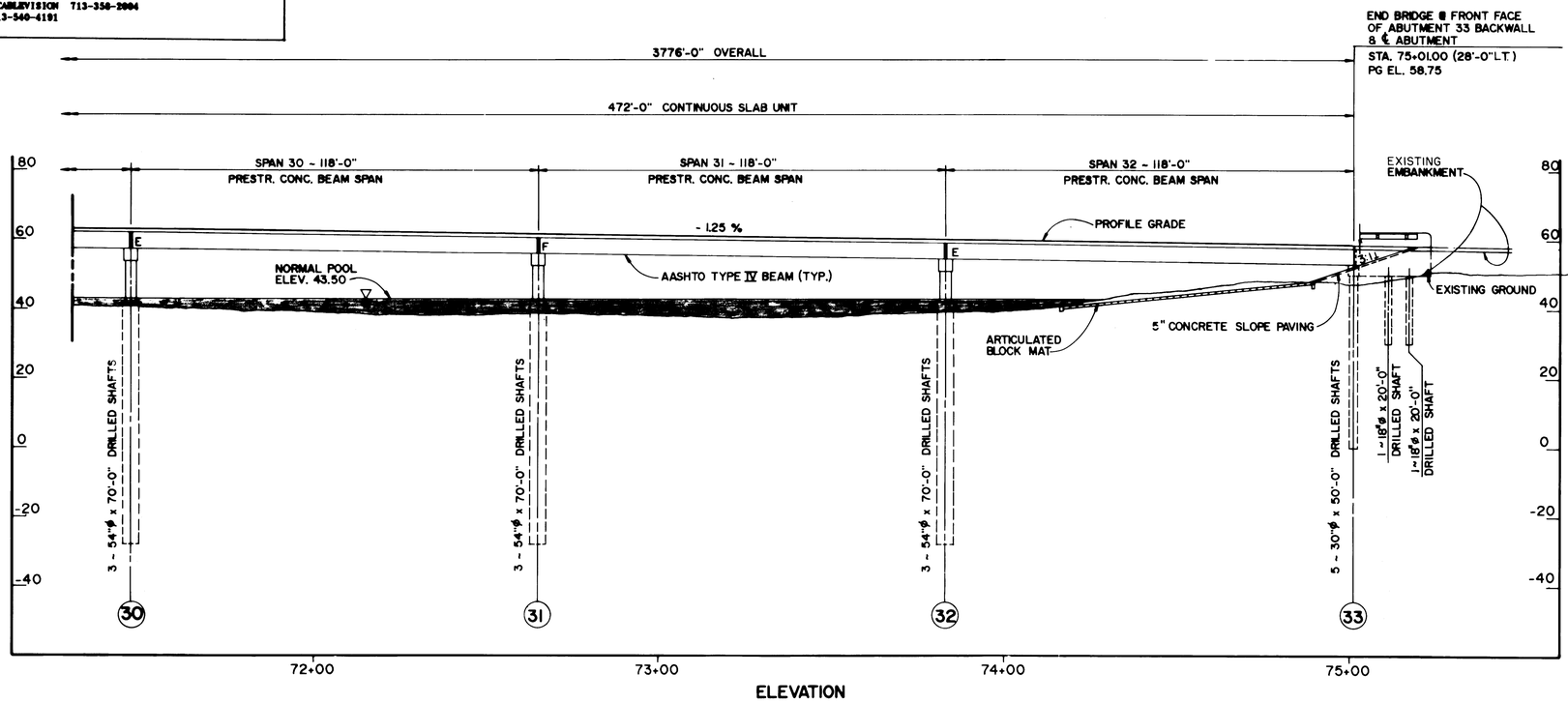

ELEVATION

BENCHMARK DATA

BM # 3: SET ALUMINUM CAP IN CONCRETE STA. 75+02.75, 100.02' LEFT. EL. 48.47 (ALL ELEVATIONS ARE BASED ON NATIONAL GEODETIC VERTICAL DATUM 1964 ADJUSTMENT).

CITY OF HOUSTON

APPROVALS

WATER DESIGN	STREET, BRIDGE & R.O.W.
WATER QUALITY	STORM SEWERS DESIGN
CONSTRUCTION	WASTEWATER DESIGN
TRAFFIC & TRANSPORTATION	PLANNING & DEVELOPMENT DEPT.
ASST. DIRECTOR OF CAPITAL PROJECTS	DIRECTOR OF CAPITAL PROJECTS

NO.	DATE	REVISION	APPROV.
4			
3			
2			
1			

WEST LAKE HOUSTON PARKWAY
WEST FORK SAN JACINTO RIVER BRIDGE

BRIDGE LAYOUT
WEST LANES

9 OF 9

STATE OF TEXAS
C. B. MYLIUS
19909
REGISTERED PROFESSIONAL ENGINEER
2-8-92

Turner Collie & Braden Inc.
CONSULTING ENGINEERS
TEXAS AUSTIN/DALLAS/HOUSTON/PORT ARTHUR
COLORADO DENVER

Unit JANAK	Scale 1" = 20'-0"	Date JULY, 1991	
Designed EDC	Checked CM	Job No. 62-68012-020	Contract
Drawn BST	Approved	Sheet 10	of 50

LOG OF BORING B-1

PROJECT: West Lake Houston Parkway Bridge, Lake Houston
SWL No. 88-224
DATE: 6-30-88 TYPE: Wet Rotary LOCATION: Sta. 36 + 50

DEPTH, FT	SYMBOL	SAMPLES	BLOWS PER 6 IN.	Description	Elevation, Feet	Pocket Pen. Reading, tsf	Moisture Content, %	Dry Density pcf	Liquid Limit	Plastic Limit	Passing #200 Sieve, %	Triaxial: Ult. Princpl. Stress, psi	Triaxial: Lateral Pressure, psi	Triaxial: Shear Strength, tsf
				Surface Elevation: 47.8'										
0				Loose gray and light gray silty fine sand	45									
5			7 7	Very stiff light gray, gray and tan clay with silty sand seams	40	2.0	16	107	41	13		41.1	0	1.48
			6											
10			13	Loose light gray silty sand	35									
15			15 16	- becomes slightly compact	30									
20			10 16											
				Stiff gray clay, with silty clay seams	25	3.5	23	100	50	21		24.6	10	0.53
			6 7	Stiff gray and light gray silty clay, with sand and clay pockets	20	4.0	22	106	27	13		29.4	15	0.52
30				- becomes very stiff		4.5+	19	111	33	16		52.8	5	1.72
					15									
35			40 60/5	Very dense gray silty sand	10									
40			16 18	- becomes slightly compact	5									
45			26 25	- becomes compact	0									
50			50/3 50/ 1.5	-becomes very dense	-5									
				Very dense gray silty sand										
55			60 50/ 5.5	- becomes dense	-10									
60			11 11	Stiff gray clay	-15	2.0 2.0	29 29	93 95	57 60	21 21		31.9 41.7	5 25	0.97 0.60
65														
70			30 35	Compact light gray sand	-20									
75			50/ 5.5 50/ 4.5	- becomes dense	-25									
80			50/3 50/4		-30									
85			50/5 50/ 5.5		-35									
90			50/2 50/ 2.5		-40									
				Boring Terminated at 90 feet	-42									

LOG OF BORING B-2

PROJECT: West Lake Houston Parkway Bridge, Lake Houston
SWL No. 88-224
DATE: 6-30-88 TYPE: Wet Rotary LOCATION: Sta. 38 + 50

DEPTH, FT	SYMBOL	SAMPLES	BLOWS PER 6 IN.	Description	Elevation, Feet	Pocket Pen. Reading, tsf	Moisture Content, %	Dry Density pcf	Liquid Limit	Plastic Limit	Passing #200 Sieve, %	Triaxial: Ult. Princpl. Stress, psi	Triaxial: Lateral Pressure, psi	Triaxial: Shear Strength, tsf
				Surface Elevation: 45.1'										
0				Compact light gray and tan silty fine sand, with roots							14			
5			22 20		40									
10			22 19		35									
15			14 14	- becomes slightly compact	30									
20				Stiff gray, tan and red-brown clay - slickensided, with calcareous nodules	25	2.8	30	93	65	27		36.7	15	0.78
25			10 12	Firm gray and light gray silty clay with clay pockets, slickensided	20	1.5	19	108	27	12		20.4	10	0.38
30				Slightly compact tan silty fine sand	15									
35			13 16		10									
40			20 24	- becomes compact	5									
45			50/3 50/3	- becomes dense	0									
50			13 13	- becomes slightly compact	-5									
				Slighthly compact tan silty fine sand										
55			10 13	- with clay layer	-10									
60			7 9	Stiff gray sandy clay	-15	1.25	18	112	28	12		30.3	10	0.73
65				- with fine sand pockets	-20	1.0	17	114	23	13		38.9	25	0.5
70			35 34	Compact light gray silty fine sand	-25									
75			50 50/4	- becomes dense	-30									
80			50/4 50/3		-35									
85			50/5 50		-40									
90			50/3 50/ 3.5		-45									

LOG OF BORING B-3

PROJECT: West Lake Houston Parkway Bridge, Lake Houston
SWL No. 88-224
DATE: 7-8-88 TYPE: Wet Rotary LOCATION: Sta. 40 + 50

DEPTH, FT	SYMBOL	SAMPLES	BLOWS PER 6 IN.	Description	Elevation, Feet	Pocket Pen. Reading, tsf	Moisture Content, %	Dry Density pcf	Liquid Limit	Plastic Limit	Passing #200 Sieve, %	Triaxial: Ult. Princpl. Stress, psi	Triaxial: Lateral Pressure, psi	Triaxial: Shear Strength, tsf
				Surface Elevation: 45.0'										
0				Loose gray sand, with roots										
5			6 6		40									
				Soft gray and tan silty clay		0.25	16	114	24	17		3.8	0	0.14
10			10 12	Slightly compact light gray silty sand	35									
15			12 11		30									
20			17 14	Stiff gray clay	25									
				Stiff gray silty clay		1.3 2.0	19	109	25	17		13.8	0	0.48
25			8 16		20	2.5								
30			12 11	- becomes very stiff	15	4.25	22	106	43	18		50.4	0	1.82
35				-becomes stiff	10	0.8 0.5 0.5 2.0 1.0	29 25	95 102	36 27	16 20		37.1 16.5	20 5	0.62 0.42
40			40 50/ 5.5	Dense light gray sand	5									
45			23 42	- becomes compact	0									
50			15 10	Gray silty sand w/soft clay layer	-5									
				Gray silty sand w/soft clay layer		0.5	24	102	27	12		4.3	0	0.16
55			10 11	Slightly compact light gray coarse sand	-10									
60				Firm gray clay		1.0	35	87	66	24		11.0	0	0.40
				- becomes stiff	-15	1.0	35	87	65	27		47.4	30	0.63
65				Dense to very dense light gray sand	-20									
70			50/ 4.5 50/4		-25									
75			50/4 50/ 3.5		-30									
80			50/3 50/ 3.5		-35									
85			50/ 2.5 50/3		-40									
90			50/3 50/ 0.5		-45									
				Boring Terminated at 90 feet										

LOG OF BORING B-4

PROJECT: West Lake Houston Parkway Bridge, Lake Houston
SWL No. 88-224
DATE: 7-10-88 TYPE: Wet Rotary LOCATION: Sta. 42 + 50

DEPTH, FT	SYMBOL	SAMPLES	BLOWS PER 6 IN.	Description	Elevation, Feet	Pocket Pen. Reading, tsf	Moisture Content, %	Dry Density pcf	Liquid Limit	Plastic Limit	Passing #200 Sieve, %	Triaxial: Ult. Princpl. Stress, psi	Triaxial: Lateral Pressure, psi	Triaxial: Shear Strength, tsf
				Surface Elevation: 46.7'										
0				Loose gray silty fine sand, with roots	45									
5			5 5		40									
10			22 20	- becomes compact	35									
15			20 20		30									
20			10 12	Very stiff gray and tan silty clay	25	3.3	21	105	47	19		52.4	15	1.35
				- color change to gray		2.0	20	108	46	17		40.8	5	1.29
25					20									
30			10 12		15									
35				- becomes firm and color change gray and tan	10	0.8	24	99	36	18		10.7	0	0.39
40			45 50	Dense light gray sand	5									
45			50 50/5		0									
50			50/3 50/1	- becomes very dense	-5									
				Very dense light gray sand										
55			50/4 50/ 2.5		-10									
60			9 10	Stiff light gray clay - with sand layer at 60 feet	-15	0.8	18	113	22	19		13.8	0	0.49
65				Dense light gray sand	-20									
70			40 50		-25									
75			30 35	- becomes compact	-30									
80			50 50/5	- becomes dense	-35									
85			50/ 5.5 50/4		-40									
90			50/ 3.5 50/ 2.5		-45									
				Boring Terminated at 90 feet										

Prepared by
Southwestern Laboratories
Geotechnical Engineering Division
Houston, Texas

NO.	DATE	REVISION	APPROV.
4			
3			
2			
1			

WEST LAKE HOUSTON PARKWAY
WEST FORK SAN JACINTO RIVER BRIDGE

BORING LOG INFORMATION

1 OF 5

Turner Collie & Braden Inc.
ENGINEERS • PLANNERS

Unit JANAK	Scale: N.T.S.	Date DECEMBER, 1991
Designed	Checked	Job No. 62-68012-02-0 Contract
Drawn	Approved	Sheet 11 of 50

319853

LOG OF BORING B-5

PROJECT: West Lake Houston Parkway Bridge, Lake Houston
SWL No. 88-224
DATE: 7-13-88 TYPE: Wet Rotary LOCATION: Sta. 44 + 50

DEPTH, FEET	BLOWS PER 6 IN.	Description	Elevation, feet	Pocket Pen. Reading, tsf	Moisture Content, %	Dry Density pcf	Liquid Limit	Plastic Limit	Passing #200 Sieve, %	Triaxial Ult. Princip. Stress, psi	Triaxial Lateral Pressure, psi	Triaxial Shear Strength, tsf
0		Surface Elevation: 46.1'										
		Light gray silty fine sand, with roots										
5	7 8	light gray and brown silty sand with soft clay seams	40	0.3	19	114	20	20		6.3	0	0.23
10	12 16	Slightly compact light gray sand	35									
15	15 23		30									
20	17 21	Very stiff gray clay, slickensided	25	4.0	29	97	58	23		52.5	20	1.17
25	10 12	Stiff gray silty clay with silt pockets	20	2.5	20	109	49	16		19.7	5	0.53
30	50/5 50	Dense light gray sand	15									
35	21 17	- becomes compact	10									
40	27 30		5									
45	23 21		0									
50	50/2 50/2	Compact light gray sand - becomes very dense	-5 -10									
55	50/3 50/ 3.5	- becomes dense	-15									
60	50/4 50/3		-20									
65	20 13	- becomes slightly compact	-25									
70	12 12	Stiff gray clay	-30	1.0	44	75	72	25		17.9	0	0.65
75	12 15	Slightly compact light gray sand	-35									
80	10 13	- with clay layer	-40									
85	30 35	- becomes compact	-44									
90		Boring Terminated at 90 feet										

LOG OF BORING B-6

PROJECT: West Lake Houston Parkway Bridge, Lake Houston
SWL No. 88-224
DATE: 7-15-88 TYPE: Wet Rotary LOCATION: Sta. 46 + 50

DEPTH, FEET	BLOWS PER 6 IN.	Description	Elevation, feet	Pocket Pen. Reading, tsf	Moisture Content, %	Dry Density pcf	Liquid Limit	Plastic Limit	Passing #200 Sieve, %	Triaxial Ult. Princip. Stress, psi	Triaxial Lateral Pressure, psi	Triaxial Shear Strength, tsf
0		Surface Elevation: 46.5'										
	10 11	Slightly compact gray silty fine sand	40									
5	30 32	- becomes compact	35									
10	20 23		30									
15	10 12	Stiff red-brown, tan and gray clay, slickensided	30	4.5	30	95	54	22		40.3	20	1.23
20		- becomes very stiff	25	3.5	30	96	58	23		37.9	5	1.18
25		- becomes stiff		2.3	30	94	58	24		33.2	10	0.84
30	15 20	Slightly compact light gray sand	20									
35	19 28	- becomes compact	15									
40	20 25		10									
45	25 33		5									
50	50/4 50/3	Compact light gray sand - becomes dense	0 -5									
55	11 12	Stiff gray clay	-10									
60			-15									
65		- becomes slickensided	-20	2.3	31	91	67	26		34.9	5	1.08
70	45 50	- becomes firm Dense tan sand		1.8	36	86	70	26		32.1	20	0.44
75	50/4 50/3		-25									
80	50/5 50/4		-30									
85	50 45		-35									
90	40 30	- becomes compact	-40									
		Boring Terminated at 90 feet	-43									

LOG OF BORING B-7

PROJECT: West Lake Houston Parkway Bridge, Lake Houston
SWL No. 88-224
DATE: 7-18-88 TYPE: Wet Rotary LOCATION: Sta. 48 + 50

DEPTH, FEET	BLOWS PER 6 IN.	Description	Elevation, feet	Pocket Pen. Reading, tsf	Moisture Content, %	Dry Density pcf	Liquid Limit	Plastic Limit	Passing #200 Sieve, %	Triaxial Ult. Princip. Stress, psi	Triaxial Lateral Pressure, psi	Triaxial Shear Strength, tsf
0		Surface Elevation: 47.0'										
		Loose tan silty fine sand										
5		Very stiff light gray and red-brown sandy clay	40	4.0	19	111	49	16		49.3	0	1.78
10	25 30	Compact light gray sand	35									
15	35 45	- becomes dense	30									
20	12 13	Stiff brown, tan and gray clay, slickensided	25	3.3	35	90	65	25		25.0	5	0.72
25		Stiff gray silty clay	20	2.3	28	98	47	24		22.6	0	0.82
30	6 13	Dense tan sand	15									
35	48 50/5		10									
40	11 27	- becomes slightly compact	5									
45	35 34	- becomes compact	0									
50	33 33	Compact tan sand	-5									
55	50/5 50/ 2.5	- becomes dense	-10									
60	50/4 50/3		-15									
65	8 12	Stiff clay layer										
70	50/3 50/2	Very dense tan sand	-20									
75	50/2 50/ 2.5		-25									
80	50/ 2.5 50/2		-30									
85	50/2 50/2		-35									
90	50/ 2.5 50/2		-40									
		Boring Terminated at 90 feet	-43									

LOG OF BORING B-8

PROJECT: West Lake Houston Parkway Bridge, Lake Houston
SWL No. 88-224
DATE: 7-19-88 TYPE: Wet Rotary LOCATION: Sta. 50 + 50

DEPTH, FEET	BLOWS PER 6 IN.	Description	Elevation, feet	Pocket Pen. Reading, tsf	Moisture Content, %	Dry Density pcf	Liquid Limit	Plastic Limit	Passing #200 Sieve, %	Triaxial Ult. Princip. Stress, psi	Triaxial Lateral Pressure, psi	Triaxial Shear Strength, tsf
0		Surface Elevation: 45.9'										
	11 13	Slightly compact light gray silty sand	40									
5	15 12		35									
10	12 7		30									
15	8 9	Very stiff gray silty clay	25	2.8	19	110	33	14		40.4	0	1.46
20				4.3	19	110	34	14		49.3	20	1.06
25			20	3.0	18	111	36	16		38.3	10	1.02
30	50/ 5.5 50/ 4.5	Dense tan sand	15									
35	25 30	- becomes compact	10									
40	50/ 1.5 50/2	- becomes very dense	5									
45	50/3 50/3	- becomes dense	0									
50	50/ 3.5 50/3	Dense tan sand	-5									
55	50/2 50/2	- becomes very dense	-10									
60	50/3 50/ 3.5		-15									
65	50/5 50/4	- becomes dense	-20									
70	50 50/5		-25									
75	50/3 50/ 2.5		-30									
80	50/ 3.5 50/4		-35									
85	50/4 50/4		-40									
90	50/ 2.5 50/5		-44									
		Boring Terminated at 90 feet										

Prepared by
Southwestern Laboratories
Geotechnical Engineering Division
Houston, Texas

NO.	DATE	REVISION	APPROV.
4			
3			
2			
1			

WEST LAKE HOUSTON PARKWAY
WEST FORK SAN JACINTO RIVER BRIDGE

BORING LOG INFORMATION

2 OF 5

Turner Collie & Braden Inc.
ENGINEERS • PLANNERS

Unit JANAK	Scale: NTS	Date DECEMBER, 1991
Designed	Checked	Job No. 52-68012020 Contract
Drawn	Approved	Sheet 12 of 50

311693

LOG OF BORING B-9

PROJECT: West Lake Houston Parkway Bridge, Lake Houston
SWL No. 88-224
DATE: 7-22-88 TYPE: Wet Rotary LOCATION: Sta. 52 + 50

Surface Elevation: 44.9'

DEPTH, FEET	SAMPLES BLOWS PER 6 IN.	Description	Elevation, feet	Pocket Pen. Reading, tsf	Moisture Content, %	Dry Density pcf	Liquid Limit	Plastic Limit	Passing #200 Sieve, %	Triaxial Ult. Princpl. Stress, psi	Triaxial Lateral Pressure, psi	Triaxial Shear Strength, tsf
0		Loose light gray silty fine sand										
5	5 10		40									
10	6 7	Firm light gray and tan sandy clay, with silty sand layers and seams	35	0.8	16	113	25	15		10.7	0	0.38
15	31 31	Compact light gray sand	30									
20	6 5	Stiff brown and gray clay, slickensided	25	2.0	34	89	68	28		16.0	0	0.58
				2.0	20	106	49	17		36.5	20	0.59
25		Very stiff gray sandy clay	20	4.3	20	111	31	18		38.9	10	1.04
30	33 50/3	Dense tan silty fine sand	15									
35	38 41		10									
40	50/4 50/ 4.5		5									
45	50/ 3.5 50/ 2.5		0									
50	50/3 50/ 1.5	-becomes very dense	-5									
		Very dense tan silty fine sand										
55	50/ 3.5 50/ 4.5	-becomes dense	-10									
60	12 15	Clay layer	-15									
65	50 50/5	Dense light gray sand	-20									
70	50/3 50/2	-becomes very dense	-25									
75	50/4 50/ 4.5	-becomes dense	-30									
80	50 50/4		-35									
85	50/ 3.5 50/5		-40									
90	16 16	Stiff gray clay	-45									
		Boring Terminated at 90 feet										

LOG OF BORING B-10

PROJECT: West Lake Houston Parkway Bridge, Lake Houston
SWL No. 88-224
DATE: 7-25-88 TYPE: Wet Rotary LOCATION: Sta. 54 + 50

Surface Elevation: 45.4'

DEPTH, FEET	SAMPLES BLOWS PER 6 IN.	Description	Elevation, feet	Pocket Pen. Reading, tsf	Moisture Content, %	Dry Density pcf	Liquid Limit	Plastic Limit	Passing #200 Sieve, %	Triaxial Ult. Princpl. Stress, psi	Triaxial Lateral Pressure, psi	Triaxial Shear Strength, tsf
0		Loose gray silty fine sand, with roots										
5	6 6		40									
10	14 12	Gray sandy clay	35									
15	10 10	Slightly compact sand	30									
20	7 8	Very stiff bluish gray and brown clay	25	4.0	27	100	52	22		48.8	5	1.58
		- color change to gray		2.8	3.0	97	51	19		52.4	20	1.17
25			20									
30	8 42	Compact light gray silty fine sand	15									
35	35 40		10									
40	34 37		5									
45	50 50/ 5.5	- becomes dense	0									
50	50/5 50/ 5.5		-5									
		Dense light gray silty fine sand										
55	50/5 50/4		-10									
60	12 12	Stiff clay	-15									
65	50 50	Dense tan sand	-20									
70	50/ 5.5 50/ 2.5		-25									
75	50/4 50/3		-30									
80	50/5 50/ 3.5		-35									
85	50/ 5.5 50/ 4.5		-40									
90	12 14	Stiff gray clay	-45									
		Boring Terminated at 90 feet										

LOG OF BORING B-11

PROJECT: West Lake Houston Parkway Bridge, Lake Houston
SWL No. 88-224
DATE: 7-26-88 TYPE: Wet Rotary LOCATION: Sta. 56 + 50

Surface Elevation: 43.0'

DEPTH, FEET	SAMPLES BLOWS PER 6 IN.	Description	Elevation, feet	Pocket Pen. Reading, tsf	Moisture Content, %	Dry Density pcf	Liquid Limit	Plastic Limit	Passing #200 Sieve, %	Triaxial Ult. Princpl. Stress, psi	Triaxial Lateral Pressure, psi	Triaxial Shear Strength, tsf
0		Loose light gray silty fine sand	40									
5	5 6	Firm light gray and tan clay										
10	15 15	Slightly compact light gray sand	35									
15	10 15	- with gravel	30 25									
20	10 11	Stiff light gray clayey silty sand, with clay layers	20	1.0	17	116	25	16		19.6	5	0.51
25		Stiff gray silty clay		2.0	18		48	15				
		Stiff light gray clayey sand		2.0	18	113	24	20		34.6	15	0.72
30	24 29	Compact light gray silty fine sand	15 10									
35	30 40		5									
40	45 50	- becomes dense	0									
45	50/5 50/ 4.5		-5									
50	50/4 40	Dense light gray silty fine sand	-10									
55	50/ 5.5 50/5											
60	12 12	Stiff clay	-15									
65	50 50/5	Dense light gray sand	-20									
70	50/5 50/ 4.5		-25									
75	50/ 3.5 50/3		-30									
80	50/3 50/1		-35									
85	50/2 50/3		-40									
90	12 14	-becomes slightly compact	-45 -47									
		Boring Terminated at 90 feet										

LOG OF BORING B-12

PROJECT: West Lake Houston Parkway Bridge, Lake Houston
SWL No. 88-224
DATE: 7-29-88 TYPE: Wet Rotary LOCATION: Sta. 58 + 50

Surface Elevation: 44.2'

DEPTH, FEET	SAMPLES BLOWS PER 6 IN.	Description	Elevation, feet	Pocket Pen. Reading, tsf	Moisture Content, %	Dry Density pcf	Liquid Limit	Plastic Limit	Passing #200 Sieve, %	Triaxial Ult. Princpl. Stress, psi	Triaxial Lateral Pressure, psi	Triaxial Shear Strength, tsf
0		Loose light gray sand										
5	7 6		40									
10	5 6		35									
15	6 6		30									
20	SPT 7 BPF	- becomes silty	25									
25	7 8		20									
30	8 8		15									
35	9 11	- becomes slightly compact	10									
40	SPT 23 BPF		5									
45	50 50/ 5.5	- becomes dense	0									
50	50/5 50/ 2.5	Dense light gray sand	-5									
55	50/4 50/3		-10									
60	SPT 26 BPF	-becomes coarse	-15									
65	50/5 50/4		-20									
70	50/ 4.5 50/3		-25									
75	50/ 2.5 50/2		-30									
80	SPT 44 BPF		-35									
85	50/ 3.5 50/3		-40									
90	50/2 50/ 1.5		-46									
		Boring Terminated at 90 feet										

Prepared by
Southwestern Laboratories
Geotechnical Engineering Division
Houston, Texas

NO.	DATE	REVISION	APPROV.
4			
3			
2			
1			

WEST LAKE HOUSTON PARKWAY
WEST FORK SAN JACINTO RIVER BRIDGE

BORING LOG INFORMATION

3 OF 5

Turner Collie & Braden Inc.
ENGINEERS • PLANNERS

Unit JANAK	Scale: N.T.S.	Date DECEMBER, 1991
Designed	Checked	Job No. 62-68012-020 Contract
Drawn	Approved	Sheet 13 of 50

LOG OF BORING B-13

PROJECT: West Lake Houston Parkway Bridge, Lake Houston
SWL No. 88-224
DATE: 7-27-88 TYPE: Wet Rotary LOCATION: Sta. 60 + 50

Surface Elevation: 39.6'

DEPTH, FIET	SAMPLES	BLOWS PER 6 IN.	Description	Elevation, feet
0			Very loose light gray sand	
5		4 2		35
10		2 1		30
15		9 7	- becomes loose	25
20		13 10	- becomes slightly compact	20
25		13 18		15
30		8 20	- with clay layer at 29 to 29.5 feet	10
35		28 50/5	- becomes dense	5
40		45 50		0
45		50/6 50/5		-5
50		40 20	- becomes compact	-10
			Compact light gray sand	
55		50/ 3.5 50/3	- becomes dense	-15
60		50/2 50/ 2.5		-20
65		50/5 50/4		-25
70		50/4 50/ 3.5		-30
75		50/ 2.5 50/2	- becomes very dense	-35
80		50/3 50/ 0.5		-40
85		50/ 2.5 50/2		-45
90		50/ 2.5 50/3	Boring Terminated at 90 feet	-50

LOG OF BORING B-14

PROJECT: West Lake Houston Parkway Bridge, Lake Houston
SWL No. 88-224
DATE: 8-17-88 TYPE: Wet Rotary LOCATION: Sta. 63 + 50

Mudline Elevation: 34.9'

DEPTH, FIET	SAMPLES	BLOWS PER 6 IN.	Description	Elevation, feet
0		2 2	Very loose tan sand	
5		3 4		30
10		5 5		25
15		7 12	- becomes loose	20
20		8 7		15
25		10 12	- becomes slightly compact	10
30		14 17		5
35		20 24	- becomes compact	0
40		24 29		-5
45		30 29		-10
50		25 28	Compact tan sand	-15
55		32 35		-20
60		37 38		-25
65		40 43	- becomes dense	-30
70		45 50		-35
75		50/5 50/5		-40
80		50/5 50/4		-45
85		50/4 50/4		-50
90		50/4 50/3	Boring Terminated at 90 feet	-55

Mudline approximately 9.5 feet below water level of lake.

LOG OF BORING B-15

PROJECT: West Lake Houston Parkway Bridge, Lake Houston
SWL No. 88-224
DATE: 8-16-88 TYPE: Wet Rotary LOCATION: Sta. 66 + 50

Mudline Elevation: 33.6'

DEPTH, FIET	SAMPLES	BLOWS PER 6 IN.	Description	Elevation, feet
0			Very loose tan sand	
5		1 2		30
10		3 3		25
15		5 4		20
20		10 15	- becomes slightly compact	15
25		8 13		10
30		23 27	- becomes compact	5
35		33 42		0
40		23 32		-5
45		48 50/5	- becomes dense	-10
50		13 16	- becomes slightly compact, with thin layers of gray clay	-15
			Slightly compact tan sand	
55		16 22		-20
60		18 31	- becomes compact	-25
65		40 42		-30
70		48 50/5	- becomes dense	-35
75		30 38	- becomes compact	-40
80		50/5 50/4	- becomes dense	-45
85		50/5 50/3		-50
90		50/3 50/3	Boring Terminated at 90 feet	-56

Mudline approximately 8 feet below water leval of lake.

LOG OF BORING B-16

PROJECT: West Lake Houston Parkway Bridge, Lake Houston
SWL No. 88-224
DATE: 8-9-88 TYPE: Wet Rotary LOCATION: Sta. 69 + 50

Surface Elevation: 40.2'

DEPTH, FIET	SAMPLES	BLOWS PER 6 IN.	Description	Elevation, feet
0		1 1"	Very loose tan fine sand	
5		1 1	- becomes slightly clayey	35
10		3 2		30
15		6 7	- becomes loose	25
20		12 21	- becomes slightly compact	20
25		14 28		15
30		18 13		10
35		10 9		5
40		11 13		0
45		40 30	- becomes compact	-5
50		42 48	- becomes dense	-10
			Dense tan fine sand	
55		50 50/2		-15
60		50/5 50/4		-20
65		50/4 50/4		-25
70		50/4 50/5		-30
75		50 50/5		-35
80		50/4 50/4		-40
85		50/3 50/2	- becomes very dense	-45
90		50/2 50/2	Boring Terminated at 90 feet	-50

Prepared by
Southwestern Laboratories
Geotechnical Engineering Division
Houston, Texas

NO.	DATE	REVISION	APPROV.
4			
3			
2			
1			

WEST LAKE HOUSTON PARKWAY
WEST FORK SAN JACINTO RIVER BRIDGE

BORING LOG INFORMATION

4 OF 5

Turner Collie & Braden Inc.
ENGINEERS • PLANNERS

Unit JANAK	Scale: N.T.S.	Date DECEMBER, 1991
Designed	Checked	Job No. 62-68012-020 Contract
Drawn	Approved	Sheet 14 of 50

311803

LOG OF BORING B-17

PROJECT: West Lake Houston Parkway Bridge, Lake Houston
Project No. 88-224
DATE: 8-11-88 TYPE: Wet Rotary LOCATION: Sta. 72 + 50

DEPTH, FEET	SAMPLES	BLOWS PER 6 IN.	Description	Elevation, Feet	Pocket Pen. Reading, tsf	Moisture Content, %	Dry Density pcf	Liquid Limit	Plastic Limit	Passing #200 Sieve, %	Triaxial: Ult. Princ. Stress, psi	Triaxial: Lateral Pressure, psi	Triaxial: Shear Strength, tsf
0			Mudline Elevation: 39.2'										
		4	Very loose tan fine sand										
5		4		35									
		3											
10		4		30									
		10											
15		10	- becomes slightly compact	25									
		12											
20		12		20									
		10											
25		15		15									
		15											
30		18		10									
		18	- becomes compact										
35		25		5									
		22											
40		24		0									
		50/5	- becomes dense										
45		50/5		-5									
		50/5											
50		50/5		-10									
			Dense tan fine sand										
55		50/4		-15									
		50/5											
60		50/4		-20									
		50/3											
65		40		-25									
		46											
70		50/5		-30									
		50/4											
75		25	- becomes compact	-35									
		25											
80		49	- becomes dense	-40									
		50/5											
85		50/5		-45									
		50/5											
90		50/4		-51									
			Boring Terminated at 90 feet										
			Mudline approximately 3 feet below water level of lake.										

LOG OF BORING B-18

PROJECT: West Lake Houston Parkway Bridge, Lake Houston
SWL No. 88-224
DATE: 7-22-88 TYPE: Wet Rotary LOCATION: Sta. 75 + 50

DEPTH, FEET	SAMPLES	BLOWS PER 6 IN.	Description	Elevation, Feet	Pocket Pen. Reading, tsf	Moisture Content, %	Dry Density pcf	Liquid Limit	Plastic Limit	Passing #200 Sieve, %	Triaxial: Ult. Princ. Stress, psi	Triaxial: Lateral Pressure, psi	Triaxial: Shear Strength, tsf
0			Surface Elevation: 50.4'										
		2	Very loose tan sand										
		2											
5		5		45									
		9											
10		9		40									
		9											
15		12	- becomes slightly compact	35									
		13											
20		12		30									
		15											
25		17		25									
		12											
30		21		20									
		13											
35		21	- becomes compact	15									
		23											
40		45	- becomes dense	10									
		50											
45		48		5									
		51											
50		38		0									
		47	Dense tan sand										
55		42		-5									
		50											
60		50/4		-10									
		50/3											
65		50/4		-15									
		50/4											
70		50/3		-20									
		50/2											
75		27	- becomes compact	-25									
		42											
80		26		-30									
		45											
85		50/4	- becomes dense	-35									
		50/3											
90		50/		-40									
		2.5											
		50/2											
			Boring Terminated at 90 feet										

LOG OF BORING B-19

PROJECT: West Lake Houston Parkway Bridge, Lake Houston
Project No. 88-224
DATE: 7-20-88 TYPE: Wet Rotray LOCATION: Sta. 77 + 50

DEPTH, FEET	SAMPLES	BLOWS PER 6 IN.	Description	Elevation, Feet	Pocket Pen. Reading, tsf	Moisture Content, %	Dry Density pcf	Liquid Limit	Plastic Limit	Passing #200 Sieve, %	Triaxial: Ult. Princ. Stress, psi	Triaxial: Lateral Pressure, psi	Triaxial: Shear Strength, tsf
0			Surface Elevation: 55.5'										
		2	Very loose tan sand										
		1											
5		5		50									
		3											
10		8	- becomes loose	45									
		8											
15		4	- becomes very loose	40									
		5											
20		12	- becomes slightly compact	35									
		18											
25		23	- becomes compact	30									
		28											
30		18		25									
		38											
35		21		20									
		42											
40		23	- with pea gravel	15									
		40											
45		47	- becomes dense	15									
		50											
50		50		5									
		50/5	Dense tan sand										
55		35		0									
		50											
60		50		-5									
		50/4											
65		48	- color change to gray	-10									
		50/5											
70		50/2	- becomes very dense	-15									
		50/2											
75		50/4	- becomes dense	-20									
		50/4											
80		50		-25									
		50/3											
85		50/3	- becomes very dense	-30									
		50/3											
90		50/3		-35									
			Boring Terminated at 90 feet										

Prepared by
Southwestern Laboratories
Geotechnical Engineering Division
Houston, Texas

NO.	DATE	REVISION	APPROV.
4			
3			
2			
1			

WEST LAKE HOUSTON PARKWAY
WEST FORK SAN JACINTO RIVER BRIDGE

BORING LOG INFORMATION

5 OF 5

Turner Collie & Braden Inc.
ENGINEERS • PLANNERS

Unit JANAK	Scale: N.T.S.	Date DECEMBER, 1991
Designed	Checked	Job No. 62-68012-020 Contract
Drawn	Approved	Sheet 15 of 50

311963

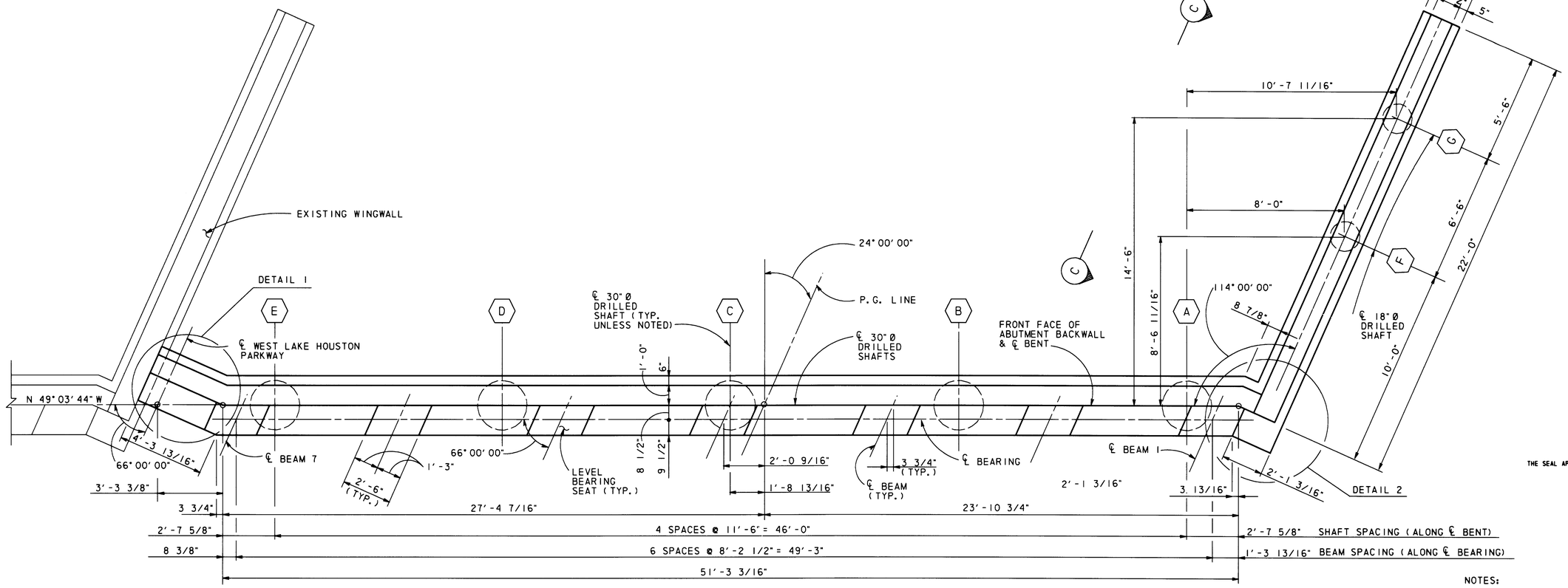

PLAN

SCALE: 3/8" = 1'-0"

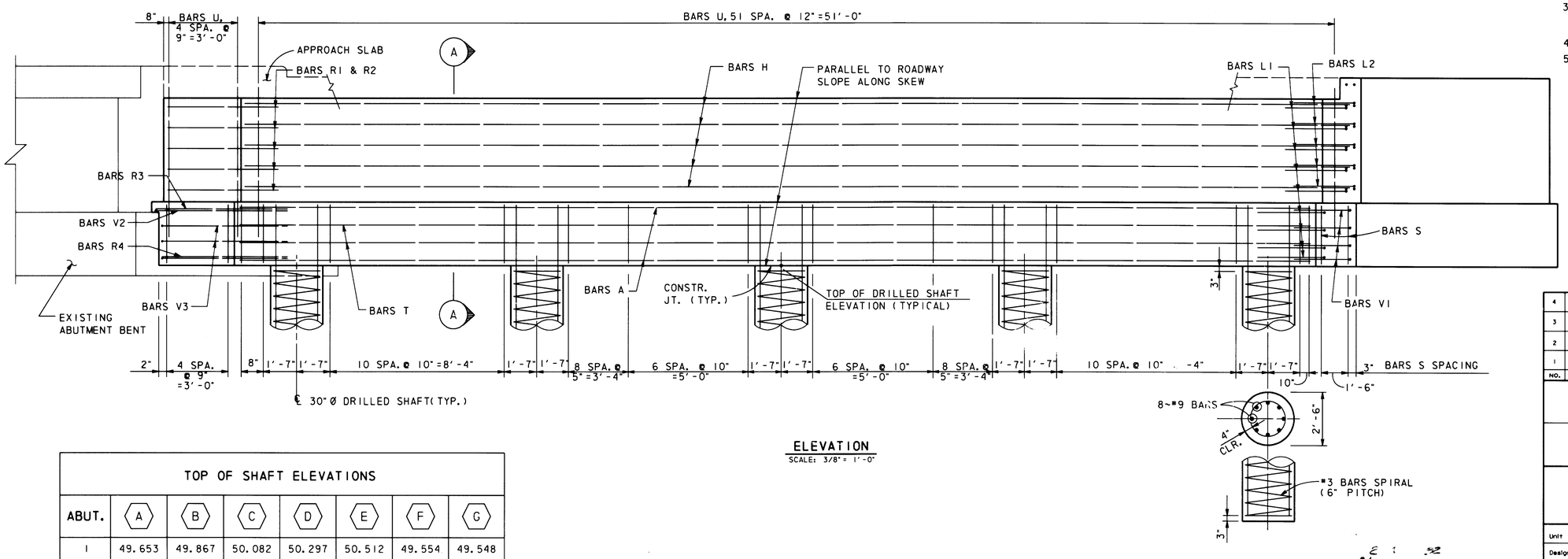

ELEVATION

SCALE: 3/8" = 1'-0"

TOP OF SHAFT ELEVATIONS							
ABUT.	(A)	(B)	(C)	(D)	(E)	(F)	(G)
1	49.653	49.867	50.082	50.297	50.512	49.554	49.548

NOTES:

1. CONCRETE SHALL BE CLASS B-1 FOR ABUTMENT AND WINGWALLS; CLASS B-2 FOR BRIDGE SEATS.
2. ALL REINFORCING STEEL SHALL BE ASTM A-615, GRADE 60.
3. AVERAGE CALCULATED DRILLED SHAFT LOAD = 113 TONS/SHAFT MAIN CAP; 10 TONS/SHAFT WINGWALLS.
4. FOR BEARING SEAT ELEVATIONS SEE SHEET 23.
5. FOR SECTION A-A & VIEW C-C SEE SHEET 20.

STATE OF TEXAS
C. B. MYLIUS
19909
REGISTERED
PROFESSIONAL ENGINEER

THE SEAL APPEARING ON THIS DOCUMENT WAS AUTHORIZED BY C. B. MYLIUS, P.E. 19909 ON _____, 19____.

CITY OF HOUSTON

APPROVALS

WATER DESIGN 5/19/92	STREET, BRIDGE & ROW 5/14/92
WATER QUALITY	STORM SEWERS DESIGN
CONSTRUCTION	WASTEWATER DESIGN 5/15/92
TRAFFIC & TRANSPORTATION	PLANNING & DEVELOPMENT DEPT.

ASST. DIRECTOR OF CAPITAL PROJECTS 6-1-92 DIRECTOR OF CAPITAL PROJECTS

NO.	DATE	REVISION	APPROV.
4			
3			
2			
1			

WEST LAKE HOUSTON PARKWAY
WEST FORK SAN JACINTO RIVER BRIDGE

ABUTMENT BENT NO. 1

1 OF 2

Turner Collie & Braden Inc.
ENGINEERS • PLANNERS

Unit JANAK	Scale: AS SHOWN	Date AUGUST, 1991	
Designed TG	Checked EDC	Job No. 62-68012-020 Contract	
Drawn DDH	Approved	Sheet 16 of 50	

WLH, LHP2ABUT, DDH, 12-10-91

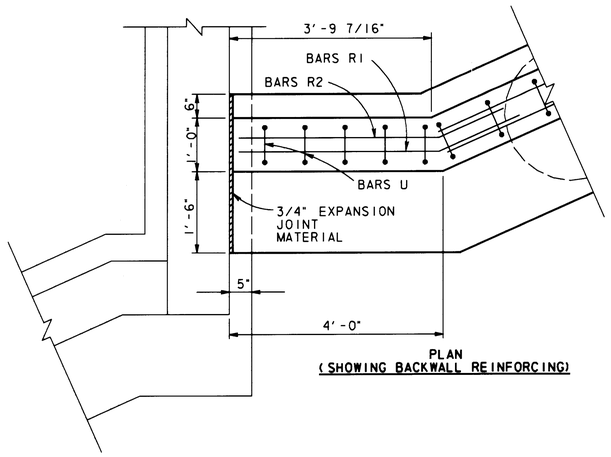

PLAN
(SHOWING BACKWALL REINFORCING)

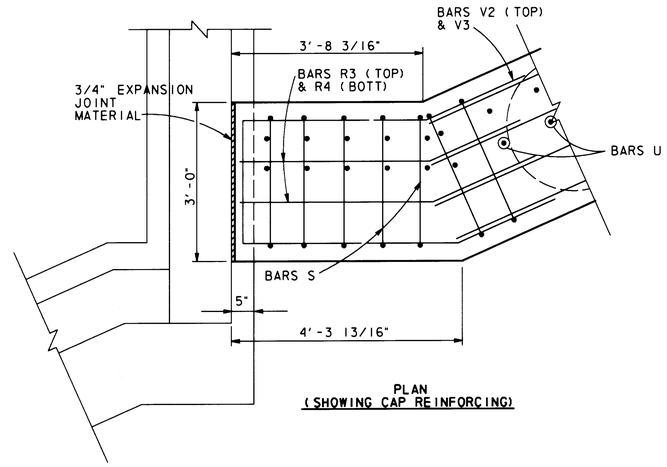

PLAN
(SHOWING CAP REINFORCING)

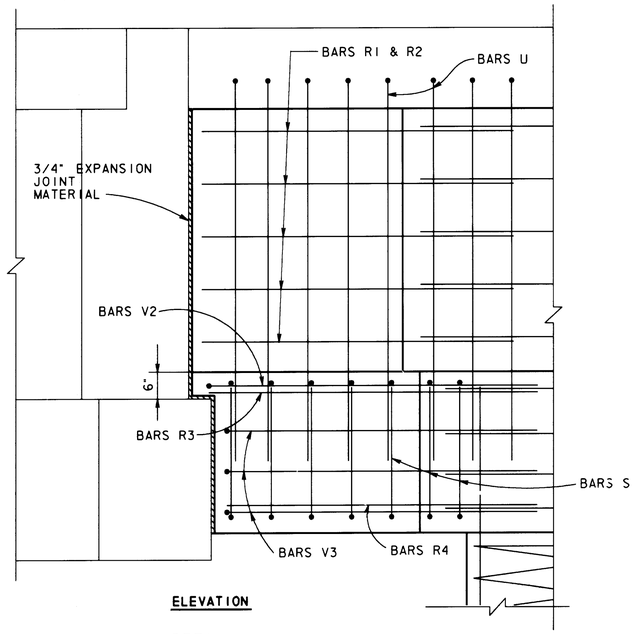

ELEVATION

DETAIL 1
SCALE: 3/4" = 1'-0"

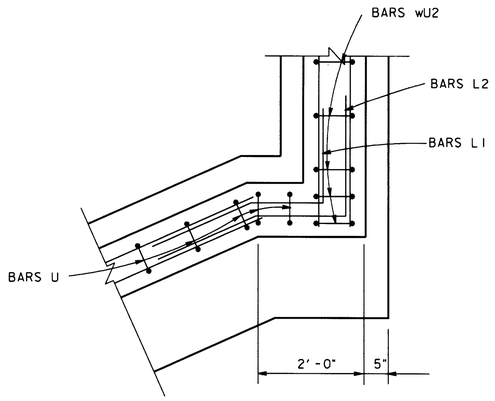

PLAN
(SHOWING BACKWALL REINFORCING)

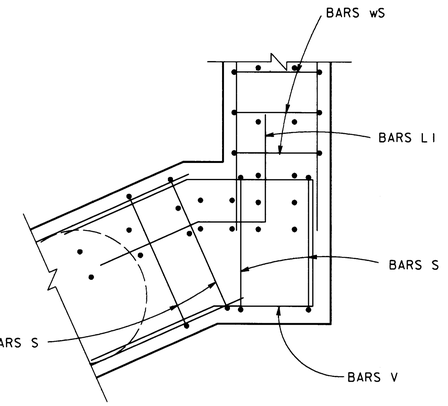

PLAN
(SHOWING CAP REINFORCING)

DETAIL 2
SCALE: 3/4" = 1'-0"

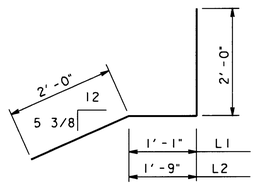

BARS L1 & L2
N. T. S.

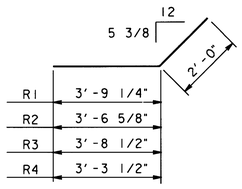

BARS R1 - R4
N. T. S.

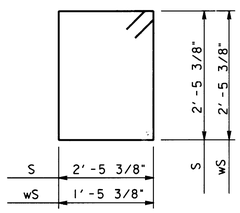

BARS S & wS
N. T. S.

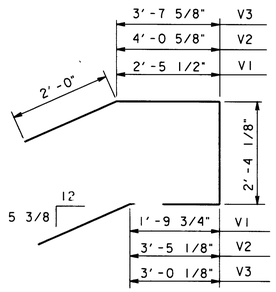

BARS V1 & V2
N. T. S.

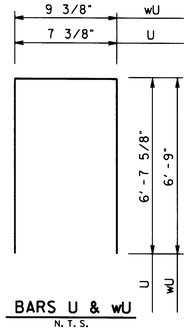

BARS U & wU
N. T. S.

THE SEAL APPEARING ON THIS DOCUMENT WAS AUTHORIZED BY C. B. MYLIUS, P.E. 19909 ON _____, 19___.

BILL OF REINFORCING STEEL

BAR	NO.	SIZE	SPACING	LENGTH	WEIGHT
A	8	#11	SHOWN	51'-3"	2,179
H	10	# 5		51'-3"	535
L1	5	# 5		5'-1"	27
L2	9	# 5		5'-9"	54
R1	5	# 5		5'-9"	30
R2	5	# 5		5'-7"	29
R3	2	# 5		5'-9"	12
R4	2	# 5		5'-4"	11
S	63	# 5		10'-8"	701
T	4	# 5		51'-3"	214
U	57	# 5		13'-11"	828
V1	4	# 5		10'-8"	45
V2	1	# 5		13'-10"	15
V3	3	# 5		13'-0"	41
wH	20	# 6		21'-8"	651
wS	24	# 5		8'-8"	217
wU	29	# 5	SHOWN	14'-4"	434
				TOTAL	6,023

ESTIMATED QUANTITIES

	ITEM	UNIT	QUANTITY
⊡	REINFORCING STEEL	LBS.	6,023
	CL. B-1 CONC. (ABUTMENT & WINGWALLS)	C.Y.	39.0
	CL. B-2 CONC. (BRIDGE SEATS)	C.Y.	0.2
	30"Ø DRILLED SHAFTS	L.F.	250
	18"Ø DRILLED SHAFTS	L.F.	40

⊡ FOR CONTRACTOR'S INFORMATION ONLY.

CITY OF HOUSTON

APPROVALS

WATER DESIGN	STREET, BRIDGE & R.O.W.
WATER QUALITY	STORM SEWERS DESIGN
CONSTRUCTION	WASTEWATER DESIGN
TRAFFIC & TRANSPORTATION	PLANNING & DEVELOPMENT DEPT.
ASST. DIRECTOR OF CAPITAL PROJECTS	DIRECTOR OF CAPITAL PROJECTS

NO.	DATE	REVISION	APPROV.
4			
3			
2			
1			

WEST LAKE HOUSTON PARKWAY
WEST FORK SAN JACINTO RIVER BRIDGE

ABUTMENT 1 DETAILS

2 OF 2

Turner Collie & Braden Inc.
ENGINEERS • PLANNERS

Unit JANAK	Scale: AS SHOWN	Date AUGUST, 1991	
Designed EDC	Checked AHB	Job No. 62-68012-020 Contract	
Drawn DDH	Approved	Sheet 17 of 50	

WLH, LHP2ABUT, DDH, 12-10-91

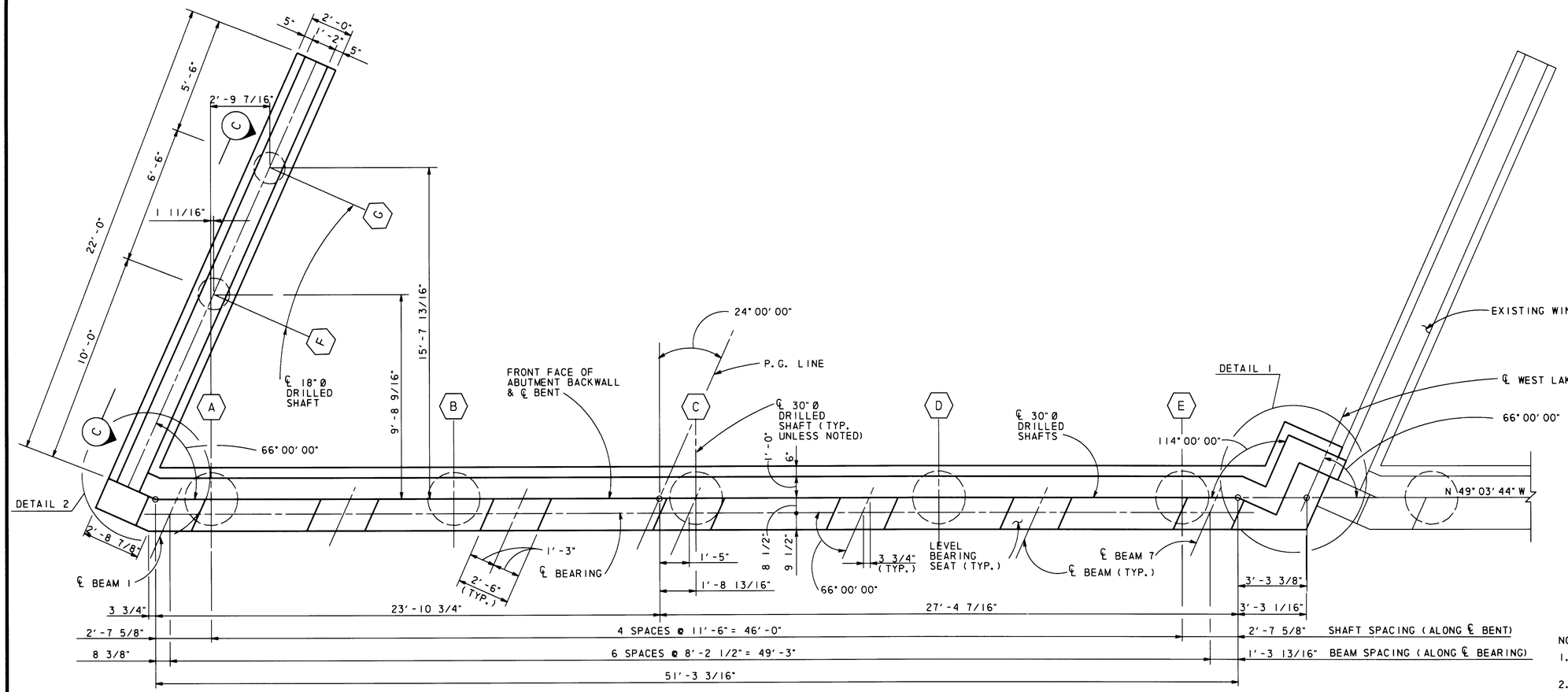

PLAN
SCALE: 3/8" = 1'-0"

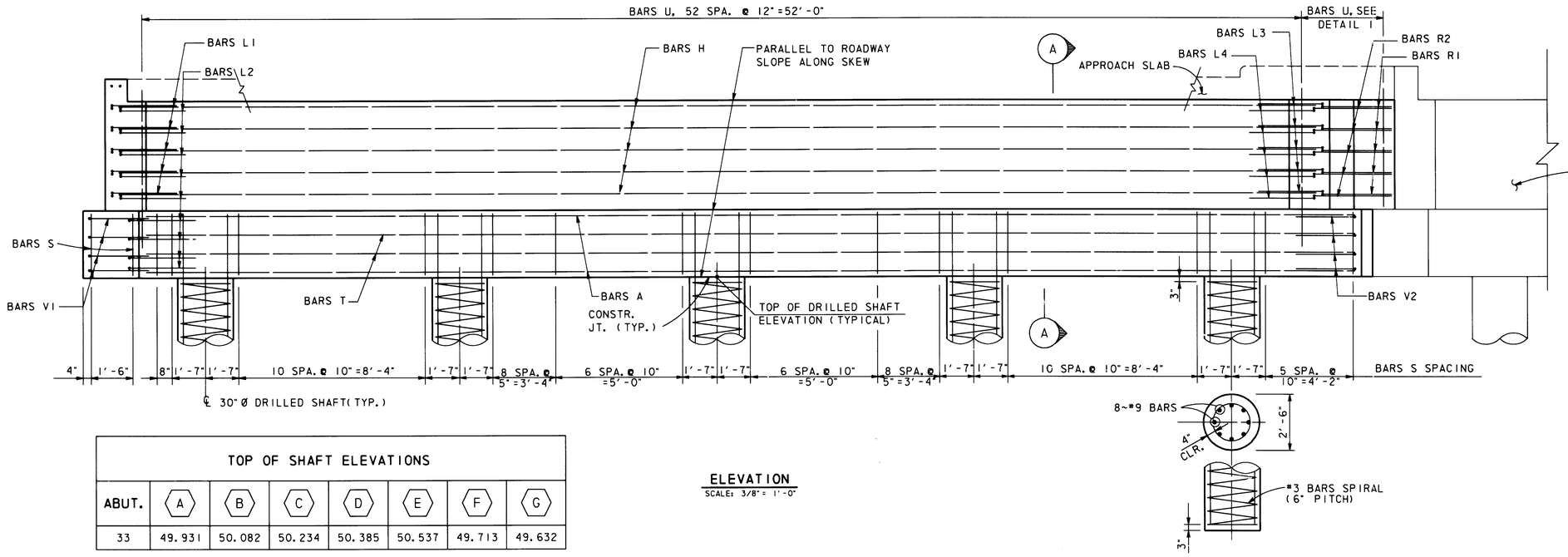

ELEVATION
SCALE: 3/8" = 1'-0"

TOP OF SHAFT ELEVATIONS							
ABUT.	A	B	C	D	E	F	G
33	49.931	50.082	50.234	50.385	50.537	49.713	49.632

NOTES:

1. CONCRETE SHALL BE CLASS B-1 FOR ABUTMENT AND WINGWALLS; CLASS B-2 FOR BRIDGE SEATS.
2. ALL REINFORCING STEEL SHALL BE ASTM A-615, GRADE 60.
3. AVERAGE CALCULATED DRILLED SHAFT LOAD = 113 TONS/SHAFT MAIN CAP; 10 TONS/SHAFT WINGWALLS.
4. FOR BEARING SEAT ELEVATIONS SEE SHEET 23.
5. FOR SECTION A-A & VIEW C-C SEE SHEET 20.

STATE OF TEXAS
C. B. MYLIUS
19909
REGISTERED PROFESSIONAL ENGINEER

THE SEAL APPEARING ON THIS DOCUMENT WAS AUTHORIZED BY C. B. MYLIUS, P.E. 19909 ON 2-4, 19 92.

CITY OF HOUSTON

APPROVALS

WATER DESIGN	5/19/92	STREET, BRIDGE & D.W.O.	5/20/92
WATER QUALITY	5/19/92	STORM SEWERS DESIGN	5/19/92
CONSTRUCTION	5/27/92	WASTEWATER DESIGN	11/19/92
TRAFFIC & TRANSPORTATION		PLANNING & DEVELOPMENT DEPT.	

ASST. DIRECTOR OF CAPITAL PROJECTS — 6-1-92 — DIRECTOR OF CAPITAL PROJECTS

NO.	DATE	REVISION	APPROV.
4			
3			
2			
1			

WEST LAKE HOUSTON PARKWAY
WEST FORK SAN JACINTO RIVER BRIDGE

ABUTMENT BENT NO. 33

1 OF 2

Turner Collie & Braden Inc.
ENGINEERS • PLANNERS

Unit JANAK	Scale: AS SHOWN	Date AUGUST, 1991	
Designed TG	Checked EDC	Job No. 62-68012-020 Contract	
Drawn DDH	Approved	Sheet 18 of 50	

WLH, LHP2AB11T DDH, 12-10-91

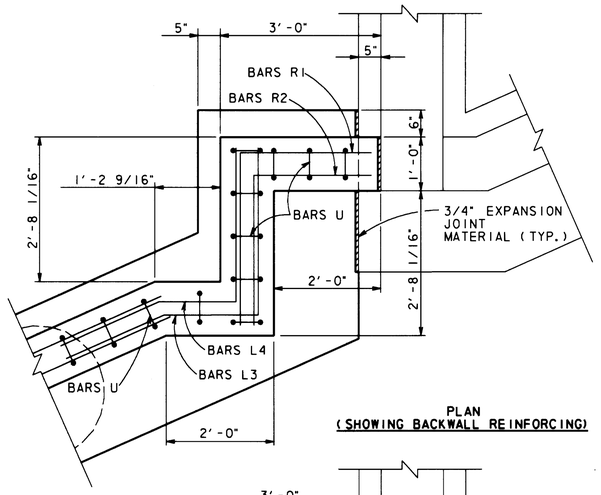

PLAN
(SHOWING BACKWALL REINFORCING)

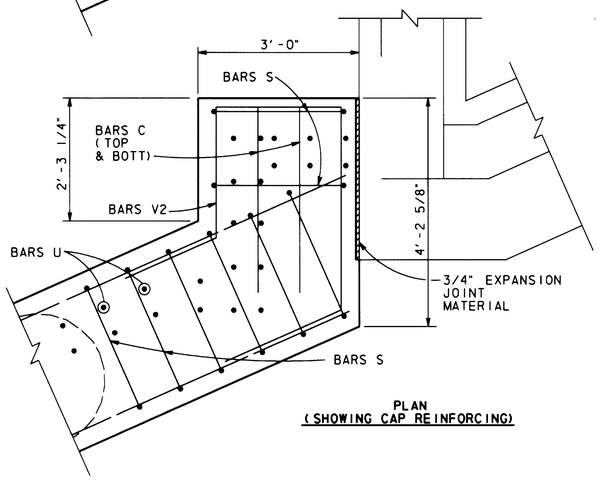

PLAN
(SHOWING CAP REINFORCING)

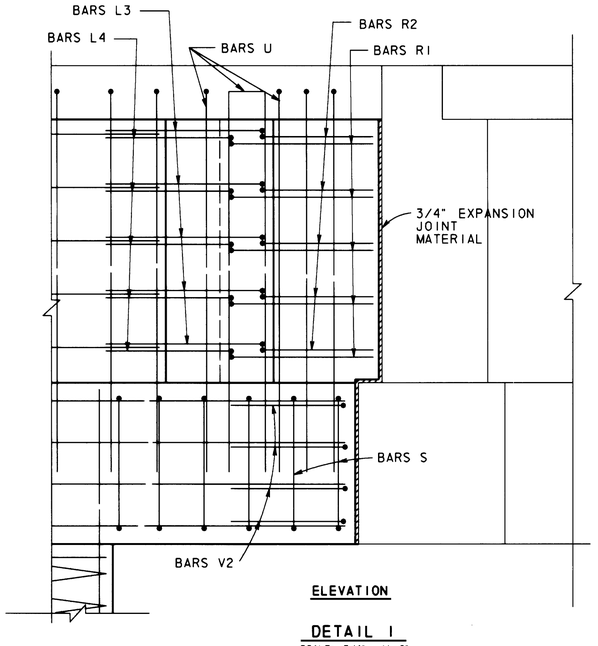

ELEVATION

DETAIL 1
SCALE: 3/4" = 1'-0"

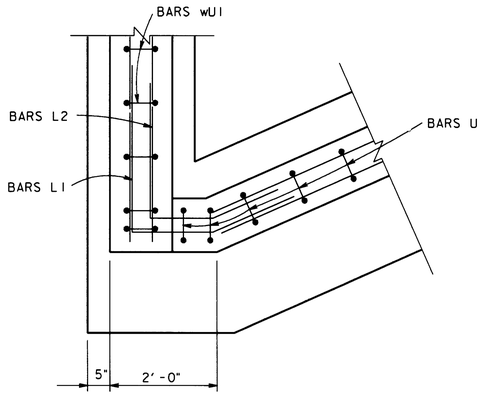

PLAN
(SHOWING BACKWALL REINFORCING)

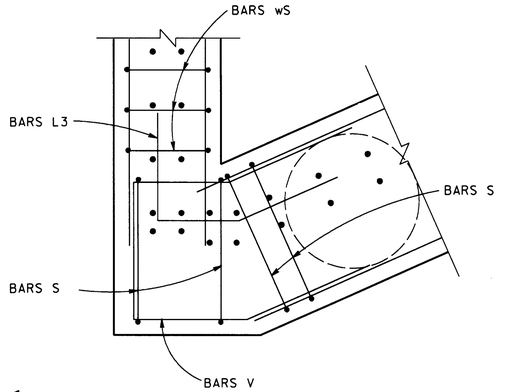

PLAN
(SHOWING CAP REINFORCING)

DETAIL 2
SCALE: 3/4" = 1'-0"

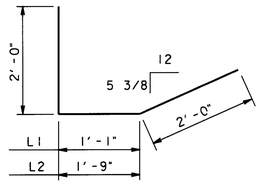

BARS L1 & L2
N. T. S.

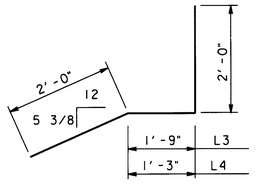

BARS L3 & L4
N. T. S.

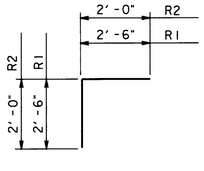

BARS R1 & R2
N. T. S.

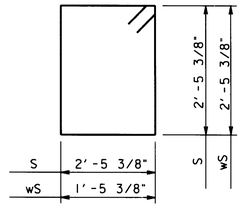

BARS S & wS
N. T. S.

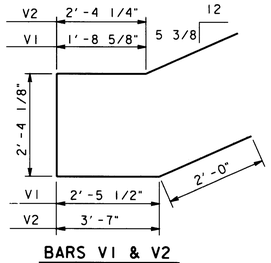

BARS V1 & V2
N. T. S.

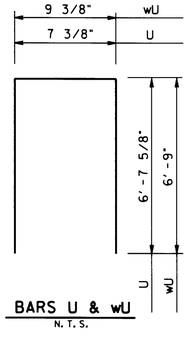

BARS U & wU
N. T. S.

BILL OF REINFORCING STEEL

BAR	NO.	SIZE	SPACING	LENGTH	WEIGHT
A	8	#11	SHOWN	54'-7"	2,320
C	4	# 5		3'-6"	15
H	10	# 5		51-3"	535
L1	5	# 5		5'-1"	27
L2	9	# 5		5'-9"	54
L3	5	# 5		5'-9"	30
L4	5	# 5		5'-3"	28
R1	5	# 5		5'-0"	26
R2	5	# 5		4'-0"	21
S	64	# 5		10'-8"	712
T	4	# 5		54'-8"	228
U	61	# 5		13'-11"	886
V1	4	# 5		10'-7"	45
V2	4	# 5		12'-4"	52
wH	20	# 6		21'-8"	651
wS	24	# 5		8'-8"	217
wU	29	# 5	SHOWN	14'-4"	434
				TOTAL	6,281

ESTIMATED QUANTITIES

	ITEM	UNIT	QUANTITY
⊡	REINFORCING STEEL	LBS.	6,281
	CL. B-1 CONC. (ABUTMENT & WINGWALLS)	C.Y.	40.2
	CL. B-2 CONC. (BRIDGE SEATS)	C.Y.	0.2
	30"Ø DRILLED SHAFTS	L.F.	250
	18"Ø DRILLED SHAFTS	L.F.	40

⊡ FOR CONTRACTOR'S INFORMATION ONLY.

CITY OF HOUSTON

APPROVALS

WATER DESIGN — STREET, BRIDGE & R.O.W.

WATER QUALITY — STORM SEWER DESIGN

CONSTRUCTION — WASTEWATER DESIGN

TRAFFIC & TRANSPORTATION — PLANNING & DEVELOPMENT DEPT.

ASST. DIRECTOR OF CAPITAL PROJECTS — DIRECTOR OF CAPITAL PROJECTS

NO.	DATE	REVISION	APPROV.
4			
3			
2			
1			

WEST LAKE HOUSTON PARKWAY
WEST FORK SAN JACINTO RIVER BRIDGE

ABUTMENT 33 DETAILS

2 OF 2

Turner Collie & Braden Inc.
ENGINEERS • PLANNERS

Unit JANAK	Scale AS SHOWN	Date AUGUST, 1991	
Designed EDC	Checked AHB	Job No. 62-68012-020 Contract	
Drawn DDH	Approved	Sheet 19 of 50	

STATE OF TEXAS
C. B. MYLIUS
19909
REGISTERED
PROFESSIONAL ENGINEER

THE SEAL APPEARING ON THIS DOCUMENT WAS AUTHORIZED BY C. B. MYLIUS, P.E. 19909 ON 2-4, 1992.

WLH, LHP2ABUT, DDH, 12-10-91

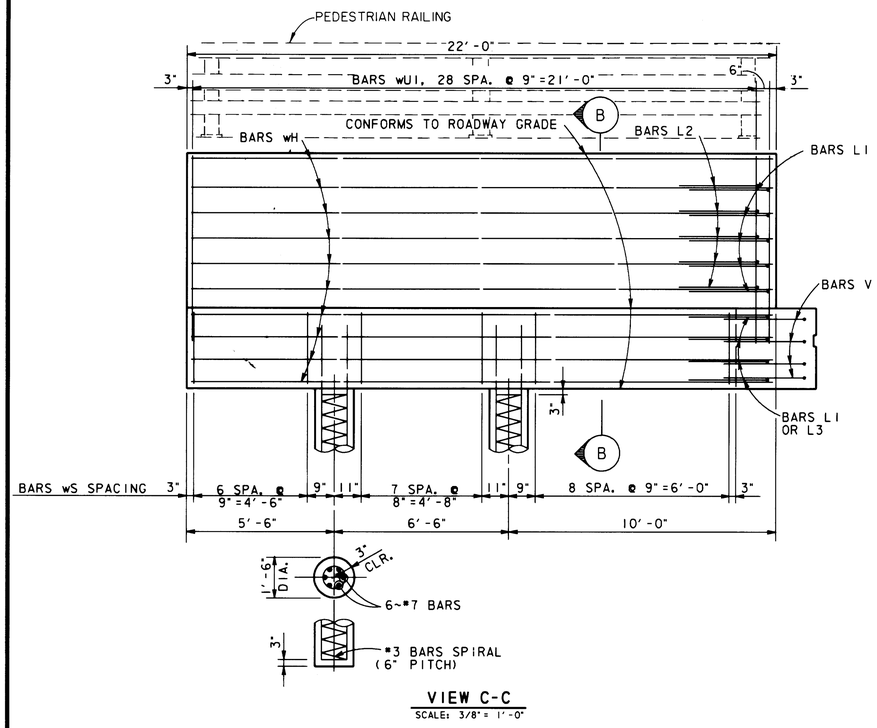

VIEW C-C
SCALE: 3/8" = 1'-0"

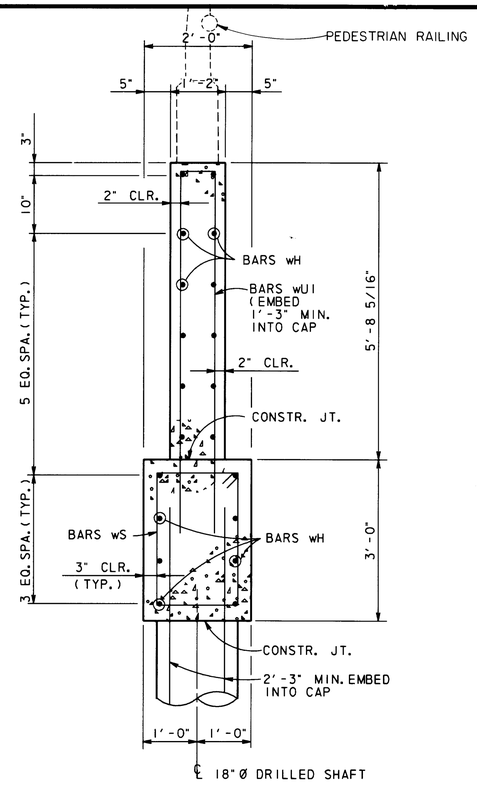

SECTION B-B
SCALE: 3/4" = 1'-0"

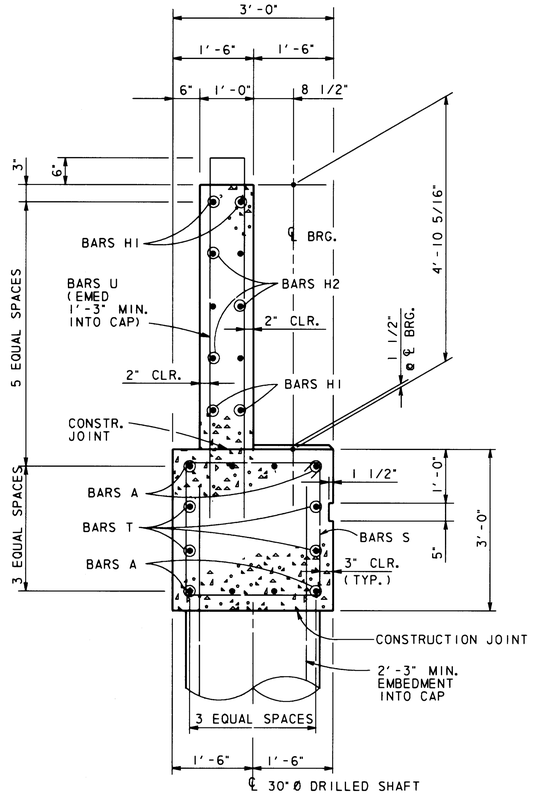

SECTION A-A
SCALE: 3/4" = 1'-0"

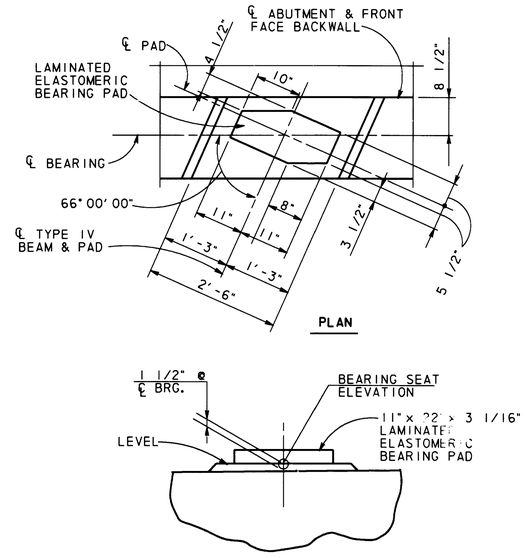

PLAN

ELEVATION

BRIDGE SEAT DETAILS
SCALE: 3/4" = 1'-0"

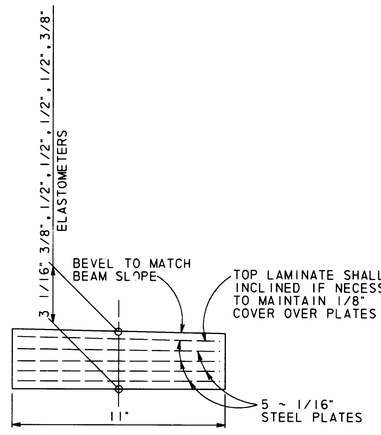

LAMINATED BEARING PADS
(60 DUROMETER)

NOTES:

1. CONCRETE SHALL BE CLASS B-1 FOR ABUTMENT AND WINGWALLS; CLASS B-2 FOR BRIDGE SEATS.
2. ALL REINFORCING STEEL SHALL BE ASTM A-615, GRADE 60.
3. AVERAGE CALCULATED DRILLED SHAFT LOAD = 113 TONS/SHAFT MAIN CAP; 10 TONS/SHAFT WINGWALLS.
4. FOR BEARING SEAT ELEVATIONS SEE SHEET 23.

CITY OF HOUSTON

APPROVALS

WATER DESIGN 5/19/92	STREET, BRIDGE & R.O.W. 5/18/92
WATER QUALITY	STORM SEWERS DESIGN 5/14/92
CONSTRUCTION	WASTEWATER DESIGN 5/13/92
TRAFFIC & TRANSPORTATION 5/27/92	PLANNING & DEVELOPMENT DEPT.
ASST. DIRECTOR OF CAPITAL PROJECTS	DIRECTOR OF CAPITAL PROJECTS

NO.	DATE	REVISION	APPROV.
4			
3			
2			
1			

WEST LAKE HOUSTON PARKWAY
WEST FORK SAN JACINTO RIVER BRIDGE

MISC. ABUTMENT DETAILS

Turner Collie & Braden Inc.
ENGINEERS • PLANNERS

STATE OF TEXAS — C. B. MYLIUS — 19909 — REGISTERED PROFESSIONAL ENGINEER

THE SEAL APPEARING ON THIS DOCUMENT WAS AUTHORIZED BY C. B. MYLIUS, P.E. 19909 ON 5-9-92

Unit JANAK	Scale: AS SHOWN	Date AUGUST, 1991	
Designed TG	Checked EDC	Job No. 62-68012-020	Contract
Drawn DDH	Approved	Sheet 20	of 50

WLH, LHP2ABUT, DDH, 12-10-91

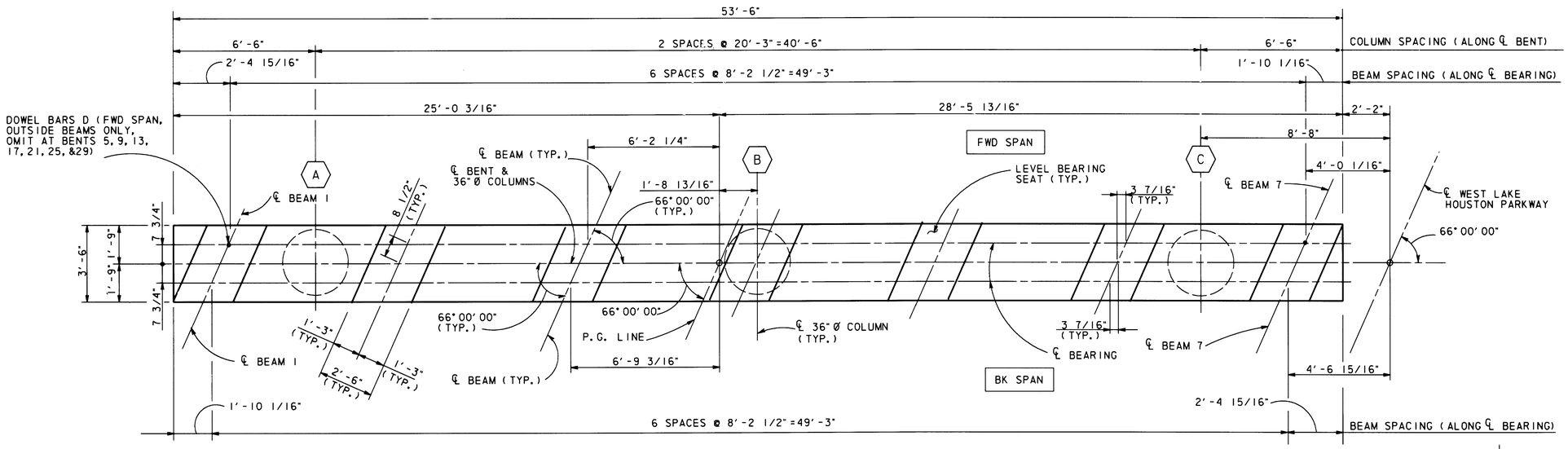

PLAN

SCALE: 3/8" = 1'-0"

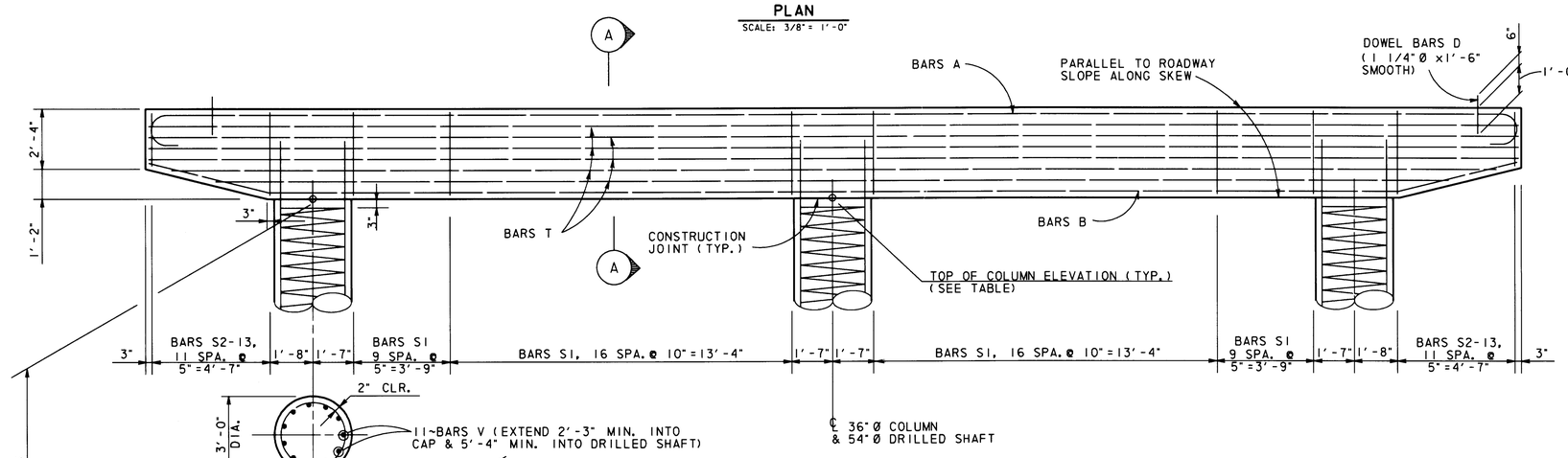

ELEVATION

SCALE: 3/8" = 1'-0"

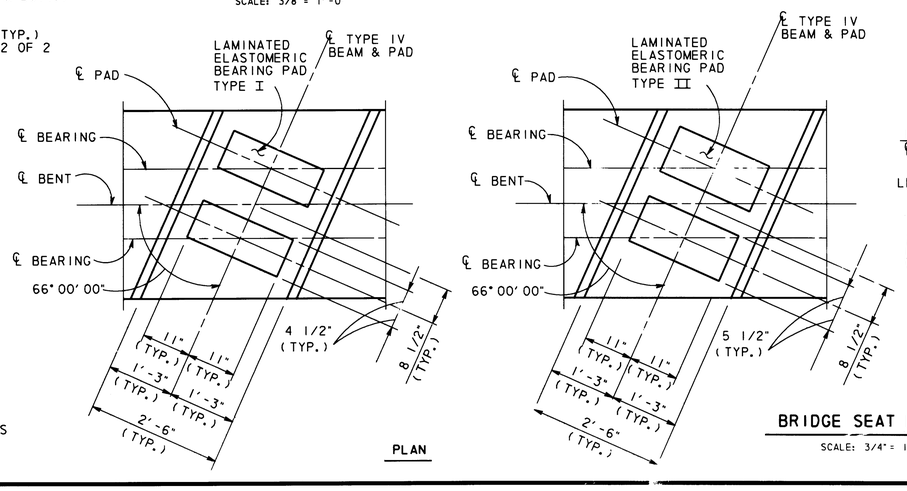

BRIDGE SEAT DETAILS (SEE NOTE 6 ON SHEET 2 OF 2)

SCALE: 3/4" = 1'-0"

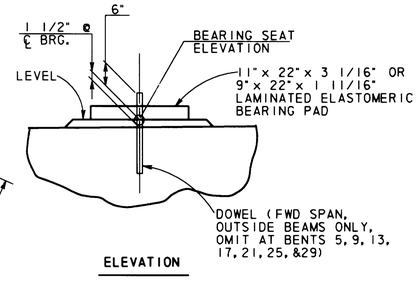

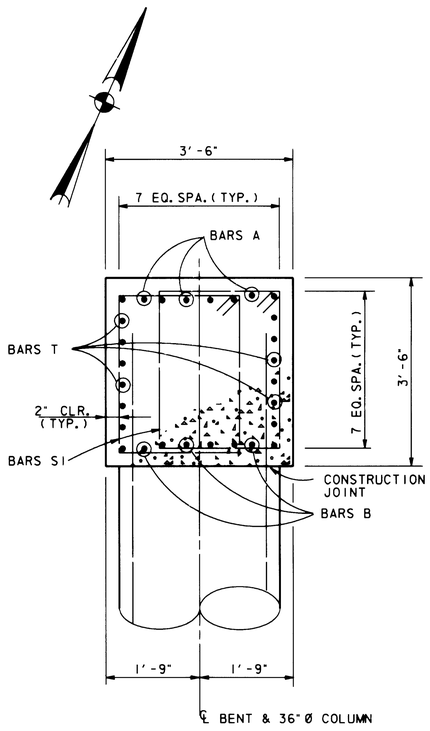

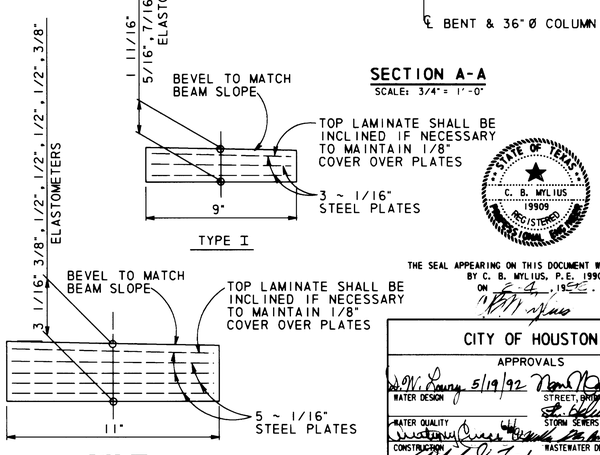

SECTION A-A

SCALE: 3/4" = 1'-0"

LAMINATED BEARING PADS

(60 DUROMETER)
(SEE SHEET 22 FOR LOCATION)

STATE OF TEXAS — C. B. MYLIUS — 19909 — REGISTERED — PROFESSIONAL ENGINEER

THE SEAL APPEARING ON THIS DOCUMENT WAS AUTHORIZED BY C. B. MYLIUS, P.E. 19909 ON 5-4, 1992.

CITY OF HOUSTON

APPROVALS

WATER DESIGN	STREET, BRIDGE & R.O.W.
WATER QUALITY	STORM SEWERS DESIGN
CONSTRUCTION	WASTEWATER DESIGN
TRAFFIC & TRANSPORTATION	PLANNING & DEVELOPMENT DEPT.
ASST. DIRECTOR OF CAPITAL PROJECTS	DIRECTOR OF CAPITAL PROJECTS

NO.	DATE	REVISION	APPROV.
4			
3			
2			
1			

WEST LAKE HOUSTON PARKWAY
WEST FORK SAN JACINTO RIVER BRIDGE

INTERIOR BENT DETAILS

1 OF 2

Turner Collie & Braden Inc.
ENGINEERS • PLANNERS

Unit JANAK	Scale: AS SHOWN	Date AUGUST, 1991	
Designed EDC/TG	Checked EDC	Job No. 62-68012-020 Contract	
Drawn DDH	Approved	Sheet 21 of 50	

WLH, LHP2 INBN, DDH, 9-10-91

BENT	COLUMN	TOP OF COL. ELEV.	TOP OF SHAFT ELEV.	COLUMN HEIGHT (FT.)
2	A	49.437	42.000	7.437
	B	49.815	42.000	7.815
	C	50.193	42.000	8.193
3	A	49.555	42.000	7.555
	B	49.933	42.000	7.933
	C	50.311	42.000	8.311
4	A	49.672	42.000	7.672
	B	50.051	42.000	8.051
	C	50.429	42.000	8.429
5	A	49.676	42.000	7.676
	B	50.054	42.000	8.054
	C	50.432	42.000	8.432
6	A	49.908	42.000	7.908
	B	50.287	42.000	8.287
	C	50.665	42.000	8.665
7	A	50.026	42.000	8.026
	B	50.405	42.000	8.405
	C	50.783	42.000	8.783
8	A	50.144	42.000	8.144
	B	50.523	42.000	8.523
	C	50.901	42.000	8.901
9	A	50.148	42.000	8.148
	B	50.526	42.000	8.526
	C	50.904	42.000	8.904
10	A	50.380	42.000	8.380
	B	50.759	42.000	8.759
	C	51.137	42.000	9.137
11	A	50.498	42.000	8.498
	B	50.876	42.000	8.876
	C	51.255	42.000	9.255
12	A	50.616	42.000	8.616
	B	50.994	42.000	8.994
	C	51.373	42.000	9.373
13	A	50.620	42.000	8.620
	B	50.998	42.000	8.998
	C	51.376	42.000	9.376
14	A	50.852	42.000	8.852
	B	51.230	42.000	9.230
	C	51.609	42.000	9.609
15	A	50.970	42.000	8.970
	B	51.348	42.000	9.348
	C	51.727	42.000	9.727
16	A	51.088	42.000	9.088
	B	51.466	42.000	9.466
	C	51.845	42.000	9.845
17	A	51.091	42.000	9.091
	B	51.470	42.000	9.470
	C	51.848	42.000	9.848

BENT	COLUMN	TOP OF COL. ELEV.	TOP OF SHAFT ELEV.	COLUMN HEIGHT (FT.)
18	A	51.324	42.000	9.324
	B	51.702	42.000	9.702
	C	52.081	42.000	10.081
19	A	51.442	42.000	9.442
	B	51.820	42.000	9.820
	C	52.198	42.000	10.198
20	A	51.560	42.000	9.560
	B	51.938	42.000	9.938
	C	52.316	42.000	10.316
21	A	51.563	42.000	9.563
	B	51.942	42.000	9.942
	C	52.320	42.000	10.320
22	A	51.829	42.000	9.829
	B	52.230	42.000	10.230
	C	52.637	42.000	10.637
23	A	52.807	42.000	10.807
	B	53.280	42.000	11.280
	C	53.753	42.000	11.753
24	A	54.296	42.000	12.296
	B	54.769	42.000	12.769
	C	55.242	42.000	13.242
25	A	55.671	42.000	13.671
	B	56.144	42.000	14.144
	C	56.617	42.000	14.617
26	A	56.983	42.000	14.983
	B	57.406	42.000	15.406
	C	57.824	42.000	15.824
27	A	57.329	42.000	15.329
	B	57.691	42.000	15.691
	C	58.048	42.000	16.048
28	A	56.805	42.000	14.805
	B	57.106	42.000	15.106
	C	57.403	42.000	15.403
29	A	55.368	42.000	13.368
	B	55.635	42.000	13.635
	C	55.902	42.000	13.902
30	A	54.007	42.000	12.007
	B	54.274	42.000	12.274
	C	54.541	42.000	12.541
31	A	52.532	42.000	10.532
	B	52.799	42.000	10.799
	C	53.066	42.000	11.066
32	A	51.057	42.000	9.057
	B	51.324	42.000	9.324
	C	51.591	42.000	9.591

BILL OF REINFORCING STEEL-COLUMN

BENT NO.	BAR	NO.	SIZE	SPACING	LENGTH	WEIGHT
2, 3	V1	33	#11	SHOWN	15'-11"	2,791
4, 5, 6	V2	33	#11	↑	16'-3"	2,850
7, 8, 9	V3	33	#11	↑	16'-6"	2,893
10, 11	V4	33	#11	↑	16'-11"	2,966
12, 13	V5	33	#11	↑	17'-0"	2,981
14, 15, 32	V6	33	#11	↑	17'-4"	3,039
16, 17, 18	V7	33	#11	↑	17'-8"	3,098
19, 20, 21	V8	33	#11	↑	17'-11"	3,142
22	V9	33	#11	↑	18'-3"	3,200
23	V10	33	#11	↑	19'-5"	3,405
24	V11	33	#11	↑	20'-11"	3,668
25	V12	33	#11	↑	22'-3"	3,901
26	V13	33	#11	↑	23'-5"	4,106
27	V14	33	#11	↑	23'-8"	4,150
28	V15	33	#11	↑	23'-0"	4,033
29	V16	33	#11	↑	21'-6"	3,770
30	V17	33	#11	↑	20'-2"	3,536
31	V18	33	#11	↑	18'-8"	3,273
2, 3, 4, 5	Z1	3	#4	↑	148'-8"	298
6, 7, 8, 9	Z2	3	#4	↑	157'-0"	315
10, 11, 12, 13, 14	Z3	3	#4	↑	165'-3"	332
15, 16, 17, 18, 32	Z4	3	#4	↑	173'-6"	348
19, 20, 21, 22	Z5	3	#4	↑	181'-9"	365
23	Z6	3	#4	↑	206'-6"	414
24	Z7	3	#4	↑	231'-4"	464
25	Z8	3	#4	↑	247'-10"	497
26, 27	Z9	3	#4	↑	272'-8"	547
28	Z10	3	#4	↑	264'-4"	530
29	Z11	3	#4	↑	239'-7"	481
30	Z12	3	#4	↑	223'-1"	447
31	Z13	3	#4	SHOWN	198'-3"	398

BILL OF REINFORCING STEEL-CAP

BAR	NO.	SIZE	SPACING	LENGTH	WEIGHT
A	8	#11	SHOWN	56'-3"	2,391
B	8	#11	↑	53'-2"	2,260
S1	108	#5	↑	11'-7"	1,305
S2-13	24	#5	↓	12'-2"	305
				(AVG.)	
T	12	#4	SHOWN	53'-2"	426
				⊙TOTAL	6,687
△D	48	1 1/4" (DIA.)	SHOWN	1'-6"	300

△ ESTIMATED QUANTITIES

	ITEM	UNIT	QUANTITY
⊡	REINFORCING STEEL	LBS.	332,192
	CL. B-1 CONC. (CAPS)	C.Y.	730.2
	CL. B-1 CONC. (36"Ø COL.)	C.Y.	250.4
	CL. B-2 CONC. (BRIDGE SEATS)	C.Y.	9.6
	54"Ø DRILLED SHAFTS	L.F.	6,510

⊙ CALCULATED FOR ONE INTERIOR BENT ONLY

△ CALCULATED FOR INTERIOR BENTS 2 THROUGH 32.

⊡ FOR CONTRACTOR'S INFORMATION ONLY.

NOTES:
1. CONCRETE SHALL BE CLASS B-1 FOR BENT CAPS AND COLUMNS; CLASS B-2 FOR BRIDGE SEATS.
2. ALL REINFORCING STEEL SHALL BE ASTM A-615, GRADE 60.
3. AVERAGE CALCULATED DRILLED SHAFT LOAD = 364 TONS/SHAFT.
4. FOR BEARING SEAT ELEVATIONS SEE SHEET 23.
5. CONSTRUCTION JOINT BETWEEN DRILLED SHAFTS AND COLUMNS WILL BE AS SHOWN. DOWELS MAY BE USED IN LIEU OF COLUMN BARS EXTENDING INTO DRILLED SHAFTS PROVIDED PROPER LAPS ARE INCLUDED. CASINGS ABOVE WATER LINE MUST BE REMOVED TO A LEVEL 2 FT. BELOW NORMAL POOL ELEVATION 43.50.
6. BRIDGE SEATS MAY BE PLACED MONOLITHICALLY WITH THE CAP. IF CONSTRUCTED IN THIS MANNER, ALL THE CONCRETE SHALL BE CL. B-1.
7. FOR FINISHING EXPOSED SURFACES, A LATEX BASED SURFACE FINISH THAT MEETS THE REQUIREMENTS OF TEXAS DEPARTMENT OF TRANSPORTATION ITEM 427 WILL BE PERMITTED.

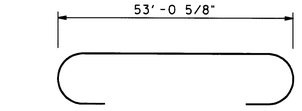

BARS A
NTS

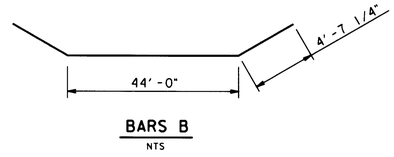

BARS B
NTS

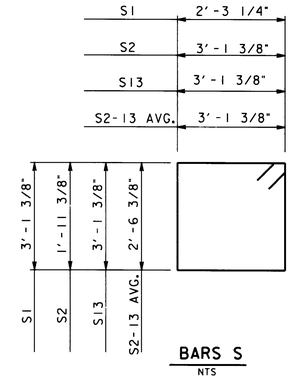

BARS S
NTS

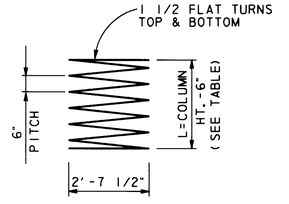

BARS Z
NTS

THE SEAL APPEARING ON THIS DOCUMENT WAS AUTHORIZED BY C. B. MYLIUS, P.E. 19909 ON 2-4, 1992.

CITY OF HOUSTON

APPROVALS

WATER DESIGN — STREET, BRIDGE & R.O.W.

WATER QUALITY — STORM SEWERS DESIGN

CONSTRUCTION — WASTEWATER DESIGN

TRAFFIC & TRANSPORTATION — PLANNING & DEVELOPMENT DEPT.

ASST. DIRECTOR OF CAPITAL PROJECTS — DIRECTOR OF CAPITAL PROJECTS

NO.	DATE	REVISION	APPROV.
4			
3			
2			
1			

WEST LAKE HOUSTON PARKWAY
WEST FORK SAN JACINTO RIVER BRIDGE

INTERIOR BENT DETAILS

2 OF 2

Turner Collie & Braden Inc.
ENGINEERS + PLANNERS

Unit JANAK	Scale:	Date AUGUST, 1991	
Designed EDC/TG	Checked EDC	Job No. 62-68012-020 Contract	
Drawn DDH	Approved	Sheet 22 of 50	

WLH, LHP2INT, DDH, 12-11-91

BEARING SEAT ELEVATIONS								BEARING PAD TYPE
BENT	BEAM 1	BEAM 2	BEAM 3	BEAM 4	BEAM 5	BEAM 6	BEAM 7	
1 (FWD)	52.7433	52.8966	53.0499	53.2033	53.3566	53.5100	53.6633	II
2 (BK) (FWD)	52.9746 52.9760	53.1279 53.1293	53.2812 53.2827	53.4346 53.4360	53.5879 53.5894	53.7413 53.7427	53.8946 53.8960	I
3 (BK) (FWD)	53.0927 53.0942	53.2461 53.2475	53.3994 53.4009	53.5528 53.5542	53.7061 53.7076	53.8595 53.8609	54.0128 54.0142	I
4 (BK) (FWD)	53.2109 53.2124	53.3643 53.3657	53.5176 53.5191	53.6710 53.6724	53.8243 53.8257	53.9777 53.9791	54.1310 54.1324	I
5 (BK) (FWD)	53.2145 53.2160	53.3679 53.3693	53.5212 53.5226	53.6746 53.6760	53.8279 53.8293	53.9813 53.9827	54.1346 54.1360	II
6 (BK) (FWD)	53.4473 53.4487	53.6007 53.6021	53.7540 53.7554	53.9074 53.9088	54.0607 54.0621	54.2140 54.2155	54.3674 54.3688	I
7 (BK) (FWD)	53.5655 53.5669	53.7189 53.7203	53.8722 53.8736	54.0255 54.0270	54.1789 54.1803	54.3322 54.3337	54.4856 54.4870	I
8 (BK) (FWD)	53.6837 53.6851	53.8370 53.8385	53.9904 53.9918	54.1437 54.1452	54.2971 54.2985	54.4504 54.4519	54.6038 54.6052	I
9 (BK) (FWD)	53.6873 53.6887	53.8406 53.8421	53.9940 53.9954	54.1473 54.1488	54.3007 54.3021	54.4540 54.4554	54.6074 54.6088	II
10 (BK) (FWD)	53.9201 53.9215	54.0734 54.0748	54.2268 54.2282	54.3801 54.3815	54.5335 54.5349	54.6868 54.6882	54.8402 54.8416	I
11 (BK) (FWD)	54.0383 54.0397	54.1916 54.1930	54.3450 54.3464	54.4983 54.4997	54.6516 54.6531	54.8050 54.8064	54.9583 54.9598	I
12 (BK) (FWD)	54.1565 54.1579	54.3098 54.3112	54.4632 54.4646	54.6165 54.6179	54.7698 54.7713	54.9232 54.9246	55.0765 55.0779	I
13 (BK) (FWD)	54.1600 54.1615	54.3134 54.3148	54.4667 54.4682	54.6201 54.6215	54.7734 54.7749	54.9268 54.9282	55.0801 55.0815	II
14 (BK) (FWD)	54.3928 54.3943	54.5462 54.5476	54.6995 54.7010	54.8529 54.8543	55.0062 55.0076	55.1596 55.1610	55.3129 55.3143	I
15 (BK) (FWD)	54.5110 54.5125	54.6644 54.6658	54.8177 54.8191	54.9711 54.9725	55.1244 55.1258	55.2778 55.2792	55.4311 55.4325	I
16 (BK) (FWD)	54.6292 54.6306	54.7826 54.7840	54.9359 54.9373	55.0893 55.0907	55.2426 55.2440	55.3960 55.3974	55.5493 55.5507	I
17 (BK) (FWD)	54.6328 54.6342	54.7862 54.7876	54.9395 54.9409	55.0928 55.0943	55.2462 55.2476	55.3995 55.4010	55.5529 55.5543	II
18 (BK) (FWD)	54.8656 54.8670	55.0190 55.0204	55.1723 55.1737	55.3256 55.3271	55.4790 55.4804	55.6323 55.6338	55.7857 55.7871	I
19 (BK) (FWD)	54.9838 54.9852	55.1371 55.1386	55.2905 55.2919	55.4438 55.4453	55.5972 55.5986	55.7505 55.7519	55.9039 55.9053	I
20 (BK) (FWD)	55.1020 55.1034	55.2553 55.2568	55.4087 55.4101	55.5620 55.5634	55.7154 55.7168	55.8687 55.8701	56.0221 56.0235	I
21 (BK) (FWD)	55.1056 55.1070	55.2589 55.2603	55.4123 55.4137	55.5656 55.5670	55.7190 55.7204	55.8723 55.8737	56.0256 56.0271	II
22 (BK) (FWD)	55.3657 55.3703	55.5269 55.5319	55.6890 55.6945	55.8522 55.8581	56.0163 56.0226	56.1814 56.1882	56.3475 56.3546	I
23 (BK) (FWD)	56.3208 56.3386	56.5126 56.5303	56.7043 56.7220	56.8960 56.9137	57.0877 57.1055	57.2794 57.2972	57.4712 57.4888	I
24 (BK) (FWD)	57.8100 57.8277	58.0017 58.0195	58.1934 58.2112	58.3852 58.4029	58.5769 58.5946	58.7686 58.7863	58.9603 58.9779	I
25 (BK) (FWD)	59.1847 59.2024	59.3764 59.3941	59.5681 59.5859	59.7598 59.7776	59.9516 59.9693	60.1433 60.1610	60.3350 60.3526	II
26 (BK) (FWD)	60.5118 60.5213	60.6840 60.6933	60.8556 60.8646	61.0265 61.0352	61.1967 61.2051	61.3662 61.3743	61.5350 61.5427	I
27 (BK) (FWD)	60.8763 60.8754	61.0239 61.0227	61.1709 61.1694	61.3172 61.3153	61.4627 61.4606	61.6076 61.6052	61.7518 61.7491	I
28 (BK) (FWD)	60.3709 60.3595	60.4939 60.4823	60.6163 60.6043	60.7379 60.7257	60.8589 60.8463	60.9791 60.9663	61.0987 61.0856	I
29 (BK) (FWD)	58.9458 58.9280	59.0540 59.0363	59.1623 59.1446	59.2706 59.2528	59.3788 59.3611	59.4871 59.4693	59.5953 59.5777	II
30 (BK) (FWD)	57.5857 57.5680	57.6940 57.6762	57.8022 57.7845	57.9105 57.8927	58.0188 58.0010	58.1270 58.1093	58.2353 58.2177	I
31 (BK) (FWD)	56.1110 56.0933	56.2193 56.2016	56.3276 56.3098	56.4358 56.4181	56.5441 56.5263	56.6523 56.6346	56.7606 56.7430	I

BEARING SEAT ELEVATIONS								BEARING PAD TYPE
BENT	BEAM 1	BEAM 2	BEAM 3	BEAM 4	BEAM 5	BEAM 6	BEAM 7	
32 (BK) (FWD)	54.6364 54.6186	54.7446 54.7269	54.8529 54.8352	54.9612 54.9434	55.0694 55.0517	55.1777 55.1599	55.2859 55.2683	I
33 (BK)	53.0479	53.1562	53.2645	53.3728	53.4810	53.5893	53.6975	II

BEARING TYPE	QUANTITY
I	336
II	112

(FOR CONTRACTOR'S INFORMATION ONLY)

STATE OF TEXAS
C. B. WYLIUS
19909
REGISTERED PROFESSIONAL ENGINEER

THE SEAL APPEARING ON THIS DOCUMENT WAS AUTHORIZED BY C. B. WYLIUS, P.E. 19909 ON 2-4, 1992.

CITY OF HOUSTON

APPROVALS

WATER DESIGN 5/19/92
STREET, BRIDGE & R.O.W.
WATER QUALITY
STORM SEWERS DESIGN
CONSTRUCTION 5/27/92
WASTEWATER DESIGN
TRAFFIC & TRANSPORTATION 5/27/92
PLANNING & DEVELOPMENT DEPT.

ASST. DIRECTOR OF CAPITAL PROJECTS
DIRECTOR OF CAPITAL PROJECTS

NO.	DATE	REVISION	APPROV.
4			
3			
2			
1			

WEST LAKE HOUSTON PARKWAY
WEST FORK SAN JACINTO RIVER BRIDGE

BEARING SEAT ELEVATIONS

Turner Collie & Braden Inc.
ENGINEERS • PLANNERS

Unit JANAK	Scale N. T. S.	Date AUGUST, 1991	
Designed EDC	Checked AHB	Job No. 62-68012-020 Contract	
Drawn ODH	Approved	Sheet 23 of 50	

WLH, LHP2BRG, DDH, 12-11-91

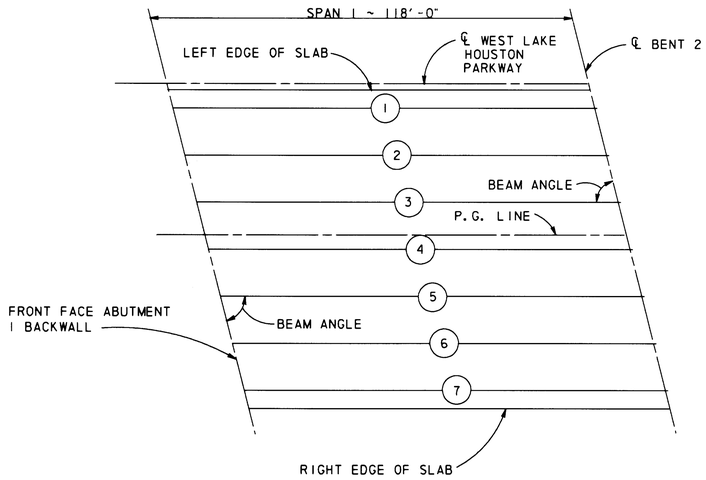

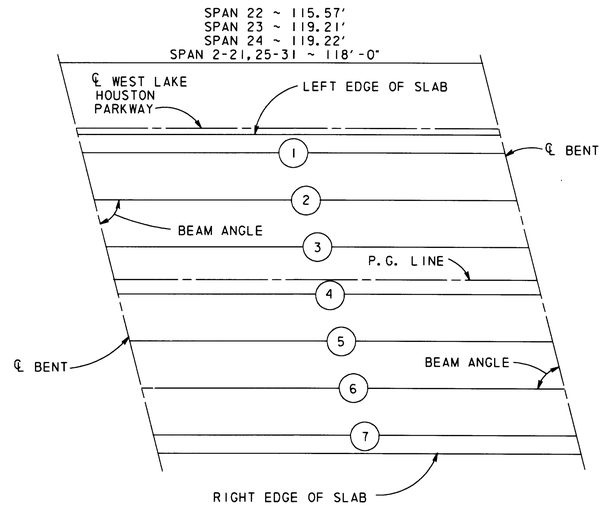

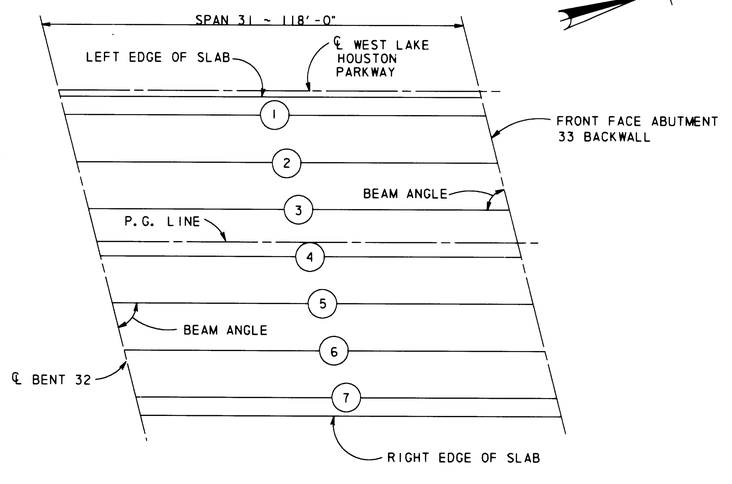

BENT REPORT

BENT NO. 1 (N 82 56 15.68 E)

DISTANCE BETWEEN STATION LINE AND BEAM 1, 53.5459 L

		BEAM SPAC. (C.L. BENT)	BEAM ANGLE D M S	DISTANCE FROM C.L. BENT TO C.L. BEARING ALONG BEAM	ALONG C.L. BT	PERP. TO C.L. BT
SPAN 1	BEAM 1	0.0000	66 0 0.00	0.7754	0.3154	0.7083
	BEAM 2	8.2098	66 0 0.00	0.7754	0.3154	0.7083
	BEAM 3	8.2098	66 0 0.00	0.7754	0.3154	0.7083
	BEAM 4	8.2098	66 0 0.00	0.7754	0.3154	0.7083
	BEAM 5	8.2098	66 0 0.00	0.7754	0.3154	0.7083
	BEAM 6	8.2098	66 0 0.00	0.7754	0.3154	0.7083
	BEAM 7	8.2098	66 0 0.00	0.7754	0.3154	0.7083
	TOTAL	49.2586				

BENT REPORT

BENT NO. 2 - 32 (N 82 56 15.68 E)

DISTANCE BETWEEN STATION LINE AND BEAM 1, 53.5459 L

		BEAM SPAC. (C.L. BENT)	BEAM ANGLE D M S	DISTANCE FROM C.L. BENT TO C.L. BEARING ALONG BEAM	ALONG C.L. BT	PERP. TO C.L. BT
SPAN BK	BEAM 1	0.0000	66 0 0.00	0.7083	0.2881	0.6471
	BEAM 2	8.2098	66 0 0.00	0.7083	0.2881	0.6471
	BEAM 3	8.2098	66 0 0.00	0.7083	0.2881	0.6471
	BEAM 4	8.2098	66 0 0.00	0.7083	0.2881	0.6471
	BEAM 5	8.2098	66 0 0.00	0.7083	0.2881	0.6471
	BEAM 6	8.2098	66 0 0.00	0.7083	0.2881	0.6471
	BEAM 7	8.2098	66 0 0.00	0.7083	0.2881	0.6471
	TOTAL	49.2586				
SPAN FWD	BEAM 1	0.0000	66 0 0.00	0.7083	0.2881	0.6471
	BEAM 2	8.2098	66 0 0.00	0.7083	0.2881	0.6471
	BEAM 3	8.2098	66 0 0.00	0.7083	0.2881	0.6471
	BEAM 4	8.2098	66 0 0.00	0.7083	0.2881	0.6471
	BEAM 5	8.2098	66 0 0.00	0.7083	0.2881	0.6471
	BEAM 6	8.2098	66 0 0.00	0.7083	0.2881	0.6471
	BEAM 7	8.2098	66 0 0.00	0.7083	0.2881	0.6471
	TOTAL	49.2586				

BENT REPORT

BENT NO. 33 (N 82 56 15.68 E)

DISTANCE BETWEEN STATION LINE AND BEAM 1, 53.5459 L

		BEAM SPAC. (C.L. BENT)	BEAM ANGLE D M S	DISTANCE FROM C.L. BENT TO C.L. BEARING ALONG BEAM	ALONG C.L. BT	PERP. TO C.L. BT
SPAN 32	BEAM 1	0.0000	66 0 0.00	0.7754	0.3154	0.7083
	BEAM 2	8.2098	66 0 0.00	0.7754	0.3154	0.7083
	BEAM 3	8.2098	66 0 0.00	0.7754	0.3154	0.7083
	BEAM 4	8.2098	66 0 0.00	0.7754	0.3154	0.7083
	BEAM 5	8.2098	66 0 0.00	0.7754	0.3154	0.7083
	BEAM 6	8.2098	66 0 0.00	0.7754	0.3154	0.7083
	BEAM 7	8.2098	66 0 0.00	0.7754	0.3154	0.7083
	TOTAL	49.2586				

BEAM REPORT, SPAN 1

	HORIZONTAL DISTANCE C-C BENT	C-C BRG.	TRUE DISTANCE BOT. BM. FLG.
BEAM 1	118.0000	116.5163	117.6667
BEAM 2	118.0000	116.5163	117.6667
BEAM 3	118.0000	116.5163	117.6667
BEAM 4	118.0000	116.5163	117.6667
BEAM 5	118.0000	116.5163	117.6667
BEAM 6	118.0000	116.5163	117.6667
BEAM 7	118.0000	116.5163	117.6667

BEAM REPORT, SPANS 2 - 21

	HORIZONTAL DISTANCE C-C BENT	C-C BRG.	TRUE DISTANCE BOT. BM. FLG.
BEAM 1	118.0000	116.5833	117.6667
BEAM 2	118.0000	116.5833	117.6667
BEAM 3	118.0000	116.5833	117.6667
BEAM 4	118.0000	116.5833	117.6667
BEAM 5	118.0000	116.5833	117.6667
BEAM 6	118.0000	116.5833	117.6667
BEAM 7	118.0000	116.5833	117.6667

BEAM REPORT, SPAN 22

	HORIZONTAL DISTANCE C-C BENT	C-C BRG.	TRUE DISTANCE BOT. BM. FLG.
BEAM 1	115.5700	114.1533	115.2407
BEAM 2	115.5700	115.1533	115.2409
BEAM 3	115.5700	114.1533	115.2412
BEAM 4	115.5700	114.1533	115.2414
BEAM 5	115.5700	114.1533	115.2417
BEAM 6	115.5700	114.1533	115.2419
BEAM 7	115.5700	114.1533	115.2422

BEAM REPORT, SPANS 23

	HORIZONTAL DISTANCE C-C BENT	C-C BRG.	TRUE DISTANCE BOT. BM. FLG.
BEAM 1	119.2100	117.7933	118.8859
BEAM 2	119.2100	117.7933	118.8859
BEAM 3	119.2100	117.7933	118.8859
BEAM 4	119.2100	117.7933	118.8859
BEAM 5	119.2100	117.7933	118.8859
BEAM 6	119.2100	117.7933	118.8859
BEAM 7	119.2100	117.7933	118.8859

BEAM REPORT, SPAN 24

	HORIZONTAL DISTANCE C-C BENT	C-C BRG.	TRUE DISTANCE BOT. BM. FLG.
BEAM 1	119.2200	117.7933	118.8859
BEAM 2	119.2200	117.7933	118.8859
BEAM 3	119.2200	117.7933	118.8859
BEAM 4	119.2200	117.7933	118.8859
BEAM 5	119.2200	117.7933	118.8859
BEAM 6	119.2200	117.7933	118.8859
BEAM 7	119.2200	117.7933	118.8859

BEAM REPORT, SPAN 25

	HORIZONTAL DISTANCE C-C BENT	C-C BRG.	TRUE DISTANCE BOT. BM. FLG.
BEAM 1	118.0000	116.5833	117.6728
BEAM 2	118.0000	116.5833	117.6726
BEAM 3	118.0000	116.5833	117.6724
BEAM 4	118.0000	116.5833	117.6722
BEAM 5	118.0000	116.5833	117.6720
BEAM 6	118.0000	116.5833	117.6718
BEAM 7	118.0000	116.5833	117.6716

BEAM REPORT, SPAN 26

	HORIZONTAL DISTANCE C-C BENT	C-C BRG.	TRUE DISTANCE BOT. BM. FLG.
BEAM 1	118.0000	116.5833	117.6672
BEAM 2	118.0000	116.5833	117.6671
BEAM 3	118.0000	116.5833	117.6671
BEAM 4	118.0000	116.5833	117.6670
BEAM 5	118.0000	116.5833	117.6670
BEAM 6	118.0000	116.5833	117.6669
BEAM 7	118.0000	116.5833	117.6669

BEAM REPORT, SPAN 27

	HORIZONTAL DISTANCE C-C BENT	C-C BRG.	TRUE DISTANCE BOT. BM. FLG.
BEAM 1	118.0000	116.5833	117.6678
BEAM 2	118.0000	116.5833	117.6679
BEAM 3	118.0000	116.5833	117.6680
BEAM 4	118.0000	116.5833	117.6681
BEAM 5	118.0000	116.5833	117.6682
BEAM 6	118.0000	116.5833	117.6684
BEAM 7	118.0000	116.5833	117.6685

BEAM REPORT, SPAN 28

	HORIZONTAL DISTANCE C-C BENT	C-C BRG.	TRUE DISTANCE BOT. BM. FLG.
BEAM 1	118.0000	116.5833	117.6740
BEAM 2	118.0000	116.5833	117.6741
BEAM 3	118.0000	116.5833	117.6743
BEAM 4	118.0000	116.5833	117.6744
BEAM 5	118.0000	116.5833	117.6746
BEAM 6	118.0000	116.5833	117.6747
BEAM 7	118.0000	116.5833	117.6749

BEAM REPORT, SPANS 29 - 31

	HORIZONTAL DISTANCE C-C BENT	C-C BRG.	TRUE DISTANCE BOT. BM. FLG.
BEAM 1	118.0000	116.5833	117.6758
BEAM 2	118.0000	116.5833	117.6758
BEAM 3	118.0000	116.5833	117.6758
BEAM 4	118.0000	116.5833	117.6758
BEAM 5	118.0000	116.5833	117.6758
BEAM 6	118.0000	116.5833	117.6758
BEAM 7	118.0000	116.5833	117.6758

BEAM REPORT, SPAN 32

	HORIZONTAL DISTANCE C-C BENT	C-C BRG.	TRUE DISTANCE BOT. BM. FLG.
BEAM 1	118.0000	116.5163	117.6758
BEAM 2	118.0000	116.5163	117.6758
BEAM 3	118.0000	116.5163	117.6758
BEAM 4	118.0000	116.5163	117.6758
BEAM 5	118.0000	116.5163	117.6758
BEAM 6	118.0000	116.5163	117.6758
BEAM 7	118.0000	116.5163	117.6758

STATE OF TEXAS
C. B. MYLIUS
19909
REGISTERED
PROFESSIONAL ENGINEER

THE SEAL APPEARING ON THIS DOCUMENT WAS AUTHORIZED BY C. B. MYLIUS, P.E. 19909 ON 2-1, 1992.

CITY OF HOUSTON

APPROVALS

WATER DESIGN	STREET, BRIDGE & ROW
WATER QUALITY	STORM SEWER DESIGN
CONSTRUCTION	WASTEWATER DESIGN
TRAFFIC & TRANSPORTATION	PLANNING & DEVELOPMENT DEPT.

ASST. DIRECTOR OF CAPITAL PROJECTS — DIRECTOR OF CAPITAL PROJECTS

NO.	DATE	REVISION	APPROV.
4			
3			
2			
1			

WEST LAKE HOUSTON PARKWAY
WEST FORK SAN JACINTO RIVER BRIDGE

FRAMING PLAN

Turner Collie & Braden Inc.
ENGINEERS + PLANNERS

Unit JANAK	Scale 1"=20'-0"	Date AUGUST, 1991	
Designed EDC	Checked CM	Job No. 62-68012-020 Cont.	
Drawn DDH	Approved	Sheet 24 of 50	

WLH, LHP2FRAM, DDH, 12-11-91

DESIGNED BEAMS (DEPRESSED STRANDS)

STRUCTURE	SPAN	BEAM NO.	* BEAM TYPE	NON-STD. STRAND PATTERN	PRESTRESSING STRANDS TOTAL NO.	TOTAL SIZE	TOTAL STRGTH.	TOTAL "e" ℄ In.	"e" END In.	DEPRESSED NO.	DEPRESSED TO	CONCRETE RELEASE STRENGTH f'ci (psi)	CONCRETE MINIMUM 28 DAY COMP. STRENGTH f'c (psi)	OPTIONAL DESIGN DN. LOAD COMP. STRESS (TOP ℄) fct (psi)	OPTIONAL DESIGN DN. LOAD TENSILE STRESS (BOTT. ℄) fcb (psi)	OPTIONAL DESIGN REQUIRED MINIMUM ULTIMATE MOMENT CAPACITY (Ft Kips)
WEST LAKE HOUSTON PARKWAY WEST FORK SAN JACINTO RIVER BRIDGE	1-21,25-32	ALL	IV	—	56	1/2"	270K	18.89	10.32	12	A-52	5910	7645	4165	4447	7210
	22	ALL	IV	—	52	1/2"	270K	19.29	11.21	10	A-52	5715	7222	3988	4279	6974
	23-24	ALL	IV	—	58	1/2"	270K	18.68	10.41	12	A-52	6138	7869	4255	4531	7329

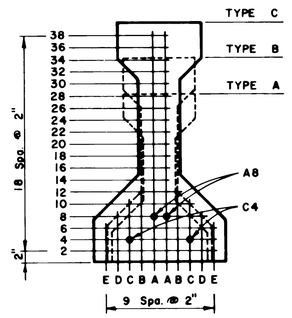

TYPES A, B, & C BMS.

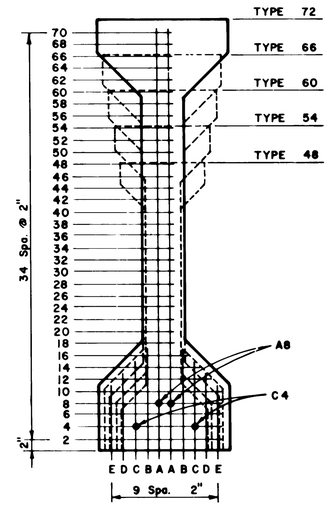

TYPES 48, 54, 60, 66 & 72 BMS.

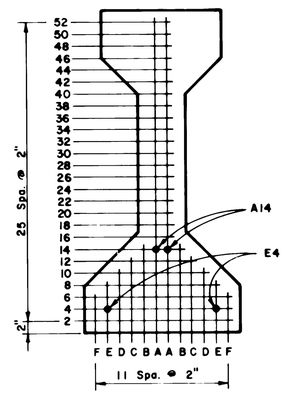

AASHTO TYPE IV BM.

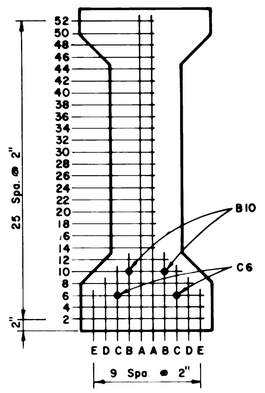

TYPE 54 (MOD.) BM.

MINIMUM NUMBER OF 1/2" STRANDS										
TYPE	A	B	C	48	54	* 5M	60	66	72	IV
NO.	6	8	10	8	10	18	14	16	18	18

* 5M Denotes Type 54 (MOD.) Beam.

NON - STANDARD STRAND PATTERNS	
PATTERN	STRAND ARRANGEMENT AT ℄ OF BEAM

GENERAL NOTES:

Designed in accordance with current A.A.S.H.T.O. Specifications.

All concrete shall be in accordance with Item 423.

When shown on this sheet, the fabricator has the option of furnishing either the designed depressed strand beam or an approved optional beam design.

Prestressed losses for the designed beams have been calculated according to the A.A.S.H.T.O. 1989 Specifications for a relative humidity of 75 %. Optional designs shall likewise conform.

Certain beams with depressed strands are subject to cracking in the end of the beam. When such cracks occur, all subsequent beams of the same type and strand pattern shall have strands wrapped in the following manner:
1. Alternate rows of depressed strands shall be wrapped for 2 feet from each end of the beam.
2. One half of the straight strands, as nearly as possible, shall be wrapped for 4 feet from each end of the beam.
3. The wrapping pattern shall be symmetrical about the vertical axis of the beam for both depressed and straight strands.
4. Strands shall be wrapped so that the centers of gravity of the depressed strands and the straight strands will remain within 1 inch of their original location.
5. Strands shall be tightly wrapped with plastic tubing. Both ends and the seam of the tube shall be sealed with waterproof tape.

6. Revised shop drawings will not be required, but wrapping patterns, and the beams affected, shall appear on the record drawings.

For depressed strand designed beams, strands shall be located as low as possible on the 2" grid system shown hereon, unless a non-standard strand pattern is indicated. Fill Row "2", then Row "4", then Row "6", etc., beginning each row in the "A" position and working outward until the required number of strands is reached. All strands in the "A" position shall be depressed, maintaining the 2" spacing so that the upper two strands are in the position shown in the table at the beam ends.

Initial pretension for 1/2" 270 K strands = 28.9 K for regular stress relieved strand or 31.0 K for low relaxation strands.
Design shown, utilizes low relaxation strands with initial pretension = 31.0 K.

REPRODUCED FROM
STATE DEPARTMENT OF HIGHWAYS
AND PUBLIC TRANSPORTATION
PRESTRESSED CONCRETE BEAMS
(NON-STANDARD SPANS)
GpNS REV. 5-84

NO.	DATE	REVISION	APPROV.
4			
3			
2			
1			

WEST LAKE HOUSTON PARKWAY
WEST FORK SAN JACINTO RIVER BRIDGE

PRESTRESSED BEAM DETAILS

1 OF 2

STATE OF TEXAS
C. B. MYLIUS
19909
REGISTERED
PROFESSIONAL ENGINEER
2-6-92

Turner Collie & Braden Inc.
ENGINEERS • PLANNERS

Unit JANAK	Scales N.T.S.	Date DECEMBER, 1991	
Designed	Checked CBM	Job No. 62-68012-020 Contract	
Drawn THD	Approved	Sheet 25	of 50

311863

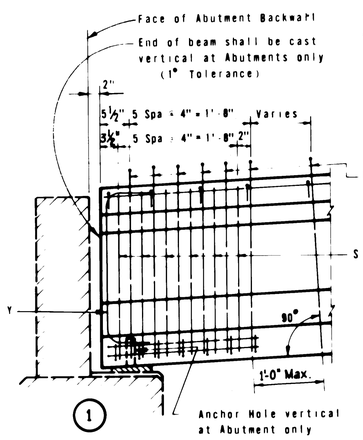

① ELEV. OF BM. AT ABUTMENT

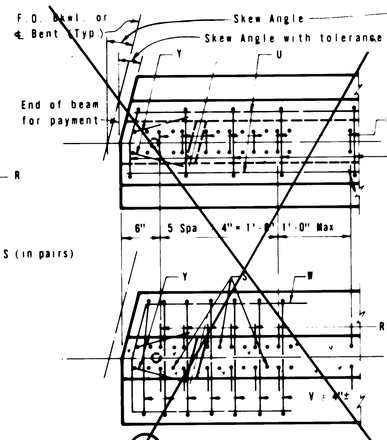

② PLAN - 15° SKEW

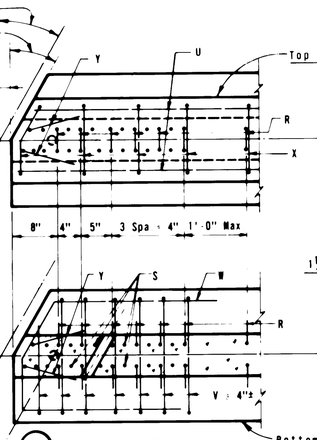

③ PLAN - 24° SKEW

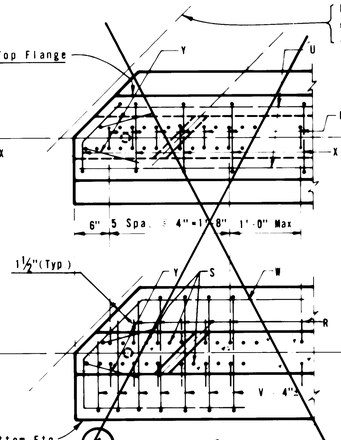

④ PLAN - 45° SKEW

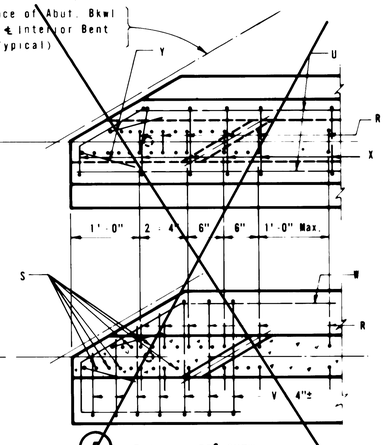

⑤ PLAN - 60° SKEW

NOTE:
It is permissible for bars or strands to come in contact with materials used in forming anchor and diafram holes.

NOTE
Reinforcing patterns shown above are to be used as guides in determining the reinforcement for the actual beam type and skew angle used. In general the distances between consecutive Bars R and or S shall be 2". This spacing may be varied in order to avoid diafram holes, however a minimum cross sectional area equivalent to that of Bars R and S in square beam end shall be provided.

DETAILS OF SKEWED BEAM ENDS

NOTE:
See SLAB DETAIL drawings for location of BRIDGE DRAIN support inserts for BEAM ⑥

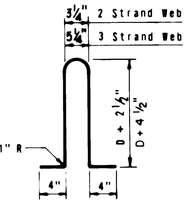

BARS R ~ #4

Ty IV Bms #7
All others #5

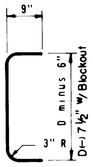

BARS S

BARS Y ~ #6

Splices permitted (40' Min. C-C Splices)
No portion of bar less than 10'

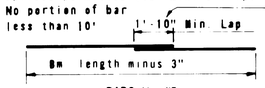

BARS U #5

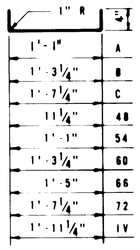

BARS V ~ #3

Optional fabrication (Applies to Types B C 72 and AASHO IV Bms only)

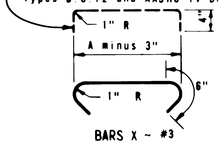

BARS X ~ #3

NOTE: Width tolerance for Bars V = ±1/4"

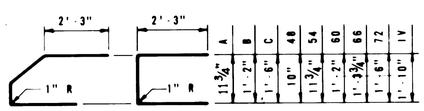

BARS W ~ #5

NOTE: All reinforcing bars for beams shall be ASTM Grade 60 steel.

GENERAL NOTES:

Designed in accordance with current A.A.S.H.O. Specifications.

All concrete shall be in accordance with Item 423.

Bottom corners of all beam flanges and outside corners of exterior beam ends shall be chamfered ¾" or rounded to a ¾" radius.

⑥ ELEVATION OF BEAM

** NOTE Anchorage holes may be tapered (4¾" x 1⅝" Exp End) (1⅝" Fixed End) at base. If holes are formed with sheet metal, forms may be left in place. Holes at fixed end may extend full depth of beam. Plug top or fill with asphalt mastic. At the option of the Fabricator, inside beams may be furnished with anchor holes.
See BRIDGE LAYOUTS for location of Expansion (E) and Fixed (F) ends of beams.

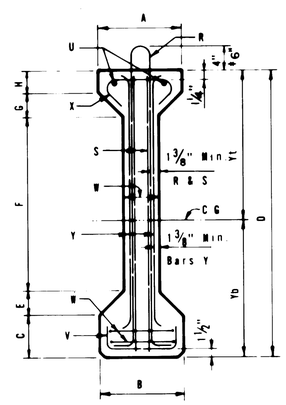

⑦ TYPES 48, 54, 60, 66 & 72 BEAMS

* If Prestressed Concrete Panels are used.

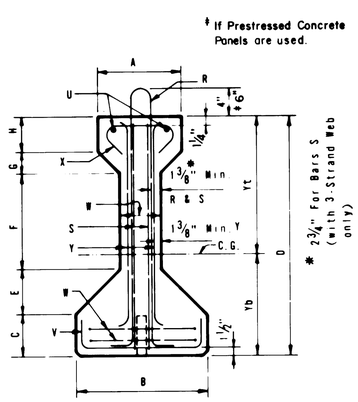

⑧ TYPES A, B, C, & A.A.S.H.O. IV BMS.

BEAM DIMENSIONS AND SECTION PROPERTIES

BEAM TYPE	A IN.	B IN.	C IN.	D IN.	E IN.	F IN.	G IN.	H IN.	J IN.	K IN.	W IN.	Yt IN.	Yb IN.	AREA IN.²	I IN.⁴	WT. P.L.F. LB.
A	12	16	5	28	5	11	3	4	13	15	6	15.39	12.61	275.4	22.658	287
B	12	18	6	34	5¾	14	2¾	5½	17	15	6½	19.07	14.93	360.3	43.177	375
C	14	22	7	40	7½	16	3½	6	21	15	7	22.91	17.09	494.9	82.602	516
48	14	14	7	48	4	29½	4	3½	31	15	6	25.13	22.87	403.4	101.950	420
54	16	16	8	54	5	32	5	4	35	15	6	28.47	25.53	493.4	164.022	514
60	18	18	9	60	5½	35½	5½	4½	39	15	7	31.59	28.41	628.4	255.319	655
66	20	20	10	66	6½	38	6½	5	43	15	7	34.93	31.07	740.9	374.688	772
72	22	22	11	72	7½	40½	7½	5½	47	15	7	38.27	33.73	863.4	532.060	899
IV	20	26	8	54	9	23	6	8	33	18	8	29.25	24.75	788.4	260.403	821

Tolerance for Dimensions J & K = (+½"; -1")

REPRODUCED FROM
TEXAS HIGHWAY DEPARTMENT
BRIDGE DIVISION
PRESTRESSED CONCRETE BEAMS
BEAMS DETAILS GpA-2 REV. 2-86

NO.	DATE	REVISION	APPROV.
4			
3			
2			
1			

WEST LAKE HOUSTON PARKWAY
WEST FORK SAN JACINTO RIVER BRIDGE

PRESTRESSED BEAM DETAILS

2 OF 2

Turner Collie & Braden Inc.
ENGINEERS • PLANNERS

STATE OF TEXAS
C. B. MYLIUS
19909
REGISTERED PROFESSIONAL ENGINEER

Unit JANAK	Scales N.T.S.	Date DECEMBER, 1991	
Designed	Checked	Job No.6268012-020 Contract	
Drawn THD	Approved	Sheet 26 of 50	

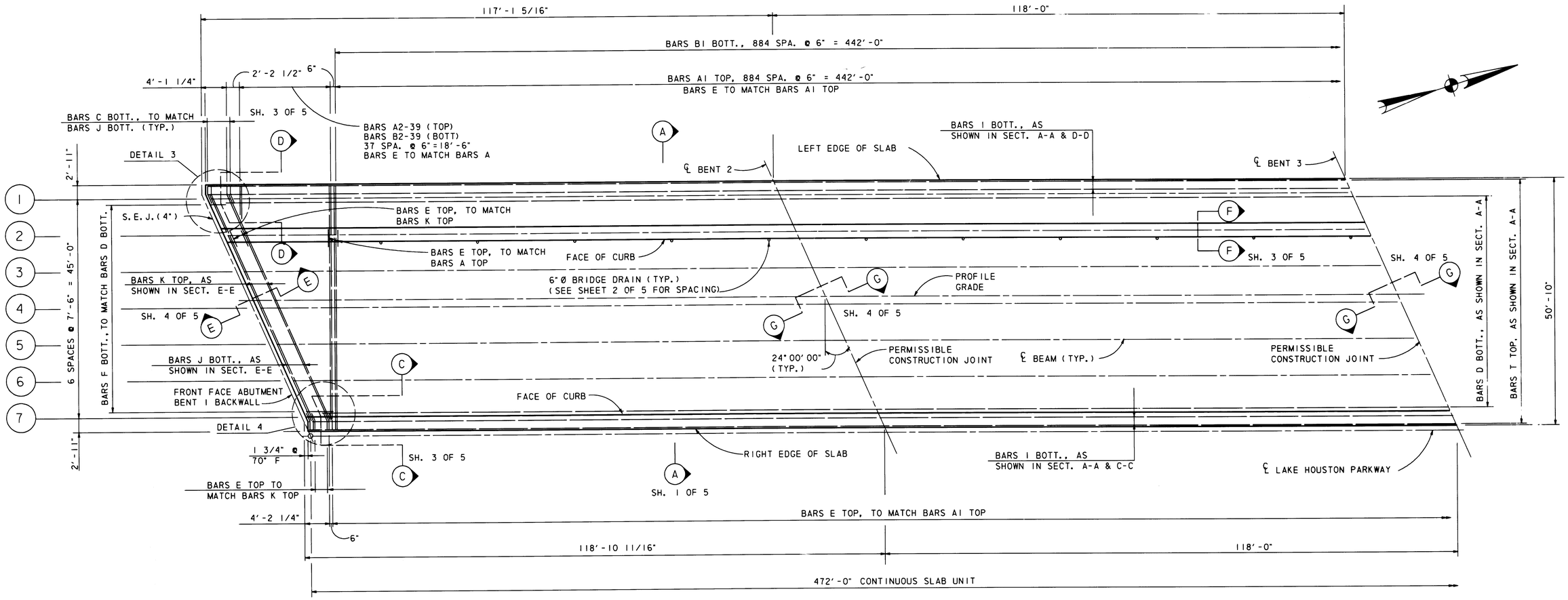

PLAN
SCALE : 1" = 10'-0"
(SPANS 1-4 SHOWN)
(SPANS 29-32 OPPOSITE HAND)

NOTE: SEE SLAB DETAILS SHEET 5 OF 5 FOR NOTES AND BRIDGE DRAIN DETAILS.

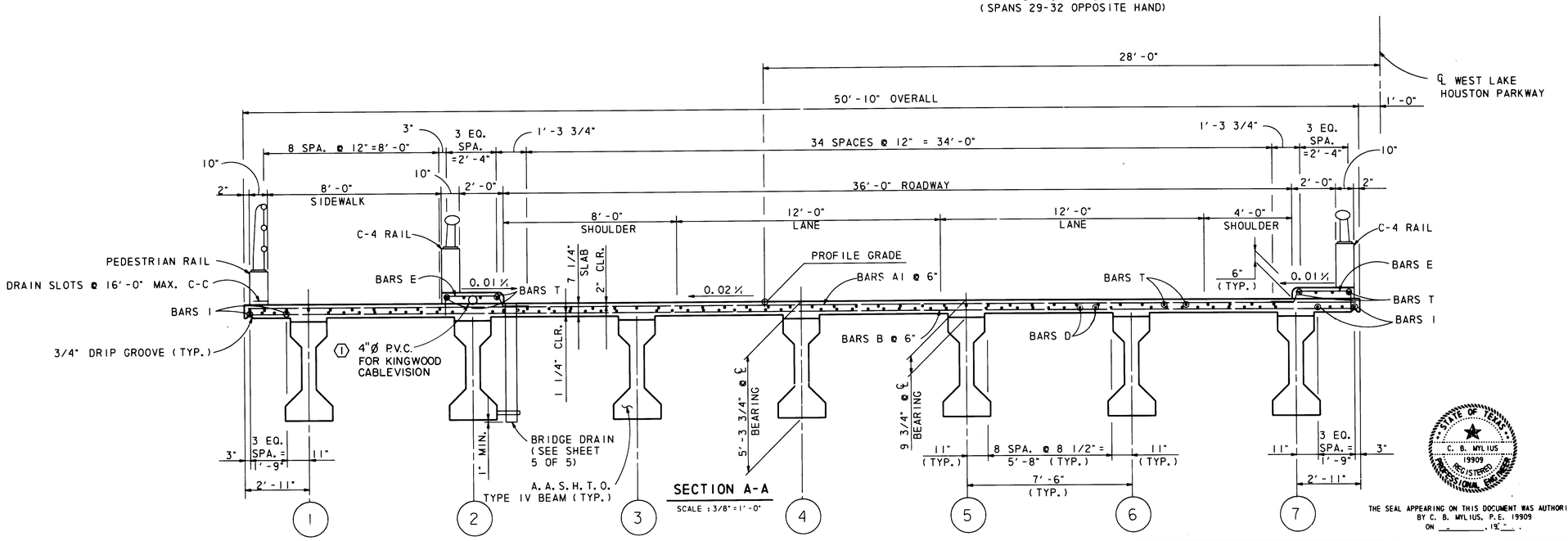

SECTION A-A
SCALE : 3/8" = 1'-0"

THE SEAL APPEARING ON THIS DOCUMENT WAS AUTHORIZED BY C. B. MYLIUS, P.E. 19909 ON _____, 19__.

CITY OF HOUSTON	
APPROVALS	
WATER DESIGN	STREET, BRIDGE & R.O.W.
WATER QUALITY	STORM SEWERS DESIGN
CONSTRUCTION	WASTEWATER DESIGN
TRAFFIC & TRANSPORTATION	PLANNING & DEVELOPMENT DEPT.
ASST. DIRECTOR OF CAPITAL PROJECTS	DIRECTOR OF CAPITAL PROJECTS

NO.	DATE	REVISION	APPROV.
4			
3			
2			
1	6-17-92	ADDED 4"Ø P.V.C. IN SLAB	CBM

WEST LAKE HOUSTON PARKWAY
WEST FORK SAN JACINTO RIVER BRIDGE

SLAB DETAILS

1 OF 5

Turner Collie & Braden Inc.
ENGINEERS • PLANNERS

Unit JANAK	Scale: AS SHOWN	Date AUGUST, 1991	
Designed EDC	Checked AHB	Job No. 62-68012-020 Contract	
Drawn DDH	Approved	Sheet 27 of 50	

WLH, LHP2SLAB, DD:1, 12-11-91

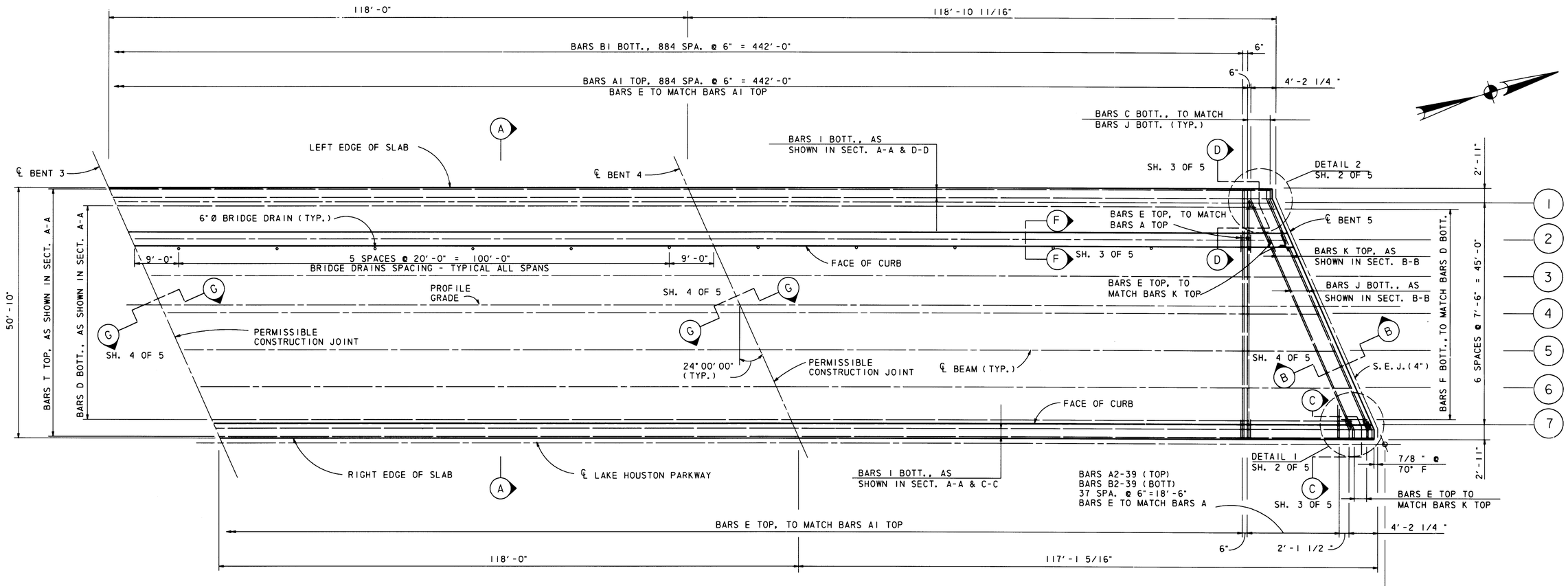

PLAN

SCALE : 1" = 10'-0"

(SPANS 1-4 SHOWN)
(SPANS 29-32 OPPOSITE HAND)

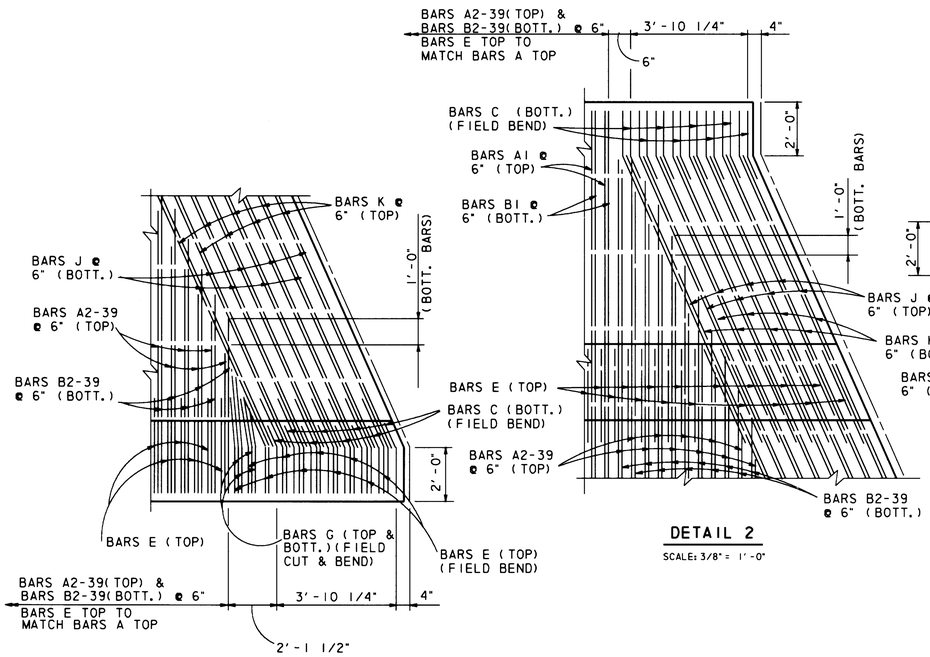

DETAIL 1

SCALE: 3/8" = 1'-0"

DETAIL 2

SCALE: 3/8" = 1'-0"

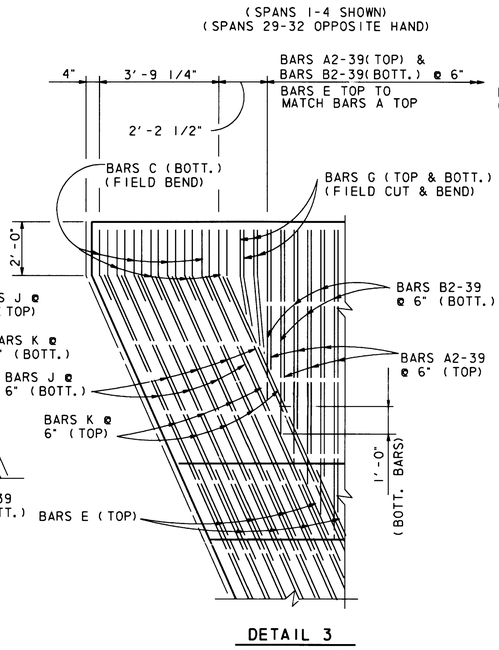

DETAIL 3

SCALE: 3/8" = 1'-0"

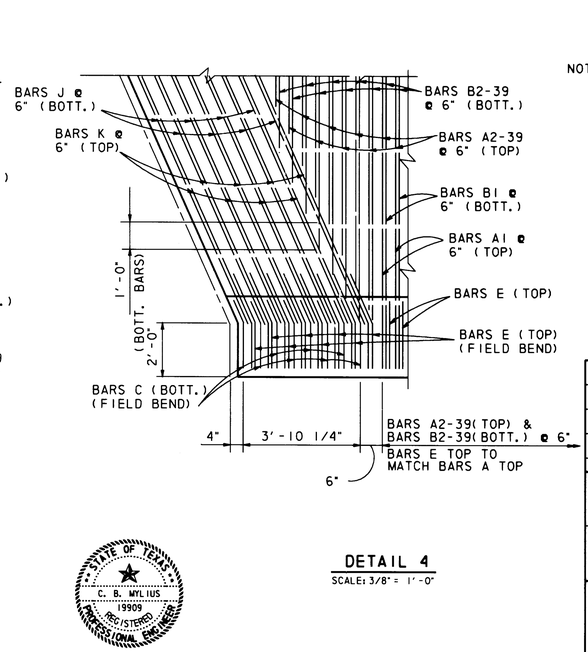

DETAIL 4

SCALE: 3/8" = 1'-0"

NOTE: SEE SLAB DETAILS SHEET 5 OF 5 FOR NOTES.

THE SEAL APPEARING ON THIS DOCUMENT WAS AUTHORIZED BY C. B. MYLIUS, P.E. 19909 ON 2-4, 1992.

CITY OF HOUSTON

APPROVALS

WATER DESIGN 5/19/92	STREET & DRAINAGE DESIGN 5/14/92
WATER QUALITY	STORM SEWERS DESIGN 5/13/92
CONSTRUCTION 5/27/92	WASTEWATER DESIGN
TRAFFIC & TRANSPORTATION	PLANNING & DEVELOPMENT DEPT.
ASST. DIRECTOR OF CAPITAL PROJECTS	DIRECTOR OF CAPITAL PROJECTS

NO.	DATE	REVISION	APPROV.
4			
3			
2			
1			

WEST LAKE HOUSTON PARKWAY
WEST FORK SAN JACINTO RIVER BRIDGE

SLAB DETAILS

2 OF 5

Turner Collie & Braden Inc.
ENGINEERS • PLANNERS

Unit JANAK	Scale: AS SHOWN	Date AUGUST, 1991	
Designed EDC	Checked AHB	Job No. 62-68012-020 Contract	
Drawn DDH	Approved	Sheet 28 of 50	

WLH, LHP2SLAB, DDH, 12-11-91

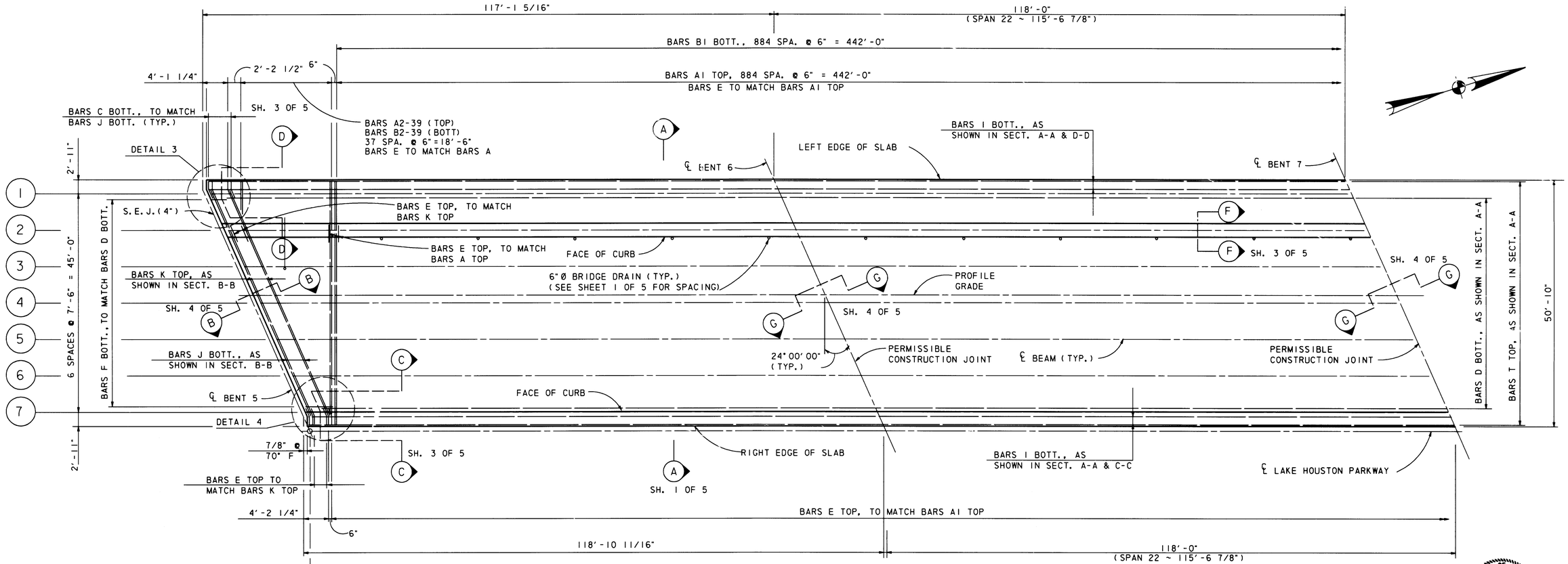

PLAN
SCALE : 1"=10'-0"
(SPANS 5-8 SHOWN)
(SPANS 9-28 SIMILAR)

NOTE: SEE SLAB DETAILS SHEET 5 OF 5 FOR NOTES AND BRIDGE DRAIN DETAILS.

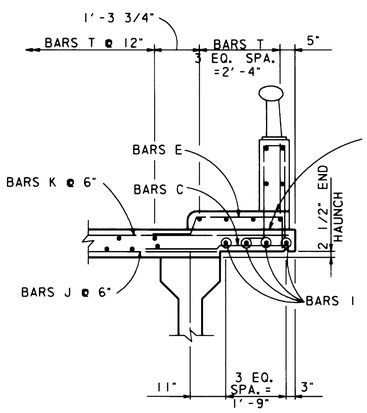

SECTION C-C
SCALE : 1/2"=1'-0"

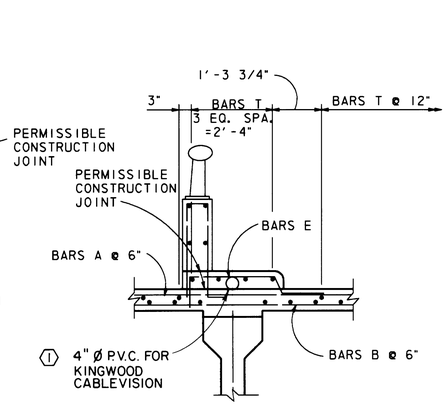

SECTION F-F
SCALE : 1/2"=1'-0"

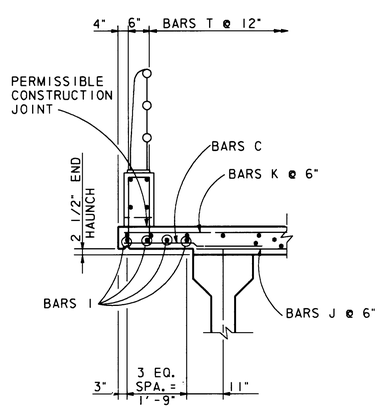

SECTION D-D
SCALE : 1/2"=1'-0"

6'-2 1/8"	A 2
47'-11"	A 39
27'-0 1/2"	A 2-39(AVG.)

BARS A
N.T.S.

7'-2 1/8"	B 2
48'-11"	B 39
28'-0 1/2"	B 2-39(AVG.)

BARS B
N.T.S.

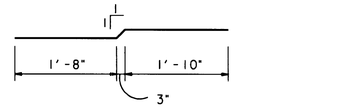

BARS C
N.T.S.

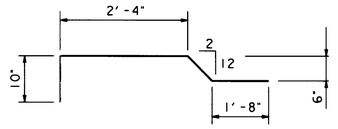

BARS E
N.T.S.

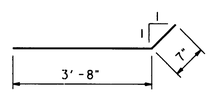

BARS F
N.T.S.

STATE OF TEXAS
C. B. MYLIUS
19909
REGISTERED
PROFESSIONAL ENGINEER

THE SEAL APPEARING ON THIS DOCUMENT WAS AUTHORIZED BY C. B. MYLIUS, P.E. 19909 ON 2-4, 1992.

CITY OF HOUSTON

APPROVALS

WATER DESIGN — 5/19/92	STREET, BRIDGE & R.O.W. — 5-14-92
WATER QUALITY — 6/1/92	STORM SEWERS DESIGN — 5/14/92
CONSTRUCTION — 5/27/92	WASTEWATER DESIGN — 5/14/92
TRAFFIC & TRANSPORTATION	PLANNING & DEVELOPMENT DEPT.

ASST. DIRECTOR OF CAPITAL PROJECTS — DIRECTOR OF CAPITAL PROJECTS — 6-1-92

NO.	DATE	REVISION	APPROV.
4			
3			
2			
1	6-17-92	ADDED 4" Ø P.V.C. IN SLAB	CBM

WEST LAKE HOUSTON PARKWAY
WEST FORK SAN JACINTO RIVER BRIDGE

SLAB DETAILS

3 OF 5

Turner Collie & Braden Inc.
ENGINEERS • PLANNERS

Unit JANAK	Scale: AS SHOWN	Date AUGUST. 1991	
Designed EDC	Checked AHB	Job No. 62-68012-020 Contract	
Drawn DDH	Approved	Sheet 29 of 50	

WLH, LHP2SLAB, DDH, 12-11-91

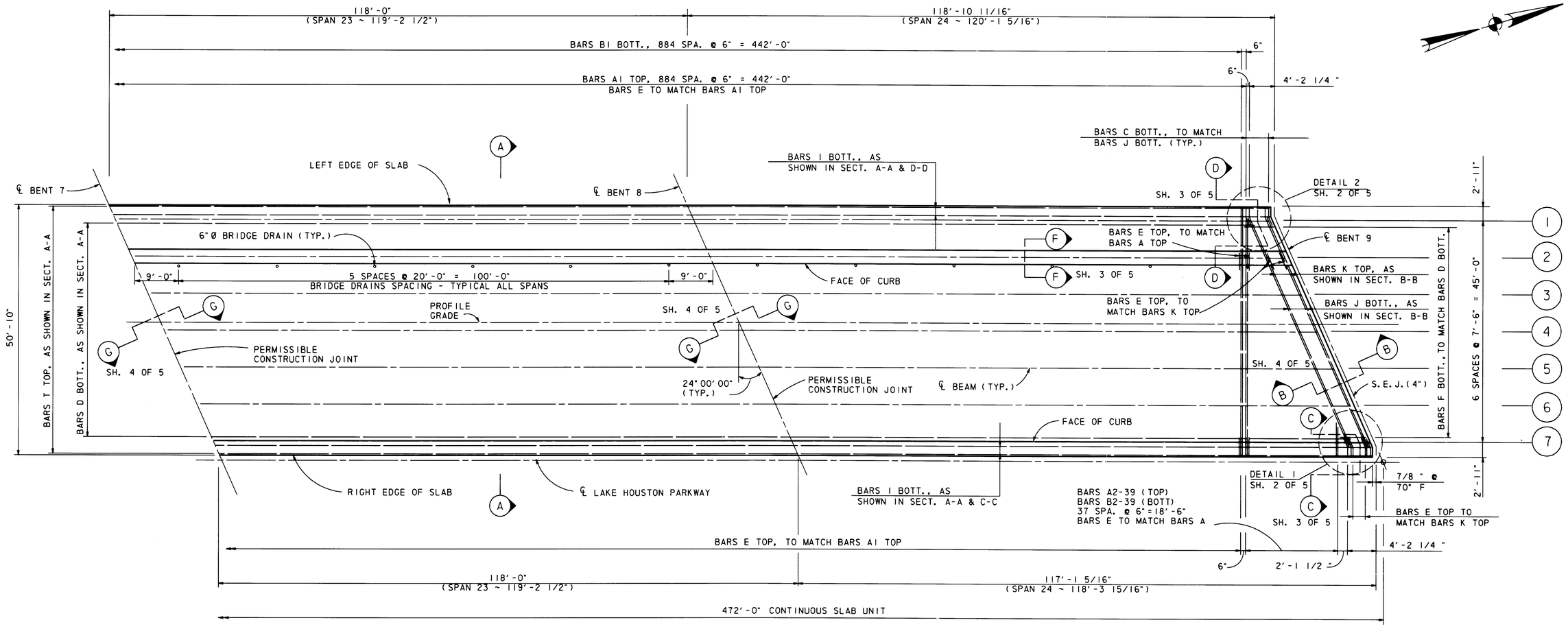

PLAN

SCALE : 1" = 10'-0"

(SPANS 5-8 SHOWN)
(SPANS 9-28 SIMILAR)

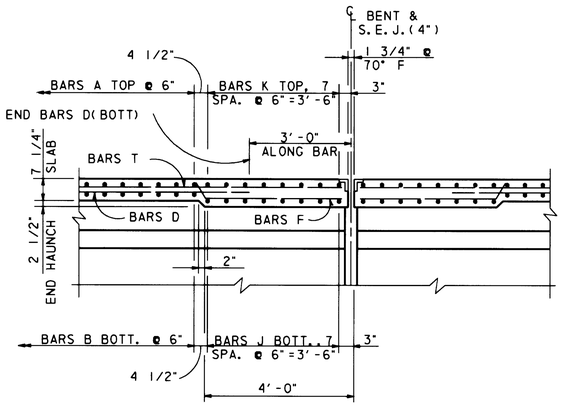

SECTION B-B

SCALE : 1/2" = 1'-0"

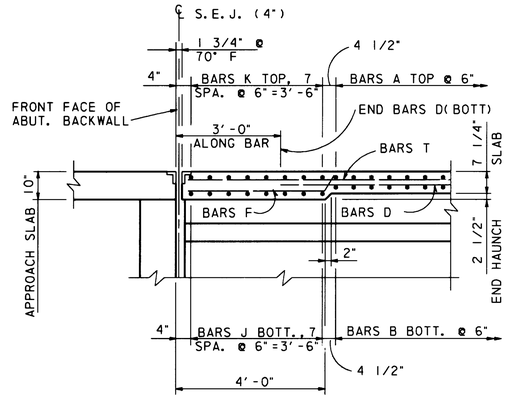

SECTION E-E

SCALE : 1/2" = 1'-0"

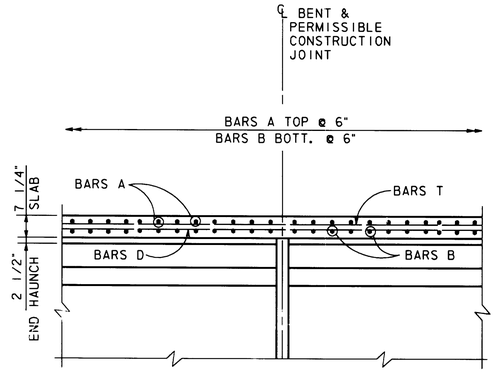

SECTION G-G

SCALE : 1/2" = 1'-0"

NOTE: SEE SLAB DETAILS SHEET 5 OF 5 FOR NOTES AND BRIDGE DRAIN DETAILS.

CITY OF HOUSTON

APPROVALS

WATER DESIGN — 5/19/92
STREET, BRIDGE & R.O.W. — 5/13/92
WATER QUALITY CONSTRUCTION — 6/1/92
STORM SEWERS DESIGN — 5/16/92
WASTEWATER DESIGN — 5/13/92
TRAFFIC & TRANSPORTATION — 5/27/92
PLANNING & DEVELOPMENT DEPT.

ASST. DIRECTOR OF CAPITAL PROJECTS — DIRECTOR OF CAPITAL PROJECTS

NO.	DATE	REVISION	APPROV.
4			
3			
2			
1			

WEST LAKE HOUSTON PARKWAY
WEST FORK SAN JACINTO RIVER BRIDGE

SLAB DETAILS

4 OF 5

Turner Collie & Braden Inc.
ENGINEERS • PLANNERS

THE SEAL APPEARING ON THIS DOCUMENT WAS AUTHORIZED BY C. B. MYLIUS, P.E. 19909 ON 5-21, 1992.

Unit JANAK	Scale: AS SHOWN	Date AUGUST, 1991	
Designed EDC	Checked AHB	Job No. 62-68012-020 Contract	
Drawn DDH	Approved	Sheet 30 of 50	

WLH, LHP2SLAB, DDH, 12-11-91

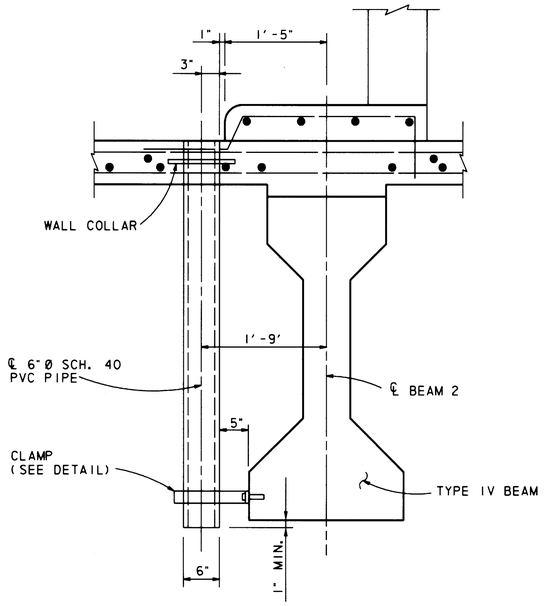

BRIDGE DRAIN DETAIL

SCALE: 1" = 1'-0"
(LOOKING DOWN STATION)

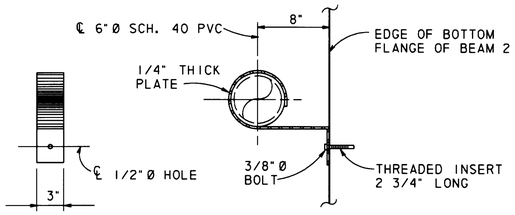

STEEL CLAMP DETAILS

SCALE: 1 1/2" = 1'-0"

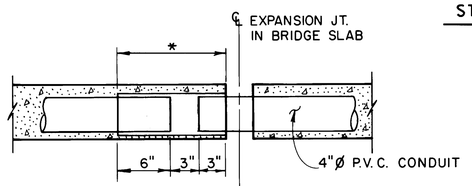

* 12"Ø GALVANIZED FLASHING MIN. 26 GA. OR THIN WALL ALUM. TUBING

① DETAIL OF 4" Ø P.V.C. CONDUIT AT BRIDGE EXPANSION JT.

BRIDGE DRAIN NOTES:

1. FOR BRIDGE DRAIN SPACING SEE SHEET 2 OF 5.
2. ADJUST DECK REINFORCING TO MISS DRAIN; DO NOT CUT OR OMIT ANY REINFORCING BARS.
3. BOLTS SHALL MEET THE REQUIREMENTS OF ANSI B18.2.1.
4. ALL CLAMPS TO BE ASTM A36 STEEL. ALL CLAMPS AND BOLTS TO BE GALVANIZED.
5. COST OF STEEL CLAMPS, BOLTS AND THREADED INSERTS TO BE INCIDENTAL TO THE BRIDGE DRAIN ITEM.

SLAB DETAILS NOTES:

1. ALL CONCRETE SHALL BE CLASS B-1.
2. ALL REINFORCING STEEL SHALL BE ASTM A-615, GRADE 60.
3. MINIMUM RATE OF CONCRETE PLACEMENT SHALL BE 40 C.Y. PER HOUR IF CONTINUOUS PLACEMENT IS USED.
4. PRECAST DECK PANELS WILL NOT BE PERMITTED.
5. PERMANENT METAL DECK FORMS WILL BE ALLOWED. SUBMIT SHOP DRAWINGS FOR APPROVAL AND COORDINATE WITH OTHER PERTINENT ITEMS OF WORK. NO SEPARATE PAY.
6. TRANVERSE SCREED WILL BE PERMITTED.

BILL OF REINFORCING STEEL

	BAR	NO.	SIZE	SPACING	LENGTH	WEIGHT
	A1	7,080	#5	SHOWN	50'-6"	372,914
	A2-39	608	#5		27'-1"	17,175
					(AVG.)	
	B1	7,080	#5		50'-6"	372,914
	B2-39	608	#5		28'-1"	17,809
					(AVG.)	
	C	256	#5		3'-10"	1,024
*	D	432	#5		477'-8"	215,225
	E	15,096	#5		5'-5"	85,287
	F	864	#5		4'-3"	3,830
	G	64	#5		5'-0"	334
**	I	64	#5		484'-10"	32,364
	J	128	#5		50'-8"	6,764
	K	128	#5		54'-11"	7,332
**	T	400	#5	SHOWN	484'-10"	202,273
					TOTAL	1,335,245

ESTIMATED QUANTITIES

	ITEM	UNIT	QUANTITY
⊡	REINFORCING STEEL	LBS.	1,335,245
⊡	CL. B-1 CONC. (DECK)	C.Y.	4,871.6
	TY. IV PRESTR. CONC. BEAMS	L.F.	26,357
	SEALED EXPANSION JT. (4")	L.F.	488.8
	TY. C-4 TRAFFIC RAIL	L.F.	7,682.0
	PEDESTRIAN RAIL	L.F.	3,881.0
	CL.- B-1 CONC. (DECK)	S.Y.	21,327.4
①	P.V.C. PIPE (4"Ø)	L.F.	3,881.0

* INCLUDES 7~1'-8" LAPS.
** INCLUDES 8~1'-8" LAPS.
⊡ FOR CONTRACTOR'S INFORMATION ONLY.

CITY OF HOUSTON

APPROVALS

WATER DESIGN	STREET, BRIDGE & ROW
WATER QUALITY	STORM SEWERS DESIGN
CONSTRUCTION	WASTEWATER DESIGN
TRAFFIC & TRANSPORTATION	PLANNING & DEVELOPMENT DEPT.
ASST. DIRECTOR OF CAPITAL PROJECTS	DIRECTOR OF CAPITAL PROJECTS

NO.	DATE	REVISION	APPROV.
4			
3			
2			
①	6-17-92	ADDED DETAIL & QUANTITY FOR 4" Ø P.V.C. PIPE	CBM

WEST LAKE HOUSTON PARKWAY
WEST FORK SAN JACINTO RIVER BRIDGE

SLAB DETAILS

5 OF 5

THE SEAL APPEARING ON THIS DOCUMENT WAS AUTHORIZED BY C. B. MYLIUS, P.E. 19909 ON 6-1, 1992

STATE OF TEXAS · C. B. MYLIUS · 19909 · REGISTERED PROFESSIONAL ENGINEER

Turner Collie & Braden Inc.
ENGINEERS • PLANNERS

Unit JANAK	Scale: AS SHOWN	Date AUGUST, 1991	
Designed EDC	Checked AHB	Job No. 62-68012-020 Contract	
Drawn DDH	Approved	Sheet 31 of 50	

WLH, LHP2SLAB. DDH. 12-11-91

SLAB ELEVATIONS

SPAN	PT. NO.	LEFT SLAB LINE	BEAM 1	BEAM 2	BEAM 3	P.G. LINE	BEAM 4	BEAM 5	BEAM 6	BEAM 7	RIGHT SLAB LINE
1	1	58.251	58.311	58.464	58.618	58.739	58.771	58.924	59.078	59.231	59.291
	2	58.280	58.340	58.493	58.647	58.768	58.800	58.954	59.107	59.260	59.320
	3	58.310	58.369	58.523	58.676	58.797	58.829	58.983	59.136	59.289	59.349
	4	58.339	58.398	58.552	58.705	58.826	58.859	59.012	59.165	59.319	59.378
	5	58.368	58.428	58.581	58.734	58.855	58.888	59.041	59.194	59.348	59.407
2	1	58.369	58.429	58.582	58.736	58.857	58.889	59.042	59.196	59.349	59.409
	2	58.399	58.458	58.612	58.765	58.886	58.918	59.072	59.225	59.378	59.438
	3	58.428	58.487	58.641	58.794	58.915	58.947	59.101	59.254	59.408	59.467
	4	58.457	58.517	58.670	58.823	58.944	58.977	59.130	59.283	59.437	59.496
	5	58.486	58.546	58.699	58.853	58.974	59.006	59.159	59.313	59.466	59.526
3	1	58.488	58.547	58.701	58.854	58.975	59.007	59.161	59.314	59.467	59.527
	2	58.517	58.576	58.730	58.883	59.004	59.036	59.190	59.343	59.497	59.556
	3	58.546	58.606	58.759	58.912	59.033	59.066	59.219	59.372	59.526	59.585
	4	58.575	58.635	58.788	58.942	59.063	59.095	59.248	59.402	59.555	59.615
	5	58.604	58.664	58.817	58.971	59.092	59.124	59.277	59.431	59.584	59.644
4	1	58.606	58.665	58.819	58.972	59.093	59.125	59.279	59.432	59.586	59.645
	2	58.635	58.695	58.848	59.001	59.122	59.155	59.308	59.461	59.615	59.674
	3	58.664	58.724	58.877	59.031	59.152	59.184	59.337	59.491	59.644	59.704
	4	58.693	58.753	58.906	59.060	59.181	59.213	59.366	59.520	59.673	59.733
	5	58.723	58.782	58.936	59.089	59.210	59.242	59.396	59.549	59.702	59.762
5	1	58.724	58.784	58.937	59.090	59.211	59.244	59.397	59.550	59.704	59.763
	2	58.753	58.813	58.966	59.120	59.241	59.273	59.426	59.580	59.733	59.793
	3	58.782	58.842	58.995	59.149	59.270	59.302	59.455	59.609	59.762	59.822
	4	58.812	58.871	59.025	59.178	59.299	59.331	59.485	59.638	59.791	59.851
	5	58.841	58.900	59.054	59.207	59.328	59.360	59.514	59.667	59.820	59.880
6	1	58.842	58.902	59.055	59.209	59.329	59.362	59.515	59.669	59.822	59.882
	2	58.871	58.931	59.084	59.238	59.359	59.391	59.544	59.698	59.851	59.911
	3	58.901	58.960	59.114	59.267	59.388	59.420	59.574	59.727	59.880	59.940
	4	58.930	58.989	59.143	59.296	59.417	59.449	59.603	59.756	59.909	59.969
	5	58.959	59.019	59.172	59.325	59.446	59.479	59.632	59.785	59.939	59.998
7	1	58.960	59.020	59.173	59.327	59.448	59.480	59.633	59.787	59.940	60.000
	2	58.990	59.049	59.203	59.356	59.477	59.509	59.663	59.816	59.969	60.029
	3	59.019	59.078	59.232	59.385	59.506	59.538	59.692	59.845	59.998	60.058
	4	59.048	59.108	59.261	59.414	59.535	59.568	59.721	59.874	60.028	60.087
	5	59.077	59.137	59.290	59.443	59.564	59.597	59.750	59.904	60.057	60.117
8	1	59.079	59.138	59.292	59.445	59.566	59.598	59.752	59.905	60.058	60.118
	2	59.108	59.167	59.321	59.474	59.595	59.627	59.781	59.934	60.087	60.147
	3	59.137	59.197	59.350	59.503	59.624	59.657	59.810	59.963	60.117	60.176
	4	59.166	59.226	59.379	59.532	59.653	59.686	59.839	59.993	60.146	60.205
	5	59.195	59.255	59.408	59.562	59.683	59.715	59.868	60.022	60.175	60.235
9	1	59.197	59.256	59.410	59.563	59.684	59.716	59.870	60.023	60.176	60.236
	2	59.226	59.286	59.439	59.592	59.713	59.746	59.899	60.052	60.206	60.265
	3	59.255	59.315	59.468	59.621	59.742	59.775	59.928	60.082	60.235	60.294
	4	59.284	59.344	59.497	59.651	59.772	59.804	59.957	60.111	60.264	60.324
	5	59.314	59.373	59.527	59.680	59.801	59.833	59.987	60.140	60.293	60.353
10	1	59.315	59.375	59.528	59.681	59.802	59.835	59.988	60.141	60.295	60.354
	2	59.344	59.404	59.557	59.710	59.831	59.864	60.017	60.171	60.324	60.383
	3	59.373	59.433	59.586	59.740	59.861	59.893	60.046	60.200	60.353	60.413
	4	59.403	59.462	59.616	59.769	59.890	59.922	60.076	60.229	60.382	60.442
	5	59.432	59.491	59.645	59.798	59.919	59.951	60.105	60.258	60.411	60.471
11	1	59.433	59.493	59.646	59.799	59.920	59.953	60.106	60.260	60.413	60.472
	2	59.462	59.522	59.675	59.829	59.950	59.982	60.135	60.289	60.442	60.502
	3	59.492	59.551	59.705	59.858	59.979	60.011	60.165	60.318	60.471	60.531
	4	59.521	59.580	59.734	59.887	60.008	60.040	60.194	60.347	60.500	60.560
	5	59.550	59.610	59.763	59.916	60.037	60.070	60.223	60.376	60.530	60.589
12	1	59.551	59.611	59.764	59.918	60.039	60.071	60.224	60.378	60.531	60.591
	2	59.581	59.640	59.794	59.947	60.068	60.100	60.254	60.407	60.560	60.620
	3	59.610	59.669	59.823	59.976	60.097	60.129	60.283	60.436	60.589	60.649
	4	59.639	59.699	59.852	60.005	60.126	60.159	60.312	60.465	60.619	60.678
	5	59.668	59.728	59.881	60.034	60.155	60.188	60.341	60.494	60.648	60.707
13	1	59.670	59.729	59.883	60.036	60.157	60.189	60.343	60.496	60.649	60.709
	2	59.699	59.758	59.912	60.065	60.186	60.218	60.372	60.525	60.678	60.738
	3	59.728	59.788	59.941	60.094	60.215	60.248	60.401	60.554	60.708	60.767
	4	59.757	59.817	59.970	60.123	60.244	60.277	60.430	60.583	60.737	60.796
	5	59.786	59.846	59.999	60.153	60.274	60.306	60.459	60.613	60.766	60.826
14	1	59.788	59.847	60.001	60.154	60.275	60.307	60.461	60.614	60.767	60.827
	2	59.817	59.877	60.030	60.183	60.304	60.337	60.490	60.643	60.797	60.856
	3	59.846	59.906	60.059	60.212	60.333	60.366	60.519	60.672	60.826	60.885
	4	59.875	59.935	60.088	60.242	60.363	60.395	60.548	60.702	60.855	60.915
	5	59.904	59.964	60.117	60.271	60.392	60.424	60.578	60.731	60.884	60.944
15	1	59.906	59.966	60.119	60.272	60.393	60.426	60.579	60.732	60.886	60.945
	2	59.935	59.995	60.148	60.301	60.422	60.455	60.608	60.761	60.915	60.974
	3	59.964	60.024	60.177	60.331	60.452	60.484	60.637	60.791	60.944	61.004
	4	59.993	60.053	60.206	60.360	60.481	60.513	60.667	60.820	60.973	61.033
	5	60.023	60.082	60.236	60.389	60.510	60.542	60.696	60.849	61.002	61.062
16	1	60.024	60.084	60.237	60.390	60.511	60.544	60.697	60.850	61.004	61.063
	2	60.053	60.113	60.266	60.420	60.541	60.573	60.726	60.880	61.033	61.093
	3	60.082	60.142	60.295	60.449	60.570	60.602	60.756	60.909	61.062	61.122
	4	60.112	60.171	60.325	60.478	60.599	60.631	60.785	60.938	61.091	61.151
	5	60.141	60.201	60.354	60.507	60.628	60.661	60.814	60.967	61.121	61.180

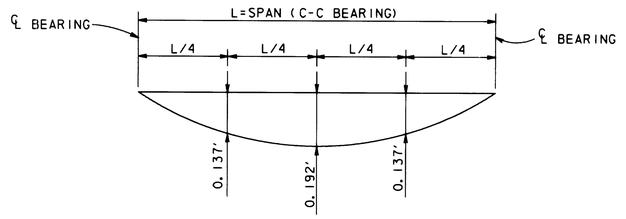

NOTE:
DEFLECTIONS DUE TO
CAST IN PLACE CONCRETE
ONLY. E (BEAM) = 5.30×10^6 P.S.I.

DEAD LOAD DEFLECTION DIAGRAM

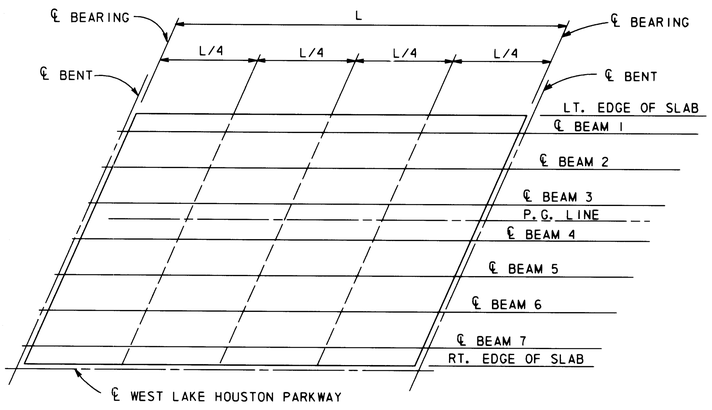

SLAB ELEVATION DIAGRAM

CITY OF HOUSTON

APPROVALS

WATER DESIGN — STREET, BRIDGE & R.O.W.

WATER QUALITY — STORM SEWERS DESIGN

CONSTRUCTION — WASTEWATER DESIGN

TRAFFIC & TRANSPORTATION — PLANNING & DEVELOPMENT DEPT.

ASST. DIRECTOR OF CAPITAL PROJECTS — DIRECTOR OF CAPITAL PROJECTS

NO.	DATE	REVISION	APPROV.
4			
3			
2			
1			

WEST LAKE HOUSTON PARKWAY
WEST FORK SAN JACINTO RIVER BRIDGE

SLAB ELEVATIONS

1 OF 2

STATE OF TEXAS
C. B. MYLIUS
19909
REGISTERED
PROFESSIONAL ENGINEER

THE SEAL APPEARING ON THIS DOCUMENT WAS AUTHORIZED BY C. B. MYLIUS, P.E. 19909 ON 2-4, 19 92.

Turner Collie & Braden Inc.
ENGINEERS • PLANNERS

Unit JANAK	Scale:		Date AUGUST, 1991
Designed EDC	Checked AHB		Job No. 62-68012-020 contract
Drawn DDH	Approved		Sheet 32 of 50

WLH, LHP2SEL, DDH, 12-11-91

SLAB ELEVATIONS

SPAN	PT. NO:	LEFT SLAB LINE	BEAM 1	BEAM 2	BEAM 3	P.G. LINE	BEAM 4	BEAM 5	BEAM 6	BEAM 7	RIGHT SLAB LINE
17	1	60.142	60.202	60.355	60.509	60.630	60.662	60.815	60.969	61.122	61.182
	2	60.171	60.231	60.384	60.538	60.659	60.691	60.845	60.998	61.151	61.211
	3	60.201	60.260	60.414	60.567	60.688	60.720	60.874	61.027	61.180	61.240
	4	60.230	60.290	60.443	60.596	60.717	60.750	60.903	61.056	61.210	61.269
	5	60.259	60.319	60.472	60.625	60.746	60.779	60.932	61.085	61.239	61.298
18	1	60.260	60.320	60.473	60.627	60.748	60.780	60.934	61.087	61.240	61.300
	2	60.290	60.349	60.503	60.656	60.777	60.809	60.963	61.116	61.269	61.329
	3	60.319	60.379	60.532	60.685	60.806	60.839	60.992	61.145	61.299	61.358
	4	60.348	60.408	60.561	60.714	60.835	60.868	61.021	61.174	61.328	61.387
	5	60.377	60.437	60.590	60.744	60.865	60.897	61.050	61.204	61.357	61.417
19	1	60.379	60.438	60.592	60.745	60.866	60.898	61.052	61.205	61.358	61.418
	2	60.408	60.468	60.621	60.774	60.895	60.928	61.081	61.234	61.388	61.447
	3	60.437	60.497	60.650	60.803	60.924	60.957	61.110	61.263	61.417	61.476
	4	60.466	60.526	60.679	60.833	60.954	60.986	61.139	61.293	61.446	61.506
	5	60.495	60.555	60.708	60.862	60.983	61.015	61.168	61.322	61.475	61.535
20	1	60.497	60.557	60.710	60.863	60.984	61.017	61.170	61.323	61.477	61.536
	2	60.526	60.586	60.739	60.892	61.013	61.046	61.199	61.352	61.506	61.565
	3	60.555	60.615	60.768	60.922	61.043	61.075	61.228	61.382	61.535	61.595
	4	60.584	60.644	60.797	60.951	61.072	61.104	61.257	61.411	61.564	61.624
	5	60.614	60.673	60.827	60.980	61.101	61.133	61.287	61.440	61.593	61.653
21	1	60.615	60.675	60.828	60.981	61.102	61.135	61.288	61.441	61.595	61.654
	2	60.644	60.704	60.857	61.011	61.132	61.164	61.317	61.471	61.624	61.684
	3	60.673	60.733	60.886	61.040	61.161	61.193	61.346	61.500	61.653	61.713
	4	60.703	60.762	60.916	61.069	61.191	61.224	61.379	61.536	61.693	61.755
	5	60.756	60.819	60.980	61.142	61.271	61.305	61.469	61.635	61.801	61.866
22	1	60.761	60.823	60.985	61.148	61.277	61.311	61.476	61.641	61.808	61.873
	2	60.888	60.958	61.124	61.295	61.431	61.467	61.640	61.814	61.989	62.057
	3	61.088	61.157	61.336	61.515	61.657	61.695	61.877	62.059	62.243	62.314
	4	61.360	61.432	61.619	61.807	61.956	61.995	62.185	62.376	62.568	62.642
	5	61.699	61.774	61.966	62.157	62.309	62.349	62.541	62.733	62.924	62.999
23	1	61.717	61.792	61.983	62.175	62.326	62.367	62.559	62.750	62.942	63.016
	2	62.085	62.160	62.351	62.543	62.694	62.735	62.926	63.118	63.310	63.384
	3	62.453	62.527	62.719	62.911	63.062	63.102	63.294	63.486	63.678	63.752
	4	62.821	62.895	63.087	63.279	63.430	63.470	63.662	63.854	64.046	64.120
	5	63.189	63.263	63.455	63.647	63.798	63.838	64.030	64.222	64.413	64.488
24	1	63.206	63.281	63.473	63.664	63.815	63.856	64.048	64.239	64.431	64.506
	2	63.574	63.649	63.840	64.032	64.183	64.224	64.416	64.607	64.799	64.874
	3	63.942	64.017	64.208	64.400	64.551	64.592	64.783	64.975	65.167	65.241
	4	64.310	64.384	64.576	64.768	64.919	64.960	65.151	65.343	65.535	65.609
	5	64.678	64.752	64.944	65.136	65.287	65.328	65.519	65.711	65.903	65.977
25	1	64.696	64.770	64.962	65.154	65.305	65.345	65.537	65.729	65.920	65.995
	2	65.059	65.134	65.324	65.514	65.663	65.703	65.892	66.079	66.266	66.339
	3	65.392	65.464	65.648	65.832	65.976	66.015	66.197	66.379	66.560	66.630
	4	65.671	65.741	65.919	66.097	66.237	66.274	66.450	66.626	66.801	66.868
	5	65.898	65.965	66.137	66.309	66.444	66.480	66.650	66.819	66.988	67.054
26	1	65.907	65.974	66.146	66.318	66.452	66.488	66.658	66.827	66.996	67.061
	2	66.078	66.143	66.309	66.474	66.604	66.638	66.802	66.965	67.128	67.191
	3	66.196	66.258	66.418	66.577	66.702	66.735	66.893	67.050	67.206	67.267
	4	66.260	66.320	66.474	66.627	66.747	66.779	66.931	67.082	67.232	67.290
	5	66.272	66.329	66.477	66.624	66.739	66.770	66.916	67.061	67.205	67.261
27	1	66.271	66.328	66.476	66.622	66.738	66.768	66.914	67.058	67.202	67.258
	2	66.227	66.282	66.423	66.564	66.674	66.704	66.843	66.981	67.119	67.173
	3	66.130	66.182	66.318	66.452	66.558	66.586	66.719	66.851	66.983	67.034
	4	65.979	66.030	66.159	66.287	66.388	66.415	66.542	66.668	66.794	66.843
	5	65.776	65.824	65.947	66.069	66.165	66.191	66.312	66.432	66.552	66.598
28	1	65.765	65.813	65.935	66.057	66.153	66.179	66.299	66.419	66.539	66.585
	2	65.506	65.551	65.668	65.784	65.875	65.899	66.014	66.128	66.241	66.285
	3	65.194	65.237	65.347	65.457	65.544	65.566	65.675	65.783	65.892	65.934
	4	64.836	64.878	64.986	65.094	65.180	65.203	65.311	65.419	65.527	65.569
	5	64.471	64.513	64.622	64.730	64.815	64.838	64.947	65.055	65.163	65.205
29	1	64.454	64.496	64.604	64.712	64.798	64.821	64.929	65.037	65.145	65.188
	2	64.089	64.131	64.240	64.348	64.433	64.456	64.565	64.673	64.781	64.823
	3	63.725	63.767	63.876	63.984	64.069	64.092	64.200	64.309	64.417	64.459
	4	63.361	63.403	63.511	63.620	63.705	63.728	63.836	63.944	64.053	64.095
	5	62.997	63.039	63.147	63.255	63.341	63.364	63.472	63.580	63.688	63.730
30	1	62.979	63.021	63.129	63.238	63.323	63.346	63.454	63.562	63.671	63.713
	2	62.615	62.657	62.765	62.873	62.959	62.982	63.090	63.198	63.306	63.349
	3	62.251	62.293	62.401	62.509	62.595	62.617	62.726	62.834	62.942	62.984
	4	61.886	61.928	62.037	62.145	62.230	62.253	62.361	62.470	62.578	62.620
	5	61.522	61.564	61.672	61.781	61.866	61.889	61.997	62.105	62.214	62.256
31	1	61.504	61.546	61.655	61.763	61.848	61.871	61.979	62.088	62.196	62.238
	2	61.140	61.182	61.290	61.399	61.484	61.507	61.615	61.724	61.832	61.874
	3	60.776	60.818	60.926	61.034	61.120	61.143	61.251	61.359	61.467	61.510
	4	60.412	60.454	60.562	60.670	60.756	60.779	60.887	60.995	61.103	61.145
	5	60.047	60.089	60.198	60.306	60.391	60.414	60.523	60.631	60.739	60.781
32	1	60.030	60.072	60.180	60.288	60.374	60.397	60.505	60.613	60.721	60.764
	2	59.666	59.708	59.816	59.924	60.010	60.032	60.141	60.249	60.357	60.399
	3	59.302	59.344	59.452	59.560	59.646	59.668	59.777	59.885	59.993	60.035
	4	58.938	58.980	59.088	59.196	59.282	59.305	59.413	59.521	59.629	59.671
	5	58.573	58.616	58.724	58.832	58.918	58.940	59.049	59.157	59.265	59.307

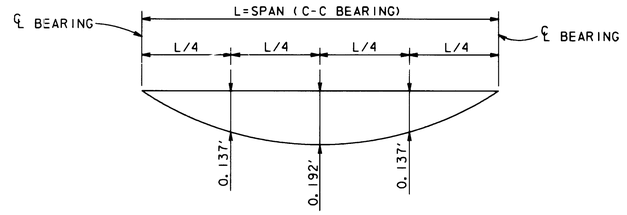

NOTE:
DEFLECTIONS DUE TO CAST IN PLACE CONCRETE ONLY. E (BEAM) = 5.30×10^6 P.S.I.

DEAD LOAD DEFLECTION DIAGRAM

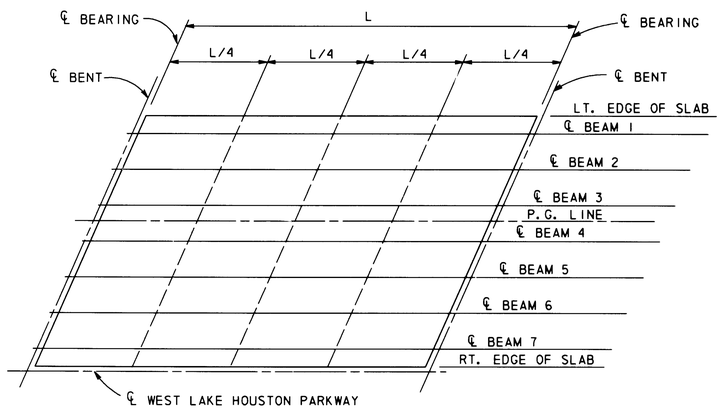

SLAB ELEVATION DIAGRAM

CITY OF HOUSTON

APPROVALS

WATER DESIGN — STREET, BRIDGE & R.O.W.

WATER QUALITY — STORM SEWERS DESIGN

CONSTRUCTION — WASTEWATER DESIGN

TRAFFIC & TRANSPORTATION — PLANNING & DEVELOPMENT DEPT.

ASST. DIRECTOR OF CAPITAL PROJECTS — DIRECTOR OF CAPITAL PROJECTS

NO.	DATE	REVISION	APPROV.
4			
3			
2			
1			

WEST LAKE HOUSTON PARKWAY
WEST FORK SAN JACINTO RIVER BRIDGE

SLAB ELEVATIONS

2 OF 2

STATE OF TEXAS — C. B. MILLIUS — 19909 — REGISTERED PROFESSIONAL ENGINEER

THE SEAL APPEARING ON THIS DOCUMENT WAS AUTHORIZED BY C. B. MILLIUS, P.E. 19909 ON 2-1, 1992.

Turner Collie & Braden Inc.
ENGINEERS • PLANNERS

Unit JANAK	Scales	Date	AUGUST, 1991
Designed EDC	Checked AHB	Job No. 62-68012-020	Contract
Drawn DDH	Approved	Sheet 33	of 50

WLH, LHP2SEL, DDH, 12-11-91

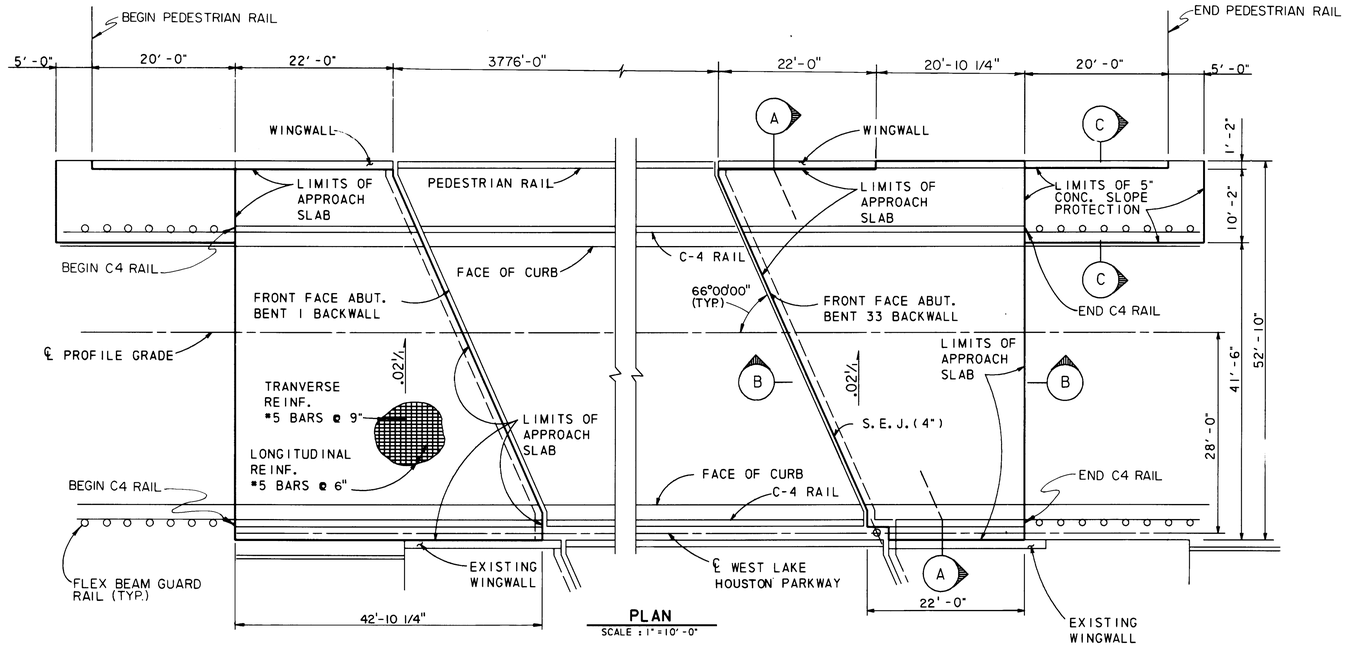

PLAN
SCALE : 1" = 10'-0"

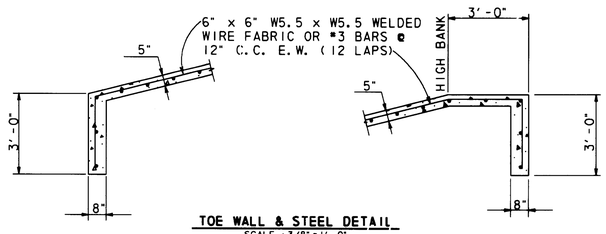

TOE WALL & STEEL DETAIL
SCALE : 3/8" = 1'-0"

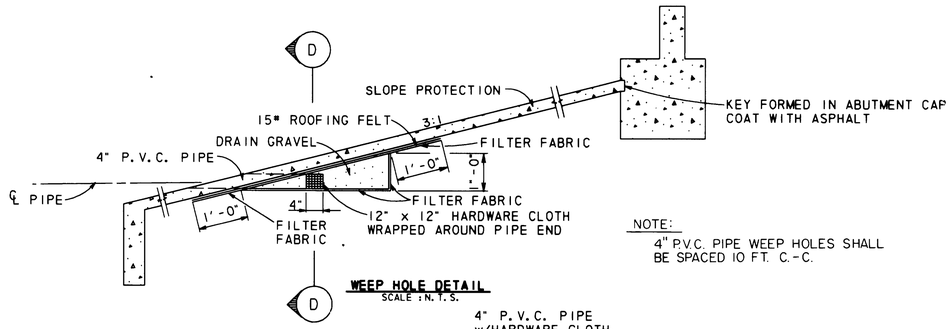

WEEP HOLE DETAIL
SCALE : N. T. S.

NOTE:
4" P.V.C. PIPE WEEP HOLES SHALL BE SPACED 10 FT. C.-C.

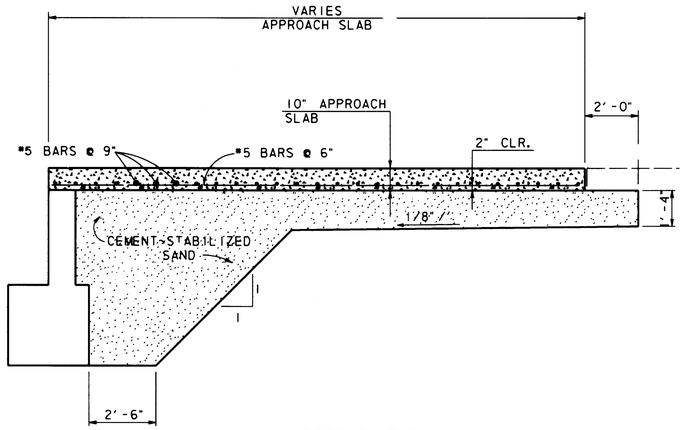

SECTION B-B
SCALE : 3/8" = 1'-0"

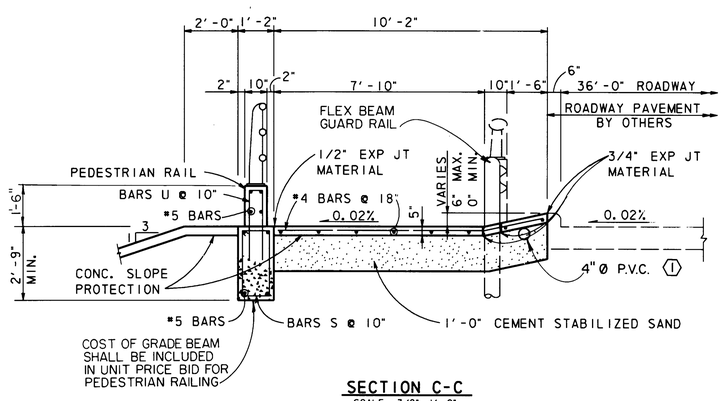

SECTION C-C
SCALE : 3/8" = 1'-0"

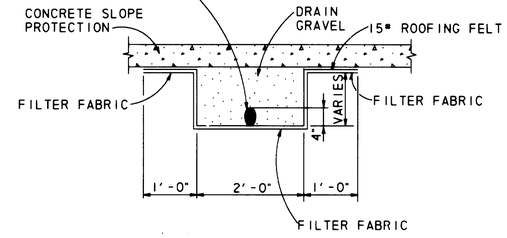

SECTION D-D
SCALE : 3/4" = 1'-0"

NOTE:
FOR WINGWALL DETAILS SEE SHEET 20.

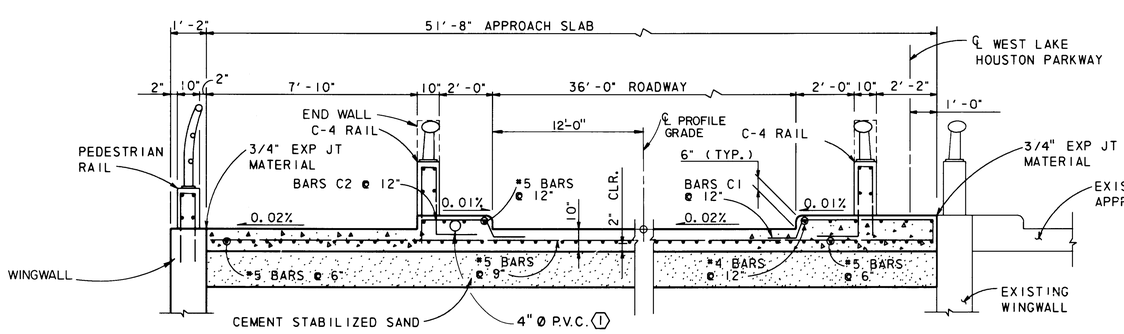

SECTION A-A
SCALE : 3/8" = 1'-0"

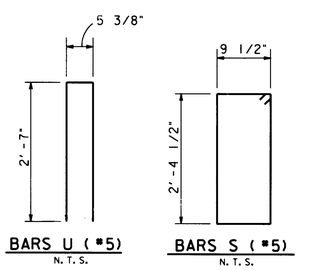

DRAIN GRAVEL	
SIEVE SIZE	% FINER
3/4"	100
3/8"	55-100
NO. 4	15-100
NO. 8	0-50
NO. 16	0-15
NO. 20	0-5"
NO. 200	0-5"

HARDWARE CLOTH	
MAX. WIDTH OF MESH OPENING	1/8"
MIN. WIDTH OF MESH OPENING	1/16"

FILTER FABRIC	
MAX. EQUIVALENT OPENING SIEVE	NO. 70 SIEVE
MAX. EQUIVALENT OPENING SIEVE	NO. 100 SIEVE

P.V.C. PIPE SHALL BE SCHEDULE 40.

NOTE:
DRAIN GRAVEL, P.V.C. PIPE, FILTER FABRIC HARDWARE CLOTH, AND ROOFING FELT SHALL BE CONSIDERED INCIDENTAL TO THE COST OF OTHERS ITEMS OF WORK.

THE SEAL APPEARING ON THIS DOCUMENT WAS AUTHORIZED BY C. B. MYLIUS, P.E. 19909 ON 2-4-92.

CITY OF HOUSTON

APPROVALS

WATER DESIGN — 5/9/92
STREET, BRIDGE & R.O.W. — 5/12/92
WATER QUALITY — 6/1/92
STORM SEWERS DESIGN — 5/14/92
CONSTRUCTION — 5/27/92
WASTEWATER DESIGN — 5/19/92
TRAFFIC & TRANSPORTATION
PLANNING & DEVELOPMENT DEPT.

ASST. DIRECTOR OF CAPITAL PROJECTS — 6-1-92 — DIRECTOR OF CAPITAL PROJECTS

NO.	DATE	REVISION	APPROV.
4			
3			
2			
1	6-17-92	ADDED 4"Ø P.V.C. CONDUIT	CBM

WEST LAKE HOUSTON PARKWAY
WEST FORK SAN JACINTO RIVER BRIDGE

APPROACH SLAB & CONCRETE SLOPE PROTECTION DETAILS

1 OF 1

Turner Collie & Braden Inc.
ENGINEERS • PLANNERS

Unit JANAK	Scales AS SHOWN	Date AUGUST, 1991	
Designed EDC	Checked AHB	Job No. 62-68012-020 Contract	
Drawn DDH	Approved	Sheet 34 of 50	

WLH, LHP2APP, DDH, 12-11-91

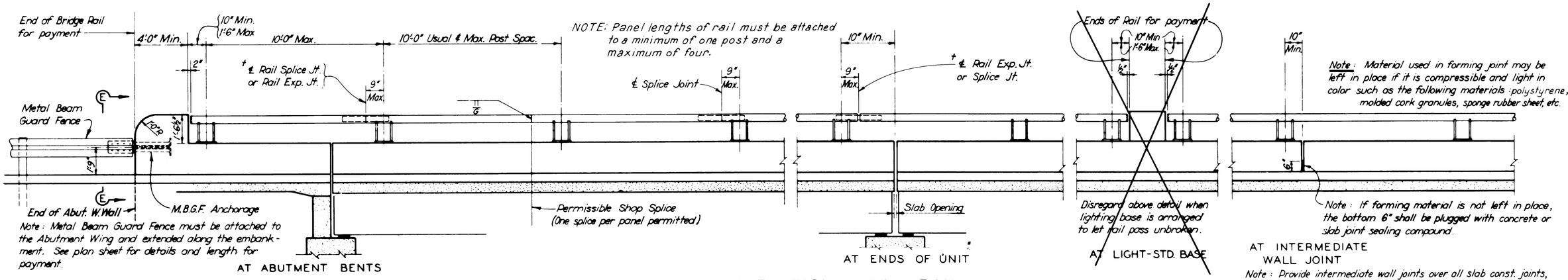

Note: Metal Beam Guard Fence must be attached to the Abutment Wing and extended along the embankment. See plan sheet for details and length for payment.

AT ABUTMENT BENTS

AT ENDS OF UNIT

AT LIGHT-STD. BASE

AT INTERMEDIATE WALL JOINT

Note: Provide intermediate wall joints over all slab const. joints, over interior supports on continuous units, and at equal intervals in between as necessary to maintain a 33'-0" max. length of unbroken wall.

ROADWAY ELEVATION OF RAIL

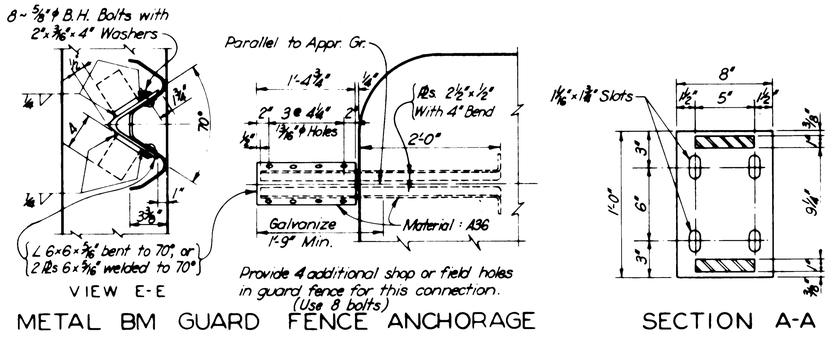

METAL BM GUARD FENCE ANCHORAGE

SECTION A-A

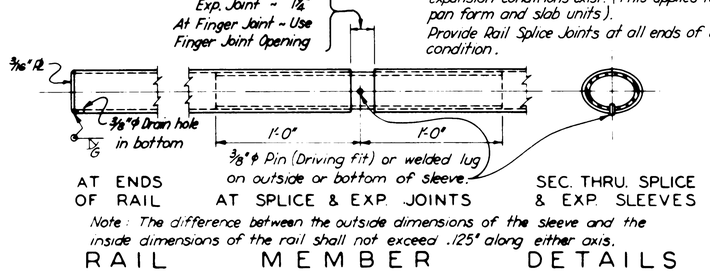

† Note: Provide Rail Expansion Joints at ends of units where expansion conditions exist. (This applies to all structures including pan form and slab units). Provide Rail Splice Joints at all ends of units having (Fix-Fix) condition.

MIN. WALL THICKNESS FOR SLEEVES		
Rail Member → / Splice Matl. ↓	○ A53	○ 5LX52
ASTM-A53-B	.353"	.339"
" A36 or A500 Gr.B	.339"	.325"
" A441	.239"	.231"
API-5LX52	.224"	.216"

Note: Other sections of equal or greater strength are acceptable.

Note: The difference between the outside dimensions of the sleeve and the inside dimensions of the rail shall not exceed .125" along either axis.

RAIL MEMBER DETAILS

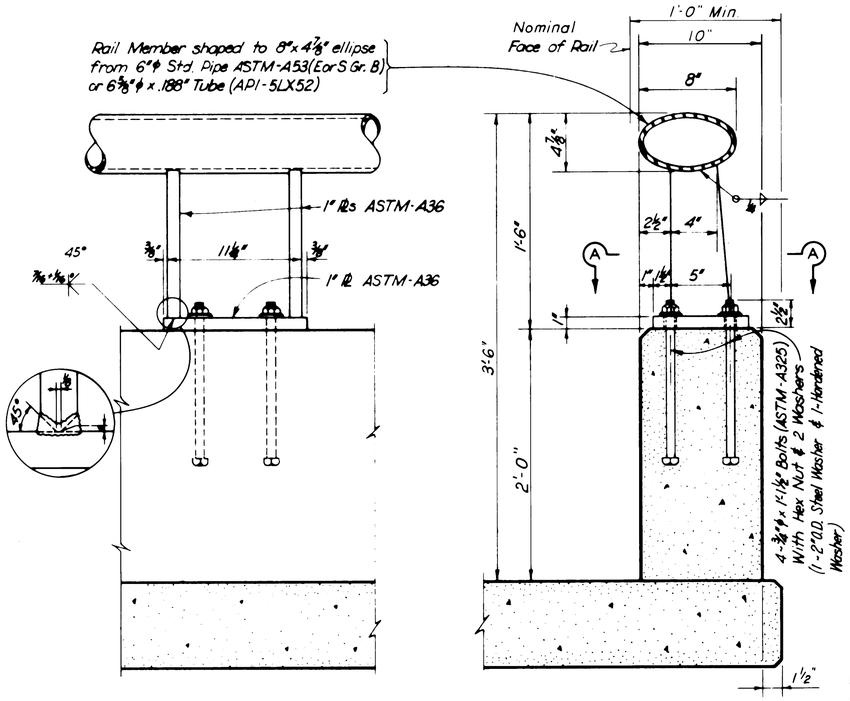

RDWY. ELEV. OF RAIL

SEC. THRU. RAIL

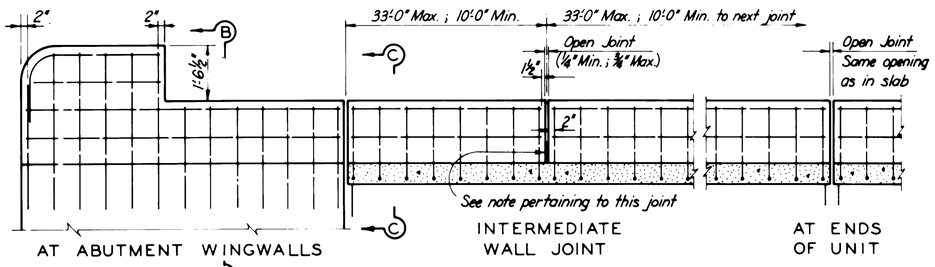

PARAPET WALL DETAILS

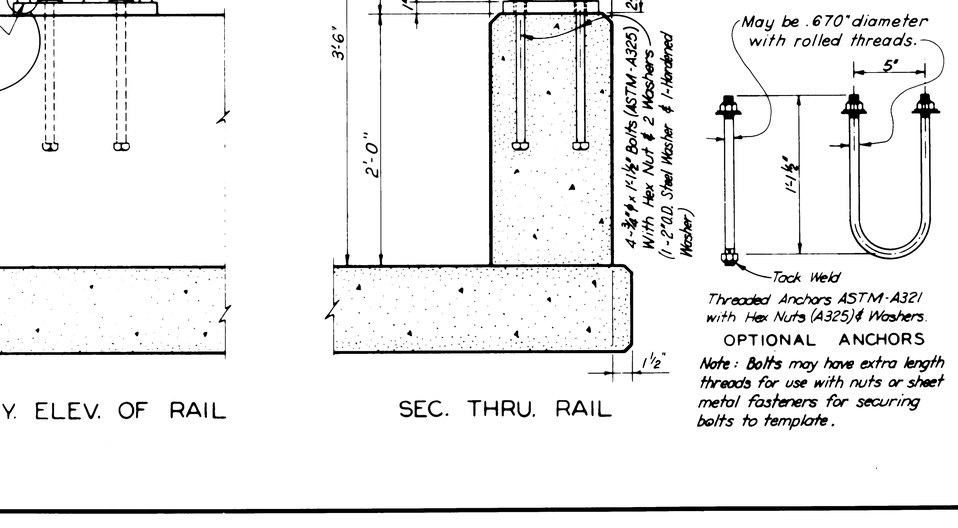

Note: Walls shall be constructed with vertical faces and level across the top unless otherwise shown in plans.

See Span Sheets for details & dimensions of sidewalk.

APPROX. P.L.F. QUANTITIES #		
CONCRETE	C.Y.	0.055
REINF. STEEL	LB.	9.39

Quantities are for information only. Cost of furnishing and installing these materials for parapet wall to be included in unit price bid for Rail, Type C4.

REPRODUCED FROM STATE DEPARTMENT OF HIGHWAYS AND PUBLIC TRANSPORTATION COMBINATION RAIL TYPE C4 (STEEL) OCT., 1978

GENERAL NOTES:
Designed according to AASHTO 1977 Standard and current Interim Specifications.
All open ends of rail shall be capped.
Rail posts shall be set perpendicular to top of parapet wall.
Anchor bolts, nuts and washers shall be galvanized after fabrication.
Nuts and washers for Anchor Bolts shall conform to A325 requirements. Nuts may be tapped or chased after galvanizing. Bolts and nuts shall have Class 2A and 2B fit tolerances.

Unit bid price for Rail Type C4 includes:
Concrete Parapet Wall and Wing Terminal Wall, Metal Railing, Posts, Connectors, Anchor Bolts and M.B.G.F. Anchorage.
Concrete for parapet wall shall be Class B1. Chamfer all exposed corners 3/4" unless otherwise shown.

NO.	DATE	REVISION	APPROV.
4			
3			
2			
1			

WEST LAKE HOUSTON PARKWAY
WEST FORK SAN JACINTO RIVER BRIDGE

TYPE C4 RAIL DETAILS

Turner Collie & Braden Inc.
ENGINEERS • PLANNERS

STATE OF TEXAS · C. B. MYLIUS · 19909 · REGISTERED PROFESSIONAL ENGINEER
4-2-92

Unit JANAK	Scales N.T.S.	Date DECEMBER, 1991	
Designed THD	Checked	Job No. 62-68012-020 contract	
Drawn THD	Approved	Sheet 35	of 50

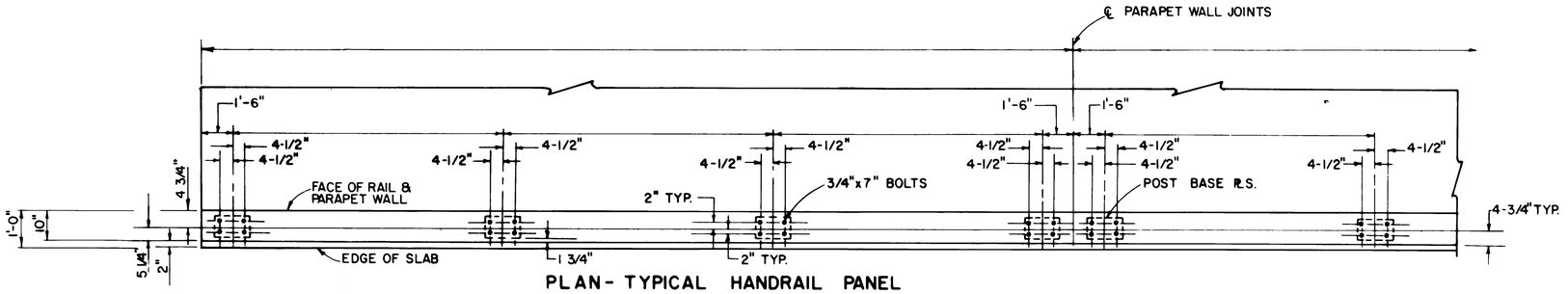

PLAN- TYPICAL HANDRAIL PANEL
NO SCALE

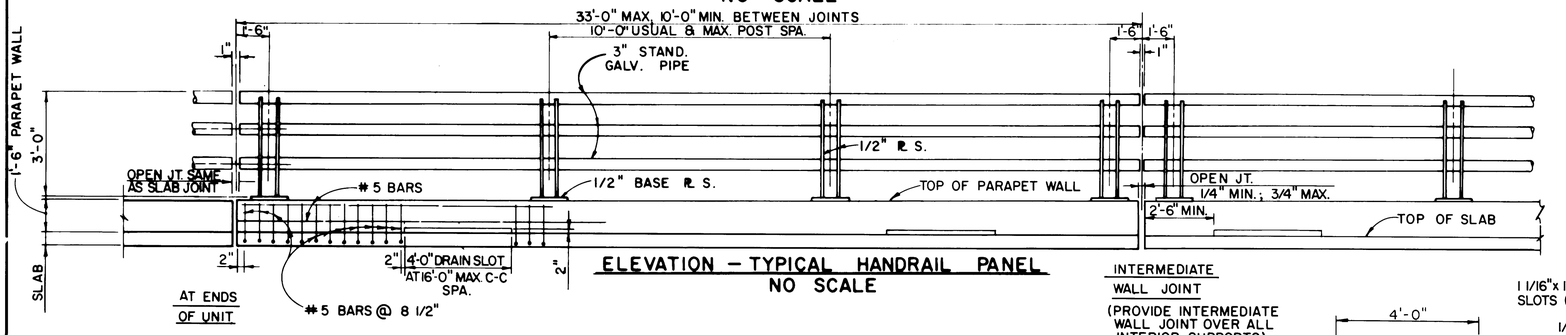

ELEVATION - TYPICAL HANDRAIL PANEL
NO SCALE

INTERMEDIATE WALL JOINT

(PROVIDE INTERMEDIATE WALL JOINT OVER ALL INTERIOR SUPPORTS)

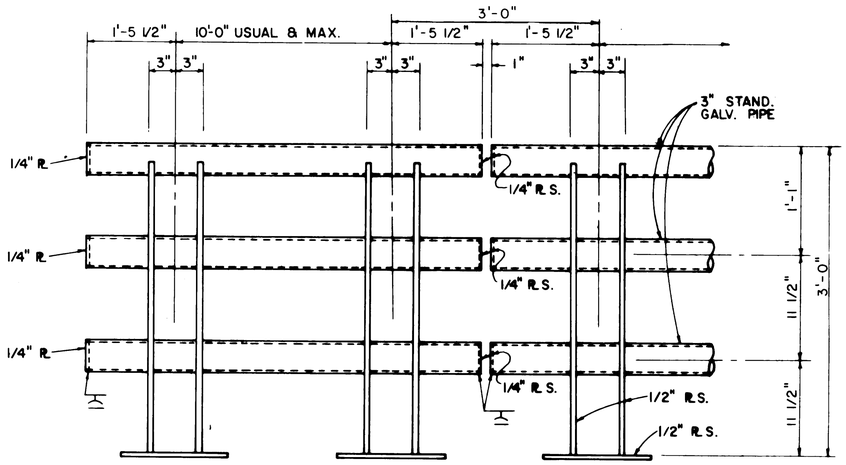

ELEVATION - RAILING END DETAILS
NO SCALE

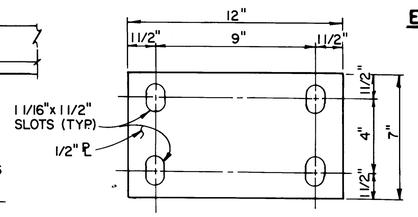

BASE PLATE DETAIL
NO SCALE

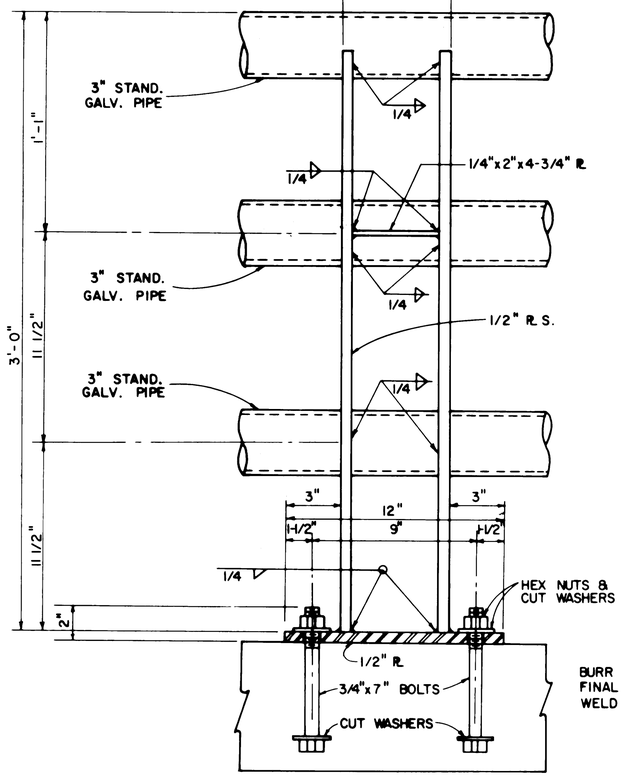

ELEVATION AT POST
3" = 1'-0"

BURR THREADS AFTER FINAL ADJUSTMENT TACK WELD NUTS & WASHERS

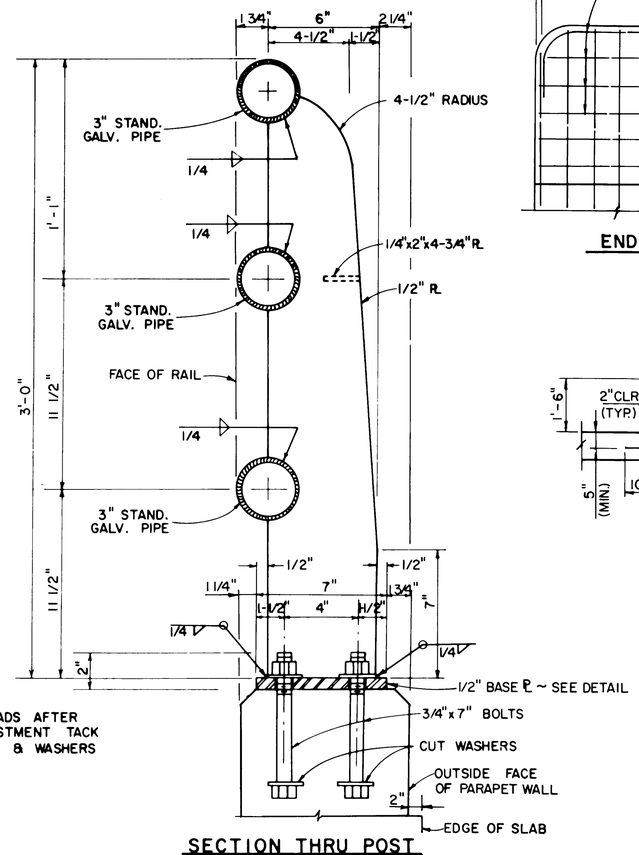

SECTION THRU POST
3" = 1'-0"

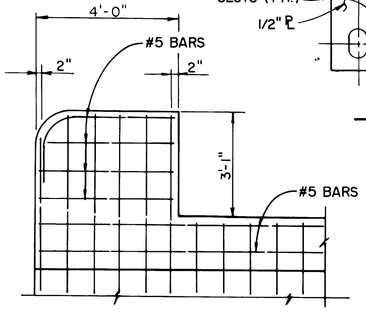

END RAIL DETAIL

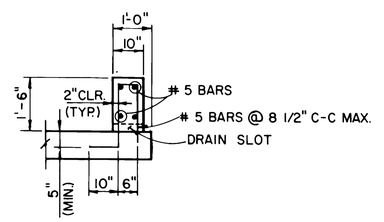

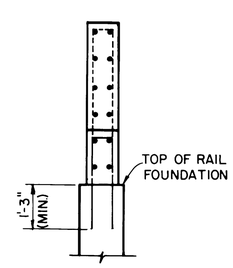

PARAPET WALL DETAILS

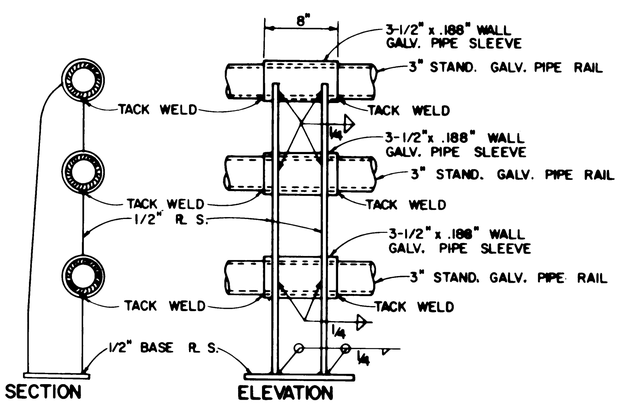

ALTERNATE POST DETAILS
1-1/2" = 1'-0"

NOTES:

1. ALL PIPE, PLATES, SHIMS, BOLTS, NUTS AND WASHERS SHALL BE GALVANIZED.
2. CONCRETE FOR PARAPET WALL SHALL BE CLASS BI. CHAMFER ALL EXPOSED CORNERS 3/4" UNLESS OTHERWISE SHOWN.
3. REINFORCING STEEL FOR PARAPET WALL SHALL BE ASTM A615, GRADE 60.

NO	DATE	REVISION	APPROV
2			
1			

WEST LAKE HOUSTON PARKWAY
WEST FORK SAN JACINTO RIVER BRIDGE

PEDESTRIAN RAILING DETAILS

Turner Collie & Braden Inc.
CONSULTING ENGINEERS
TEXAS REGISTERED ENGINEERING PRACTICE ACT NO. F-1046
COLORADO REGISTERED ENGINEERING CORP. NO. 1046

STATE OF TEXAS · C. B. MYLIUS · 19909 · REGISTERED PROFESSIONAL ENGINEER

Unit JANAK	Scale Horz. NONE / Vert.	Date DECEMBER, 1991	
Designed EDC	Checked	Job No. 62-68012-020	Contract
Drawn RGD	Approved	Sheet 36	of 50

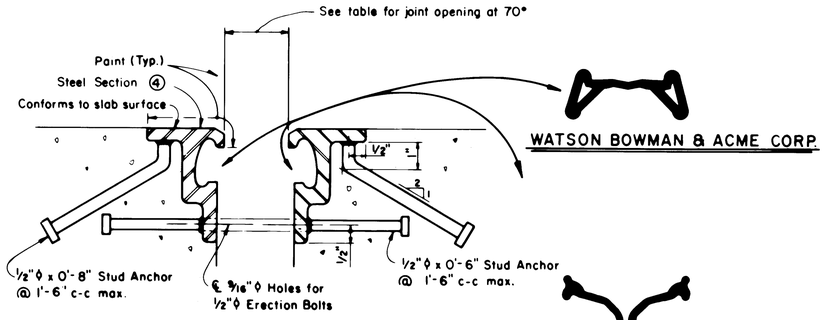

SECTION THRU
WATSON BOWMAN & ACME CORP.
STRUCTURAL ACCESSORIES INC.
D S BROWN COMPANY
BRG INDUSTRIES INC.

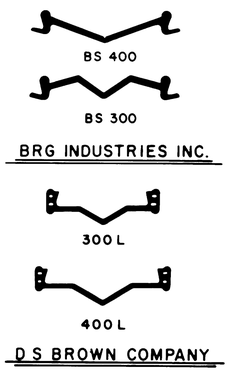

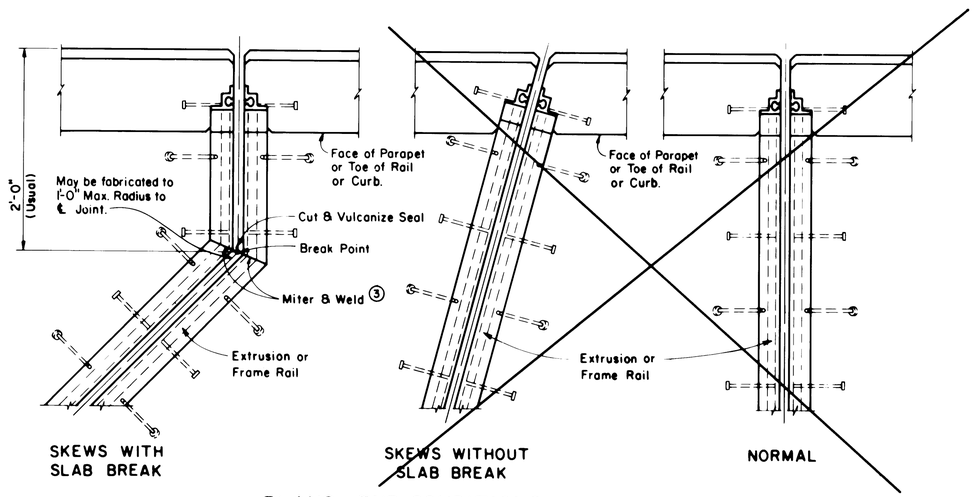

PLANS—END CONDITIONS

MANUFACTURER	STEEL SECTION ④	NEOPRENE STRIP SEAL			
		3" JOINT		4" JOINT	
		Seal Type	Joint Opening	Seal Type	Joint Opening
Watson Bowman & Acme Corp.	Type M Extrusion	S 300	1.75	S 400	1.75
Structural Accessories Inc.	Type SCII Extrusion	40 SS	1.75	50 SS	1.75
D S Brown	Frame Rail SSCM	300 L	1.75	400 L	1.75
BRG Industries Inc.	Type W *	BS 300	1.75	BS 400	1.75

④ Shape of extrusion shown is typical Variations depending on manufacturer are permissible.

* Type W to be 2.75 inch by 3.25 inch and 3/8 inch minimum thickness.

REPRODUCED FROM
STATE DEPARTMENT OF HIGHWAYS
AND PUBLIC TRANSPORTATION
SEALED EXPANSION JOINT DETAILS
WITHOUT OVERLAY
SEJ-S(I) REV. 10-86

GENERAL NOTES:

Sealed Exp. Jts. shall be provided in the size and at all locations shown on plans.

Shop fabrication will be required at all intersections of cross slope and at break points.

Steel sections shall be shipped in convenient lengths not to exceed 24'-0" and butt welded in the field.

At splices, a continuous ground smooth weld shall be provided except on all surfaces in locking contact with seal which shall have no burrs.

Corresponding sections of Sealed Exp. Jts. shall be temporarily shop assembled, checked for fit, and match marked for shipment.

Erection holes, if required, shall be punched so as to line up when Sealed Exp. Jts. are in their final position. Erection bolts, if used, shall be cut off flush with extrusion promptly after the concrete in the latter of the two placements has taken initial set.

Stud anchors shall be electric arc end-welded with complete fusion.

The neoprene seal shall be continuous and included in the price bid for Sealed Exp. Jt.

The Contractor shall arrange for securing the Sealed Exp. Jt. in position, and placing to the proper grade and alignment by welding braces to adjacent slab steel, to prestressed beam stirrups, or to anchors cast in concrete diaframs. Cost of temporary bracing is to be included in the price bid for Sealed Exp. Jt.

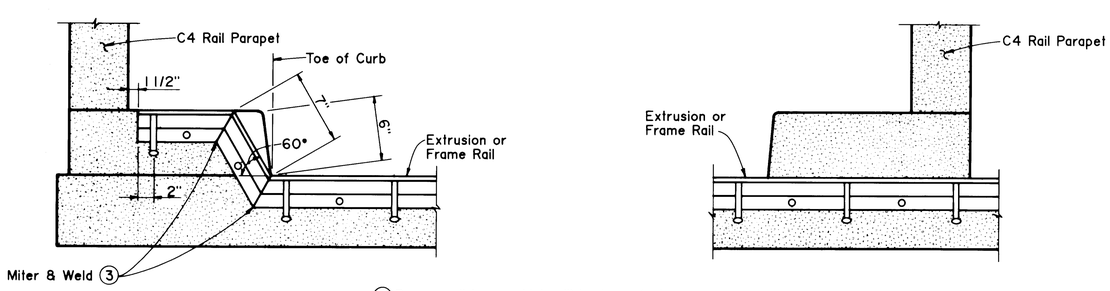

③ Remove all burrs which will be in contact with seal prior to making splice.

(HIGH SIDE)

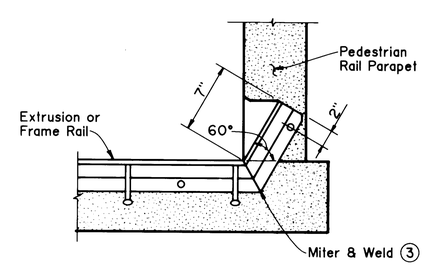

(LOW SIDE)

SECTIONS THRU SLAB

NO.	DATE	REVISION	APPROV.
4			
3			
2			
1			

WEST LAKE HOUSTON PARKWAY
WEST FORK SAN JACINTO RIVER BRIDGE

SEALED EXPANSION JOINT DETAILS

Turner Collie & Braden Inc.
ENGINEERS • PLANNERS

STATE OF TEXAS
C. B. MYLIUS
19909
REGISTERED PROFESSIONAL ENGINEER
C.B. Mylius
2-4-92

Unit	JANAK	Scale	N.T.S.	Date	DECEMBER, 1991
Designed	EDC	Checked		Job No.	62-68012-020 Contract
Drawn	RGD	Approved		Sheet	37 of 50

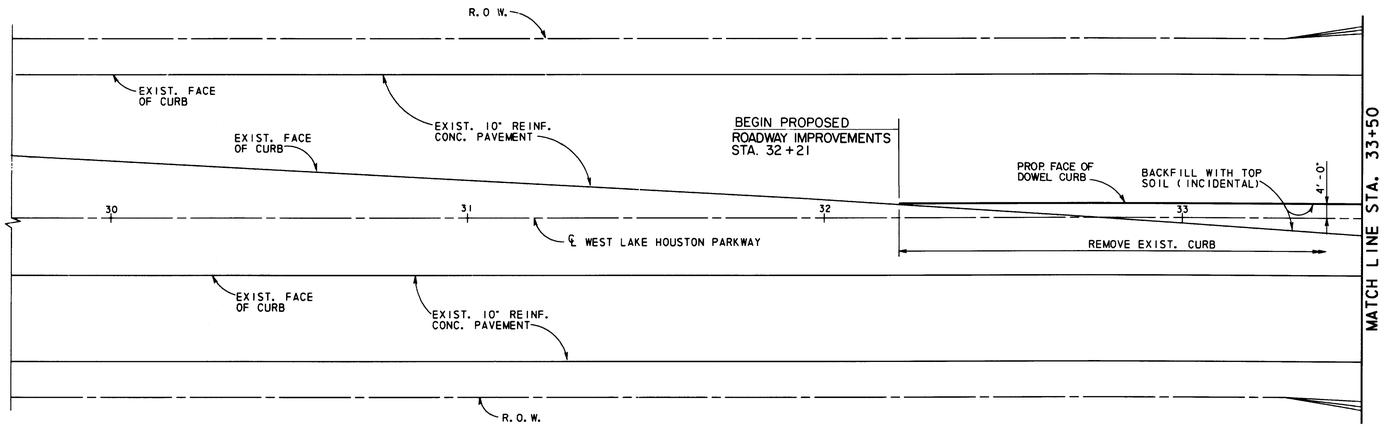

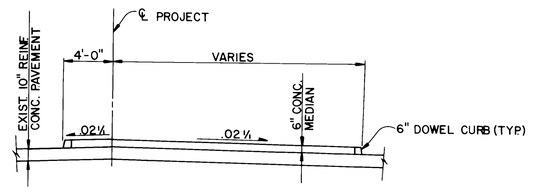

SECTION A-A
SCALE: 1"= 6'-0"

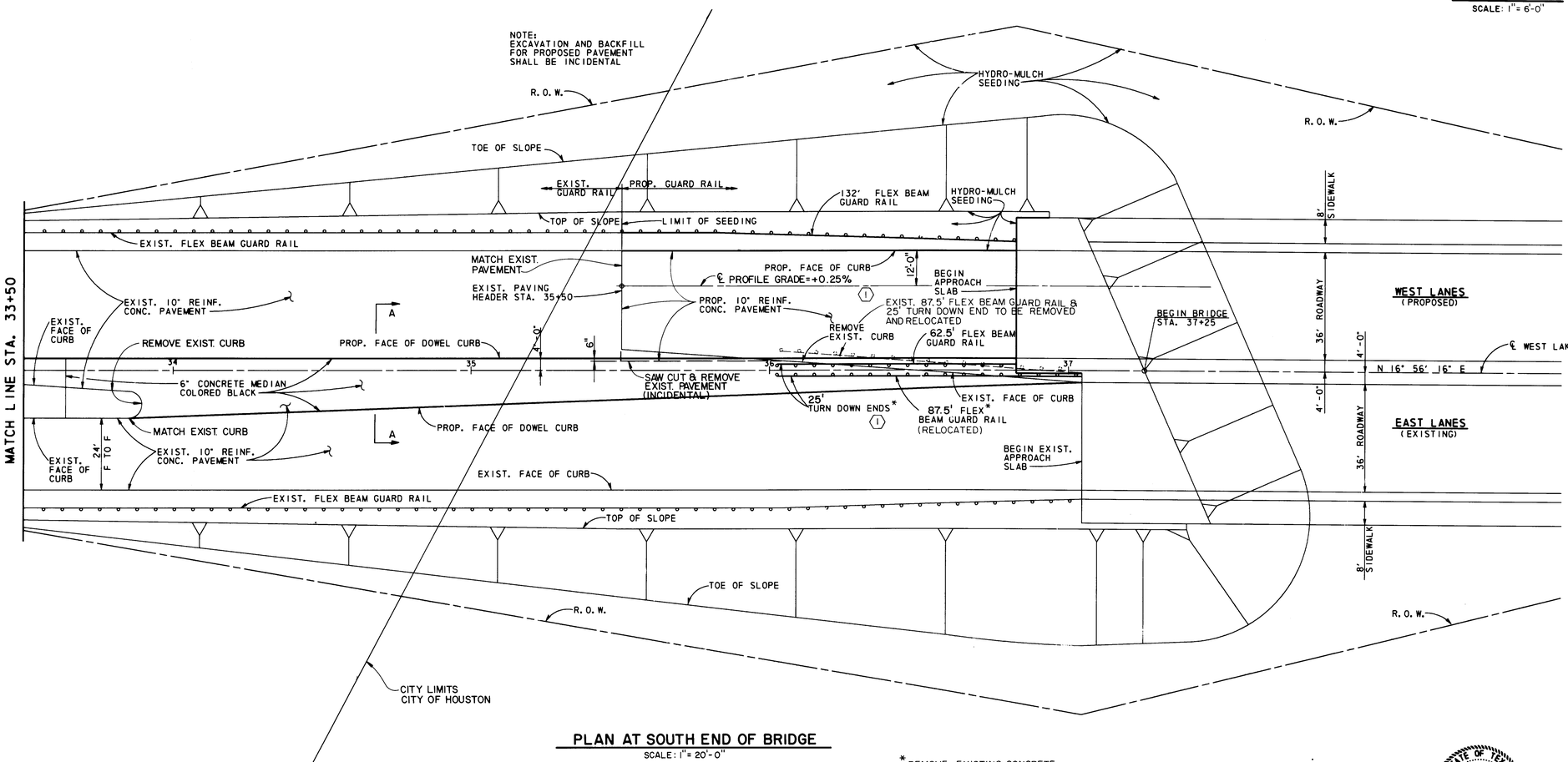

PLAN AT SOUTH END OF BRIDGE
SCALE: 1"= 20'-0"

* REMOVE EXISTING CONCRETE PAVEMENT AS REQUIRED (INCIDENTAL)

STATE OF TEXAS
C. B. MYLIUS
19909
REGISTERED PROFESSIONAL ENGINEER

THE SEAL APPEARING ON THIS DOCUMENT WAS AUTHORIZED BY C. B. MYLIUS, P.E. 19909 ON _____, 19__.

CITY OF HOUSTON

APPROVALS

WATER DESIGN — 5/19/92	STREET, BRIDGE & R.O.W. — 5/13/92
WATER QUALITY — 6/1/92	STORM SEWERS DESIGN — 5-14-92
CONSTRUCTION	WASTEWATER DESIGN — 5/17/92
TRAFFIC & TRANSPORTATION	PLANNING & DEVELOPMENT DEPT.

ASST. DIRECTOR OF CAPITAL PROJECTS — DIRECTOR OF CAPITAL PROJECTS

NO.	DATE	REVISION	APPROV.
4			
3			
2			
1	6-17-92	REVISED FLEX BEAM GUARD RAIL	CBM

WEST LAKE HOUSTON PARKWAY
WEST FORK SAN JACINTO RIVER BRIDGE

APPROACH DETAILS - SOUTH END

Turner Collie & Braden Inc.
ENGINEERS + PLANNERS

Unit JANAK	Scale 1"=20'	Date	OCTOBER, 1991
Designed CBM	Checked CBM	Job No.	62-68012-020 Contract
Drawn HM	Approved	Sheet	38 of 50

WLHPAV.DGN (1) 12-11-91

NOTE:
EXCAVATION AND BACKFILL FOR PROPOSED PAVEMENT SHALL BE INCIDENTAL

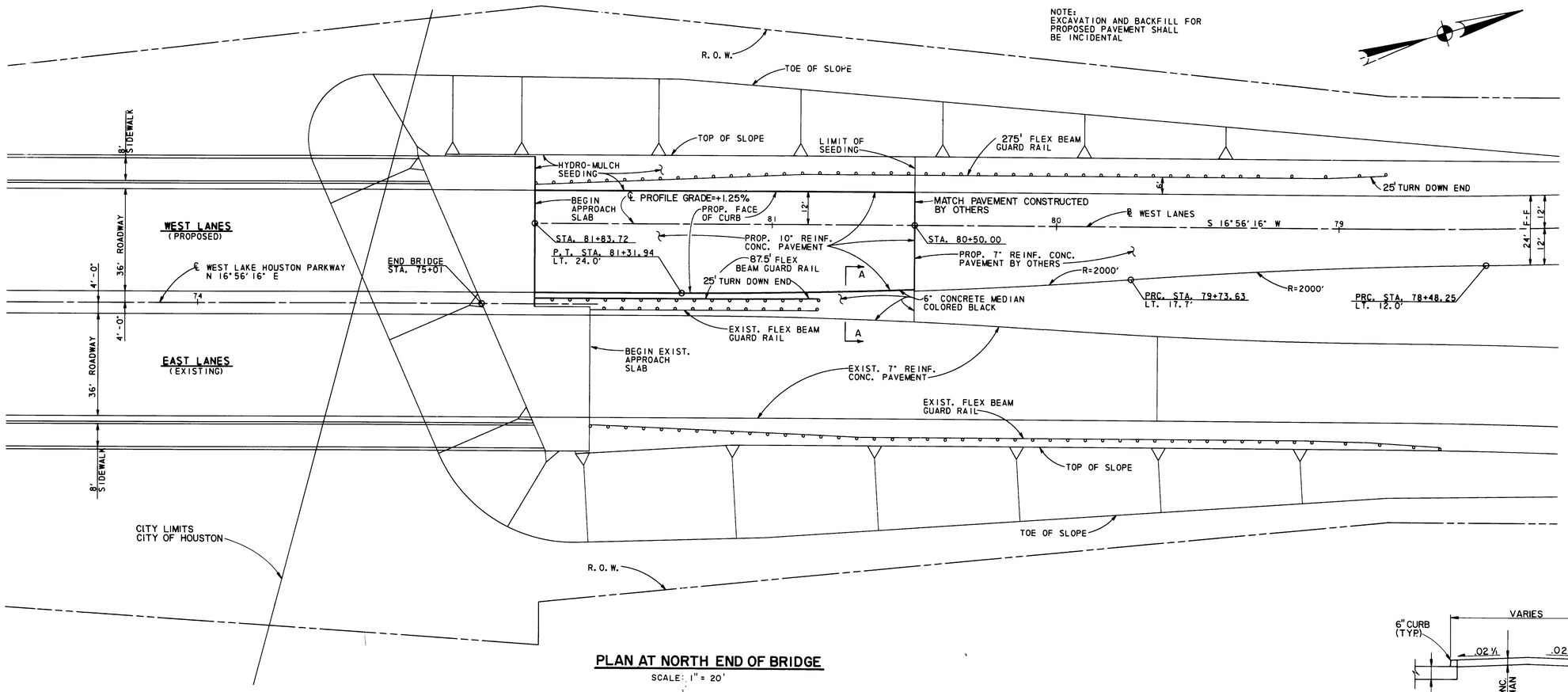

PLAN AT NORTH END OF BRIDGE

SCALE: 1" = 20'

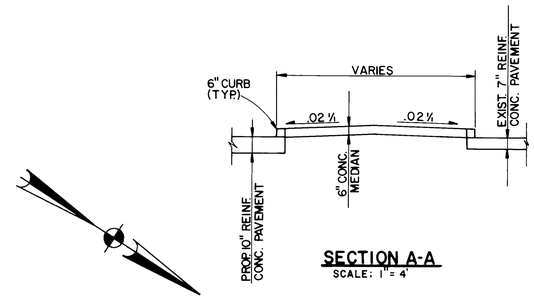

SECTION A-A

SCALE: 1" = 4'

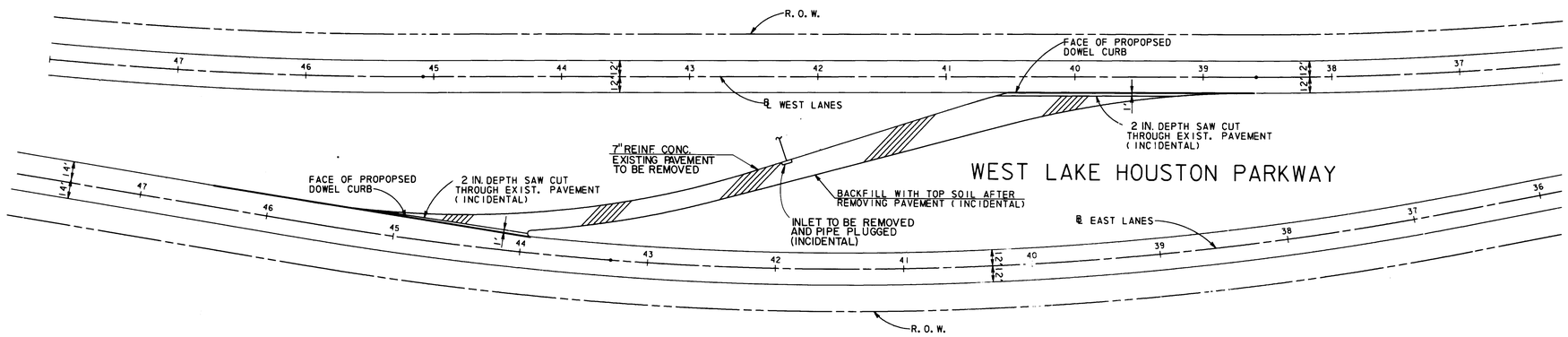

PLAN NORTH OF BRIDGE AT TEMPORARY CROSSOVER

SCALE: 1" = 50'

TO KINGWOOD DR.

CITY OF HOUSTON

APPROVALS

WATER DESIGN	STREET, BRIDGE & R.O.W.
WATER QUALITY	STORM SEWERS DESIGN
CONSTRUCTION	WASTEWATER DESIGN
TRAFFIC & TRANSPORTATION	PLANNING & DEVELOPMENT DEPT.
ASST. DIRECTOR OF CAPITAL PROJECTS	DIRECTOR OF CAPITAL PROJECTS

NO.	DATE	REVISION	APPROV.
4			
3			
2			
1			

WEST LAKE HOUSTON PARKWAY
WEST FORK SAN JACINTO RIVER BRIDGE

APPROACH DETAILS - NORTH END

STATE OF TEXAS
C. B. MYLIUS
19909
REGISTERED PROFESSIONAL ENGINEER

THE SEAL APPEARING ON THIS DOCUMENT WAS AUTHORIZED BY C. B. MYLIUS, P.E. 19909 ON 2-4, 1992.

Turner Collie & Braden Inc.
ENGINEERS • PLANNERS

Unit JANAK	Scale N. T. S.	Date DECEMBER, 1991	
Designed CBM	Checked CBM	Job No. 62-68012-020 Contract	
Drawn HM	Approved	Sheet 39 of 50	

WLHPAVN.DGN (2) 12-11-91

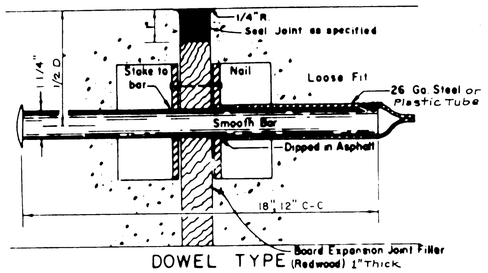

DOWEL TYPE

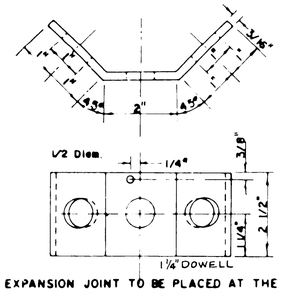

EXPANSION JOINT TO BE PLACED AT THE END OF EACH CURB RADIUS AND SPACED APPROX. 80' APART.

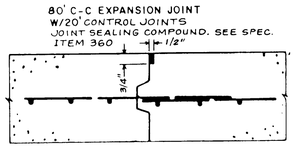

CONSTRUCTION JOINT SEAL

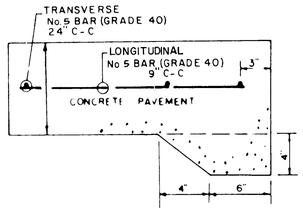

STANDARD PAVING HEADER

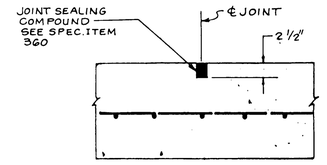

SAW CUT CONTROL JOINT

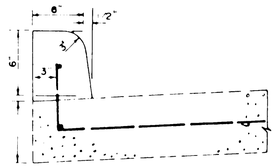

CONCRETE CURB

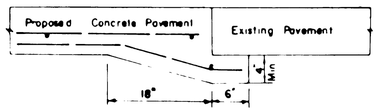

DETAIL SHOWING UNDERCUT

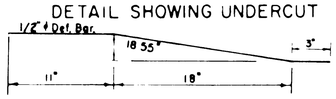

UNDERCUT BAR

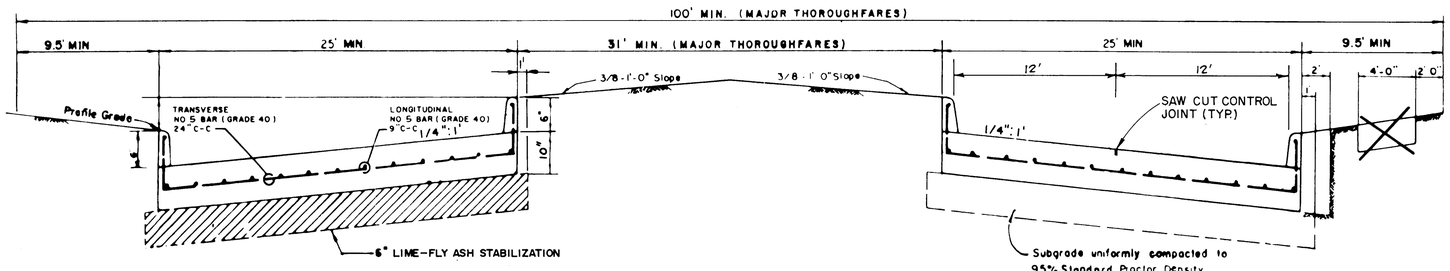

TYPICAL SECTIONS FOR MAJOR THOROUGHFARES AND DOUBLE ROADWAYS

CITY OF HOUSTON

APPROVALS

WATER DESIGN — J.W. Lowry 5/19/92	STREET, BRIDGE & R.O.W. — S. Hilburn 5/14/92
WATER QUALITY — 6/4/92	STORM SEWERS DESIGN — [illegible] 5/12/92
CONSTRUCTION — 5/27/92	WASTEWATER DESIGN
TRAFFIC & TRANSPORTATION	PLANNING & DEVELOPMENT DEPT.

ASST. DIRECTOR OF CAPITAL PROJECTS — DIRECTOR OF CAPITAL PROJECTS — 6-1-92

NO	DATE	REVISION	APPR.
4			
3			
2			
1			

WEST LAKE HOUSTON PARKWAY
WEST FORK SAN JACINTO RIVER BRIDGE

PAVING DETAILS

STATE OF TEXAS — C. B. MYLIUS — 19909 — REGISTERED PROFESSIONAL ENGINEER

C. B. Mylius 6-1-92

Turner Collie & Braden Inc.
CONSULTING ENGINEERS
TEXAS AUSTIN DALLAS EL PASO HOUSTON PORT ARTHUR
COLORADO DENVER GRAND JUNCTION

Unit JANAK	Scale Horz / Vert N.T.S	Date	DECEMBER, 1991
Designed	Checked	Job No	62-68012-020 Contract
Drawn	Approved	Sheet	40 of 50

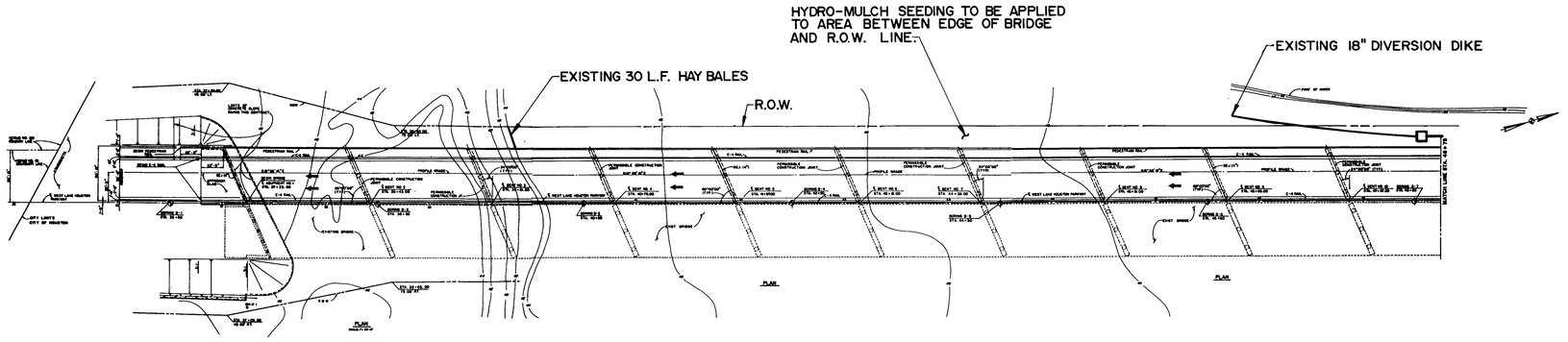

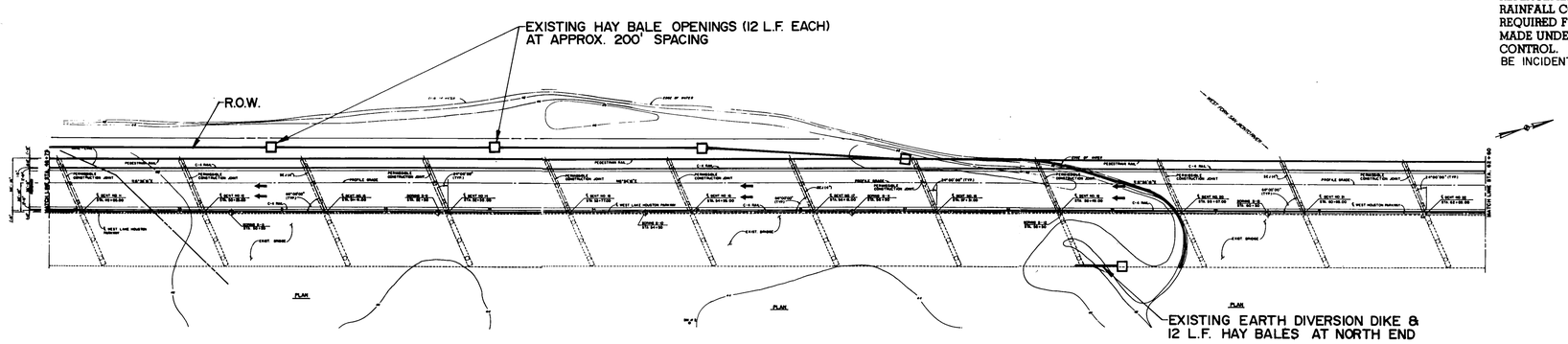

NOTES:

DURING CONSTRUCTION OF THIS PROJECT THE CONTRACTOR SHALL BE RESPONSIBLE FOR MAINTAINING THE INTEGRITY OF THE EXISTING DIVERSION DIKES, AND UPON COMPLETION OF THE PROJECT THE CONTRACTOR SHALL REMOVE THESE DIVERSION DIKES. AREAS OCCUPIED BY THE DIVERSION DIKES SHALL BE REGRADED, AS DIRECTED BY THE ENGINEER, TO CONFORM AS CLOSELY AS PRACTICABLE TO THE PREVIOUS NATURAL STATE. THE WORK DESCRIBED ABOVE SHALL BE CONSIDERED SUBSIDIARY TO SPECIAL ITEM 7, (S.I.7) CONSTRUCTION EROSION AND SEDIMENTATION CONTROL.

UPON COMPLETION OF THE PROJECT AND REGRADING OF THE AREAS DESCRIBED ABOVE, HYDRO-MULCH SEEDING SHALL BE APPLIED TO THE AREAS SHOWN ON THIS SHEET. PAYMENT FOR THIS WORK SHALL BE MADE UNDER ITEM 165, HYDRO-MULCH SEEDING.

THE CONTRACTOR SHALL ALSO BE RESPONSIBLE FOR MAINTAINING THE HAY BALES SEDIMENT FILTERS SHOWN ON THIS SHEET. PERIODIC REPLACEMENT OF THE HAY BALES WILL BE REQUIRED. THE FREQUENCY OF SUCH REPLACEMENT WILL BE DEPENDENT ON RAINFALL AMOUNTS. UNDER NORMAL RAINFALL CONDITIONS IT IS ESTIMATED THAT REPLACEMENT MAY BE REQUIRED FOUR (4) TIMES PER YEAR. PAYMENT FOR THIS WORK WILL BE MADE UNDER S.I.7, CONSTRUCTION EROSION AND SEDIMENTATION CONTROL. REMOVAL OF HAY BALES AT COMPLETION OF PROJECT SHALL BE INCIDENTAL TO S.I. 7.

CITY OF HOUSTON

APPROVALS

WATER DESIGN — 5/19/92	STREET & DRAINAGE DESIGN — 5-16-92
WATER QUALITY — 6/1/92	STORM SEWERS DESIGN — 5/15/92
CONSTRUCTION — 5/27/92	WASTEWATER DESIGN
TRAFFIC & TRANSPORTATION	PLANNING & DEVELOPMENT DEPT.

6-1-92

ASST. DIRECTOR OF CAPITAL PROJECTS — DIRECTOR OF CAPITAL PROJECTS

NO.	DATE	REVISION	APPROV.
4			
3			
2			
1			

WEST LAKE HOUSTON PARKWAY
WEST FORK SAN JACINTO RIVER BRIDGE

EROSION CONTROL MAINTENANCE

STATE OF TEXAS — C. B. MYLIUS — 19909 — REGISTERED PROFESSIONAL ENGINEER

C.B. Mylius
2-2-92

Turner Collie & Braden Inc.
ENGINEERS • PLANNERS

Unit JANAK	Scale N.T.S.	Date OCTOBER, 1991
Designed CBM	Checked CBM	Job No. 62-68012-002 Contract
Drawn HM	Approved	Sheet 41 of 150

311803

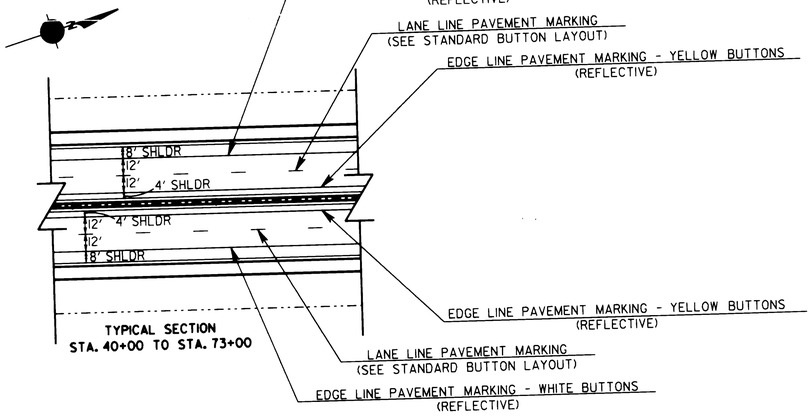

TYPICAL SECTION
STA. 40+00 TO STA. 73+00

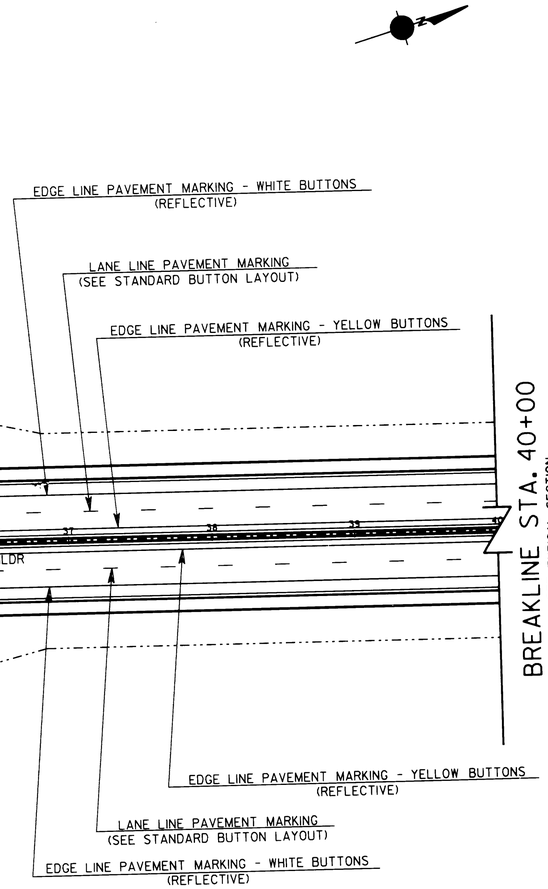

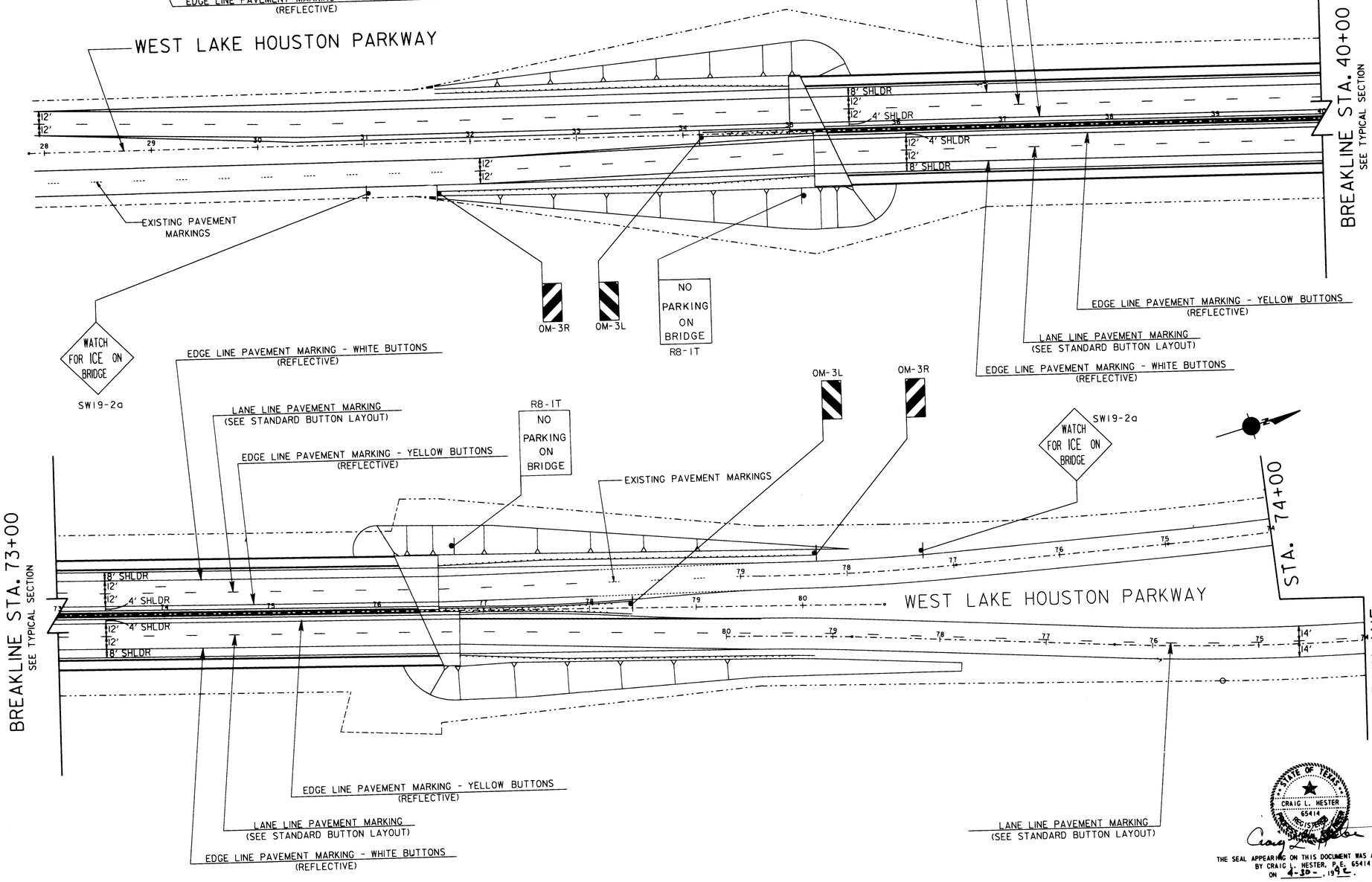

NOTES:
1. FOR BUTTON PLACEMENT, REFER TO CITY OF HOUSTON STANDARD BUTTON LAYOUT.
2. ALL LANE LINE TRAFFIC BUTTONS ARE TO BE 5' C-C.

CITY OF HOUSTON
APPROVALS

WATER DESIGN — 5/19/92	STREET, BRIDGE & R.O.W. — 5/12/92
WATER QUALITY — 6/1/92	STORM SEWERS DESIGN — 5/18/92
CONSTRUCTION — 5/27/92	WASTEWATER DESIGN
TRAFFIC & TRANSPORTATION	PLANNING & DEVELOPMENT DEPT.

ASSIST. DIRECTOR OF CAPITAL PROJECTS — DIRECTOR OF CAPITAL PROJECTS — 6-1-92

NO.	DATE	REVISION	APPROV.
4			
3			
2			
1			

WEST LAKE HOUSTON PARKWAY
WEST FORK SAN JACINTO RIVER BRIDGE

SIGNING AND PAVEMENT MARKING
EXISTING TO STA. 74+00

STATE OF TEXAS
CRAIG L. HESTER
65414
REGISTERED
ENGINEER

THE SEAL APPEARING ON THIS DOCUMENT WAS AUTHORIZED BY CRAIG L. HESTER, P.E. 65414 ON 4-30-, 1992.

Turner Collie & Braden Inc.
ENGINEERS • PLANNERS

Unit	SUTTON	Scale:	1" = 50'	Date	FEBRUARY ,1992
Designed	CLH	Checked	RES	Job No. 62680I2022	Contract
Drawn	JOEF	Approved		Sheet 42	of 50

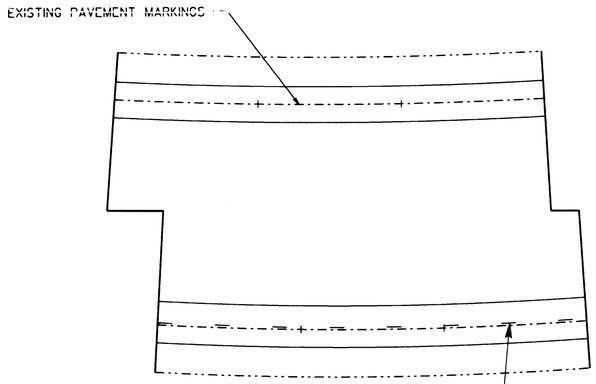

TYPICAL SECTION
STA. 74+00 TO STA. 48+00

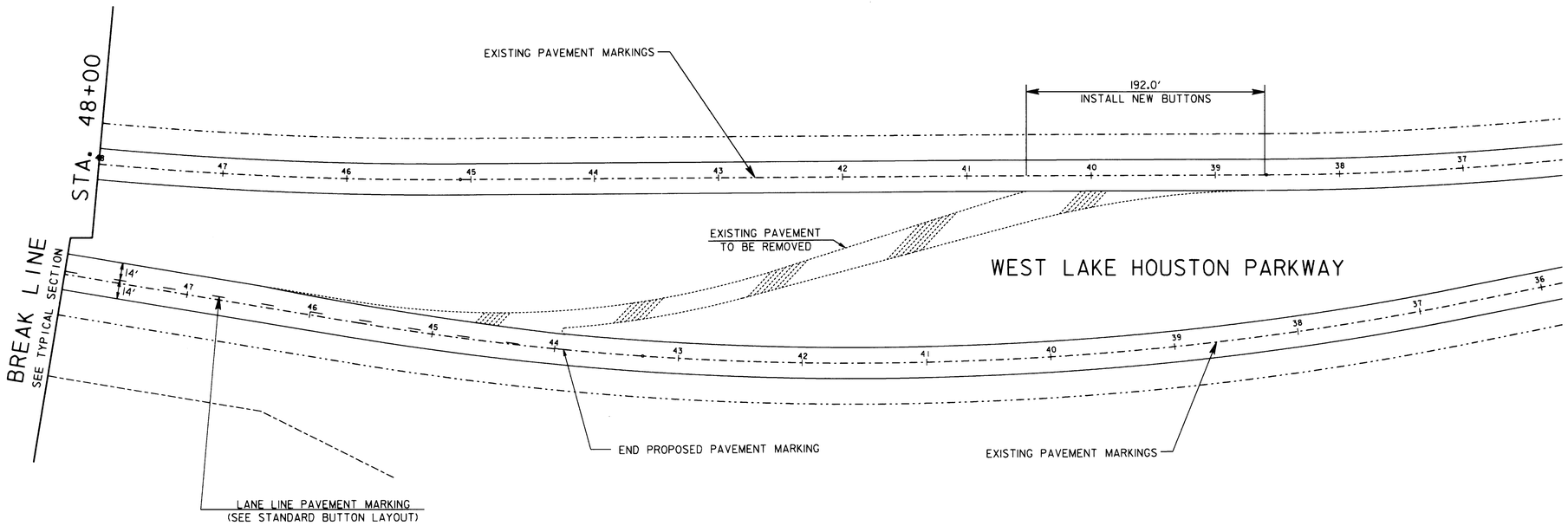

NOTES:
1. FOR BUTTON PLACEMENT, REFER TO CITY OF HOUSTON STANDARD BUTTON LAYOUT.
2. ALL LANE LINE TRAFFIC BUTTONS ARE TO BE 5' C-C.

TRAFFIC BUTTONS			* OBJECT MARKERS		*WINGED POST	* SIGNS
WHITE		YELLOW	OM-3R	OM-3L	(2.0 LB)(9.5 FT)	
NON-REFLECTIVE	REFLECTIVE (ONE DIRECTION)	REFLECTIVE (ONE DIRECTION)				
EA	EA	EA	EA	EA	EA	EA
530	2470	1906	2	2	4	4

* TO BE PAID FOR UNDER ITEM 624

FOLD UP POSITION

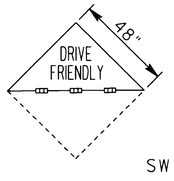

FOLD DOWN POSITION

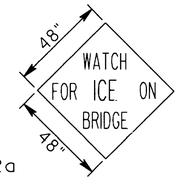

SW19-2a

THE SEAL APPEARING ON THIS DOCUMENT WAS AUTHORIZED BY CRAIG L. HESTER, P.E. 65414 ON 4-30-1992.

CITY OF HOUSTON

APPROVALS

WATER DESIGN — 5/19/92	STREET, BRIDGE & R.O.W. — 5/12/92
WATER QUALITY — 6/1/92	STORM SEWERS DESIGN — 5/14/92
CONSTRUCTION — 5/27/92	WASTEWATER DESIGN — 5/13/92
TRAFFIC & TRANSPORTATION	PLANNING & DEVELOPMENT DEPT.
ASST. DIRECTOR OF CAPITAL PROJECTS	DIRECTOR OF CAPITAL PROJECTS — 6-4-92

NO.	DATE	REVISION	APPROV.
4			
3			
2			
1			

WEST LAKE HOUSTON PARKWAY
WEST FORK SAN JACINTO RIVER BRIDGE

SIGNING AND PAVEMENT
STA. 74+00 TO EXISTING

Turner Collie & Braden Inc.
ENGINEERS • PLANNERS

Unit	SUTTON	Scale	1" = 50'	Date	FEBRUARY, 1992
Designed	CLH	Checked	RES	Job No.	6268012022 Contract
Drawn	JOEF	Approved		Sheet	43 of 50

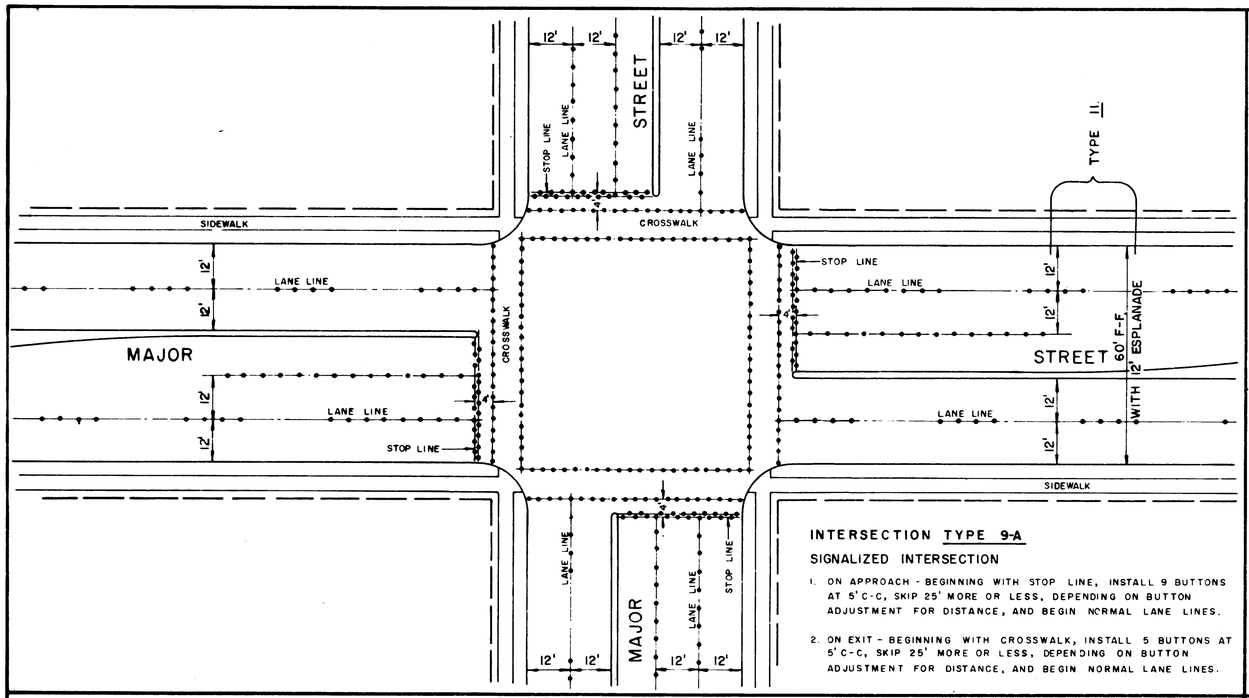

INTERSECTION TYPE 9-A

SIGNALIZED INTERSECTION

1. ON APPROACH - BEGINNING WITH STOP LINE, INSTALL 9 BUTTONS AT 5' C-C, SKIP 25' MORE OR LESS, DEPENDING ON BUTTON ADJUSTMENT FOR DISTANCE, AND BEGIN NORMAL LANE LINES.
2. ON EXIT - BEGINNING WITH CROSSWALK, INSTALL 5 BUTTONS AT 5' C-C, SKIP 25' MORE OR LESS, DEPENDING ON BUTTON ADJUSTMENT FOR DISTANCE, AND BEGIN NORMAL LANE LINES.

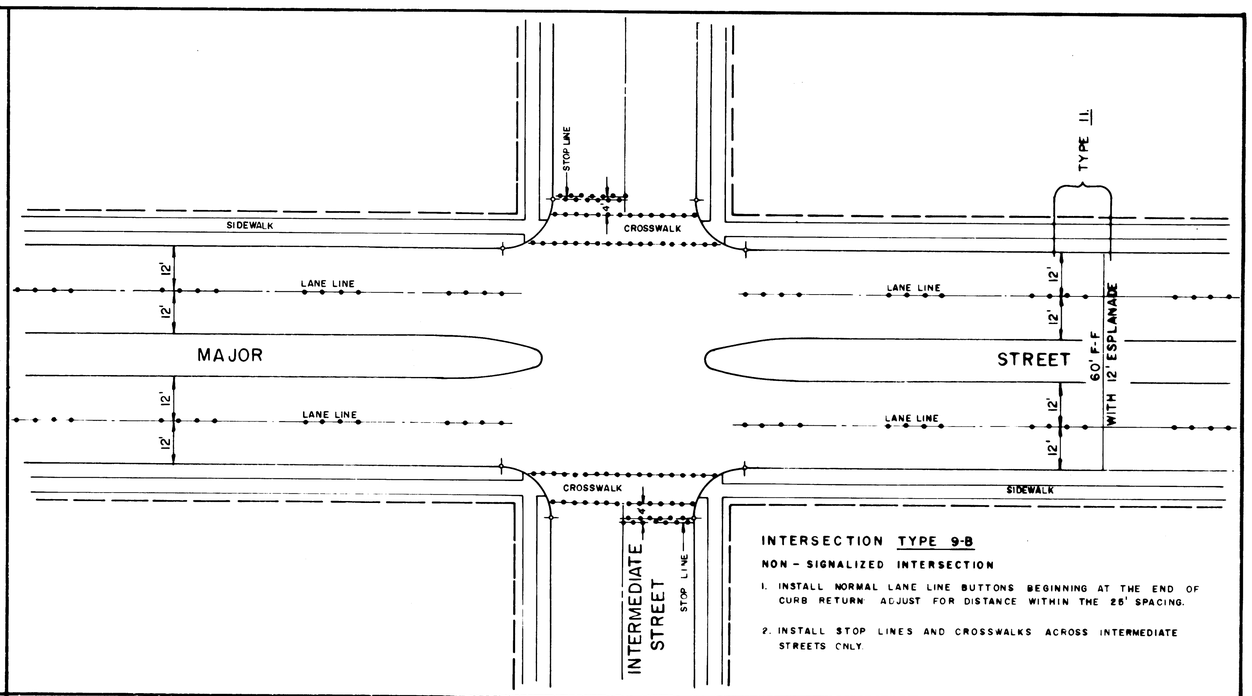

INTERSECTION TYPE 9-B

NON - SIGNALIZED INTERSECTION

1. INSTALL NORMAL LANE LINE BUTTONS BEGINNING AT THE END OF CURB RETURN. ADJUST FOR DISTANCE WITHIN THE 26' SPACING.
2. INSTALL STOP LINES AND CROSSWALKS ACROSS INTERMEDIATE STREETS ONLY.

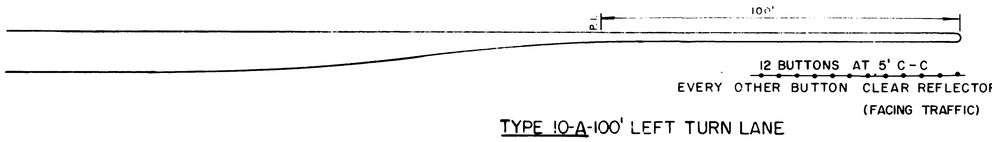

TYPE 10-A-100' LEFT TURN LANE

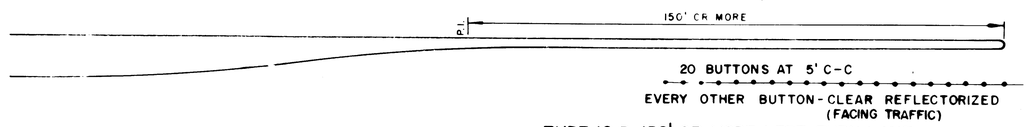

TYPE 10-B-150' OR MORE LEFT TURN LANE

33' ROADWAY

MAY BE USED IN A 78' CROSS-ECTION (TWO 33' ROADWAYS WITH A 12' ESPLANADE).

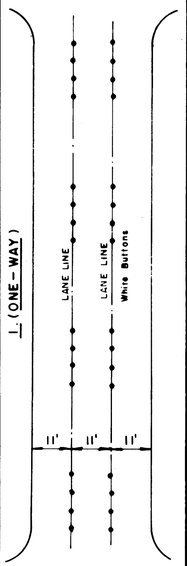

36' ROADWAY

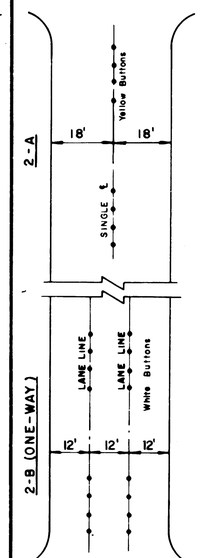

30'-35'-40' ROADWAY

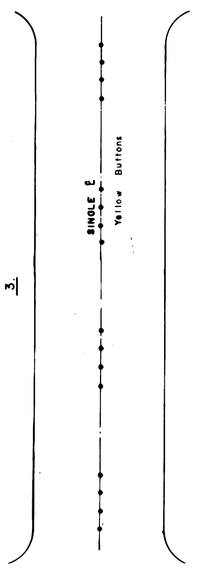

44' ROADWAY

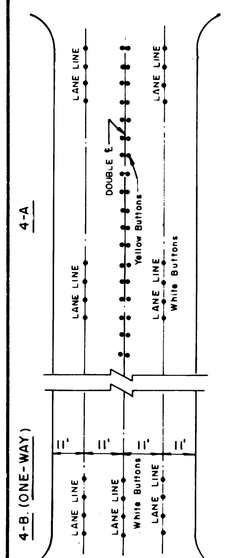

52' THRU 56' ROADWAY

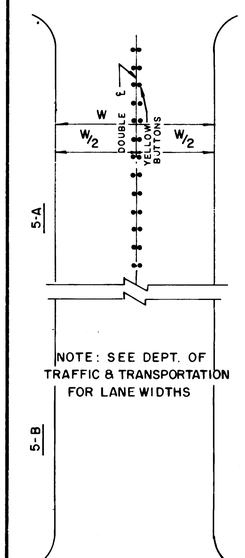

NOTE: SEE DEPT. OF TRAFFIC & TRANSPORTATION FOR LANE WIDTHS

60' ROADWAY

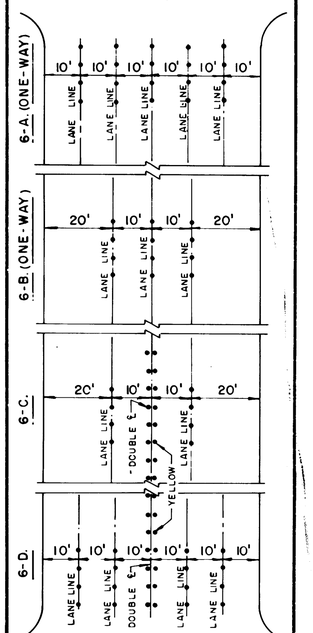

BUTTON LEGEND

1. YELLOW — BUTTON WITH REFLECTOR - BOTH DIRECTIONS
2. YELLOW — BUTTON - NON REFLECTIVE
3. WHITE — FACING TRAFFIC — BUTTON WITH REFLECTOR - ONE DIRECTION
4. WHITE — BUTTON - NON REFLECTIVE

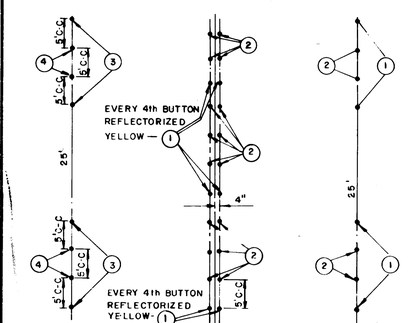

LANE LINE BUTTON DETAIL

DOUBLE ℄ BUTTON DETAIL

SINGLE ℄ BUTTON DETAIL

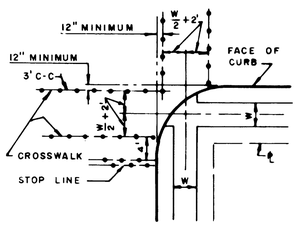

CROSSWALK BUTTON DETAIL

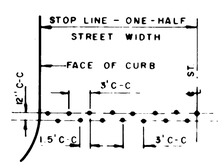

STOP LINE BUTTON DETAIL

1. MINIMUM CROSSWALK WIDTH 6' C-C.
2. CROSSWALK BUTTONS AND STOP LINE BUTTONS TO BE STAGGERED AS SHOWN
3. FOR SKEW INTERSECTIONS AND STREET WIDTHS NOT SHOWN, SEE DEPARTMENT OF TRAFFIC AND TRANSPORTATION.
4. ROADWAY WIDTHS OF 27' OR LESS SHALL HAVE NO BUTTONS.
5. ALL CENTER LINE BUTTONS SHALL BE YELLOW AND LANE LINE BUTTONS SHALL BE WHITE.
6. SPACING FOR EDGE LINE BUTTONS IS 5' C.-C.

CITY OF HOUSTON
DEPARTMENT OF TRAFFIC & TRANSPORTATION

STANDARD BUTTON LAYOUT

Approved _____ DIRECTOR _____

Checked by _____ Drawn by MKL STD. File No. 5750

Date 11-10-75 Scale NONE

JOB NO. 62-80-01-2020 SHEET 44 OF 50

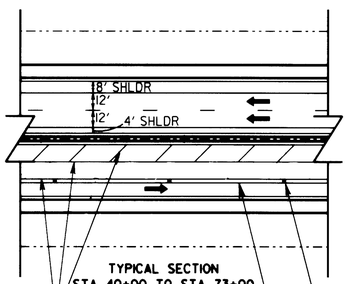

TYPICAL SECTION
STA. 40+00 TO STA. 73+00

REMOVE EXISTING PAVEMENT MARKING

CHANNELIZING DEVICES DRUMS @ 90' SPACING

4" YELLOW

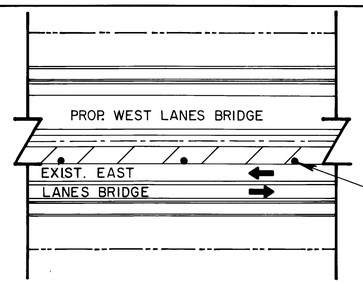

CHANNELIZING DEVICES DRUMS @ 90' SPACING TO BE FURNISHED & MAINTAINED DURING CONSTRUCTION OF WEST LANES BRIDGE. VERTICAL PANELS TO BE PROVIDED ON ALTERNATE DRUMS. (1)

EXISTING STRIPING CONDITION

NOTES:
1. ALL TRAFFIC CONTROL ACTIVITIES ARE TO CONFORM TO THE TEXAS MANUAL ON UNIFORM TRAFFIC CONTROL DEVICES.
2. A MINIMUM 11'-0" LANE WIDTH SHALL BE MAINTAINED AT ALL TIMES.
3. TWO WEEKS PRIOR TO ANY ALTERATION IN TRAFFIC PATTERNS, THE CONTRACTOR SHALL PROVIDE THE ENGINEER, FOR HIS APPROVAL, A LAYOUT SHOWING ALL SIGNS, BARRICADES, STRIPING, AND SIGNALZATION. THE APPROVAL OF THIS LAYOUT BY THE ENGINEER WILL NOT RELIEVE THE CONTRACTOR OF HIS RESPONSIBILITY FOR THE PROTECTION OF THE TRAVEL PUBLIC.
4. FLAG MEN SHALL BE PROVIDED WHEN CONSTRUCTION ACTIVITIES INCROACH UPON TRAVEL LANES.

WEST LAKE HOUSTON PARKWAY

END CONSTRUCTION

12'
12'

320' TAPER

TRAILER OR TRUCK WITH FLASHER OR ARROW PANEL

CHANNELIZING DEVICES DRUMS W/CHEVRONS @ 35' SPACING

CHANNELIZING DEVICES DRUMS @ 90' SPACING .

REMOVE EXISTING PAVEMENT MARKING

8' SHLDR
12'
12'
4' SHLDR

11'

4" YELLOW

BREAKLINE STA. 40+00
SEE TYPICAL SECTION

23+60 25+20 26+80 27+22

ROAD CONSTRUCTION AHEAD
CW20-1D

LEFT LANE CLOSED AHEAD
CW20-5D

CW4-2L

SPEED LIMIT 30
R2-1

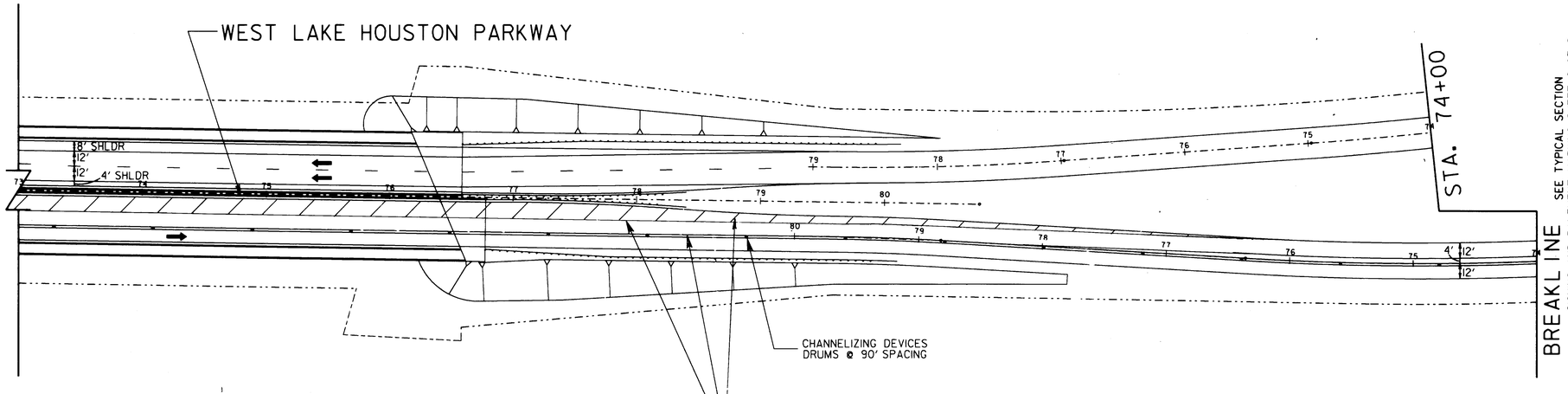

CHANNELIZING DEVICES DRUMS @ 90' SPACING

REMOVE EXISTING PAVEMENT MARKING

PHASE I

— REMOVE EXISTING HATCHING FROM NORTHBOUND LANES

— PLACE PERMANENT PAVEMENT MARKINGS ON NORTHBOUND LANES

STATE OF TEXAS
CRAIG L. HESTER
65414
REGISTERED
ENGINEER

THE SEAL APPEARING ON THIS DOCUMENT WAS AUTHORIZED BY CRAIG L. HESTER, P.E. 65414 ON 4-30-, 1992.

CITY OF HOUSTON

APPROVALS

WATER DESIGN 5/19/92	STREET, BRIDGE & R.O.W. 5/19/92
WATER QUALITY 6/1/92	STORM SEWERS DESIGN 5/19/92
CONSTRUCTION 5/27/92	WASTEWATER DESIGN
TRAFFIC & TRANSPORTATION	PLANNING & DEVELOPMENT DEPT.

ASST. DIRECTOR OF CAPITAL PROJECTS 6-1-92 DIRECTOR OF CAPITAL PROJECTS

NO.	DATE	REVISION	APPROV.
4			
3			
2			
1	6-1792	REVISED EXISTING CONDITION DETAIL	CBM

WEST LAKE HOUSTON PARKWAY
WEST FORK SAN JACINTO RIVER BRIDGE

TRAFFIC CONTROL
PHASE I
EXISTING TO STA. 74+00

Turner Collie & Braden Inc.
ENGINEERS • PLANNERS

Unit	SUTTON	Scale:	1" = 50'	Date	FEBRUARY, 1992
Designed	CLH	Checked	RES	Job No. 6268012022	Contract
Drawn	JOEF	Approved		Sheet	45 of 50

NOTES:
1. ALL TRAFFIC CONTROL ACTIVITIES ARE TO CONFORM TO THE TEXAS MANUAL ON UNIFORM TRAFFIC CONTROL DEVICES.
2. A MINIMUM 11'-0" LANE WIDTH SHALL BE MAINTAINED AT ALL TIMES.

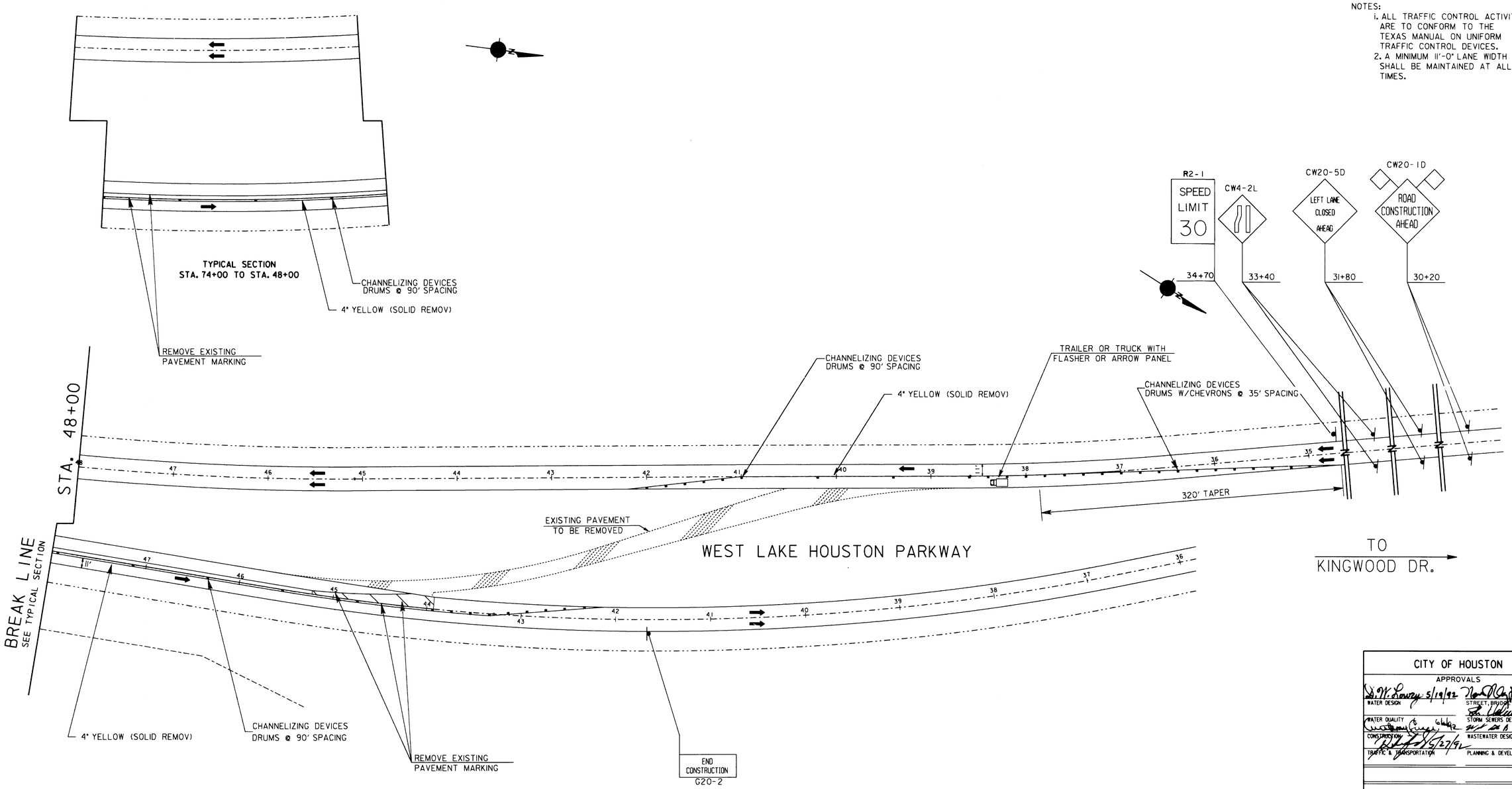

① * QUANTITIES SHOWN ARE APPROXIMATE AND ARE FOR CONTRACTORS INFORMATION ONLY. EXISTING PAINT STRIPES SHALL BE REMOVED BY SAND-BLASTING OR BY OTHER METHODS APPROVED BY HARRIS COUNTY.

EXIST. PAVEMENT MARKINGS TO BE REMOVED *			YELLOW REMOVABLE	WHITE REMOVABLE
PAINT		PAVEMENT MARKER	SOLID	SOLID
4" LF	12" LF	EA	4" LF	4" LF
26500	3675	480	9710	5260

TRAFFIC CONTROL PHASE I & PHASE II

PHASE I

— REMOVE EXISTING PAVEMENT

— PLACE PERMANENT PAVEMENT MARKINGS

STATE OF TEXAS
CRAIG L. HESTER
65414
REGISTERED PROFESSIONAL ENGINEER

THE SEAL APPEARING ON THIS DOCUMENT WAS AUTHORIZED BY CRAIG L. HESTER, P.E. 65414 ON 4-30-, 1992.

CITY OF HOUSTON

APPROVALS

D. W. Lowry 5/19/92 WATER DESIGN	5/13/92 STREET, BRIDGE & R.O.W.
WATER QUALITY 6/6/92	5-14-92 STORM SEWERS DESIGN
CONSTRUCTION 5/27/92	5/10/92 WASTEWATER DESIGN
TRAFFIC & TRANSPORTATION	PLANNING & DEVELOPMENT DEPT.
ASST. DIRECTOR OF CAPITAL PROJECTS	6-1-92 DIRECTOR OF CAPITAL PROJECTS

NO.	DATE	REVISION	APPROV.
4			
3			
2			
①	6-17-92	ADDED EXISTING PAVEMENT MARKING NOTES	CBM

WEST LAKE HOUSTON PARKWAY
WEST FORK SAN JACINTO RIVER BRIDGE

TRAFFIC CONTROL
PHASE I
STA. 74+00 TO EXISTING

Turner Collie & Braden Inc.
ENGINEERS • PLANNERS

Unit	SUTTON	Scale:	1" = 50'	Date	FEBRUARY ,1992
Designed	CLH	Checked	RES	Job No. 6268012022	Contract
Drawn	JOEF	Approved		Sheet 46	of 50

NOTES:
1. ALL TRAFFIC CONTROL ACTIVITIES ARE TO CONFORM TO THE TEXAS MANUAL ON UNIFORM TRAFFIC CONTROL DEVICES.
2. A MINIMUM 11'-0" LANE WIDTH SHALL BE MAINTAINED AT ALL TIMES.

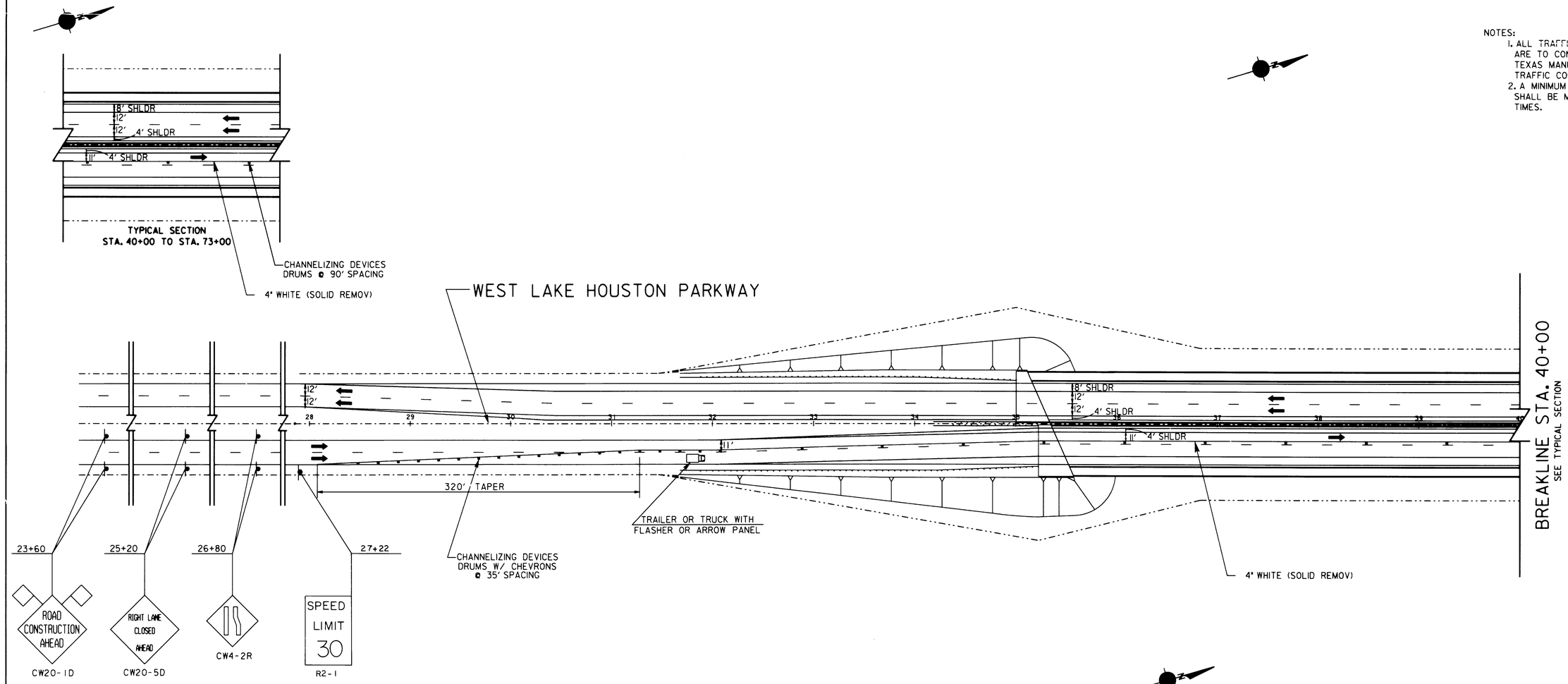

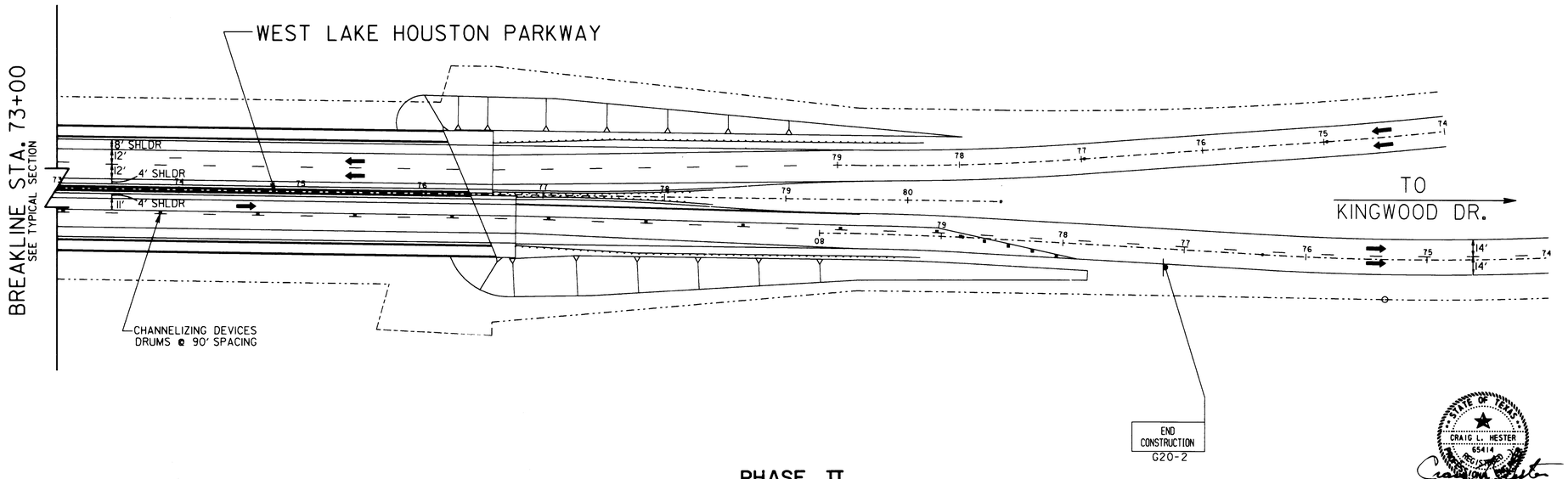

PHASE II

— PLACE PERMANENT PAVEMENT MARKINGS ON NORTHBOUND LANES

STATE OF TEXAS
CRAIG L. HESTER
65414
REGISTERED PROFESSIONAL ENGINEER

THE SEAL APPEARING ON THIS DOCUMENT WAS AUTHORIZED BY CRAIG L. HESTER, P.E. 65414 ON 4-30-, 1992.

CITY OF HOUSTON

APPROVALS

D.W. Lowry 5/19/92	5/13/92
WATER DESIGN	STREET, BRIDGE & R.O.W.
	5.14.92
WATER QUALITY	STORM SEWERS DESIGN
5/27/92	5/13/92
CONSTRUCTION	WASTEWATER DESIGN
5/27/92	
TRAFFIC & TRANSPORTATION	PLANNING & DEVELOPMENT DEPT.
	6-1-92
ASST.DIRECTOR OF CAPITAL PROJECTS	DIRECTOR OF CAPITAL PROJECTS

NO.	DATE	REVISION	APPROV.
4			
3			
2			
1			

WEST LAKE HOUSTON PARKWAY
WEST FORK SAN JACINTO RIVER BRIDGE

TRAFFIC CONTROL
PHASE II
EXISTING TO STA. 74+00

Turner Collie & Braden Inc.
ENGINEERS • PLANNERS

Unit	SUTTON	Scale:	1" = 50'	Date	FEBRUARY ,1992
Designed	CLH	Checked	RES	Job No. 6268012022	Contract
Drawn	JOEF	Approved		Sheet 47	of 50

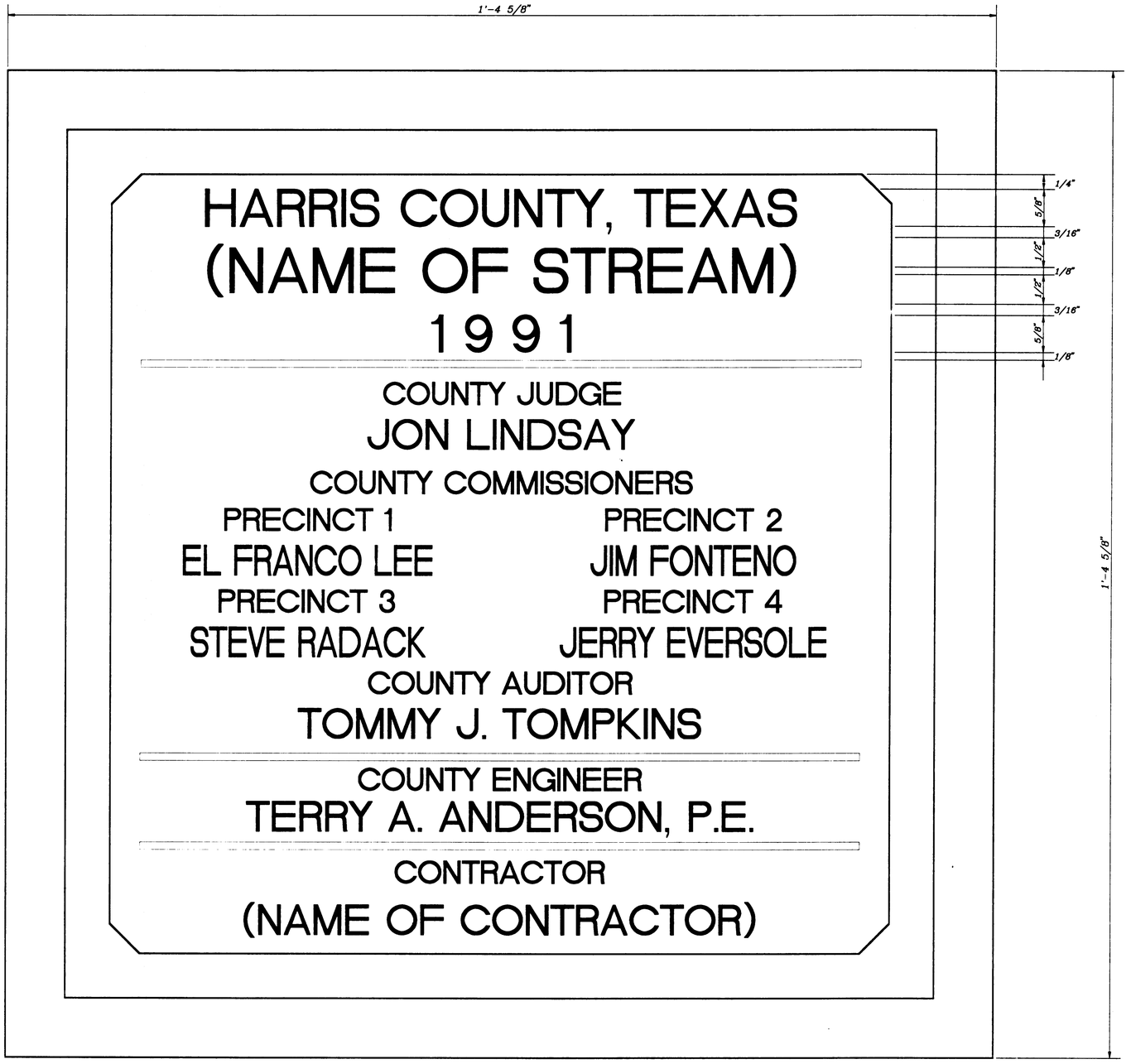

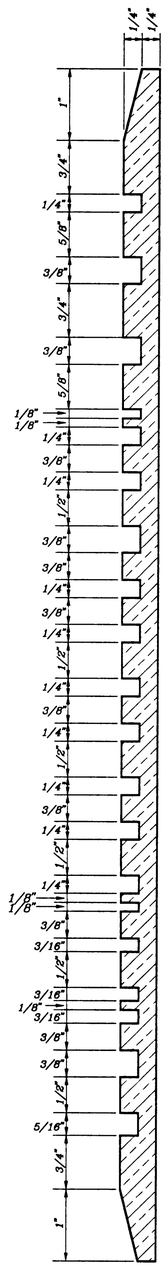

NOTES

1. *The contractor shall submit a rubbing of the proposed plaque to the County Engineer for approval prior to final construction. Harris County reserves the right to make name changes at that time.*
2. *The plaque shall be constructed of cast aluminum.*
3. *Use this spacing and letter height when two lines are required for name of stream.*

NO	REVISIONS	DATE	NAME

HARRIS COUNTY
ENGINEERING DEPARTMENT

HARRIS COUNTY 1639 TEXAS

PROJECT TITLE: WEST LAKE HOUSTON PARKWAY
WEST FORK SAN JACINTO RIVER BRIDGE

DRAWN BY: RP	SHEET DESCRIPTION: BRIDGE PLAQUE	JOB NO.
CH'D BY:	WEST LAKE HOUSTON PARKWAY BRIDGE	FILE NAME: PLAQUE
SCALE: FULL	BRIDGE NO. 4118-55	FILE NO. ACAD
DATE: 08/07/91	APPROVED BY:	SHT NO. 48/50

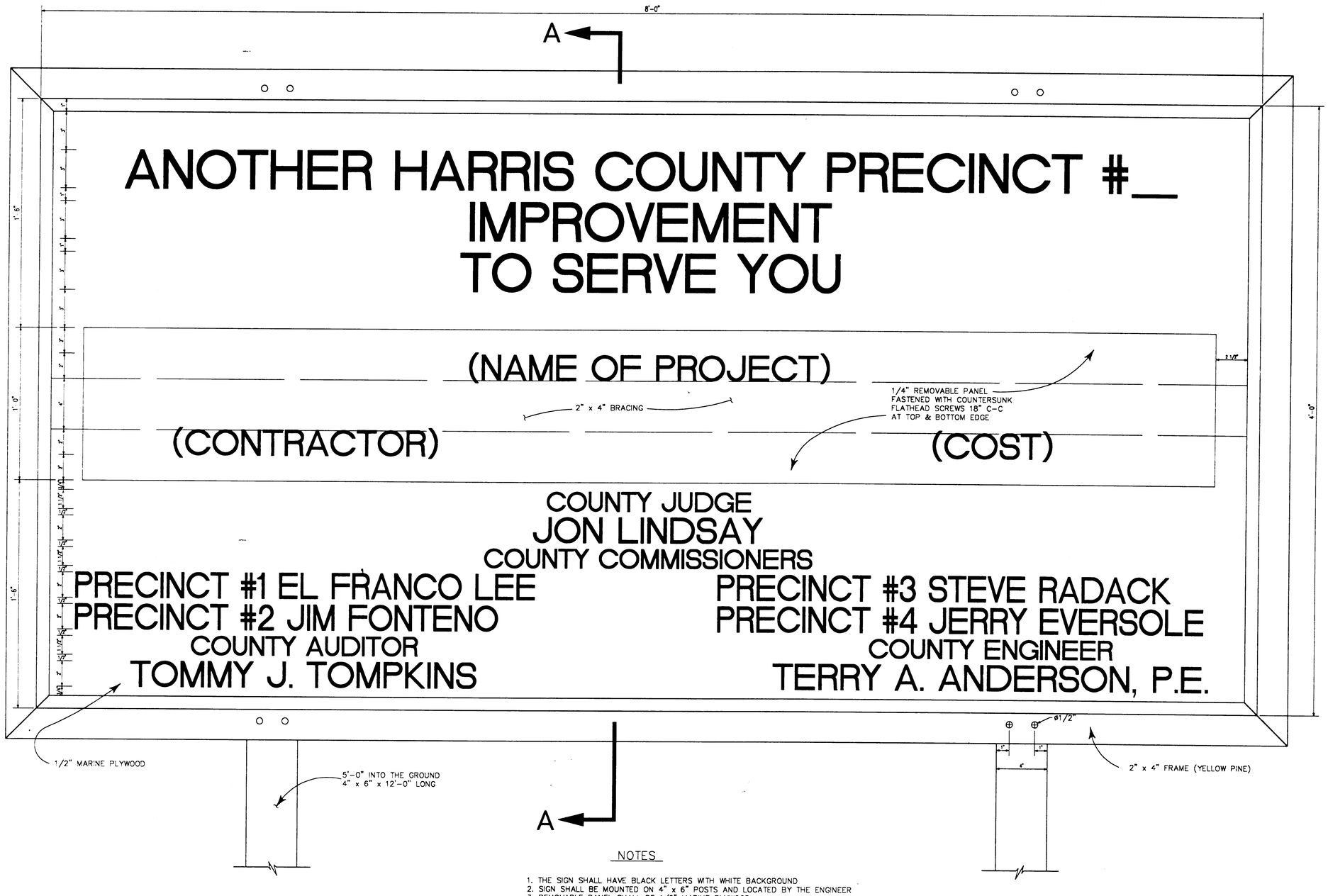

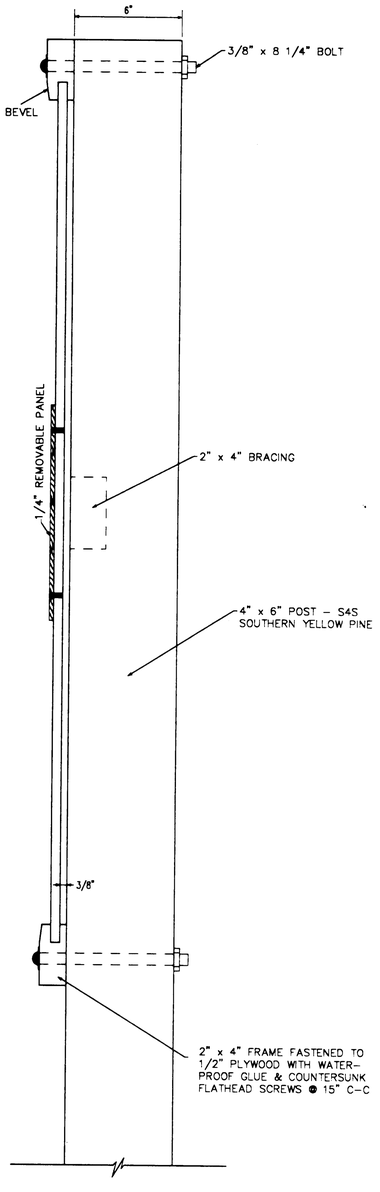

SECTION A-A

NOTES

1. THE SIGN SHALL HAVE BLACK LETTERS WITH WHITE BACKGROUND
2. SIGN SHALL BE MOUNTED ON 4" x 6" POSTS AND LOCATED BY THE ENGINEER
3. REMOVABLE PANEL SHALL BE 1/2" MARINE PLYWOOD
4. ALL BOLTS SH4. ALL BE GALVANIZED OR CADMIUM PLATED
5. 4" x 6" POSTS SHALL BE WOLMANIZED OR PENTACHLOROPHENOL TREATED
6. ALL WOOD SURFACES SH6. ALL HAVE PRIME COAT AND TWO COATS OF SHERWIN-WILLAMS KEM-LUSTRAL ENAMEL OR EQUAL.

NO.	REVISIONS	DATE	NAME

HARRIS COUNTY
ENGINEERING DEPARTMENT

HARRIS COUNTY 1836 TEXAS

PROJECT TITLE: WEST LAKE HOUSTON PARKWAY
WEST FORK SAN JACINTO RIVER BRIDGE

DRAWN BY: FAD	SHEET DESCRIPTION: PROJECT SIGN	JOB NO:
CK'D BY:	WEST LAKE HOUSTON PARKWAY BRIDGE	FILE NAME: PROJSIGN
SCALE: 3"=1'-0"	BRIDGE NO. 4118-55	FILE NO:
DATE: 08/07/91	APPROVED BY:	SHT. NO: 49/50

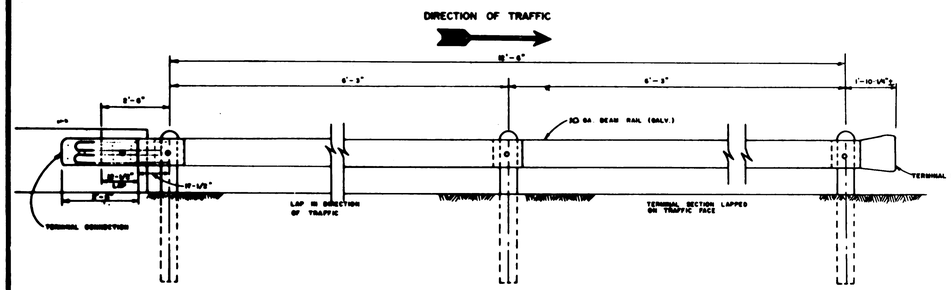

ELEVATION OF GUARD RAIL

NOT TO SCALE

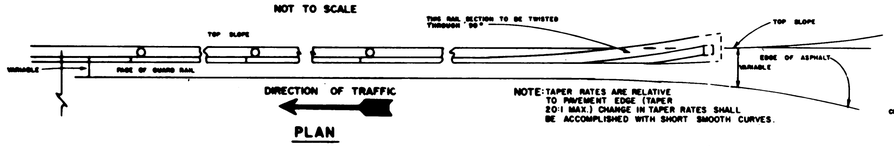

NOTE: TAPER RATES ARE RELATIVE TO PAVEMENT EDGE (TAPER 20:1 MAX.) CHANGE IN TAPER RATES SHALL BE ACCOMPLISHED WITH SHORT SMOOTH CURVES.

PLAN

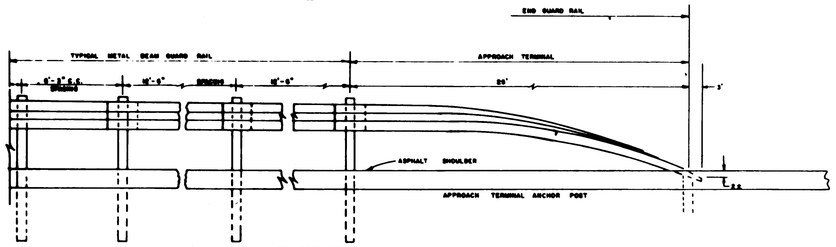

ELEVATION

APPROACH TERMINAL DETAIL

(IN EMBANKMENT AREAS)

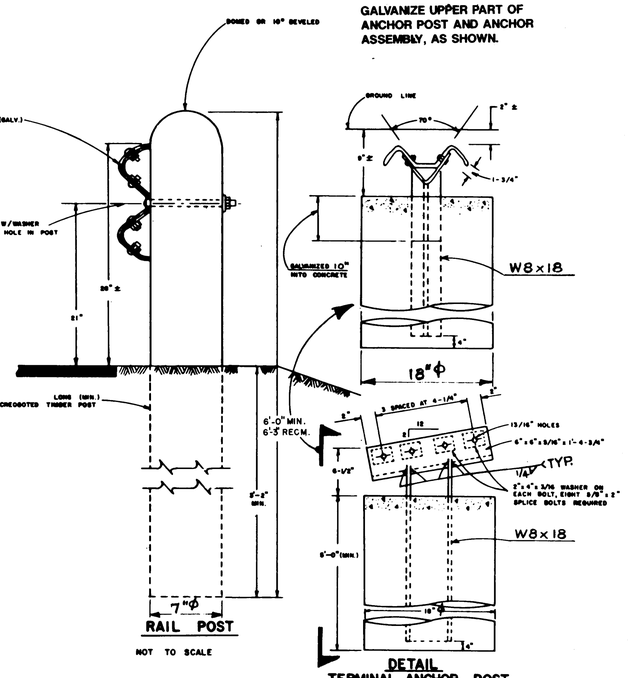

GENERAL NOTES:

1. Except where used at structures or where otherwise indicated on plans, the guard fence shall be located a minimum of one foot from the shoulder edge on existing roadways and a minimum of two feet from the shoulder edge on new construction. The exact position shall be as shown elsewhere on the plans or as directed by the Engineer. Rail shall be transitioned to a smooth connection with other structure or structure railing as shown elsewhere on plans.
2. At the option of the contractor, the rail elements for the guard fence may be furnished in either 12 1/2 foot or 25 foot nominal lengths, rail shall be furnished with post bolt slots for 5/8" diameter bolt connection to posts.
3. Bolts shall be of sufficient length to extend through the full thickness of the nut and no more than 3/4" beyond it.
4. The top of the terminal anchor post assembly and all steel fittings thereon shall be galvanized as shown. Rail elements and all fittings shall be galvanized.
5. Where rock is encountered or where shown on the plans, the diameter of the holes and the material for backfilling shall be as directed by the Engineer. Timber posts shall not be set in concrete.
6. The terminal anchor post shall be set in Class "C" concrete in accordance with Item 421, "Structural Concrete". Concrete shall be subsidiary to the bid item, "Flex Beam Guard Rail".
7. Timber posts may be beveled at approximately 10 degrees on the top or both ends with high side of top of post placed toward the roadway or they may be domed.
8. An anchor other than to a terminal anchor post shall consist of a connection similar to the rail splice or similar to terminal connector.
9. Special fabrication will be required in installations having a curvature of less than 150 foot radius.
10. Post spacing will be 6'-3" except that the first post will be 25 feet from the terminal anchor post and the next posts spaced at 12'-6" with a minimum of 8 posts adjacent to structures spaced at 3'-1 1/2", unless noted.
11. Terminal anchor post may be used with the 18"ø x5'-0" concrete footing or the angle anchor (revised) may be used with the 2'-6" square of equivalent concrete footing, with approval of Engineer.
12. Crown will be widened to accommodate guard fence.
13. Provide 4 additional shop or field drilled holes in end of guard fence for attachment to terminal anchor post. Rail members may be bolted to angle at terminal anchor and the two assemblies positioned to proper alignment prior to placing concrete around W8x18 posts.
14. All rail and component parts shall be galvanized by the hot dip process and shall contain not less than 2 oz/per square foot of galvanization in accordance with A.S.T.M. A153-82 or latest revision. All parts shall be given a chromeate dip after galvanization to give the rail a shiny appealing look.
15. Unless otherwise shown in plans, guard fence placed in the vicinity of curb shall be blocked out so that the face of curb is located directly below or behind the face of rail. Rail placed over curbs shall be installed so that the post bolt is located approximately 21-inches above the gutter pan or roadway surface.

Openings for rail posts are to have a 1/2" expansion joint material around the rail posts.

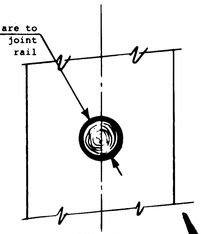

SECTION

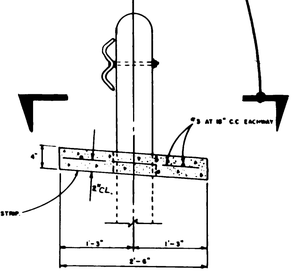

MOWING STRIP TO BE PROVIDED ONLY WHERE CALLED FOR ELSEWHERE IN PLANS. MOWING STRIP WILL NOT BE PAID FOR DIRECTLY BUT SHALL BE CONSIDERED INCIDENTAL TO VARIOUS BID ITEMS

MOWING STRIP DETAILS

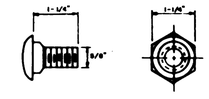

ANCHOR OR SPLICE BOLT 5/8" NUT POST BOLT:

SIMILAR EXCEPT LENGTH (7/8" HEX BOLTS REQUIRED FOR SPECIAL END SHOE.)

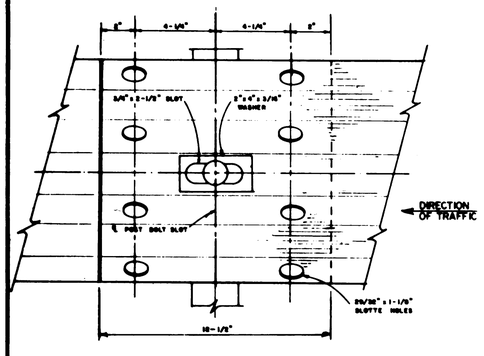

RAIL SPLICE

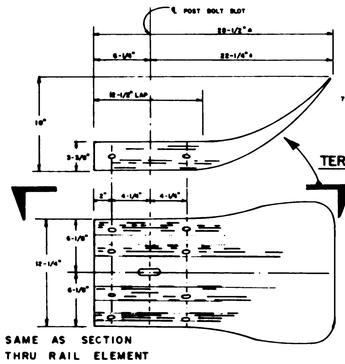

SAME AS SECTION THRU RAIL ELEMENT

TERMINAL SECTION

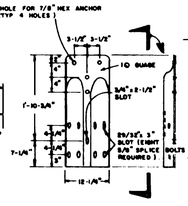

TERMINAL CONNECTOR

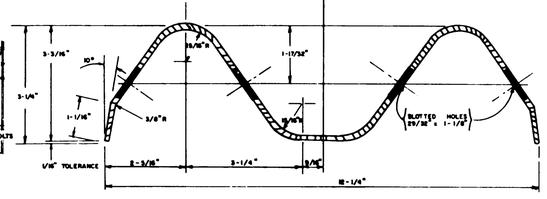

SECTION THRU RAIL ELEMENT

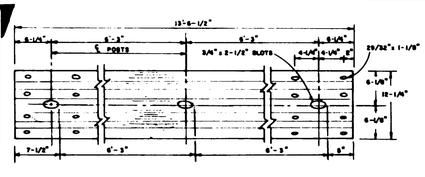

ELEVATION OF GUARD RAIL

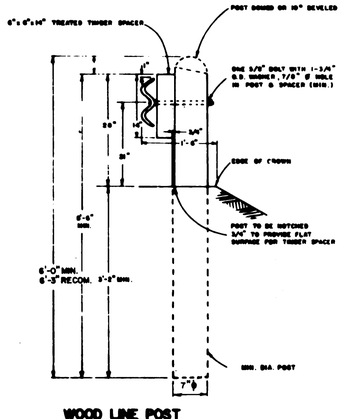

WOOD LINE POST (BLOCKOUT)

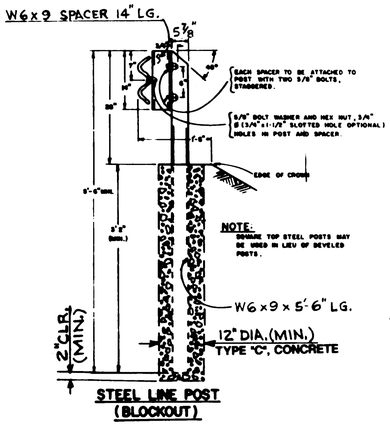

STEEL LINE POST (BLOCKOUT)

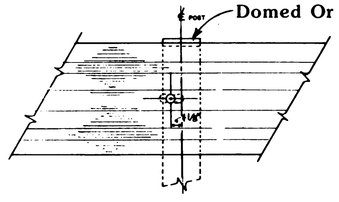

POST CONNECTION STEEL POST

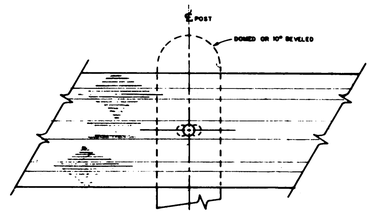

POST CONNECTION WOOD POST

NOTE: WOOD POST MAY BE DOWED OR BEVELED

NO.	REVISIONS	DATE	NAME
2	REV'D. BM RAIL (GALV.) SIZE TO 10 GA. AND ADDED SECTION SHOWING OPENING SIZE FOR RAIL POST @ "MOWING STRIP DETAIL"	10/20/99	NT
1	7"ø WOOD LINE POST	11/04	RAE

HARRIS COUNTY ENGINEERING DEPARTMENT

SCALE: NOT TO SCALE — DESIGNED BY: — DRAWN BY: NT

DATE: MARCH, 1987 — CHK'D BY: — I.S. BY:

FLEX BEAM GUARD RAIL

JOB NO. 6268012020

HARRIS COUNTY ENGINEERING DEPARTMENT
HARRIS COUNTY, TEXAS

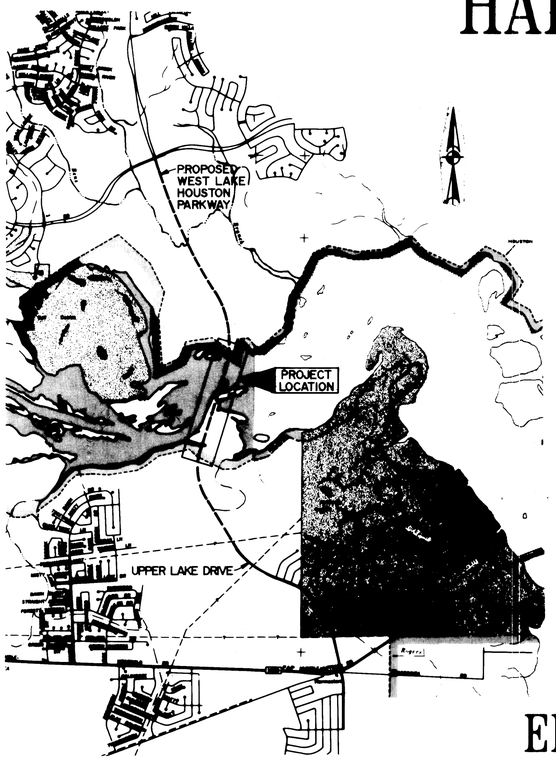

VICINITY MAP
SCALE : 1" = 1.5 MILES

CONSTRUCTION OF WEST LAKE HOUSTON PARKWAY BRIDGE OVER WEST FORK SAN JACINTO RIVER (LAKE HOUSTON) EAST LANES - BRIDGE NO. 4118-51

1982 BOND FUND 2030 PRECINCT FOUR

PROGRAM NO. 001 ACCOUNT NO. 2815

ORGANIZATION NO. 104

PRIVATE UTILITIES SHOWN :

CENTRAL TELEPHONE
COMPANY OF TEXAS

EL FRANCO LEE
COMMISSIONER PRECINCT NO. 1

JIM FONTENO
COMMISSIONER PRECINCT NO. 2

J.F. FLACK
COUNTY AUDITOR

JON LINDSAY
COUNTY JUDGE

STEVE RADACK
COMMISSIONER PRECINCT NO. 3

JERRY EVERSOLE
COMMISSIONER PRECINCT NO. 4

TERRY A. ANDERSON, P.E.
COUNTY ENGINEER

HARRIS COUNTY 1836 TEXAS

Turner Collie & Braden Inc.
ENGINEERS • PLANNERS

INDEX OF DRAWINGS

SHEET	DESCRIPTION
1	TITLE SHEET
2-10	BRIDGE LAYOUT (1 OF 9 THRU 9 OF 9)
11-15	SOIL BORING INFORMATION (1 OF 5 THRU 5 OF 5)
16	ABUTMENT BENT 1
17	ABUTMENT BENT 33
18	MISCELLANEOUS ABUTMENT DETAILS 1 OF 2
19	MISCELLANEOUS ABUTMENT DETAILS 2 OF 2
20	INTERIOR BENT DETAILS 1 OF 2
21	INTERIOR BENT DETAILS 2 OF 2
22	BEARING SEAT ELEVATIONS
23	FRAMING PLAN
24	PRESTRESSED BEAMS DETAILS 1 OF 2
25	PRESTRESSED BEAMS DETAILS 2 OF 2
26-30	SLAB DETAILS (1 OF 5 THRU 5 OF 5)
31-32	SLAB ELEVATIONS
33	APPROACH SLAB AND SLOPE PROTECTION DETAILS
34	TYPE C4 RAIL DETAILS
35	BRIDGE RAILING DETAILS
36	SEALED EXPANSION JOINT DETAILS
*~~37~~	~~TYPICAL BRIDGE STRIPING LAYOUT~~ DELETED
38	BRIDGE PLAQUE
39	HARRIS COUNTY ENGINEERING PROJECT SIGN
40	MITIGATION AREA NO. 1 CLEARING, GRADING AND PLANTING
41	MITIGATION AREA NO. 2 PLANTING
*19A	MODIFICATIONS TO ABUTMENT 1
*37A	PAVEMENT MARKING & FLEX BEAM GUARD RAIL LAYOUT
*37B	PROPOSED DITCH & STORM SEWER OUTFALL SLOPE PAVING

* NOTE:

SHEET 37 DELETED & SHEETS 19A, 37A, 37B ADDED BY CHANGES IN CONTRACT.

AF 39185

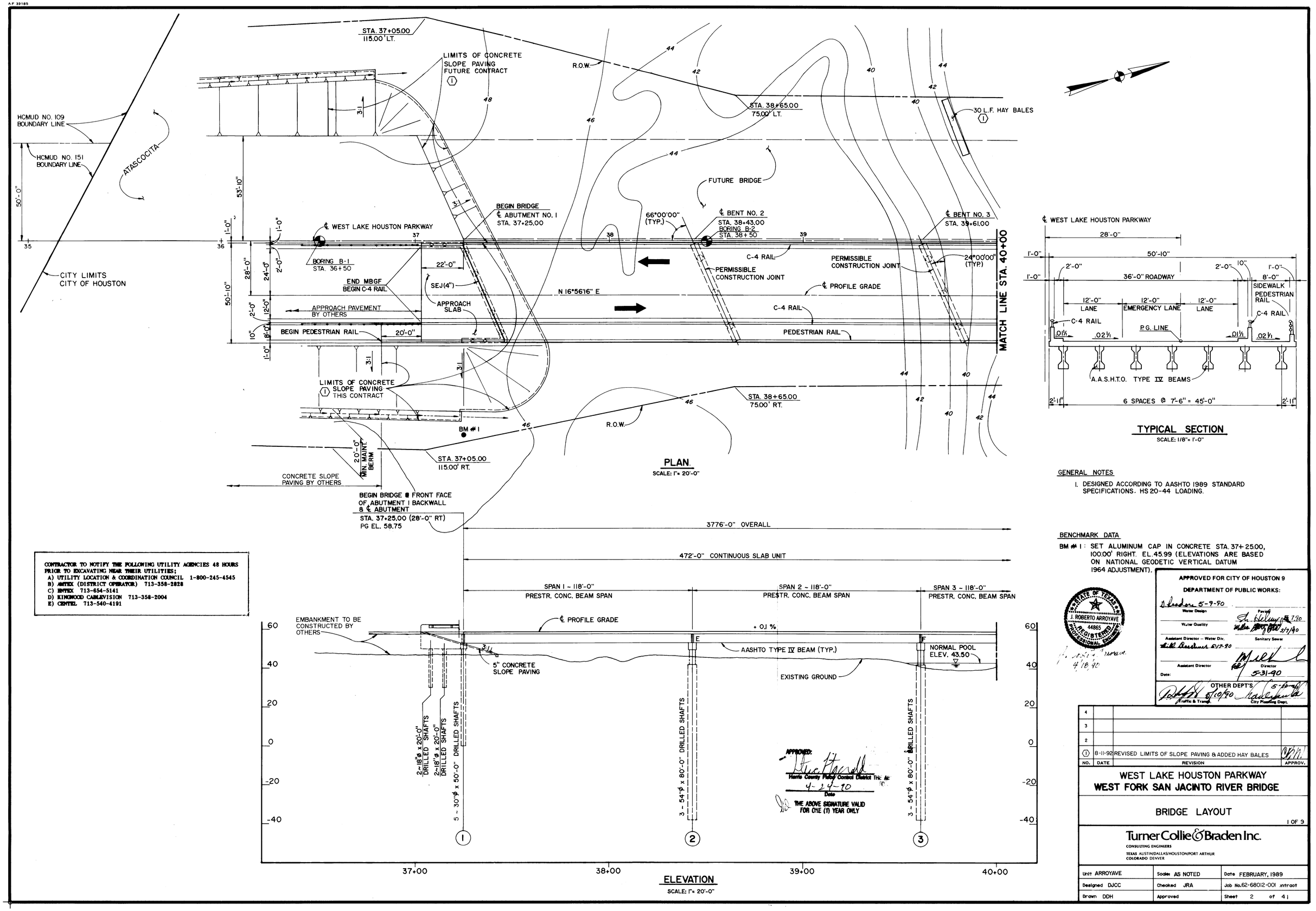

PLAN
SCALE: 1"= 20'-0"

TYPICAL SECTION
SCALE: 1/8"= 1'-0"

GENERAL NOTES

1. DESIGNED ACCORDING TO AASHTO 1989 STANDARD SPECIFICATIONS. HS 20-44 LOADING.

BENCHMARK DATA

BM # 1 : SET ALUMINUM CAP IN CONCRETE STA. 37+ 25.00, 100.00' RIGHT. EL. 45.99 (ELEVATIONS ARE BASED ON NATIONAL GEODETIC VERTICAL DATUM 1964 ADJUSTMENT).

CONTRACTOR TO NOTIFY THE FOLLOWING UTILITY AGENCIES 48 HOURS PRIOR TO EXCAVATING NEAR THEIR UTILITIES:
A) UTILITY LOCATION & COORDINATION COUNCIL 1-800-245-4545
B) AMTEX (DISTRICT OPERATOR) 713-358-2828
C) ENTEX 713-654-5141
D) KINGWOOD CABLEVISION 713-358-2004
E) CENTEL 713-540-4191

ELEVATION
SCALE: 1"= 20'-0"

APPROVED:
Harris County Flood Control District
THE: 4-24-90
Date
THE ABOVE SIGNATURE VALID FOR ONE (1) YEAR ONLY

APPROVED FOR CITY OF HOUSTON 9
DEPARTMENT OF PUBLIC WORKS:
Water Design — Date: 5-9-90
Water Quality — Date: 5/7/90
Assistant Director – Water Div. — Date: 5/7/90
Sanitary Sewer
Assistant Director — Date: 5-31-90
Director
OTHER DEPT'S
Traffic & Transp. — Date: 5/10/90
City Planning Dept. — Date: 5-10-90

STATE OF TEXAS
J. ROBERTO ARROYAVE
44865
REGISTERED PROFESSIONAL ENGINEER
4/18/90

NO.	DATE	REVISION	APPROV.
4			
3			
2			
1	8-11-92	REVISED LIMITS OF SLOPE PAVING & ADDED HAY BALES	

WEST LAKE HOUSTON PARKWAY
WEST FORK SAN JACINTO RIVER BRIDGE

BRIDGE LAYOUT

1 OF 9

Turner Collie & Braden Inc.
CONSULTING ENGINEERS
TEXAS AUSTIN/DALLAS/HOUSTON/PORT ARTHUR
COLORADO DENVER

Unit ARROYAVE	Scale AS NOTED	Date FEBRUARY, 1989
Designed DJCC	Checked JRA	Job No.62-68012-001 Intract
Drawn DDH	Approved	Sheet 2 of 41

AF 39185

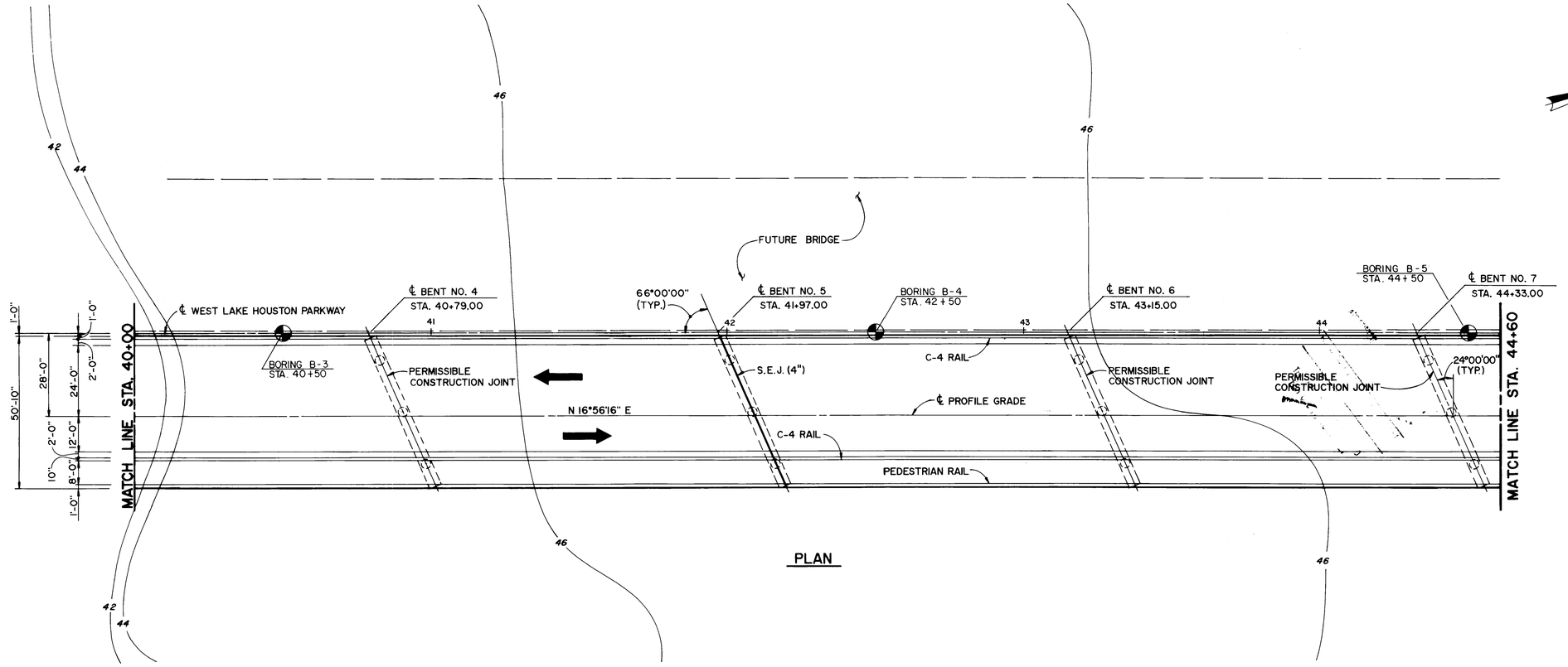

PLAN

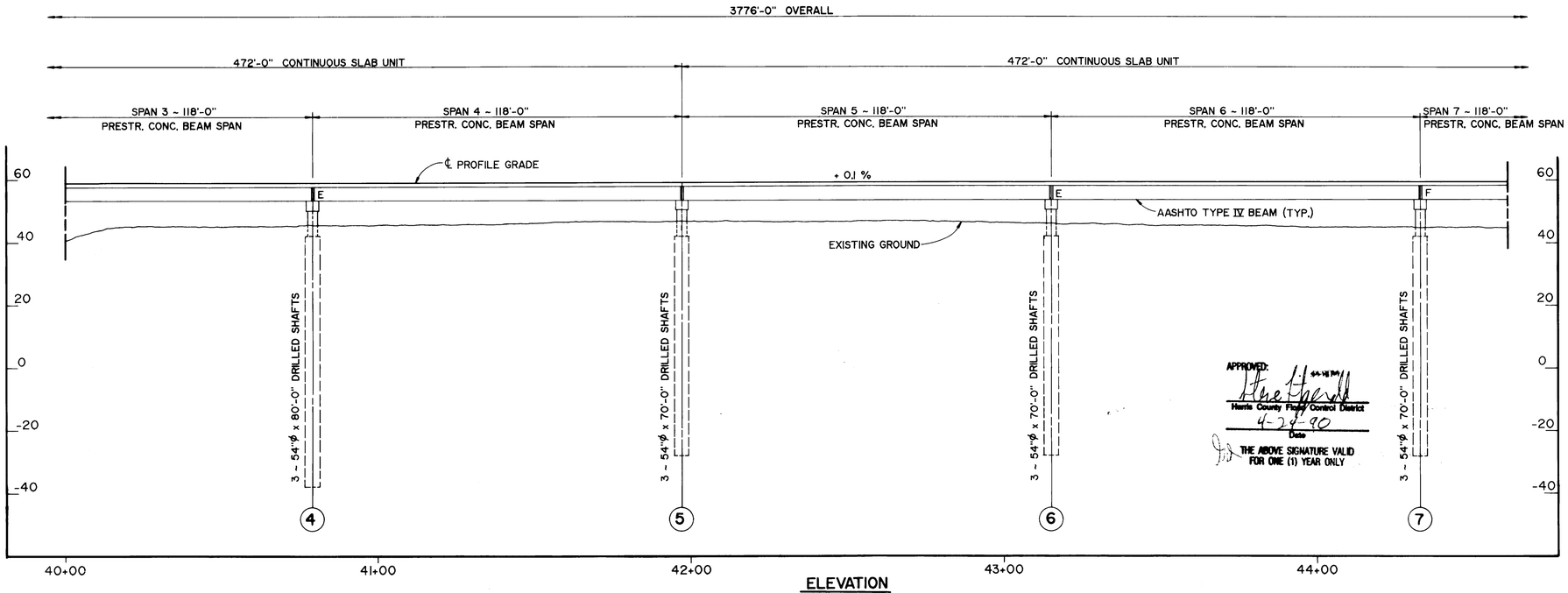

ELEVATION

APPROVED:
Harris County Flood Control District
4-28-90
Date
THE ABOVE SIGNATURE VALID FOR ONE (1) YEAR ONLY

STATE OF TEXAS
J. ROBERTO ARROYAVE
44865
REGISTERED PROFESSIONAL ENGINEER
4/18/90

APPROVED FOR CITY OF HOUSTON 9
DEPARTMENT OF PUBLIC WORKS:

Water Design: 5-9-90	Paving: 5-2-90
Water Quality	Storm Sewer: 5/7/90
Assistant Director – Water Div.: 5-17-90	Sanitary Sewer
Assistant Director	Director: 5-31-90
Date:	OTHER DEPT'S
Traffic & Transp.: 5/16/90	City Planning Dept.

NO.	DATE	REVISION	APPROV.
4			
3			
2			
1			

WEST LAKE HOUSTON PARKWAY
WEST FORK SAN JACINTO RIVER BRIDGE

BRIDGE LAYOUT

2 OF 9

Turner Collie & Braden Inc.
CONSULTING ENGINEERS
TEXAS AUSTIN/DALLAS/HOUSTON/PORT ARTHUR
COLORADO DENVER

Unit ARROYAVE	Scale: 1" = 20'-0"	Date FEBRUARY, 1989
Designed DJCC	Checked JRA	Job No.62-68012-001 ontract
Drawn DDH	Approved	Sheet 3 of 41

A.F. 39185

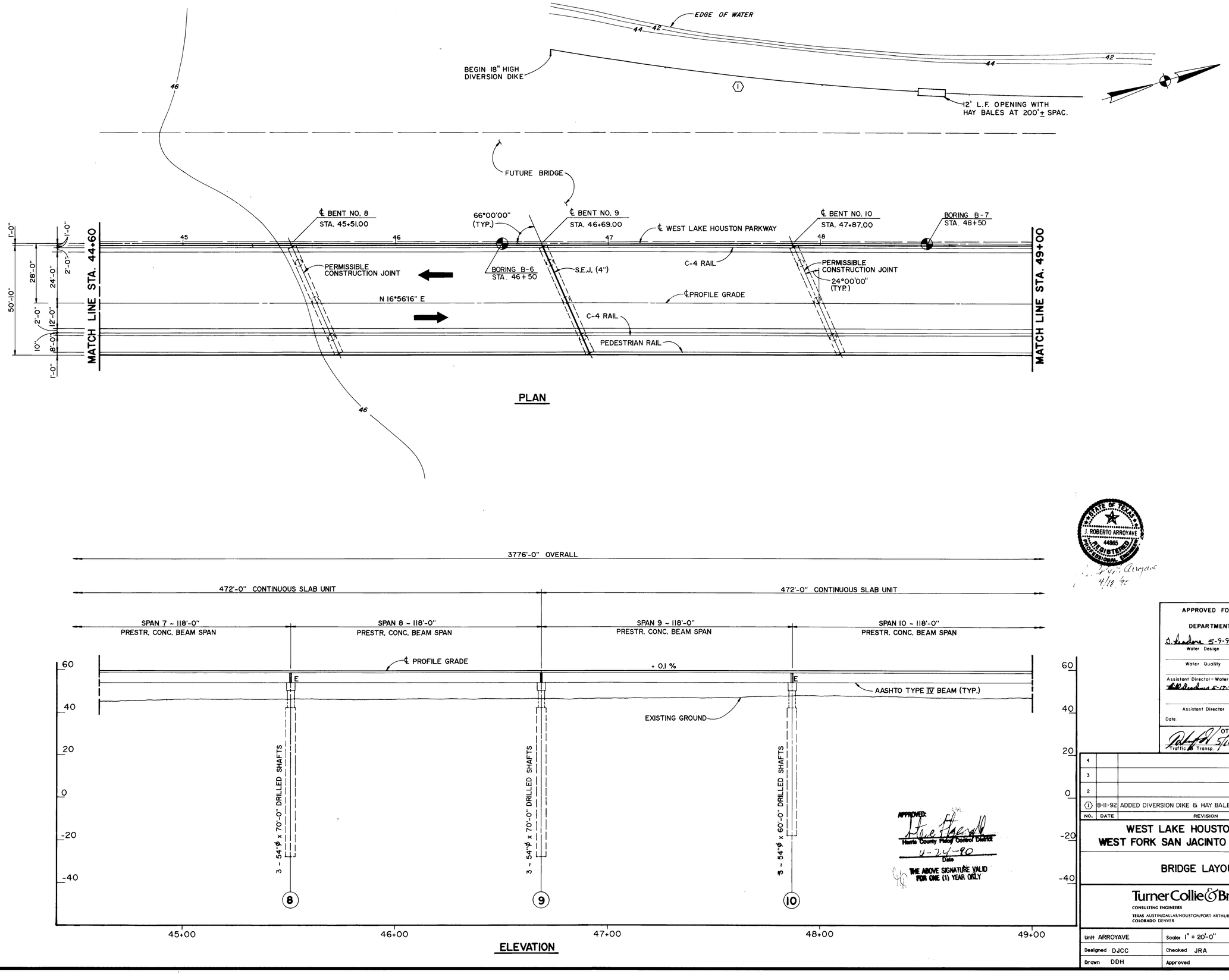

APPROVED FOR CITY OF HOUSTON 9

DEPARTMENT OF PUBLIC WORKS:

Water Design	5-9-90	Paving	5-7-90
Water Quality		Storm Sewer	5/11/90
Assistant Director - Water Div.	5-17-90	Sanitary Sewer	
Assistant Director		Director	5-31-90
Date:			

OTHER DEPT'S

Traffic & Transp. 5/10/90 — City Planning Dept. 5-30-90

NO.	DATE	REVISION	APPROV.
4			
3			
2			
1	8-11-92	ADDED DIVERSION DIKE & HAY BALES	

WEST LAKE HOUSTON PARKWAY
WEST FORK SAN JACINTO RIVER BRIDGE

BRIDGE LAYOUT

3 OF 9

Turner Collie & Braden Inc.

CONSULTING ENGINEERS

TEXAS AUSTIN/DALLAS/HOUSTON/PORT ARTHUR
COLORADO DENVER

Unit ARROYAVE	Scales 1" = 20'-0"	Date FEBRUARY, 1989
Designed DJCC	Checked JRA	Job No.62-68012-001 Contract
Drawn DDH	Approved	Sheet 4 of 41

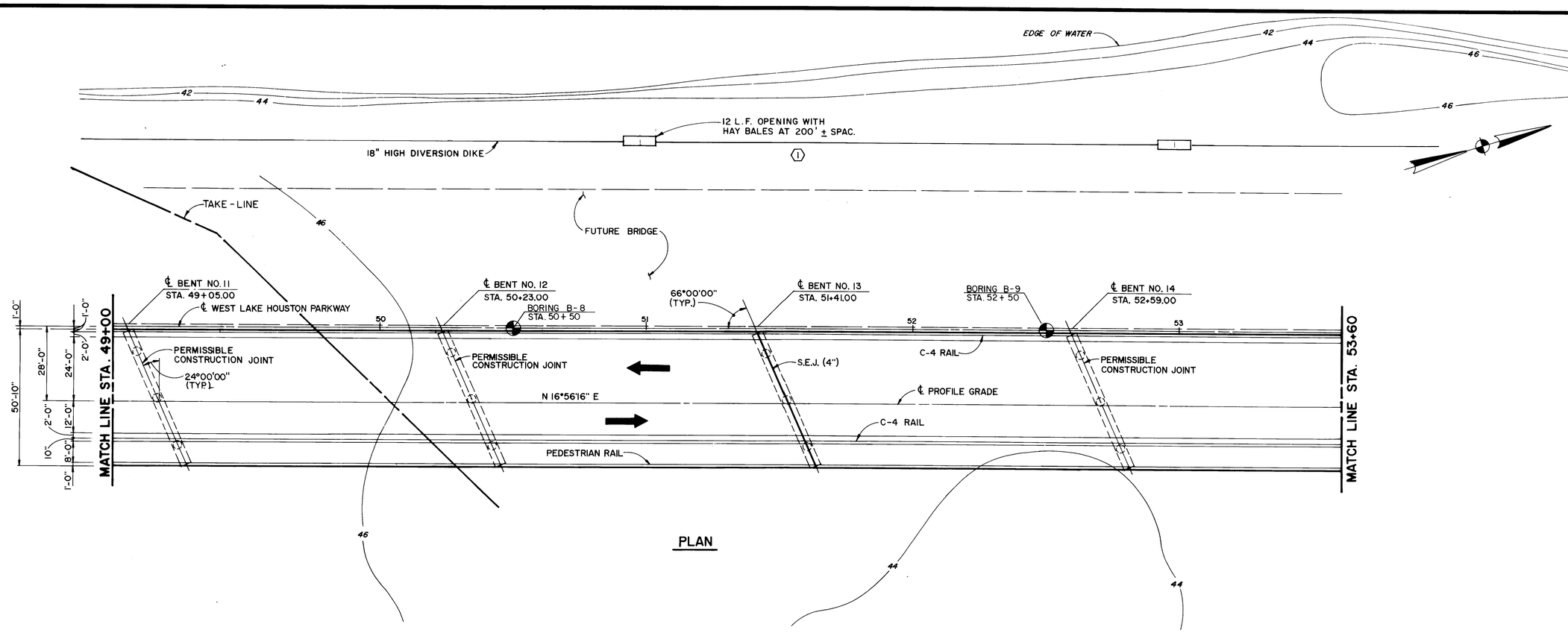

STATE OF TEXAS
J. ROBERTO ARROYAVE
44865
REGISTERED PROFESSIONAL ENGINEER

APPROVED FOR CITY OF HOUSTON 9
DEPARTMENT OF PUBLIC WORKS:

D. Headore 5-9-90
Water Design

Water Quality

Assistant Director – Water Div.

Bill Deschner 5-17-90
Assistant Director

Paving

Sanitary Sewer

Director
5-31-90

Date:

OTHER DEPT'S

Traffic & Transp.

City Planning Dept.

APPROVED:
Harris County Flood Control District
4-24-90
Date
THE ABOVE SIGNATURE VALID FOR ONE (1) YEAR ONLY

NO.	DATE	REVISION	APPROV.
4			
3			
2			
1	8-11-92	ADDED DIVERSION DIKE & HAY BALES	

WEST LAKE HOUSTON PARKWAY
WEST FORK SAN JACINTO RIVER BRIDGE

BRIDGE LAYOUT

4 OF 9

Turner Collie & Braden Inc.
CONSULTING ENGINEERS
TEXAS AUSTIN/DALLAS/HOUSTON/PORT ARTHUR
COLORADO DENVER

Unit ARROYAVE	Scale: 1" = 20'-0"	Date FEBRUARY, 1989
Designed DJCC	Checked JRA	Job No. 62-68012-001 Contract
Drawn DDH	Approved	Sheet 5 of 41

A F 39185

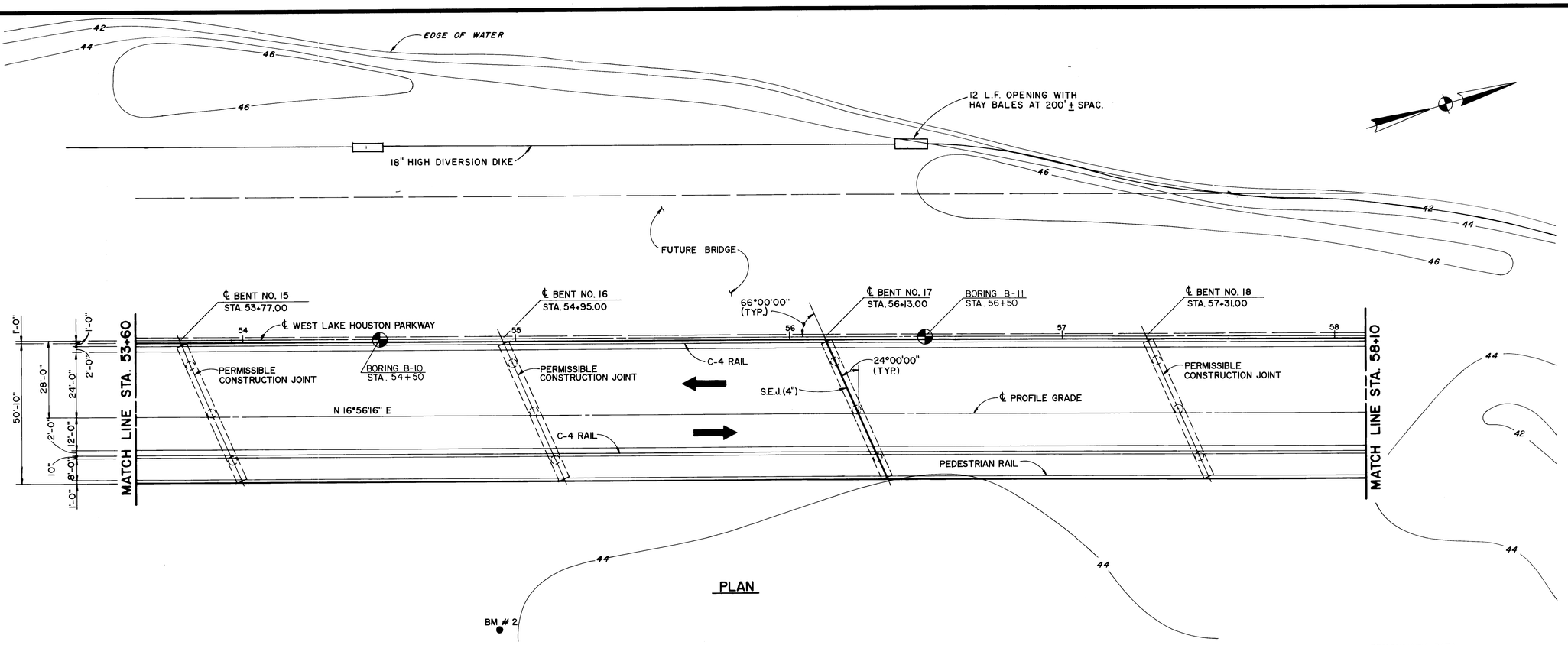

PLAN

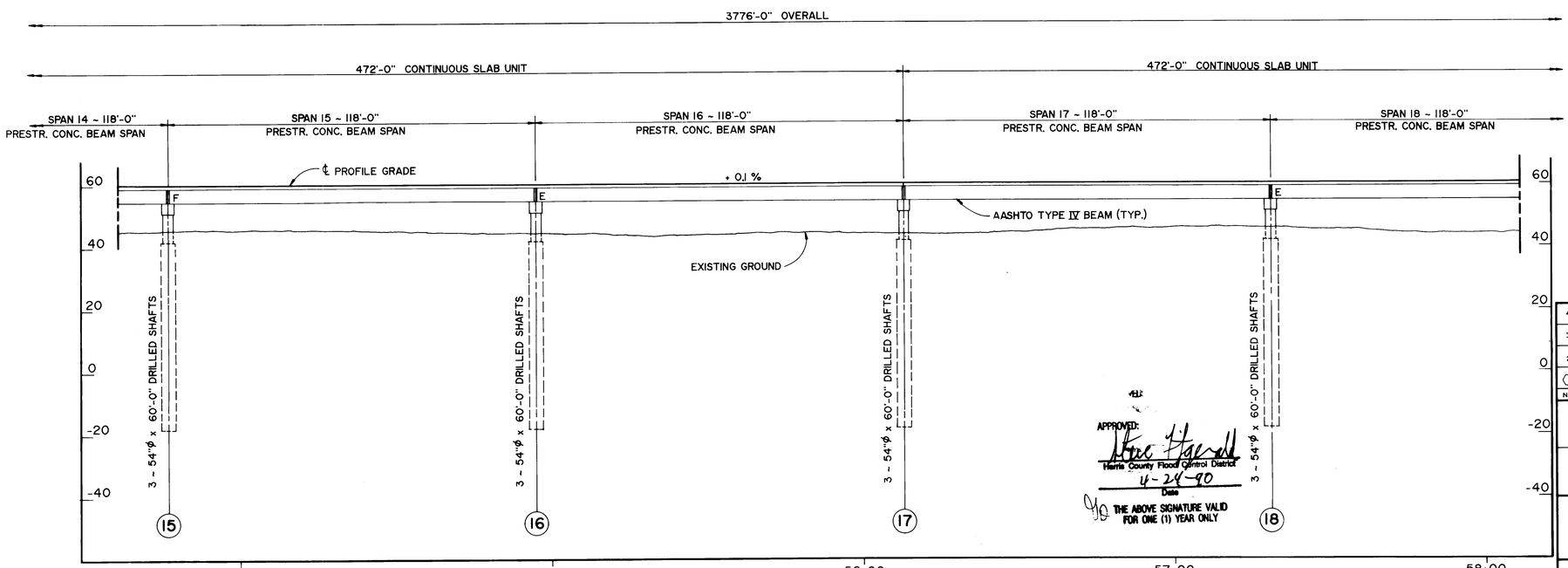

ELEVATION

APPROVED:
Harris County Flood Control District
4-24-90
Date
THE ABOVE SIGNATURE VALID FOR ONE (1) YEAR ONLY

BENCHMARK DATA

BM # 2 : SET ALUMINUM CAP IN CONCRETE STA. 54+93.93, 106.07' RIGHT. EL. 43.92 (ALL ELEVATIONS ARE BASED ON NATIONAL GEODETIC VERTICAL DATUM 1964 ADJUSTMENT).

STATE OF TEXAS
J. ROBERTO ARROYAVE
44865
REGISTERED PROFESSIONAL ENGINEER

APPROVED FOR CITY OF HOUSTON 9
DEPARTMENT OF PUBLIC WORKS:

Water Design: D. Landers 5-9-90
Paving: 5-7-90
Water Quality: 5/9/90
Sanitary Sewer
Assistant Director — Water Div.: 5-12-90
Assistant Director
Director: 5-31-90
Date:
OTHER DEPT'S
Traffic & Transp.
City Planning Dept.

NO.	DATE	REVISION	APPROV.
4			
3			
2			
1	8-11-92	ADDED DIVERSION DIKE & HAY BALES	

WEST LAKE HOUSTON PARKWAY
WEST FORK SAN JACINTO RIVER BRIDGE

BRIDGE LAYOUT

5 OF 9

Turner Collie & Braden Inc.
CONSULTING ENGINEERS
TEXAS AUSTIN/DALLAS/HOUSTON/PORT ARTHUR
COLORADO DENVER

Unit ARROYAVE	Scales 1"= 20'-0"	Date FEBRUARY, 1989
Designed DJCC	Checked JRA	Job No.62-68012-001 Contract
Drawn DDH	Approved	Sheet 6 of 41

A F 39185

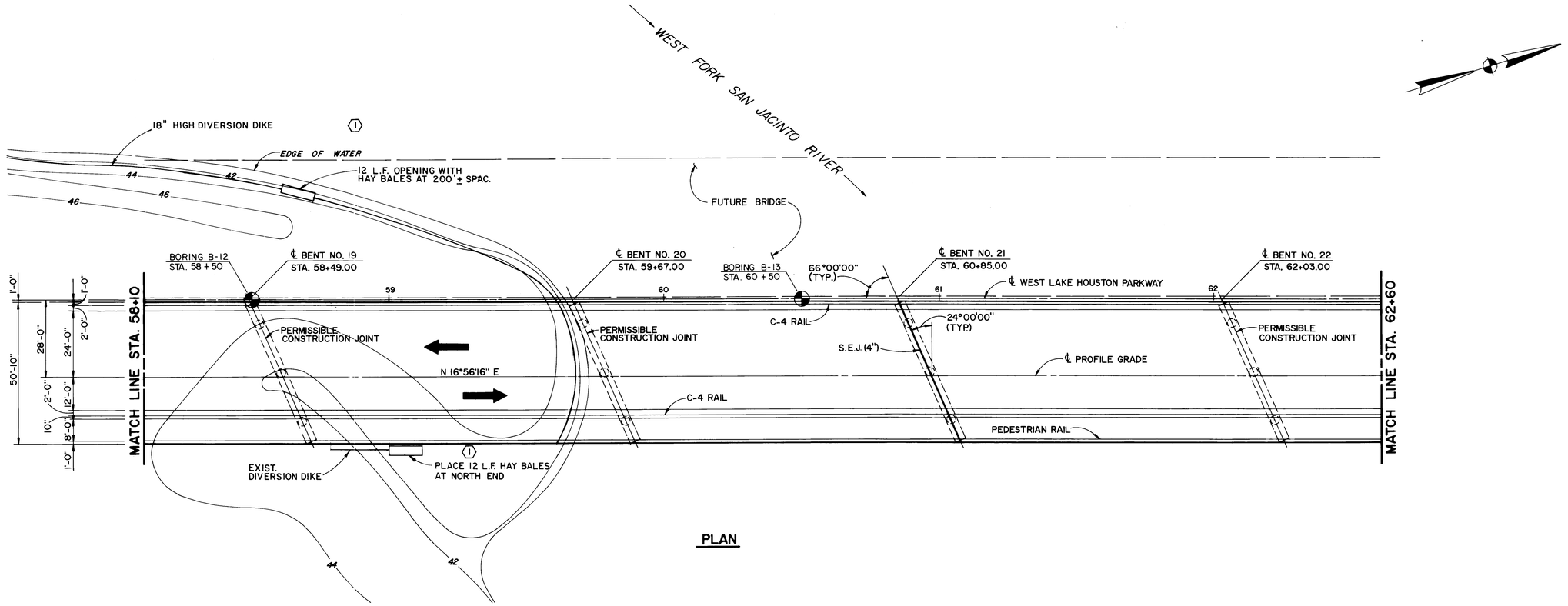

PLAN

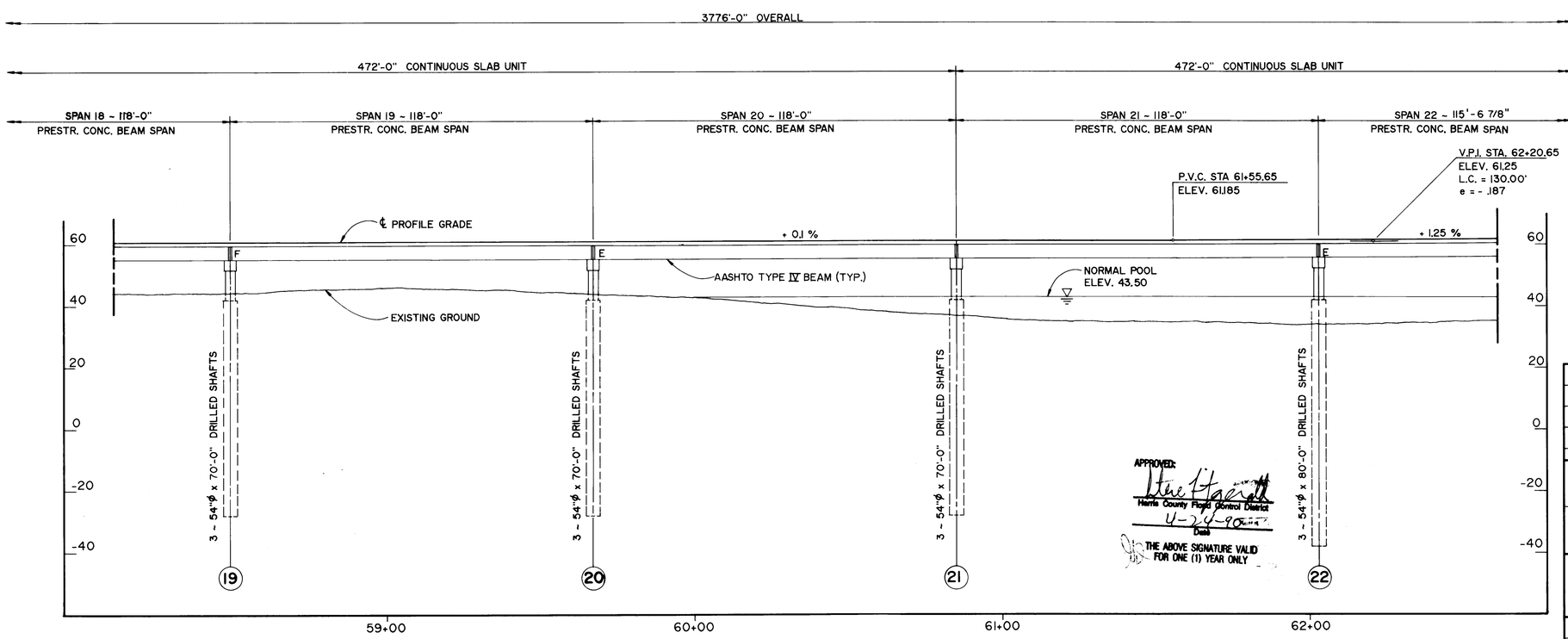

ELEVATION

APPROVED:
Harris County Flood Control District
Date 4-20-90
THE ABOVE SIGNATURE VALID FOR ONE (1) YEAR ONLY

STATE OF TEXAS
ROBERTO ARROYAVE
44865
REGISTERED PROFESSIONAL ENGINEER
4/18/90

APPROVED FOR CITY OF HOUSTON 9
DEPARTMENT OF PUBLIC WORKS:

Water Design	D. Kaadoura 5-9-90	Paving	S. Ekelund 5-7-90
Water Quality		Storm Sewer	William Bell, PE 5/7/90
Assistant Director – Water Div.	Bill Bentura 5-12-90	Sanitary Sewer	
Assistant Director		Director	5-31-90
Date:			
Traffic & Transp.	5/10/90	City Planning Dept.	5-30-90

NO.	DATE	REVISION	APPROV.
4			
3			
2			
1	8-11-92	ADDED DIVERSION DIKE & HAY BALES	

WEST LAKE HOUSTON PARKWAY
WEST FORK SAN JACINTO RIVER BRIDGE

BRIDGE LAYOUT

6 OF 9

Turner Collie & Braden Inc.
CONSULTING ENGINEERS
TEXAS AUSTIN/DALLAS/HOUSTON/PORT ARTHUR
COLORADO DENVER

Unit ARROYAVE	Scales 1" = 20'-0"	Date FEBRUARY, 1989
Designed DJCC	Checked JRA	Job No.62-68012-001 Contract
Drawn DDH	Approved	Sheet 7 of 41

AF 39185

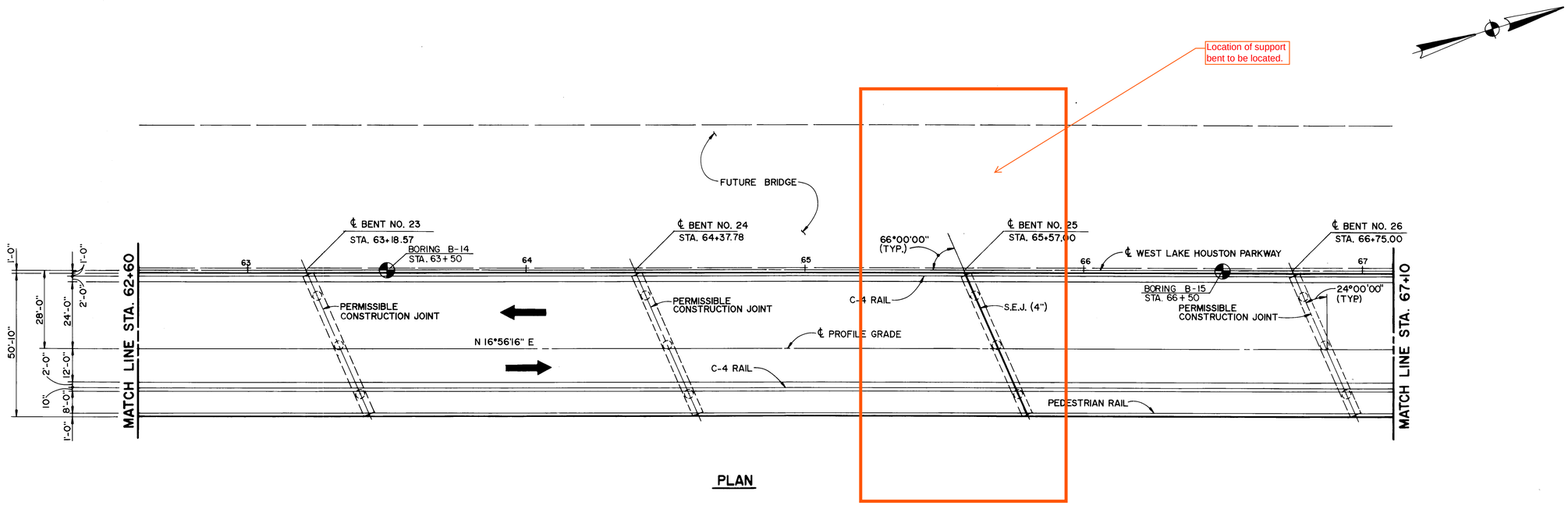

PLAN

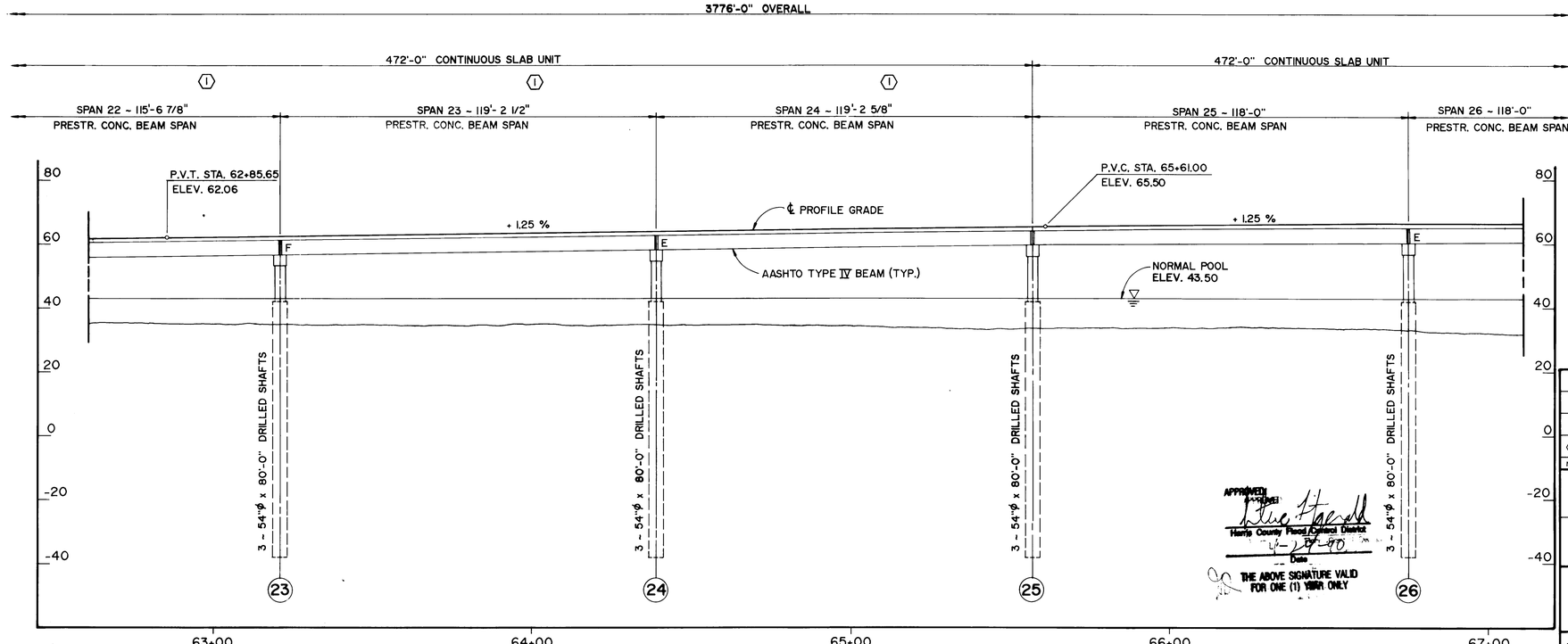

ELEVATION

STATE OF TEXAS
J. ROBERTO ARROYAVE
44865
REGISTERED PROFESSIONAL ENGINEER
4/8/90

APPROVED FOR CITY OF HOUSTON 9
DEPARTMENT OF PUBLIC WORKS:

Water Design — 5-9-90
Water Quality — 5-7-90
Sanitary Sewer — 5/7/90
Assistant Director – Water Div. — 5-17-90
Assistant Director — Director — 5-31-90
Date:
OTHER DEPT'S
Traffic & Transp. — 5/10/90
City Planning Dept. — 5-30-90

APPROVED
Harris County Flood Control District
5-17-90
Date
THE ABOVE SIGNATURE VALID FOR ONE (1) YEAR ONLY

NO.	DATE	REVISION	APPROV.
4			
3			
2			
1	8-11-92	REVISED SPAN LENGTHS	

WEST LAKE HOUSTON PARKWAY
WEST FORK SAN JACINTO RIVER BRIDGE

BRIDGE LAYOUT

7 OF 9

Turner Collie & Braden Inc.
CONSULTING ENGINEERS
TEXAS AUSTIN/DALLAS/HOUSTON/PORT ARTHUR
COLORADO DENVER

Unit ARROYAVE	Scales 1"= 20'-0"	Date FEBRUARY, 1989
Designed DJCC	Checked JRA	Job No.62-68012-001 Contract
Drawn DDH	Approved	Sheet 8 of 41

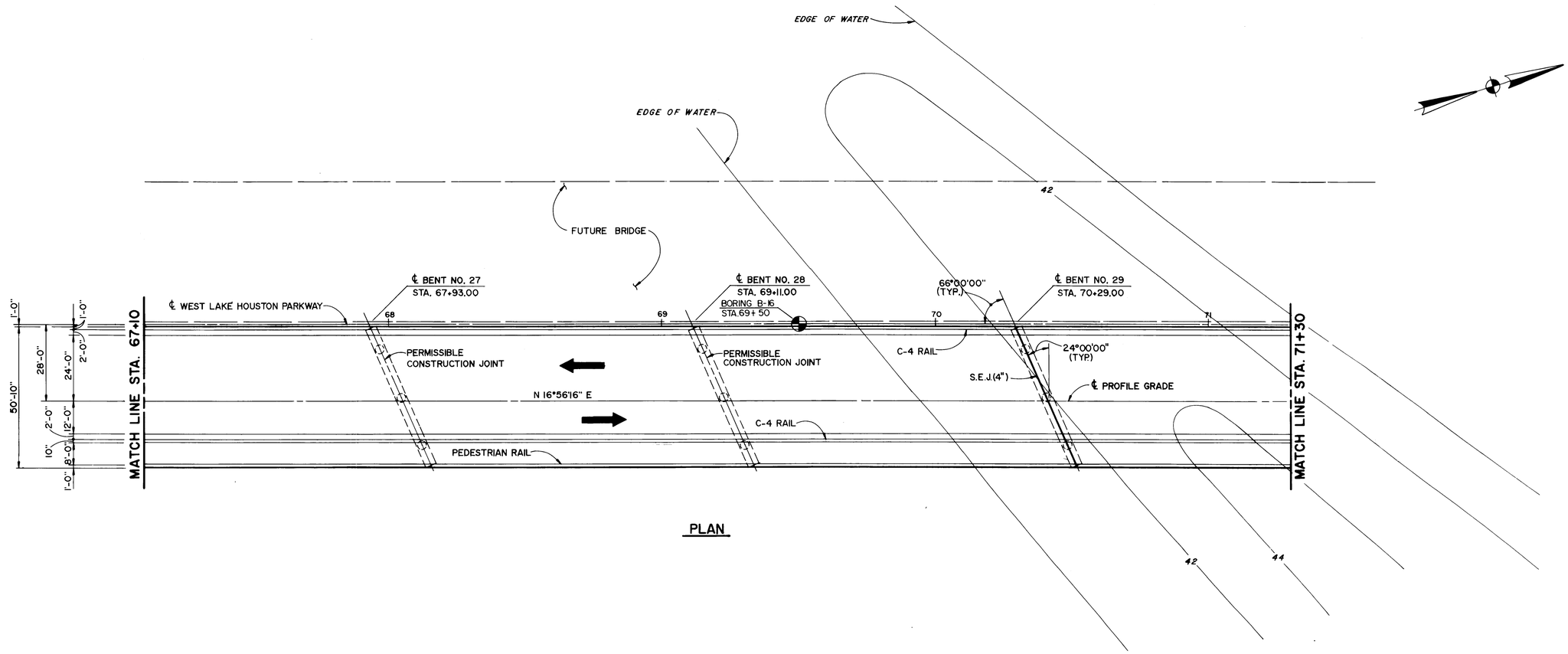

PLAN

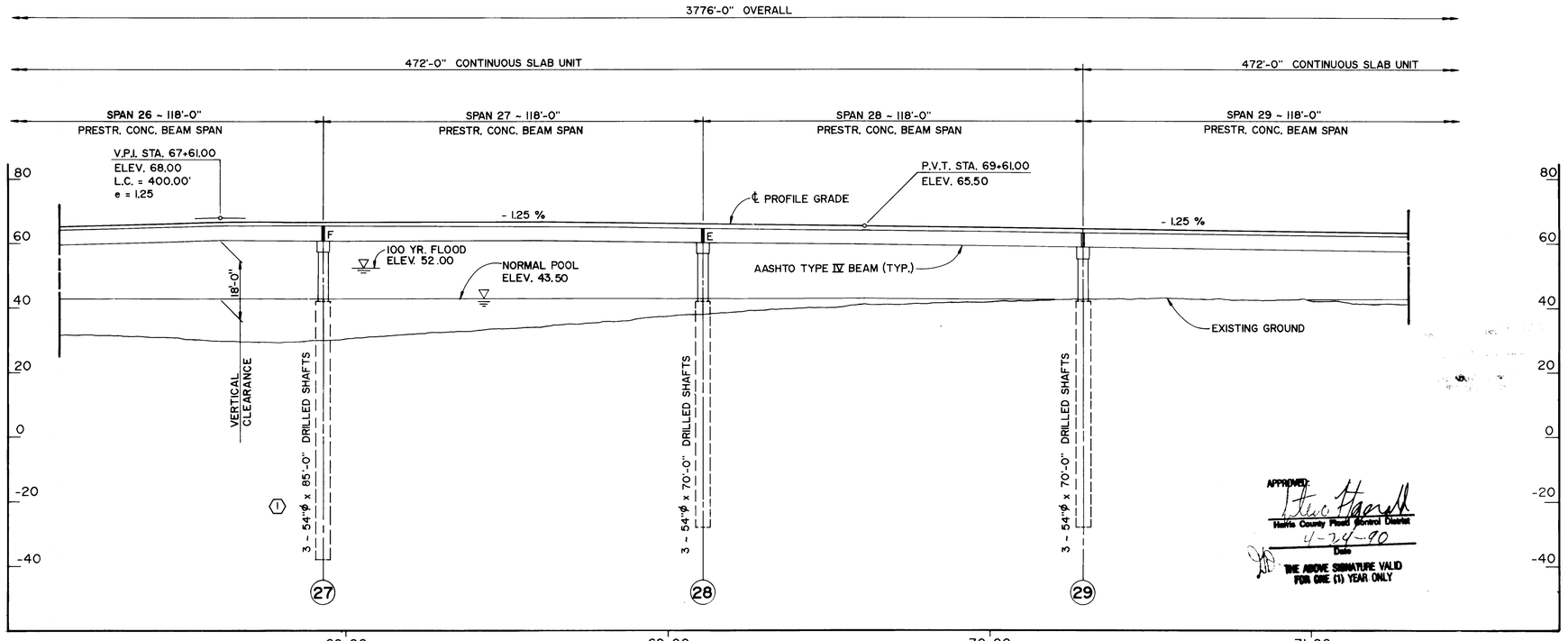

ELEVATION

APPROVED:
Harris County Flood Control District
4-24-90
Date
THE ABOVE SIGNATURE VALID FOR ONE (1) YEAR ONLY

STATE OF TEXAS
J. ROBERTO ARROYAVE
44865
REGISTERED PROFESSIONAL ENGINEER

APPROVED FOR CITY OF HOUSTON 9
DEPARTMENT OF PUBLIC WORKS:

D. Readers 5-9-90 Water Design	Paving
Water Quality	Storm Sewer 5/7/90
Assistant Director – Water Div.	Sanitary Sewer 5/7/90
Bill Deschner 5-17-90 Assistant Director	Director 5-31-90
Date:	

OTHER DEPT'S
Traffic & Transp. 5/10/90 City Planning Dept. 5-30-90

NO.	DATE	REVISION	APPROV.
4			
3			
2			
1	8-11-92	REV. DRILLED SHAFT LENGTH	

WEST LAKE HOUSTON PARKWAY
WEST FORK SAN JACINTO RIVER BRIDGE

BRIDGE LAYOUT

8 OF 9

Turner Collie & Braden Inc.
CONSULTING ENGINEERS
TEXAS AUSTIN/DALLAS/HOUSTON/PORT ARTHUR
COLORADO DENVER

Unit ARROYAVE	Scale: 1" = 20'-0"	Date FEBRUARY, 1989
Designed DJCC	Checked JRA	Job No. 62-68012-001 Contract
Drawn DDH	Approved	Sheet 9 of 41

AF 39185

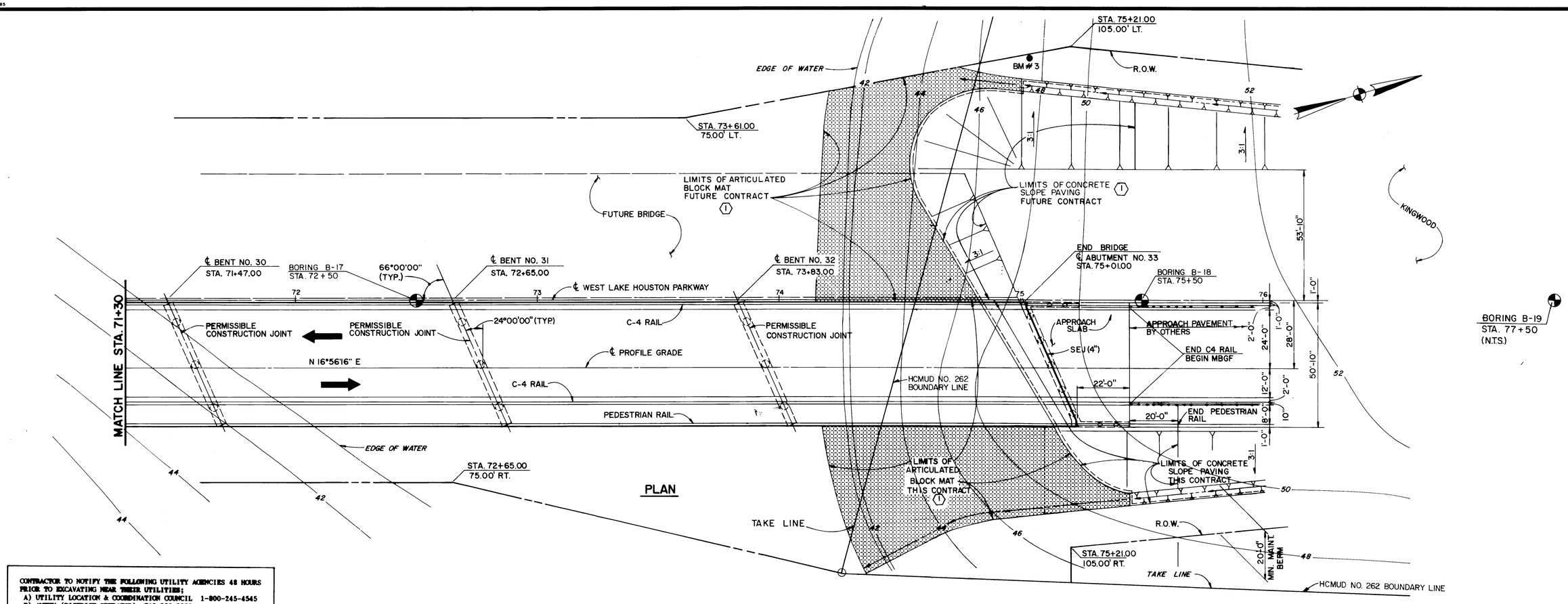

CONTRACTOR TO NOTIFY THE FOLLOWING UTILITY AGENCIES 48 HOURS PRIOR TO EXCAVATING NEAR THEIR UTILITIES;

A) UTILITY LOCATION & COORDINATION COUNCIL 1-800-245-4545
B) ANTEX (DISTRICT OPERATOR) 713-358-2828
C) ENTEX 713-654-5141
D) KINGWOOD CABLEVISION 713-358-2004
E) CENTEL 713-540-4191

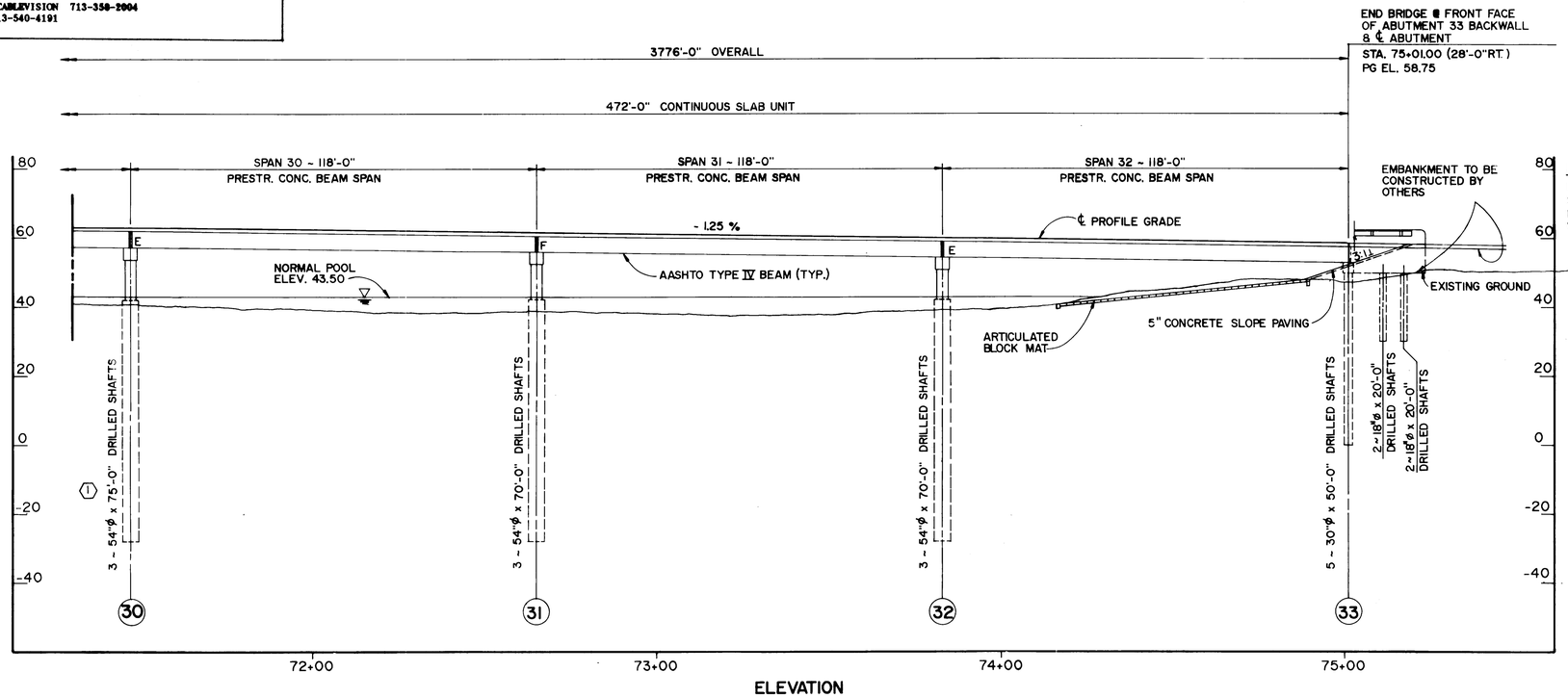

ELEVATION

BENCHMARK DATA

BM # 3: SET ALUMINUM CAP IN CONCRETE STA. 75+02.75, 100.02' LEFT. EL. 48.47 (ALL ELEVATIONS ARE BASED ON NATIONAL GEODETIC VERTICAL DATUM 1964 ADJUSTMENT).

APPROVED:
Harris County Flood Control District
4-24-90
Date
THE ABOVE SIGNATURE VALID FOR ONE (1) YEAR ONLY

STATE OF TEXAS
J. ROBERTO ARROYAVE
44865
REGISTERED
PROFESSIONAL ENGINEER
4/18/90

APPROVED FOR CITY OF HOUSTON 9

DEPARTMENT OF PUBLIC WORKS:

Water Design	5-9-90	Paving	5-7-90
Water Quality			5/11/90
Assistant Director - Water Div.	5-17-90	Sanitary Sewer	
Assistant Director		Director	5-31-90
Date			
OTHER DEPT'S			
Traffic / Transp.	5/10/90	City Planning Dept.	5-7-90

NO.	DATE	REVISION	APPROV.
4			
3			
2			
1	8-11-92	REVISED LIMITS OF SLOPE PAVING & DRILLED SHAFT LENGTH	

WEST LAKE HOUSTON PARKWAY
WEST FORK SAN JACINTO RIVER BRIDGE

BRIDGE LAYOUT

9 OF 9

Turner Collie & Braden Inc.
CONSULTING ENGINEERS
TEXAS AUSTIN/DALLAS/HOUSTON/PORT ARTHUR
COLORADO DENVER

Unit ARROYAVE	Scales 1" = 20'-0"	Date FEBRUARY, 1989
Designed DJCC	Checked JRA	Job No. 62-68012-001 Contract
Drawn DDH	Approved	Sheet 10 of 41

LOG OF BORING B-1

PROJECT: West Lake Houston Parkway Bridge, Lake Houston
SWL No. 88-224
DATE: 6-30-88 TYPE: Wet Rotary LOCATION: Sta. 36 + 50

DEPTH, FEET	SYMBOL	SAMPLES	BLOWS PER 6 IN.	Description	Elevation, Feet	Pocket Pen. Reading, tsf	Moisture Content, %	Dry Density pcf	Liquid Limit	Plastic Limit	Passing #200 Sieve, %	Triaxial: Ult. Princpl. Stress, psi	Triaxial: Lateral Pressure, psi	Triaxial: Shear Strength, tsf
				Surface Elevation: 47.8'										
0				Loose gray and light gray silty fine sand	45									
5			7 7	Very stiff light gray, gray and tan clay with silty sand seams		2.0	16	107	41	13		41.1	0	1.48
			6		40									
10			13	Loose light gray silty sand										
			15 16	- becomes slightly compact	35									
15			10 16		30									
20				Stiff gray clay, with silty clay seams	25	3.5	23	100	50	21		24.6	10	0.53
			6 7	Stiff gray and light gray silty clay, with sand and clay pockets	20	4.0	22	106	27	13		29.4	15	0.52
30				- becomes very stiff		4.5+	19	111	33	16		52.8	5	1.72
					15									
35			40 60/5	Very dense gray silty sand	10									
			16 18	- becomes slightly compact										
40			26 25	- becomes compact	5									
45			50/3 50/	-becomes very dense	0									
50			1.5	Very dense gray silty sand										
			40 50/ 5.5	- becomes dense	-5									
55					-10									
60			11 11	Stiff gray clay		2.0 2.0	29 29	93 95	57 60	21 21		31.9 41.7	5 25	0.97 0.60
					-15									
65				Compact light gray sand	-20									
70			30 35											
75			50/ 5.5 50/ 4.5	- becomes dense	-25									
80			50/3 50/4		-30									
85			50/5 50/ 5.5		-35									
90			50/2 50/ 2.5		-40									
				Boring Terminated at 90 feet	-42									

LOG OF BORING B-2

PROJECT: West Lake Houston Parkway Bridge, Lake Houston
SWL No. 88-224
DATE: 6-30-88 TYPE: Wet Rotary LOCATION: Sta. 38 + 50

DEPTH, FEET	SYMBOL	SAMPLES	BLOWS PER 6 IN.	Description	Elevation, Feet	Pocket Pen. Reading, tsf	Moisture Content, %	Dry Density pcf	Liquid Limit	Plastic Limit	Passing #200 Sieve, %	Triaxial: Ult. Princpl. Stress, psi	Triaxial: Lateral Pressure, psi	Triaxial: Shear Strength, tsf
				Surface Elevation: 45.1'										
0				Compact light gray and tan silty fine sand, with roots							14			
5			22 20		40									
10			22 19		35									
15			14 14	- becomes slightly compact	30									
20				Stiff gray, tan and red-brown clay - slickensided, with calcareous nodules	25	2.8	30	93	65	27		36.7	15	0.78
25			10 12	Firm gray and light gray silty clay with clay pockets, slickensided	20	1.5	19	108	27	12		20.4	10	0.38
30				Slightly compact tan silty fine sand	15									
35			13 16		10									
40			20 24	- becomes compact	5									
45			50/3 50/3	- becomes dense	0									
50			13 13	- becomes slightly compact	-5									
			10 13	Slightly compact tan silty fine sand - with clay layer	-10									
55														
60			7 9	Stiff gray sandy clay	-15	1.25	18	112	28	12		30.3	10	0.73
65				- with fine sand pockets	-20	1.0	17	114	23	13		38.9	25	0.5
70			35 34	Compact light gray silty fine sand										
75			50 50/4	- becomes dense	-25									
80			50/4 50/3		-30									
85			50/5 50		-35									
90			50/3 50/ 3.5		-40									
					-45									

LOG OF BORING B-3

PROJECT: West Lake Houston Parkway Bridge, Lake Houston
SWL No. 88-224
DATE: 7-8-88 TYPE: Wet Rotary LOCATION: Sta. 40 + 50

DEPTH, FEET	SYMBOL	SAMPLES	BLOWS PER 6 IN.	Description	Elevation, Feet	Pocket Pen. Reading, tsf	Moisture Content, %	Dry Density pcf	Liquid Limit	Plastic Limit	Passing #200 Sieve, %	Triaxial: Ult. Princpl. Stress, psi	Triaxial: Lateral Pressure, psi	Triaxial: Shear Strength, tsf
				Surface Elevation: 45.0'										
0				Loose gray sand, with roots										
5			6 6		40									
				Soft gray and tan silty clay		0.25	16	114	24	17		3.8	0	0.14
10			10 12	Slightly compact light gray silty sand	35									
15			12 11		30									
20			17 14	Stiff gray clay	25									
			8 16	Stiff gray silty clay	20	1.3 2.0 2.5	19	109	25	17		13.8	0	0.48
30			12 11	- becomes very stiff	15	4.25	22	106	43	18		50.4	0	1.82
35				-becomes stiff	10	0.8 0.5 0.5 2.0 1.0	29 25	95 102	36 27	16 20		37.1 16.5	20 5	0.62 0.42
40			40 50/ 5.5	Dense light gray sand	5									
45			23 42	- becomes compact	0									
50			15 10	Gray silty sand w/soft clay layer	-5									
				Gray silty sand w/soft clay layer		0.5	24	102	27	12		4.3	0	0.16
55			10 11	Slightly compact light gray coarse sand	-10									
60				Firm gray clay		1.0	35	87	66	24		11.0	0	0.40
				- becomes stiff	-15	1.0	35	87	65	27		47.4	30	0.63
65				Dense to very dense light gray sand	-20									
70			50/ 4.5 50/4		-25									
75			50/4 50/ 3.5		-30									
80			50/3 50/ 3.5		-35									
85			50/ 2.5 50/3		-40									
90			50/3 50/ 0.5		-45									
				Boring Terminated at 90 feet										

LOG OF BORING B-4

PROJECT: West Lake Houston Parkway Bridge, Lake Houston
SWL No. 88-224
DATE: 7-10-88 TYPE: Wet Rotary LOCATION: Sta. 42 + 50

DEPTH, FEET	SYMBOL	SAMPLES	BLOWS PER 6 IN.	Description	Elevation, Feet	Pocket Pen. Reading, tsf	Moisture Content, %	Dry Density pcf	Liquid Limit	Plastic Limit	Passing #200 Sieve, %	Triaxial: Ult. Princpl. Stress, psi	Triaxial: Lateral Pressure, psi	Triaxial: Shear Strength, tsf
				Surface Elevation: 46.7'										
0				Loose gray silty fine sand, with roots	45									
5			5 5											
			22 20	- becomes compact	40									
10					35									
15			20 20		30									
20			10 12	Very stiff gray and tan silty clay	25	3.3	21	105	47	19		52.4	15	1.35
				- color change to gray	20	2.0	20	108	46	17		40.8	5	1.29
25														
30			10 12		15									
35				- becomes firm and color change gray and tan	10	0.8	24	99	36	18		10.7	0	0.39
40			45 50	Dense light gray sand	5									
45			50 50/5		0									
50			50/3 50/1	- becomes very dense	-5									
				Very dense light gray sand										
55			50/4 50/ 2.5		-10									
60			9 10	Stiff light gray clay - with sand layer at 60 feet	-15	0.8	18	113	22	19		13.8	0	0.49
65				Dense light gray sand	-20									
70			40 50											
75			30 35	- becomes compact	-25									
80			50 50/5	- becomes dense	-30									
85			50/ 3.5 50/4		-35									
90			50/ 3.5 50/ 2.5		-40									
				Boring Terminated at 90 feet	-42									

Prepared by
Southwestern Laboratories
Geotechnical Engineering Division
Houston, Texas

NO.	DATE	REVISION	APPROV.
4			
3			
2			
1			

WEST LAKE HOUSTON PARKWAY
WEST FORK SAN JACINTO RIVER BRIDGE

BORING LOG INFORMATION

1 OF 5

Turner Collie & Braden Inc.
ENGINEERS • PLANNERS

Unit ARROYAVE	Scale: N.T.S.	Date NOVEMBER, 1989
Designed	Checked JRA	Job No. 62-68012-001 Contract
Drawn	Approved	Sheet 11 of 41

CSS115

LOG OF BORING B-5

PROJECT: West Lake Houston Parkway Bridge, Lake Houston
SWL No. 88-224
DATE: 7-13-88 TYPE: Wet Rotary LOCATION: Sta. 44 + 50

DEPTH, FEET	SAMPLES BLOWS PER 6 IN.	Description	Elevation, Feet	Pocket Pen Reading, tsf	Moisture Content, %	Dry Density pcf	Liquid Limit	Plastic Limit	Passing #200 Sieve, %	Triaxial Ult. Princip. Stress, psi	Triaxial Lateral Pressure, psi	Triaxial Shear Strength, tsf
0		Surface Elevation: 46.1'										
		Light gray silty fine sand, with roots										
5	7 8	light gray and brown silty sand with soft clay seams	40	0.3	19	114	20	20		6.3	0	0.23
10	12 16	Slightly compact light gray sand	35									
15	15 23		30									
20	17 21	Very stiff gray clay, slickensided	25	4.0	29	97	58	23		52.5	20	1.17
25	10 12	Stiff gray silty clay with silt pockets	20	2.5	20	109	49	16		19.7	5	0.53
30		Dense light gray sand	15									
35	50/5 50		10									
40	21 17	- becomes compact	5									
45	27 30		0									
50	23 21	Compact light gray sand	-5									
55	50/2 50/2	- becomes very dense	-10									
60	50/3 50/ 3.5	- becomes dense	-15									
65	50/4 50/3		-20									
70	20 13	- becomes slightly compact	-25									
75	12 12	Stiff gray clay	-30	1.0	44	75	72	25		17.9	0	0.65
80	12 15	Slightly compact light gray sand	-35									
85	10 13	- with clay layer	-40									
90	30 35	- becomes compact	-44									
		Boring Terminated at 90 feet										

LOG OF BORING B-6

PROJECT: West Lake Houston Parkway Bridge, Lake Houston
SWL No. 88-224
DATE: 7-15-88 TYPE: Wet Rotary LOCATION: Sta. 46 + 50

DEPTH, FEET	SAMPLES BLOWS PER 6 IN.	Description	Elevation, Feet	Pocket Pen Reading, tsf	Moisture Content, %	Dry Density pcf	Liquid Limit	Plastic Limit	Passing #200 Sieve, %	Triaxial Ult. Princip. Stress, psi	Triaxial Lateral Pressure, psi	Triaxial Shear Strength, tsf
0		Surface Elevation: 46.5'										
	10 11	Slightly compact gray silty fine sand	40									
5												
10	30 32	- becomes compact	35									
15	20 23		30									
20	10 12	Stiff red-brown, tan and gray clay, slickensided		4.5	30	95	54	22		40.3	20	1.23
		- becomes very stiff	25	3.5	30	96	58	23		37.9	5	1.18
25		- becomes stiff		2.3	30	94	58	24		33.2	10	0.84
30	15 20	Slightly compact light gray sand	20									
35	19 28	- becomes compact	15									
40	20 25		10									
45	25 33		5									
50		Compact light gray sand	0									
55	50/4 50/3	- becomes dense	-5									
60	11 12	Stiff gray clay	-10									
		- becomes slickensided	-15	2.3	31	91	67	26		34.9	5	1.08
65		- becomes firm	-20	1.8	36	86	70	26		32.1	20	0.44
70	45 50	Dense tan sand	-25									
75	50/4 50/3		-30									
80	50/5 50/4		-35									
85	50 45		-40									
90	40 30	- becomes compact	-43									
		Boring Terminated at 90 feet										

LOG OF BORING B-7

PROJECT: West Lake Houston Parkway Bridge, Lake Houston
SWL No. 88-224
DATE: 7-18-88 TYPE: Wet Rotary LOCATION: Sta. 48 + 50

DEPTH, FEET	SAMPLES BLOWS PER 6 IN.	Description	Elevation, Feet	Pocket Pen. Reading, tsf	Moisture Content, %	Dry Density pcf	Liquid Limit	Plastic Limit	Passing #200 Sieve, %	Triaxial Ult. Princip. Stress, psi	Triaxial Lateral Pressure, psi	Triaxial Shear Strength, tsf
0		Surface Elevation: 47.0'										
		Loose tan silty fine sand										
5		Very stiff light gray and red-brown sandy clay	40	4.0	19	111	49	16		49.3	0	1.78
10	25 30	Compact light gray sand	35									
15	35 45	- becomes dense	30									
20	12 13	Stiff brown, tan and gray clay, slickensided	25	3.3	35	90	65	25		25.0	5	0.72
		Stiff gray silty clay		2.3	28	98	47	24		22.6	0	0.82
25			20									
30	6 13											
35	48 50/5	Dense tan sand	15									
40	11 27	- becomes slightly compact	10									
45	35 34	- becomes compact	5									
50	33 33	Compact tan sand	0									
55	50/5 50/ 2.5	- becomes dense	-5									
60	50/4 50/3		-10									
65	8 12	Stiff clay layer	-15									
		Very dense tan sand	-20									
70	50/3 50/2		-25									
75	50/2 50/ 2.5		-30									
80	50/ 2.5 50/2		-35									
85	50/2 50/2		-40									
90	50/ 2.5 50/2		-43									
		Boring Terminated at 90 feet										

LOG OF BORING B-8

PROJECT: West Lake Houston Parkway Bridge, Lake Houston
SWL No. 88-224
DATE: 7-19-88 TYPE: Wet Rotary LOCATION: Sta. 50 + 50

DEPTH, FEET	SAMPLES BLOWS PER 6 IN.	Description	Elevation, Feet	Pocket Pen. Reading, tsf	Moisture Content, %	Dry Density pcf	Liquid Limit	Plastic Limit	Passing #200 Sieve, %	Triaxial Ult. Princip. Stress, psi	Triaxial Lateral Pressure, psi	Triaxial Shear Strength, tsf
0		Surface Elevation: 45.9'										
	11 13	Slightly compact light gray silty sand	40									
5												
10	15 12		35									
15	12 7		30									
20	8 9	Very stiff gray silty clay	25	2.8	19	110	33	14		40.4	0	1.46
25			20	4.3	19	110	34	14		49.3	20	1.06
				3.0	18	111	36	16		38.3	10	1.02
30	50/ 5.5 50/ 4.5	Dense tan sand	15									
35	25 30	- becomes compact	10									
40	50/ 1.5 50/2	- becomes very dense	5									
45	50/3 50/3	- becomes dense	0									
50	50/ 3.5 50/3	Dense tan sand	-5									
55	50/2 50/2	- becomes very dense	-10									
60	50/3 50/ 3.5		-15									
65	50/5 50/4	- becomes dense	-20									
70	50 50/5		-25									
75	50/3 50/ 2.5		-30									
80	50/ 3.5 50/4		-35									
85	50/4 50/4		-40									
90	50/ 5.5 50/5		-44									
		Boring Terminated at 90 feet										

Prepared by
Southwestern Laboratories
Geotechnical Engineering Division
Houston, Texas

NO.	DATE	REVISION	APPROV.
4			
3			
2			
1			

WEST LAKE HOUSTON PARKWAY
WEST FORK SAN JACINTO RIVER BRIDGE

BORING LOG INFORMATION

2 OF 5

Turner Collie & Braden Inc.
ENGINEERS • PLANNERS

Unit ARROYAVE	Scale: N.T.S.	Date NOVEMBER, 1989
Designed	Checked JRA	Job No.62-68012-001 Contract
Drawn	Approved	Sheet 12 of 41

311803

LOG OF BORING B-9

PROJECT: West Lake Houston Parkway Bridge, Lake Houston
SWL No. 88-224
DATE: 7-22-88 TYPE: Wet Rotary LOCATION: Sta. 52 + 50

DEPTH, FEET	SYMBOL	SAMPLES BLOWS PER 6 IN.	Description	Elevation, feet	Pocket Pen. Reading, tsf	Moisture Content, %	Dry Density pcf	Liquid Limit	Plastic Limit	Passing #200 Sieve, %	Triaxial: Ult. Princpl. Stress, psi	Triaxial: Lateral Pressure, psi	Triaxial: Shear Strength, tsf
0			Surface Elevation: 44.9'										
		5	Loose light gray silty fine sand										
5		10		40									
		6	Firm light gray and tan sandy clay, with silty sand layers and seams		0.8	16	113	25	15		10.7	0	0.38
10		7		35									
		31	Compact light gray sand										
15		31		30									
		6	Stiff brown and gray clay, slickensided		2.0	34	89	68	28		16.0	0	0.58
20		5		25									
					2.0	20	106	49	17		36.5	20	0.59
25			Very stiff gray sandy clay	20	4.3	20	111	31	18		38.9	10	1.04
		33	Dense tan silty fine sand										
30		50/3		15									
		38											
35		41		10									
		50/4											
40		50/ 4.5		5									
		50/ 3.5											
45		50/ 2.5		0									
		50/3	-becomes very dense										
50		50/ 1.5		-5									
			Very dense tan silty fine sand										
		50/ 3.5	-becomes dense										
55		50/ 4.5		-10									
		12	Clay layer										
60		15		-15									
		50	Dense light gray sand										
65		50/5		-20									
		50/3	-becomes very dense										
70		50/2		-25									
		50/4	-becomes dense										
75		50/ 4.5		-30									
		50											
80		50/4		-35									
		50/ 5.5											
85		50/5		-40									
90		16 16	Stiff gray clay	-45									
			Boring Terminated at 90 feet										

LOG OF BORING B-10

PROJECT: West Lake Houston Parkway Bridge, Lake Houston
SWL No. 88-224
DATE: 7-25-88 TYPE: Wet Rotary LOCATION: Sta. 54 + 50

DEPTH, FEET	SYMBOL	SAMPLES BLOWS PER 6 IN.	Description	Elevation, feet	Pocket Pen. Reading, tsf	Moisture Content, %	Dry Density pcf	Liquid Limit	Plastic Limit	Passing #200 Sieve, %	Triaxial: Ult. Princpl. Stress, psi	Triaxial: Lateral Pressure, psi	Triaxial: Shear Strength, tsf
0			Surface Elevation: 45.4'										
		6	Loose gray silty fine sand, with roots										
5		6		40									
		14	Gray sandy clay										
10		12		35									
		10	Slightly compact sand										
15		10		30									
		7	Very stiff bluish gray and brown clay		4.0	27	100	52	22		48.8	5	1.58
20		8		25									
			- color change to gray		2.8	3.0	97	51	19		52.4	20	1.17
25				20									
		8	Compact light gray silty fine sand										
30		42		15									
		35											
35		40		10									
		34											
40		37		5									
		50	- becomes dense										
45		50/ 5.5		0									
		50/5											
50		50/ 5.5		-5									
			Dense light gray silty fine sand										
55		50/5 50/4		-10									
		12	Stiff clay										
60		12		-15									
		50	Dense tan sand										
65		50		-20									
		50/											
70		5.5 50/ 2.5		-25									
		50/4											
75		50/3		-30									
		50/5											
80		50/ 3.5		-35									
		50/											
85		5.5 50/ 4.5		-40									
90		12 14	Stiff gray clay	-45									
			Boring Terminated at 90 feet										

LOG OF BORING B-11

PROJECT: West Lake Houston Parkway Bridge, Lake Houston
SWL No. 88-224
DATE: 7-26-88 TYPE: Wet Rotary LOCATION: Sta. 56 + 50

DEPTH, FEET	SYMBOL	SAMPLES BLOWS PER 6 IN.	Description	Elevation, feet	Pocket Pen. Reading, tsf	Moisture Content, %	Dry Density pcf	Liquid Limit	Plastic Limit	Passing #200 Sieve, %	Triaxial: Ult. Princpl. Stress, psi	Triaxial: Lateral Pressure, psi	Triaxial: Shear Strength, tsf
0			Surface Elevation: 43.0'										
			Loose light gray silty fine sand	40									
5		5 6	Firm light gray and tan clay										
		15	Slightly compact light gray sand	35									
10		15											
		10	- with gravel	30									
15		15											
		10	Stiff light gray clayey silty sand, with clay layers		1.0	17	116	25	16		19.6	5	0.51
20		11		25									
			Stiff gray silty clay	20	2.0	18		48	15				
25			Stiff light gray clayey sand		2.0	18	113	24	20		34.6	15	0.72
		24	Compact light gray silty fine sand	15									
30		29											
		30		10									
35		40											
		45	- becomes dense	5									
40		50											
		50/5		0									
45		50/ 4.5											
		50/4		-5									
50		40	Dense light gray silty fine sand										
		50/ 2.5		-10									
55		50/5											
		12	Stiff clay	-15									
60		12											
		50	Dense light gray sand	-20									
65		50/5											
		50/5		-25									
70		50/ 4.5											
		50/ 3.5		-30									
75		50/3											
		50/3		-35									
80		50/1											
		50/2		-40									
85		50/3											
		12	-becomes slightly compact	-45									
90		14		-47									
			Boring Terminated at 90 feet										

LOG OF BORING B-12

PROJECT: West Lake Houston Parkway Bridge, Lake Houston
SWL No. 88-224
DATE: 7-29-88 TYPE: Wet Rotary LOCATION: Sta. 58 + 50

DEPTH, FEET	SYMBOL	SAMPLES BLOWS PER 6 IN.	Description	Elevation, feet	Pocket Pen. Reading, tsf	Moisture Content, %	Dry Density pcf	Liquid Limit	Plastic Limit	Passing #200 Sieve, %	Triaxial: Ult. Princpl. Stress, psi	Triaxial: Lateral Pressure, psi	Triaxial: Shear Strength, tsf
0			Surface Elevation: 44.2'										
			Loose light gray sand										
5		7 6		40									
		5											
10		6		35									
		6											
15		6		30									
		SPT 7 BPF	- becomes silty	25									
20		7 8											
25				20									
		8											
30		8		15									
		9	- becomes slightly compact										
35		11		10									
		SPT 23 BPF											
40				5									
		50	- becomes dense										
45		50/ 5.5		0									
		50/5											
50		50/ 2.5		-5									
			Dense light gray sand										
55		50/4 50/3		-10									
		SPT 46 BPF	-becomes coarse										
60				-15									
		50/5											
65		50/4		-20									
		50/ 4.5											
70		50/3		-25									
		50/ 2.5											
75		50/2		-30									
		SPT 44 BPF											
80				-35									
		50/ 3.5											
85		50/3		-40									
		50/2											
90		50/ 1.5		-46									
			Boring Terminated at 90 feet										

Prepared by
Southwestern Laboratories
Geotechnical Engineering Division
Houston, Texas

NO.	DATE	REVISION	APPROV.
4			
3			
2			
1			

WEST LAKE HOUSTON PARKWAY
WEST FORK SAN JACINTO RIVER BRIDGE

BORING LOG INFORMATION

3 OF 5

Turner Collie & Braden Inc.
ENGINEERS • PLANNERS

Unit ARROYAVE	Scale: N.T.S.	Date NOVEMBER, 1989
Designed	Checked JRA	Job No. 62-68012-001 Contract
Drawn	Approved	Sheet 13 of 41

LOG OF BORING B-13

PROJECT: West Lake Houston Parkway Bridge, Lake Houston
SWL No. 88-224
DATE: 7-27-88 TYPE: Wet Rotary LOCATION: Sta. 60 + 50

DEPTH, FEET	SYMBOL	SAMPLES BLOWS PER 6 IN.	Description	Elevation, Feet	Pocket Pen. Reading, tsf	Moisture Content, %	Dry Density pcf	Liquid Limit	Plastic Limit	Passing #200 Sieve, %	Triaxial Ult. Princpl. Stress, psi	Triaxial Lateral Pressure, psi	Triaxial Shear Strength, tsf
			Surface Elevation: 39.6'										
0		4 2	Very loose light gray sand	35									
10		2 1		30									
15		9 7	- becomes loose	25									
20		13 10	- becomes slightly compact	20									
25		13 18		15									
30		8 20	- with clay layer at 29 to 29.5 feet	10									
35		28 50/5	- becomes dense	5									
40		45 50		0									
45		50/6 50/5		-5									
50		40 20	- becomes compact	-10									
			Compact light gray sand										
55		50/ 3.5 50/3	- becomes dense	-15									
60		50/2 50/ 2.5		-20									
65		50/5 50/4		-25									
70		50/4 50/ 3.5		-30									
75		50/ 2.5 50/2	- becomes very dense	-35									
80		50/3 50/ 0.5		-40									
85		50/ 2.5 50/2		-45									
90		50/ 3.5 50/3	Boring Terminated at 90 feet	-50									

LOG OF BORING B-14

PROJECT: West Lake Houston Parkway Bridge, Lake Houston
SWL No. 88-224
DATE: 8-17-88 TYPE: Wet Rotary LOCATION: Sta. 63 + 50

DEPTH, FEET	SYMBOL	SAMPLES BLOWS PER 6 IN.	Description	Elevation, Feet	Pocket Pen. Reading, tsf	Moisture Content, %	Dry Density pcf	Liquid Limit	Plastic Limit	Passing #200 Sieve, %	Triaxial Ult. Princpl. Stress, psi	Triaxial Lateral Pressure, psi	Triaxial Shear Strength, tsf
			Mudline Elevation: 34.9'										
0		2 2	Very loose tan sand	30									
5		3 4		25									
10		5 5		20									
15		7 12	- becomes loose	15									
20		8 7		10									
25		10 12	- becomes slightly compact	5									
30		14 17		0									
35		20 24	- becomes compact	-5									
40		24 29		-10									
45		30 29		-15									
50		25 28	Compact tan sand	-20									
55		32 35		-25									
60		37 38		-30									
65		40 43	- becomes dense	-35									
70		45 50		-40									
75		50/5 50/5		-45									
80		50/5 50/4		-50									
85		50/4 50/4		-55									
90		50/4 50/3	Boring Terminated at 90 feet Mudline approximately 9.5 feet below water level of lake.										

LOG OF BORING B-15

PROJECT: West Lake Houston Parkway Bridge, Lake Houston
SWL No. 88-224
DATE: 8-16-88 TYPE: Wet Rotary LOCATION: Sta. 66 + 50

DEPTH, FEET	SYMBOL	SAMPLES BLOWS PER 6 IN.	Description	Elevation, Feet	Pocket Pen. Reading, tsf	Moisture Content, %	Dry Density pcf	Liquid Limit	Plastic Limit	Passing #200 Sieve, %	Triaxial Ult. Princpl. Stress, psi	Triaxial Lateral Pressure, psi	Triaxial Shear Strength, tsf
			Mudline Elevation: 33.6'										
0		1 2	Very loose tan sand	30									
5		3 3		25									
10		5 4		20									
15		10 15	- becomes slightly compact	15									
20		8 13		10									
25		23 27	- becomes compact	5									
30		33 42		0									
35		23 32		-5									
40		48 50/5	- becomes dense	-10									
45		13 16	- becomes slightly compact, with thin layers of gray clay	-15									
50		16 22	Slightly compact tan sand	-20									
55		18 31	- becomes compact	-25									
60		40 42		-30									
65		48 50/5	- becomes dense	-35									
70		30 38	- becomes compact	-40									
75		50/5 50/4	- becomes dense	-45									
80		50/5 50/3		-50									
85		50/3 50/3		-55									
90			Boring Terminated at 90 feet Mudline approximately 8 feet below water leval of lake.	-56									

LOG OF BORING B-16

PROJECT: West Lake Houston Parkway Bridge, Lake Houston
SWL No. 88-224
DATE: 8-9-88 TYPE: Wet Rotary LOCATION: Sta. 69 + 50

DEPTH, FEET	SYMBOL	SAMPLES BLOWS PER 6 IN.	Description	Elevation, Feet	Pocket Pen. Reading, tsf	Moisture Content, %	Dry Density pcf	Liquid Limit	Plastic Limit	Passing #200 Sieve, %	Triaxial Ult. Princpl. Stress, psi	Triaxial Lateral Pressure, psi	Triaxial Shear Strength, tsf
			Surface Elevation: 40.2'										
0		1/ 1/2"	Very loose tan fine sand	35									
5		1 1	- becomes slightly clayey	30									
10		3 2		25									
15		6 7	- becomes loose	20									
20		12 21	- becomes slightly compact	15									
25		14 28		10									
30		18 13		5									
35		10 9		0									
40		11 13		-5									
45		40 30	- becomes compact	-10									
50		42 48	- becomes dense Dense tan fine sand	-15									
55		50 50/2		-20									
60		50/5 50/4		-25									
65		50/4 50/4		-30									
70		50/4 50/5		-35									
75		50 50/5		-40									
80		50/4 50/4		-45									
85		50/3 50/2	- becomes very dense	-50									
90		50/2 50/2	Boring Terminated at 90 feet										

Prepared by
Southwestern Laboratories
Geotechnical Engineering Division
Houston, Texas

NO.	DATE	REVISION	APPROV.
4			
3			
2			
1			

WEST LAKE HOUSTON PARKWAY
WEST FORK SAN JACINTO RIVER BRIDGE

BORING LOG INFORMATION

4 OF 5

Turner Collie & Braden Inc.
ENGINEERS • PLANNERS

Unit ARROYAVE	Scale: N.T.S.	Date NOVEMBER, 1989
Designed	Checked JRA	Job No. 62-68012-001 Contract
Drawn	Approved	Sheet 14 of 41

311803

LOG OF BORING B-17

PROJECT: West Lake Houston Parkway Bridge, Lake Houston
Project No. 88-224
DATE: 8-11-88 TYPE: Wet Rotary LOCATION: Sta. 72 + 50

DEPTH, FEET	BLOWS PER 6 IN.	Description	Elevation, feet	Pocket Pen. Reading, tsf	Moisture Content, %	Dry Density pcf	Liquid Limit	Plastic Limit	Passing #200 Sieve, %	Ult. Princpl. Stress, psi	Lateral Pressure, psi	Shear Strength, tsf
0		Mudline Elevation: 39.2'										
	4 4	Very loose tan fine sand	35									
5	3 4		30									
10	10 10	- becomes slightly compact	25									
15	12 12		20									
20	10 15		15									
25	15 18		10									
30	18 25	- becomes compact	5									
35	22 24		0									
40	50/5 50/5	- becomes dense	-5									
45	50/5 50/5		-10									
50	50/4 50/5	Dense tan fine sand	-15									
55	50/4 50/3		-20									
60	40 46		-25									
65	50/5 50/4		-30									
70	25 25	- becomes compact	-35									
75	49 50/5	- becomes dense	-40									
80	50/5 50/5		-45									
85	50/4 50/4		-51									
90		Boring Terminated at 90 feet										
		Mudline approximately 3 feet below water level of lake.										

LOG OF BORING B-18

PROJECT: West Lake Houston Parkway Bridge, Lake Houston
SWL No. 88-224
DATE: 7-22-88 TYPE: Wet Rotary LOCATION: Sta. 75 + 50

DEPTH, FEET	BLOWS PER 6 IN.	Description	Elevation, feet	Pocket Pen. Reading, tsf	Moisture Content, %	Dry Density pcf	Liquid Limit	Plastic Limit	Passing #200 Sieve, %	Ult. Princpl. Stress, psi	Lateral Pressure, psi	Shear Strength, tsf
0		Surface Elevation: 50.4'										
	2 2	Very loose tan sand	45									
5	5 9		40									
10	9 9		35									
15	12 13	- becomes slightly compact	30									
20	12 15		25									
25	17 12		20									
30	21 13		15									
35	21 23	- becomes compact	10									
40	45 50	- becomes dense	5									
45	48 51		0									
50	38 47	Dense tan sand	-5									
55	42 50		-10									
60	50/4 50/3		-15									
65	50/4 50/4		-20									
70	50/3 50/2		-25									
75	27 42	- becomes compact	-30									
80	26 45		-35									
85	50/4 50/3	- becomes dense	-40									
90	50/ 2.5 50/2	Boring Terminated at 90 feet										

LOG OF BORING B-19

PROJECT: West Lake Houston Parkway Bridge, Lake Houston
Project No. 88-224
DATE: 7-20-88 TYPE: Wet Rotray LOCATION: Sta. 77 + 50

DEPTH, FEET	BLOWS PER 6 IN.	Description	Elevation, feet	Pocket Pen. Reading, tsf	Moisture Content, %	Dry Density pcf	Liquid Limit	Plastic Limit	Passing #200 Sieve, %	Ult. Princpl. Stress, psi	Lateral Pressure, psi	Shear Strength, tsf
0		Surface Elevation: 55.5'										
	2 1	Very loose tan sand	50									
5	5 3		45									
10	8 8	- becomes loose	40									
15	4 5	- becomes very loose	35									
20	12 18	- becomes slightly compact	30									
25	23 28	- becomes compact	25									
30	18 38		20									
35	21 42		15									
40	23 40	- with pea gravel	10									
45	47 50	- becomes dense	5									
50	50 50/5	Dense tan sand	0									
55	35 50		-5									
60	50 50/4		-10									
65	48 50/5	- color change to gray	-15									
70	50/2 50/2	- becomes very dense	-20									
75	50/4 50/4	- becomes dense	-25									
80	50 50/3		-30									
85	50/3 50/3	- becomes very dense	-35									
90	50/3 50/3	Boring Terminated at 90 feet										

Prepared by
Southwestern Laboratories
Geotechnical Engineering Division
Houston, Texas

NO.	DATE	REVISION	APPROV.
4			
3			
2			
1			

WEST LAKE HOUSTON PARKWAY
WEST FORK SAN JACINTO RIVER BRIDGE

BORING LOG INFORMATION

5 OF 5

Turner Collie & Braden Inc.
ENGINEERS • PLANNERS

Unit ARROYAVE	Scale: N.T.S.	Date NOVEMBER, 1989
Designed	Checked JRA	Job No. 62-68012-001 Contract
Drawn	Approved	Sheet 15 of 41

311863

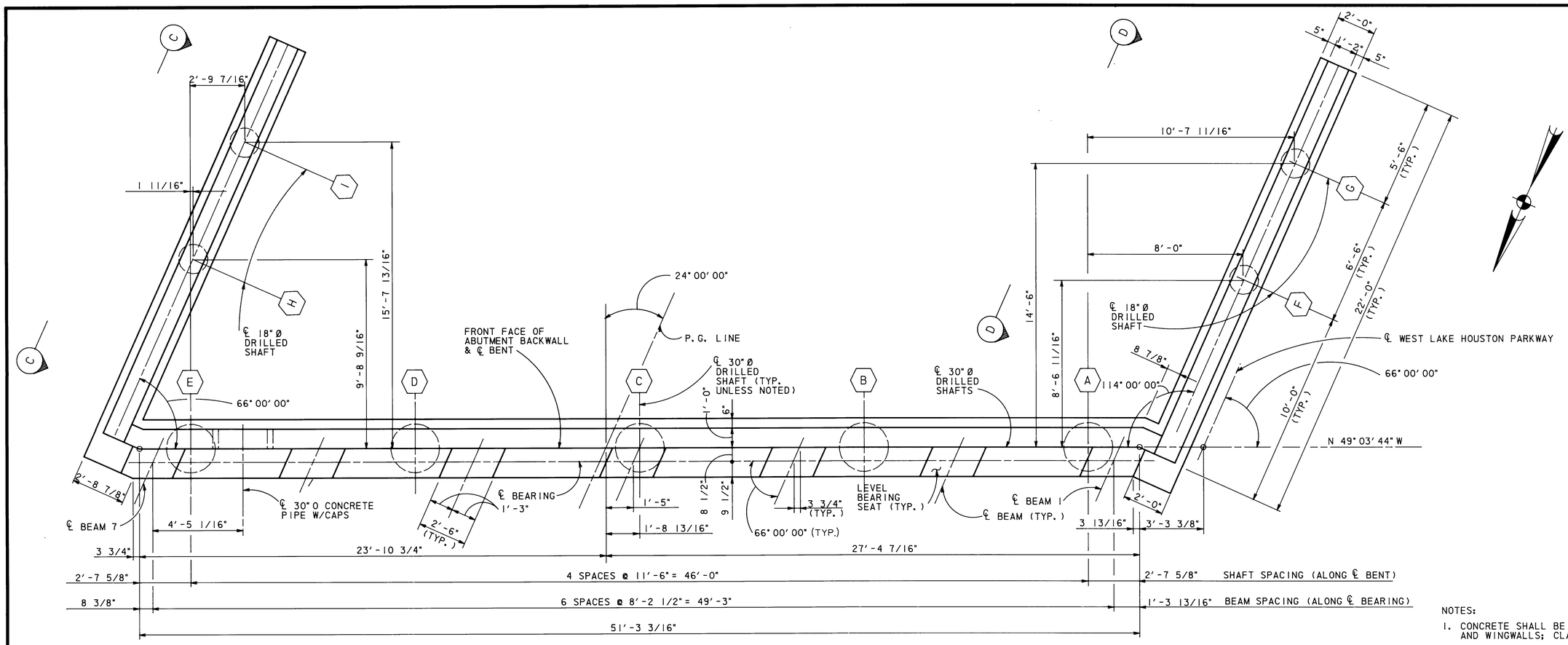

PLAN
SCALE: 3/8" = 1'-0"

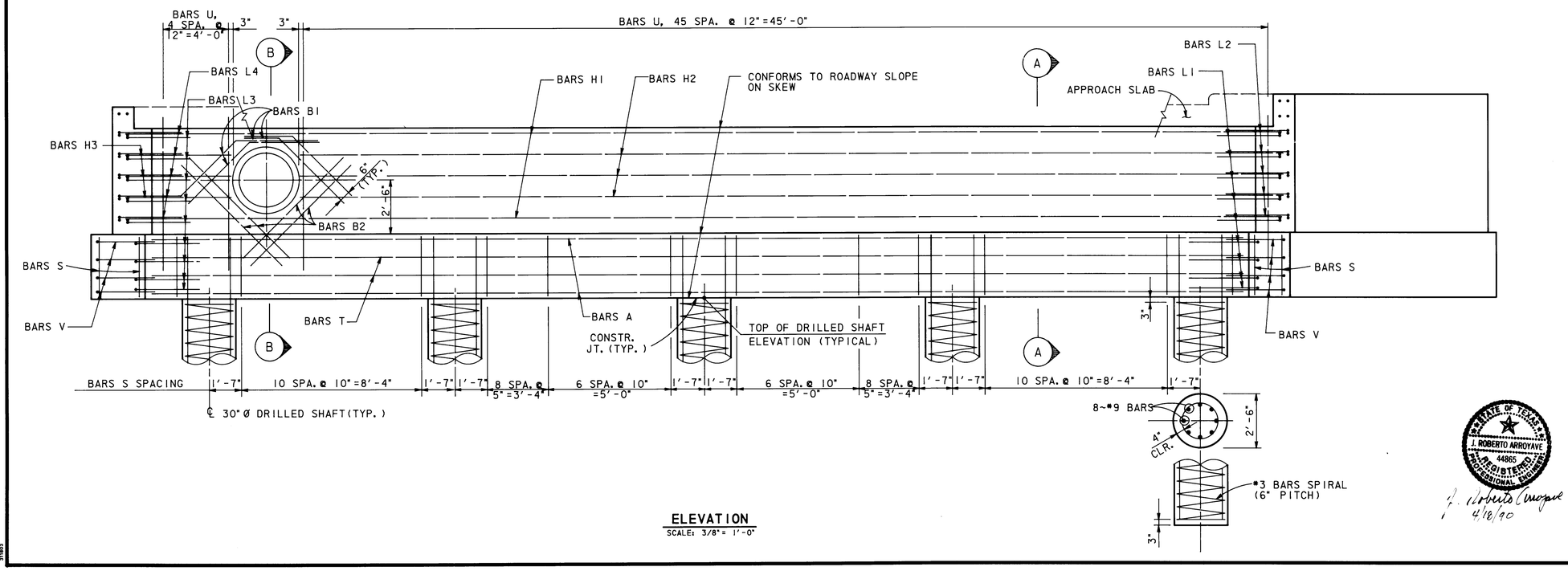

ELEVATION
SCALE: 3/8" = 1'-0"

NOTES:

1. CONCRETE SHALL BE CLASS B-1 FOR ABUTMENT AND WINGWALLS; CLASS B-2 FOR BRIDGE SEATS.
2. ALL REINFORCING STEEL SHALL BE ASTM A-615, GRADE 60.
3. AVERAGE CALCULATED DRILLED SHAFT LOAD = 113 TONS/SHAFT MAIN CAP; 10 TONS/SHAFT WINGWALLS.
4. FOR BEARING SEAT ELEVATIONS SEE SHEET 22.
5. FOR SECTIONS, DETAILS, TOP OF SHAFT ELEVATIONS & ESTIMATED QUANTITIES SEE SHEETS 18 & 19 OF 40.

APPROVED FOR CITY OF HOUSTON 9
DEPARTMENT OF PUBLIC WORKS:

Water Design	Paving
Water Quality	Storm Sewer
Asst. Dir. Water Div.	Sanitary Sewer
Assistant Director	Director
Date:	5-31-90
OTHER DEPT'S Traffic & Transp.	City Planning Dept:

NO.	DATE	REVISION	APPROV.
4			
3			
2			
1			

WEST LAKE HOUSTON PARKWAY
WEST FORK SAN JACINTO RIVER BRIDGE

ABUTMENT BENT NO. 1

Turner Collie & Braden Inc.
ENGINEERS • PLANNERS

STATE OF TEXAS
J. ROBERTO ARROYAVE
44865
REGISTERED PROFESSIONAL ENGINEER
4/18/90

Unit ARROYAVE	Scale: AS SHOWN	Date NOVEMBER, 1989	
Designed TG	Checked EDC	Job No. 62-68012-001 Contract	
Drawn DDH	Approved	Sheet 16 of 41	

311803

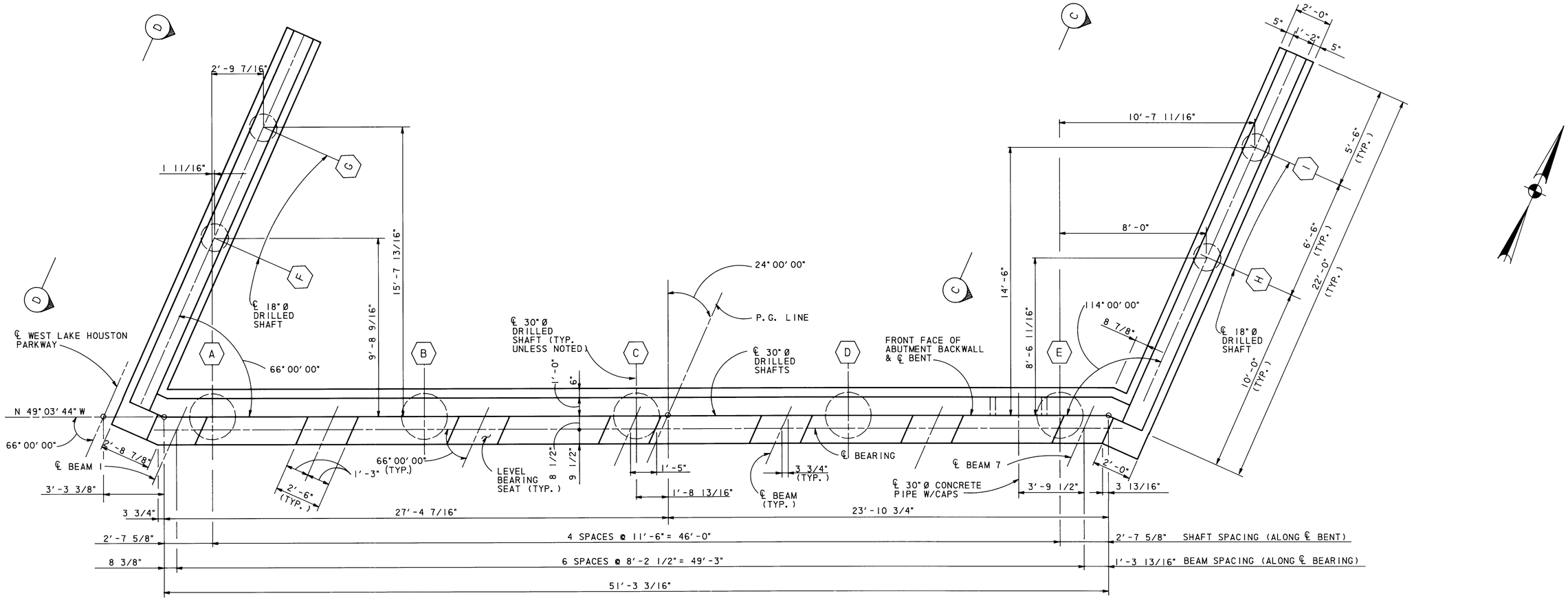

PLAN

SCALE: 3/8" = 1'-0"

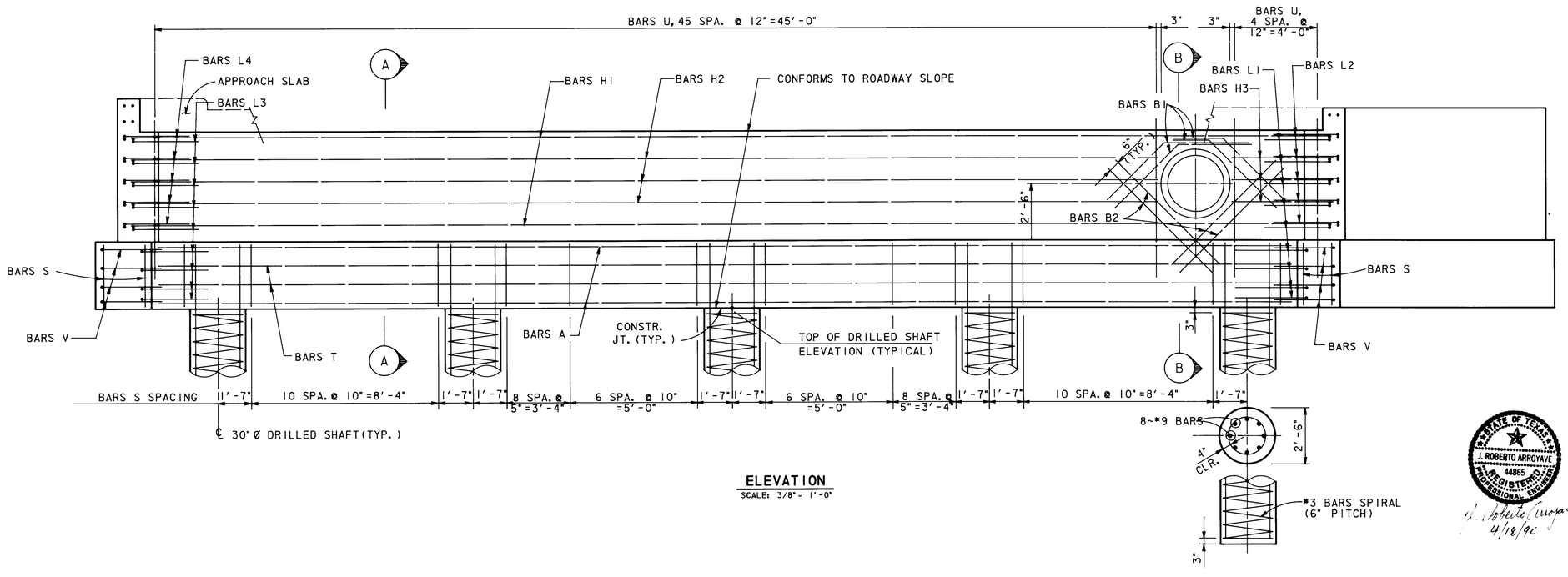

ELEVATION

SCALE: 3/8" = 1'-0"

NOTE :
FOR NOTES SEE SHEET 16 OF 40.

APPROVED FOR CITY OF HOUSTON 9

DEPARTMENT OF PUBLIC WORKS:

Water Design	Paving
Water Quality	Storm Sewer
Assist. Dir. Water Div.	Sanitary Sewer
Assistant Director	Director

Date: 5-31-90

OTHER DEPT'S

Traffic & Transp. — City Planning Dept.

NO.	DATE	REVISION	APPROV.
4			
3			
2			
1			

WEST LAKE HOUSTON PARKWAY
WEST FORK SAN JACINTO RIVER BRIDGE

ABUTMENT BENT NO. 33

Turner Collie & Braden Inc.
ENGINEERS • PLANNERS

Unit ARROYAVE	Scale: AS SHOWN	Date NOVEMBER, 1989	
Designed TG	Checked EDC	Job No 82-68012-001 Contract	
Drawn DDH	Approved	Sheet 17 of 41	

STATE OF TEXAS — J. ROBERTO ARROYAVE — 44865 — REGISTERED PROFESSIONAL ENGINEER

J. Roberto Arroyave 4/18/90

311803

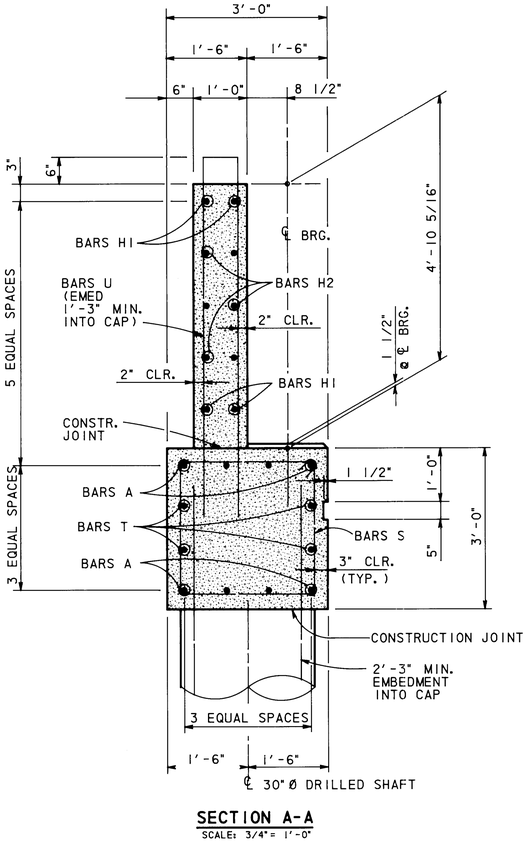

SECTION A-A
SCALE: 3/4" = 1'-0"

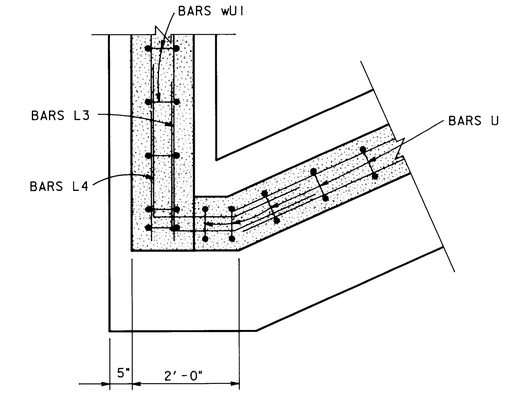

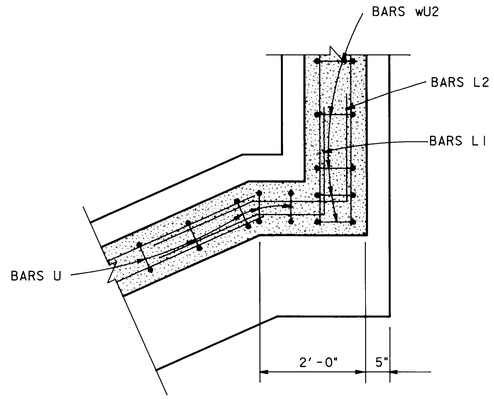

WINGWALL REINFORCING

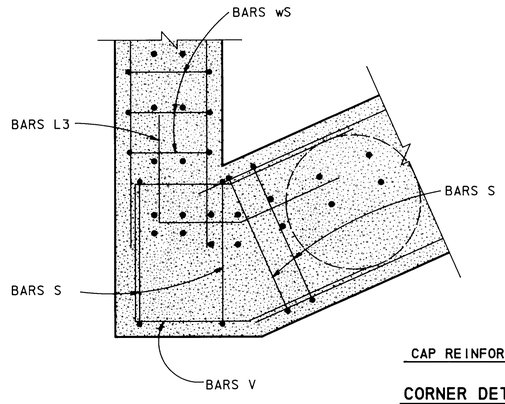

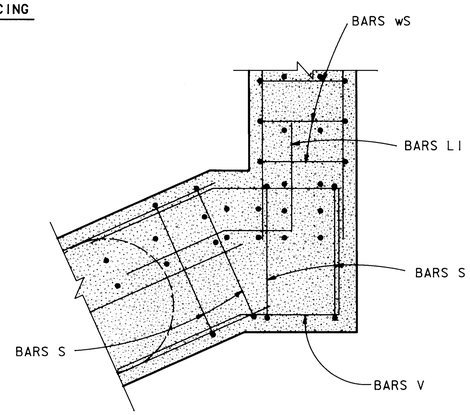

CAP REINFORCING

CORNER DETAILS
SCALE: 3/4" = 1'-0"

BILL OF REINFORCING STEEL

BAR	NO.	SIZE	SPACING	LENGTH	WEIGHT
A	8	# 11	SHOWN	50'-11"	2,164
B1	8	# 5	↑	7'-8"	64
B2	8	# 5	↓	7'-8"	64
H1	4	# 5		52'-3"	218
H2	6	# 5		45'-6"	285
H3	6	# 5		4'-5"	28
L1	9	# 5		4'-10"	45
L2	5	# 5		5'-0"	26
L3	9	# 5		4'-7"	43
L4	5	# 5		5'-0"	26
S	60	# 5		10'-8"	668
T	4	# 5		50'-11"	212
U	51	# 5		13'-10"	736
V	8	# 5		12'-4"	103
wH	42	# 6		21'-8"	1,367
wS	48	# 5	↓	8'-8"	434
wU1	30	# 5	↑	14'-6"	454
wU2	30	# 5	SHOWN	15'-6"	485
				TOTAL	7,422

ESTIMATED QUANTITIES

ITEM	UNIT	QUANTITY
REINFORCING STEEL	LBS.	14,844
CL. B-1 CONC. (ABUTMENT & WINGWALLS)	C.Y.	97.4
CL. B-2 CONC. (BRIDGE SEATS)	C.Y.	0.3
30" Ø DRILLED SHAFTS	L.F.	500
18" Ø DRILLED SHAFTS	L.F.	160

⊙ CALCULATED FOR ONE ABUTMENT BENT ONLY

△ CALCULATED FOR ABUTMENT BENT 1 AND ABUTMENT BENT 33.

⊡ FOR CONTRACTOR'S INFORMATION ONLY.

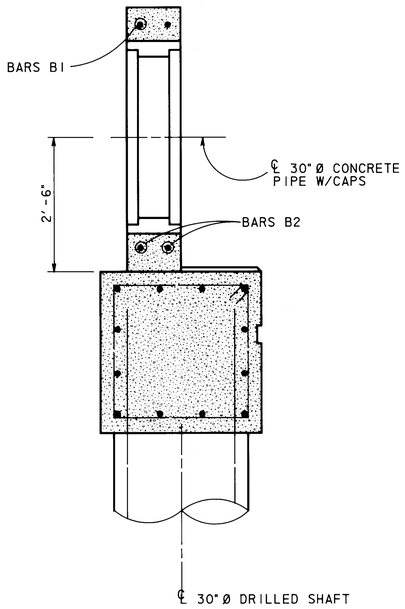

SECTION B-B
SCALE: 3/4" = 1'-0"

TOP OF SHAFT ELEVATION

ABUT.	A	B	C	D	E	F	G	H	I
1	50.012	49.806	49.601	49.396	49.190	50.077	50.071	49.105	49.098
① 33	50.481	50.213	49.944	49.675	49.407	50.446	50.365	49.192	49.111

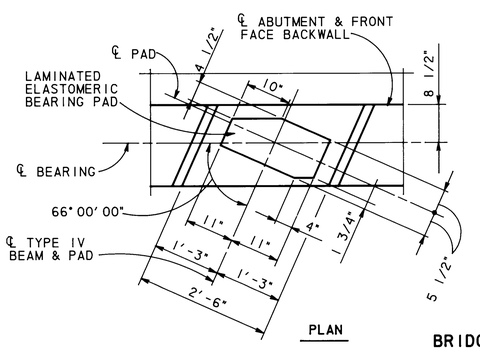

PLAN

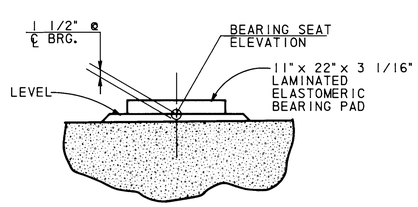

ELEVATION

BRIDGE SEAT DETAILS
SCALE: 3/4" = 1'-0"

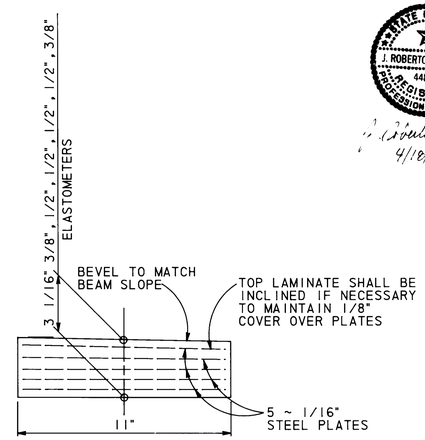

LAMINATED BEARING PADS
(60 DUROMETER)

STATE OF TEXAS
J. ROBERTO ARROYAVE
44865
REGISTERED PROFESSIONAL ENGINEER
4/18/90

APPROVED FOR CITY OF HOUSTON 9
DEPARTMENT OF PUBLIC WORKS:

Water Design: D. Landon 5-9-90	Paving: [illegible] 5.2.90
Water Quality	Storm Sewer: [illegible] 5/7/90
Assist.- Dir. Water Div.: Bill Dunham 5-12-90	Sanitary Sewer
Assistant Director	Director: 5-31-90
Date:	
OTHER DEPT'S: Traffic & Transp. 5/10/90	City Planning Dept: 5-23-90

NO.	DATE	REVISION	APPROV.
4			
3			
2			
①	8-11-92	REVISED ABUT. 33 SHAFT ELEVATIONS	CBM

WEST LAKE HOUSTON PARKWAY
WEST FORK SAN JACINTO RIVER BRIDGE

MISC. ABUTMENT DETAILS

1 OF 2

Turner Collie & Braden Inc.
ENGINEERS • PLANNERS

Unit ARROYAVE	Scale: AS SHOWN	Date NOVEMBER, 1989	
Designed TG	Checked EDC	Job No. 62-68012-001	Contract
Drawn DDH	Approved	Sheet 18	of 41

3111803

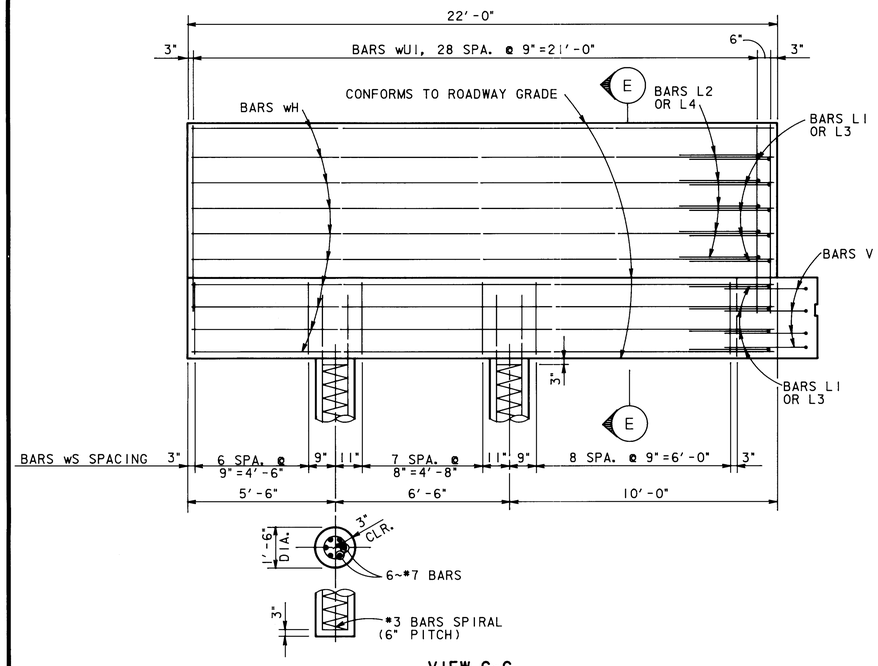

VIEW C-C
SCALE: 3/8" = 1'-0"

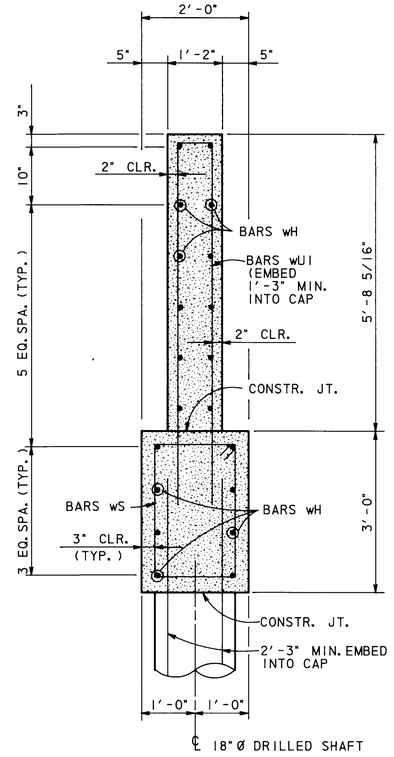

SECTION E-E
SCALE: 3/4" = 1'-0"

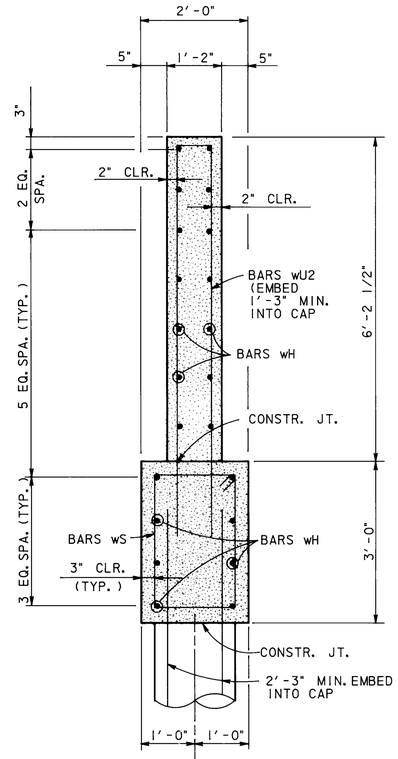

SECTION F-F
SCALE: 3/4" = 1'-0"

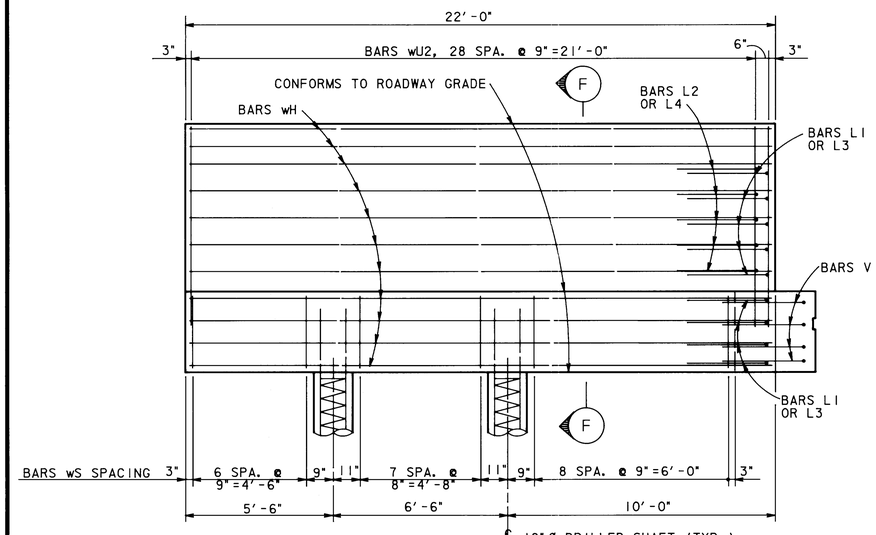

VIEW D-D
SCALE: 3/8" = 1'-0"

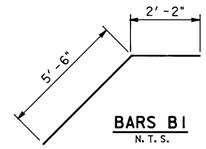

BARS B1
N.T.S.

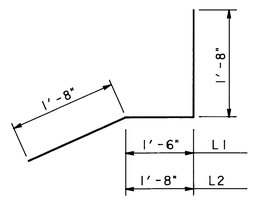

BARS L1 & 2
N.T.S.

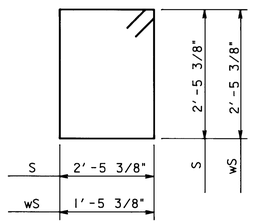

BARS S & wS
N.T.S.

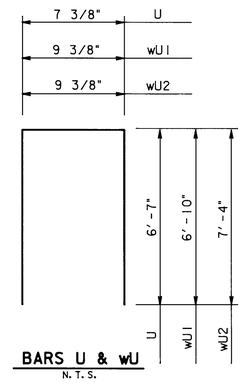

BARS U & wU
N.T.S.

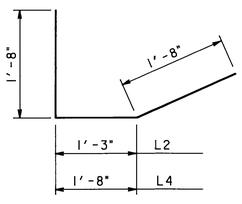

BARS L3 & 4
N.T.S.

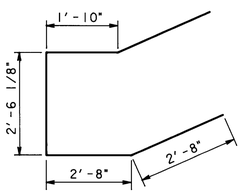

BARS V
N.T.S.

STATE OF TEXAS
J. ROBERTO ARROYAVE
44865
REGISTERED PROFESSIONAL ENGINEER

J. Roberto Arroyave
4/18/90

APPROVED FOR CITY OF HOUSTON 9
DEPARTMENT OF PUBLIC WORKS:

D. Headers 5-9-90
Water Design

Paving

Water Quality

Storm Sewer 5-7-90

Assist.- Dir. Water Div.

Sanitary Sewer 5/7/90

Assistant Director

Director

Date:

OTHER DEPT'S

Traffic & Transp. 5/10/90

City Planning Dept. 5-30-90

NO.	DATE	REVISION	APPROV.
4			
3			
2			
1			

WEST LAKE HOUSTON PARKWAY
WEST FORK SAN JACINTO RIVER BRIDGE

MISC. ABUTMENT DETAILS

2 OF 2

Turner Collie & Braden Inc.
ENGINEERS • PLANNERS

Unit	ARROYAVE	Scale:	AS SHOWN	Date	NOVEMBER, 1989
Designed	TG	Checked	EDC	Job No.	62-68012-001 Contract
Drawn	DDH	Approved		Sheet	19 of 41

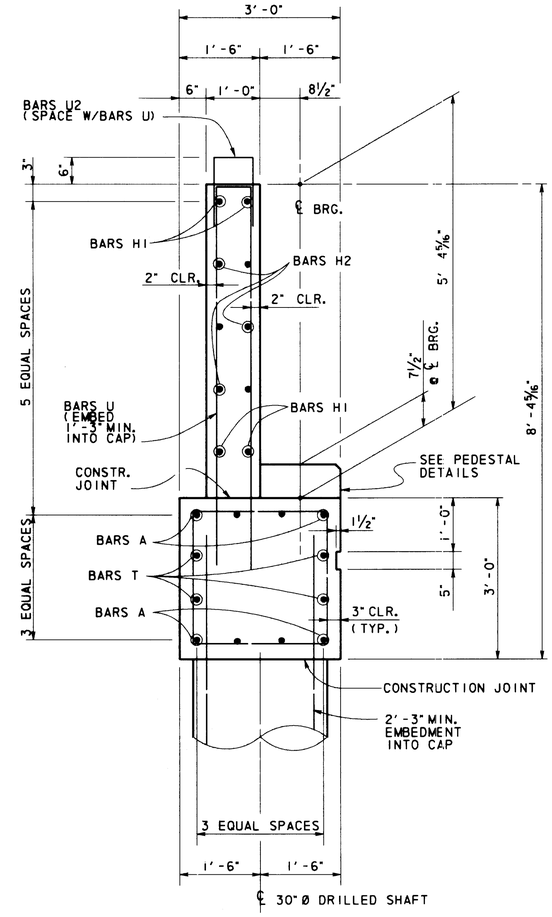

SECTION A-A

SCALE: ¾" = 1'-0"
(ABUT. 1 ONLY)

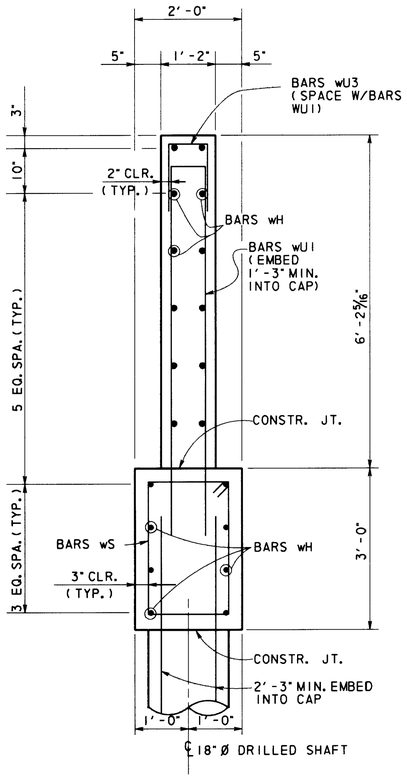

SECTION E-E

SCALE: ¾" = 1'-0"
(ABUT. 1 ONLY-
EAST WINGWALL)

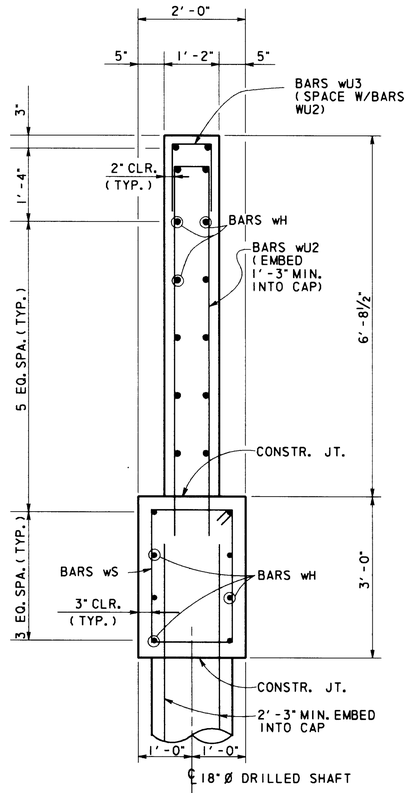

SECTION F-F

SCALE: ¾" = 1'-0"
(ABUT. 1 ONLY-
WEST WINGWALL)

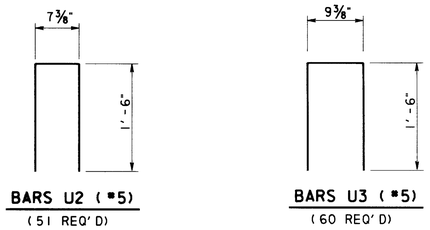

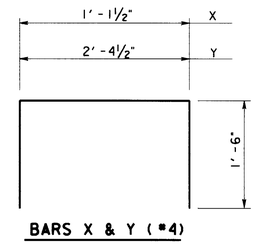

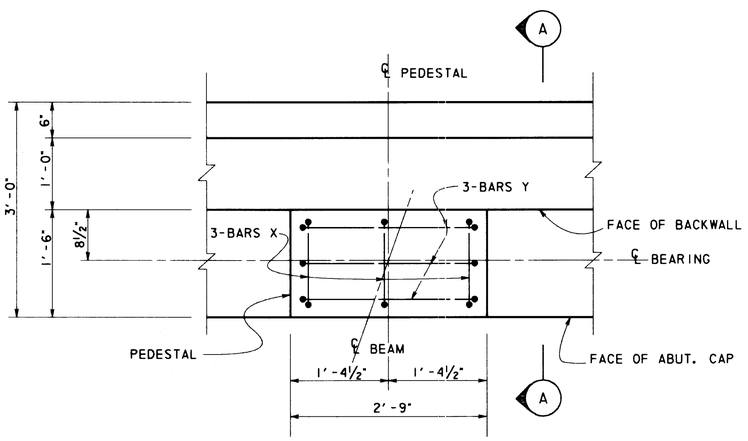

PLAN

SCALE: 1" = 1'-0"

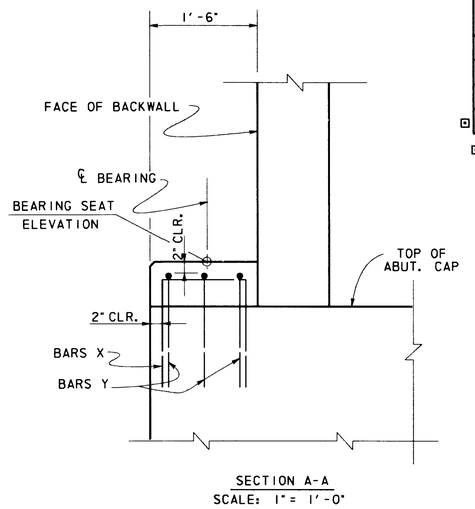

SECTION A-A

SCALE: 1" = 1'-0"

PEDESTALS AT ABUTMENT 1

ADDITIONAL QUANTITIES FOR ABUTMENT 1		
ITEM	UNIT	QUANITY
CL. B-1 CONC. (ABUTMENT & WINGWALLS)	C.Y.	1.9
CL. B-2 CONC. (BRIDGE SEATS)	C.Y.	0.67
⊡ REINFORCING STEEL	LBS.	562

⊡ FOR CONTRACTOR'S INFORMATION ONLY

(1) THIS SHEET ADDED BY CHANGE IN CONTRACT TO CORRECT FOR TOP OF DRILLED SHAFTS AT ABUTMENT 1 BEING PLACED 6" LOW. (TOP OF SHAFT ELEVATIONS IN PLANS WERE IN ERROR.)

NO.	DATE	REVISION	APPROV.
4			
3			
2			
(1)	8-11-92	SHEET ADDED	

WEST LAKE HOUSTON PARKWAY
WEST FORK SAN JACINTO RIVER BRIDGE

MODIFICATIONS TO ABUTMENT 1

Turner Collie & Braden Inc.
ENGINEERS • PLANNERS

Unit JANAK	Scale: AS SHOWN	Date AUGUST, 1992	
Designed EDC	Checked CBM	Job No. 62-68012-001 Contract	
Drawn BST	Approved	Sheet 19A of 41	

D: \ 130 \ WLHPA1.DGN (1) 08-26-92 BST

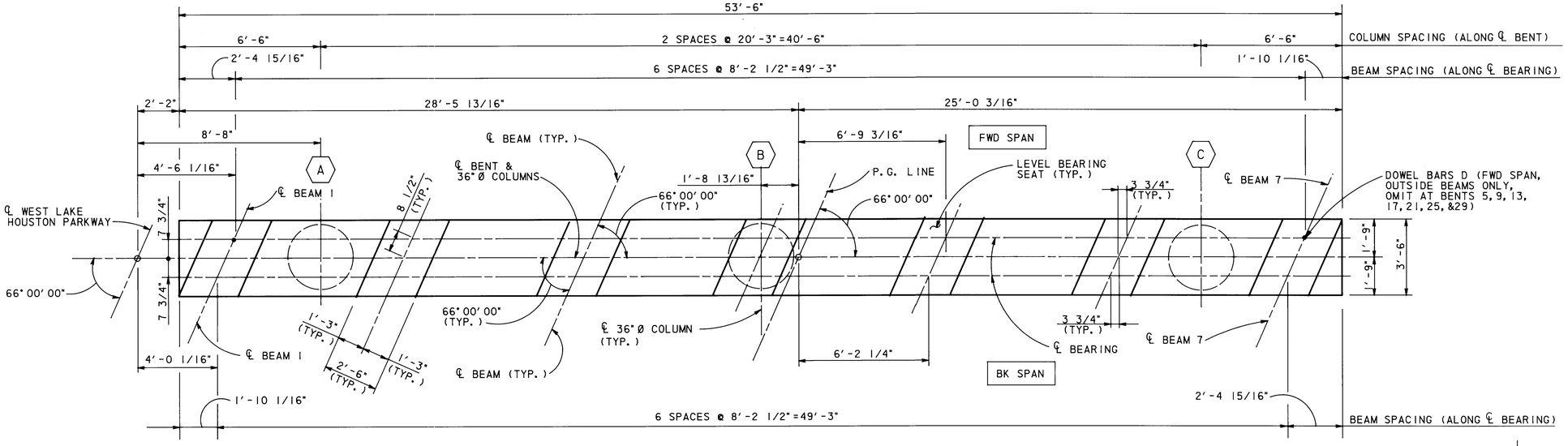

PLAN

SCALE: 3/8"= 1'-0"

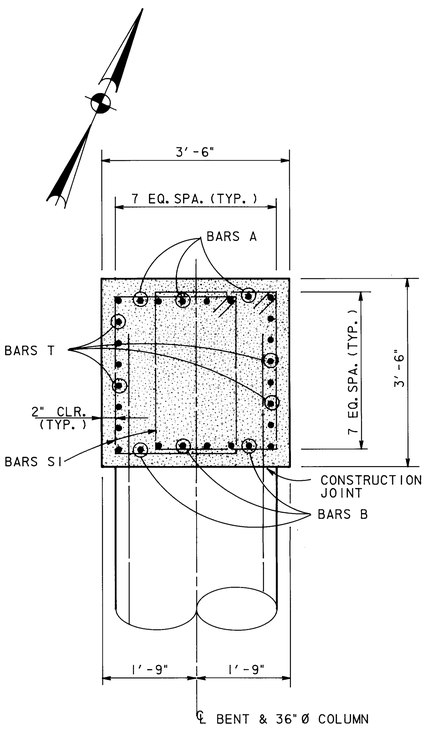

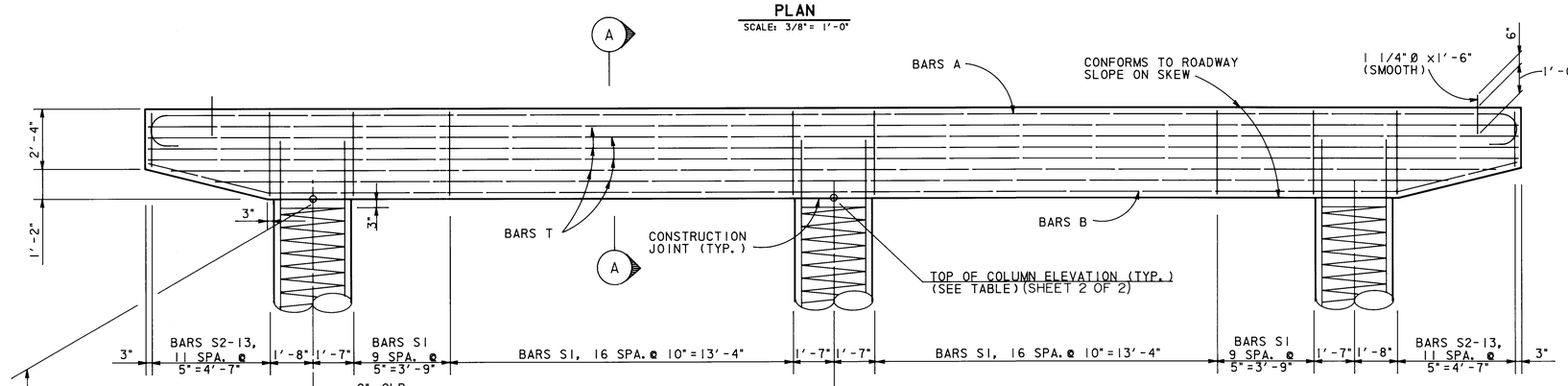

ELEVATION

SCALE: 3/8"= 1'-0"

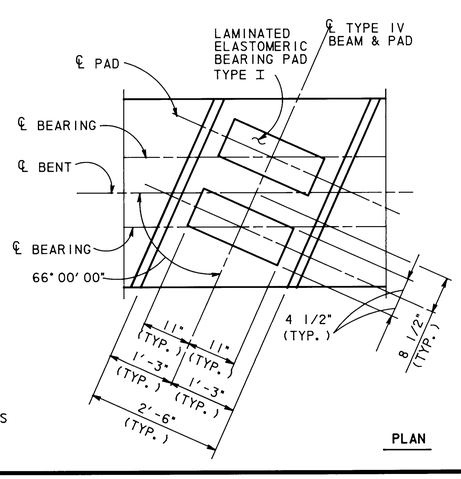

PLAN

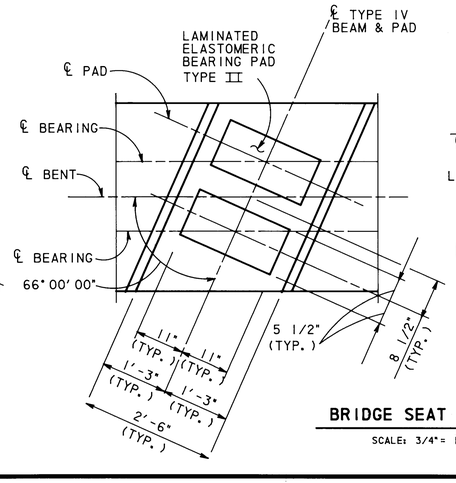

BRIDGE SEAT DETAILS

SCALE: 3/4"= 1'-0"

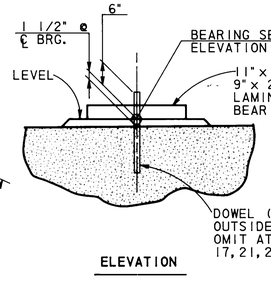

ELEVATION

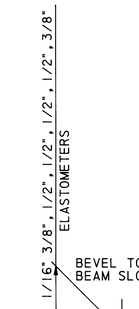

SECTION A-A

SCALE: 3/4"= 1'-0"

LAMINATED BEARING PADS

(60 DUROMETER)
(SEE SHEET 22 FOR LOCATION)

STATE OF TEXAS — J. ROBERTO ARROYAVE — 44865 — REGISTERED PROFESSIONAL ENGINEER
4/18/90

APPROVED FOR CITY OF HOUSTON 9

DEPARTMENT OF PUBLIC WORKS:

Water Design	5-9-90	Paving	5-7-90
Water Quality		Storm Sewer	4-17-90
Assist. Dir. Water Div.	5-17-90	Sanitary Sewer	
Assistant Director		Director	5-31-90
Date:			
OTHER DEPT'S Traffic & Transp.	5/10/90	City Planning Dept.	5-30-90

NO.	DATE	REVISION	APPROV.
4			
3			
2			
1			

WEST LAKE HOUSTON PARKWAY
WEST FORK SAN JACINTO RIVER BRIDGE

INTERIOR BENT DETAILS

1 OF 2

Turner Collie & Braden Inc.
ENGINEERS • PLANNERS

Unit ARROYAVE	Scale: AS SHOWN	Date NOVEMBER, 1989	
Designed EDC	Checked TG	Job No. 62-68012-001 Contract	
Drawn DDH	Approved	Sheet 20 of 41	

311803

BENT	COLUMN	TOP OF COL. ELEV.	TOP OF SHAFT ELEV.	COLUMN HEIGHT (FT.)
2	A	50.196	42.000	8.196
	B	49.834	42.000	7.834
	C	49.472	42.000	7.472
3	A	50.314	42.000	8.314
	B	49.952	42.000	7.952
	C	49.590	42.000	7.590
4	A	50.432	42.000	8.432
	B	50.070	42.000	8.070
	C	49.709	42.000	7.709
5	A	50.436	42.000	8.436
	B	50.074	42.000	8.074
	C	49.712	42.000	7.712
6	A	50.668	42.000	8.668
	B	50.307	42.000	8.307
	C	49.945	42.000	7.945
7	A	50.787	42.000	8.787
	B	50.425	42.000	8.425
	C	50.063	42.000	8.063
8	A	50.905	42.000	8.905
	B	50.543	42.000	8.543
	C	50.181	42.000	8.181
9	A	50.908	42.000	8.908
	B	50.547	42.000	8.547
	C	50.185	42.000	8.185
10	A	51.141	42.000	9.141
	B	50.779	42.000	8.779
	C	50.418	42.000	8.418
11	A	51.259	42.000	9.259
	B	50.898	42.000	8.898
	C	50.536	42.000	8.536
12	A	51.378	42.000	9.378
	B	51.016	42.000	9.016
	C	50.654	42.000	8.654
13	A	51.381	42.000	9.381
	B	51.019	42.000	9.019
	C	50.658	42.000	8.658
14	A	51.614	42.000	9.614
	B	51.252	42.000	9.252
	C	50.890	42.000	8.890
15	A	51.732	42.000	9.732
	B	51.370	42.000	9.370
	C	51.009	42.000	9.009
16	A	51.850	42.000	9.850
	B	51.489	42.000	9.489
	C	51.127	42.000	9.127
17	A	51.854	42.000	9.854
	B	51.492	42.000	9.492
	C	51.130	42.000	9.130

BENT	COLUMN	TOP OF COL. ELEV.	TOP OF SHAFT ELEV.	COLUMN HEIGHT (FT.)
18	A	52.087	42.000	10.087
	B	51.725	42.000	9.725
	C	51.363	42.000	9.363
19	A	52.205	42.000	10.205
	B	51.843	42.000	9.843
	C	51.481	42.000	9.481
20	A	52.323	42.000	10.323
	B	51.961	42.000	9.961
	C	51.600	42.000	9.600
21	A	52.327	42.000	10.327
	B	51.965	42.000	9.965
	C	51.603	42.000	9.603
22	A	52.674	42.000	10.674
	B	52.352	42.000	10.352
	C	52.036	42.000	10.036
23	A	53.841	42.000	11.841
	B	53.574	42.000	11.574
②	C	53.307	42.000	11.307
24	A	55.330	42.000	13.330
	B	55.063	42.000	13.063
	C	54.796	42.000	12.796
25	A	56.705	42.000	14.705
	B	56.436	42.000	14.436
	C	56.162	42.000	14.162
26	A	57.862	42.000	15.862
	B	57.532	42.000	15.532
	C	57.198	42.000	15.198
27	A	58.035	42.000	16.035
	B	57.644	42.000	15.644
	C	57.250	42.000	15.250
28	A	57.337	42.000	15.337
	B	56.886	42.000	14.886
	C	56.431	42.000	14.431
29	A	55.816	42.000	13.816
	B	55.343	42.000	13.343
	C	54.870	42.000	12.870
30	A	54.456	42.000	12.456
	B	53.983	42.000	11.983
	C	53.510	42.000	11.510
31	A	52.981	42.000	10.981
	B	52.508	42.000	10.508
	C	52.035	42.000	10.035
32	A	51.506	42.000	9.506
	B	51.033	42.000	9.033
	C	50.560	42.000	8.560

BILL OF REINFORCING STEEL-COLUMN

BENT NO.	BAR	NO.	SIZE	SPACING	LENGTH	WEIGHT
2	V1	33	#11	SHOWN	15'-10"	2,776
3, 4, 5	V2	33	#11	↑	16'-1"	2,820
6, 7, 8, 9	V3	33	#11	↕	16'-6"	2,893
10, 11, 12, 13	V4	33	#11	↕	17'-0"	2,981
14, 15	V5	33	#11	↕	17'-4"	3,039
16, 17, 18	V6	33	#11	↕	17'-9"	3,112
19, 20, 21	V7	33	#11	↕	17'-11"	3,141
22	V8	33	#11	↕	18'-4"	3,214
23	V9	33	#11	↕	19'-6"	3,419
24	V10	33	#11	↕	21'-0"	3,682
25	V11	33	#11	↕	22'-4"	3,916
26, 27	V12	33	#11	↕	23'-8"	4,149
28	V13	33	#11	↕	23'-0"	4,033
29	V14	33	#11	↕	21'-5"	3,755
30	V15	33	#11	↕	20'-1"	3,521
31	V16	33	#11	↕	18'-7"	3,258
32	V17	33	#11	↕	17'-2"	3,010
2, 3, 4, 5	Z1	3	#4	↕	149'-3"	299
6, 7, 8, 9	Z2	3	#4	↕	157'-7"	316
10, 11, 12, 13, 32	Z3	3	#4	↕	165'-10"	332
14, 15, 16, 17, 18	Z4	3	#4	↕	174'-2"	349
19, 20, 21	Z5	3	#4	↕	182'-5"	366
22, 31	Z6	3	#4	↕	190'-9"	382
23	Z7	3	#4	↕	207'-4"	415
24	Z8	3	#4	↕	232'-2"	465
25	Z9	3	#4	↕	257'-1"	515
26, 27	Z10	3	#4	↕	273'-8"	548
28	Z11	3	#4	↕	265'-5"	532
29	Z12	3	#4	↕	240'-6"	482
30	Z13	3	#4	SHOWN	215'-7"	432

⊙ BILL OF REINFORCING STEEL-CAP

BAR	NO.	SIZE	SPACING	LENGTH	WEIGHT
A	8	#11	SHOWN	56'-3"	2,391
B	8	#11	↑	53'-2"	2,260
S1	108	#5	↕	11'-7"	1,305
S2-13	24	#5	↕	12'-2"	305
			↓	(AVG.)	
T	12	#4	SHOWN	53'-2"	426
①				TOTAL	6,687
① △ D	48	1 1/4" DIA.	SHOWN	1'-6"	300

△ ESTIMATED QUANTITIES

ITEM	UNIT	QUANTITY
① ⊡ REINFORCING STEEL	LBS.	318,936
① CL. B-1 CONC. (CAPS)	C.Y.	730.2
① CL. B-1 CONC. (36"Ø COL.)	C.Y.	250.5
① CL. B-2 CONC. (BRIDGE SEATS)	C.Y.	9.6
54"Ø DRILLED SHAFTS	L.F.	6,510

⊙ CALCULATED FOR ONE INTERIOR BENT ONLY

△ CALCULATED FOR INTERIOR BENTS 2 THROUGH 32.

⊡ FOR CONTRACTOR'S INFORMATION ONLY.

NOTES:

1. CONCRETE SHALL BE CLASS B-1 FOR BENT CAPS AND COLUMNS; CLASS B-2 FOR BRIDGE SEATS.
2. ALL REINFORCING STEEL SHALL BE ASTM A-615, GRADE 60.
3. AVERAGE CALCULATED DRILLED SHAFT LOAD = 364 TONS/SHAFT.
4. FOR BEARING SEAT ELEVATIONS SEE SHEET 22.

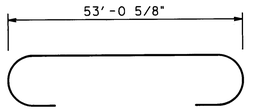

BARS A
NTS

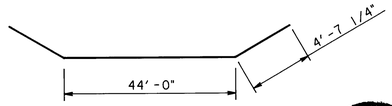

BARS B
NTS

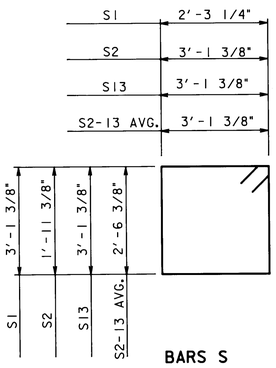

BARS S
NTS

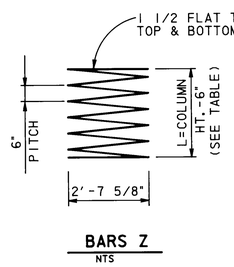

BARS Z
NTS

I ROBERTO ARROYAVE
44865
REGISTERED PROFESSIONAL ENGINEER
STATE OF TEXAS
4/18/90

APPROVED FOR CITY OF HOUSTON 9

DEPARTMENT OF PUBLIC WORKS:

Water Design — D. Redfern 5-9-90
Water Quality
Asslst. Dir. Water Div. — 5-17-90
Assistant Director
Date:

Paving — 5-7-90
Storm Sewer
Sanitary Sewer
Director — 5-31-90

OTHER DEPT'S
Traffic & Transp. — 5/16/90
City Planning Dept.

NO.	DATE	REVISION	APPROV.
4			
3			
②	8-11-92	REVISED BENTS 23 & 24	
①	2-28-91	QUANTITY REVISIONS PER ADDENDUM # 1	

WEST LAKE HOUSTON PARKWAY
WEST FORK SAN JACINTO RIVER BRIDGE

INTERIOR BENT DETAILS

2 OF 2

Turner Collie & Braden Inc.
ENGINEERS • PLANNERS

Unit ARROYAVE	Scale:	Date OCTOBER, 1989	
Designed EDC	Checked JRA	Job No.62-68012-001 Contract	
Drawn DDH	Approved	Sheet 21 of 41	

ADDENDUM # 1

311803

BEARING SEAT ELEVATIONS								BEARING PAD TYPE
BENT	BEAM 1	BEAM 2	BEAM 3	BEAM 4	BEAM 5	BEAM 6	BEAM 7	
1 (FWD)	53.6668	53.5202	53.3735	53.2268	53.0802	52.9335	52.7869	III
2 (BK) (FWD)	53.8981 53.8995	53.7515 53.7529	53.6048 53.6062	53.4581 53.4596	53.3115 53.3129	53.1648 53.1663	53.0182 53.0196	I
3 (BK) (FWD)	54.0163 54.0177	53.8696 53.8711	53.7230 53.7244	53.5763 53.5778	53.4297 53.4311	53.2830 53.2845	53.1364 53.1378	I
4 (BK) (FWD)	54.1345 54.1359	53.9878 53.9893	53.8412 53.8426	53.6945 53.6960	53.5479 53.5493	53.4012 53.4026	53.2546 53.2560	I
5 (BK) (FWD)	54.1381 54.1395	53.9914 53.9929	53.8448 53.8462	53.6981 53.6995	53.5515 53.5529	53.4048 53.4062	53.2582 53.2596	III
6 (BK) (FWD)	54.3709 54.3723	54.2242 54.2256	54.0776 54.0790	53.9309 53.9323	53.7843 53.7857	53.6376 53.6390	53.4909 53.4924	I
7 (BK) (FWD)	54.4891 54.4905	54.3424 54.3438	54.1958 54.1972	54.0491 54.0505	53.9024 53.9039	53.7558 53.7572	53.6091 53.6106	I
8 (BK) (FWD)	54.6073 54.6087	54.4606 54.4620	54.3139 54.3154	54.1673 54.1687	54.0206 54.0221	53.8740 53.8754	53.7273 53.7288	I
9 (BK) (FWD)	54.6109 54.6123	54.4642 54.4656	54.3175 54.3190	54.1709 54.1723	54.0242 54.0257	53.8776 53.8790	53.7309 53.7323	III
10 (BK) (FWD)	54.8436 54.8451	54.6970 54.6984	54.5503 54.5518	54.4037 54.4051	54.2570 54.2584	54.1104 54.1118	53.9637 53.9651	I
11 (BK) (FWD)	54.9618 54.9632	54.8152 54.8166	54.6685 54.6699	54.5219 54.5233	54.3752 54.3766	54.2286 54.2300	54.0819 54.0833	I
12 (BK) (FWD)	55.0800 55.0814	54.9334 54.9348	54.7867 54.7881	54.6401 54.6415	54.4934 54.4948	54.3467 54.3482	54.2001 54.2015	I
13 (BK) (FWD)	55.0836 55.0850	54.9370 54.9384	54.7903 54.7917	54.6436 54.6451	54.4970 54.4984	54.3503 54.3518	54.2037 54.2051	III
14 (BK) (FWD)	55.3164 55.3178	55.1697 55.1712	55.0231 55.0245	54.8764 54.8779	54.7298 54.7312	54.5831 54.5845	54.4365 54.4379	I
15 (BK) (FWD)	55.4346 55.4360	55.2879 55.2894	55.1413 55.1427	54.9946 54.9960	54.8480 54.8494	54.7013 54.7027	54.5547 54.5561	I
16 (BK) (FWD)	55.5528 55.5542	55.4061 55.4075	55.2595 55.2609	55.1128 55.1142	54.9662 54.9676	54.8195 54.8209	54.6729 54.6743	I
17 (BK) (FWD)	55.5564 55.5578	55.4097 55.4111	55.2631 55.2645	55.1164 55.1178	54.9697 54.9712	54.8231 54.8245	54.6764 54.6779	III
18 (BK) (FWD)	55.7892 55.7906	55.6425 55.6439	55.4958 55.4973	55.3492 55.3506	55.2025 55.2040	55.0559 55.0573	54.9092 54.9107	I
19 (BK) (FWD)	55.9074 55.9088	55.7607 55.7621	55.6140 55.6155	55.4674 55.4688	55.3207 55.3222	55.1741 55.1755	55.0274 55.0288	I
20 (BK) (FWD)	56.0256 56.0270	55.8789 55.8803	55.7322 55.7337	55.5856 55.5870	55.4389 55.4403	55.2923 55.2937	55.1456 55.1470	I
21 (BK) (FWD)	56.0291 56.0306	55.8825 55.8839	55.7358 55.7372	55.5892 55.5906	55.4425 55.4439	55.2959 55.2973	55.1492 55.1506	III
22 (BK) (FWD)	56.3654 56.3729	56.2335 56.2415	56.1026 56.1110	55.9727 55.9815	55.8438 55.8530	55.7158 55.7255	55.5889 55.5990	I
23 (BK) (FWD)	57.5148 57.5324	57.4064 57.4241	57.2981 57.3158	57.1898 57.2076	57.0815 57.0993	56.9733 56.9910	56.8650 56.8827	I
24 (BK) (FWD)	59.0039 59.0215	58.8955 58.9133	58.7872 58.8050	58.6790 58.6967	58.5707 58.5884	58.4624 58.4802	58.3541 58.3719	I
25 (BK) (FWD)	60.3786 60.3962	60.2702 60.2878	60.1615 60.1788	60.0521 60.0692	59.9420 59.9588	59.8312 59.8477	59.7197 59.7359	III
26 (BK) (FWD)	61.5539 61.5613	61.4212 61.4284	61.2879 61.2947	61.1538 61.1604	61.0191 61.0254	60.8837 60.8897	60.7476 60.7533	I
27 (BK) (FWD)	61.7449 61.7419	61.5877 61.5844	61.4298 61.4262	61.2711 61.2672	61.1118 61.1076	60.9517 60.9473	60.7910 60.7862	I
28 (BK) (FWD)	61.0661 61.0527	60.8843 60.8706	60.7018 60.6877	60.5185 60.5042	60.3345 60.3199	60.1499 60.1349	59.9645 59.9493	I
29 (BK) (FWD)	59.5517 59.5341	59.3601 59.3424	59.1684 59.1506	58.9766 58.9589	58.7849 58.7671	58.5931 58.5754	58.4014 58.3837	III
30 (BK) (FWD)	58.1917 58.1740	58.0000 57.9823	57.8083 57.7906	57.6166 57.5988	57.4248 57.4071	57.2331 57.2153	57.0413 57.0236	I
31 (BK) (FWD)	56.7170 56.6994	56.5254 56.5076	56.3336 56.3159	56.1419 56.1241	55.9502 55.9324	55.7584 55.7407	55.5667 55.5489	I

BEARING SEAT ELEVATIONS								BEARING PAD TYPE
BENT	BEAM 1	BEAM 2	BEAM 3	BEAM 4	BEAM 5	BEAM 6	BEAM 7	
32 (BK) (FWD)	55.2423 55.2247	55.0507 55.0330	54.8590 54.8412	54.6672 54.6495	54.4755 54.4577	54.2837 54.2660	54.0920 54.0743	I
33 (BK)	53.6539	53.4622	53.2704	53.0787	52.8870	52.6953	52.5036	III

BEARING TYPE	QUANTITY
I	336
III	112

(FOR CONTRACTOR'S INFORMATION ONLY)

APPROVED FOR CITY OF HOUSTON 9

DEPARTMENT OF PUBLIC WORKS:

Water Design — D. Isadore 5-9-90

Water Quality

Assistant Director - Water Div. — Bill Burkland 5-17-90

Assistant Director

Date:

Paving — T. Waley 5-7-90

Storm Sewer — Willie [illegible] 5/7/90

Sanitary Sewer

Director — 5-31-90

OTHER DEPT'S

Traffic & Transp. — 5/10/90

City Planning Dept. — Charles Smith

NO.	DATE	REVISION	APPROV.
4			
3			
2			
1	8-11-92	REVISED BENTS 23 & 24	

WEST LAKE HOUSTON PARKWAY
WEST FORK SAN JACINTO RIVER BRIDGE

BEARING SEAT ELEVATIONS

Turner Collie & Braden Inc.
ENGINEERS • PLANNERS

STATE OF TEXAS — J. ROBERTO ARROYAVE — 44865 — REGISTERED PROFESSIONAL ENGINEER

J. Roberto Arroyave 4/10/92

Unit ARROYAVE	Scale: NONE	Date DECEMBER, 1989	
Designed EDC	Checked JRA	Job No.62-68012-001 Contract	
Drawn DDH	Approved	Sheet 22 of 41	

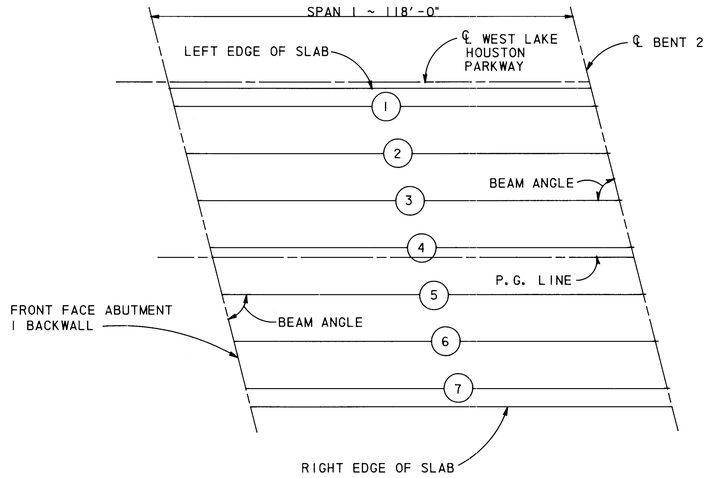

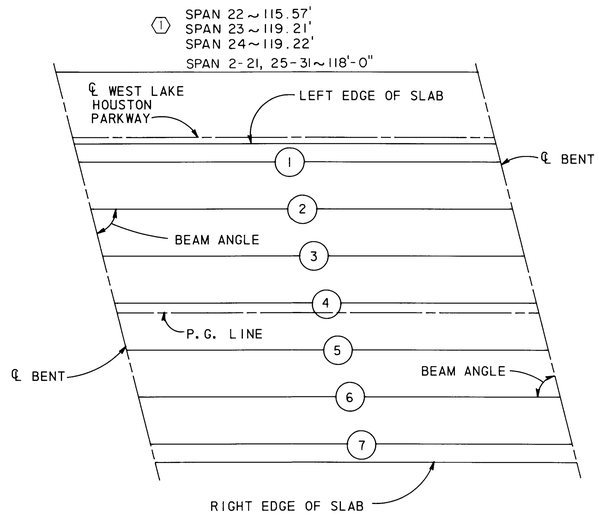

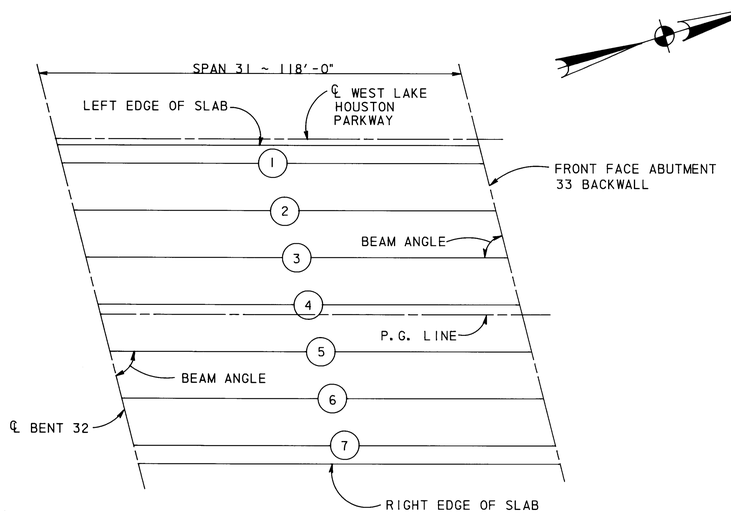

BENT REPORT

BENT NO. 1 (N 82 56 15.68 E)

DISTANCE BETWEEN STATION LINE AND BEAM 1, 4.2874 R

		BEAM SPAC. (C.L. BENT)	BEAM ANGLE D M S	DISTANCE FROM C.L. BENT TO C.L. BEARING ALONG BEAM	ALONG C.L. BT	PERP. TO C.L. BT
SPAN 1	BEAM 1	0.0000	66 0 0.00	0.7754	0.3154	0.7083
	BEAM 2	8.2098	66 0 0.00	0.7754	0.3154	0.7083
	BEAM 3	8.2098	66 0 0.00	0.7754	0.3154	0.7083
	BEAM 4	8.2098	66 0 0.00	0.7754	0.3154	0.7083
	BEAM 5	8.2098	66 0 0.00	0.7754	0.3154	0.7083
	BEAM 6	8.2098	66 0 0.00	0.7754	0.3154	0.7083
	BEAM 7	8.2098	66 0 0.00	0.7754	0.3154	0.7083
	TOTAL	49.2586				

BENT REPORT

BENT NO. 2 - 32 (N 82 56 15.68 E)

DISTANCE BETWEEN STATION LINE AND BEAM 1, 4.2874 R

		BEAM SPAC. (C.L. BENT)	BEAM ANGLE D M S	DISTANCE FROM C.L. BENT TO C.L. BEARING ALONG BEAM	ALONG C.L. BT	PERP. TO C.L. BT
SPAN BK	BEAM 1	0.0000	66 0 0.00	0.7083	0.2881	0.6471
	BEAM 2	8.2098	66 0 0.00	0.7083	0.2881	0.6471
	BEAM 3	8.2098	66 0 0.00	0.7083	0.2881	0.6471
	BEAM 4	8.2098	66 0 0.00	0.7083	0.2881	0.6471
	BEAM 5	8.2098	66 0 0.00	0.7083	0.2881	0.6471
	BEAM 6	8.2098	66 0 0.00	0.7083	0.2881	0.6471
	BEAM 7	8.2098	66 0 0.00	0.7083	0.2881	0.6471
	TOTAL	49.2586				
SPAN FWD	BEAM 1	0.0000	66 0 0.00	0.7083	0.2881	0.6471
	BEAM 2	8.2098	66 0 0.00	0.7083	0.2881	0.6471
	BEAM 3	8.2098	66 0 0.00	0.7083	0.2881	0.6471
	BEAM 4	8.2098	66 0 0.00	0.7083	0.2881	0.6471
	BEAM 5	8.2098	66 0 0.00	0.7083	0.2881	0.6471
	BEAM 6	8.2098	66 0 0.00	0.7083	0.2881	0.6471
	BEAM 7	8.2098	66 0 0.00	0.7083	0.2881	0.6471
	TOTAL	49.2586				

BENT REPORT

BENT NO. 33 (N 82 56 15.68 E)

DISTANCE BETWEEN STATION LINE AND BEAM 1, 4.2874 R

		BEAM SPAC. (C.L. BENT)	BEAM ANGLE D M S	DISTANCE FROM C.L. BENT TO C.L. BEARING ALONG BEAM	ALONG C.L. BT	PERP. TO C.L. BT
SPAN 32	BEAM 1	0.0000	66 0 0.00	0.7754	0.3154	0.7083
	BEAM 2	8.2098	66 0 0.00	0.7754	0.3154	0.7083
	BEAM 3	8.2098	66 0 0.00	0.7754	0.3154	0.7083
	BEAM 4	8.2098	66 0 0.00	0.7754	0.3154	0.7083
	BEAM 5	8.2098	66 0 0.00	0.7754	0.3154	0.7083
	BEAM 6	8.2098	66 0 0.00	0.7754	0.3154	0.7083
	BEAM 7	8.2098	66 0 0.00	0.7754	0.3154	0.7083
	TOTAL	49.2586				

BEAM REPORT, SPAN 1

	HORIZONTAL DISTANCE C-C BENT	C-C BRG.	TRUE DISTANCE BOT. BM. FLG.
BEAM 1	118.0000	116.5163	117.6667
BEAM 2	118.0000	116.5163	117.6667
BEAM 3	118.0000	116.5163	117.6667
BEAM 4	118.0000	116.5163	117.6667
BEAM 5	118.0000	116.5163	117.6667
BEAM 6	118.0000	116.5163	117.6667
BEAM 7	118.0000	116.5163	117.6667

BEAM REPORT, SPANS 2 - 20

	HORIZONTAL DISTANCE C-C BENT	C-C BRG.	TRUE DISTANCE BOT. BM. FLG.
BEAM 1	118.0000	116.5833	117.6667
BEAM 2	118.0000	116.5833	117.6667
BEAM 3	118.0000	116.5833	117.6667
BEAM 4	118.0000	116.5833	117.6667
BEAM 5	118.0000	116.5833	117.6667
BEAM 6	118.0000	116.5833	117.6667
BEAM 7	118.0000	116.5833	117.6667

BEAM REPORT, SPAN 21

	HORIZONTAL DISTANCE C-C BENT	C-C BRG.	TRUE DISTANCE BOT. BM. FLG.
BEAM 1	118.0000	116.5833	117.6669
BEAM 2	118.0000	116.5833	117.6669
BEAM 3	118.0000	116.5833	117.6669
BEAM 4	118.0000	116.5833	117.6670
BEAM 5	118.0000	116.5833	117.6670
BEAM 6	118.0000	116.5833	117.6671
BEAM 7	118.0000	116.5833	117.6671

(1) BEAM REPORT, SPAN 22

	HORIZONTAL DISTANCE C-C BENT	C-C BRG.	TRUE DISTANCE BOT. BM. FLG.
BEAM 1	115.5700	114.1533	115.2431
BEAM 2	115.5700	114.1533	115.2431
BEAM 3	115.5700	114.1533	115.2431
BEAM 4	115.5700	114.1533	115.2431
BEAM 5	115.5700	114.1533	115.2431
BEAM 6	115.5700	114.1533	115.2431
BEAM 7	115.5700	114.1533	115.2431

(1) BEAM REPORT, SPAN 24

	HORIZONTAL DISTANCE C-C BENT	C-C BRG.	TRUE DISTANCE BOT. BM. FLG.
BEAM 1	119.2200	117.8033	118.8959
BEAM 2	119.2200	117.8033	118.8959
BEAM 3	119.2200	117.8033	118.8959
BEAM 4	119.2200	117.8033	118.8959
BEAM 5	119.2200	117.8033	118.8959
BEAM 6	119.2200	117.8033	118.8959
BEAM 7	119.2200	117.8033	118.8959

BEAM REPORT, SPAN 25

	HORIZONTAL DISTANCE C-C BENT	C-C BRG.	TRUE DISTANCE BOT. BM. FLG.
BEAM 1	118.0000	116.5833	117.6714
BEAM 2	118.0000	116.5833	117.6712
BEAM 3	118.0000	116.5833	117.6710
BEAM 4	118.0000	116.5833	117.6707
BEAM 5	118.0000	116.5833	117.6705
BEAM 6	118.0000	116.5833	117.6703
BEAM 7	118.0000	116.5833	117.6701

BEAM REPORT, SPAN 26

	HORIZONTAL DISTANCE C-C BENT	C-C BRG.	TRUE DISTANCE BOT. BM. FLG.
BEAM 1	118.0000	116.5833	117.6668
BEAM 2	118.0000	116.5833	117.6668
BEAM 3	118.0000	116.5833	117.6667
BEAM 4	118.0000	116.5833	117.6667
BEAM 5	118.0000	116.5833	117.6667
BEAM 6	118.0000	116.5833	117.6667
BEAM 7	118.0000	116.5833	117.6667

BEAM REPORT, SPAN 27

	HORIZONTAL DISTANCE C-C BENT	C-C BRG.	TRUE DISTANCE BOT. BM. FLG.
BEAM 1	118.0000	116.5833	117.6686
BEAM 2	118.0000	116.5833	117.6688
BEAM 3	118.0000	116.5833	117.6689
BEAM 4	118.0000	116.5833	117.6691
BEAM 5	118.0000	116.5833	117.6693
BEAM 6	118.0000	116.5833	117.6694
BEAM 7	118.0000	116.5833	117.6696

BEAM REPORT, SPAN 28

	HORIZONTAL DISTANCE C-C BENT	C-C BRG.	TRUE DISTANCE BOT. BM. FLG.
BEAM 1	118.0000	116.5833	117.6750
BEAM 2	118.0000	116.5833	117.6751
BEAM 3	118.0000	116.5833	117.6752
BEAM 4	118.0000	116.5833	117.6753
BEAM 5	118.0000	116.5833	117.6754
BEAM 6	118.0000	116.5833	117.6755
BEAM 7	118.0000	116.5833	117.6756

BEAM REPORT, SPANS 29 - 31

	HORIZONTAL DISTANCE C-C BENT	C-C BRG.	TRUE DISTANCE BOT. BM. FLG.
BEAM 1	118.0000	116.5833	117.6758
BEAM 2	118.0000	116.5833	117.6758
BEAM 3	118.0000	116.5833	117.6758
BEAM 4	118.0000	116.5833	117.6758
BEAM 5	118.0000	116.5833	117.6758
BEAM 6	118.0000	116.5833	117.6758
BEAM 7	118.0000	116.5833	117.6758

BEAM REPORT, SPAN 32

	HORIZONTAL DISTANCE C-C BENT	C-C BRG.	TRUE DISTANCE BOT. BM. FLG.
BEAM 1	118.0000	116.5163	117.6758
BEAM 2	118.0000	116.5163	117.6758
BEAM 3	118.0000	116.5163	117.6758
BEAM 4	118.0000	116.5163	117.6758
BEAM 5	118.0000	116.5163	117.6758
BEAM 6	118.0000	116.5163	117.6758
BEAM 7	118.0000	116.5163	117.6758

(1) BEAM REPORT, SPAN 23

	HORIZONTAL DISTANCE C-C BENT	C-C BRG.	TRUE DISTANCE BOT. BM. FLG.
BEAM 1	119.2100	117.7933	118.8859
BEAM 2	119.2100	117.7933	118.8859
BEAM 3	119.2100	117.7933	118.8859
BEAM 4	119.2100	117.7933	118.8859
BEAM 5	119.2100	117.7933	118.8859
BEAM 6	119.2100	117.7933	118.8859
BEAM 7	119.2100	117.7933	118.8859

STATE OF TEXAS — J. ROBERTO ARROYAVE — 44865 — REGISTERED PROFESSIONAL ENGINEER

4/8/92

APPROVED FOR CITY OF HOUSTON 9

DEPARTMENT OF PUBLIC WORKS:

Water Design — Date: 5-7-90

Water Quality — Storm Sewer — Date: 5.7.90

Assistant Director – Water Div. — Sanitary Sewer — Date: 4/7/90

Assistant Director — Director — Date: 5-31-90

OTHER DEPT'S

Traffic & Transp. — Date: 5/10/90

City Planning Dept. — Date: 5-30-90

NO.	DATE	REVISION	APPROV.
4			
3			
2			
(1)	8-11-92	REVISED SPANS 22, 23, & 24	

WEST LAKE HOUSTON PARKWAY
WEST FORK SAN JACINTO RIVER BRIDGE

FRAMING PLAN

Turner Collie & Braden Inc.
ENGINEERS • PLANNERS

Unit ARROYAVE	Scale: NONE	Date DECEMBER, 1989	
Designed EDC	Checked JRA	Job No. 62-68012-001	Contract
Drawn DDH	Approved	Sheet 23	of 41

311803

DESIGNED BEAMS (DEPRESSED STRANDS)

STRUCTURE	SPAN	BEAM NO.	* BEAM TYPE	NON-STD. STRAND PATTERN	PRESTRESSING STRANDS TOTAL NO.	TOTAL SIZE	TOTAL STRGTH.	TOTAL "e" ℄ in.	"e" END in.	DEPRESSED NO.	DEPRESSED TO	CONCRETE RELEASE STRENGTH f'ci (psi)	CONCRETE MINIMUM 28 DAY COMP. STRENGTH f'c (psi)
WEST LAKE HOUSTON PARKWAY WEST FORK SAN JACINTO RIVER BRIDGE	1-21 25-32	ALL	IV	—	66	1/2"	270K	17.72	8.99	16	A-52	6500	8210
①	22	ALL	IV	—	62	1/2"	270K	18.23	9.65	14	A-52	6300	7670
	23 & 24	ALL	IV	—	66	1/2"	270K	17.72	8.99	16	A-52	6518	8325

OPTIONAL DESIGN

DN. LOAD COMP STRESS (TOP ℄) fct (psi)	DN. LOAD TENSILE STRESS (BOTT. ℄) fcb (psi)	REQUIRED MINIMUM ULTIMATE MOMENT CAPACITY (Ft Kips)
4302	4696	7614
4113	4516	7361
4393	4782	7747

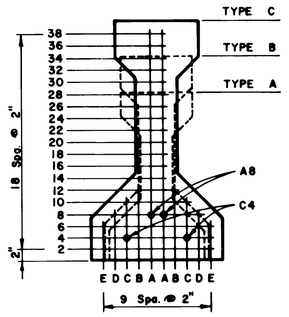

TYPES A, B, & C BMS.

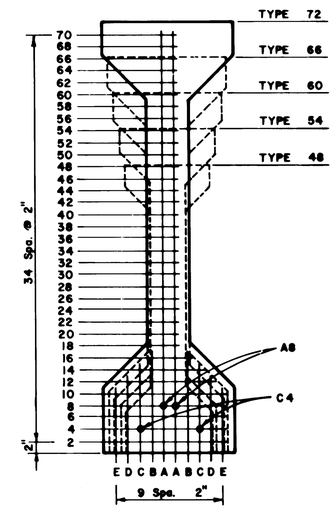

TYPES 48, 54, 60, 66 & 72 BMS.

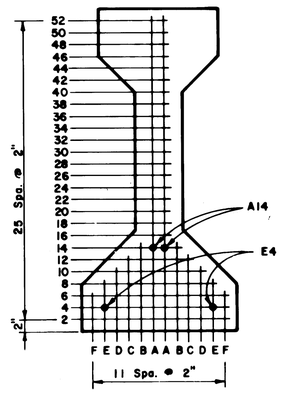

AASHTO TYPE IV BM.

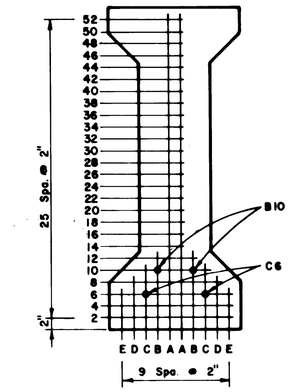

TYPE 54 (MOD.) BM.

MINIMUM NUMBER OF 1/2" STRANDS										
TYPE	A	B	C	48	54	*5M	60	66	72	IV
NO.	6	8	10	8	10	18	14	16	18	18

*5M Denotes Type 54 (MOD.) Beam.

NON – STANDARD STRAND PATTERNS	
PATTERN	STRAND ARRANGEMENT AT ℄ OF BEAM

GENERAL NOTES:

Designed in accordance with current A.A.S.H.T.O. Specifications.

All concrete shall be in accordance with Item 423.

When shown on this sheet, the fabricator has the option of furnishing either the designed depressed strand beam or an approved optional beam design.

Prestressed losses for the designed beams have been calculated according to the A.A.S.H.T.O. 1989 Specifications for a relative humidity of 75%. Optional designs shall likewise conform.

Certain beams with depressed strands are subject to cracking in the end of the beam. When such cracks occur, all subsequent beams of the same type and strand pattern shall have strands wrapped in the following manner:
1. Alternate rows of depressed strands shall be wrapped for 2 feet from each end of the beam.
2. One half of the straight strands, as nearly as possible, shall be wrapped for 4 feet from each end of the beam.
3. The wrapping pattern shall be symmetrical about the vertical axis of the beam for both depressed and straight strands.
4. Strands shall be wrapped so that the centers of gravity of the depressed strands and the straight strands will remain within 1 inch of their original location.
5. Strands shall be tightly wrapped with plastic tubing. Both ends and the seam of the tube shall be sealed with waterproof tape.

6. Revised shop drawings will not be required, but wrapping patterns, and the beams affected, shall appear on the record drawings.

For depressed strand designed beams, strands shall be located as low as possible on the 2" grid system shown hereon unless a non-standard strand pattern is indicated. Fill Row "2", then Row "4", then Row "6", etc., beginning each row in the "A" position and working outward until the required number of strands is reached. All strands in the "A" position shall be depressed, maintaining the 2" spacing so that the upper two strands are in the position shown in the table at the beam ends.

Initial pretension for 1/2" 270 K strands = 28.9 K for regular stress relieved strand or 31.0 K for low relaxation strands.
Design shown, utilizes low relaxation strands with initial pretension = 31.0 K.

REPRODUCED FROM
STATE DEPARTMENT OF HIGHWAYS
AND PUBLIC TRANSPORTATION
PRESTRESSED CONCRETE BEAMS
(NON-STANDARD SPANS)
GpNS REV. 5-84

NO.	DATE	REVISION	APPROV.
4			
3			
2			
①	8-11-92	REVISED BEAM SPANS	

WEST LAKE HOUSTON PARKWAY
WEST FORK SAN JACINTO RIVER BRIDGE

PRESTRESSED BEAM DETAILS

1 OF 2

Turner Collie & Braden Inc.
ENGINEERS • PLANNERS

Unit ARROYAVE	Scale N.T.S.	Date JANUARY,1990
Designed DJL	Checked TAG	Job No.62-68012-001 Contract
Drawn THD	Approved	Sheet 24 of 41

J. ROBERTO ARROYAVE 44995 REGISTERED PROFESSIONAL ENGINEER STATE OF TEXAS

4/18/90

211983

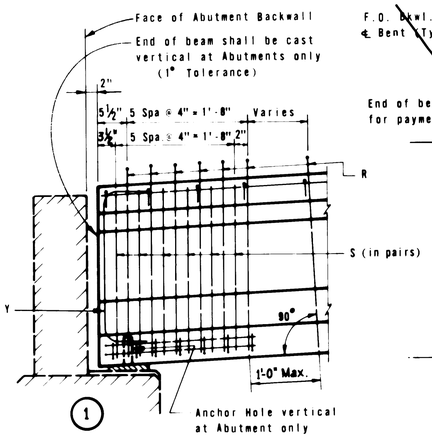

1 ELEV. OF BM. AT ABUTMENT

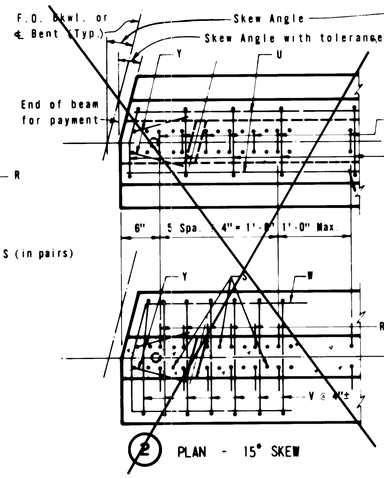

2 PLAN - 15° SKEW

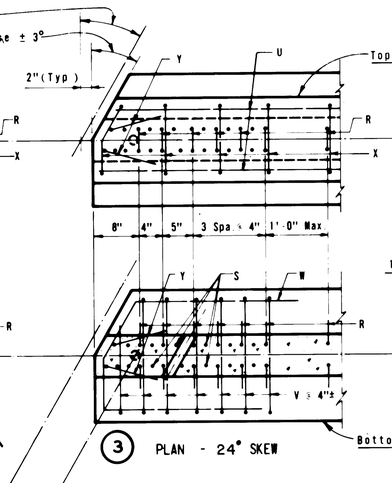

3 PLAN - 24° SKEW

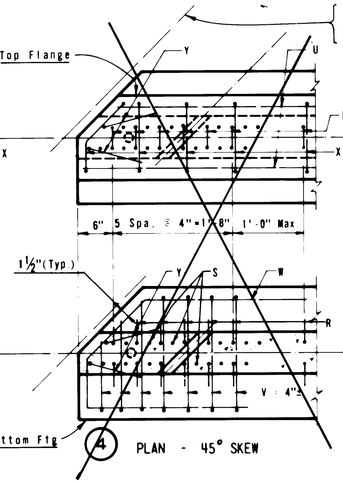

4 PLAN - 45° SKEW

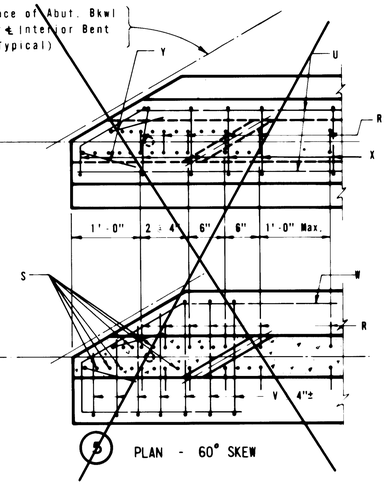

5 PLAN - 60° SKEW

NOTE

Reinforcing patterns shown above are to be used as guides in determining the reinforcement for the actual beam type and skew angle used. In general the distances between consecutive Bars R and or S shall be 2". This spacing may be varied in order to avoid diafram holes, however a minimum cross sectional area equivalent to that of Bars R and S in square beam end shall be provided.

NOTE:
It is permissible for bars or strands to come in contact with materials used in forming anchor and diafram holes.

DETAILS OF SKEWED BEAM ENDS

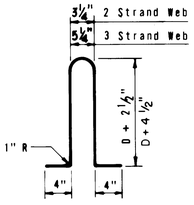

BARS R ~ #4

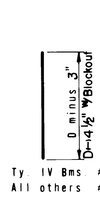

Ty IV Bms #7
All others #5

BARS S

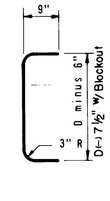

BARS Y ~ #6

Splices permitted (40' Min. C-C Splices)
No portion of bar less than 10'

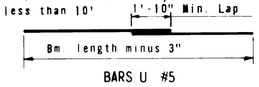

BARS U #5

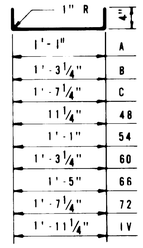

BARS V ~ #3

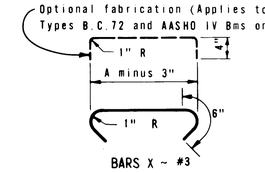

BARS X ~ #3

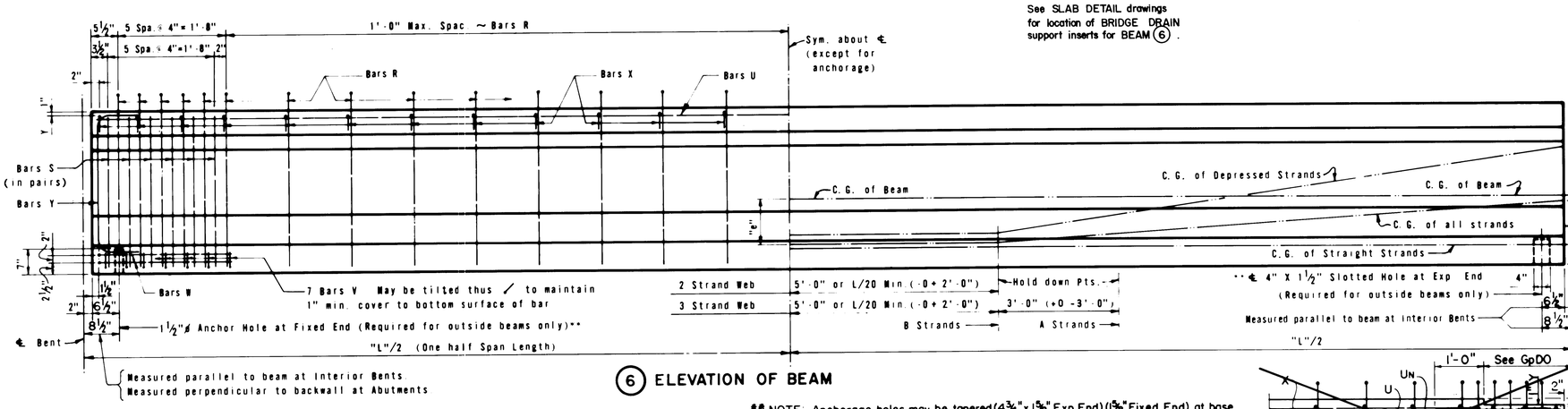

6 ELEVATION OF BEAM

NOTE: Width tolerance for Bars V = ±1/4"

BARS W ~ #5

NOTE: All reinforcing bars for beams shall be ASTM Grade 60 steel.

GENERAL NOTES:

Designed in accordance with current A.A.S.H.O. Specifications.

All concrete shall be in accordance with Item 423.

Bottom corners of all beam flanges and outside corners of exterior beam ends shall be chamfered ¾" or rounded to a ¾" radius.

** NOTE: Anchorage holes may be tapered (4¾" x 1⅝" Exp End) (⅝" Fixed End) at base. If holes are formed with sheet metal, forms may be left in place. Holes at fixed end may extend full depth of beam. Plug top or fill with asphalt mastic. At the option of the Fabricator, inside beams may be furnished with anchor holes.

See BRIDGE LAYOUTS for location of Expansion (E) and Fixed (F) ends of beams.

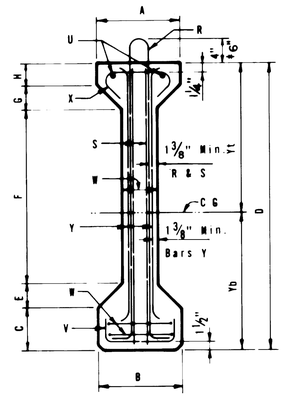

7 TYPES 48, 54, 60, 66 & 72 BEAMS

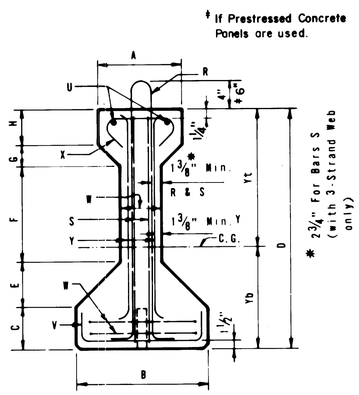

8 TYPES A, B, C, & A.A.S.H.O. IV BMS.

BEAM TYPE	A IN.	B IN	C IN	D IN.	E IN.	F IN.	G IN.	H IN	J IN.	K IN.	W IN.	Yt IN.	Yb IN.	AREA IN.²	I IN.⁴	WT. P.L.F. LB.
A	12	16	5	28	5	11	3	4	13	15	6	15.39	12.61	275.4	22.658	287
B	12	18	6	34	5¾	14	2¾	5½	17	15	6½	19.07	14.93	360.3	43.177	375
C	14	22	7	40	7½	16	3½	6	21	15	7	22.91	17.09	494.9	82.602	516
48	14	14	7	48	4	29½	4	3½	31	15	6	25.13	22.87	403.4	101.950	420
54	16	16	8	54	5	32	5	4	35	15	6	28.47	25.53	493.4	164.022	514
60	18	18	9	60	5½	35½	5½	4½	39	15	7	31.59	28.41	628.4	255.319	655
66	20	20	10	66	6½	38	6½	5	43	15	7	34.93	31.07	740.9	374.688	772
72	22	22	11	72	7½	40½	7½	5½	47	15	7	38.27	33.73	863.4	532.060	899
IV	20	26	8	54	9	23	6	8	33	18	8	29.25	24.75	788.4	260.403	821

Tolerance for Dimensions J & K = (+½"; -1")

REPRODUCED FROM
TEXAS HIGHWAY DEPARTMENT
BRIDGE DIVISION
PRESTRESSED CONCRETE BEAMS
BEAMS DETAILS GpA-2 REV. 2-86

NO.	DATE	REVISION	APPROV.
4			
3			
2			
1			

WEST LAKE HOUSTON PARKWAY
WEST FORK SAN JACINTO RIVER BRIDGE

PRESTRESSED BEAM DETAILS

2 OF 2

STATE OF TEXAS — J. ROBERTO ARROYAVE — 44865 — REGISTERED PROFESSIONAL ENGINEER

j. Roberto Arroyave 4/18/90

Turner Collie & Braden Inc.
ENGINEERS • PLANNERS

Unit ARROYAVE	Scale N.T.S.	Date JANUARY,1990
Designed DJL	Checked TAG	Job No.62-68012-001Contract
Drawn THD	Approved	Sheet 25 of 41

31683

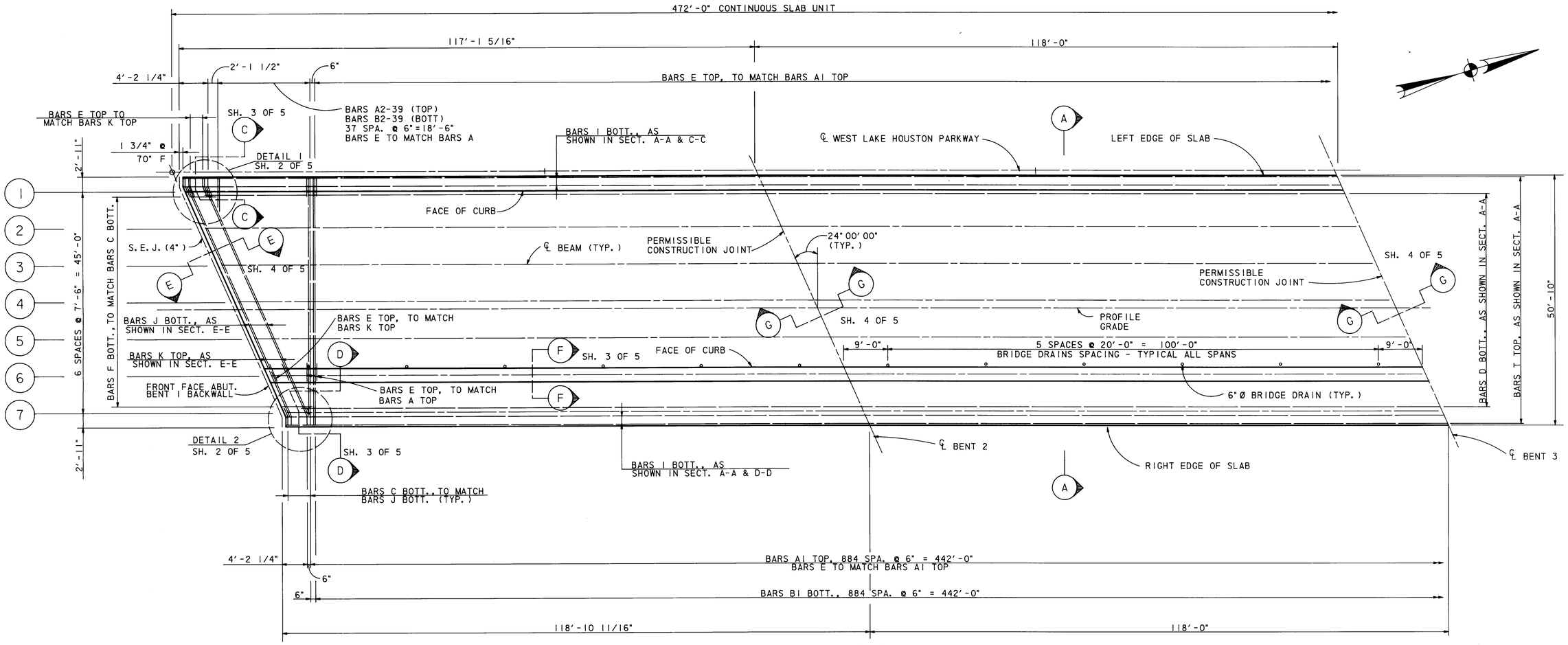

PLAN
SCALE : 1"=10'-0"
(SPANS 1-4 SHOWN)
(SPANS 29-32 OPPOSITE HAND)

NOTE: SEE SLAB DETAILS SHEET 5 OF 5 FOR NOTES.

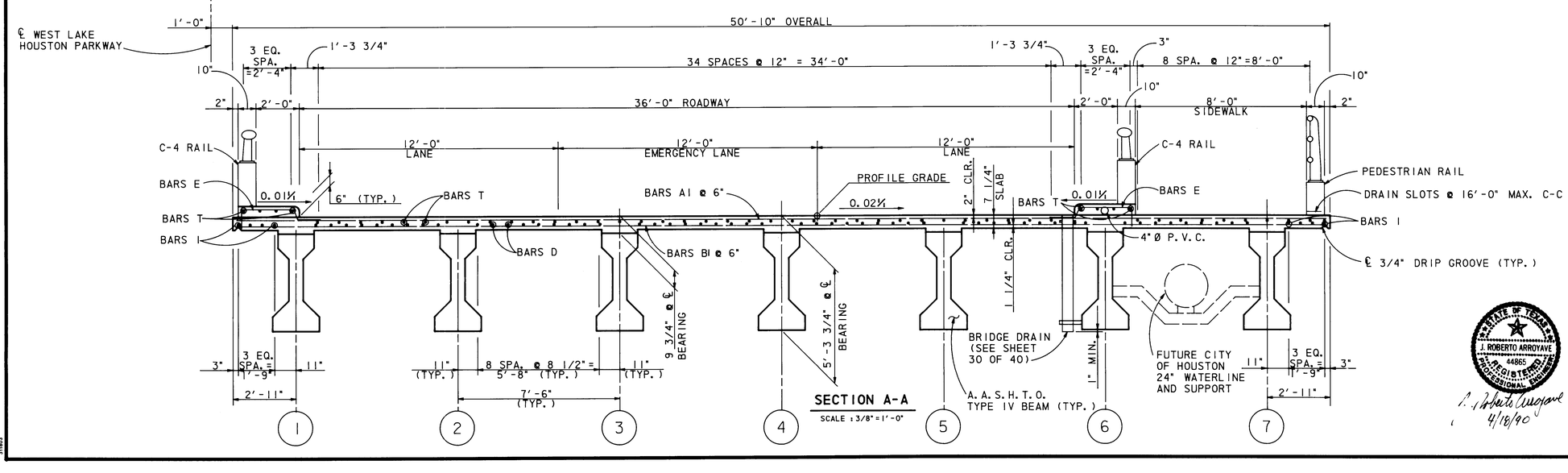

SECTION A-A
SCALE : 3/8"=1'-0"

APPROVED FOR CITY OF HOUSTON 9

DEPARTMENT OF PUBLIC WORKS:

Water Design	Paving
Water Quality	Storm Sewer
Assist.- Dir. Water Div.	Sanitary Sewer
Assistant Director	Director
Date: 5-31-90	
OTHER DEPT'S	
Traffic & Transp.	City Planning Dept:

NO.	DATE	REVISION	APPROV.
4			
3			
2			
1			

WEST LAKE HOUSTON PARKWAY
WEST FORK SAN JACINTO RIVER BRIDGE

SLAB DETAILS

1 OF 5

Turner Collie & Braden Inc.
ENGINEERS • PLANNERS

Unit ARROYAVE	Scale: AS SHOWN	Date NOVEMBER, 1989	
Designed DJL	Checked EDC	Job No.62-68012-001 Contract	
Drawn DDH	Approved	Sheet 26 of 41	

STATE OF TEXAS
J. ROBERTO ARROYAVE
44865
REGISTERED PROFESSIONAL ENGINEER
4/18/90

319803

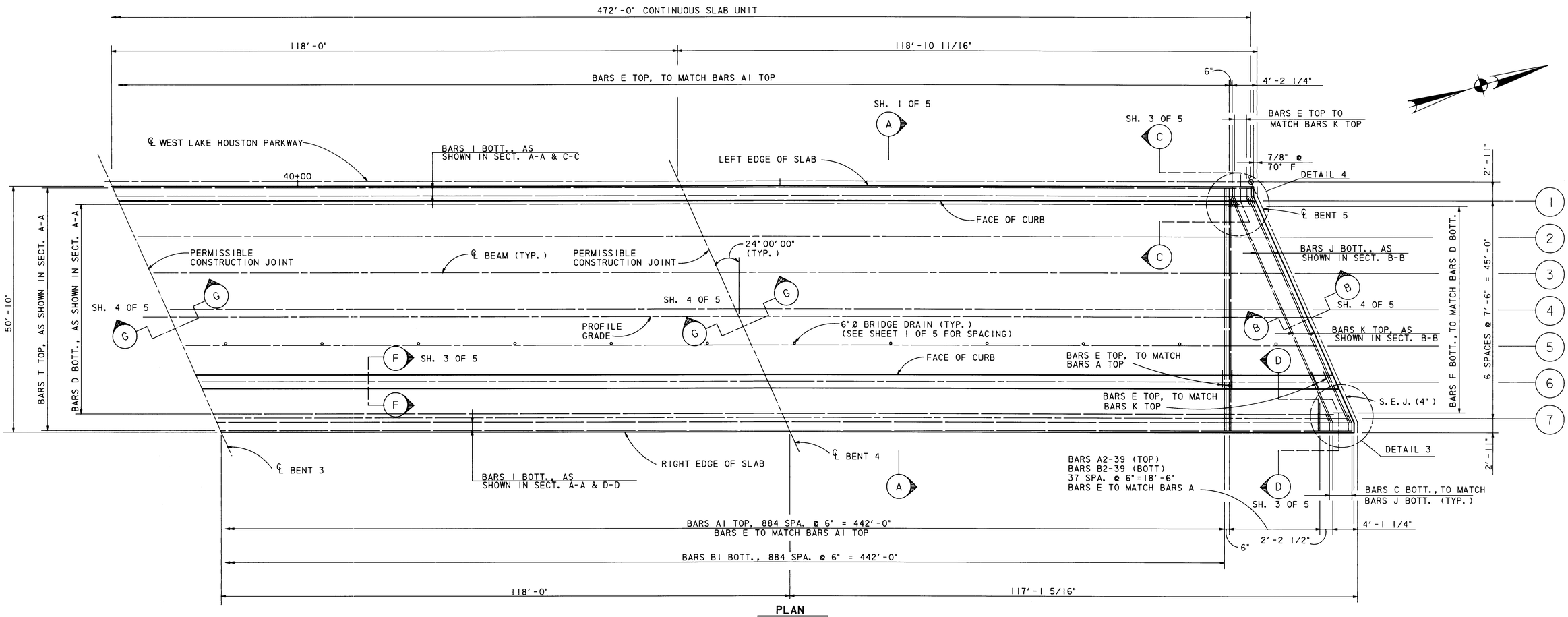

PLAN
SCALE : 1" = 10'-0"
(SPANS 1-4 SHOWN)
(SPANS 29-32 OPPOSITE HAND)

NOTE: SEE SLAB DETAILS SHEET 5 OF 5 FOR NOTES AND BRIDGE DRAIN DETAILS.

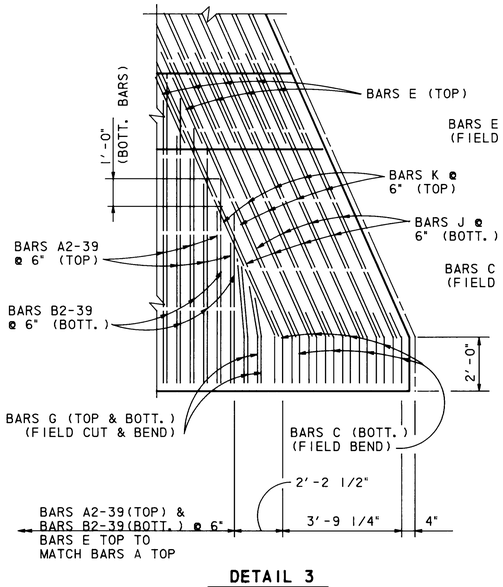

DETAIL 3
SCALE: 3/8" = 1'-0"

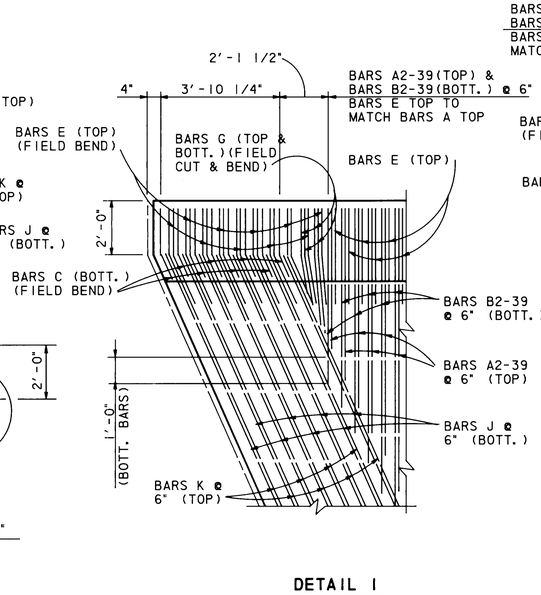

DETAIL 1
SCALE: 3/8" = 1'-0"

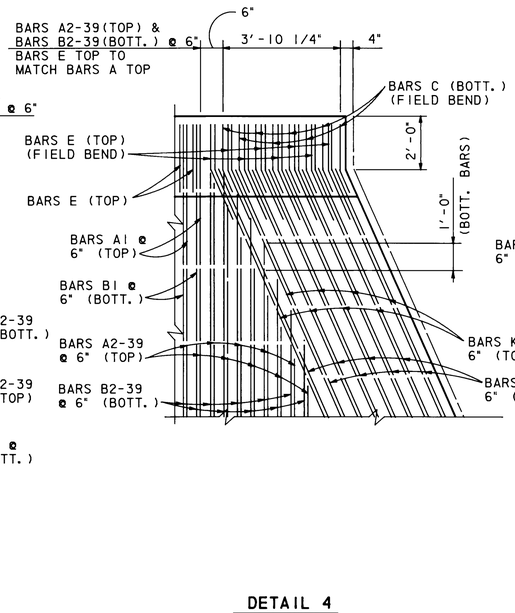

DETAIL 4
SCALE: 3/8" = 1'-0"

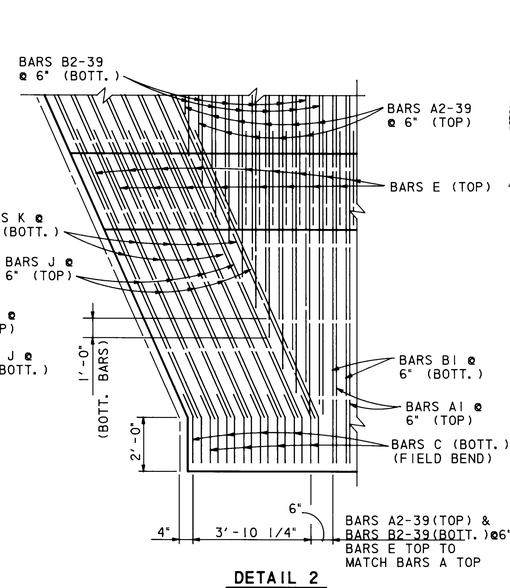

DETAIL 2
SCALE: 3/8" = 1'-0"

APPROVED FOR CITY OF HOUSTON 9
DEPARTMENT OF PUBLIC WORKS:

Water Design	Paving
Water Quality	Storm Sewer
Asslst.- Dir. Water Div.	Sanitary Sewer
Assistant Director	Director
Date:	5-31-90
OTHER DEPT'S - Traffic & Transp.	City Planning Dept.

STATE OF TEXAS J. ROBERTO ARROYAVE 44865 REGISTERED PROFESSIONAL ENGINEER
4/18/90

NO.	DATE	REVISION	APPROV.
4			
3			
2			
1			

WEST LAKE HOUSTON PARKWAY
WEST FORK SAN JACINTO RIVER BRIDGE

SLAB DETAILS

2 OF 5

Turner Collie & Braden Inc.
ENGINEERS • PLANNERS

Unit ARROYAVE	Scale: AS SHOWN	Date NOVEMBER, 1989	
Designed DJL	Checked EDC	Job No. 62-68012-001	Contract
Drawn DDH	Approved	Sheet 27	of 41

311803

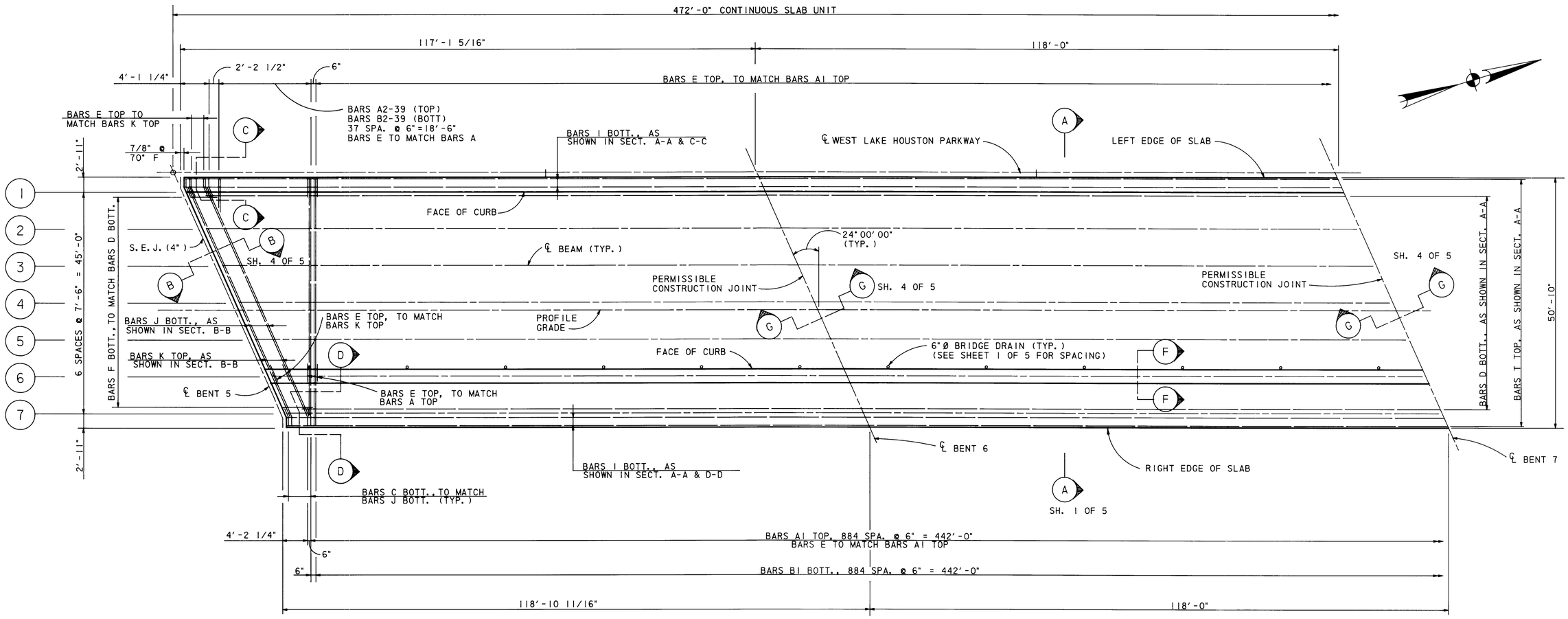

PLAN
SCALE : 1"=10'-0"
(SPANS 5-8 SHOWN)
(SPANS 9-28 SIMILAR)

NOTE: SEE SLAB DETAILS SHEET 5 OF 5 FOR NOTES AND BRIDGE DRAIN DETAILS.

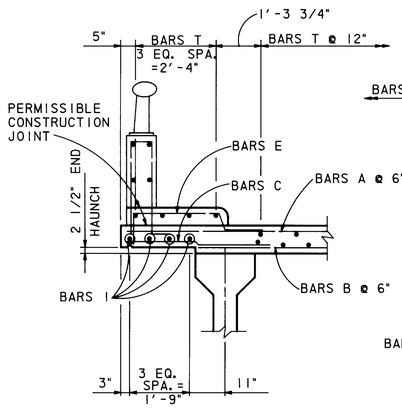

SECTION C-C
SCALE : 1/2"=1'-0"

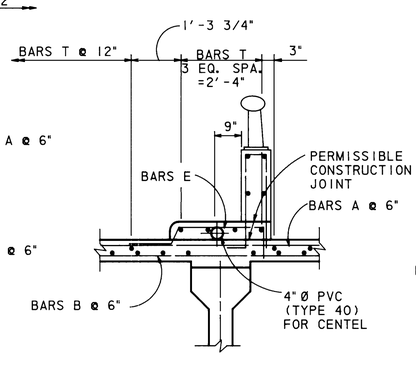

SECTION F-F
SCALE : 1/2"=1'-0"

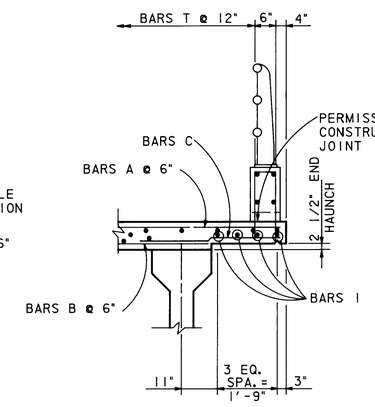

SECTION D-D
SCALE : 1/2"=1'-0"

6'-2 1/8"	A 2
47'-11"	A 39
27'-0 1/2"	A 2-39(AVG.)

BARS A
N.T.S.

7'-2 1/8"	B 2
48'-11"	B 39
28'-0 1/2"	B 2-39(AVG.)

BARS B
N.T.S.

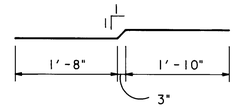

BARS C
N.T.S.

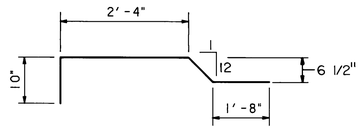

BARS E
N.T.S.

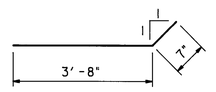

BARS F
N.T.S.

APPROVED FOR CITY OF HOUSTON
DEPARTMENT OF PUBLIC WORKS:

Water Design	5-9-90	Paving	
Water Quality		Storm Sewer	5.7.90
Asslst. Dir. Water Div.	5-17-90	Sanitary Sewer	5/17/90
Assistant Director		Director	5-31-90
Date:			

OTHER DEPT'S
Traffic & Transp. — City Planning Dept.

NO.	DATE	REVISION	APPROV.
4			
3			
2			
1			

WEST LAKE HOUSTON PARKWAY
WEST FORK SAN JACINTO RIVER BRIDGE

SLAB DETAILS

3 OF 5

Turner Collie & Braden Inc.
ENGINEERS • PLANNERS

Unit ARROYAVE	Scale: AS SHOWN	Date NOVEMBER, 1989	
Designed DJL	Checked EDC	Job No.62-68012-001 Contract	
Drawn DDH	Approved	Sheet 28 of 41	

J. ROBERTO ARROYAVE 44865 REGISTERED PROFESSIONAL ENGINEER STATE OF TEXAS

311803

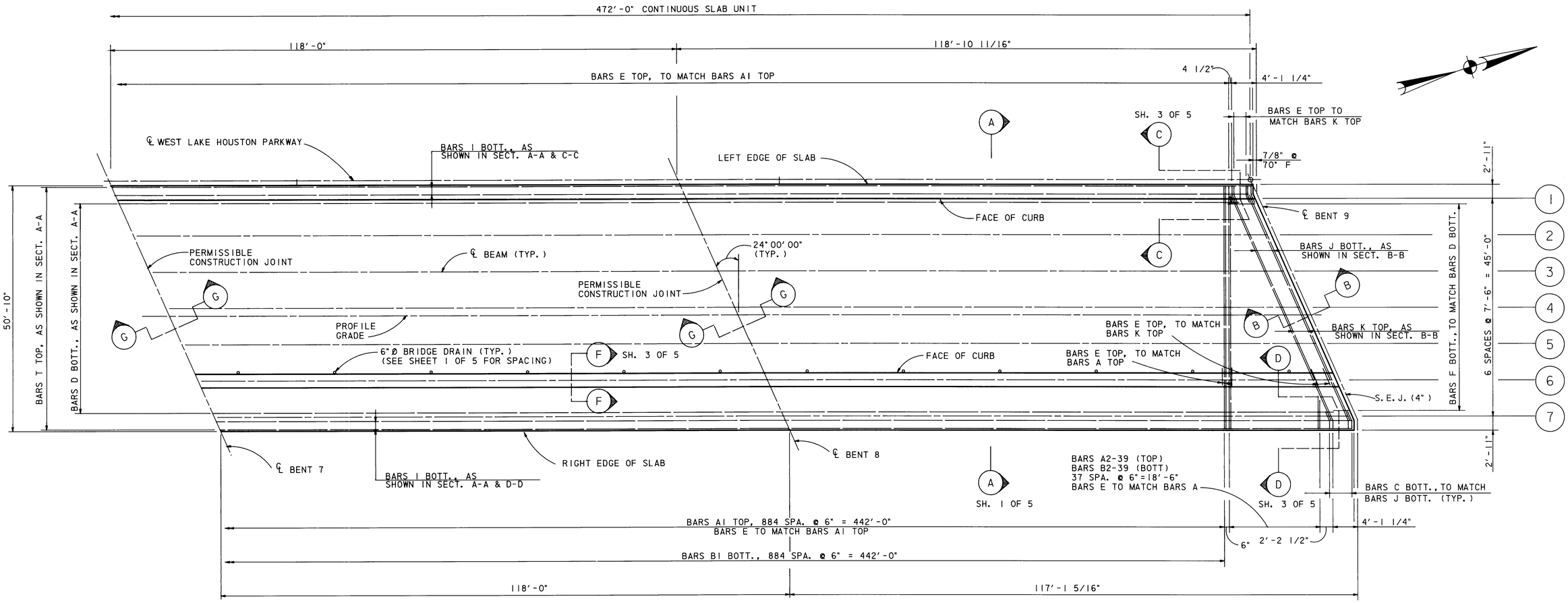

PLAN
SCALE : 1"=10'-0"

(SPANS 5-8 SHOWN)
(SPANS 9-28 SIMILAR)

NOTE: SEE SLAB DETAILS SHEET 5 OF 5 FOR NOTES AND BRIDGE DRAIN DETAILS.

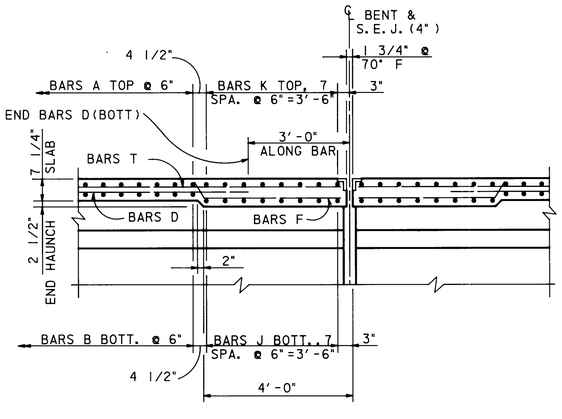

SECTION B-B
SCALE : 1/2"=1'-0"

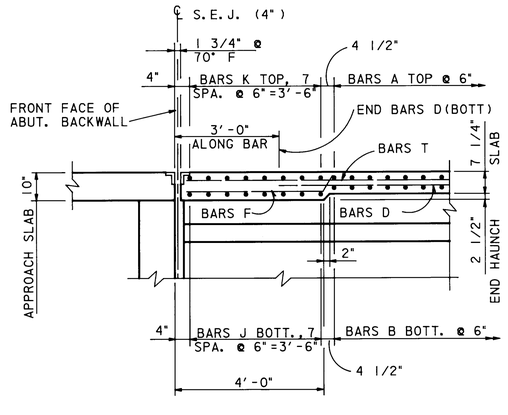

SECTION E-E
SCALE : 1/2"=1'-0"

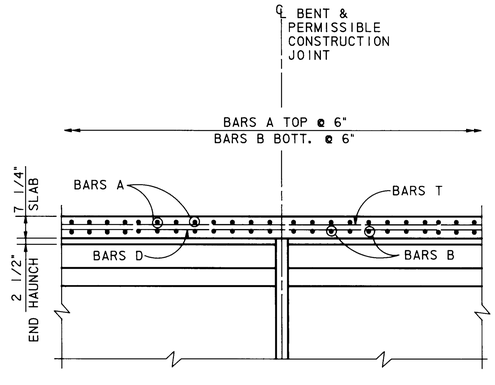

SECTION G-G
SCALE : 1/2"=1'-0"

STATE OF TEXAS
J. ROBERTO ARROYAVE
44865
REGISTERED PROFESSIONAL ENGINEER

J. Roberto Arroyave
4/10/90

APPROVED FOR CITY OF HOUSTON 9
DEPARTMENT OF PUBLIC WORKS:

D. Seidore 5-9-90 Water Design	Paving
Water Quality	Storm Sewer 5.7.90
Assist.- Dir. Water Div.	Sanitary Sewer 5/7/90
Assistant Director 5-17-90	Director
Date:	5-31-90

OTHER DEPT'S
Traffic & Transp. 5/10/90 — City Planning Dept. 5-30-90

NO.	DATE	REVISION	APPROV.
4			
3			
2			
1			

WEST LAKE HOUSTON PARKWAY
WEST FORK SAN JACINTO RIVER BRIDGE

SLAB DETAILS

4 OF 5

Turner Collie & Braden Inc.
ENGINEERS • PLANNERS

Unit	ARROYAVE	Scale:	AS SHOWN	Date	NOVEMBER, 1989
Designed	DJL	Checked	EDC	Job No.	62-68012-001 Contract
Drawn	DDH	Approved		Sheet	29 of 41

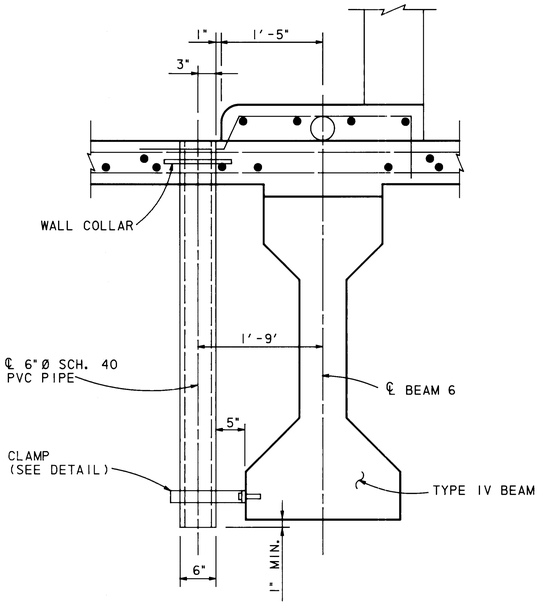

BRIDGE DRAIN DETAIL

SCALE: 1" = 1'-0"

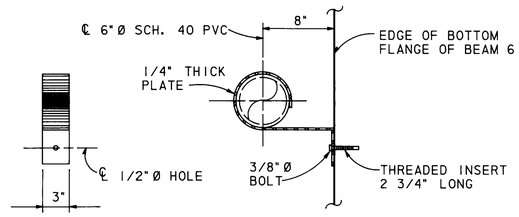

STEEL CLAMP DETAILS

SCALE: 1 1/2" = 1'-0"

BILL OF REINFORCING STEEL

	BAR	NO.	SIZE	SPACING	LENGTH	WEIGHT
	A1	7,080	#5	SHOWN	50'-6"	372,914
	A2-39	608	#5		27'-1"	17,175
					(AVG.)	
	B1	7,080	#5		50'-6"	372,914
	B2-39	608	#5		28'-1"	17,809
					(AVG.)	
	C	256	#5		3'-10"	1,024
*	D	432	#5		477'-8"	215,225
1	E	15,096	#5		5'-5"	85,287
	F	864	#5		4'-3"	3,830
	G	64	#5		5'-0"	334
*	I	64	#5		477'-8"	31,885
	J	128	#5		51'-3"	6,842
	K	128	#5		51'-3"	6,842
*	T	400	#5	SHOWN	477'-8"	199,283
1					TOTAL	1,331,364

ESTIMATED QUANTITIES

	ITEM	UNIT	QUANTITY
1 ⊡	REINFORCING STEEL	LBS.	1,331,364
1 ⊡	CL. B-1 CONC. (DECK)	C.Y.	4,871.6
	TY. IV PRESTR. CONC. BEAMS	L.F.	26,357
	SEALED EXPANSION JT. (4")	L.F.	488.8
	TY. C-4 TRAFFIC RAIL	L.F.	7,648.0
	PEDESTRIAN RAIL	L.F.	3,881.0
	PVC PIPE (4"Ø)	L.F.	3,881.0
1	CL.-B-1 CONC. (DECK)	S.Y.	21,327.4

* INCLUDES 7~1'-8" LAPS.

⊡ FOR CONTRACTOR'S INFORMATION ONLY.

NOTES:

1. ALL CONCRETE SHALL BE CLASS B-1.
2. ALL REINFORCING STEEL SHALL BE ASTM A-615, GRADE 60.
3. MININMUM RATE OF CONCRETE PLACEMENT SHALL BE 40 C.Y. PER HOUR IF CONTINUOUS PLACEMENT IS USED.

BRIDGE DRAIN NOTES:

1. FOR BRIDGE DRAIN SPACING SEE SHEET 1 OF 5 (26 OF 40).
2. ADJUST DECK REINFORCING TO MISS DRAIN; DO NOT CUT OR OMIT ANY REINFORCING BARS.
3. BOLTS SHALL MEET THE REQUIREMENTS OF ANSI B18.2.1.
4. ALL CLAMPS TO BE ASTM A36 STEEL. ALL CLAMPS AND BOLTS TO BE GALVANIZED.
5. COST OF STEEL CLAMPS, BOLTS AND THREADED INSERTS TO BE INCIDENTAL TO THE BRIDGE DRAIN ITEM.

APPROVED FOR CITY OF HOUSTON 9

DEPARTMENT OF PUBLIC WORKS:

D. Leadore 5-9-90 — Water Design
Water Quality
Assist.- Dir. Water Div.
Bill Deschner 5-17-90
Assistant Director
Date:
Paving
Storm Sewer 5/7/90
Sanitary Sewer
Director 5-31-90

OTHER DEPT'S

Traffic & Transp. 5/10/90
City Planning Dept.

NO.	DATE	REVISION	APPROV.
4			
3			
2			
1	2-28-91	BASIS OF PAYMENT & QUANTITY REVISION PER ADDENDUM # 1	

WEST LAKE HOUSTON PARKWAY
WEST FORK SAN JACINTO RIVER BRIDGE

SLAB DETAILS

5 OF 5

STATE OF TEXAS
J. ROBERTO ARROYAVE
44865
REGISTERED PROFESSIONAL ENGINEER

J. Roberto Arroyave
4/18/90

Turner Collie & Braden Inc.
ENGINEERS • PLANNERS

Unit	ARROYAVE	Scale:	AS SHOWN	Date	NOVEMBER, 1989
Designed	DJL	Checked	EDC	Job No.	62-68012-001 Contract
Drawn	DDH	Approved		Sheet	30 of 41

ADDENDUM # 1

SLAB ELEVATIONS

SPAN	PT. NO.	LEFT SLAB LINE	BEAM 1	BEAM 2	BEAM 3	BEAM 4	P.G. LINE	BEAM 5	BEAM 6	BEAM 7	RIGHT SLAB LINE
1	1	59.292	59.235	59.088	58.941	58.795	58.764	58.648	58.501	58.355	58.298
	2	59.321	59.264	59.117	58.970	58.824	58.793	58.677	58.530	58.384	58.327
	3	59.350	59.293	59.146	59.000	58.853	58.822	58.706	58.560	58.413	58.356
	4	59.379	59.322	59.175	59.029	58.882	58.851	58.735	58.589	58.442	58.385
	5	59.408	59.351	59.205	59.058	58.911	58.880	58.765	58.618	58.471	58.414
2	1	59.410	59.353	59.206	59.059	58.913	58.882	58.766	58.619	58.473	58.416
	2	59.439	59.382	59.235	59.089	58.942	58.911	58.795	58.649	58.502	58.445
	3	59.468	59.411	59.264	59.118	58.971	58.940	58.824	58.678	58.531	58.474
	4	59.497	59.440	59.294	59.147	59.000	58.969	58.854	58.707	58.560	58.503
	5	59.526	59.469	59.323	59.176	59.029	58.998	58.883	58.736	58.589	58.532
3	1	59.528	59.471	59.324	59.178	59.031	59.000	58.884	58.738	58.591	58.534
	2	59.557	59.500	59.353	59.207	59.060	59.029	58.913	58.767	58.620	58.563
	3	59.586	59.529	59.383	59.236	59.089	59.058	58.943	58.796	58.649	58.592
	4	59.615	59.558	59.412	59.265	59.118	59.087	58.972	58.825	58.678	58.621
	5	59.645	59.588	59.441	59.294	59.148	59.117	59.001	58.854	58.708	58.651
4	1	59.646	59.589	59.442	59.296	59.149	59.118	59.002	58.856	58.709	58.652
	2	59.675	59.618	59.472	59.325	59.178	59.147	59.032	58.885	58.738	58.681
	3	59.704	59.647	59.501	59.354	59.207	59.176	59.061	58.914	58.767	58.710
	4	59.734	59.677	59.530	59.383	59.237	59.206	59.090	58.943	58.797	58.740
	5	59.763	59.706	59.559	59.412	59.266	59.235	59.119	58.973	58.826	58.769
5	1	59.764	59.707	59.561	59.414	59.267	59.236	59.121	58.974	58.827	58.770
	2	59.793	59.736	59.590	59.443	59.296	59.265	59.150	59.003	58.856	58.799
	3	59.823	59.766	59.619	59.472	59.326	59.295	59.179	59.032	58.886	58.829
	4	59.852	59.795	59.648	59.501	59.355	59.324	59.208	59.062	58.915	58.858
	5	59.881	59.824	59.677	59.531	59.384	59.353	59.237	59.091	58.944	58.887
6	1	59.882	59.825	59.679	59.532	59.385	59.354	59.239	59.092	58.945	58.888
	2	59.912	59.855	59.708	59.561	59.415	59.384	59.268	59.121	58.975	58.918
	3	59.941	59.884	59.737	59.590	59.444	59.413	59.297	59.151	59.004	58.947
	4	59.970	59.913	59.766	59.620	59.473	59.442	59.326	59.180	59.033	58.976
	5	59.999	59.942	59.796	59.649	59.502	59.471	59.356	59.209	59.062	59.005
7	1	60.001	59.944	59.797	59.650	59.504	59.473	59.357	59.210	59.064	59.007
	2	60.030	59.973	59.826	59.679	59.533	59.502	59.386	59.239	59.093	59.036
	3	60.059	60.002	59.855	59.709	59.562	59.531	59.415	59.269	59.122	59.065
	4	60.088	60.031	59.885	59.738	59.591	59.560	59.445	59.298	59.151	59.094
	5	60.117	60.060	59.914	59.767	59.620	59.589	59.474	59.327	59.180	59.123
8	1	60.119	60.062	59.915	59.768	59.622	59.591	59.475	59.329	59.182	59.125
	2	60.148	60.091	59.944	59.798	59.651	59.620	59.504	59.358	59.211	59.154
	3	60.177	60.120	59.974	59.827	59.680	59.649	59.534	59.387	59.240	59.183
	4	60.206	60.149	60.003	59.856	59.709	59.678	59.563	59.416	59.269	59.212
	5	60.236	60.179	60.032	59.885	59.739	59.708	59.592	59.445	59.299	59.242
9	1	60.237	60.180	60.033	59.887	59.740	59.709	59.593	59.447	59.300	59.243
	2	60.266	60.209	60.063	59.916	59.769	59.738	59.623	59.476	59.329	59.272
	3	60.295	60.238	60.092	59.945	59.798	59.767	59.652	59.505	59.358	59.301
	4	60.325	60.268	60.121	59.974	59.828	59.797	59.681	59.534	59.388	59.331
	5	60.354	60.297	60.150	60.003	59.857	59.826	59.710	59.563	59.417	59.360
10	1	60.355	60.298	60.152	60.005	59.858	59.827	59.712	59.565	59.418	59.361
	2	60.384	60.327	60.181	60.034	59.887	59.856	59.741	59.594	59.447	59.390
	3	60.414	60.357	60.210	60.063	59.917	59.886	59.770	59.623	59.477	59.420
	4	60.443	60.386	60.239	60.092	59.946	59.915	59.799	59.652	59.506	59.449
	5	60.472	60.415	60.268	60.122	59.975	59.944	59.828	59.682	59.535	59.478
11	1	60.473	60.416	60.270	60.123	59.976	59.945	59.830	59.683	59.536	59.479
	2	60.503	60.446	60.299	60.152	60.006	59.975	59.859	59.712	59.566	59.509
	3	60.532	60.475	60.328	60.181	60.035	60.004	59.888	59.741	59.595	59.538
	4	60.561	60.504	60.357	60.211	60.064	60.033	59.917	59.771	59.624	59.567
	5	60.590	60.533	60.386	60.240	60.093	60.062	59.946	59.800	59.653	59.596
12	1	60.592	60.535	60.388	60.241	60.095	60.064	59.948	59.801	59.655	59.598
	2	60.621	60.564	60.417	60.270	60.124	60.093	59.977	59.830	59.684	59.627
	3	60.650	60.593	60.446	60.300	60.153	60.122	60.006	59.860	59.713	59.656
	4	60.679	60.622	60.475	60.329	60.182	60.151	60.036	59.889	59.742	59.685
	5	60.708	60.651	60.505	60.358	60.211	60.180	60.065	59.918	59.771	59.714
13	1	60.710	60.653	60.506	60.359	60.213	60.182	60.066	59.919	59.773	59.716
	2	60.739	60.682	60.535	60.389	60.242	60.211	60.095	59.949	59.802	59.745
	3	60.768	60.711	60.564	60.418	60.271	60.240	60.124	59.978	59.831	59.774
	4	60.797	60.740	60.594	60.447	60.300	60.269	60.154	60.007	59.860	59.803
	5	60.827	60.770	60.623	60.476	60.330	60.299	60.183	60.036	59.890	59.833
14	1	60.828	60.771	60.624	60.478	60.331	60.300	60.184	60.038	59.891	59.834
	2	60.857	60.800	60.653	60.507	60.360	60.329	60.213	60.067	59.920	59.863
	3	60.886	60.829	60.683	60.536	60.389	60.358	60.243	60.096	59.949	59.892
	4	60.916	60.859	60.712	60.565	60.419	60.388	60.272	60.125	59.979	59.922
	5	60.945	60.888	60.741	60.594	60.448	60.417	60.301	60.154	60.008	59.951
15	1	60.946	60.889	60.742	60.596	60.449	60.418	60.302	60.156	60.009	59.952
	2	60.975	60.918	60.772	60.625	60.478	60.447	60.332	60.185	60.038	59.981
	3	61.005	60.947	60.801	60.654	60.508	60.477	60.361	60.214	60.068	60.011
	4	61.034	60.977	60.830	60.683	60.537	60.506	60.390	60.243	60.097	60.040
	5	61.063	61.006	60.859	60.713	60.566	60.535	60.419	60.273	60.126	60.069
16	1	61.064	61.007	60.861	60.714	60.567	60.536	60.421	60.274	60.127	60.070
	2	61.094	61.036	60.890	60.743	60.597	60.566	60.450	60.303	60.157	60.100
	3	61.123	61.066	60.919	60.772	60.626	60.595	60.479	60.332	60.186	60.129
	4	61.152	61.095	60.948	60.802	60.655	60.624	60.508	60.362	60.215	60.158
	5	61.181	61.124	60.977	60.831	60.684	60.653	60.537	60.391	60.244	60.187

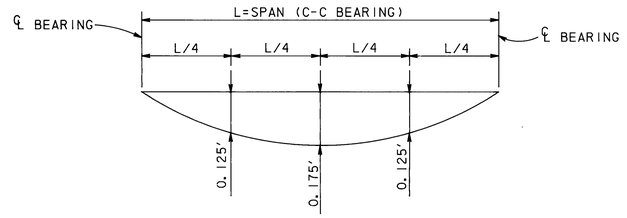

NOTE:
DEFLECTIONS DUE TO CAST IN PLACE CONCRETE ONLY. E(BEAM) = 5.16×10^6 P.S.I.

DEAD LOAD DEFLECTION DIAGRAM

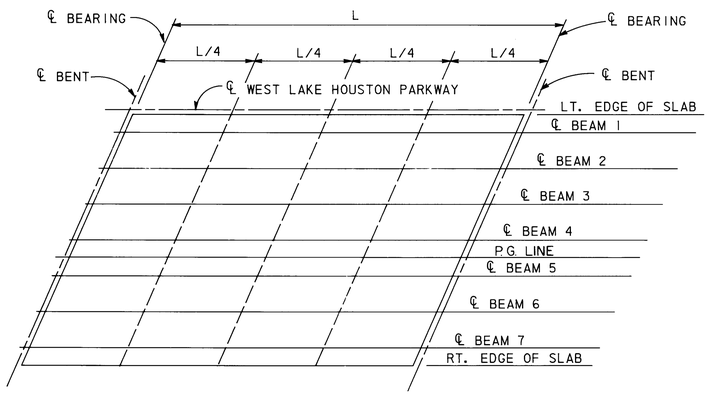

SLAB ELEVATION DIAGRAM

APPROVED FOR CITY OF HOUSTON 9

DEPARTMENT OF PUBLIC WORKS:

D. Isidore 5-9-90 Water Design	Paving
Water Quality	Storm Sewer 5-7-90
Asslst.- Dir. Water Div. D. Isidore 5-17-90	Sanitary Sewer
Assistant Director Date:	Director 5-31-90

OTHER DEPT'S

Traffic & Transp. 5/10/90 — City Planning Dept. 5-10-90

NO.	DATE	REVISION	APPROV.
4			
3			
2			
1			

WEST LAKE HOUSTON PARKWAY
WEST FORK SAN JACINTO RIVER BRIDGE

SLAB ELEVATIONS

1 OF 2

Turner Collie & Braden Inc.
ENGINEERS • PLANNERS

Unit ARROYAVE	Scale:	Date DECEMBER, 1989	
Designed EDC	Checked JRA	Job No. 62-68012-001 Contract	
Drawn DDH	Approved	Sheet 31 of 41	

STATE OF TEXAS
J. ROBERTO ARROYAVE
44865
REGISTERED
PROFESSIONAL
ENGINEER

J. Roberto Arroyave 4/18/90

211803

SLAB ELEVATIONS

SPAN	PT. NO.	LEFT SLAB LINE	BEAM 1	BEAM 2	BEAM 3	BEAM 4	P.G. LINE	BEAM 5	BEAM 6	BEAM 7	RIGHT SLAB LINE
17	1	61.183	61.125	60.979	60.832	60.686	60.655	60.539	60.392	60.246	60.189
	2	61.212	61.155	61.008	60.861	60.715	60.684	60.568	60.421	60.275	60.218
	3	61.241	61.184	61.037	60.891	60.744	60.713	60.597	60.451	60.304	60.247
	4	61.270	61.213	61.066	60.920	60.773	60.742	60.626	60.480	60.333	60.276
	5	61.299	61.242	61.096	60.949	60.802	60.771	60.656	60.509	60.362	60.305
18	1	61.301	61.244	61.097	60.950	60.804	60.773	60.657	60.510	60.364	60.307
	2	61.330	61.273	61.126	60.980	60.833	60.802	60.686	60.540	60.393	60.336
	3	61.359	61.302	61.155	61.009	60.862	60.831	60.715	60.569	60.422	60.365
	4	61.388	61.331	61.185	61.038	60.891	60.860	60.745	60.598	60.451	60.394
	5	61.417	61.360	61.214	61.067	60.920	60.890	60.774	60.627	60.481	60.423
19	1	61.419	61.362	61.215	61.069	60.922	60.891	60.775	60.629	60.482	60.425
	2	61.448	61.391	61.244	61.098	60.951	60.920	60.804	60.658	60.511	60.454
	3	61.477	61.420	61.274	61.127	60.980	60.949	60.834	60.687	60.540	60.483
	4	61.506	61.449	61.303	61.156	61.009	60.979	60.863	60.716	60.570	60.512
	5	61.536	61.479	61.332	61.185	61.039	61.008	60.892	60.745	60.599	60.542
20	1	61.537	61.480	61.333	61.187	61.040	61.009	60.893	60.747	60.600	60.543
	2	61.566	61.509	61.363	61.216	61.069	61.038	60.923	60.776	60.629	60.572
	3	61.595	61.538	61.392	61.245	61.098	61.068	60.952	60.805	60.659	60.601
	4	61.625	61.568	61.421	61.274	61.128	61.097	60.981	60.834	60.688	60.631
	5	61.654	61.597	61.450	61.304	61.157	61.126	61.010	60.864	60.717	60.660
21	1	61.655	61.598	61.452	61.305	61.158	61.127	61.012	60.865	60.718	60.661
	2	61.684	61.627	61.481	61.334	61.187	61.157	61.041	60.894	60.748	60.690
	3	61.714	61.657	61.510	61.363	61.217	61.186	61.071	60.925	60.781	60.725
	4	61.757	61.702	61.562	61.422	61.284	61.255	61.146	61.010	60.874	60.822
	5	61.870	61.819	61.687	61.556	61.426	61.399	61.297	61.169	61.042	60.993
22	1	61.877	61.826	61.695	61.564	61.435	61.407	61.306	61.179	61.052	61.003
	2	62.069	62.021	61.898	61.776	61.655	61.630	61.536	61.417	61.299	61.253
	3	62.336	62.291	62.177	62.064	61.951	61.928	61.840	61.730	61.620	61.578
	4	62.676	62.634	62.526	62.418	62.309	62.286	62.201	62.093	61.984	61.942
	5	63.040	62.998	62.890	62.782	62.673	62.650	62.565	62.457	62.348	62.306
23	1	63.058	63.016	62.908	62.799	62.691	62.668	62.583	62.474	62.366	62.324
	2	63.422	63.380	63.272	63.163	63.055	63.032	62.947	62.838	62.730	62.688
	3	63.786	63.744	63.636	63.527	63.419	63.396	63.311	63.203	63.094	63.052
	4	64.150	64.108	64.000	63.892	63.783	63.760	63.675	63.567	63.458	63.416
	5	64.514	64.472	64.364	64.256	64.147	64.125	64.039	63.931	63.822	63.780
24	1	64.532	64.490	64.382	64.273	64.165	64.142	64.057	63.948	63.840	63.798
	2	64.896	64.854	64.746	64.637	64.529	64.506	64.421	64.313	64.204	64.162
	3	65.260	65.218	65.110	65.001	64.893	64.870	64.785	64.677	64.568	64.526
	4	65.624	65.582	65.474	65.366	65.257	65.234	65.149	65.041	64.932	64.890
	5	65.988	65.946	65.838	65.729	65.620	65.597	65.510	65.399	65.287	65.244
25	1	66.006	65.964	65.856	65.747	65.637	65.614	65.526	65.415	65.304	65.260
	2	66.349	66.304	66.190	66.075	65.959	65.934	65.842	65.725	65.607	65.561
	3	66.638	66.592	66.471	66.350	66.228	66.202	66.105	65.982	65.858	65.810
	4	66.875	66.826	66.699	66.572	66.444	66.417	66.315	66.186	66.056	66.005
	5	67.058	67.007	66.874	66.741	66.607	66.579	66.472	66.337	66.201	66.148
26	1	67.066	67.014	66.881	66.748	66.614	66.585	66.479	66.343	66.206	66.153
	2	67.194	67.140	67.001	66.861	66.721	66.691	66.580	66.438	66.295	66.240
	3	67.269	67.212	67.067	66.921	66.775	66.744	66.628	66.480	66.331	66.273
	4	67.290	67.232	67.081	66.929	66.776	66.744	66.623	66.469	66.314	66.254
	5	67.259	67.198	67.041	66.883	66.724	66.691	66.565	66.405	66.244	66.181
27	1	67.256	67.195	67.038	66.879	66.720	66.687	66.561	66.400	66.239	66.177
	2	67.169	67.106	66.942	66.778	66.613	66.578	66.447	66.281	66.114	66.048
	3	67.029	66.963	66.794	66.623	66.452	66.416	66.280	66.108	65.935	65.867
	4	66.836	66.768	66.592	66.416	66.238	66.201	66.060	65.882	65.703	65.633
	5	66.590	66.519	66.337	66.155	65.972	65.933	65.788	65.603	65.418	65.345
28	1	66.577	66.506	66.324	66.141	65.957	65.918	65.773	65.588	65.402	65.330
	2	66.275	66.202	66.013	65.824	65.635	65.595	65.445	65.254	65.062	64.987
	3	65.922	65.848	65.656	65.465	65.273	65.232	65.081	64.889	64.698	64.623
	4	65.558	65.484	65.292	65.100	64.909	64.868	64.717	64.525	64.333	64.259
	5	65.194	65.119	64.928	64.736	64.544	64.504	64.353	64.161	63.969	63.895
29	1	65.176	66.506	66.324	66.141	65.957	64.486	65.773	65.588	65.402	63.877
	2	67.290	66.202	66.013	65.824	65.635	66.743	65.445	65.254	65.062	66.253
	3	65.260	65.848	65.656	65.465	65.273	64.870	65.081	64.889	64.698	64.526
	4	62.064	65.484	65.292	65.100	64.909	61.624	64.717	64.525	64.333	61.246
	5	61.536	65.119	64.928	64.736	64.544	61.008	64.353	64.161	63.969	60.542
30	1	63.702	63.627	63.435	63.244	63.052	63.011	62.860	62.668	62.477	62.402
	2	63.337	63.263	63.071	62.879	62.688	62.647	62.496	62.304	62.113	62.038
	3	62.973	62.899	62.707	62.515	62.323	62.283	62.132	61.940	61.748	61.674
	4	62.609	62.534	62.343	62.151	61.959	61.919	61.767	61.576	61.384	61.309
	5	62.245	62.170	61.978	61.787	61.595	61.554	61.403	61.212	61.020	60.945
31	1	62.227	62.152	61.961	61.769	61.577	61.537	61.386	61.194	61.002	60.927
	2	61.863	61.788	61.596	61.405	61.213	61.173	61.021	60.830	60.638	60.563
	3	61.498	61.424	61.232	61.041	60.849	60.808	60.657	60.465	60.274	60.199
	4	61.134	61.060	60.868	60.676	60.484	60.444	60.293	60.101	59.909	59.835
	5	60.770	60.695	60.504	60.312	60.120	60.080	59.929	59.737	59.545	59.471
32	1	60.752	60.678	60.486	60.294	60.103	60.062	59.911	59.719	59.527	59.453
	2	60.388	60.314	60.122	59.930	59.739	59.698	59.547	59.355	59.163	59.089
	3	60.024	59.950	59.758	59.566	59.374	59.334	59.183	58.991	58.799	58.725
	4	59.660	59.586	59.394	59.202	59.010	58.970	58.819	58.627	58.435	58.361
	5	59.296	59.222	59.030	58.838	58.646	58.606	58.455	58.263	58.071	57.997

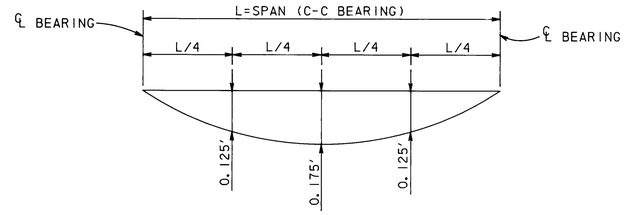

NOTE:
DEFLECTIONS DUE TO CAST IN PLACE CONCRETE ONLY. E(BEAM) = 5.16×10^6 P.S.I.

DEAD LOAD DEFLECTION DIAGRAM

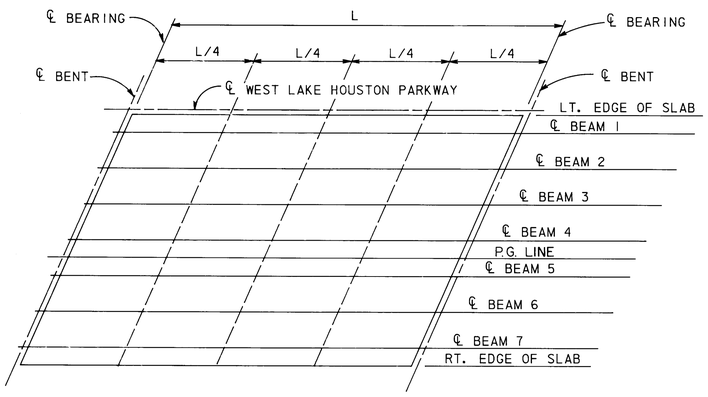

SLAB ELEVATION DIAGRAM

APPROVED FOR CITY OF HOUSTON 9

DEPARTMENT OF PUBLIC WORKS:

Water Design — Paving
Water Quality — Storm Sewer
Assist. Dir. Water Div. — Sanitary Sewer
Assistant Director — Director
Date: 5-31-90

OTHER DEPT'S
- Traffic & Transp. 5/10/90
City Planning Dept.

NO.	DATE	REVISION	APPROV.
4			
3			
2			
1			

WEST LAKE HOUSTON PARKWAY
WEST FORK SAN JACINTO RIVER BRIDGE

SLAB ELEVATIONS

2 OF 2

Turner Collie & Braden Inc.
ENGINEERS • PLANNERS

STATE OF TEXAS — J. ROBERTO ARROYAVE — 44865 — REGISTERED PROFESSIONAL ENGINEER
4/8/90

Unit ARROYAVE	Scale:	Date DECEMBER, 1989	
Designed EDC	Checked JRA	Job No. 62-68012-001	Contract
Drawn DDH	Approved	Sheet 32	of 41

311803

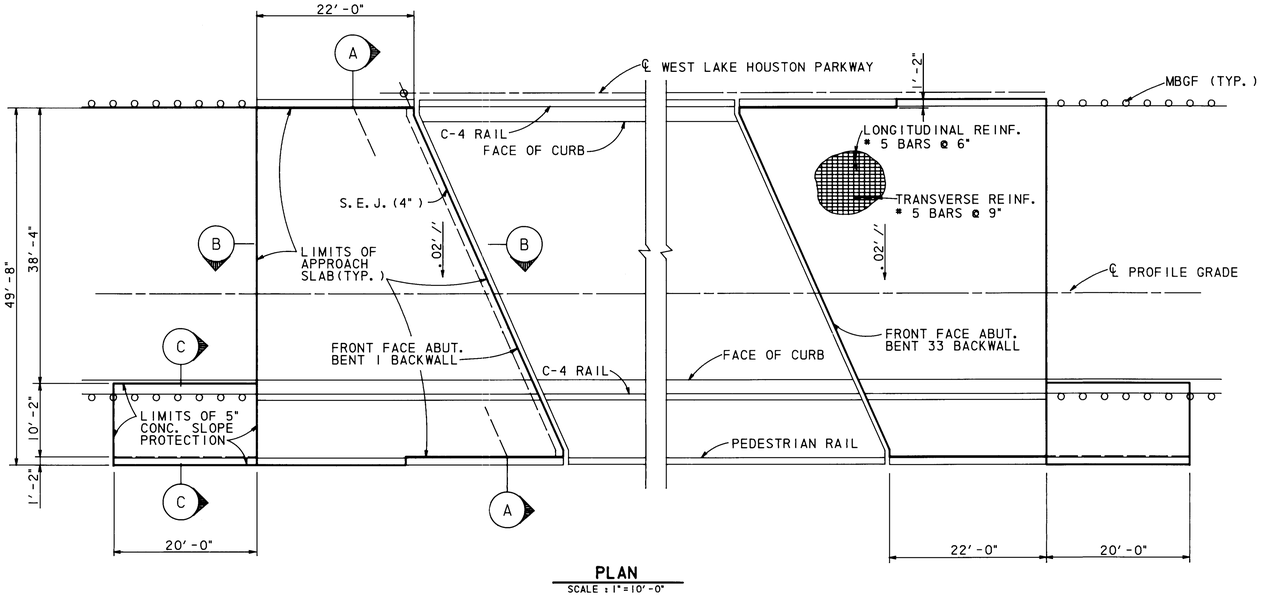

PLAN
SCALE : 1"=10'-0"

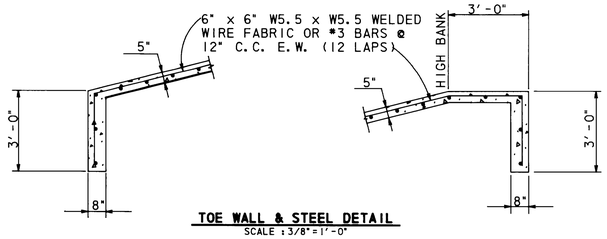

TOE WALL & STEEL DETAIL
SCALE : 3/8"=1'-0"

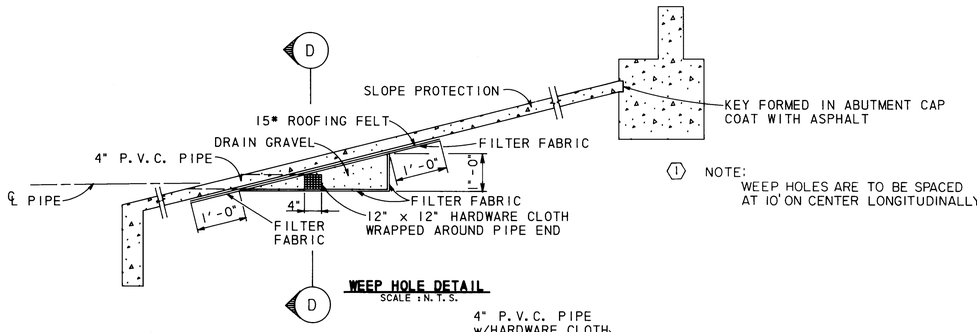

① NOTE:
WEEP HOLES ARE TO BE SPACED AT 10' ON CENTER LONGITUDINALLY.

WEEP HOLE DETAIL
SCALE : N. T. S.

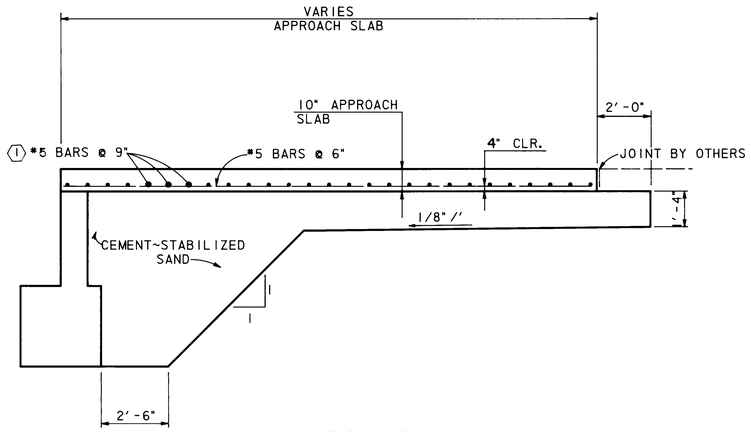

SECTION B-B
SCALE : 3/8"=1'-0"

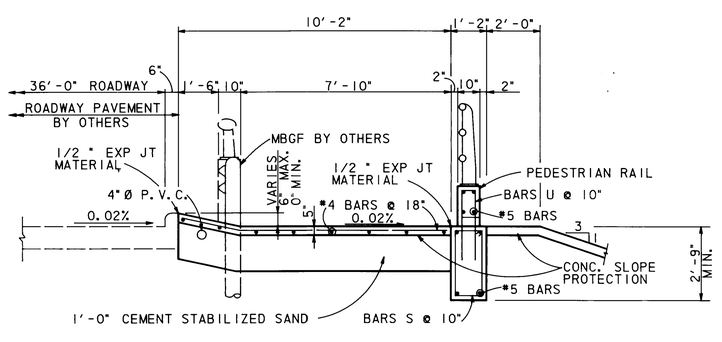

SECTION C-C
SCALE : 3/8"=1'-0"

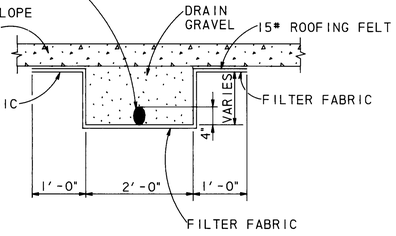

FILTER FABRIC

SECTION D-D
SCALE : 3/4" = 1'-0"

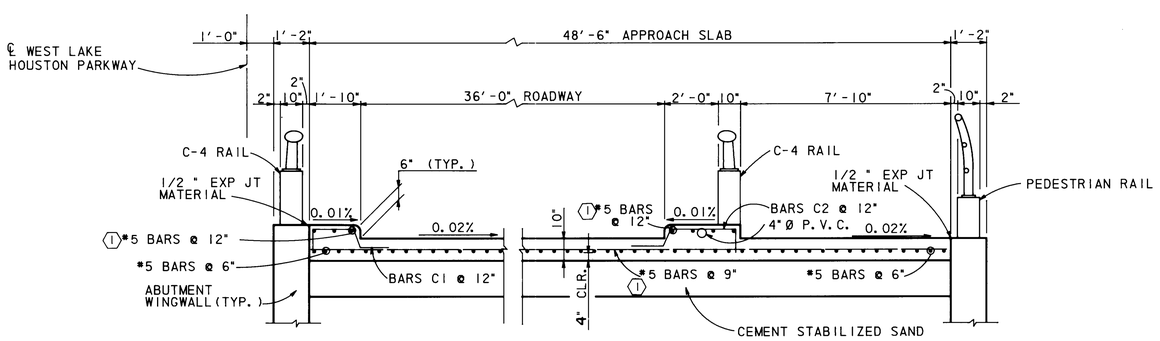

SECTION A-A
SCALE : 3/8"=1'-0"

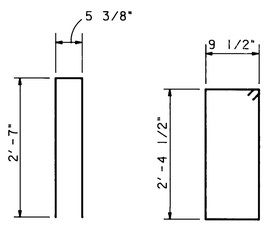

BARS U (#5) ①
N. T. S.

BARS S (#5) ①
N. T. S.

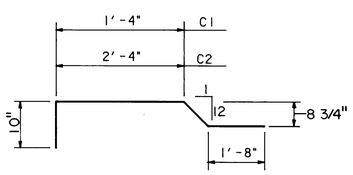

BARS C (#5) ①
N. T. S.

DRAIN GRAVEL	
SIEVE SIZE	% FINER
3/4"	100
3/8"	55-100
NO. 4	15-100
NO. 8	0-50
NO. 16	0-15
NO. 20	0-5"
NO. 200	0-5"

HARDWARE CLOTH	
MAX. WIDTH OF MESH OPENING	1/8"
MIN. WIDTH OF MESH OPENING	1/16"

FILTER FABRIC	
MAX. EQUIVALENT OPENING SIEVE	NO. 70 SIEVE
MIN. EQUIVALENT OPENING SIEVE	NO. 100 SIEVE

P.V.C. PIPE SHALL BE SCHEDULE 40.

NOTE:
DRAIN GRAVEL, P.V.C. PIPE, FILTER FABRIC HARDWARE CLOTH, AND ROOFING FELT SHALL BE CONSIDERED INCIDENTAL TO THE COST OF OTHERS ITEMS OF WORK.

STATE OF TEXAS
J. ROBERTO ARROYAVE
44865
REGISTERED PROFESSIONAL ENGINEER
4/15/90

APPROVED FOR CITY OF HOUSTON 9

DEPARTMENT OF PUBLIC WORKS:

D. Reedom 5-9-90 — Water Design — Paving
Water Quality — Storm Sewer
Assist.- Dir. Water Div. 5-17-90 — Sanitary Sewer
Assistant Director — Director 5-31-90
Date:
OTHER DEPT'S 5/10/90 — Traffic & Transp. — City Planning Dept.

NO.	DATE	REVISION	APPROV.
4			
3			
2			
1	2-28-91	ADDED WEEP HOLE SPACING NOTE, BAR SIZES ADDED.	MAA

WEST LAKE HOUSTON PARKWAY
WEST FORK SAN JACINTO RIVER BRIDGE

APPROACH SLAB & CONCRETE SLOPE PROTECTION DETAILS

1 OF 1

Turner Collie & Braden Inc.
ENGINEERS • PLANNERS

Unit ARROYAVE	Scale: AS SHOWN	Date JANUARY, 1990	
Designed DJL	Checked EDC	Job No. 62-68012-001	Contract
Drawn RGD	Approved	Sheet 33 of 41	

ADDENDUM # 1

319803

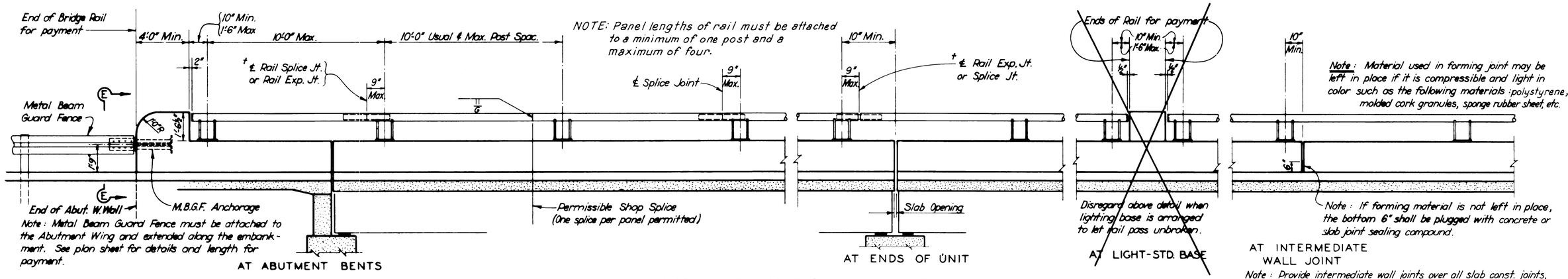

MIN. WALL THICKNESS FOR SLEEVES		
Rail Member →	○	○
Splice Matl. ↓	A53	5LX52
ASTM-A53-B	.353"	.339"
" A36 or A500 Gr.B	.339"	.325"
" A441	.239"	.231"
API-5LX52	.224"	.216"

Note: Other sections of equal or greater strength are acceptable.

GENERAL NOTES:
Designed according to AASHTO 1977 Standard and current Interim Specifications.
All open ends of rail shall be capped.
Rail posts shall be set perpendicular to top of parapet wall.
Anchor bolts, nuts and washers shall be galvanized after fabrication.
Nuts and washers for Anchor Bolts shall conform to A325 requirements. Nuts may be tapped or chased after galvanizing. Bolts and nuts shall have Class 2A and 2B fit tolerances.

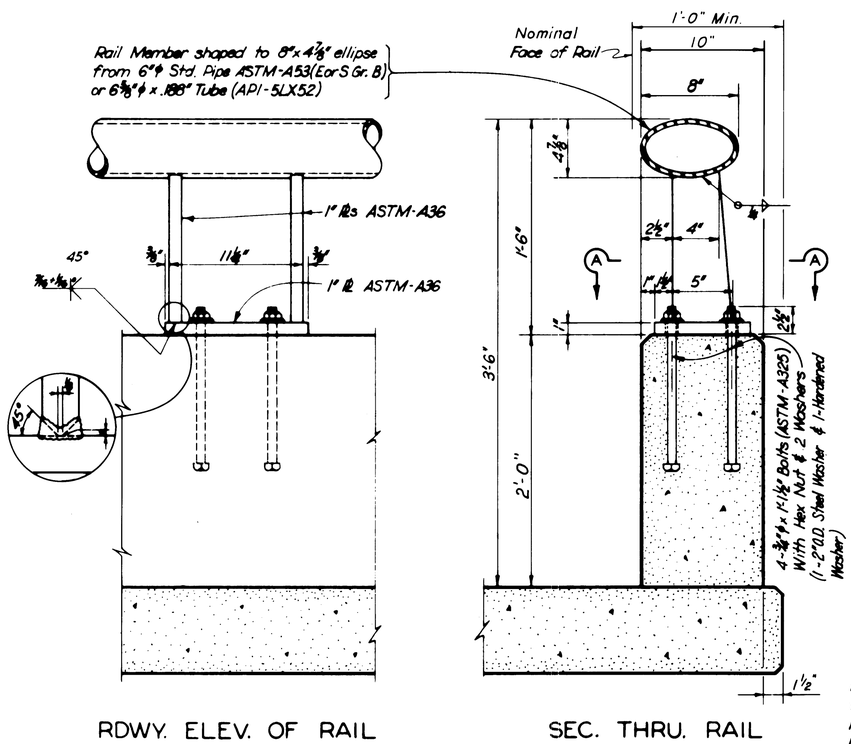

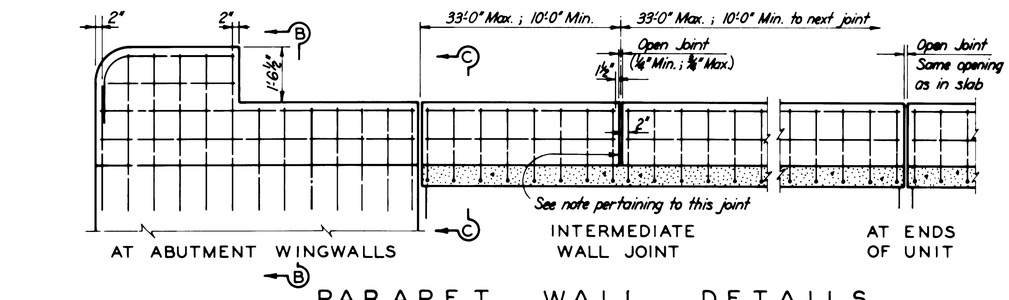

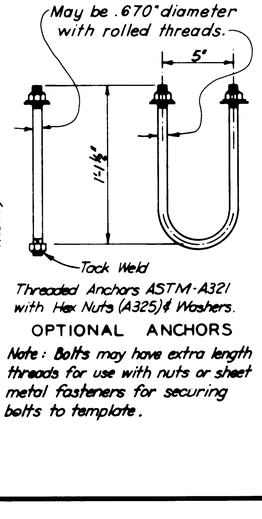

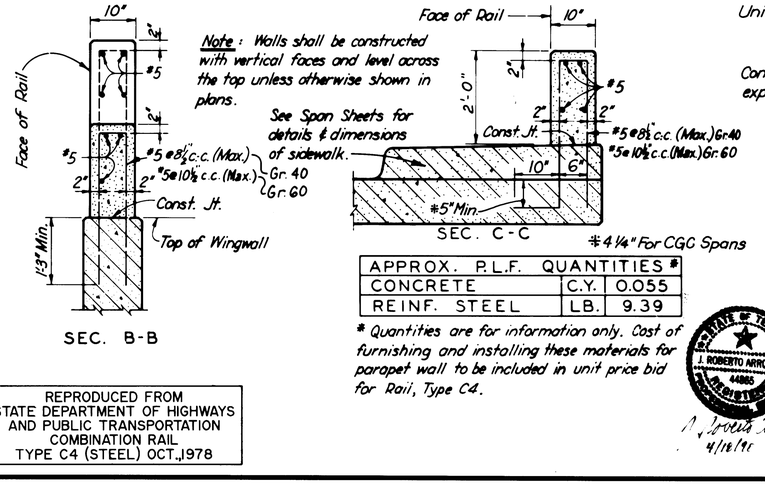

APPROX. P.L.F. QUANTITIES *		
CONCRETE	C.Y.	0.055
REINF. STEEL	LB.	9.39

* Quantities are for information only. Cost of furnishing and installing these materials for parapet wall to be included in unit price bid for Rail, Type C4.

Unit bid price for Rail Type C4 includes:
Concrete Parapet Wall and Wing Terminal Wall, Metal Railing, Posts, Connectors, Anchor Bolts and M.B.G.F. Anchorage.
Concrete for parapet wall shall be Class B1. Chamfer all exposed corners ¾" unless otherwise shown.

REPRODUCED FROM STATE DEPARTMENT OF HIGHWAYS AND PUBLIC TRANSPORTATION COMBINATION RAIL TYPE C4 (STEEL) OCT., 1978

NO.	DATE	REVISION	APPROV.
4			
3			
2			
1			

WEST LAKE HOUSTON PARKWAY
WEST FORK SAN JACINTO RIVER BRIDGE

TYPE C4 RAIL DETAILS

Turner Collie & Braden Inc.
ENGINEERS • PLANNERS

STATE OF TEXAS
J. ROBERTO ARROYAVE
44985
LICENSED ENGINEER
4/16/91

Unit ARROYAVE	Scales N.T.S.	Date JANUARY, 1990	
Designed THD	Checked EDC	Job No. 62-68012-001	Contract
Drawn THD	Approved	Sheet 34	of 41

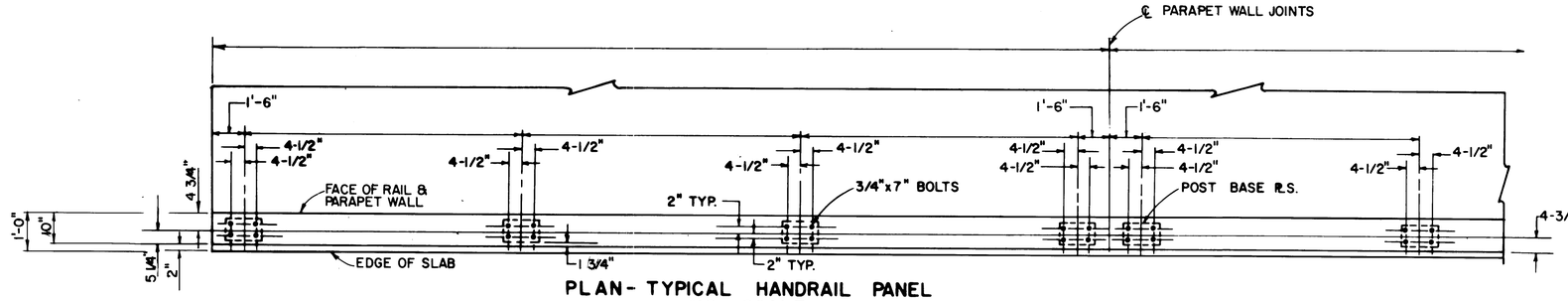

PLAN - TYPICAL HANDRAIL PANEL
NO SCALE

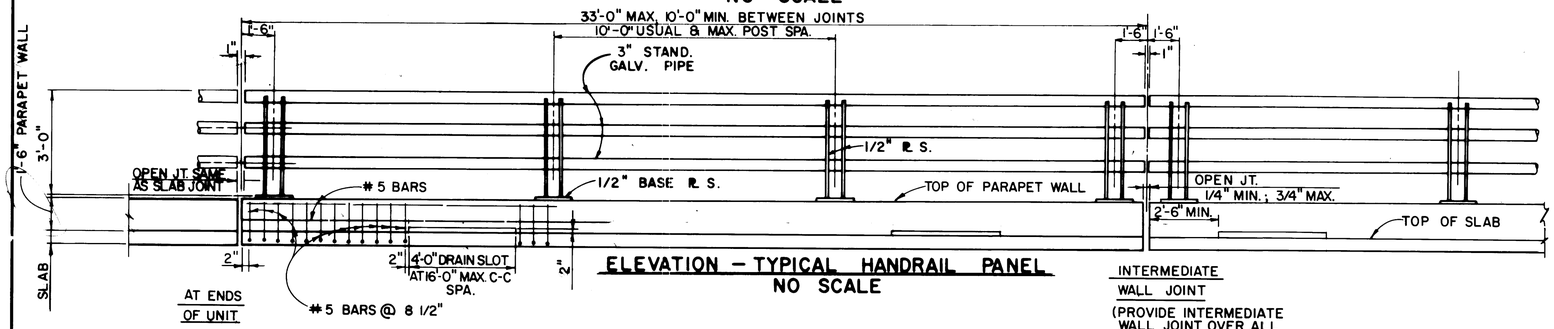

ELEVATION - TYPICAL HANDRAIL PANEL
NO SCALE

INTERMEDIATE WALL JOINT

(PROVIDE INTERMEDIATE WALL JOINT OVER ALL INTERIOR SUPPORTS)

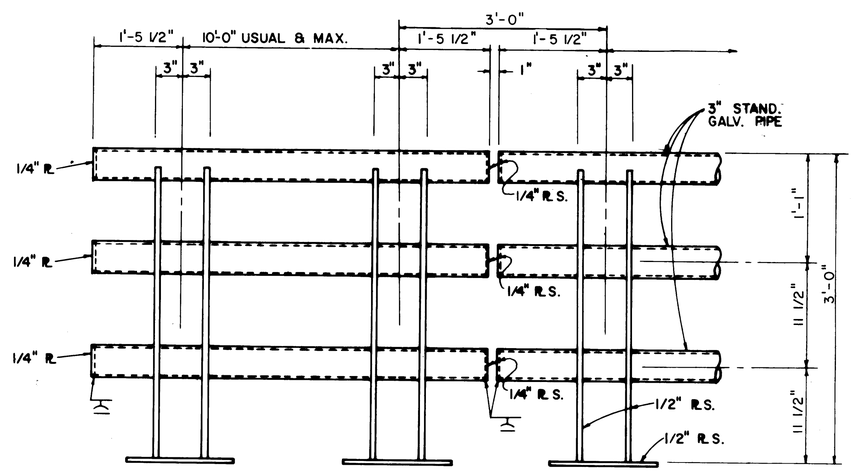

ELEVATION - RAILING END DETAILS
NO SCALE

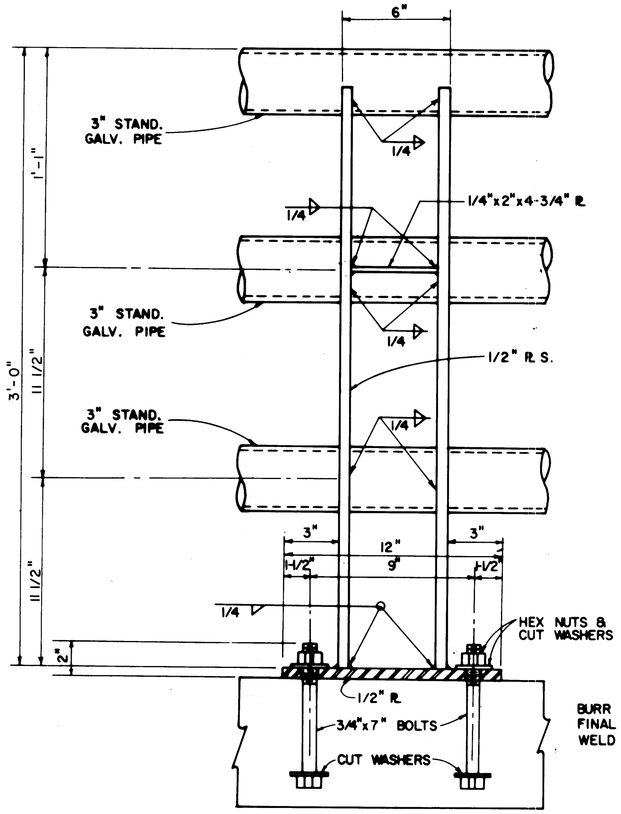

ELEVATION AT POST
3" = 1'-0"

BURR THREADS AFTER FINAL ADJUSTMENT TACK WELD NUTS & WASHERS

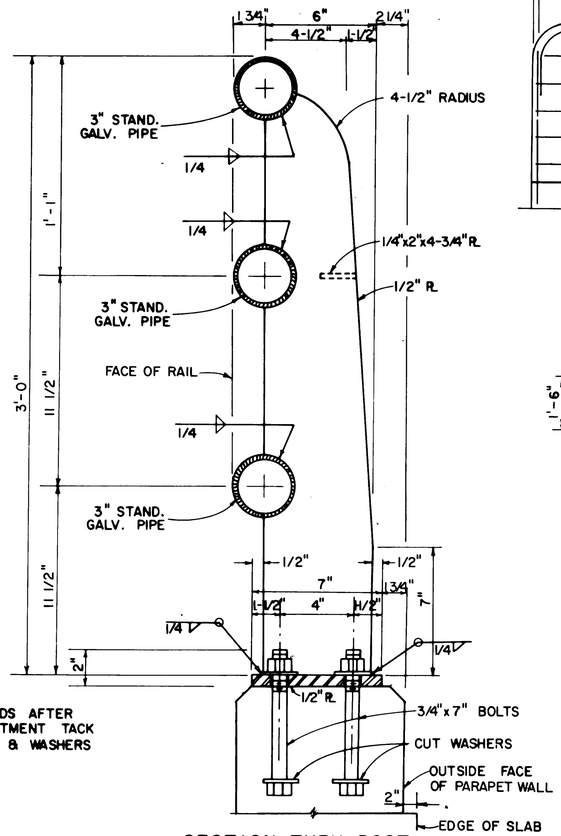

SECTION THRU POST
3" = 1'-0"

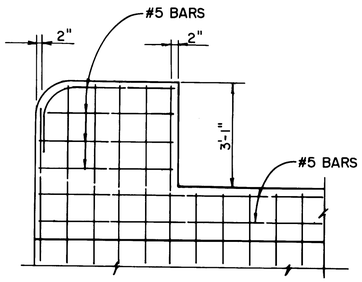

END RAIL DETAIL

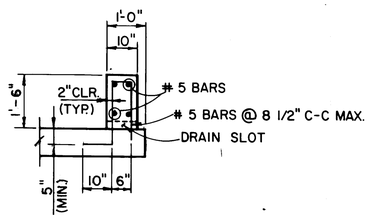

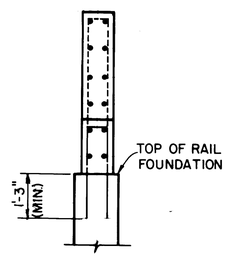

PARAPET WALL DETAILS

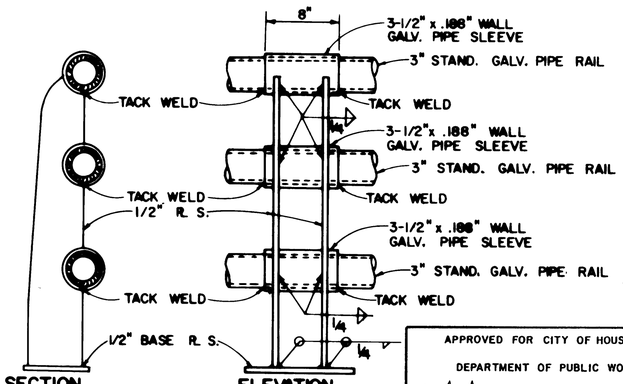

ALTERNATE POST DETAILS
1-1/2" = 1'-0"

APPROVED FOR CITY OF HOUSTON 9

DEPARTMENT OF PUBLIC WORKS:

Water Design	D. Hardison 5-9-90	Paving	Stu Williams 5-7-90
Water Quality		Storm Sewer	
Assistant Director - Water Div.	Bill Hardison 5-17-90	Sanitary Sewer	
Assistant Director		Director	5-31-90

Date:

OTHER DEPT'S

Traffic & Transp. 5/10/90 — City Planning Dept. 5-7-90

NOTES:

1. ALL PIPE, PLATES, SHIMS, BOLTS, NUTS AND WASHERS SHALL BE GALVANIZED.
2. CONCRETE FOR PARAPET WALL SHALL BE CLASS BI. CHAMFER ALL EXPOSED CORNERS 3/4" UNLESS OTHERWISE SHOWN.
3. REINFORCING STEEL FOR PARAPET WALL SHALL BE ASTM A615, GRADE 60.

STATE OF TEXAS — J. ROBERTO ARROYAVE — 44865 — REGISTERED PROFESSIONAL ENGINEER

4-18-90

NO.	DATE	REVISION	APPROV.
2			
1			

WEST LAKE HOUSTON PARKWAY
WEST FORK SAN JACINTO RIVER BRIDGE

BRIDGE RAILING DETAILS

Turner Collie & Braden Inc.
CONSULTING ENGINEERS
TEXAS AUSTIN DALLAS EL PASO HOUSTON PORT ARTHUR
COLORADO DENVER GRAND JUNCTION

Unit	ARROYAVE	Scale: Horz. NONE Vert.		Date	DECEMBER, 1989
Designed	EDC	Checked	JRA	Job no. 62-68012-001	Contract
Drawn	RGD	Approved		Sheet	35 of 41

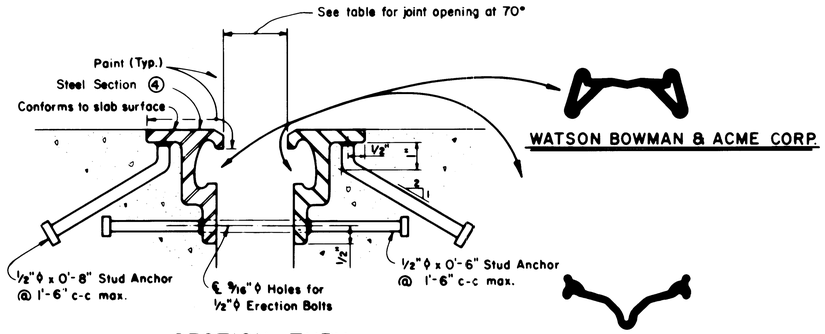

SECTION THRU
WATSON BOWMAN & ACME CORP.
STRUCTURAL ACCESSORIES INC.
D S BROWN COMPANY
BRG INDUSTRIES INC.

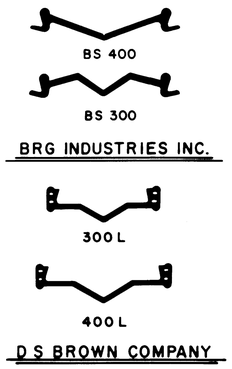

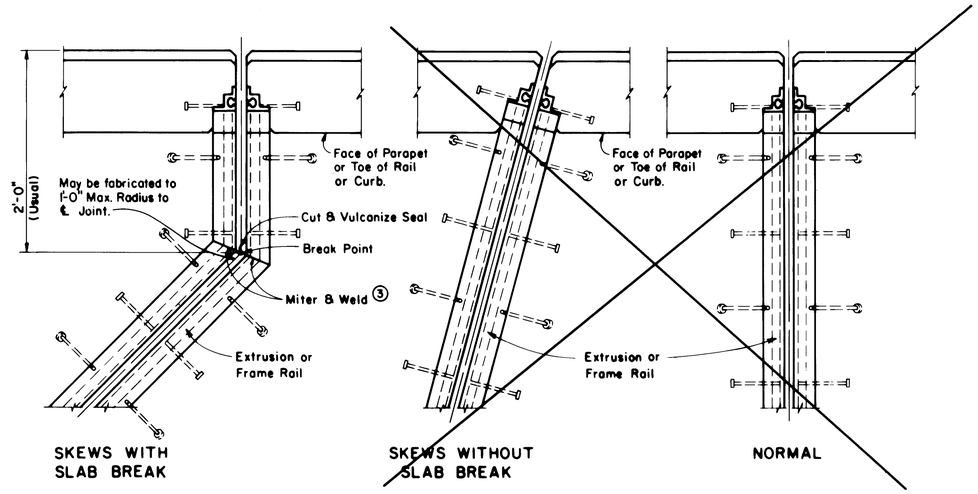

PLANS—END CONDITIONS

MANUFACTURER	STEEL SECTION ④	NEOPRENE STRIP SEAL 3" JOINT Seal Type	3" JOINT Joint Opening	4" JOINT Seal Type	4" JOINT Joint Opening
Watson Bowman & Acme Corp.	Type M Extrusion	S 300	1.75	S 400	1.75
Structural Accessories Inc.	Type SCII Extrusion	40 SS	1.75	50 SS	1.75
D S Brown	Frame Rail SSCM	300 L	1.75	400 L	1.75
BRG Industries Inc.	Type W*	BS 300	1.75	BS 400	1.75

④ Shape of extrusion shown is typical Variations depending on manufacturer are permissible.

* Type W to be 2.75 inch by 3.25 inch and 3/8 inch minimum thickness.

REPRODUCED FROM
STATE DEPARTMENT OF HIGHWAYS
AND PUBLIC TRANSPORTATION
SEALED EXPANSION JOINT DETAILS
WITHOUT OVERLAY
SEJ-S(I) REV. 10-86

GENERAL NOTES:

Sealed Exp. Jts. shall be provided in the size and at all locations shown on plans.

Shop fabrication will be required at all intersections of cross slope and at break points.

Steel sections shall be shipped in convenient lengths not to exceed 24'-0" and butt welded in the field.

At splices, a continuous ground smooth weld shall be provided except on all surfaces in locking contact with seal which shall have no burrs.

Corresponding sections of Sealed Exp. Jts. shall be temporarily shop assembled, checked for fit, and match marked for shipment.

Erection holes, if required, shall be punched so as to line up when Sealed Exp. Jts. are in their final position. Erection bolts, if used, shall be cut off flush with extrusion promptly after the concrete in the latter of the two placements has taken initial set.

Stud anchors shall be electric arc end-welded with complete fusion.

The neoprene seal shall be continuous and included in the price bid for Sealed Exp. Jt.

The Contractor shall arrange for securing the Sealed Exp. Jt. in position, and placing to the proper grade and alignment by welding braces to adjacent slab steel, to prestressed beam stirrups, or to anchors cast in concrete diaframs. Cost of temporary bracing is to be included in the price bid for Sealed Exp. Jt.

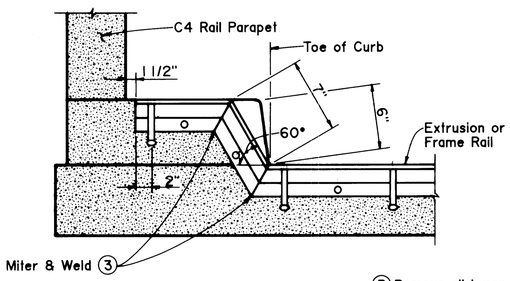

③ Remove all burrs which will be in contact with seal prior to making splice.

(HIGH SIDE)

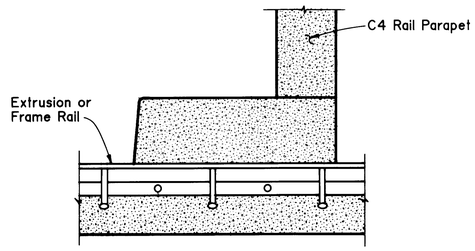

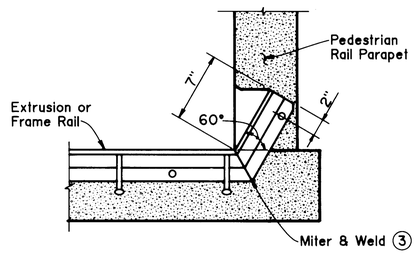

(LOW SIDE)

SECTIONS THRU SLAB

STATE OF TEXAS
J. ROBERTO ARROYAVE
44885
REGISTERED
J. Roberto Arroyave
4/18/90

NO.	DATE	REVISION	APPROV.
4			
3			
2			
1			

WEST LAKE HOUSTON PARKWAY
WEST FORK SAN JACINTO RIVER BRIDGE

SEALED EXPANSION JOINT DETAILS

Turner Collie & Braden Inc.
ENGINEERS • PLANNERS

Unit ARROYAVE	Scale: N.T.S.	Date JANUARY, 1990
Designed EDC	Checked JRA	Job No. 62-68012-001 Contract
Drawn RGD	Approved	Sheet 36 of 41

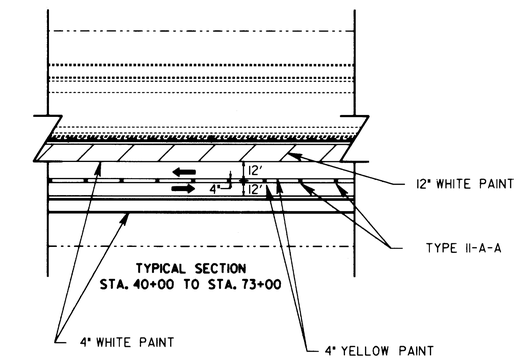

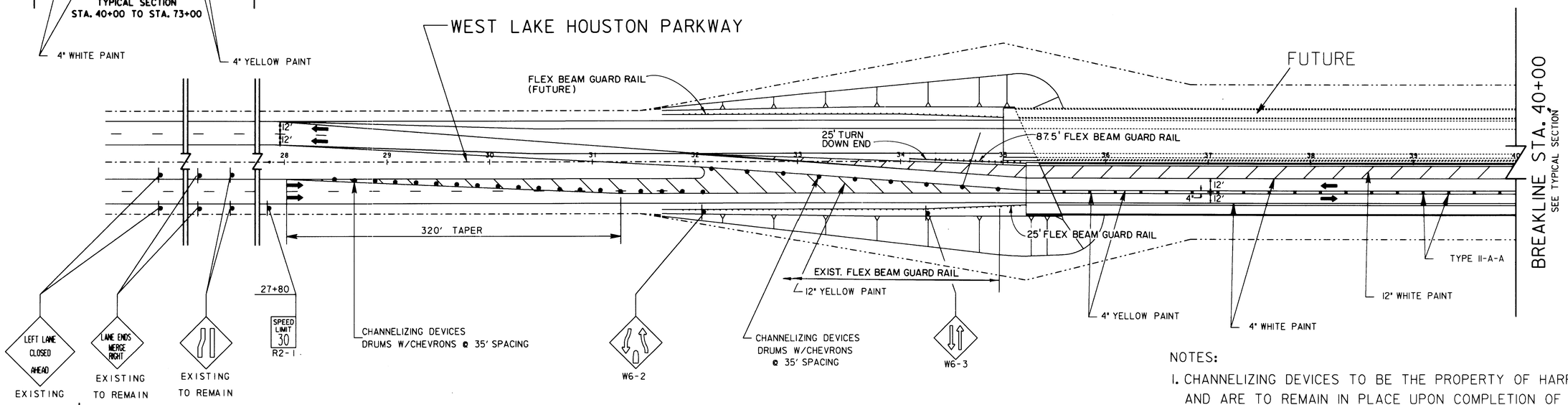

NOTES:

1. CHANNELIZING DEVICES TO BE THE PROPERTY OF HARRIS COUNTY AND ARE TO REMAIN IN PLACE UPON COMPLETION OF THE PROJECT.
2. THE EXISTING PAVEMENT STRIPES SHALL BE REMOVED BY SAND BLASTING OR OTHER METHOD APPROVED BY HARRIS COUNTY.

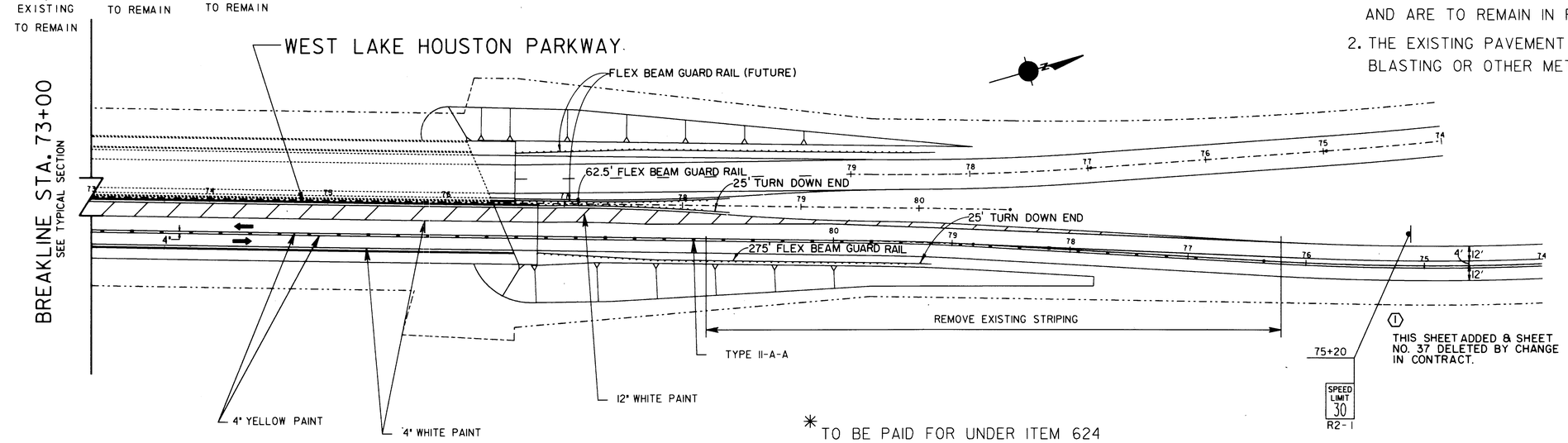

THIS SHEET ADDED & SHEET NO. 37 DELETED BY CHANGE IN CONTRACT.

* TO BE PAID FOR UNDER ITEM 624

REFLECTIVE PAINT				PAVEMENT MARKER TYPE II-A-A	*SIGNS	REMOVE PAINT STRIPE		DRUMS AND CHEVRONS
WHITE		YELLOW				4 IN	12 IN	
4 IN SF	12 IN SF	4 IN SF	12 IN SF	EA	EA	SF	SF	EA
3267	2720	3267	310	168	4	667	200	29

NO.	DATE	REVISION	APPROV.
4			
3			
2			
1	8-11-92	SHEET ADDED	CBM

WEST LAKE HOUSTON PARKWAY
WEST FORK SAN JACINTO RIVER BRIDGE

PAVEMENT MARKING & FLEX BEAM GUARD RAIL LAYOUT

STATE OF TEXAS
CRAIG L. HESTER
65414
REGISTERED
PROFESSIONAL ENGINEER

THE SEAL APPEARING ON THIS DOCUMENT WAS AUTHORIZED BY CRAIG L. HESTER, P.E. 65414 ON 5-14-1992.

Turner Collie & Braden Inc.
ENGINEERS • PLANNERS

Unit	SUTTON	Scales	1" = 50'	Date	FEBRUARY ,1992
Designed	CLH	Checked	RES	Job No. 6268012022	Contract
Drawn	JOEF	Approved		Sheet 37A	of 41

C:\WLHP\WLHPSNPM.DGN

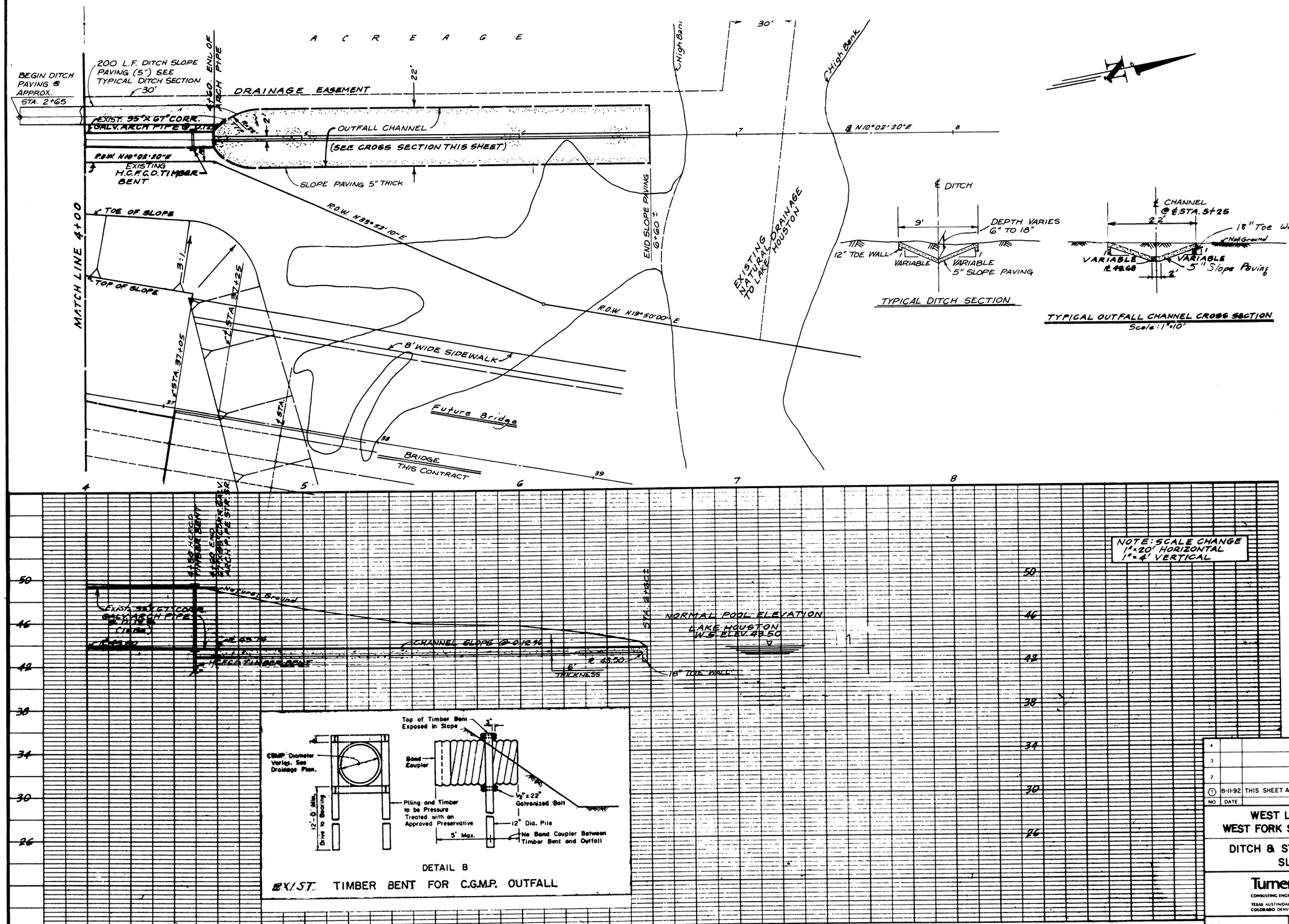

NO	DATE	REVISION	APPROV
4			
3			
2			
1	8-11-92	THIS SHEET ADDED BY CHANGE IN CONTRACT	CBM

WEST LAKE HOUSTON PARKWAY
WEST FORK SAN JACINTO RIVER BRIDGE

DITCH & STORM SEWER OUTFALL SLOPE PAVING

Turner Collie & Braden Inc.
CONSULTING ENGINEERS
TEXAS AUSTIN/DALLAS/EL PASO/HOUSTON/PORT ARTHUR
COLORADO DENVER/GRAND JUNCTION

Unit	Scale Horz. Vert. AS NOTED	Date AUGUST, 1992
Designed	Checked	Job No. Contract
Drawn	Approved	Sheet 378 of 41

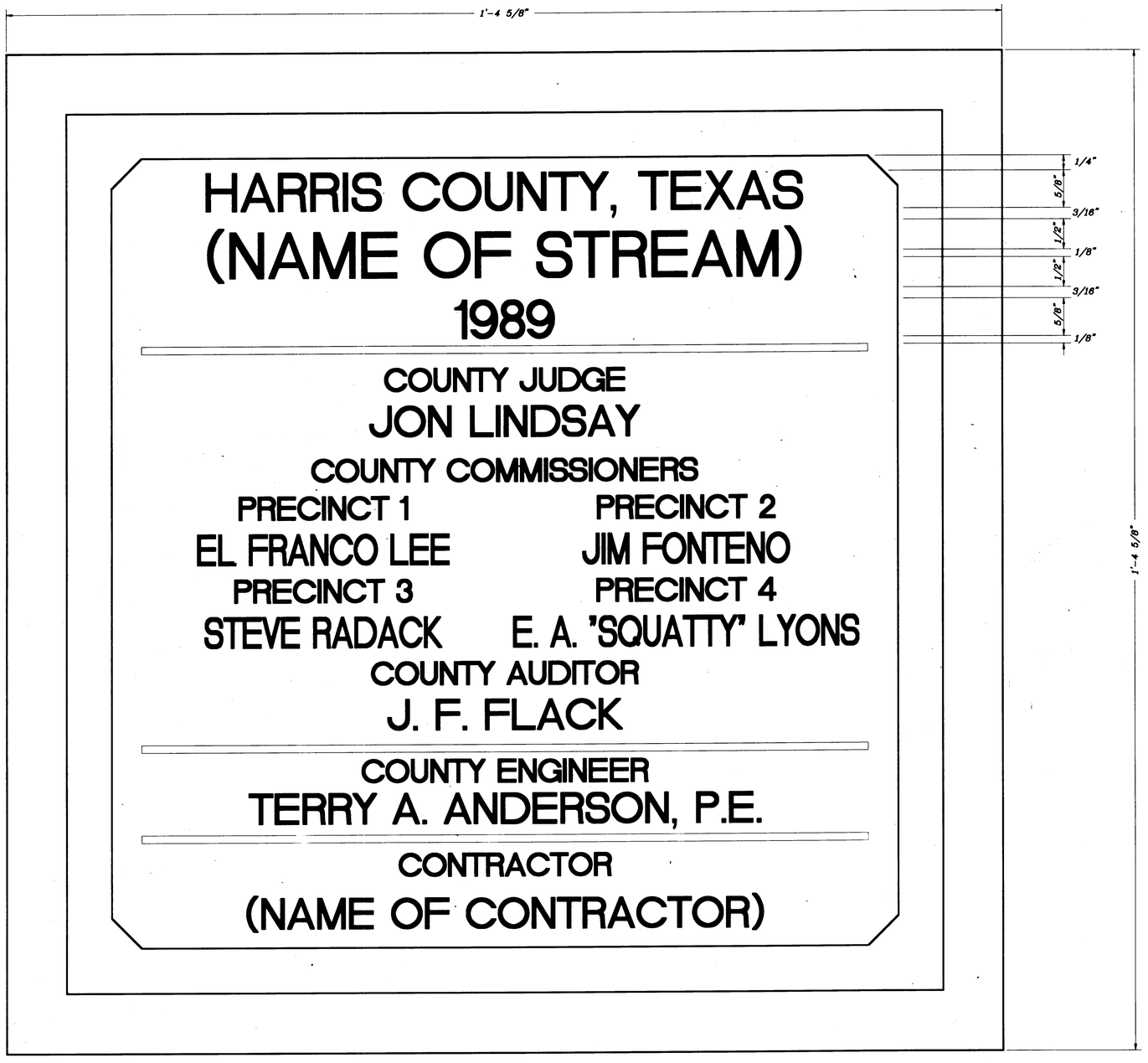

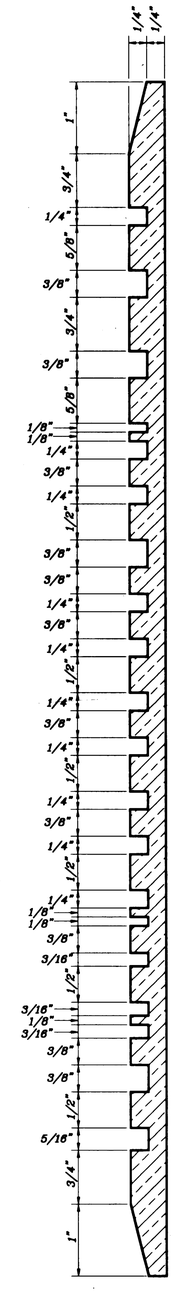

NOTES

1. The contractor shall submit a rubbing of the proposed plaque to the County Engineer for approval prior to final construction. Harris County reserves the right to make name changes at that time.
2. The plaque shall be constructed of cast aluminum.
3. Use this spacing and letter height when two lines are required for name of stream.

NO.	REVISIONS	DATE	NAME

HARRIS COUNTY
ENGINEERING DEPARTMENT

HARRIS COUNTY 1836 TEXAS

PROJECT TITLE: WEST LAKE HOUSTON PARKWAY
WEST FORK SAN JACINTO RIVER BRIDGE

DRAWN BY: J.C.H.
DES'N BY:
CK'D BY:
SCALE: FULL
DATE: 11/2/89

DESCRIPTION: BRIDGE PLAQUE
BRIDGE NO. 4118-51

JOB NO.
FILE NAME: PLAQUE
FILE NO.
APPROVED BY:
SHT NO. 38 OF 41

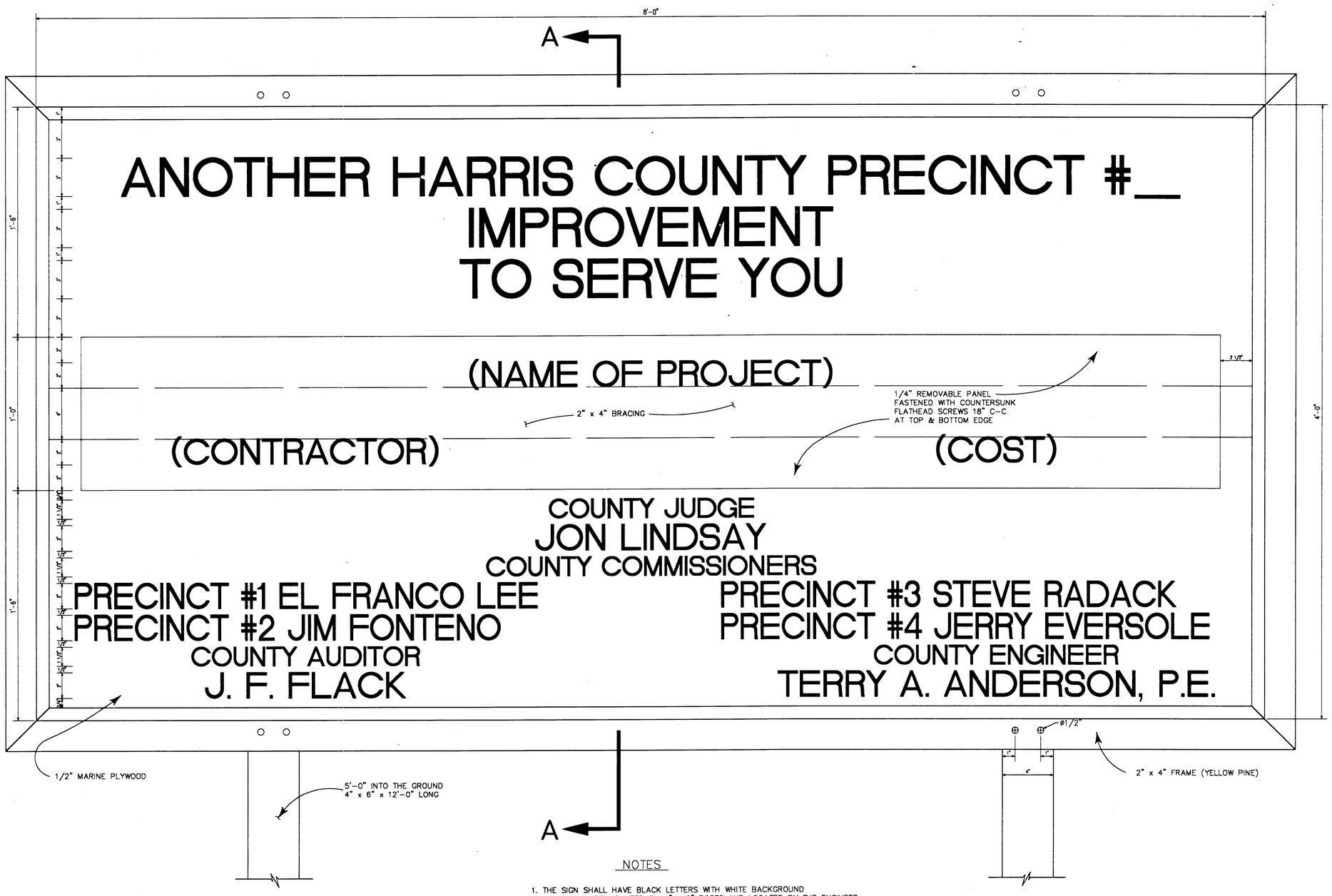

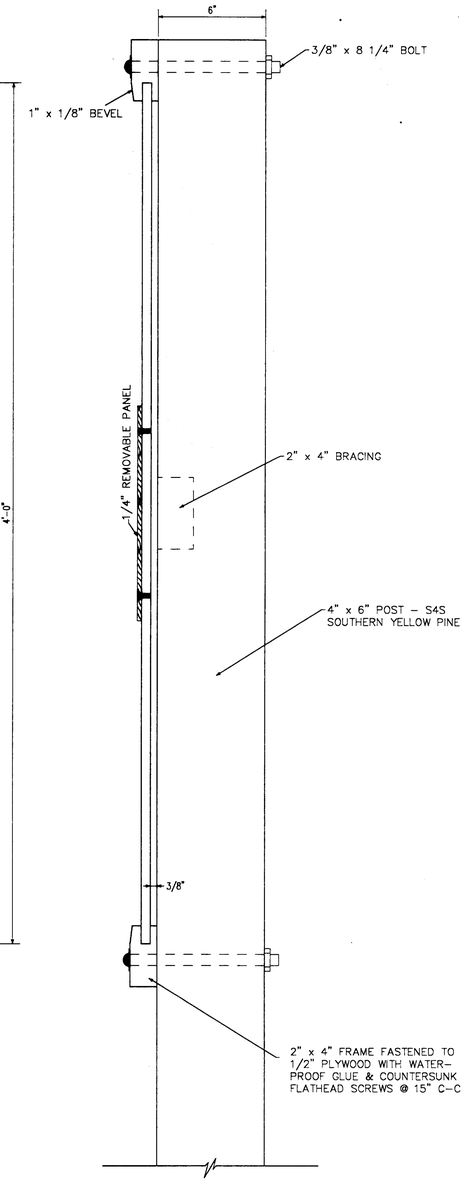

SECTION A-A

NOTES

1. THE SIGN SHALL HAVE BLACK LETTERS WITH WHITE BACKGROUND
2. SIGN SHALL BE MOUNTED ON 4" x 6" POSTS AND LOCATED BY THE ENGINEER
3. REMOVABLE PANEL SHALL BE 1/2" MARINE PLYWOOD
4. ALL BOLTS SH4. ALL BE GALVANIZED OR CADMIUM PLATED
5. 4" x 6" POSTS SHALL BE WOLMANIZED OR PENTACHLOROPHENOL TREATED
6. ALL WOOD SURFACES SH6. ALL HAVE PRIME COAT AND TWO COATS OF SHERWIN-WILLAMS KEM-LUSTRAL ENAMEL OR EQUAL.

NO.	REVISIONS	DATE	NAME

HARRIS COUNTY
ENGINEERING DEPARTMENT

HARRIS COUNTY 1836 TEXAS

PROJECT TITLE:	WEST LAKE HOUSTON PARKWAY WEST FORK SAN JACINTO RIVER BRIDGE
DRAWN BY: FAD	SHEET DESCRIPTION: PROJECT SIGN
CK'D BY:	WEST LAKE HOUSTON PARKWAY BRIDGE
SCALE: 3"=1'-0"	BRIDGE NO. 4118-51
DATE: 1/11/91	APPROVED BY:
JOB NO.	
FILE NAME: PROJSIGN	
FILE NO.	
SHT. NO.	39 OF 41

APPROVED FOR CITY OF HOUSTON 9

DEPARTMENT OF PUBLIC WORKS:

S. Hendore 5-9-90 Water Design	Paving
Water Quality	Sh. Helmy 5.7.90 Storm Sewer
Assistant Director - Water Div. Bill Deschner 5-17-90	Sanitary Sewer
Assistant Director	Director
Date	

OTHER DEPT'S

Traffic & Transp. 5/10/90	City Planning Dept.

CLEARING PLAN

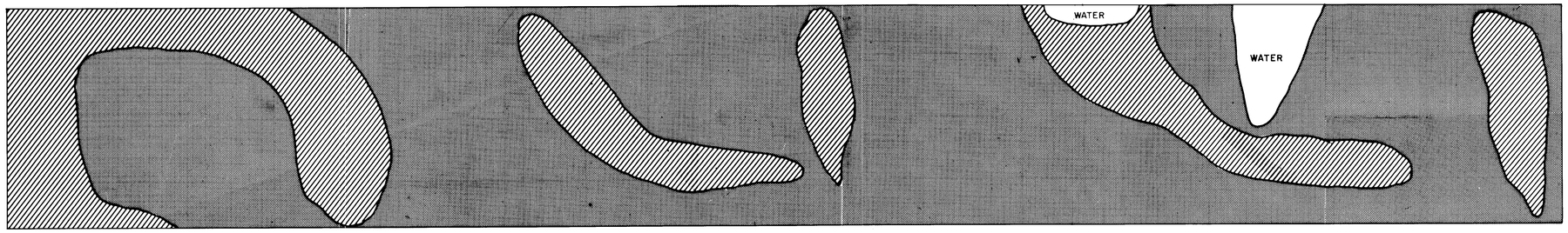

NOTES:

CLEARING

1. CONTRACTOR SHOULD NOTIFY THE COUNTY ENGINEER OF THE TIME OF COMMENCING WORK 48 HOURS PRIOR TO COMMENCING INITIAL WORK AND 24 HOURS PRIOR TO STARTING ANY SUBSEQUENT DAILY WORK IN ORDER THAT A HARRIS COUNTY INSPECTOR BE ALLOCATED FOR ONSITE INSPECTION OF WORK AS IT PROCEEDS.
2. THE CONTRACTOR SHOULD ALSO NOTIFY JOHN KOROS AT MERCER ARBORETUM (443-8731) AT LEAST 5 DAYS (120 HOURS) PRIOR TO COMMENCING ANY CLEARING OPERATIONS IN THE AREA TO BE CLEARED. TREES TO BE SAVED WILL BE FLAGGED IN GREEN.

NOTES: PLANTING

1. LOCATIONS OF AREAS SHOWN TO BE EXCAVATED ARE APPROXIMATE. FINAL SIZE AND LOCATIONS WILL BE DETERMINED BY COUNTY ENGINEER.
2. LOCATIONS OF TREES TO BE PLANTED ARE APPROXIMATE, FINAL LOCATIONS WILL BE DETERMINED BY COUNTY ENGINEER.
3. PLANTING MUST TAKE PLACE BETWEEN NOVEMBER AND FEBRUARY.
4. THE COUNTY ENGINEER RESERVES THE RIGHT TO INSPECT THE PLANT MATERIAL BEFORE CONTRACTOR BUYS IT. CONTACT JOHN KOROS (443-8731) AT MERCER ARBORETUM 48 HOURS PRIOR TO EXPECTED PURCHASE.

GRADING AND PLANTING

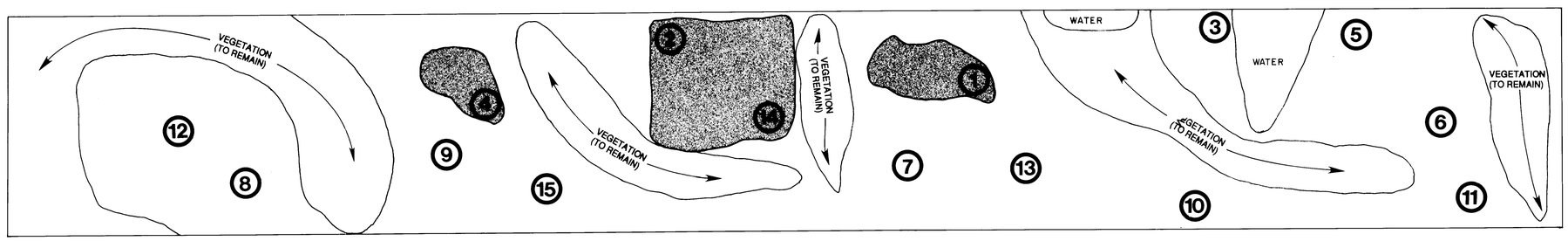

STATE OF TEXAS
P. A. CARTER
55265
REGISTERED PROFESSIONAL ENGINEER
Patricia A. Carter 4-18-90

VICINITY MAP

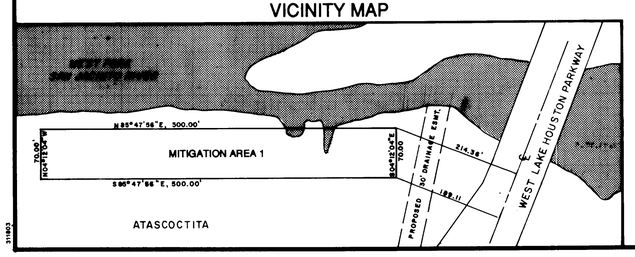

SPECIES TABLE

LOCATION NUMBERS	SPECIES
1 to 4	OVERCUP OAKS
5 to 8	WILLOW OAKS
9 to 11	WATER OAKS
12 to 13	PECAN TREES
14	BLACK WILLOW OR DRUMMOND RED MAPLE
15	WINGED ELM OR GREEN ASH OR LOBLOLLY PINE

LEGEND

- TREES TO BE PRESERVED, HAND CLEARING OF VEGETATION
- AREA TO BE CLEARED, SELECTED LARGE TREES TO BE PRESERVED
- EXCAVATION (12")
- GROUP OF THREE TREES TO BE PLANTED, MINIMUM CALIPER TO BE 1" (SEE SPECIES TABLE)

NO.	DATE	REVISION	APPROV.
4			
3			
2			
1			

WEST LAKE HOUSTON PARKWAY
MITIGATION AREA 1

CLEARING, GRADING AND PLANTING

Turner Collie & Braden Inc.
ENGINEERS • PLANNERS

Unit ESENWEIN	Scale: 1" = 20'	Date FEBRUARY 1990
Designed L.J.O.	Checked P.A.C.	Job No. 68-1200-003
Drawn M.J.	Approved	Sheet 40 of 41

* STATIONING, STORM SEWER, INLETS AND MANHOLE LOCATIONS PER JOB No. 4262-010 CONTRACT No. 2 PLANS

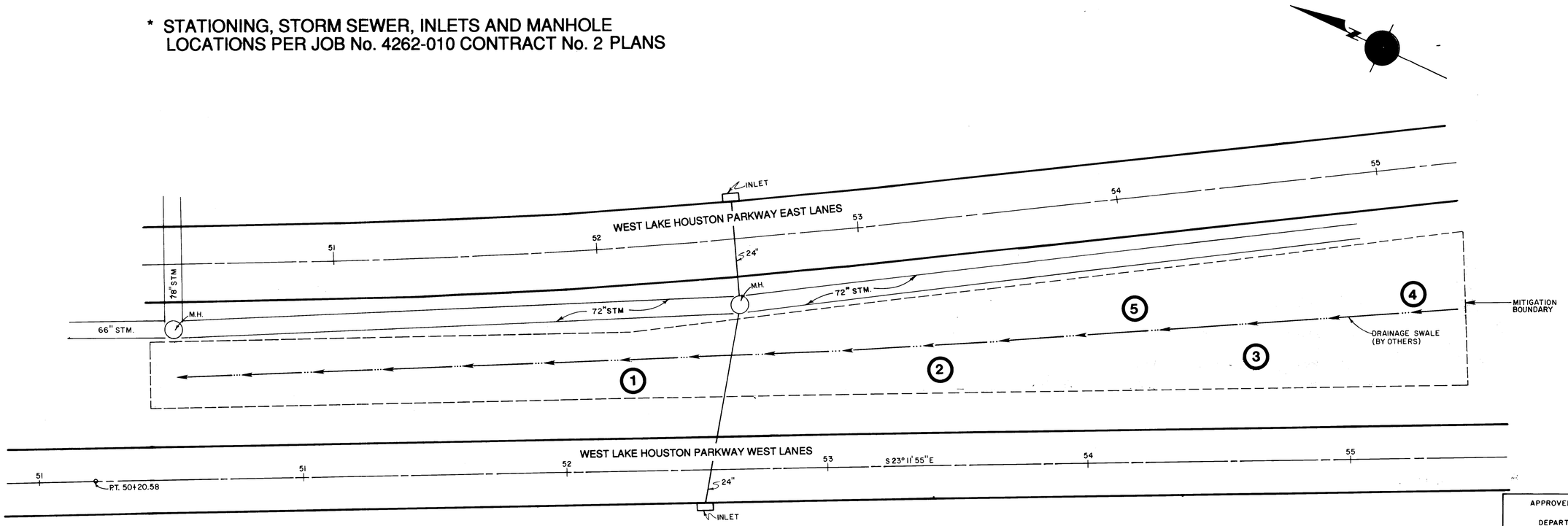

VICINITY MAP

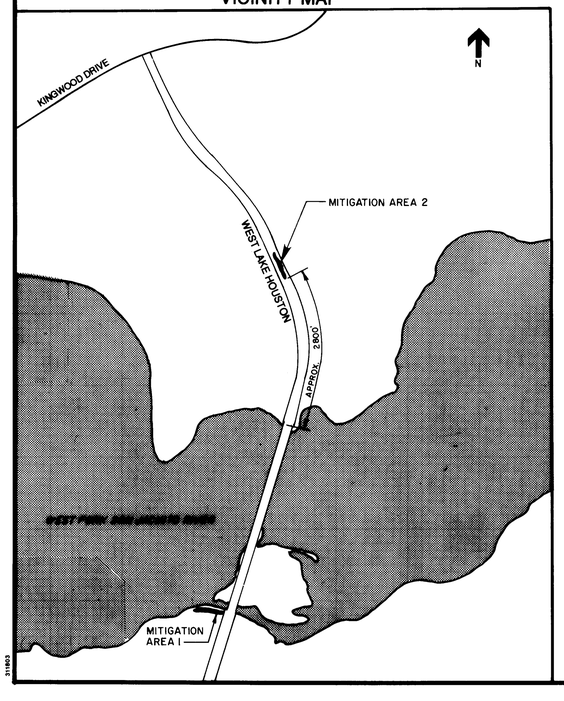

SPECIES TABLE

LOCATION NUMBERS	SPECIES
(1) to (3)	WATER OAK AND/OR WILLOW OAK
(4)	PECAN
(5)	DRUMMOND RED MAPLE, GREEN ASH OR LOBLOLLY PINE

LEGEND

○ GROUP OF THREE TREES TO BE PLANTED, MINIMUM CALIPER TO BE 1" (SEE SPECIES TABLE)

NOTES:

1. LOCATIONS OF TREES TO BE PLANTED ARE APPROXIMATE, FINAL LOCATIONS WILL BE DETERMINED BY COUNTY ENGINEER.
2. PLANTING MUST TAKE PLACE BETWEEN NOVEMBER AND FEBRUARY.
3. THE COUNTY ENGINEER RESERVES THE RIGHT TO INSPECT PLANT MATERIAL BEFORE CONTRACTOR BUYS IT. CONTACT JOHN KOROS (443-8731) AT MERCER ARBORETUM 48 HOURS PRIOR TO EXPECTED PURCHASE.
4. LOCATION AND LENGTH OF DRAINAGE SWALE SHOWN IS PRELIMINARY. AT THE TIME TREES WILL BE PLANTED, LAKE HOUSTON PARKWAY CONSTRUCTION SHOULD BE SUBSTANTIALLY COMPLETED.

APPROVED FOR CITY OF HOUSTON 9

DEPARTMENT OF PUBLIC WORKS:

Water Design — D. Kudera 5-9-90

Water Quality — for Jim Helwig 5.7.90

Assistant Director - Water Div — Bill Deschner 5-17-90

Sanitary Sewer — William Dow Boyce 5/7/90

Assistant Director — Date

Director — 5-31-90

OTHER DEPT'S — Traffic & Transp. 5/10/90 — City Planning Dir.

P. A. CARTER 58265 REGISTERED PROFESSIONAL ENGINEER — STATE OF TEXAS

Patricia A. Carter 4-18-90

NO.	DATE	REVISION	APPROV.
4			
3			
2			
1			

WEST LAKE HOUSTON PARKWAY
MITIGATION AREA 2

PLANTING

Turner Collie & Braden Inc.
ENGINEERS • PLANNERS

Unit ESENWEIN	Scale: 1" = 20'	Date FEBRUARY 1990
Designed L.J.O.	Checked P.A.C.	Job No. 68-12001-003
Drawn M.J.	Approved	Sheet 41 of 41

311803