Document 00910

ADDENDUM NO. 1

Date of Addendum: 9/17/15

PROJECT NAME: Keegans Bayou WWTP Improvements

PROJECT NO: WBS No. R-000265-0101-4

BID DATE: September 24, 2015 (There is no change to the Bid Date.)

FROM: J. Timothy Lincoln, P.E., City Engineer
City of Houston
Department of Public Works and Engineering
611 Walker, 15th Floor
Houston, Texas 77002
Attn: Bill Zod, P.E., Project Manager

STATE OF TEXAS
Robert Thomas McCarty
50064
LICENSED
PROFESSIONAL ENGINEER
9-17-15

TO: Prospective Bidders

This Addendum forms a part of the Bidding Documents and will be incorporated into the Contract documents, as applicable. Insofar as the original Project Manual and Drawings are inconsistent, this Addendum governs.

This Addendum uses the change page method: remove and replace or add pages, or Drawing sheets, as directed in the change instructions below. Change bars (|) are provided in the outside margins of pages from the Project Manual to indicate where changes have been made; no change bars are provided in added Sections. Reissued Drawing Sheets show the Addendum number below the title block and changes in the Drawing are noted by a revision mark and enclosed in a revision cloud.

CHANGES TO PROJECT MANUAL

BIDDING REQUIREMENTS

1. Document 00410B – Bid Form, Part B. Replace document in its entirety, pages 00410B-1 through 00410B-7.

SPECIFICATIONS

2. Section 01110 – Summary of Work. Section 1.02, Page 11, Digester Basins, Item

3.b, should read, “Replace ten 10-inch butterfly valve (air).”

3. Section 11176 – Non-Potable Water System. Replace entire specification Section 2.04 as attached.

4. Section 11285 – Specialty Gates. Section 1.04.C – Add Waterman Industries and Hydrogate as Engineer’s approved equal.

5. Section 11285 – Specialty Gates. Section 2.02.C – Wall thimbles are not required, gates shall be face mounted. Delete Section 2.02.C in its entirety.

6. Section 11332 – Mechanical Multiple Rake Scum Bar Screen. Section 1.05.C. – Add WesTech and Headworks as an Engineer’s approved equal.

7. Section 11350 – Fixed Header Coarse Bubble Diffused Aeration System. Section 1.04.A, Add “Each basin shall have 276 diffusers, 138 per header, paired.”

8. Section 13120 – Pre-Cast Concrete Building. Section 2.02.C – An overhead door is not required. Section 2.02.C should be deleted in its entirety.

9. Section 15121 – Telescoping Valves – Section 2.03 - Add Waterman Industries as an Engineer’s approved equal.

CHANGES TO DRAWINGS

10. Replace Sheet 22: Revised Aeration Basins Piping & Equipment Schedule.

11. Replace Sheet 22A: Revised gate schedule.

12. Replace Sheet 47: Modified note for additional information on spray nozzles.

13. Replace Sheet 84: Troy drain valve shall be 4” instead of the 8” called out on the drawing.

14. Add Sheet 185

CLARIFICATIONS

15. Note: Due to subsidence in the area, all elevations shown on as-built drawing attached should be adjusted by -3.5 feet.

16. The Unit Price for Extra Unit Bid Items 9-22 (Clarifier Parts) have been modified to show the equipment cost + 50%.

17. Question: 16481 is missing from the specifications. Is it the intention to sole source the medium voltage duty VFD? Answer: This project does not include any medium duty VFDs.

18. Question: Note 4: Contractor to install temporary cofferdam or stop logs as required to isolate the chambers (East and West of the lift station. The existing sluice gates in the wet well shall not be used.
Please provide sufficient detail of the wet well to construct the bypass.
Where are the existing sluice gates, none are shown?
Answer: See the attached plan and section for the lift station from as-built drawings.

19. Question: The specifications shown in the Table of Contents for Division 10 & 11 do not correspond to the specifications in the Contract Documents. Could you please include the required specifications for this project and delete those that do not pertain to this project? Answer: There are not any specifications in Division 10 and the specifications in Division 11 match the TOC.

20. Question: The extra work items include minimum prices for items with descriptions such as "H119756-225-202 Influent Well HDG" with no explanation of work required. What are these items? Please provide complete drawings and specifications describing this work. Answer: See Specification 11218, Section 1.01, Items B.2 through B.4.

21. Question: Is there an official door specification that is to be used for the doors on drawing 63 tag? Answer: See Specification 08110.

22. Question: Is there any more details regarding the 8'x8' Fiberglass Enclosure identified on drawing 63 in the NE corner of the proposed hypochlorite storage/feed plan? What does this look like? What is it? Specification section 06601 give details for stairs, ladders, grating, and handrail. Answer: Note on Sheet 63 indicates Warmeister Associated Fiberglass or approved equal. Also see Sheet 82 for Structural details of stairs and handrails.

23. Question: The referenced spec section does not contain any diffuser count nor performance requirements. How can testing be performed to confirm compliance with spec when none indicated? Answer: See revised Specification 11350.

24. Question: Page 10 of specification 11176 gives the expected performance for each of the two strainers. Sheet 65 of the drawings shows the strainers sandwiched between 8" spool pieces. The 6" Hellan Strainer meets the performance requirements. Does an 8" strainer have to be supplied to match the piping or will the specified performance govern, thereby allowing 6" strainers to be supplied? Answer: The performance requirements of the strainer is the governing criteria. Please refer to Note 3 on Sheet 65 regarding piping changes

required to accommodate various strainer configurations. A flow velocity below 7 feet per second shall be maintained for all inlet and outlet pipes at the strainers, should piping modifications be required.

25. Question: Need a spec for a basket strainer. Answer: See revised Specification 11176.

26. Question: Can you provide a spec for the floor drains, cleanouts, etc.? 15442 only lists manufacturers. Answer: Provide equipment from vendors listed.

27. Question: Where is the spec for 30" SS force main? Answer: The 30" force main called out as WSS on Sheets 39 and 40 shall be Schedule 5S SS pipe.

28. Question: Need a spec for the expansion joints shown on Sheet 80. Answer: See Specification 15061, Section 2.02.A. For clarification, the expected pressure is 50 psig maximum. US Bellows, Inc. single tied expansion joint fabricated from SS is also acceptable.

29. Question: Tag 23, Sheet 22: If the valve are inoperable then what? There is not a bid item for additional butterfly valves. Should we include all new valves in the bid just in case? Answer: Valves are currently in utilization by plant to isolate basins and are assumed functional.

30. Question: Need more information on the spray nozzles i.e. gpm, spray pattern (cone, flat, mist), pressure, etc. Answer: See revised Sheet 47. For clarification, the water pressure is 90 psi.

31. Question: Can you tell us where 8" drain detail is used? Can't find where it is referenced. Answer: See Sheet 26.

32. Question: WesTech and Headworks are requesting to be named as an acceptable supplier for mechanical bar screen in Specification 11332. Answer: WesTech and Headworks are approved as an Engineer's approved equal. Any modifications to the junction box structure required to accommodate the alternate equipment are at the supplier's cost.

33. Question: Is bypass pumping required to install the scum junction box improvements? Answer: As designed, bypass pumping is not required.

34. Question: Summary of Work 01110, par. 1.01: Please consider removing the requirement for contractors to maintain plant equipment after it is placed in operation. We are not licensed plant operators, and after manufacturer training of City operators is completed, they should be expected to operate and maintain the equipment. We're there to build the project, not maintain the plant. Answer: The City will not allow partial acceptance.

35. Question: Summary of Work 01110, pg. 11. Under digester basin valve replacements it calls for replacing 12 10-inch air butterfly valves. Is this a typo - drawings show 10 ea. Answer: Yes, this is a typo, see revised Specification 01110.

36. Question: Specification 13441: Which firms are approved for the Software Engineering? Answer: Software Engineer shall meet the requirements of Specification 13441, Part 5.

37. Question: Specification 15061, par. 2.03: Where is heat tracing required for this project? Is this required for the oil piping at the blowers? Required for interior piping? Answer: Heat tracing is not required on this project.

38. Question: Is pipe insulation required only for the exterior oil piping? Answer: Pipe insulation is not required for the exterior oil piping.

39. Question: Specification 15061, par. 3.01.H: The insulation schedule calls for insulating all Compressed & Booster Air piping, concealed or exposed. Please confirm that only the air piping inside Blower Building 1 as shown on sheet 18 requires insulation, and that the new/existing exterior airlines and Blower Building 2 air headers DO NOT require insulation. Answer: Confirmed, insulation is only required on the air piping specifically called out on Sheet 18.

40. Question: Specification 13120: Should the precast building have a wall mounted A/C unit? Answer: An air conditioner is not required.

41. Question: Are we to remove all sand and debris from lift station or only enough material to perform the pump replacement? Answer: Contractor is to remove all sand and debris. Note: Pump replacement is not included in this project.

42. Question: The bid item for grit removal includes (Influent channel, RAS Channels, Aeration Basins 1-7, Digester Basins 1-5 and Lift Station as required). Grit removal from a lift station cost 3 to 4 times what it cost for open basins. Can grit removal from this structure be moved to its own bid item? Same for extra units. Answer: See revised Specification 00410B.

43. Question: Currently the extra unit item for grit removal is too low. This bid item should be more like $200 per cubic yard. Answer: The extra unit item prices shown are minimum prices, Contractor may strike value and replace.

44. Question: Please provide structural details for the influent lift station so we know how to design the stop logs. Answer: See the attached plan and section for the lift station from as-built drawings.

45. Question: On sheet 22 it states to repair the 48” x 48” sluice gates between the

RAS channel and Basins 1-7. What is the scope of repair we are to include in the base bid? These gates should probably just be replaced if they do not work. Currently there is an extra unit for 1 ea 48” x 48” sluice gate. This bid item should be increased to include more units. Answer: See revised Sheet 22 and 22A and Specification 00410B.

46. Question: Sheet 14 states that the blowers are to be rehabilitated in 4 weeks. The schedule will be determined by Roots and will be out of our control. We do not see any extra units for blower repair. Is the base bid repair scope extensive enough that no extra units should be needed? Answer: The four week duration indicated is to give the Contractor an estimated time for rehabilitation per Roots. The Contractor will not be bound to the four week timeframe. Yes, no extra unit items are needed for the blower repair.

47. Question: The clarifier effluent junction box is currently full of debris. Will the City clean this out or are we responsible for cleaning it in order to do our work? Answer: The City will perform this work. The Contractor is to provide two week notice to the City.

48. Question: When told to replace stem and guides on page 22A, item #21-23, what spec section should we reference? Answer: See Specification Section 11285.

49. Question: Note 4 - What spec section should be used for these guide rails? Where can I find Record Drawing 18650? Answer: Guide rails are to be supplied by Flygt.

50. Question: General note 9 on sheet 14 says that the sequence of work created for this project assumes the slide gates are operable, but that the operation of the gates can't be guaranteed. If we find gates that are inoperable or won't seal to allow access to work areas, will the City repair the gates or a change order be issued for additional work? Or consider adding extra work items for bypass pumping and gate replacement. You won't get competitive bids if we are asked to assume all risk if the gates don't work. Answer: See revised Specification 00410B.

51. Question: Influent lift station note 4 on sheet 14: does the City have cofferdams or stop logs available for use by the contractor? Answer: No, the City does not have cofferdams or stop logs available.

52. Question: Can we get as-builts of the existing lift station for stop log groove dimensions, etc.? Answer: See the attached plan and section for the lift station from as-built drawings.

53. Question: Influent Lift station note 6 on sheet 14: This note calls for bypass pumping the existing 30" plant drain line. Can as-builts of the 30" drain line be

provided so we know depth, closest manhole, manhole size, etc? Answer: The depth of the line is shown on the section of the lift station. The nearest manhole is in the middle of the street to the north of the lift station. See attached drawings from as-builts.

54. Question: Tag 18 on sheet 22: this note says to exercise 48" sluice gates and repair any that are nonfunctional. This is too open ended. What needs to be repaired? We need a description of repairs for vendor pricing and to ensure contractors bid the same scope. Answer: See revised Sheet 22 and 22A.

55. Question: Note 4 on sheets 22, 27, 28: please clarify what surfaces require the durakote SOD epoxy liner? What thickness is required? Ditto note 1 on sheet 56. Answer: Epoxy is for seal on the concrete surface, thickness as required to achieve adequate seal.

56. Question: Sheet 33: we route the new 24" sludge lines under the existing 54" clarifier feed lines. The 54" piping is aboveground on concrete supports. Please provide details/depth of the existing supports and what is required for replacement supports. Answer: Attached is the only “Pipe Supports” sheet from the original drawings, Sheet S-61.

57. Question: Sheet 35: this drawing calls for DI and steel spools/headers at the RAS pump station. The 30" header around the clarifier structure is stainless steel - Is the transition to SS after the 2Dx30 reducer (tag 16)? Answer: Yes, this is correct.

58. Question: Sheet 80: are the knee brace supports for the 30" SS RAS header Stainless Steel, HDG, or painted steel? Answer: The knee brace supports are HDG.

59. Question: Sheet 39: can electrical as-builts be provided for the areas along the proposed 30" sludge force main routing? Answer: See attached electrical site plan as-built drawings.

60. Question: Reference 01110, par. 1.02.A.J and sheet 98: Is the temporary generator being provided by the City or the contractor? If the contractor, what size generator is required? Answer: Generator must be provided by contractor if needed. Contractor could use the transformers to tap for temporary power.

61. Question: Do we need to grout fill abandoned buried RAS and Air lines? Answer: Pipes to be abandoned in place as shown on plans, grout fill is not required.

62. Question: Sheet 17: Do we demolish the foundations for the existing oil coolers? Answer: Yes, the foundations are included in the demolition.

63. Question: Can we use the overhead crane in Blower Building 1? We will leave in equal or better condition than we started. Answer: Yes, Contractor may use the overhead crane in Blower Building 1. However, as noted above, the crane must be in equal or better condition at the end of work.

64. Question: Can you please tell us the name of the manufacturer for the existing butterfly valves shown on Sheets 22 and 27. Answer: Manufacturer is unknown.

65. Question: Can you please verify the location of the high build epoxy coatings? Answer: There are not any high build epoxy coatings on this project.

66. Question: Does the clarifier get recoated? Answer: No, the clarifier does not get recoated.

67. Question: Sheet 110, Note 3 states "Provide paint coating for floodproofing according to Floodplain Guidelines Chapter 19." Please explain this note. Answer: Delete Note 3.

END OF ADDENDUM NO. 1

DATED: Ravi Kaleyatodi

Ravi Kaleyatodi, P.E., CPM
Senior Assistant Director
Department of Public Works and Engineering

END OF DOCUMENT

Document 00410B

BID FORM – PART B

1.0 TOTAL BID PRICE HAS BEEN CALCULATED BY BIDDER, USING THE FOLLOWING COMPONENT PRICES AND PROCESS (PRINT OR TYPE NUMERICAL AMOUNTS):

A. STIPULATED PRICE: N/A

(Total Bid Price; minus Base Unit Prices, Extra Unit Prices, Cash Allowances and All Alternates, if any)

B. BASE UNIT PRICE TABLE:

Item No.	Spec Ref.	Base Unit Short Title	Unit of Measure	Estimated Quantity	Unit Price (this column controls)	Total in figures
1	01502	Mobilization	LS	1	$250,000(1)	$250,000(1)
2	02101	All work related to removal and disposal of accumulated grit, scum, and solids from the entire influent channel, RAS channels, and aeration basins 1-7 and digester basins 1-5 as required. Contractor is responsible for testing and disposal of sludge or solid waste at a waste disposal facility in accordance with local state and federal regulations.	CY	2,000		
3	02101	All work related to removal and disposal of accumulated grit, scum, and solids from the lift station as required. Contractor is responsible for testing and disposal of sludge or solid waste at a waste disposal facility in accordance with local state and federal regulations.	CY	150		
4	Division 0-16	Lift Station improvements shall be complete in place, as shown on the plans and/or specifications, including but not limited to demolition, protective coating for piping and valves, replacement of access hatches, installation of new guiderails, replacement of valves, temporary power, and permanent electrical improvements.	LS	1		

Item No.	Spec Ref.	Base Unit Short Title	Unit of Measure	Estimated Quantity	Unit Price (this column controls)	Total in figures
5	Division 0-16	Blower Building No. 1 improvements shall be complete in place, as shown on the plans and/or specifications, including but not limited to demolition, rehabilitation of two 800 HP blowers and two 400 HP blowers per specifications, installation of new oil coolers including shed structure, insulation for discharge header, ventilation improvements, temporary power, and permanent electrical improvements.	LS	1		
6	Division 0-16	Aeration Basins improvements shall be complete in place, as shown on the plans and/or specifications, including but not limited to demolition, replacement of MUD valve stems, replacement of air valve motor operator with manual operator, replacement of coarse bubble diffusers, relocation of air supply line and drop (Basin 1 only), installation of weir gates, removal of existing valve actuators, rehabilitation of sluice gates, relocation of sluice gates, installation of inlet channel gates, installation of drain piping, air piping improvements, non-potable water relocation, railing and platform modifications, provision of a portable electric actuator, temporary power, and permanent electrical improvements.	LS	1		
7	Division 0-16	RAS/WAS and ML Pump Stations Basins improvements shall be complete in place, as shown on the plans and/or specifications, including but not limited to demolition, a new RAS centrifugal pump station, WAS/mixed liquor wasting pumps and piping, RAS force main, temporary power, and permanent electrical improvements.	LS	1		

Item No.	Spec Ref.	Base Unit Short Title	Unit of Measure	Estimated Quantity	Unit Price (this column controls)	Total in figures
8	Division 0-16	Clarifier Improvements Basins improvements shall be complete in place, as shown on the plans and/or specifications, including but not limited to demolition, inspection of the clarifiers with reports, replacement of gear drive units, replacement of squeegees, replacement of spray nozzles, temporary power, and permanent electrical improvements.	LS	1		
9	Division 0-16	Clarifier Effluent Junction Box improvements shall be complete in place, as shown on the plans and/or specifications, including but not limited to installation of weir structure, provision of spray water, new concrete channel with drain, mechanical bar screen, sidewalk, stairs, driveway, grading, and permanent electrical improvements.	LS	1		
10	Division 0-16	Blower Building No. 2 improvements shall be complete in place, as shown on the plans and/or specifications, including but not limited to demolition, installation of new oil coolers including shed structure, sidewalk, temporary power, and permanent electrical improvements.	LS	1		
11	Division 0-16	Digester Basin improvements shall be complete in place, as shown on the plans and/or specifications, including but not limited to demolition, installation of weir gates, and valve replacements.	LS	1		
12	Division 0-16	Disinfection System Basin improvements shall be complete in place, as shown on the plans and/or specifications, including but not limited to demolition, louver and fan replacement, door replacement, installation of new feed pumps within an enclosed structure including all necessary piping, connection to existing line, temporary power, and permanent electrical improvements.	LS	1		

Item No.	Spec Ref.	Base Unit Short Title	Unit of Measure	Estimated Quantity	Unit Price (this column controls)	Total in figures
13	Division 0-16	Non-Potable Water System improvements shall be complete in place, as shown on the plans and/or specifications, including but not limited to demolition, installation of new pumps including all valves and piping, installation of strainers, and permanent electrical improvements.	LS	1		
14	Division 0-16	Pavement Improvements shall be complete in place, as shown on the plans and/or specifications, including but not limited to demolition, installation of pavement, subgrade and backfill.	LS	1		
TOTAL BASE UNIT PRICES						**$_____**

C. EXTRA UNIT PRICE TABLE:

Item No.	Spec Ref.	Extra Unit Short Title	Unit of Measure	Estimated Quantity	Unit Price (this column controls)	Total in figures
1	Division 0-16	Bollards	EA	4	$3,500(2)	$14,000(2)
2	02101	Extra removal and disposal of accumulated grit, scum, and solids from the aeration basins, digester basins, and other channels	CY	4,000	$125(2)	$500,000(2)
3	02101	Extra removal and disposal of accumulated grit, scum, and solids from the lift station	CY	70	$150(2)	$10,500(2)
4	02220	Demolition of 48” Diameter Corrugated Pipe in Aeration Basin 1	LS	1	$30,000(2)	$30,000(2)
5	02318	Extra Hand Excavation	CY	100	$15(2)	$1,500(2)
6	02318	Extra Machine Excavation	CY	200	$30(2)	$6,000(2)
7	02318/ 02321	Extra Cement Stabilized sand	CY	100	$50(2)	$5,000(2)
8	03315	Extra Class “A” concrete with or without forms	CY	100	$300(2)	$30,000(2)
9	11218	H119756-209-100 48" Center Pier HDG	EA	4	$25,800(2)	$103,200(2)

10	11218	H119756-210-100 Cage HDG	EA	4	$18,750(2)	$75,000(2)
11	11218	H119756-211-100 Truss HDG	EA	4	$13,800(2)	$55,200(2)
12	11218	H119756-212-100 Tip Truss HDG	EA	4	$9,450(2)	$37,800(2)
13	11218	H119756-228-100 Tie Chord "A" Frame HDG	EA	4	$1,065(2)	$4,260(2)
14	11218	H119756-225-100 Influent Well HDG	EA	4	$8,145(2)	$32,580(2)
15	11218	H119756-225-101 Influent Well HDG	EA	4	$8,168(2)	$32,672(2)
16	11218	H119756-225-201 Influent Well HDG	EA	4	$8,168(2)	$32,672(2)
17	11218	H119756-225-102 Influent Well HDG	EA	4	$8,168(2)	$32,672(2)
18	11218	H119756-225-202 Influent Well HDG	EA	4	$8,168(2)	$32,672(2)
19	11218	H119756-225-103 Influent Well HDG	EA	4	$12,198(2)	$48,792(2)
20	11218	H119756-226-104 Influent Pipe Supports HDG	EA	4	$1,088(2)	$4,352(2)
21	11218	H119756-226-103 Influent Pipe Supports HDG	EA	4	$428(2)	$1,712(2)
22	11218	316 SS FASTENERS Anchors Included	EA	4	$4,200(2)	$16,800(2)
23	11285	48” X 48” SS Sluice Gate	EA	3	$10,000(2)	$30,000(2)
24	11285	72” X 72” SS Sluice Gate	EA	10	$17,500(2)	$175,000(2)
25	15100	12” Mud Valves	EA	4	$2,000(2)	$8,000(2)
26	16120	Copper No. 1/0 AWG conductor with XHHW-2 insulation, installed	LF	400	$5(2)	$2,000(2)
27	16120	Copper No. 4/0 AWG conductor with XHHW-2 insulation, installed	LF	400	$10(2)	$4,000(2)
28	16402	2” PVC Schedule 80 Conduit installed in underground duct bank	LF	400	$3(2)	$1,200(2)
29	16402	4” PVC Schedule 80 Conduit installed in underground duct bank	LF	300	$6(2)	$1,800(2)
30	16402	Duct bank trenching, rebar, concrete encasement and backfill for duct banks	LF	300	$50(2)	$15,000(2)

TOTAL EXTRA UNIT PRICES	$_____ $1,344,384(2)

D. CASH ALLOWANCE TABLE:

Item No.	Spec Ref.	Cash Allowance Short Title	Cash Allowance in figures (1)
1		Permitting Fees	$50,000(1)
TOTAL CASH ALLOWANCES			$50,000(1)

E. ALTERNATES TABLE:

Item No.	Spec Ref.	Alternate Short Title	Unit of Measure	Estimated Quantity	Unit Price (this column controls)	Total Price for Alternate in figures
1		N/A	N/A	N/A	N/A	N/A
TOTAL ALTERNATES						$_____

F. TOTAL BID PRICE: **$**_____
(Add Totals for Items A., B., C., D., and E. above)

2.0 SIGNATURES: By signing this Document, I agree that I have received and reviewed all Addenda and considered all costs associated with the Addenda in calculating the Total Bid Price.

Bidder: _____
(Print or type full name of your proprietorship, partnership, corporation, or joint venture.*)

**By: _____
Signature Date

Name: _____
(Print or type name) Title

Address: _____
(Mailing)

_____
(Street, if different)

Telephone and Fax Number: _____
(Print or type numbers)

* If Bid is a joint venture, add additional Bid Form signature sheets for each member of the joint venture.

** Bidder certifies that the only person or parties interested in this offer as principals are those named above. Bidder has not directly or indirectly entered into any agreement, participated in any collusion, or otherwise taken any action in restraint of free competitive bidding.

Note: This document constitutes a government record, as defined by § 37.01 of the Texas Penal Code. Submission of a false government record is punishable as provided in § 37.10 of the Texas Penal Code.

Footnotes for Tables B through E:
(1) Fixed Unit Price determined prior to Bid. Cannot be adjusted by the Bidder.
(2) Minimum Bid Price determined prior to Bid. Can be increased by the Bidder by crossing out the Minimum and noting revised price on the line above.
(3) Maximum Bid Price determined prior to Bid. Can be decreased but not increased by Bidder by crossing out the Maximum and noting revised price on the line above. A Bid that increases the Maximum Bid Price may be found non-conforming and non-responsive.
(4) Fixed Range Bid Price determined prior to Bid. Unit Price can be adjusted by Bidder to any amount within the range defined by crossing out prices noted and noting revised price on the line above.

2.04 BASKET STRAINER

A. Basket strainers shall be simplex basket strainers with quick opening swinging yoke.

B. The basket strainers shall be designed and constructed for the conditions summarized in Table 11176-F

Table 11176-F: Basket Strainers

Parameter	Value
Number of Units	3
Strainer Flow Rate (gpm/each)	400
Rated Operating Pressure (psi)	150
Operating Water Temperature (F)	60-90
Maximum Allowable Clean Water Pressure Drop (psi)	1.5

C. Manufacturer

1. Acceptable Manufactures

   a. Hellan,
   b. Eaton,
   c. Mueller
   d. Approved equal

2. Listing as an acceptable manufacturer will not relieve the manufacturer from conforming to Contract Specifications.

D. Body

1. Constructed of cast iron, ductile iron, or stainless steel.
2. End connections shall be 8” flanged

E. Screen

1. Constructed on 26 gauge stainless steel
2. ½” diameter staggered perforations with at least 45% open area

F. General

1. All components shall be of ASTM designed materials.
2. Each strainer shall include a 2” NPT drain.

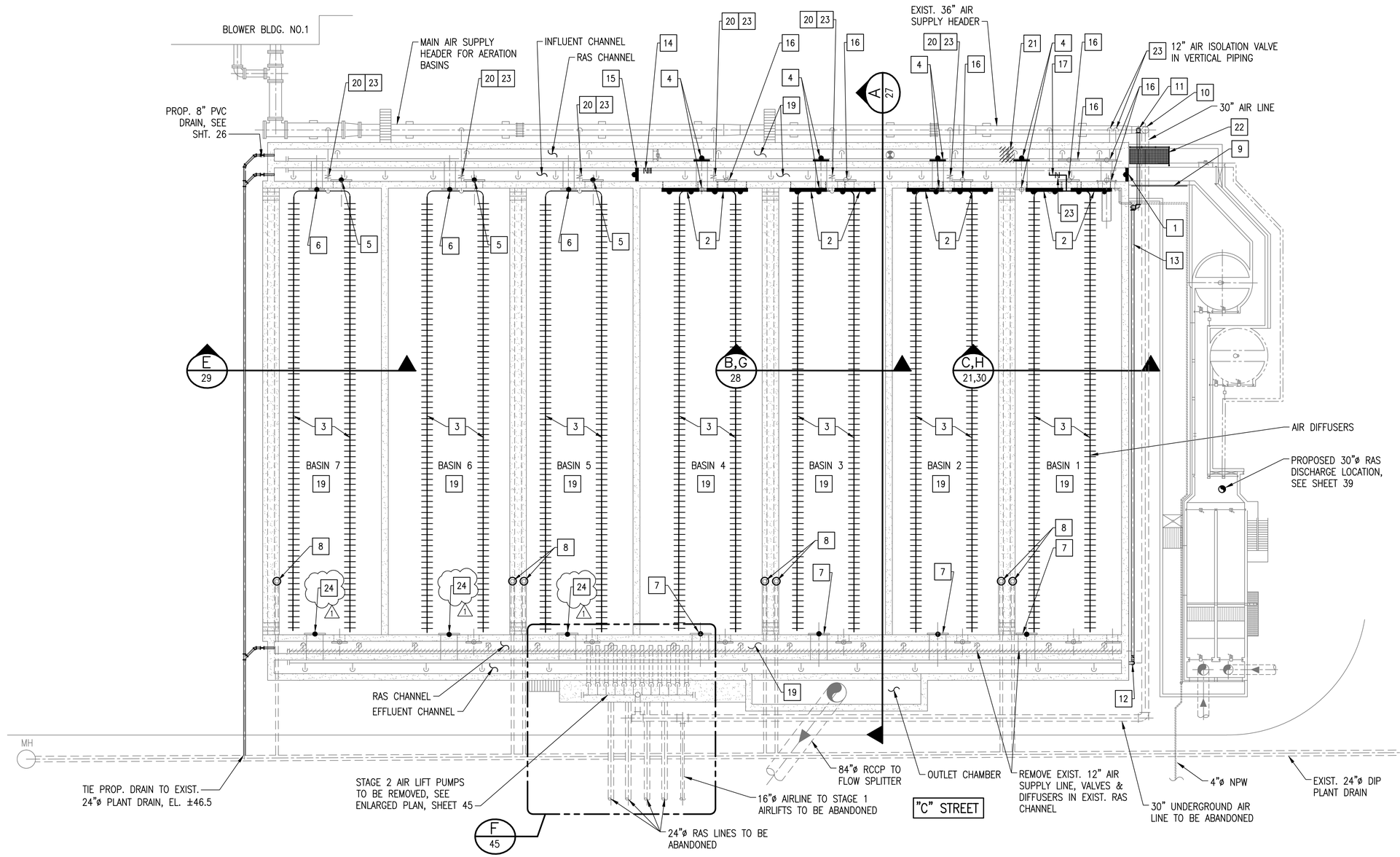

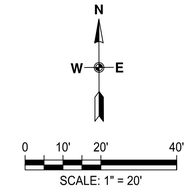

NOTES:

1. LIMITS OF HANDRAIL ARE NOT SHOWN ON THIS DRAWING, SEE SHEET 31 AND STRUCTURAL SHEET 85.
2. ASBESTOS STUDY CONDUCTED BY COH INDICATES THE PAINT ON THE EXTERIOR OF THE EXIST. FLOOR STANDS IS LEAD CONTAMINATED. CONTRACTOR SHALL COMPLY WITH LOCAL, STATE, AND FEDERAL REGULATIONS FOR REMOVAL.
3. CONTRACTOR TO PROVIDE MODEL 25 PORTABLE ELECTRIC OPERATOR MANUFACTURED BY RODNEY HUNT OR ENGINEER APPROVED EQUAL TO WASTEWATER OPERATIONS AS PART OF AERATION BASIN IMPROVEMENTS.
4. CLEAN CUT SURFACES OF DEBRIS AND APPLY DURAKOTE 500 OR EQUIVALENT EPOXY LINER PER MANUFACTURER'S INSTALLATION AND INSPECTION PROCEDURES.
5. WEIR GATE ADHESIVE ANCHORS SHALL BE STAINLESS STEEL. MANUFACTURER SHALL PROVIDE ENGINEERED ANCHOR BOLT DESIGN FOR THE WEIR GATE.
6. STRUCTURAL OPENING AND WEIR GATE MOUNTING SHALL BE COORDINATED WITH WEIR GATE MANUFACTURER.
7. CONTRACTOR TO FIELD VERIFY PROPOSED WEIR GATE DIMENSIONS.

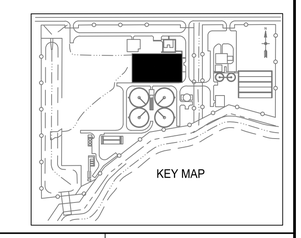

AERATION BASINS PIPING & EQUIPMENT SCHEDULE

TAG	DESCRIPTION
1	PROPOSED NEW FABRICATED STAINLESS STEEL WEIR GATE, SURFACE MOUNTED, SEE NOTES 4–7
2	PROPOSED NEW INLET WEIR GATES, 16' LONG X 3' TRAVEL W/CRANK TYPE LIFTS, STEMS & STEM GUIDES (TYPICAL 8), SEE SECTION 'A' SHT. 27, SECTION 'B' SHT. 28 & SECTION 'C' SHT. 21, & NOTES 4–7
3	REPLACE AIR HEADERS AND DIFFUSERS IN BASINS 1–7 (TYPICAL 14), SEE SECTION 'A' SHT. 27, SECTION 'B' SHT. 28, SECTION 'C' SHT. 21 & SECTION 'E' SHT. 29
4	REMOVE 48"X48" INLET SLUICE GATES IN BASINS 1,2,3&4 (TYPICAL 4) AND INSTALL NEW 48"X48" SLUICE GATES INCLUDING STEMS, GUIDES AND FLOOR STANDS AS INDICATED, SEE SECTION 'A' SHT. 27, SECTION 'B' SHT. 28 & SECTION 'C' SHT. 21
5	REPLACE ELECTRIC VALVE ACTUATORS, STEMS & GUIDES ON EXIST. 72"X72" INLET SLUICE GATES IN BASINS 5.6&7 (TYPICAL 3), SEE SECTION 'E', SHT. 29

AERATION BASINS PIPING & EQUIPMENT SCHEDULE CONT.

TAG	DESCRIPTION
6	xxxREPLACE STEMS, GUIDES AND FLOOR STANDS ON EXIST. 48"X48" INLET SLUICE GATES IN BASINS 5,6&7 (TYPICAL 3), SEE SECTION 'E', SHT. 29
7	REPLACE STEMS AND GUIDES ON EXIST. 72"X72" OUTLET SLUICE GATES IN BASINS 1,2,3&4 (TYPICAL 4), SEE SECTION 'A', SHT. 27
8	REPLACE ALL MUD VALVES EXTENSION STEMS AND STEM GUIDES (TYPICAL 7), SEE SECTION 'A', SHT. 27
9	RAISE WEIR CREST TO EL. 81.00
10	PLUG EXIST. 30" AIR LINE WITH WELDED CAP & ABANDON IN PLACE TO STAGE 1&2 AIR LIFT PUMPS
11	TIE PROP. 12" AIRLINE TO EXIST. 30" AIR SUPPLY HEADER, SEE DETAILS SHEET 31
12	TIE PROP. 12" SS AIR LINE TO EFFLUENT CHANNEL AIR SUPPLY LINE, SEE DETAIL SHEET 31

AERATION BASINS PIPING & EQUIPMENT SCHEDULE CONT.

TAG	DESCRIPTION
13	PROPOSED 12" SS AIRLINE ATTACHED TO WALL, SEE DETAILS SHEET 84
14	INSTALL 12" BUTTERFLY VALVE AND COUPLING IN EXIST. AIR SUPPLY LINE FOR ISOLATION
15	INSTALL CONCRETE WALL WITH STAINLESS STEEL WEIR GATE, (4" DRAIN SLEEVE AND 1–4" WALL DRAIN VALVE,) SEE DETAIL SHEET 84 & NOTES 4–7 (1)
16	REMOVE EXIST. VALVE ACTUATOR AND STEM (1)
17	PROPOSED 16"ø BUTTERFLY VALVE & NEW FABRICATED 16"ø SS AIR SUPPLY PIPE & DROP TO DIFFUSER HEADERS, SEE SHEET 23
18	TAG NOT USED (1)
19	CONTRACTOR TO CLEAN BASINS 1–7, INFLUENT CHANNEL & RAS CHANNELS INCLUDING ALL DEBRIS AS SEEN ON SHEET 29, SEE SPEC 00410B FOR ESTIMATED QUANTITY

AERATION BASINS PIPING & EQUIPMENT SCHEDULE CONT.

TAG	DESCRIPTION
20	xxxREPLACE EXISTING FLOOR STAND ON 16" (TYP. 6) AIR ISOLATION VALVES W/MANUAL OPERATOR FLOOR STAND, SEE NOTE 2
21	DEMO EXIST. 3'X5' GATE AND 4'–9"X12"X24.5' REINFORCED CONCRETE WALL
22	PROPOSED PLATFORM, SEE SHEETS 31 AND 85
23	CONTRACTOR TO VERIFY OPERATION OF EXIST. 12" (TYP. 2) & 16" (TYP. 7) AIR ISOLATION VALVES AS SHOWN AND NOTIFY ENGINEER IMMEDIATELY IF ANY ARE INOPERABLE
24	INSTALL ELECTRIC VALVE ACTUATORS, STEMS & GUIDES ON EXISTING 72"X72" OUTLET SLUICE GATES IN BASINS 5.6&7 (TYPICAL 3), SEE SECTION 'E', SHT. 29

REV NO	DESCRIPTION	APP'D	DATE
1	GATE VALVE MODIFICATIONS, 4" DRAIN SLEEVE & VALVE		

ATKINS
1250 WOOD BRANCH PARK DR., STE. 200
HOUSTON, TEXAS 77079
(281) 493-5100
TBPE REG. NO. F-474

STATE OF TEXAS — Robert Thomas McCarty — 50064 — LICENSED PROFESSIONAL ENGINEER

07/22/2015

CITY OF HOUSTON
DEPARTMENT OF PUBLIC WORKS AND ENGINEERING

KEEGANS BAYOU WWTP IMPROVEMENTS

AERATION BASINS OVERALL PIPING AND EQUIPMENT PLAN

WBS NUMBER	R-000265-0101-4
DRAWING SCALE	AS SHOWN
CITY OF HOUSTON PM	BILL ZOD, P.E.
SHEET NO.	22 OF 185

Sep 17, 2015 – 2:18pm mike3082 K:\Projects\Inf\1\10003983–Keegans Bayou WWTP\DESIGN\WWTP\ KEB–AB–00.dwg

ADDENDUM NO. 1

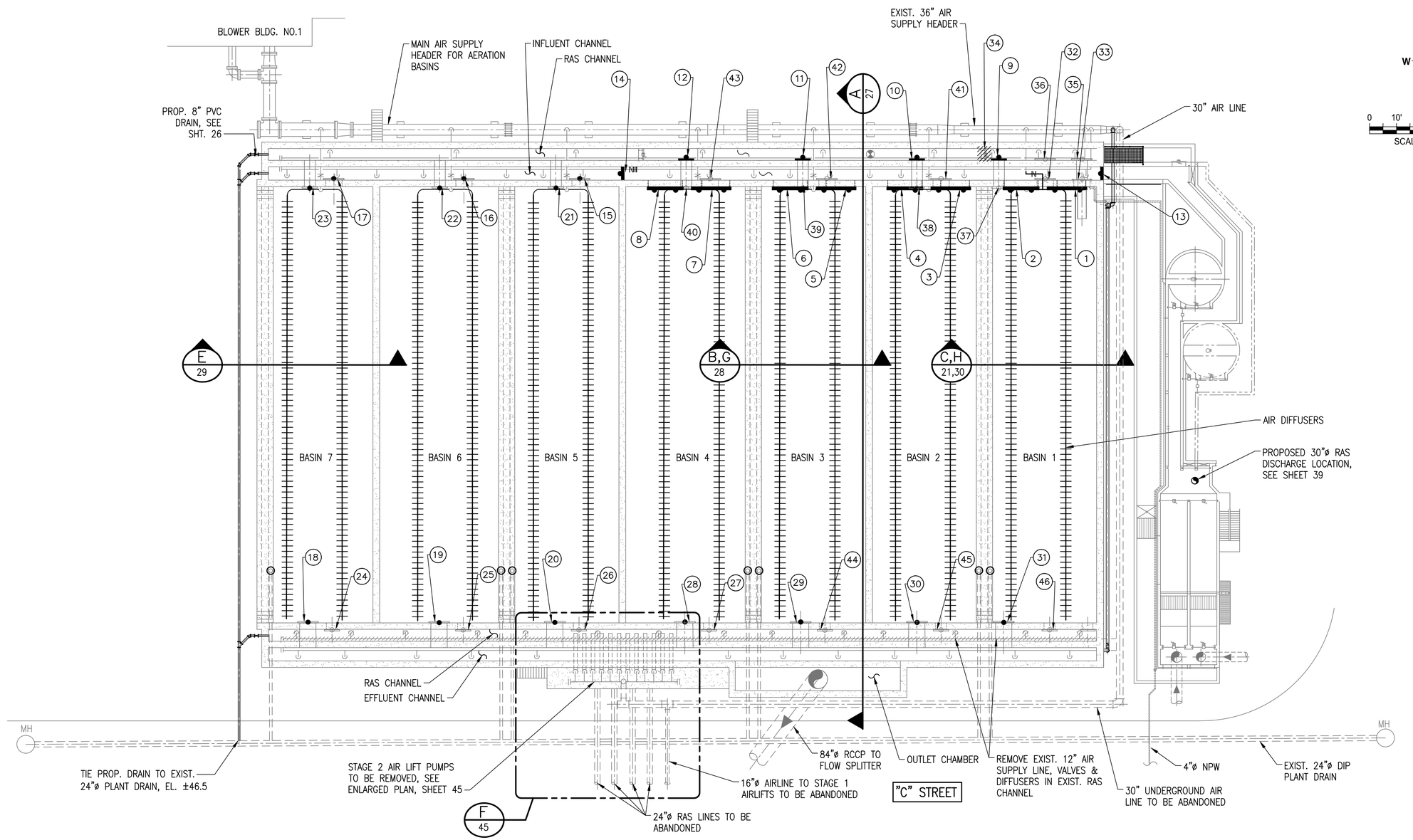

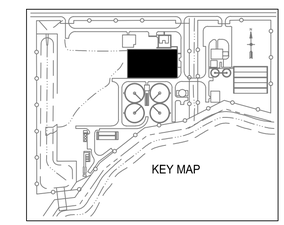

GATE SCHEDULE

TAG	GATE TYPE	DESCRIPTION	PROPOSED IMPROVEMENT	LOCATION
1	NEW INLET WEIR GATE	16'Lx3' TRAVEL W/CRANK TYPE LIFTS COMPLETE	NEW WEIR GATE	BASIN 1, EAST INLET
2	NEW INLET WEIR GATE	16'Lx3' TRAVEL W/CRANK TYPE LIFTS COMPLETE	NEW WEIR GATE	BASIN 1, WEST INLET
3	NEW INLET WEIR GATE	16'Lx3' TRAVEL W/CRANK TYPE LIFTS COMPLETE	NEW WEIR GATE	BASIN 2, EAST INLET
4	NEW INLET WEIR GATE	16'Lx3' TRAVEL W/CRANK TYPE LIFTS COMPLETE	NEW WEIR GATE	BASIN 2, WEST INLET
5	NEW INLET WEIR GATE	16'Lx3' TRAVEL W/CRANK TYPE LIFTS COMPLETE	NEW WEIR GATE	BASIN 3, EAST INLET
6	NEW INLET WEIR GATE	16'Lx3' TRAVEL W/CRANK TYPE LIFTS COMPLETE	NEW WEIR GATE	BASIN 3, WEST INLET
7	NEW INLET WEIR GATE	16'Lx3' TRAVEL W/CRANK TYPE LIFTS COMPLETE	NEW WEIR GATE	BASIN 4, EAST INLET
8	NEW INLET WEIR GATE	16'Lx3' TRAVEL W/CRANK TYPE LIFTS COMPLETE	NEW WEIR GATE	BASIN 4, WEST INLET
9	NEW INLET SLUICE GATE	48"x48" W/STEM, GUIDES, & FLOOR STANDS	REPLACES EXISTING	BASIN 1, INLET
10	NEW INLET SLUICE GATE	48"x48" W/STEM, GUIDES, & FLOOR STANDS	REPLACES EXISTING	BASIN 2, INLET
11	NEW INLET SLUICE GATE	48"x48" W/STEM, GUIDES, & FLOOR STANDS	REPLACES EXISTING	BASIN 3, INLET
12	NEW INLET SLUICE GATE	48"x48" W/STEM, GUIDES, & FLOOR STANDS	REPLACES EXISTING	BASIN 4, INLET

GATE SCHEDULE, CONT.

TAG	GATE TYPE	DESCRIPTION	PROPOSED IMPROVEMENT	LOCATION
13	NEW WALL MOUNTED WEIR GATE	4'-9" OPENING X 11' TRAVEL	NEW FABRICATED S.S. WEIR GATE	INLET CHANNEL
14	NEW SIDE MOUNTED WEIR GATE	4'-9" OPENING X 11' TRAVEL	NEW S.S. WEIR GATE	INLET CHANNEL
15	EXIST. INLET SLUICE GATE	72"x72"	REPLACE ELEC. ACTUATOR, STEM, & GUIDES	BASIN 5, EAST INLET
16	EXIST. INLET SLUICE GATE	72"x72"	REPLACE ELEC. ACTUATOR, STEM, & GUIDES	BASIN 6, EAST INLET
17	EXIST. INLET SLUICE GATE	72"x72"	REPLACE ELEC. ACTUATOR, STEM, & GUIDES	BASIN 7, EAST INLET
18	EXIST. INLET SLUICE GATE	72"x72"	INSTALL ELEC. ACTUATOR, STEM, & GUIDES	BASIN 7, WEST OUTLET
19	EXIST. INLET SLUICE GATE	72"x72"	INSTALL ELEC. ACTUATOR, STEM, & GUIDES	BASIN 6, WEST OUTLET
20	EXIST. INLET SLUICE GATE	72"x72"	INSTALL ELEC. ACTUATOR, STEM, & GUIDES	BASIN 5, WEST OUTLET
21	EXIST. INLET SLUICE GATE	48"x48"	REPLACE FLOOR STAND, STEM, & GUIDES	BASIN 5, WEST INLET

GATE SCHEDULE, CONT.

TAG	GATE TYPE	DESCRIPTION	PROPOSED IMPROVEMENT	LOCATION
22	EXIST. INLET SLUICE GATE	48"x48"	REPLACE FLOOR STAND, STEM, & GUIDES	BASIN 6, WEST INLET
23	EXIST. INLET SLUICE GATE	48"x48"	REPLACE FLOOR STAND, STEM, & GUIDES	BASIN 7, WEST INLET
24	EXIST. OUTLET SLUICE GATE	48"x48"	NONE	BASIN 7, EAST OUTLET
25	EXIST. OUTLET SLUICE GATE	48"x48"	NONE	BASIN 6, EAST OUTLET
26	EXIST. OUTLET SLUICE GATE	48"x48"	NONE 1	BASIN 5, EAST OUTLET
27	EXIST. OUTLET SLUICE GATE	48"x48"	NONE	BASIN 4, EAST OUTLET
28	EXIST. OUTLET SLUICE GATE	72"x72"	REPLACE STEM & GUIDES	BASIN 4, WEST INLET
29	EXIST. OUTLET SLUICE GATE	72"x72"	REPLACE STEM & GUIDES	BASIN 3, WEST INLET
30	EXIST. OUTLET SLUICE GATE	72"x72"	REPLACE STEM & GUIDES	BASIN 2, WEST INLET
31	EXIST. OUTLET SLUICE GATE	72"x72"	REPLACE STEM & GUIDES	BASIN 1, WEST INLET
32	EXIST. INLET SLUICE GATE	72"x72" (CLOSED)	REMOVE EXIST. OPERATOR & STEM	BASIN 1, WEST INLET
33	EXIST. INTLET SLUICE GATE	72"x72" (CLOSED)	REMOVE EXIST. OPERATOR & STEM	BASIN 1, EAST INLET
34	EXIST. GATE	3'x5'	DEMO EXIST. GATE	RAS CHANNEL

GATE SCHEDULE, CONT.

TAG	GATE TYPE	DESCRIPTION	PROPOSED IMPROVEMENT	LOCATION
35	EXIST. INLET SLUICE GATE	72"x72"	REMOVE EXIST. OPERATOR & STEM	RAS CHANNEL
36	EXIST. INLET SLUICE GATE	72"x72"	REMOVE EXIST. OPERATOR & STEM	RAS CHANNEL
37	EXIST. INLET SLUICE GATE	48"x48"	REMOVE SLUICE GATE, STEM, STEM GUIDES & OPERATOR	BASIN 1, WEST INLET
38	EXIST. INLET SLUICE GATE	48"x48"	REMOVE SLUICE GATE, STEM, STEM GUIDES & OPERATOR	BASIN 2, WEST INLET
39	EXIST. INLET SLUICE GATE	48"x48"	REMOVE SLUICE GATE, STEM, STEM GUIDES & OPERATOR	BASIN 3, WEST INLET
40	EXIST. INLET SLUICE GATE	48"x48"	REMOVE SLUICE GATE, STEM, STEM GUIDES & OPERATOR	BASIN 4, WEST INLET
41	EXIST. INLET SLUICE GATE	72"x72"	REMOVE OPERATOR & STEM	BASIN 2, EAST INLET
42	EXIST. INLET SLUICE GATE	72"x72"	REMOVE OPERATOR & STEM	BASIN 3, EAST INLET
43	EXIST. INLET SLUICE GATE	72"x72"	REMOVE OPERATOR & STEM	BASIN 4, EAST INLET
44	EXIST. OUTLET SLUICE GATE	48"x48"	1 NONE	BASIN 3, EAST OUTLET

GATE SCHEDULE, CONT.

TAG	GATE TYPE	DESCRIPTION	PROPOSED IMPROVEMENT	LOCATION
45	EXIST. OUTLET SLUICE GATE	48"x48"	NONE 1	BASIN 2, EAST OUTLET
46	EXIST. OUTLET SLUICE GATE	48"x48"	NONE	BASIN 1, EAST OUTLET

REV NO	DESCRIPTION	APP'D	DATE
1	GATE VALVE MODIFICATIONS		

ATKINS
1250 WOOD BRANCH PARK DR., STE. 200
HOUSTON, TEXAS 77079
(281) 493-5100
TBPE REG. NO. F-474

STATE OF TEXAS
Robert Thomas McCarty
50064
LICENSED PROFESSIONAL ENGINEER
07/22/2015

CITY OF HOUSTON
DEPARTMENT OF PUBLIC WORKS AND ENGINEERING

KEEGANS BAYOU WWTP IMPROVEMENTS

AERATION BASINS GATE SCHEDULE

WBS NUMBER	R-000265-0101-4
DRAWING SCALE	AS SHOWN
CITY OF HOUSTON PM	BILL ZOD, P.E.

SHEET NO. 22A OF 185

ADDENDUM NO. 1

Sep 16, 2015 – 12:02pm mike3082 K:\Projects\H\100033883--Keegans Bayou WWTP\DESIGN\WWTP\ KEB-AB-00.dwg

1 DRIVE UNIT W/GEAR DRIVE

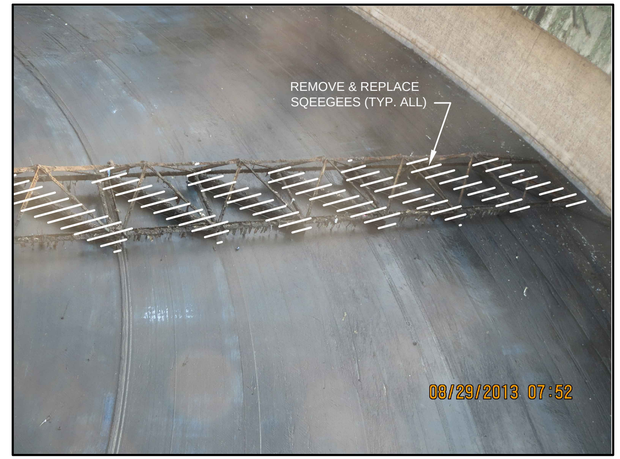

2 SQUEEGEES

3 SPRAY NOZZELS

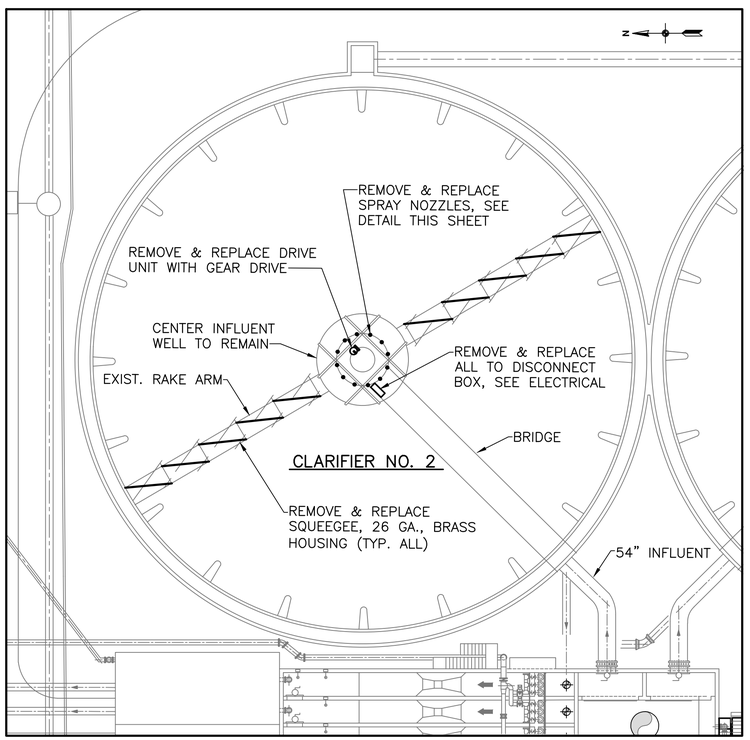

PLAN
SCALE: 1"=20'-0"

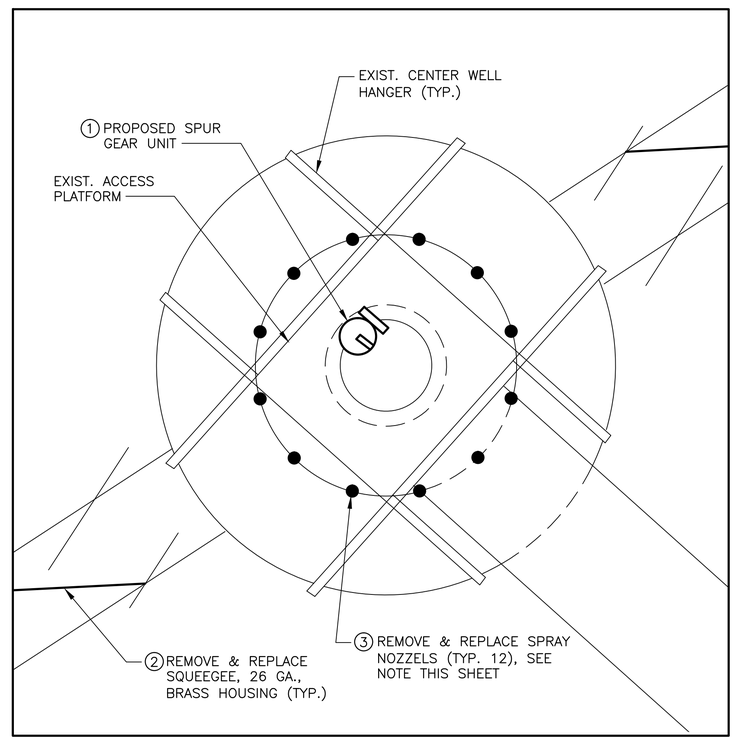

PLAN
SCALE: 1/4"=1'-0"

1

SPRAY NOZZELS

FOAM SUPPRESSOR SYSTEM WITH 12 EQUALLY SPACED 3/8-INCH SPIRAL JET SPRAY NOZZLES BY SPRAYING SYSTEMS CO. CAPACITY SIZE 30 WITH A FREE PASSAGE SIZE OF 1/8-INCH AND A 120 DEGREE SPRAY ANGLE. EACH NOZZLE TO BE MOUNTED ON AN ADJUSTABLE BALL FITTING. THE CONTRACTOR SHALL COORDINATE SPACING, SPRAY ANGLE AND MANUFACTURER TO INSURE UNIFORM COVERAGE. SPRAY NOZZLES SHALL BE ARRANGED TO MINIMIZE AND WATER JET CONTACT TO THE CENTER WELL SUPPORT MEMBERS. SUBMIT SHOP DRAWINGS IN ACCORDANCE WITH 01330.

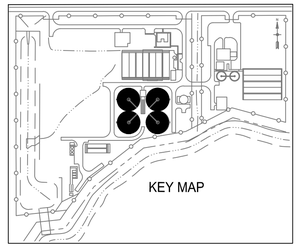

REV NO	DESCRIPTION	APP'D	DATE
1	REVISED SPRAY NOZZEL NOTE		

ATKINS
1250 WOOD BRANCH PARK DR., STE. 200
HOUSTON, TEXAS 77079
(281) 493-5100
TBPE REG. NO. F-474

STATE OF TEXAS
Robert Thomas McCarty
50064
LICENSED
PROFESSIONAL ENGINEER

07/22/2015

CITY OF HOUSTON
DEPARTMENT OF PUBLIC WORKS AND ENGINEERING

KEEGANS BAYOU WWTP IMPROVEMENTS

CLARIFIER DEMOLITION & IMPROVEMENTS

WBS NUMBER	
R-000265-0101-4	
DRAWING SCALE	
AS SHOWN	
CITY OF HOUSTON PM	
BILL ZOD, P.E.	
SHEET NO. 47 OF 185	

ADDENDUM NO. 1

Sep 16, 2015 - 12:33pm mike3082 K:\Projects\Vol1\100033883-Keegans Bayou WWTP\DESIGN\WWTP\ KEB-CLAR-00.DWG

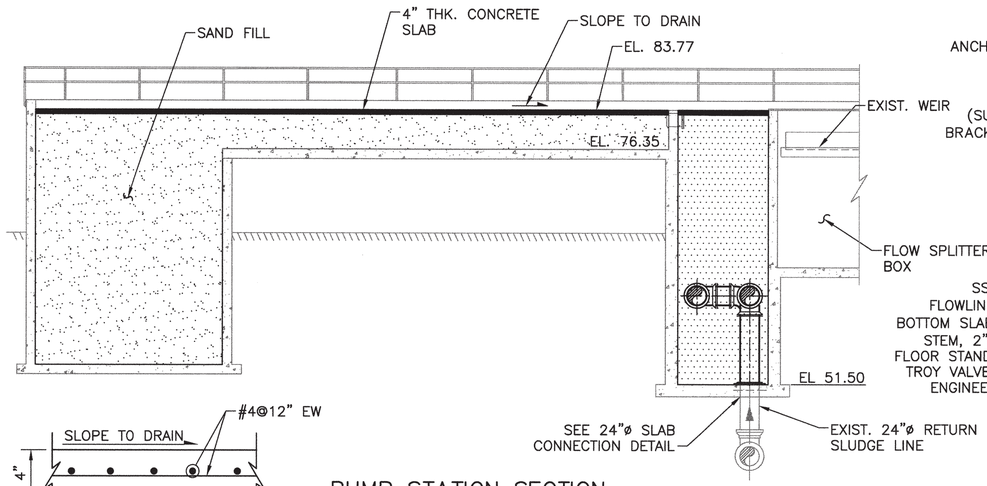

PUMP STATION SECTION
SCALE: 1/8"=1'-0"

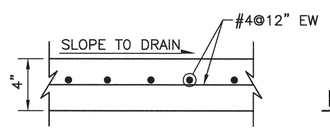

DETAIL
SCALE: NTS

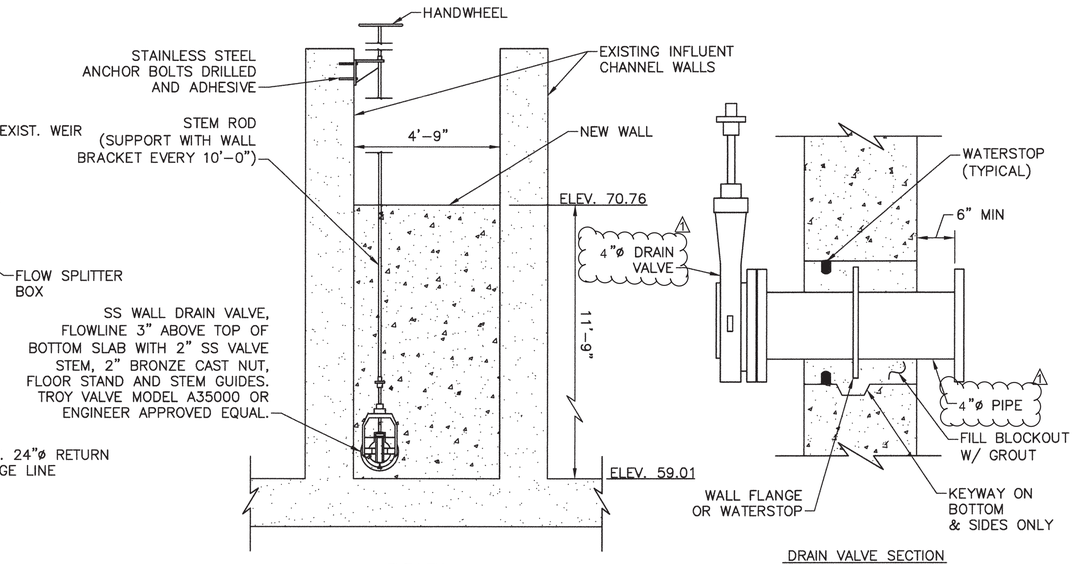

ELEVATION

DRAIN VALVE SECTION

WEIR GATE WALL
NTS

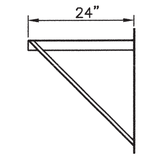

SOUTHERN FAB & SUPPORTS INC. FIG. 132 OR EQUIVALENT

1. PROPOSED 12"ø AIRLINE ATTACHED TO AERATION BASIN WALL

2. 10'-0" C-C MAXIMUM SPACING

WELDED STEEL BRACKET
NTS

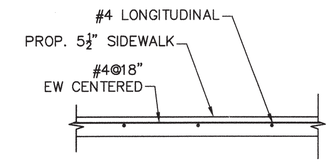

SIDEWALK DETAIL
NTS

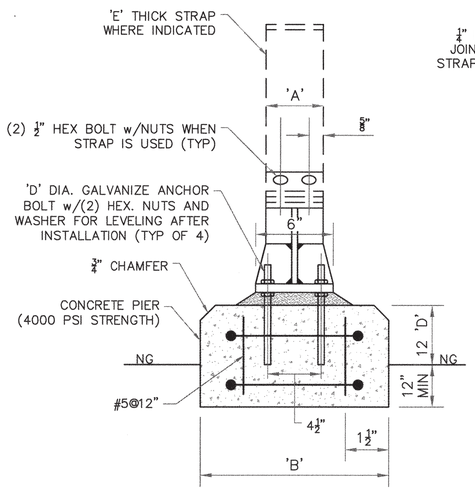

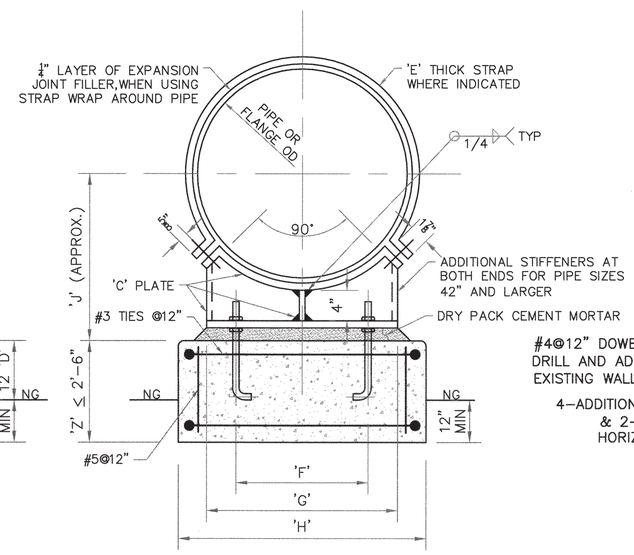

NOTES:
1. WHEN SUPPORTING PIPE & FLANGE ALTERNATELY ON THE SAME LINE, CONCRETE PIERS FOR PIPE SUPPORTS SHALL HAVE SAME DIMENSION 'H' FOR FLANGE SUPPORT.
2. GALVANIZE AFTER FABRICATION
3. WHERE UTILIZED UNDER BENDS, OR OTHERWISE SKEWED, DIMENSIONS TO BE INCREASED & SADDLE FABRICATED AS ACCEPTABLE TO ENGINEER.
4. IF 'Z' IS 6" OR LESS. OMIT REINFORCING STEEL. ANCHOR BOLTS TO PROJECT MIN 6" INTO FLOOR.
5. SADDLE PIPE SUPPORT MAXIMUM SPACING 8'-0" C-C.

DIMENSION IN INCHES													
NOMINAL PIPE SIZE						SUPPORTING							
						PIPE				FLANGE			
	'A'	'B'	'C'	'D'	'E'	'F'	'G'	'H'	'J'	'F'	'G'	'H'	'J'
12"	4	12	3/8	5/8	1/4	7	13	18	13	10	17	22	16
20"	5	12	3/8	5/8	3/8	10	18	24	17	15	23	28	21
22"	5	12	3/8	5/8	3/8	12	19	24	18	16	25	30	22
24"	5	12	3/8	5/8	3/8	13	21	26	19	16	26	32	23
26"	5	12	3/8	3/4	3/8	14	22	28	20	18	28	34	24
30"	5	12	3/8	3/4	3/8	16	25	30	22	20	31	36	26

SADDLE PIPE SUPPORT WITH OR WITHOUT STRAP

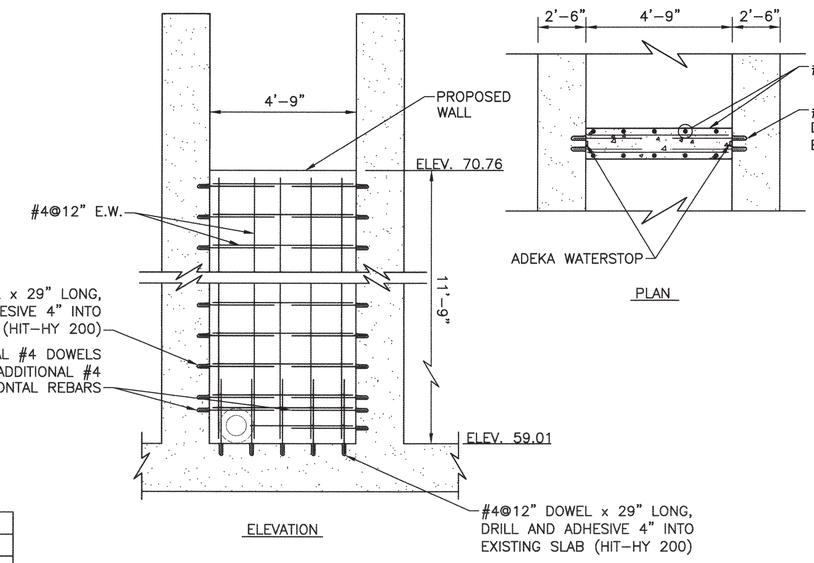

ELEVATION

PLAN

WEIR GATE WALL REINFORCEMENT
NTS

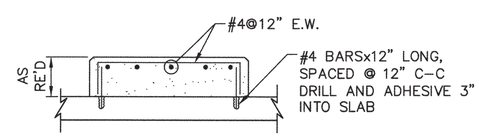

ML-WAS PUMP PAD
NTS

REV NO	DESCRIPTION	APP'D	DATE
1	DRAIN VALVE MODIFICATION		

SEI STIVER ENGINEERING, INC
1305 Peden Street, Houston, Texas 77006-1123
(713) 526-3478 • Fax (713) 526-5052
www.stivereng.com
Texas Registration No. F-190

ATKINS
1250 WOOD BRANCH PARK DR., STE. 200
HOUSTON, TEXAS 77079
(281) 493-5100
TBPE REG. NO. F-474

STATE OF TEXAS
JOHN M. STIVER
105179
LICENSED PROFESSIONAL ENGINEER
06-23-15
STIVER ENGINEERING, INC. F-190

CITY OF HOUSTON
DEPARTMENT OF PUBLIC WORKS AND ENGINEERING

KEEGANS BAYOU WWTP IMPROVEMENTS

GENERAL DETAILS

WBS NUMBER	R-000265-0101-4
DRAWING SCALE	AS SHOWN
CITY OF HOUSTON PM	BILL ZOD, P.E.
SHEET NO.	84 OF 185

ACCEPTED AND FILED
54607
DRAWING NUMBER

ADDENDUM NO. 1

Jun 23, 2015 - 2:57pm cad2 F:\SEI\PROJECTS\2015 Projects\15009-ATKINS-Robert McCarty-Keegans Bayou WWTP-Structural Engineering Verification\15009 CADD\ SEI_KEB-RAS_PS-01-E.dwg

NOTES:

1. PROVIDED BY SCUM SCREEN MANUFACTURER.
2. PROVIDED BY CLARIFIER MANUFACTURER.

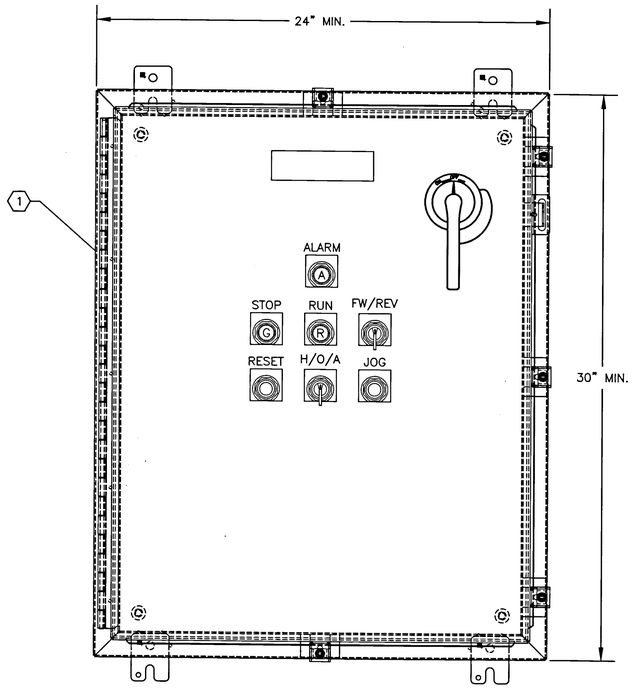

SCUM SCREEN
NEMA 4X 316SS VENDOR CONTROL PANEL

DETAIL 1
NTS

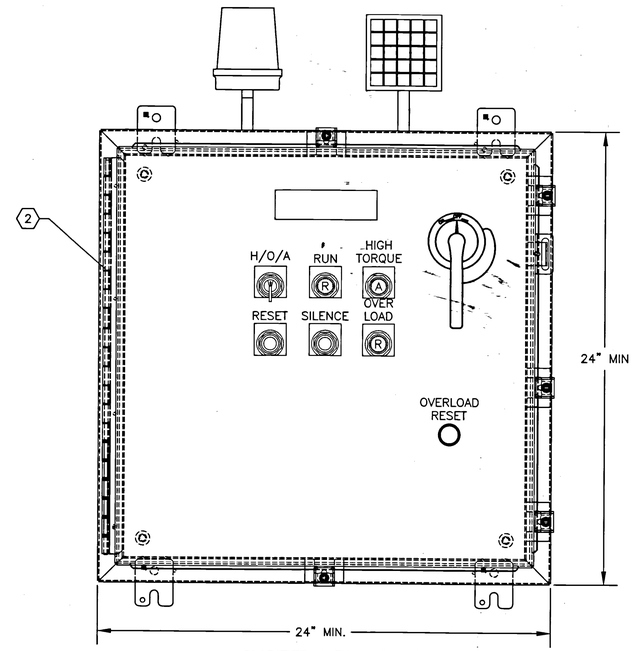

CLARIFIER 1 TO 4 (TYP.)
NEMA 4X 316SS VENDOR CONTROL PANEL

DETAIL 2
NTS

REV NO	DESCRIPTION	APP'D	DATE

I-47

GAI
Gupta & Associates, Inc.
consulting engineering
Registration No. F-2593
7322 Southwest Freeway, Suite 410
Houston, Texas 77074
Tel: 713-636-2936
Fax: 713-636-2987
email: hforouzan@gaiconsulting.com

ATKINS
1250 WOOD BRANCH PARK DR., STE. 200
HOUSTON, TEXAS 77079
(281) 493-5100
TBPE REG. NO. F-474

STATE OF TEXAS
H. A. FOROUZAN
77748
REGISTERED PROFESSIONAL ENGINEER
06/25/15

CITY OF HOUSTON
DEPARTMENT OF PUBLIC WORKS AND ENGINEERING

KEEGANS BAYOU WWTP IMPROVEMENTS

INSTRUMENTATION
SCUM SCREEN & CLARIFIER
CONTROL PANEL DETAIL

WBS NUMBER	
R-000265-0101-4	
DRAWING SCALE	
NOT TO SCALE	
CITY OF HOUSTON PM	
BILL ZOD, P.E.	
SHEET NO. 185 OF 185	

54607

ADDENDUM NO. 1

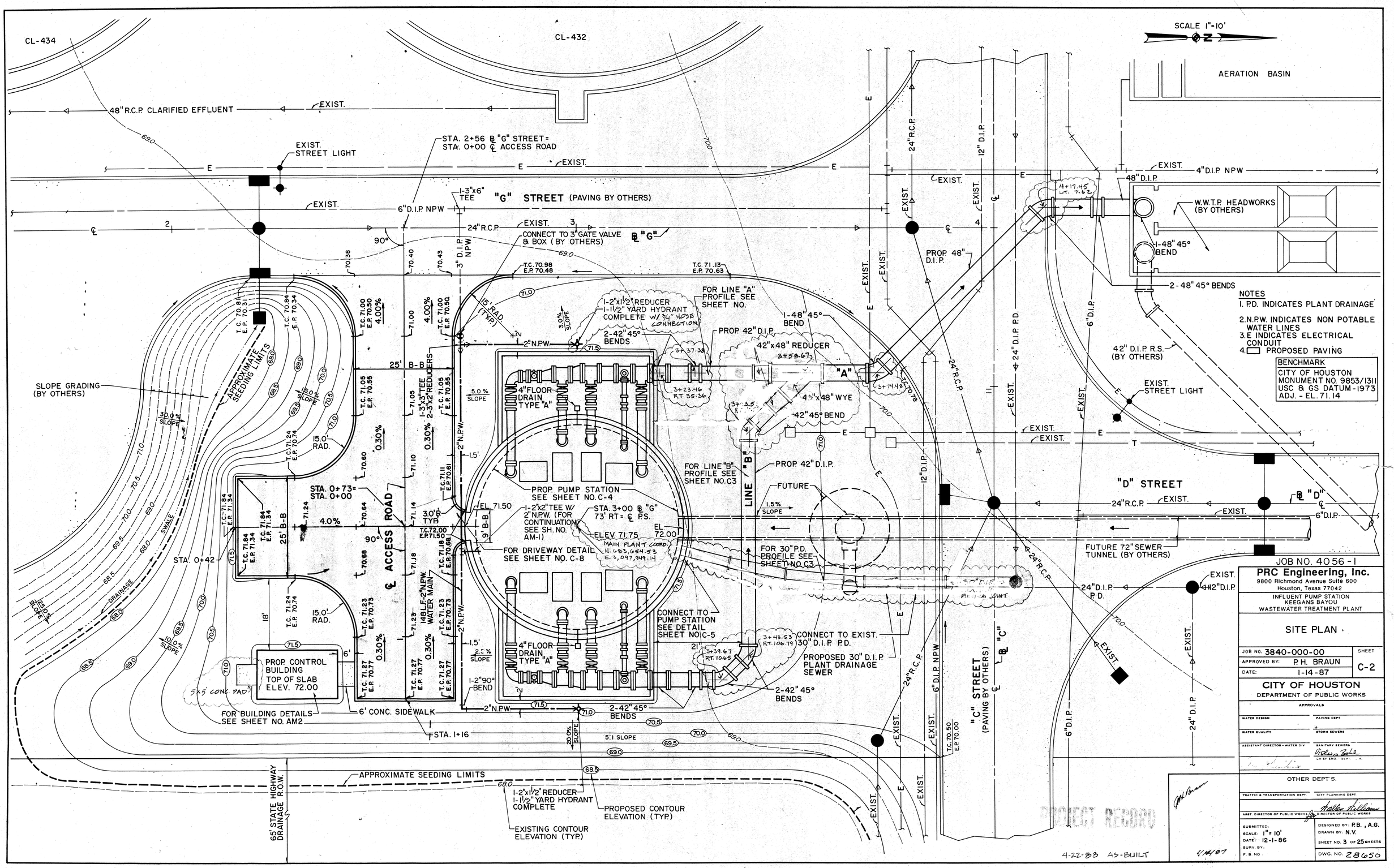
SCALE 1"=10'
CL-434
CL-432
AERATION BASIN
48" R.C.P. CLARIFIED EFFLUENT
EXIST.
STA. 2+56 ℄ "G" STREET = STA. 0+00 ℄ ACCESS ROAD
EXIST. STREET LIGHT
"G" STREET (PAVING BY OTHERS)
6" D.I.P. NPW
24" R.C.P.
CONNECT TO 3" GATE VALVE & BOX (BY OTHERS)
3" D.I.P. NPW
T.C. 70.98 E.P. 70.48
T.C. 71.13 E.P. 70.63
FOR LINE "A" PROFILE SEE SHEET NO.
1-2"x1½" REDUCER
1-1½" YARD HYDRANT COMPLETE W/ ¾" HOSE CONNECTION
2-42" 45° BENDS
PROP. 42" D.I.P.
42"x48" REDUCER
1-48" 45° BEND
4½"x48" WYE
42" 45° BEND
"A"
4" FLOOR DRAIN TYPE "A"
PROP. PUMP STATION SEE SHEET NO. C-4
FOR LINE "B" PROFILE SEE SHEET NO. C3
LINE "B"
FUTURE
1.5% SLOPE
1-2"x2" TEE W/ 2" N.P.W. (FOR CONTINUATION SEE SH. NO. AM-1)
STA. 3+00 ℄ "G" 73' RT = ℄ P.S.
ELEV. 71.75
MAIN PLANT COORD. N. 683,654.53 E. 3,097,949.14
FOR DRIVEWAY DETAIL SEE SHEET NO. C-8
FOR 30" P.D. PROFILE SEE SHEET NO. C3
CONNECT TO PUMP STATION SEE DETAIL SHEET NO. C-5
CONNECT TO EXIST. 30" D.I.P. P.D.
PROPOSED 30" D.I.P. PLANT DRAINAGE SEWER
2-42" 45° BENDS
1-2" 90° BEND
2" N.P.W.
SLOPE GRADING (BY OTHERS)
APPROXIMATE SEEDING LIMITS
STA. 0+73 = STA. 0+00
℄ ACCESS ROAD
STA. 0+42
PROP. CONTROL BUILDING TOP OF SLAB ELEV. 72.00
5'x5' CONC. PAD
FOR BUILDING DETAILS SEE SHEET NO. AM2
6' CONC. SIDEWALK
STA. 1+16
5:1 SLOPE
SWALE
DRAINAGE
65' STATE HIGHWAY DRAINAGE R.O.W.
1-2"x1½" REDUCER
1-1½" YARD HYDRANT COMPLETE
EXISTING CONTOUR ELEVATION (TYP.)
PROPOSED CONTOUR ELEVATION (TYP.)
W.W.T.P. HEADWORKS (BY OTHERS)
1-48" 45° BEND
2-48" 45° BENDS
48" D.I.P.
4" D.I.P. NPW
PROP. 48" D.I.P.
42" D.I.P. R.S. (BY OTHERS)
24" D.I.P. P.D.
6" D.I.P.
"D" STREET
FUTURE 72" SEWER TUNNEL (BY OTHERS)
"C" STREET (PAVING BY OTHERS)
24" D.I.P.
12" D.I.P.
T.C. 70.50 E.P. 70.00
NOTES
1. P.D. INDICATES PLANT DRAINAGE
2. N.P.W. INDICATES NON POTABLE WATER LINES
3. E INDICATES ELECTRICAL CONDUIT
4. PROPOSED PAVING
BENCHMARK
CITY OF HOUSTON MONUMENT NO. 9853/1311 USC & GS DATUM-1973 ADJ. - EL. 71.14
JOB NO. 4056-1
PRC Engineering, Inc.
9800 Richmond Avenue Suite 600
Houston, Texas 77042
INFLUENT PUMP STATION
KEEGANS BAYOU
WASTEWATER TREATMENT PLANT
SITE PLAN
JOB NO. 3840-000-00
APPROVED BY: P.H. BRAUN
DATE: 1-14-87
SHEET C-2
CITY OF HOUSTON
DEPARTMENT OF PUBLIC WORKS
APPROVALS
WATER DESIGN
PAVING DEPT
WATER QUALITY
STORM SEWERS
ASSISTANT DIRECTOR-WATER DIV.
SANITARY SEWERS
OTHER DEPT'S.
TRAFFIC & TRANSPORTATION DEPT.
CITY PLANNING DEPT.
ASST. DIRECTOR OF PUBLIC WORKS
DIRECTOR OF PUBLIC WORKS
SUBMITTED:
SCALE: 1" = 10'
DATE: 12-1-86
SURV. BY:
F.B. NO.:
DESIGNED BY: P.B., A.G.
DRAWN BY: N.V.
SHEET NO. 3 OF 25 SHEETS
DWG. NO. 28650
4-22-88 AS-BUILT
PROJECT RECORD

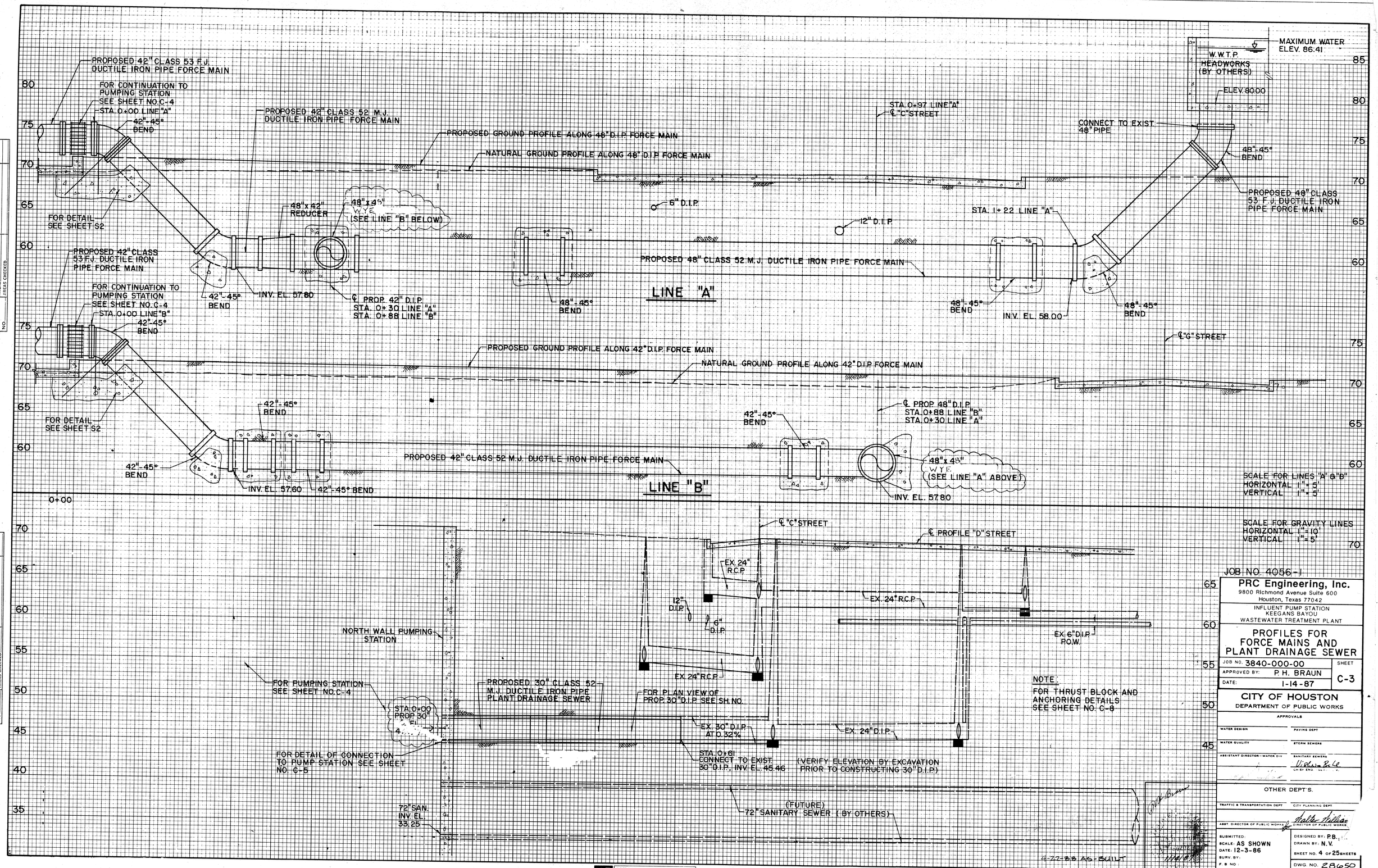

KEUFFEL & ESSER A KARTOS Company 48 7072 Made in U.S.A.

PLATE 3, CROSS SECTION

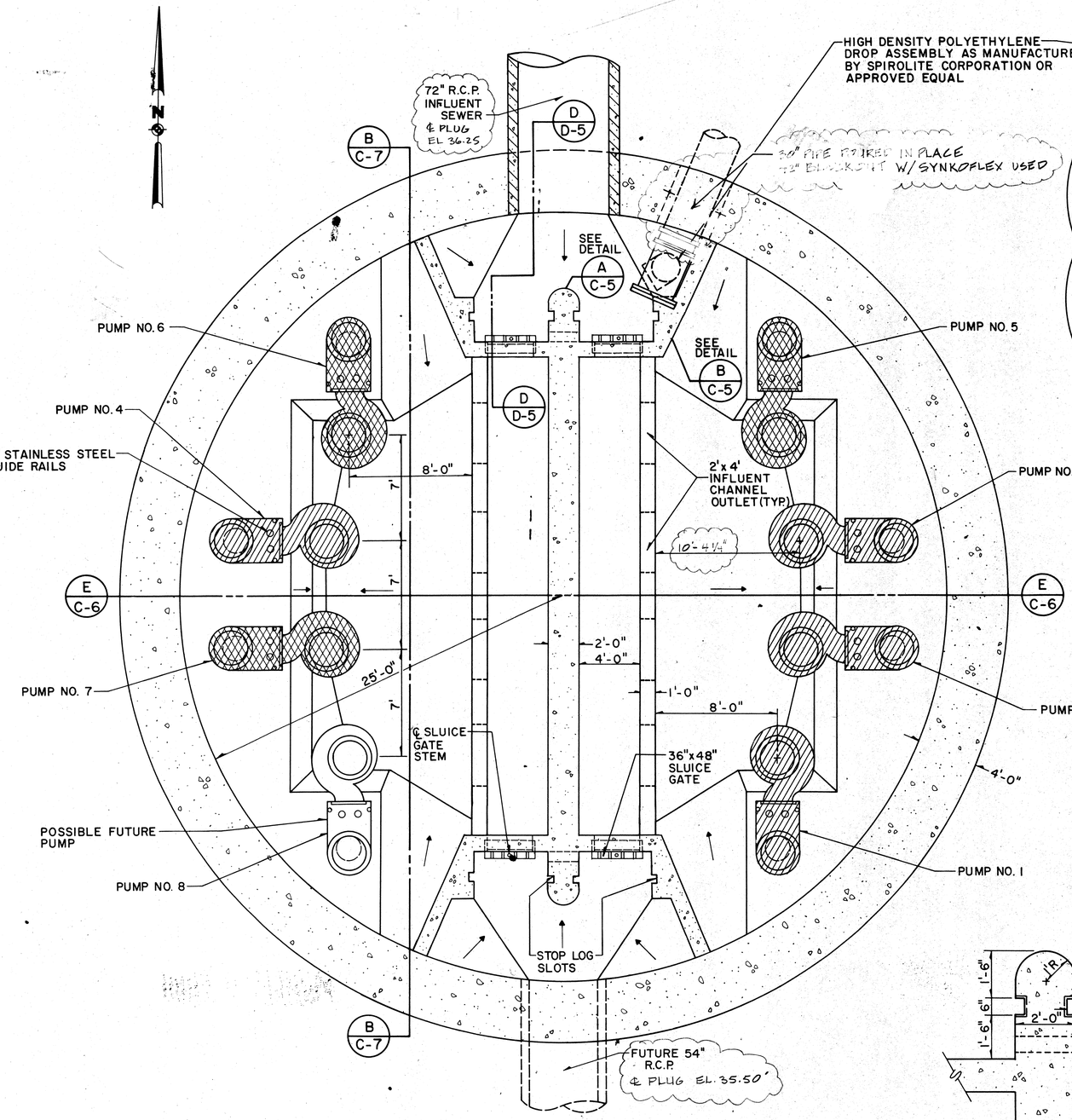

PLAN VIEW ELEV. 36.25

SECTION C C-6
SCALE 1/4"=1'-0"

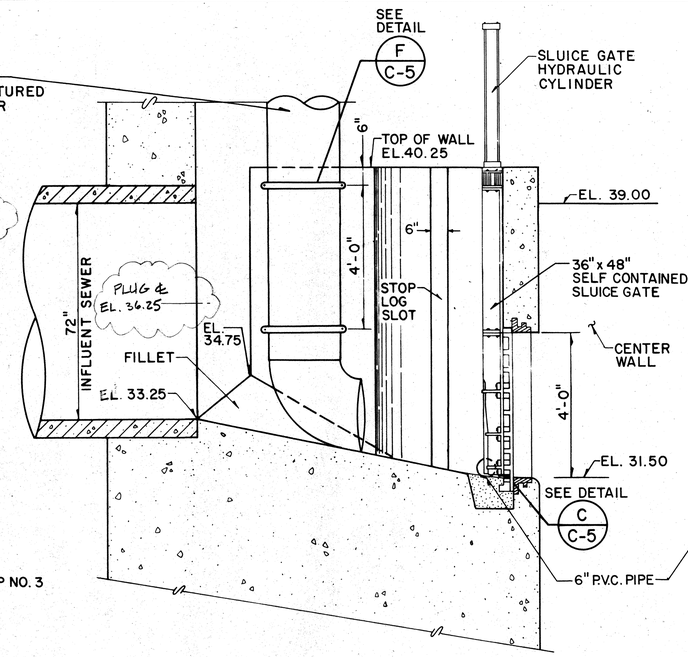

SECTION D C-5
SCALE 1/2"=1'-0"

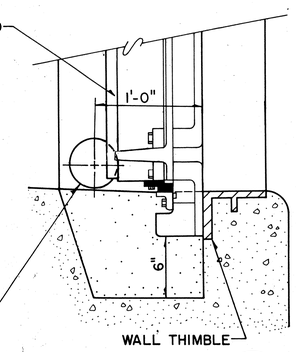

DETAIL C C-5
SCALE 1 1/2"= 1'-0"

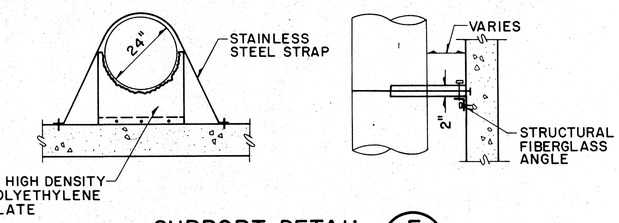

SUPPORT DETAIL F C-5
NOT TO SCALE

PUMPS TO BE INSTALLED IN THIS CONTRACT

FUTURE PUMPS

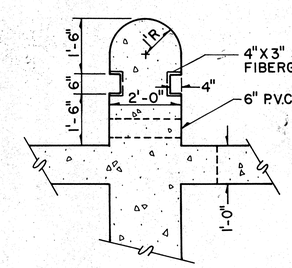

DETAIL A C-5
SCALE 1/2"=1'-0"

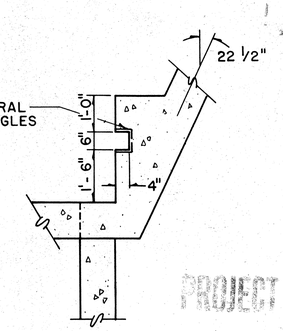

DETAIL B C-5
SCALE 1/2"=1'-0"

PROJECT RECORD

4-22-88 AS-BUILT

JOB NO. 4056-1

PRC Engineering, Inc.
9800 Richmond Avenue Suite 600
Houston, Texas 77042

INFLUENT PUMP STATION
KEEGANS BAYOU
WASTEWATER TREATMENT PLANT

PUMP STATION PLAN VIEW AT ELEV. 36 AND DETAILS

JOB NO. 3840-000-00	SHEET
APPROVED BY: P. H. BRAUN	C-5
DATE: 1-14-87	

CITY OF HOUSTON
DEPARTMENT OF PUBLIC WORKS

APPROVALS

WATER DESIGN	PAVING DEPT
WATER QUALITY	STORM SEWERS
ASSISTANT DIRECTOR—WATER DIV	SANITARY SEWERS
	CHIEF ENG.—SEWER DIV.

OTHER DEPT'S.

TRAFFIC & TRANSPORTATION DEPT.	CITY PLANNING DEPT.
ASST. DIRECTOR OF PUBLIC WORKS	DIRECTOR OF PUBLIC WORKS

SUBMITTED:	DESIGNED BY: P.B., A.G.
SCALE: AS SHOWN	DRAWN BY: D.S.
DATE: 12-1-86	SHEET NO. 6 OF 25 SHEETS
SURV. BY:	
F. B. NO.:	DWG. NO. 28650

1/14/87

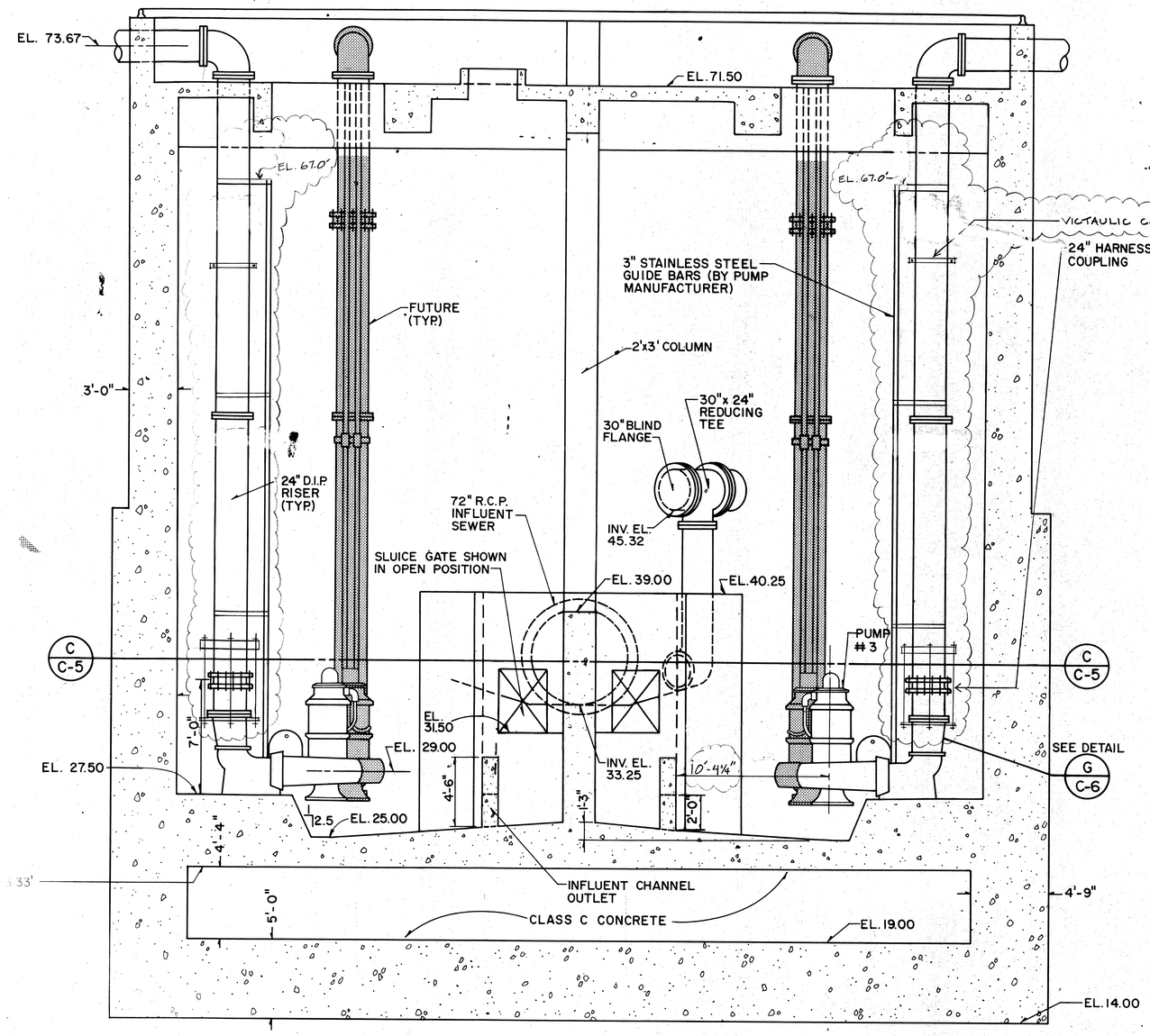

SECTION

SCALE 1/4" = 1'-0"

E C-4 / E C-5

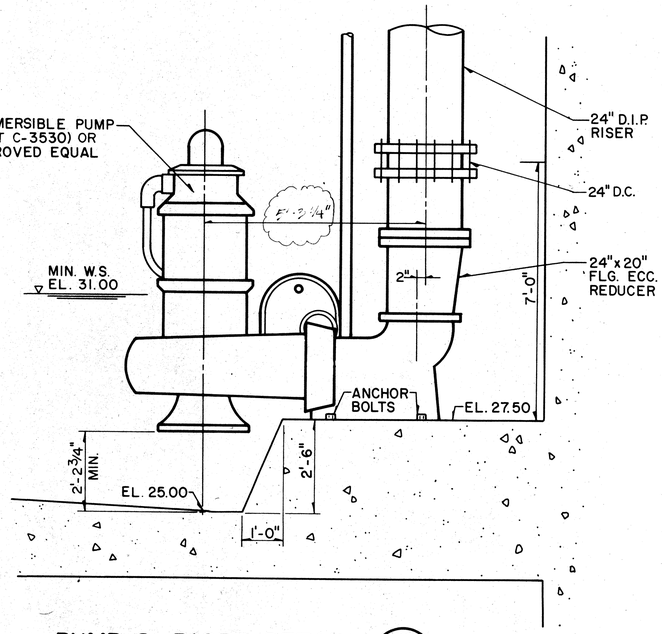

PUMP & RISER DETAIL

SCALE 1/2" = 1'-0"

G C-6

WET WELL LEVEL CONTROL POINTS		
ON/OFF	ELEVATION	REMARKS
LAG PUMP #6 ON	37.00	
LAG PUMP #5 ON LAG PUMP #6 OFF	36.25	
LAG PUMP #4 ON LAG PUMP #5 OFF	35.50	
LAG PUMP #3 ON LAG PUMP #4 OFF	34.75	
LAG PUMP #2 ON LAG PUMP #3 OFF	34.00	
LAG PUMP #1 ON LAG PUMP #2 OFF	33.25	
LEAD PUMP ON LAG PUMP #1 OFF	32.50	
LEAD PUMP OFF	31.00	

PROJECT RECORD

4-22-88 AS-BUILT

JOB NO. 4056-1

PRC Engineering, Inc.
9800 Richmond Avenue Suite 600
Houston, Texas 77042

INFLUENT PUMP STATION
KEEGANS BAYOU
WASTEWATER TREATMENT PLANT

PUMP STATION SECTION AND DETAILS

JOB NO. 3840-000-00 | SHEET C-6
APPROVED BY: P.H. BRAUN
DATE: 1-14-87

CITY OF HOUSTON
DEPARTMENT OF PUBLIC WORKS

APPROVALS

WATER DESIGN	PAVING DEPT
WATER QUALITY	STORM SEWERS
ASSISTANT DIRECTOR—WATER DIV.	SANITARY SEWERS Virgilio Bolo CHIEF ENG.—SEWER DIV.

OTHER DEPT'S.

TRAFFIC & TRANSPORTATION DEPT.	CITY PLANNING DEPT.
ASST. DIRECTOR OF PUBLIC WORKS	for DIRECTOR OF PUBLIC WORKS

SUBMITTED:
SCALE: 1/4" = 1'-0"
DATE: 12-19-86
SURV. BY:
F.B. NO.:

DESIGNED BY: P.B., A.G.
DRAWN BY: D.S.
SHEET NO. 7 OF 25 SHEETS
DWG. NO. 28650

P. H. BRAUN
6202
1/14/87

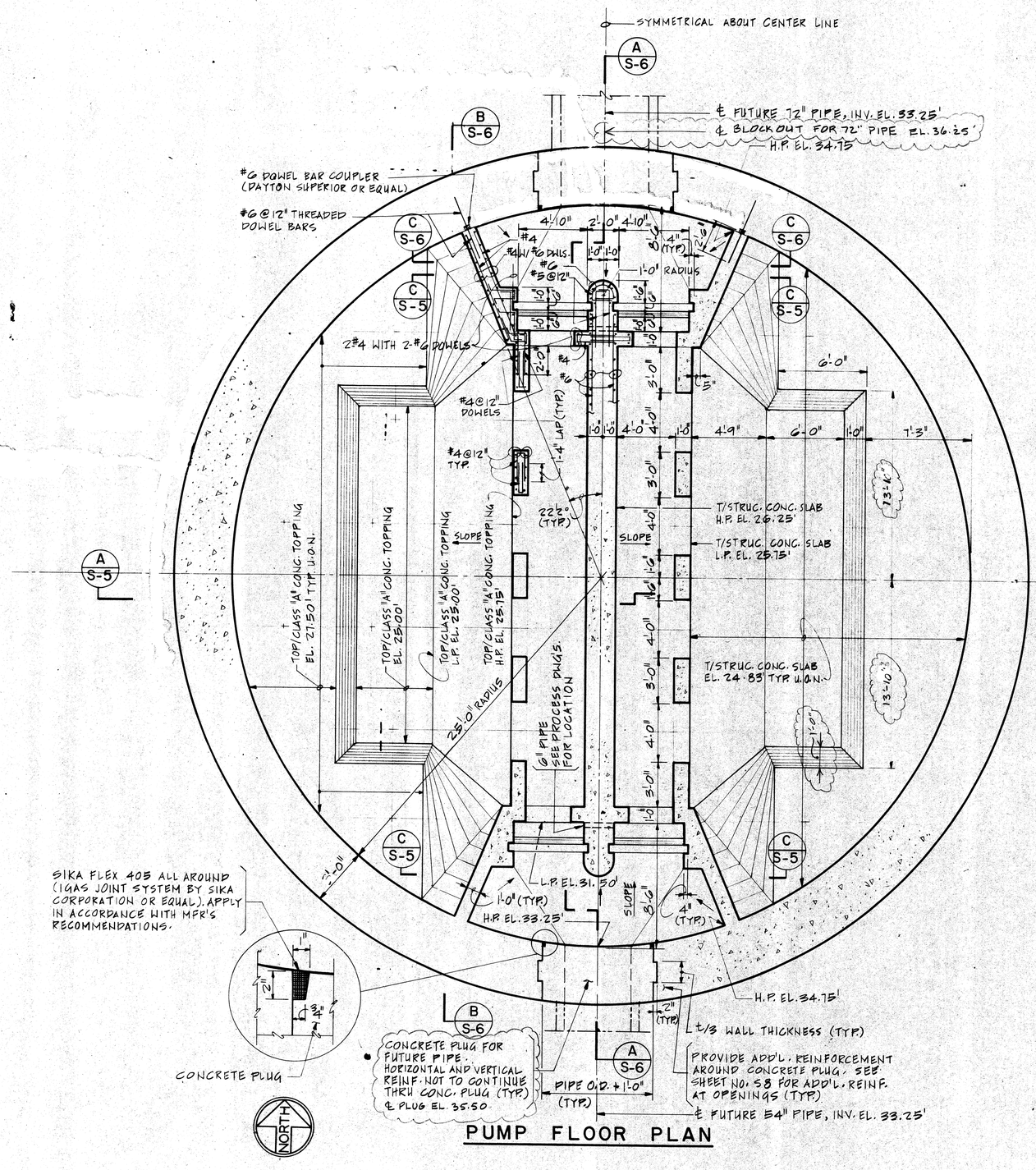

PUMP FLOOR PLAN

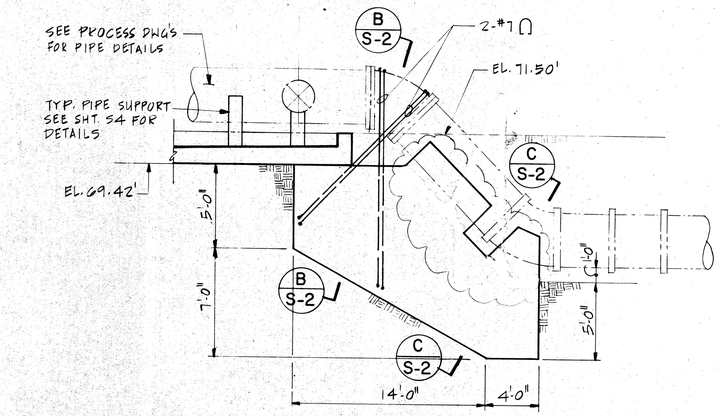

SECTION A S-2

1" = 5'-0"

NOTE!
AT CONTRACTOR'S OPTION, BARS MAY BE LAPPED 1'-0" AND WELDED IF WELDABLE GRADE 60 BARS ARE USED.

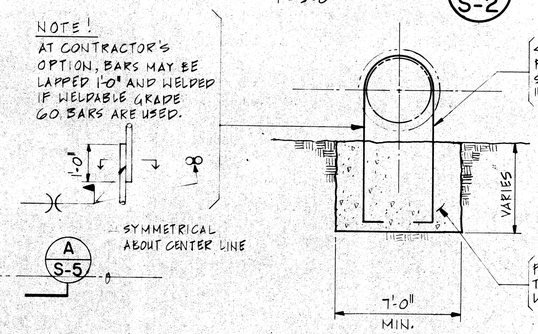

SECTION B S-2

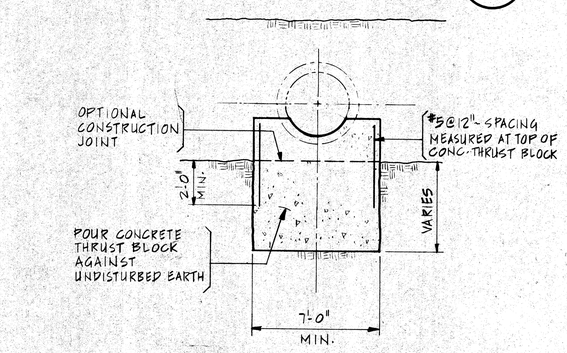

SECTION C S-2

PROJECT RECORD

NOTE:
FOR LOCATION AND SIZE OF CONCRETE CURBS, CONCRETE EQUIPMENT PADS AND OPENINGS IN WALLS AND SLABS NOT SHOWN ON THIS DRAWING, SEE PROCESS, ARCHITECTURAL, MECHANICAL AND ELECTRICAL DRAWINGS. FOR REINFORCING DETAILS AND ADDITIONAL REINFORCING STEEL, SEE SHEET S-8.

4-22-88 AS-BUILT

JOB NO. 4056-1 11/16/87

PRC Engineering, Inc.
9800 Richmond Avenue Suite 600
Houston, Texas 77042

INFLUENT PUMP STATION
KEEGANS BAYOU
WASTEWATER TREATMENT PLANT

PUMP FLOOR PLAN

JOB NO. 3840-000-00	SHEET
APPROVED BY: P.H. BRAUN	S-2
DATE: 12-19-86	

CITY OF HOUSTON
DEPARTMENT OF PUBLIC WORKS

APPROVALS

WATER DESIGN	PAVING DEPT
WATER QUALITY	STORM SEWERS
ASSISTANT DIRECTOR - WATER DIV.	SANITARY SEWERS CHIEF ENG. - SEWER DIV.

OTHER DEPT'S.

TRAFFIC & TRANSPORTATION DEPT.	CITY PLANNING DEPT.
ASST. DIRECTOR OF PUBLIC WORKS	DIRECTOR OF PUBLIC WORKS

SUBMITTED:	DESIGNED BY: AAG, MJP
SCALE: 1/4" = 1'-0" U.O.N.	DRAWN BY: LTS
DATE:	SHEET NO. 19 OF 25 SHEETS
SURV. BY:	
F. B. NO.:	DWG. NO. 28650

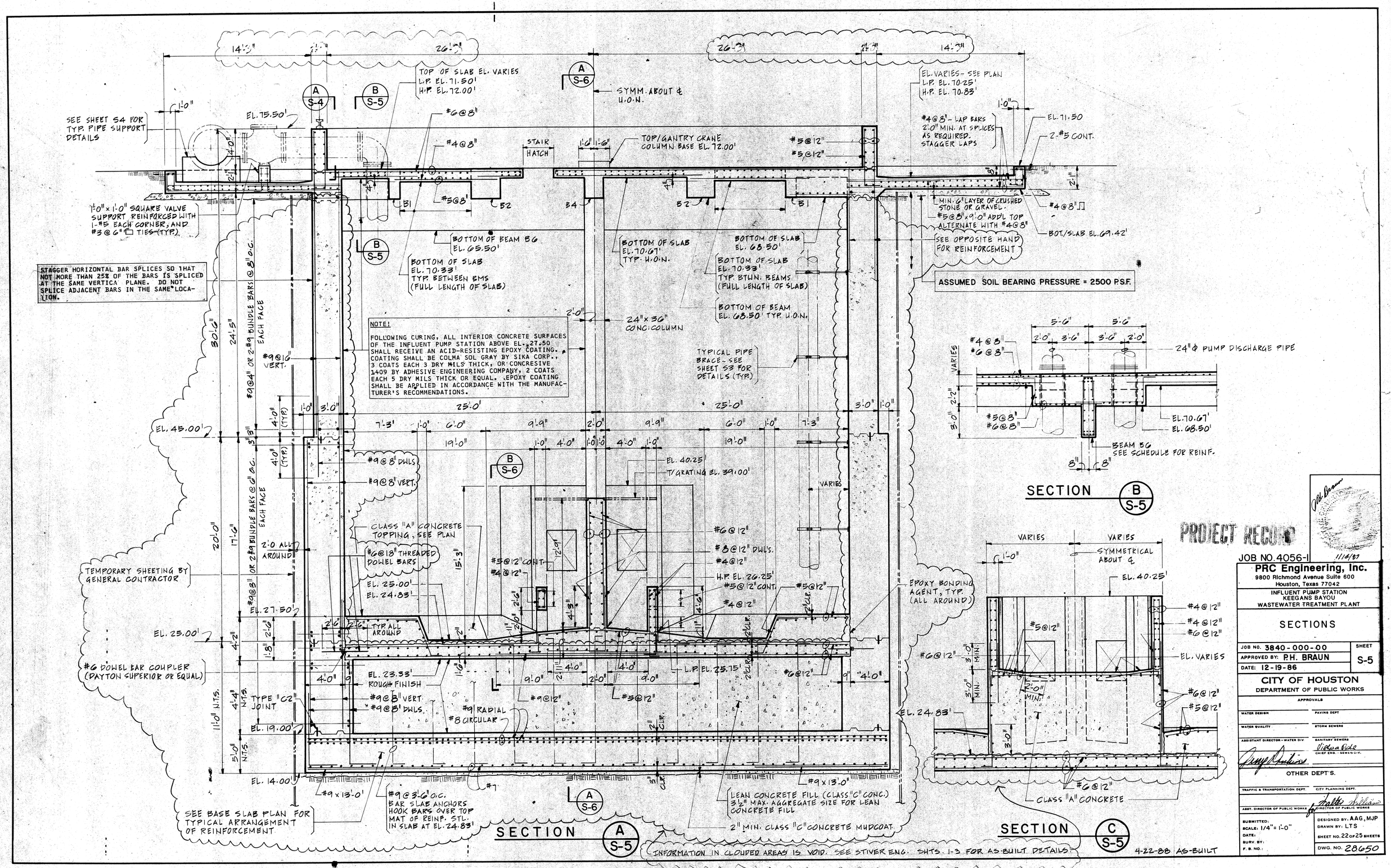
SEE SHEET S4 FOR TYP. PIPE SUPPORT DETAILS
TOP OF SLAB EL. VARIES L.P. EL. 71.50' H.P. EL. 72.00'
SYMM. ABOUT ℄ U.O.N.
EL. VARIES - SEE PLAN L.P. EL. 70.25' H.P. EL. 70.83'
#4@8" - LAP BARS 2'-0" MIN. AT SPLICES AS REQUIRED. STAGGER LAPS
EL. 71.50
2-#5 CONT.
TOP/GANTRY CRANE COLUMN BASE EL. 72.00'
STAIR HATCH
1'-0"x1'-0" SQUARE VALVE SUPPORT REINFORCED WITH 1-#5 EACH CORNER, AND #3@6" TIES (TYP.)
MIN. 6" LAYER OF CRUSHED STONE OR GRAVEL.
#5@8"x9'-0" ADDL TOP ALTERNATE WITH #4@8"
BOT./SLAB EL. 69.42'
SEE OPPOSITE HAND FOR REINFORCEMENT
BOTTOM OF BEAM B6 EL. 65.50'
BOTTOM OF SLAB EL. 70.33' TYP. BETWEEN BMS (FULL LENGTH OF SLAB)
BOTTOM OF SLAB EL. 70.67' TYP. U.O.N.
BOTTOM OF SLAB EL. 68.50'
BOTTOM OF SLAB EL. 70.33' TYP. BTWN. BEAMS (FULL LENGTH OF SLAB)
BOTTOM OF BEAM EL. 68.50' TYP. U.O.N.
ASSUMED SOIL BEARING PRESSURE = 2500 P.S.F.
STAGGER HORIZONTAL BAR SPLICES SO THAT NOT MORE THAN 25% OF THE BARS IS SPLICED AT THE SAME VERTICAL PLANE. DO NOT SPLICE ADJACENT BARS IN THE SAME LOCATION.
NOTE!
FOLLOWING CURING, ALL INTERIOR CONCRETE SURFACES OF THE INFLUENT PUMP STATION ABOVE EL. 27.50 SHALL RECEIVE AN ACID-RESISTING EPOXY COATING. COATING SHALL BE COLMA SOL GRAY BY SIKA CORP., 3 COATS EACH 3 DRY MILS THICK, OR CONCRESIVE 1409 BY ADHESIVE ENGINEERING COMPANY, 2 COATS EACH 5 DRY MILS THICK OR EQUAL. EPOXY COATING SHALL BE APPLIED IN ACCORDANCE WITH THE MANUFACTURER'S RECOMMENDATIONS.
24"x36" CONC. COLUMN
TYPICAL PIPE BRACE - SEE SHEET S3 FOR DETAILS (TYP.)
#9@10" VERT.
#9@4" OR 2-#9 BUNDLE BARS @ 8" O.C. EACH FACE
#9@8" OR 2-#9 BUNDLE BARS @ 8" O.C. EACH FACE
EL. 45.00'
#9@8" DWLS
#9@8" VERT.
CLASS "A" CONCRETE TOPPING, SEE PLAN
#6@18" THREADED DOWEL BARS
2'-0" ALL AROUND
TEMPORARY SHEETING BY GENERAL CONTRACTOR
EL. 25.00'
EL. 24.83'
EL. 27.50'
TYP. ALL AROUND
#6 DOWEL BAR COUPLER (DAYTON SUPERIOR OR EQUAL)
EL. 23.33' ROUGH FINISH
#9@8" VERT.
#9@8" DWLS.
TYPE "C2" JOINT
EL. 19.00'
EL. 14.00'
#9x13'-0'
#9@3'-6" O.C. BAR SLAB ANCHORS HOOK BARS OVER TOP MAT OF REINF. STL. IN SLAB AT EL. 24.83'
SEE BASE SLAB PLAN FOR TYPICAL ARRANGEMENT OF REINFORCEMENT
EL. 40.25'
T/GRATING EL. 39.00'
#6@12"
#8@12" DWL'S.
#4@12"
H.P. EL. 26.25'
#5@12" CONT.
#5@12"
#4@12"
#5@12" CONT.
#4@12"
#9 RADIAL
#8 CIRCULAR
L.P. EL. 25.75'
#6@12"
#5@12"
LEAN CONCRETE FILL (CLASS "C" CONC.) 3½" MAX. AGGREGATE SIZE FOR LEAN CONCRETE FILL
2" MIN. CLASS "C" CONCRETE MUDCOAT
SECTION A S-5
SECTION B S-5
SECTION C S-5
24" Φ PUMP DISCHARGE PIPE
EL. 70.67'
EL. 68.50'
BEAM B6 SEE SCHEDULE FOR REINF.
EPOXY BONDING AGENT, TYP. (ALL AROUND)
SYMMETRICAL ABOUT ℄
EL. VARIES
CLASS "A" CONCRETE
INFORMATION IN CLOUDED AREAS IS VOID. SEE STIVER ENG. SHTS. 1-3 FOR AS-BUILT DETAILS.
4-22-88 AS-BUILT
PROJECT RECORD
JOB NO. 4056-1
7/14/87
PRC Engineering, Inc.
9800 Richmond Avenue Suite 600
Houston, Texas 77042
INFLUENT PUMP STATION
KEEGANS BAYOU
WASTEWATER TREATMENT PLANT
SECTIONS
JOB NO. 3840-000-00
APPROVED BY: P.H. BRAUN
DATE: 12-19-86
SHEET S-5
CITY OF HOUSTON
DEPARTMENT OF PUBLIC WORKS
APPROVALS
WATER DESIGN
PAVING DEPT
WATER QUALITY
STORM SEWERS
ASSISTANT DIRECTOR - WATER DIV.
SANITARY SEWERS
CHIEF ENG. - SEWER DIV.
OTHER DEPT'S.
TRAFFIC & TRANSPORTATION DEPT.
CITY PLANNING DEPT.
ASST. DIRECTOR OF PUBLIC WORKS
DIRECTOR OF PUBLIC WORKS
SUBMITTED:
SCALE: 1/4" = 1'-0"
DATE:
SURV. BY:
F. B. NO.:
DESIGNED BY: AAG, MJP
DRAWN BY: LTS
SHEET NO. 22 OF 25 SHEETS
DWG. NO. 28650

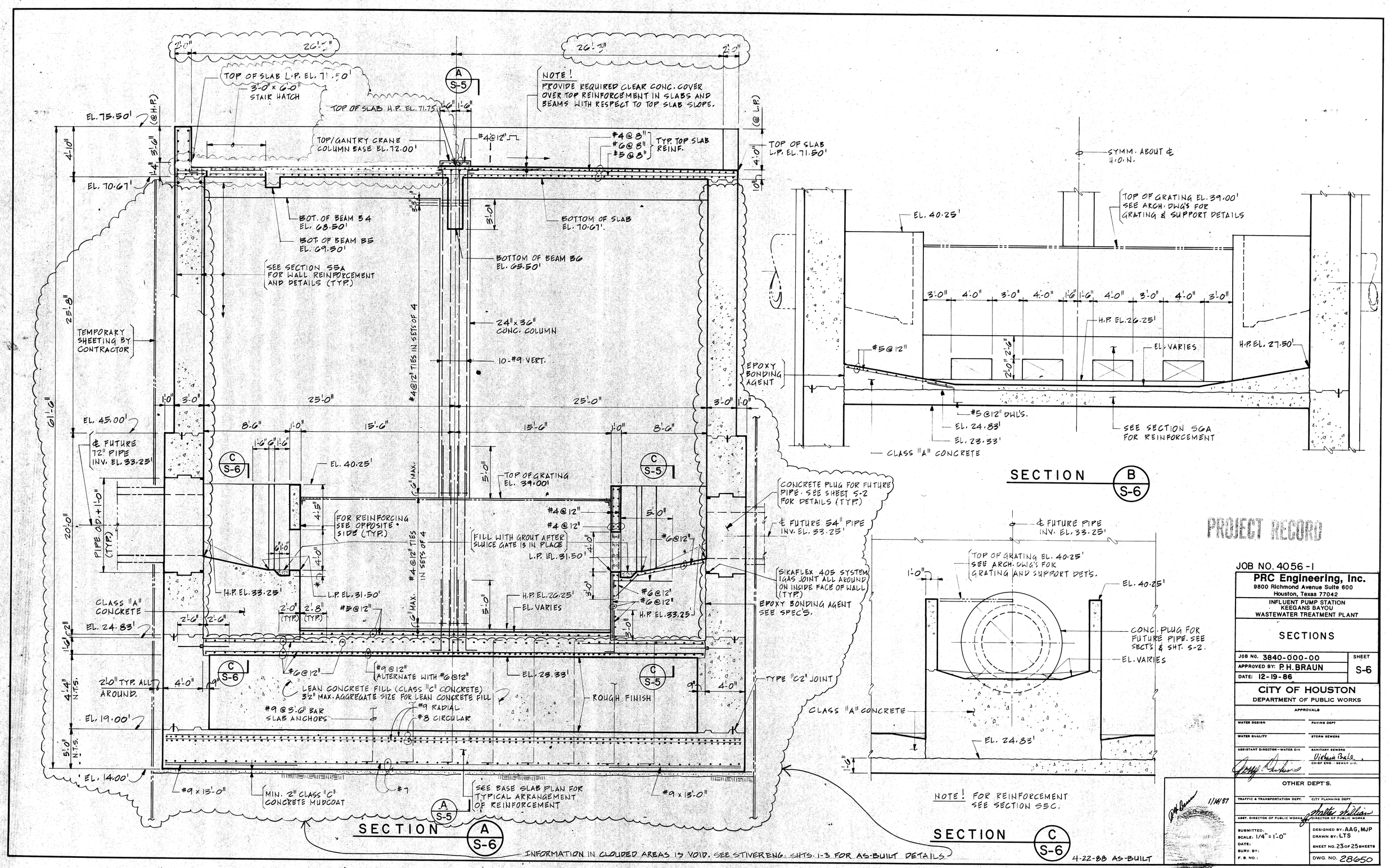
TOP OF SLAB L.P. EL. 71.50'
3'-0" x 6'-0" STAIR HATCH
TOP OF SLAB H.P. EL. 71.75
NOTE! PROVIDE REQUIRED CLEAR CONC. COVER OVER TOP REINFORCEMENT IN SLABS AND BEAMS WITH RESPECT TO TOP SLAB SLOPE.
TOP/GANTRY CRANE COLUMN BASE EL. 72.00'
#4@12"
#4@8" #6@8" #5@8" TYP. TOP SLAB REINF.
TOP OF SLAB L.P. EL. 71.50'
EL. 75.50' (@ H.P.)
EL. 70.67'
BOT. OF BEAM B4 EL. 68.50'
BOT. OF BEAM B5 EL. 69.50'
BOTTOM OF SLAB EL. 70.67'.
BOTTOM OF BEAM B6 EL. 65.50'
SEE SECTION S5A FOR WALL REINFORCEMENT AND DETAILS (TYP.)
TEMPORARY SHEETING BY CONTRACTOR
24"x36" CONC. COLUMN
10-#9 VERT.
#4@12" TIES IN SETS OF 4
EL. 45.00'
℄ FUTURE 72" PIPE INV. EL. 33.25'
EL. 40.25'
TOP OF GRATING EL. 39.00'
FOR REINFORCING SEE OPPOSITE SIDE (TYP.)
PIPE O.D. + 1'-0" (TYP.)
FILL WITH GROUT AFTER SLUICE GATE IS IN PLACE
L.P. EL. 31.50'
H.P. EL. 33.25'
H.P. EL. 26.25'
EL. VARIES
CLASS "A" CONCRETE
EL. 24.83'
#5@12"
#6@12"
#9@12" ALTERNATE WITH #6@12"
LEAN CONCRETE FILL (CLASS "C" CONCRETE) 3½" MAX. AGGREGATE SIZE FOR LEAN CONCRETE FILL
#9 @ 5'-0" BAR SLAB ANCHORS
#9 RADIAL
#8 CIRCULAR
EL. 23.33'
ROUGH FINISH
2'-0" TYP. ALL AROUND.
EL. 19.00'
EL. 14.00'
#9 x 13'-0"
MIN. 2" CLASS "C" CONCRETE MUDCOAT
#7
SEE BASE SLAB PLAN FOR TYPICAL ARRANGEMENT OF REINFORCEMENT
CONCRETE PLUG FOR FUTURE PIPE. SEE SHEET S-2 FOR DETAILS (TYP.)
℄ FUTURE 54" PIPE INV. EL. 33.25'
SIKAFLEX 405 SYSTEM (GAS JOINT ALL AROUND ON INSIDE FACE OF WALL (TYP.)
EPOXY BONDING AGENT SEE SPEC'S.
TYPE "C2" JOINT
SECTION A S-6
SYMM. ABOUT ℄ H.O.N.
TOP OF GRATING EL. 39.00' SEE ARCH. DWG'S FOR GRATING & SUPPORT DETAILS
EL. 40.25'
H.P. EL. 26.25'
EL. VARIES
H.P. EL. 27.50'
EPOXY BONDING AGENT
#5@12" DWL'S.
EL. 24.83'
EL. 23.33'
SEE SECTION S6A FOR REINFORCEMENT
CLASS "A" CONCRETE
SECTION B S-6
℄ FUTURE PIPE INV. EL. 33.25'
TOP OF GRATING EL. 40.25' SEE ARCH. DWG'S FOR GRATING AND SUPPORT DET'S.
EL. 40.25'
CONC. PLUG FOR FUTURE PIPE. SEE SECT'S & SHT. S-2.
EL. VARIES
CLASS "A" CONCRETE
EL. 24.83'
NOTE! FOR REINFORCEMENT SEE SECTION S5C.
SECTION C S-6
INFORMATION IN CLOUDED AREAS IS VOID. SEE STIVER ENG. SHTS. 1-3 FOR AS-BUILT DETAILS
4-22-88 AS-BUILT
PROJECT RECORD
JOB NO. 4056-1
PRC Engineering, Inc.
9800 Richmond Avenue Suite 600
Houston, Texas 77042
INFLUENT PUMP STATION
KEEGANS BAYOU
WASTEWATER TREATMENT PLANT
SECTIONS
JOB NO. 3840-000-00
APPROVED BY: P.H. BRAUN
DATE: 12-19-86
SHEET S-6
CITY OF HOUSTON
DEPARTMENT OF PUBLIC WORKS
APPROVALS
WATER DESIGN
PAVING DEPT
WATER QUALITY
STORM SEWERS
ASSISTANT DIRECTOR-WATER DIV
SANITARY SEWERS
CHIEF ENG.-SEWER DIV.
OTHER DEPT'S.
TRAFFIC & TRANSPORTATION DEPT.
CITY PLANNING DEPT.
ASST. DIRECTOR OF PUBLIC WORKS
DIRECTOR OF PUBLIC WORKS
SUBMITTED:
SCALE: 1/4" = 1'-0"
DATE:
SURV. BY:
F. B. NO.:
DESIGNED BY: AAG, MJP
DRAWN BY: LTS
SHEET NO. 23 OF 25 SHEETS
DWG. NO. 28650

REV. NO.	DATE	DESCRIPTION	DRAWN	CHECK'D

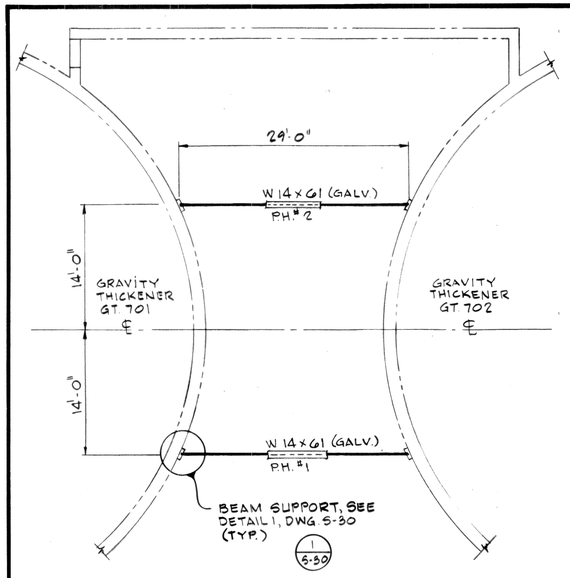

PLAN
P.H. #1 & P.H. #2
SCALE 1/8" = 1'-0"

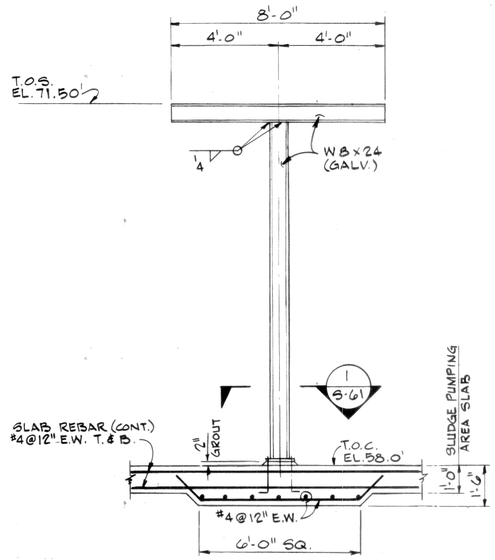

P.S. #1
SCALE 3/8" = 1'-0"

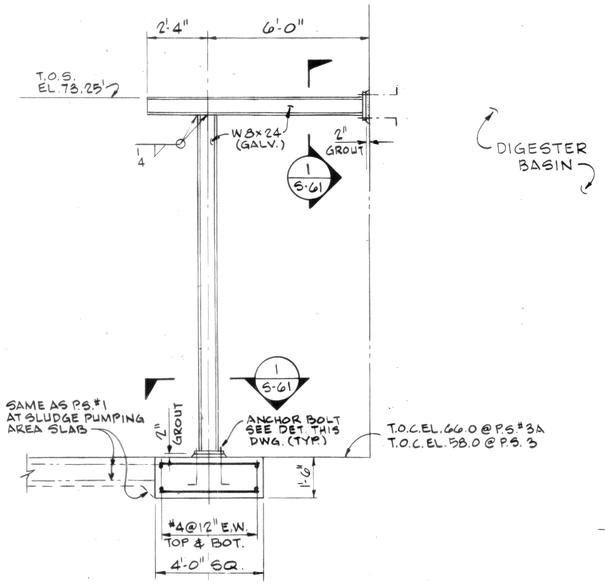

P.S. #3 (AS SHOWN & NOTED)
P.S. #3A (AS SHOWN & NOTED)
SCALE 3/8" = 1'-0"

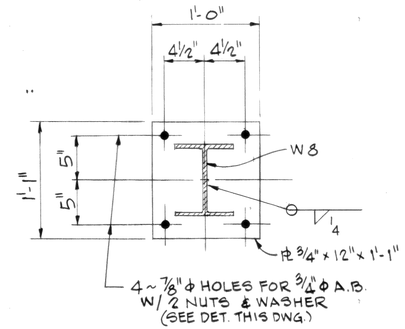

BASE PLATE DETAIL
SCALE 1 1/2" = 1'-0"
1
S-61

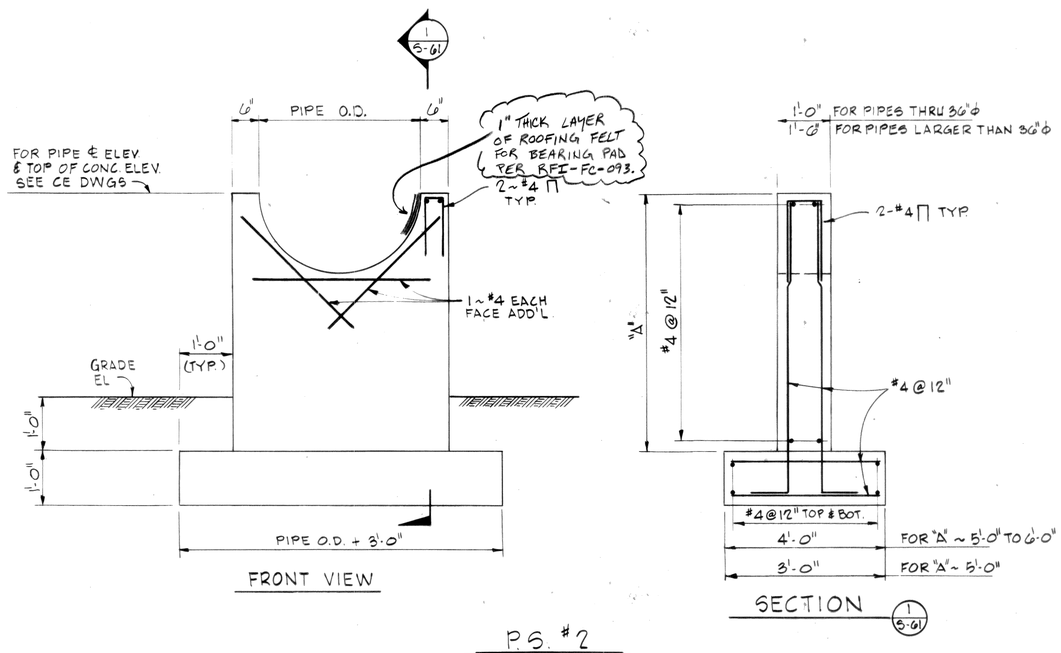

P.S. #2
SCALE 3/4" = 1'-0"

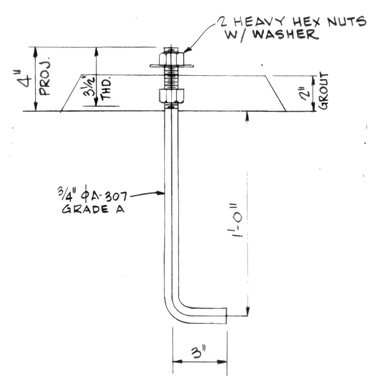

ANCHOR BOLT DETAIL
SCALE 3" = 1'-0"

"As-Built" indications are true and accurate records.
DATE: April 28, 1989
BY: BC
Spaw-Glass Construction Inc.

AS-BUILT

JOB NO. 3885-1

CITY OF HOUSTON
DEPARTMENT OF PUBLIC WORKS

APPROVALS	
WATER DESIGN	PAVING DEPT
WATER QUALITY	STORM SEWERS
ASSISTANT DIRECTOR – WATER DIV.	SANITARY SEWERS
	CHIEF ENG. – SEWER DIV
OTHER DEPT'S.	
TRAFFIC & TRANSPORTATION DEPT.	CITY PLANNING DEPT
ASST. DIRECTOR OF PUBLIC WORKS	DIRECTOR OF PUBLIC WORKS

SUBMITTED:
SCALE:
DATE:
SURV. BY:
F. B. NO.:
DESIGNED BY:
DRAWN BY:
SHEET NO. OF SHEETS
DWG. NO. 28429

STATE OF TEXAS
R. R. FARID
21941
REGISTERED PROFESSIONAL ENGINEER
3-14-86

JOHNSON ENGINEERS ARCHITECTS PLANNERS

KEEGANS BAYOU WASTEWATER TREATMENT PLANT

PIPE SUPPORTS

BERNARD JOHNSON INCORPORATED
ENGINEERS · ARCHITECTS · PLANNERS
5050 WESTHEIMER
HOUSTON TEXAS 77056

Job No. 81084-25	Sheet	
Date: MAR. 25-86	S-61	
Dwn. By: J. HILL	198	
Chkd. By: R. F.	of 284	

REV. NO.	DATE	DESCRIPTION	DRAWN	CHECK'D
1	JUN. 87	ADDED DETAIL 2/E-4 & KEYED NOTES, REVISED HL&P XFMR, PADS & EASEMENT LOCATION	JLC	WS
2	JUL. 87	REVISED DETAIL 6/E4 AND RELOCATED STREETLITE	JLC	WS

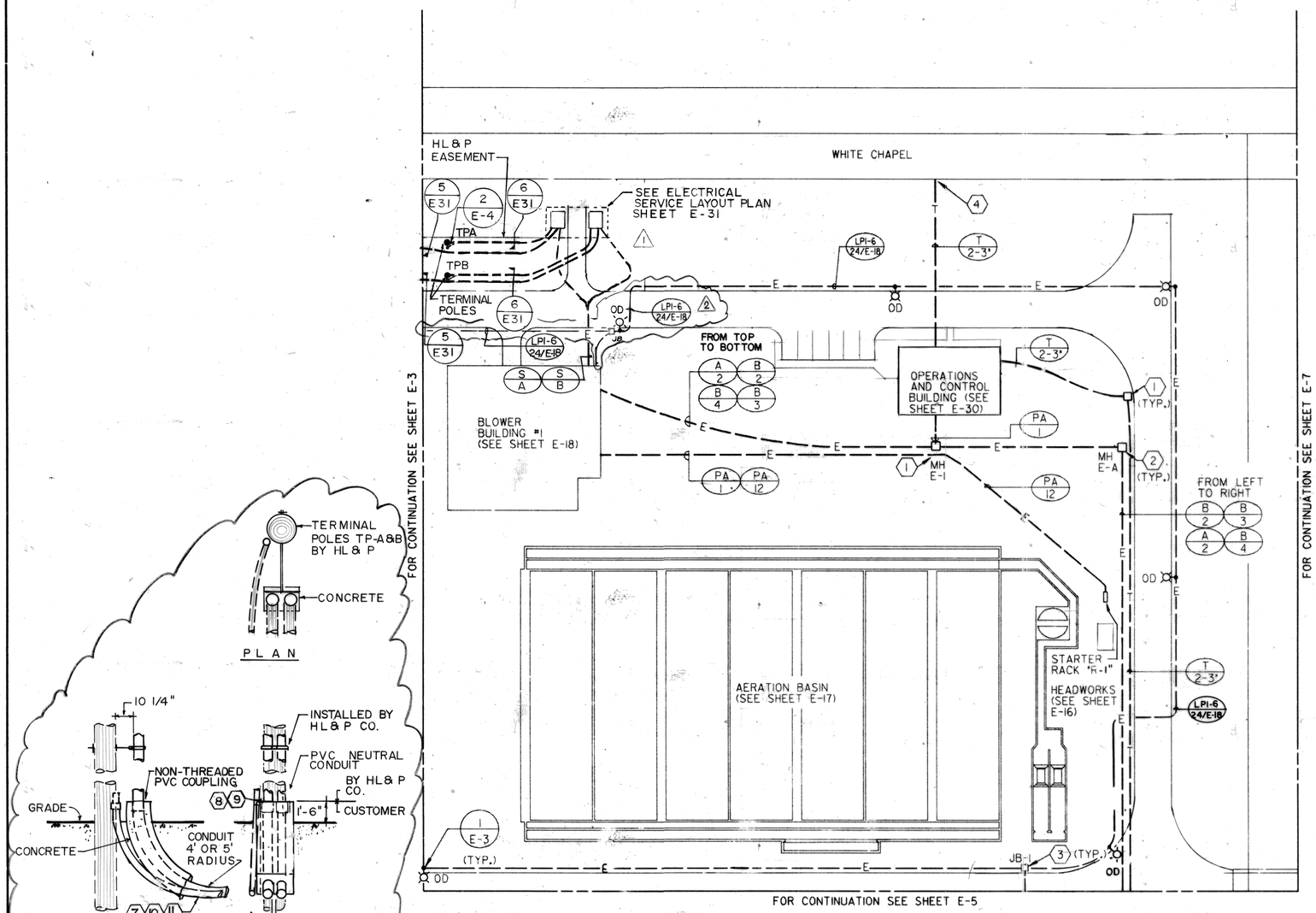

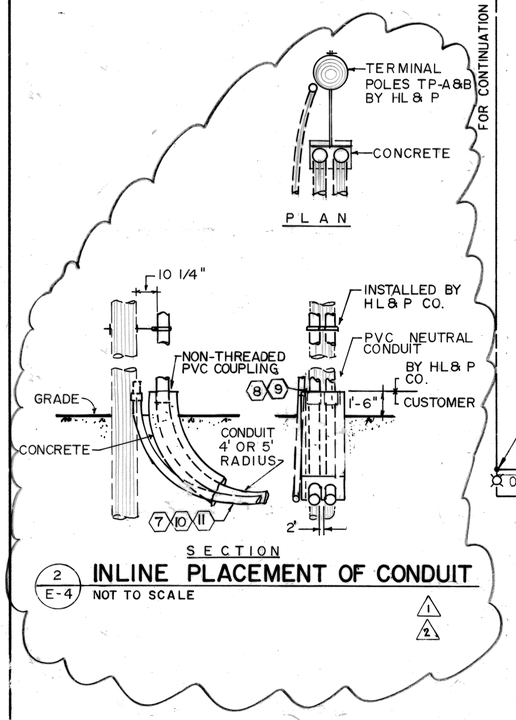

2/E-4 INLINE PLACEMENT OF CONDUIT
NOT TO SCALE

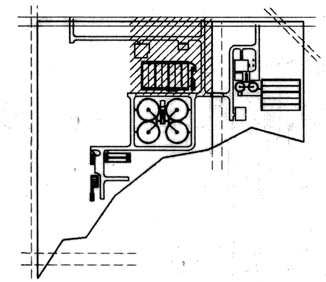

KEY PLAN

KEYED NOTES:

1. TELEPHONE MANHOLE SHALL BE BROOKS 400 SERIES (4'-0"x4'-0"x4'-0") WITH 12 INCHES STACK, FRAME AND COVER, MARKED "TELEPHONE"
2. POWER MANHOLE SHALL BE "DALWORTH 707" (7'-0"x7'-0"x7'-0") CAST IRON RING AND COVER, MARKED "ELECTRICAL"
3. JUNCTION BOX FOR STREET LIGHTING SHALL BE "BROOKS NO. 3½ PULL BOX" WITH WELDED STEEL COVER AND TWO LIFTING EYES, MARKED "STREET LIGHTING"
4. TERMINATE CONDUITS 6" ABOVE GRADE AND CAP
5. NOT USED
6. NOT USED

KEYED NOTES CONTINUATION

7. CONDUIT BENDS SHALL NOT BE INSTALLED UNTIL THE POLE HAS BEEN SET
8. PLUGS OF SUITABLE RIGIDITY SHALL BE USED IN THE PVC COUPLINGS TO INSURE ROUNDNESS OF CPUPLINGS AFTER THE CONCRETE HAS BEEN POURED.
9. THE COUPLINGS BETWEEN THE TERMINAL POLE RISER AND THE CONCRETE ENCASED DUCTLINE SHALL BE PLUGGED AND COVERED WITH A 1/4" LAYER OF CONCRETE. MAKERS SHALL BE INSTALLED THROUGH THE 1/4" LAYER OF CONCRETE INDICATING THE CENTER OF COUPLINGS.
10. PULL WIRE (#14 G.I MINI.) SHALL BE INSTALLED IN ALL CONDUITS.
11. CONDUITS SHALL BE PVC MINIMUM GRADE TYPE EB.

JOB NO. 3885-1

"As-Built" indications are true and accurate records.
DATE: April 28, 1989
BY: Spaw-Glass Construction Inc.

CORRECTED AS-BUILT
DATE: DEC. 29, 1988
BY: BILL HAGERMAN ELECTRIC, INC.
214 Adams/713/923-9371
P.O. Box 9443/Houston, Texas 77261
Commercial/Industrial/Electrical Contractors

CITY OF HOUSTON
DEPARTMENT OF PUBLIC WORKS
APPROVALS
WATER DESIGN | PAVING DEPT
WATER QUALITY | STORM SEWERS
ASS'TANT DIRECTOR—WATER DIV. | SANITARY SEWERS
CHIEF ENG.—SEWER DIV
OTHER DEPT'S.
TRAFFIC & TRANSPORTATION DEPT. | CITY PLANNING DEPT
ASST. DIRECTOR OF PUBLIC WORKS | DIRECTOR OF PUBLIC WORKS
SUBMITTED | DESIGNED BY:
DRAWN BY:
SHEET NO. OF SHEETS
DWG. NO. 28429

0 10 20 100
SCALE: 1:40'-0"

STATE OF TEXAS
WISIT SUWANKOJAI
46282
REGISTERED PROFESSIONAL ENGINEER
3/14/86

JOHNSON ENGINEERS ARCHITECTS PLANNERS

KEEGANS BAYOU WASTEWATER TREATMENT PLANT

SITE PLAN II

BERNARD JOHNSON INCORPORATED
ARCHITECTS ENGINEERS PLANNERS
5050 WESTHEIMER
HOUSTON TEXAS 77056

Job No. 81084-25
Date MARCH 25, 1986
Dwn. By E. REYES
Chk. By J.P.W.

E-4
225 OF 284

REV. NO.	DATE	DESCRIPTION	DRAWN	CHECK'D

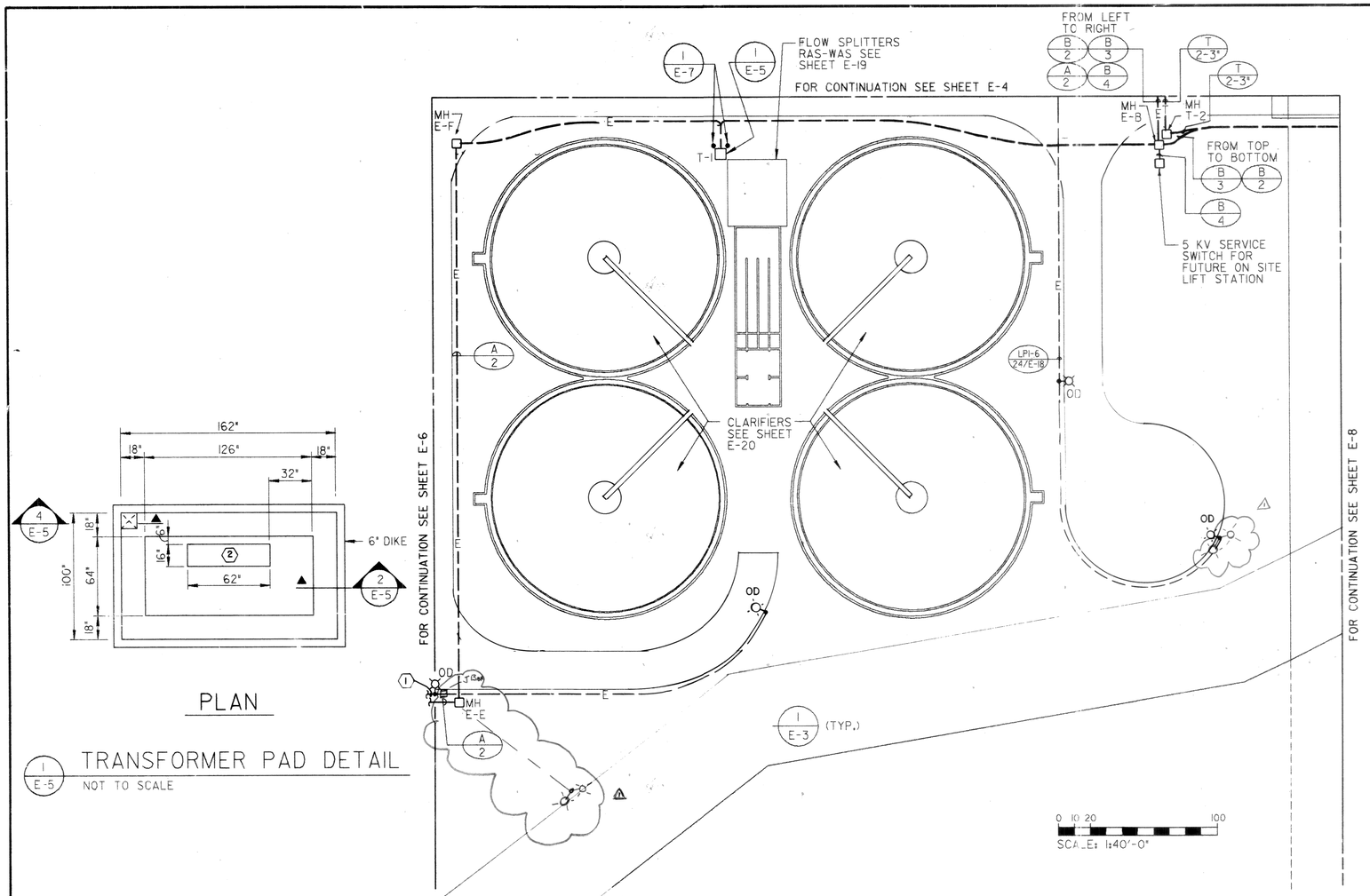

PLAN

TRANSFORMER PAD DETAIL

NOT TO SCALE

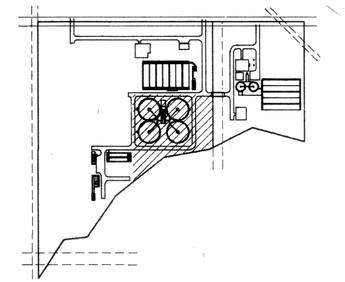

KEY PLAN

KEY NOTES;

1. FOR CONTINUATION SEE CHLORINE CONTACT BASIN ON SHEET E-22
2. AFTER CONDUIT IS INSTALLED FILL OPENING WITH CONCRETE BARRIER, MINIMUM THREE INCHES TO PREVENT ENTRANCE OF RODENTS.
3. ADD LIGHTS 1-92

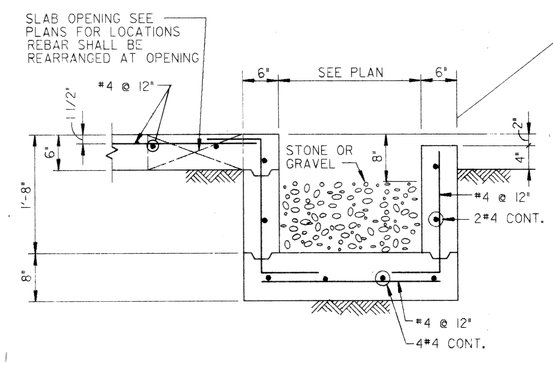

SECTION

NOT TO SCALE

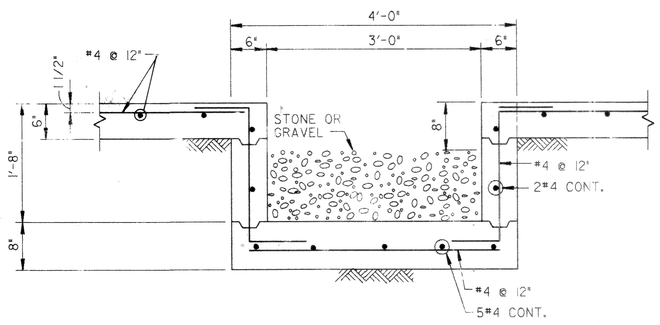

SECTION

NOT TO SCALE

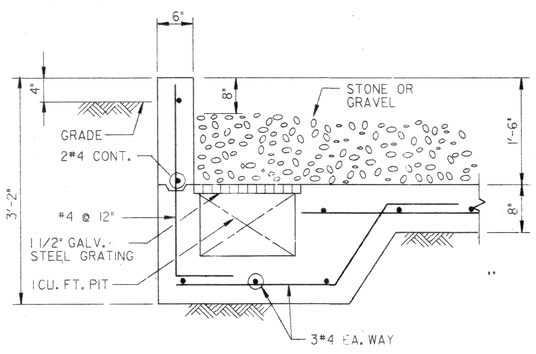

SECTION

NOT TO SCALE

"As-Built" indications are true and accurate records.
DATE: April 28, 1989
BY: BC
Spaw-Glass Construction Inc.

CORRECTED AS-BUILT
DATE: DEC. 29, 1988
BY: BILL HAGERMAN ELECTRIC, INC.
214 Adams/713/923-9371
P.O. Box 9443/Houston, Texas 77261
Commercial/Industrial/Electrical Contractors

JOB NO. 3885-1

CITY OF HOUSTON
DEPARTMENT OF PUBLIC WORKS

APPROVALS

WATER DESIGN	PAVING DEPT
WATER QUALITY	STORM SEWERS
ASSISTANT DIRECTOR - WATER DIV.	SANITARY SEWERS
	CHIEF ENG. - SEWER DIV

OTHER DEPT'S.

TRAFFIC & TRANSPORTATION DEPT.	CITY PLANNING DEPT
ASST. DIRECTOR OF PUBLIC WORKS	DIRECTOR OF PUBLIC WORKS

SUBMITTED:	DESIGNED BY:
SCALE:	DRAWN BY:
DATE:	SHEET NO. OF SHEETS
SURV. NO.	
B. NO.	DWG NO. 28429

STATE OF TEXAS
WISIT SUWANKOSAI
46282
REGISTERED PROFESSIONAL ENGINEER
3/14/86

JOHNSON ENGINEERS ARCHITECTS PLANNERS

KEEGANS BAYOU WASTEWATER TREATMENT PLANT

SITE PLAN III

BERNARD JOHNSON INCORPORATED
ARCHITECTS ENGINEERS PLANNERS
5050 WESTHEIMER
HOUSTON TEXAS 77056

Job No. 81084-25		E-5
Date: MARCH, 25, 1986		226
Dwn. By: J.C / E.R		of 284
Chkd. By: J.E.W		

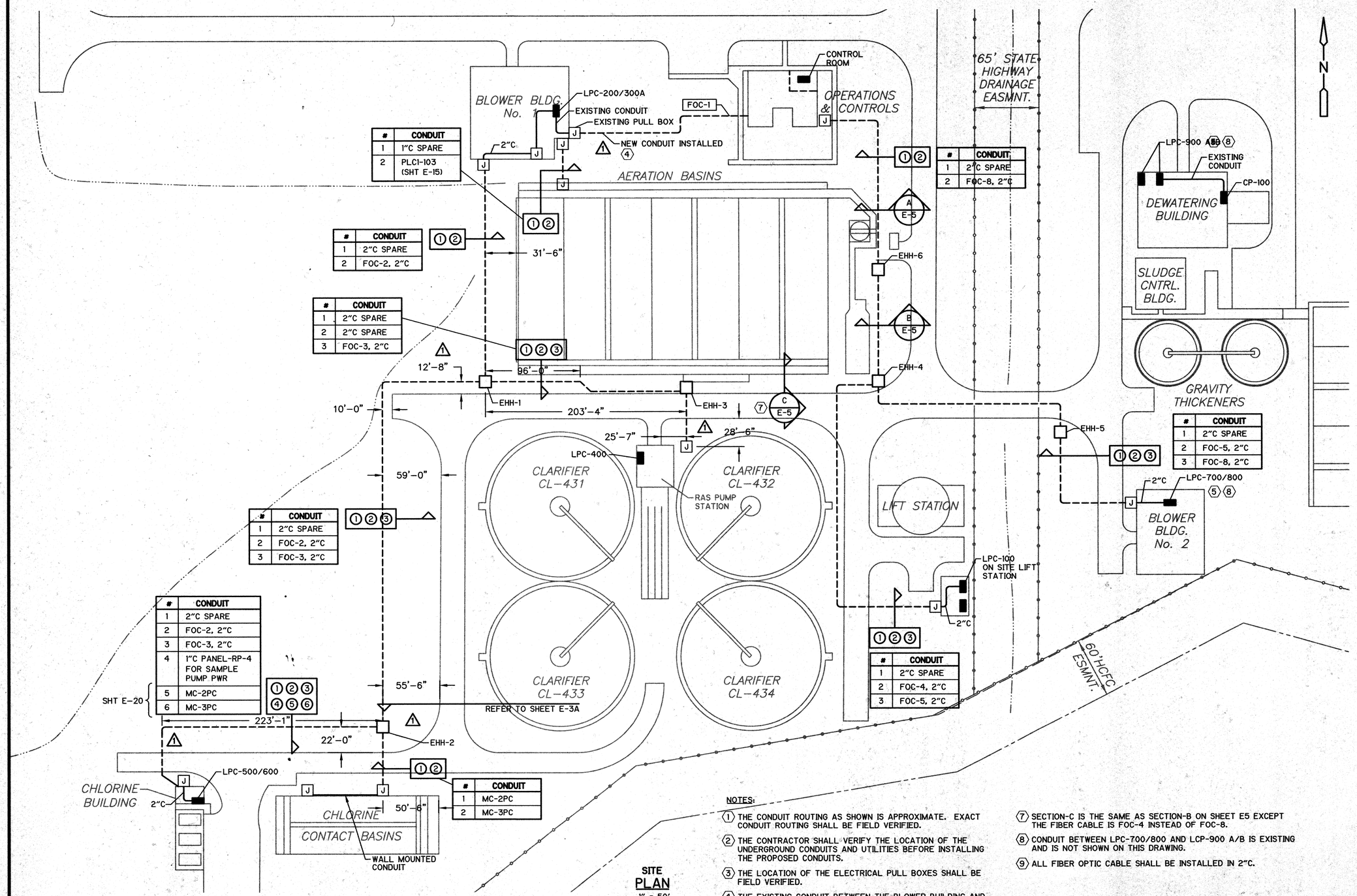

#	CONDUIT
1	1"C SPARE
2	PLC1-103 (SHT E-15)

#	CONDUIT
1	2"C SPARE
2	FOC-2, 2"C

#	CONDUIT
1	2"C SPARE
2	2"C SPARE
3	FOC-3, 2"C

#	CONDUIT
1	2"C SPARE
2	FOC-2, 2"C
3	FOC-3, 2"C

#	CONDUIT
1	2"C SPARE
2	FOC-2, 2"C
3	FOC-3, 2"C
4	1"C PANEL-RP-4 FOR SAMPLE PUMP PWR
5	MC-2PC
6	MC-3PC

#	CONDUIT
1	2"C SPARE
2	FOC-8, 2"C

#	CONDUIT
1	2"C SPARE
2	FOC-5, 2"C
3	FOC-8, 2"C

#	CONDUIT
1	2"C SPARE
2	FOC-4, 2"C
3	FOC-5, 2"C

#	CONDUIT
1	MC-2PC
2	MC-3PC

SITE PLAN
1" = 50'

NOTES:

1. THE CONDUIT ROUTING AS SHOWN IS APPROXIMATE. EXACT CONDUIT ROUTING SHALL BE FIELD VERIFIED.
2. THE CONTRACTOR SHALL VERIFY THE LOCATION OF THE UNDERGROUND CONDUITS AND UTILITIES BEFORE INSTALLING THE PROPOSED CONDUITS.
3. THE LOCATION OF THE ELECTRICAL PULL BOXES SHALL BE FIELD VERIFIED.
4. THE EXISTING CONDUIT BETWEEN THE BLOWER BUILDING AND THE OPERATIONS BUILDING SHALL BE REUSED TO INSTALL THE FIBER OPTIC CABLE.
5. THE EXISTING CONDUIT BETWEEN LPC-700/800 AND LPC-900 A/B SHALL BE REUSED TO PULL NEW FIBER OPTIC CABLES FOC-6 & FOC-8.
6. THE CONTRACTOR SHALL BORE UNDER THE STREETS OR SAW CUT THE STREET. IF SAWCUT HE SHALL BE RESPONSIBLE TO REFINISH TO MATCH THE EXISTING SURFACE.
7. SECTION-C IS THE SAME AS SECTION-B ON SHEET E5 EXCEPT THE FIBER CABLE IS FOC-4 INSTEAD OF FOC-8.
8. CONDUIT BETWEEN LPC-700/800 AND LCP-900 A/B IS EXISTING AND IS NOT SHOWN ON THIS DRAWING.
9. ALL FIBER OPTIC CABLE SHALL BE INSTALLED IN 2"C.

RECORD DRAWING
By: Date: 03-11-04
CAMP DRESSER & McKEE, INC.

GAI
Gupta & Associates, Inc.
consulting engineering
5430 Alpha Road, Suite 200
Dallas, Texas 75240
Tel: 972-490-7661
Fax: 972-490-7125
email: gainfo@swbell.net

ORIGINAL SCALE IN INCHES FOR REDUCED PLANS
0 1 2 3

REV. NO.	DESCRIPTION	APP'D	DATE
1	REVISED FOR RECORD	SDH	11/03

SEAL
STATE OF TEXAS
V. K. GUPTA
53097
LICENSED
PROFESSIONAL ENGINEER
3/7/01

SEAL

CDM Camp Dresser & McKee
consulting engineering construction operations

ELECTRICAL
SITE PLAN – 1

PROJECT NO.
R-0265-19-03
FILE No. WW4759-02

TITLE
KEEGANS BAYOU WWTP IMPROVEMENTS

CITY OF HOUSTON
DEPARTMENT OF PUBLIC WORKS AND ENGINEERING

REVIEWED BY

PRIVATELY FUNDED PUBLIC WORKS	CITY FUNDED PUBLIC WORKS
	PROJECT MANAGER
	CONSTRUCTION
	CHIEF ENGINEER

OTHER APPROVAL

TRAFFIC AND TRANSPORTATION	SPONSOR DEPARTMENT
CITY ENGINEER	DATE 3-13-2001
DIRECTOR OF PUBLIC WORKS AND ENGINEERING	DATE 3/16/01

SUBMITTED: GAI
SCALE: AS NOTED
DATE: MARCH, 2001
SURVEY BY:
F B NO:

DESIGNED BY: V.K. GUPTA
DRAWN BY: D.B. EISELT
CDM DWG NO: E-3
SHEET NO 51 OF 88 SHEETS
CITY DWG NO: 36813

S:\81982805\Keegans\30yr\ASBUILTS 11-12-03\SH51 rev_GAI.dwg, Layout1, 2/17/04 11:20:34 AM, Hernandezm3D