Document 00911

NOTICE OF
ADDENDUM NO. 2

Date of Addendum: 10/09/15

PROJECT NAME: Keegans Bayou and Greenridge WWTP Improvements

PROJECT NO: WBS No. R-000265-0079-4

BID DATE: October 15, 2015

FROM: J. Timothy Lincoln, P.E., City Engineer
City of Houston, Department of Public Works and Engineering
611 Walker St., Houston, Texas 77002
Attn: Gauher Khan, P.E., Project Manager

TO: Prospective Bidders

Written questions regarding this Addendum may be submitted to the Project Manager following the procedures specified in Document 00200 – Instructions to Bidders. Immediately notify the City Engineer through the named Project Manager upon finding discrepancies or omissions in the Bid Documents.

This Addendum includes:

ADDENDUM SYNOPSIS

Changes to Project Manual
- Bidding Requirements
- Specifications

Changes to Drawings
Clarifications

DATED: For Ebi Nassi
GHS
EN.
Ravi Kaleyatodi, P.E.
Senior Assistant Director
Engineering Branch
Engineering and Construction Division

STATE OF TEXAS
ERIC C. CARDWELL
105237
LICENSED
PROFESSIONAL ENGINEER

Eric Cardwell

END OF DOCUMENT

Document 00910

ADDENDUM NO. 2

Date of Addendum: _____

PROJECT NAME: Keegans Bayou and Greenridge WWTP Improvements

PROJECT NO: WBS No. R-000265-0079-4

BID DATE: October 15, 2015

FROM: J. Timothy Lincoln, P.E. , City Engineer
City of Houston, Department of Public Works and Engineering
611 Walker St., 15th Floor
Houston, Texas 77002
Attn: Gauher Khan, P.E. , Project Manager

STATE OF TEXAS
ERIC C. CARDWELL
105237
LICENSED
PROFESSIONAL ENGINEER

TO: Prospective Bidders

This Addendum forms a part of the Bidding Documents and will be incorporated into the Contract documents, as applicable. Insofar as the original Project Manual and Drawings are inconsistent, this Addendum governs.

This Addendum uses the change page method: remove and replace or add pages, or Drawing sheets, as directed in the change instructions below. Change bars (|) are provided in the outside margins of pages from the Project Manual to indicate where changes have been made; no change bars are provided in added Sections. Reissued Drawing Sheets show the Addendum number below the title block and changes in the Drawing are noted by a revision mark and enclosed in a revision cloud.

CHANGES TO PROJECT MANUAL

CONTRACT DOCUMENTS

1. Document 00010 – TABLE OF CONTENTS

   Remove Document 00010 and replace with revised Document 00010.

BIDDING REQUIREMENTS

2. Document 00410B – BID FORM PART B

   Remove Section 00410B and replace with revised Section 00410B.

SPECIFICATIONS

3. Section 01110 – SUMMARY OF WORK

   Delete Paragraph 1.02 A 2(c) (1)

   After Subsection 1.02 A (9), add subsection 1.02 A (10) as "Item No. 10: Repair of headworks area as shown on drawings excluding influent piping areas. Repair to include a full epoxy coating of all existing and proposed channel walls and floors in the aforementioned areas." AND renumber subsequent sections and corresponding item numbers. Refer to revised 00410B for full item number listing.

   Add Subsection 1.02 B 22
   Item No. 64: Protective Coating Concrete Surface Repair Preparation ½ inch or less.

   Add Subsection 1.02 B 23
   Item No. 65: Protective Coating Concrete Surface Repair Preparation greater than ½ inch.

   Remove Subsection 1.02 B 10 – Item No. 28

4. Section 03931 – CONCRETE REPAIR AND REHABILITATION

   Remove Section 03931and replace with revised Section 03931.

5. Section 07920 – CAULKING AND SEALANTS

   Add Subsection 2.01 (A) 3 (D) 4
   4. Any primers, as required, recommended by the manufacturer of the specified product, approved by the engineer.

   Add Subsection 2.02 (E) & (F)
   E. Sika Concrete Restoration Systems
   F. Avanti International

   Add Subsection 3.03 (H)
   H. Non-sag sealant: For best performance, sealant should be gunned into crack to a minimum of 1/4" in depth. Place the nozzle of the gun, either hand or air or

electric powered, into the bottom of the crack and fill entire crack. Keep the tip of the nozzle in the sealant, continue with a steady flow of sealant preceding the nozzle to avoid air entrapment. Avoid overlapping the sealant to eliminate the entrapment of air. Tool as required to properly fill the crack.

6. Section 09901S – Add the attached Section 09901S.

7. Section 09901 – PROTECTIVE COATINGS

Add Part 3, Item 3.08 – Concrete Surface Preparation and renumber subsequent sections accordingly.

3.08 CONCRETE SURFACE PREPARATION

A. The NACE/SSPC Joint Surface Preparation Standards for concrete surface preparation are incorporated in and made part of this specification. All references to SSPC SP-13/NACE No 6 designate the definitions and other requirements in these documents. The International Concrete Repair Institute (ICRI) Technical Guideline #03732, Guide to Surface Preparation of Concrete to Receive Sealers, Coatings and Polymer Overlays shall be used to visually evaluate the concrete surface profile.

B. Create a minimum surface profile for the system specified in accordance with the methods described in ICRI No. 03732 to achieve profile CSP-4 to CSP-5. (Note: The minimum dry film thickness of the coating to protect a concrete surface with a profile of CSP-4, or CSP-5 shall be 80 mils.) (Note: The minimum dry film thickness of the coating to protect a concrete surface with a profile of CSP-6 or greater shall be a minimum of 125 mils or greater.)

C. Concrete surface defects, such as deteriorated concrete or masonry, hollow areas, bugholes, honeycombs, cracks and voids shall be filled flush and true with the specified structural lining compound in accordance with ICRI Technical Guide No 03730 "Guide for Selecting Application Methods for the Repair of Concrete Surfaces". Fins, trowel marks, and all protrusions or rough edges shall be removed. All active water leaks shall be stopped by use of polyurethane chemical grouting compounds.

D. Concrete Surface Repair: Surface voids and defects

1. Areas less than 1/2" deep shall be repaired with a rapid cure vertical grade repair mortars, hydraulic cement, or waterbased epoxy cementitious resurfacer.

2. Areas that are greater than 1/2" deep shall be repaired with specified structural lining repair mortar.

E. Provide a clean, saturated surface dry (SSD) concrete surface with no free standing or moving water, with a minimum surface profile as defined above. All substrates are to be vacuumed, swept and blown down with clean, dry air to remove spent abrasive, dust and other foreign material that might interfere with the adhesion of the primer and lining.

F. Debris resulting from surface preparation and cleaning shall not be allowed to enter any water streams and shall be removed from the structure.

8. Section 11237 – VORTEX GRIT REMOVAL EQUIPMENT

Add Section Part 2 – Products Subsection 2.3 C 7 – Ball Valves
Stainless steel ball valves shall be manually actuated as shown on the drawings. Valves shall be full port two piece bolted body type valves with a minimum pressure rating of 250 psig and bi-directional shut-off capability. The body, ball, and stem shall be of stainless steel Type 316 construction (ASTM CF8M – casting). The seat and stem seals shall be PTFE or UHMW or as required for chemical compatibility for the intended service with multiple stem sealing barriers for long term sealing. Provide compliance of material compatibility. The valves shall have a full floating ball and be non-lubricated. Valve seats shall be easily accessible and replaceable. Actuating handle shall be manufactured of 300 Series stainless steel and shall be a lever type handle unless dictated otherwise by Drawings and/or clearance interference issues. Provide stem extension and or automatic actuator bracket of 300 Series stainless steel and a 17-4PH stainless steel coupling where required. All bolting shall be compatible and as corrosion resistant as the body and stem material. Use 316 stainless steel as a base, the ball and seats shall be coated with an abrasion-resistant skin of chromium oxide, lapped together for form a matched metal-to-metal sealing set. The coating has a hardness of Vickers 1200-1400, which is approximately equivalent to Rockwell C 72-74.Valves shall be as manufactured by Neles-Jamesbury or equal WKM or Conbraco.

9. Section 13300 – PROCESS INSTRUMENTATION AND CONTROLS – GENERAL PROVISIONS

Remove Section 13300 and insert revised Section 13300.

10. Section 13300 Attachment "A"

    Remove Attachment "A" and insert revised Attachment "A."

11. Section 13300 Attachment "B"

    Remove Attachment "B" and insert revised Attachment "B."

12. Section 13315 – PROCESS INSTRUMENTATION AND CONTROLS - PRODUCTS

    Remove Section 13315 and replace with revised Section 13315.

13. Section 13500 – COMMUNICATIONS BACKBONE CABLING

    Delete Part 1, Subsection 1.2 – MEASUREMENT AND PAYMENT

    Add Subsection 1.1

    1.1 MEASUREMENT AND PAYMENT

    A. No separate payment will be made for work performed under this Section. Include payment in lump sum bid for work of which this is a component part.

    Add Subsection 2.2 (A) 1

    1. Provide minimum (4) four strand multimode fiber optic cable.

    Delete Subsection 2.2 (A) 9 and add revised Subsection 2.2 (A) 9

    9. Optical fibers conductors shall follow standard color code schemes. Fiber numbers and binders shall correspond to the color codes as follows:
    a. Fiber/Binder No. 1 – blue
    b. Fiber/Binder No. 2 – orange
    c. Fiber/Binder No. 3 – green
    d. Fiber/Binder No. 4 – brown

14. Section 13600 – CONTROL AND INSTRUMENTATION CABLE
    Delete Section 13600 Part 1 General, Subsection 1.01 MEASUREMENT AND PAYMENT and add the following:

    1.01 MEASUREMENT AND PAYMENT

    A. No separate payment will be made for work performed under this Section. Include payment in lump sum bid for work of which this is a component part.

15. Section 15106 – Insert Part 2, Item 2.06 Automation Interface.

    2.06 Automation Interface

    A. Provide actuators with dry contacts, one normally open and one normally closed, indicating full open gate position.

    B. Provide actuators with dry contacts, one normally open and one normally closed, indicating full closed gate position.

16. Section 15138 – ELECTRIC VALVE ACTUATOR

    Delete entire section.

17. Section 15257 – CHEMICAL STORAGE TANKS

    Remove Section 15257 and replace with revised Section 15257.

18. Section 15782 – PACKAGED, OUTDOOR, HEATING AND COOLING AIR CONDITIONERS

    Delete Subsections: 2.4 (C), 2.5 (D), (F) & (G), 2.6, 2.9, 2.10 (A) and (B).

    Remove Subsection 2.12 and replace with the following:

    2.12 Controls

    A. Provide units with remote wall mounted thermostats and thermal shields.

    B. Factory-wire connection for control power supply.

    C. Unit Controls: Relay or solid state control board and components with field-adjustable control parameters.

    D. Control devices, including sensors, transmitters, relays, switches, thermostats, operators, actuators and valves, shall be manufacturer's standard items to accomplish indicted control functions.

    E. Supply Fan Control: Engage fan automatically on cooling demand or on manual override signal from thermostat.

    F. Refrigeration System Controls: Engage refrigeration on demand signal from

thermostat.

Delete Subsections 3.4 (B) 1, 8, 9, 10, 21, 24(a), 24(b), 25, 26

Delete the word "humidity" from Subsection 3.5 (A).

Delete the last sentence from Subsection 3.6 (A).

19. Section 16175 – LOW VOLTAGE VARIABLE FREQUENCY DRIVES
    Delete Part 3, Subsection 3.02 (C).

CHANGES TO DRAWINGS

20. Remove Sheet 20, Grit Removal System Foundation Plan (Dwg. KB-S-07) and replace with revised Sheet 20, Grit Removal System Foundation Plan (Dwg. KB-S-07).

21. Update Sheet 21, Grit Removal System Grating & Base Slab Plans (Dwg. KB-S-08) Note 9 with revised Sheet 21, Grit Removal System Grating & Base Slab Plans (Dwg. KB-S-08) Note 9.

    9. ALL INTERIOR SURFACES OF EXISTING AND NEW WALLS AND SLABS OF HEADWORKS STRUCTURE, BOTH GRIT CHAMBERS, AND ALL CONNECTING INFLUENT, EFFLUENT, AND BYPASS CHANNELS UP TO EAST WALL OF AERATION BASIN STRUCTURE SHALL BE COATED WITH NEW EPOXY COATING SYSTEM (TYPE 100, 101, 102, 108, OR 109 OF SPECIFICATION 09901), EXCEPT THAT THIS COATING NEED NOT BE APPLIED TO WALLS OR SLABS OF JUNCTION BOX AT SOUTH SIDE OF HEADWORKS STRUCTURE AT LOCATION OF INFLUENT PIPING WITHIN AREA CONTAINED BY CLOSEST GATES AND OVERFLOW WEIRS (SEE PLAN 2 ON DWG KB-S-15). ALL EXTERIOR SURFACES OF NEW WALLS OF BOTH GRIT CHAMBERS, AND ALL CONNECTING INFLUENT AND EFFLUENT CHANNELS UP TO EAST WALL OF AERATION BASIN STRUCTURE SHALL BE COATED WITH PAINT TO MATCH PAINT ON EXISTING EXTERIOR WALL SURFACES (ACRYLIC LATEX COATING SYSTEM 4 IS ACCEPTABLE).

22. Update Sheet 28, Headworks/Grit Removal System Structural Repair Plans (Dwg. KB-S-15) Note 9 with revised Sheet 28, Headworks/Grit Removal System Structural Repair Plans (Dwg. KB-S-15) Note 9.

    9. AT EXTERIOR SURFACES OF EXISTING STRUCTURES WHERE LEAKING CRACKS AND JOINTS ARE REPAIRED PER NOTE 4, APPLY TOUCH-UP COAT OF PAINT TO MATCH EXISTING PAINT AFTER REPAIR HAS

BEEN COMPLETED (ACRYLIC LATEX COATING SYSTEM 4 IS ACCEPTABLE).

23. Remove Sheet 78, Structural Typical Sections and Details (Dwg. GR-S-09) and replace with revised Sheet 78, Structural Typical Sections and Details (Dwg. GR-S-9).

24. Update Sheet 82, Site Plan Demolition Mechanical, Note 3 last sentence to state "Fill the remaining portions with select fill and cut and dispose of wall to **5** feet below grade."

25. Remove Sheet 86, Blower Building Plan (Dwg. GR-M-03) and replace with revised Sheet 86, Blower Building Plan (Dwg. GR-M-03).

26. Remove Sheet 87, Blower Building Sections (Dwg. GR-M-04) and replace with revised Sheet 87, Blower Building Sections (Dwg. GR-M-04).

27. Update Sheet 103, Proposed One-Line Diagram (Dwg. GR-E-03) and ADD THE FOLLOWING GENERAL NOTE 1:

    1. PROVIDE 2 SPARE VFD'S IN ADDITION TO THE EIGHT (8) SHOWN ON THE PLANS. TURN THE SPARE DRIVES OVER TO CITY OF HOUSTON CONSTRUCTION PROJECT MANAGER.

28. Remove Sheet 113, Aerator and Blower P&ID (Dwg. GR-E-13) and replace with revised Sheet 113, Aerator and Blower P&ID (Dwg. GR-E-13).

CLARIFICATIONS

29. Question - Can the City or the Engineer please provide as built drawings of headworks and grit structures at Keegans Bayou along with as built drawings of the blower building at Greenridge to see what items will need to be demolished and salvaged in these areas.

    Response – As Built Drawings can be downloaded from the following location:

    Keegans Bayou
    https://www.dropbox.com/sh/a3qpoyh3qlvkxq4/AAC0sJp3HuiZmm-F-8nY7oRfa?dl=0

    Greenridge
    https://www.dropbox.com/sh/myqtrrx3erwe3c0/AADLI_FQB-hS2I6Qro6_H_eGa?dl=0

30. Question - The summary of work has us diverting flow through the existing bypass channel at the headworks in order to construct the new grit basins. It appears that there are existing pipes at the north end of the channel near the effluent weir (see Attached Figure 1 below). Are these pipes or existing piers under this structure?

    Response – Figure 1 was not provided, but we presume that the question is referring to the existing drilled shafts and drilled piers underneath the north end of the channel near the effluent weir as are shown on Plan 1/KB-S-02.

31. Question - Since the existing (exposed) walls of concrete structures have an unknown existing paint/coating, should we include painting/coating the proposed (exposed) walls of all proposed cast-in-place concrete structures to match the existing? If so please specify a coating system to use for exterior concrete coatings.

    Response - In accordance with Note 9/KB-S-15, a touch-up coat of paint is to be applied only at the locations on the exterior surfaces of the Keegans Bayou WWTP Headworks and Grit Removal System Structures shown in Plan 2/KB-S-15, including the By-Pass, Influent, and Effluent Channels, where the leaking cracks and joints are repaired per Note 4/KB-S-15. Use Protective Coating System 4, Acrylic Latex. Revision 1 of Note 9/KB-S-08 adds System 4 as an acceptable coating system for the exterior surfaces. Revision 1 of Note 9/KB-S-15 adds System 4 as an acceptable coating system for the exterior surfaces

32. Question - Sheet KB-S-05 Note 9 states to coat interior of surfaces of existing and new concrete slabs and walls with System 100, 101, or 102. Note 1.05 C of 09901 does not recommend use of these systems for concrete unless specified elsewhere. None of these systems are 100% solids epoxy systems which is typically a standard for submerged concrete coatings. Furthermore, most 100% solids epoxy concrete coatings require min. 80 mils of coverage. These systems have a significantly smaller coverage than 80 mils. Is there a more appropriate system that we should use?

    Response - Presumably the question refers to Note 9 on Dwg KB-S-08, not KB-S-05. Coating Systems 100, 101, and 102 are all acceptable coating systems as is indicated by Note 9/KB-S-08. Systems 108 and 109, which are described in Supplement 09901S to Specification Section 09901, Protective Coatings, are also acceptable coating systems. Revision 1 of Note 9/KB-S-08 adds Systems 108 and 109 as acceptable coating systems.

33. Question - Are there any existing coatings on interior headworks area channel walls & floors that need to be removed?

    Response – Existence of existing coatings on interior area channel walls and floors could not be definitively determined.

34. Question - System 100, 101, or 102 does not specify a surface prep for the

concrete surfaces. Is this required prior to applying the coating system? If so please specify.

Response - Surface preparation is required and shall be in accordance with revised Specification Section 09901 Paragraph 3.08 and per the coating manufacturer's instructions.

35. Question - System 100, 101, or 102 does not call for restoration of any deteriorated existing concrete surfaces. Is this required prior to applying the coating system? If so please specify a system and add a unit price bid item for per square foot applications so that the city only pays for product that is applied and contractors do not have to guess at this quantity.

    Response - The existing concrete surfaces to receive Coating Systems 100, 101, or 102 that are mentioned in Note 9/KB-S-08 are not anticipated to be deteriorated. If deteriorated surfaces are discovered during construction, notify the Engineer at that time and corrective action will be provided which will depend on the type and extent of the deterioration.

36. Question - System 100, 101, or 102 does not specify any primers to be applied to the bare concrete prior to the coating system to prevent off gassing pin holes in the coating. Furthermore, no material is specified to patch or repair any pin holes that occur in the coating system. If this is required please specify a system and add a unit price bid item for per square foot applications so that the city only pays for product that is applied and contractors do not have to guess at this quantity.

    Response - Prime coat requirements for Coating Systems 100, 101, and 102 are given in Specification Section 09901 Paragraphs 2.03B.1, 2.03C.1, and 2.03D.1. Pin holes shall be patched per coating manufacturer's instructions.

37. Question - Do the existing grating supports beams need to be removed and coating applied behind the existing beams to have 100% coverage of the coating in the channels?

    Response – Yes.

38. Question - Drawing sheet KB-S-15, Note 4 – specifies approx. 625 feet of existing cracks & joints in exterior (exposed) concrete walls and base of slab of headworks and grit removal structures. This notes states that this work is lump sum with an additional unit price that may be used beyond the 650 LF. Unfortunately the city inspectors will not pay the contractor out of the extra unit prices for lump sum work. This work would need to be listed as a unit price in the base bid and then if the quantity in the base bid is overrun then the extra unit price item would govern. I believe this is the engineer's intent by the note, but bid items should be added to reflect this. Furthermore, 650 LF of crack is a good quantity to calculate the labor to install the number of injection ports we will need to use to inject the hydrophilic

foam, but the contractors have no way of knowing how much material (gallons of hydrophilic foam) will be needed simply by the linear foot. Some cracks are more impervious than others and will require more gallons of foam than others. It would be beneficial to The City to add a unit price in the base bid item for gallons of hydrophilic foam and an extra unit price for overrun. Also a unit price in the base bid item for linear feet of crack repair for installation of injection ports and an extra unit price for overrun.
Response – Please refer to revised Specification Section 00410B where the appropriate items have been added.

39. Question - Note 3 on sheet KB-S-05 states that the contractor is responsible for the design of the temp. Support beams at the bypass channel during the demo. Is the design that is listed in the notes of the drawings sufficient to perform the task or is the contractor required to redesign the beams? Please clarify.

    Response – Any deviations from the size and spacing of the temporary steel lateral support bracing beams at the top of the bypass channel are intended to be the responsibility of the contractor to redesign. The intent as shown on the drawings is to create a welded inverted U-shape structural steel frame that is fabricated in the shop and can be set in place at the jobsite as a one-piece frame at each location. The intent is to create a tight fitting frame that will laterally support the existing west wall of the grit chamber influent channel after the slab and east wall of the grit chamber influent channel is demolished. The frame is designed to support the full hydrostatic pressure on the walls when the bypass channel is full of water. As shown in Section 8/KB-S-06, the vertical beams are intended to extend down at least 4 feet. Shims can be used to create a tight fit. The intent is not to anchor the steel frame to the concrete, but this is an option the contractor may choose to hold the steel frame in place if the contractor is concerned about the frame being dislodged during the demolition of adjacent items. If concrete anchors are used, they should be removed afterwards and the drilled holes should be patched.

40. Question - On sheet KB-s-07 there are 3 new 24"/48" drill piers shown on the north end of the grit structure that are behind existing columns. One of these piers is shown under the existing bypass channel. This will need to be moved as we cannot mobilize a drill truck to get to this area. Could these 3 piers be changed to a spread footing or moved and then a cap added. Please look at the constructability of what is shown in this area.

    Response - The three new drilled piers on the north side of the existing grit chamber are located between the existing column-supported Effluent Channel from the Grit Chamber and the Bypass Channel, which is presumably what LEM means by "behind existing columns". All of the existing Effluent Channel concrete, with the exception of the bottom portion of the columns, is to be demolished as is shown on Plan 1/KB-S-05, which should allow access for a small compact drilling rig to be driven between the existing columns into this area. If the Contractor cannot provide a drilling rig that can fit between the existing columns, then it

would be acceptable for the Contractor to demolish a couple of the existing columns that support the Effluent Channel and then replace them after the drill piers are installed. One of the piers is close to the existing Bypass Channel, but as is indicated by the dashed box at this location in Plan 2/KB-S-08, the column and drilled pier at this location is actually located under the new wall of the new Effluent Channel from the Grit Chamber. If the Contractor is not capable of drilling a new pier at this location, it would be acceptable to shift the pier to the northeast and add a reinforced concrete pier cap that extends over the shifted pier and continues over to the adjacent closest new drilled pier on the northeast side of the shifted pier (i.e. have one large pier cap over both drilled piers) as is shown in Revision 1 to Drawing KB-S-07. It would not be acceptable to replace these drilled piers with spread footings.

41. Question - On sheet GR-S-02 3 of the drilled piers we have to install on the north east end of the building are shown to be right on top of the abandoned lift station on site. Note 3 on sheet GR-MC-01states to remove the 14' deep lift station as needed to install the piers. In our experience this is very difficult and expensive to do. We would have to excavate down to the slab of the lift station and demolish it to remove it. Then we would have to compact the soil back in this area. It is very difficult to try and drill a bell pier in soil that has been recently removed and replaced. Could the electrical building be relocated to the area where we are demolishing the existing building slab and then run duct bank to the new blower building? Or possibly change these piers to a shallow spread footing in lieu of piers over the lift station. Please look at the constructability of what is shown in this area.

    Response - Note 3/GR-MC-01 does not state to remove the 14-ft-deep Lift Station as needed to install the piers. The Electrical Building cannot be relocated.

42. Question - On sheet GR-E-04 the notes tell us to match the new additional level of the cable rack at the aeration basins to the existing typical structure. Please provide some type of typical detail so that we do not have to guess at this item.
    Response - A new detail showing the requirements for the typical electrical conduit cable support rack structure is provided in Detail 1 of Revision 1 of Dwg. GR-S-09.

43. Question - Sheet GR-M-01 only shows us installing 4 new DO probes at the aeration basins. Why would we not need 8 new probes? Please clarify.

    Response - While there are 8 aeration basins, there are only 4 process trains and 2 aeration basins are dedicated to each train as first and second stage aerator. The DO probe is located within the second stage aeration basin to ensure a minimum DO level prior to discharge. The speed of the aerators in both 1st stage and 2nd stage is controlled by one DO probe. See Division 13 for more description of control logic.

44. Question - Sheet GR-M-03 shows spread footings for the foundations of the blower building pipe gallery supports. I believe these were changed to bell piers in the structural drawings please clarify what is to be installed.

    Response - 16. The spread footing foundations shown on Dwg GR-M-03 are not correct. The foundation system shown on Plan 1/GR-S-02 is required to be installed.

45. Question - Please specify minimum generator requirements for the temporary generators?

    Response - Generator should be sized to carry the load of the 5 feeders out of the main board which must remain in operation while working on the main switchboard. Breakers shown on GR-E-02 are a 1200A breaker feeding the existing blower building, a 2000A breaker feeding the MCC, 200A feeding De-watering, 200A feeding Office & Lab, 200A feeding headworks. The contactor shall provide a metering test for a week to determine the minimum size generator/s required. IA estimates no more than a 1MW and 500KW generator will be required.

46. Question - Section 13300- Clarification. Is the PCSI responsible for the PLC control systems, control panels, components, field devices, testing, commissioning, training and documentation of the Process Instrumentation and Controls and the electrical contractor resposible for conduit and cabling of these devices and PLCs? Who is the PCSI?

    Response: The contract scope of work includes furnishing and installing PLC control systems, control panels, components, field devices, testing, commissioning, training, and documentation, conduit, and cabling. The actual assignment of work is the responsibility and purview of the prime contractor, however, the contract documents have been assembled with an assumed delineation as described herein. Division 13 Instrumentation and Controls specifies all of the former list including cabling but not conduit, which is specified in Division 16 Electrical. The qualifications for Division 13 Instrumentation and Controls Providers are found in Section 13300 paragraph 1.07, which can be met by any number of local providers. The Division 13 Instrumentation and Controls Provider must coordinate their work with the Process Controls System Integrator/Software Engineer (PCSI) per section 13300 paragraph 1.02.C. The requirements of the PCSI are found in section 13310 which includes PLC software programming, SCADA software integration, and other specific tasks but does not include furnishing or installing any controls hardware. Please note in particular that there is only one pre-qualified PCSI vendor as identified in section 13310 paragraph 5.02, and they historically do not perform hardware installations.

47. Question - Please clarify why there are 2 EMO specs (15106 & 15138). Also,

spec 15138, Part 1.1A references an EMO schedule but there isn't one.

Response – Section 15138 has been deleted.

END OF ADDENDUM NO. 2

DATED: For Ebi Nasir

Ravi Kaleyatodi, P.E.
Senior Assistant Director
Engineering Branch
Engineering and Construction Division

END OF DOCUMENT

Document 00010

TABLE OF CONTENTS

NOTE: Bold capitalized Specification Sections are included in the City of Houston Department of Public Works and Engineering Standard Construction Specifications for Wastewater Collection Systems, Water Lines, Storm Drainage, Street Paving, and Traffic located here: **http://documents.publicworks.houstontx.gov/document-center/cat_view/88-engineering-and-construction/92-specifications/208-division-02-16-standard-specifications.html**; and are incorporated in Project Manuals by reference as if copied verbatim. Documents listed "for filing" are to be provided by Bidder and are not included in this Project Manual unless indicated for example only. The Document numbers and titles hold places for actual documents to be submitted by Contractor during Bid, post-bid, or construction phase of the Project. Specification Sections marked with an asterisk (*) are amended by a supplemental specification, printed on blue paper and placed in front of the Specification it amends. Documents in the 200, 300 and 400 series of Division 00, except for Document 00410B – Bid Form, Part B, are not part of the Contract.

Doc. No.	Document Title	Doc. Date
	INTRODUCTORY INFORMATION	
00010	Table of Contents	08-01-2015
00015	List of Drawings	02-01-2004
00042	List of Designated Subcontractors and Suppliers	02-01-2004
	BIDDING REQUIREMENTS	
INSTRUCTIONS TO BIDDERS		
00200	Instructions to Bidders	08-01-2015
00210	Supplementary Instructions to Bidders	08-01-2015
00220	Request for Bid Information	06-11-2004
INFORMATION AVAILABLE TO BIDDERS		
00320	Geotechnical Information	09-02-2005
BID FORMS AND SUPPLEMENTS		
00410	Bid Form, Parts A & B	08-01-2015
00430	Bidder's Bond (For filing; Example Form)	02-01-2004
00450	Bidder's Statement of MWBE/PDBE/DBE/SBE Status	07-01-2013
00452	Contractor Submission List - Fair Campaign Ordinance	04-30-2004
00453	Bidder's Statement of Residency	02-01-2004
00454	Affidavit of Non-interest	02-01-2004
00455	Affidavit of Ownership or Control	09-04-2007
00457	Conflict of Interest Questionnaire	02-28-2006
00459	Contractor's Statement Regarding Previous Contracts	

Doc. No.	Document Title	Doc. Date
	Subject to EEO	02-01-2004
00460	(POP-1) Pay or Play Acknowledgement Form	07-03-2012
00470	Bidder's MWSBE Participation Plan	08-01-2015
00471	Pre-bid Good Faith Efforts	08-01-2015
00472	Bidder's Goal Deviation Request	08-01-2015

POST-BID PROCEDURES

00495	Post-bid Procedures	08-01-2013

CONTRACTING REQUIREMENTS

AGREEMENT

00501	Resolution of Contractor	02-01-2010
00520	Agreement	07-01-2013
00570	Contractor's Revised MWSBE Participation Plan	08-01-2013
00571	Record of Post-Award Good Faith Efforts	08-01-2013
00572	Contractor's Request for Plan Deviation	08-01-2013

BONDS AND CERTIFICATES

00600	List of Proposed Subcontractors and Suppliers	07-01-2013
00601	Drug Policy Compliance Agreement	02-01-2004
00602	Contractor's Drug Free Workplace Policy (For filing)	
00603	Checklist for Drug Policy Submittal	02-01-2004
00604	History of OSHA Actions and List of On-the-job Injuries	02-01-2004
00605	List of Safety Impact Positions	02-01-2004
00606	Contractor's Certification of No Safety Impact Positions	02-01-2004
00607	Certification Regarding Debarment, Suspension, and Other Responsibility Matters	02-01-2004
00610	Performance Bond	05-17-2005
00611	Statutory Payment Bond	05-17-2005
00612	One-year Maintenance Bond	05-17-2005
00613	One-year Surface Correction Bond	05-17-2005
00620	Affidavit of Insurance (with attached Certificates of Insurance)	02-01-2004
00624	Affidavit of Compliance with Affirmative Action Program	02-01-2004
00630	(POP-2) Certification of Compliance with Pay or Play Program	07-03-2012
00631	(POP-3) City of Houston Pay or Play Program – List of Subcontractors	07-03-2012
00633	Equal Employment Opportunity–Certification By Material Suppliers	02-01-2010
00642	Monthly Subcontractor Payment Reporting Form	02-01-2010
00646	Payment Notification Explanation of Withholding	02-01-2010

Doc. No.	Document Title	Doc. Date
GENERAL CONDITIONS		
00700	General Conditions	08-01-2015
SUPPLEMENTARY CONDITIONS		
00800	Supplementary Conditions	08-01-2015
00805	Equal Employment Opportunity Program Requirements	05-01-2012
00808	Requirements for the City of Houston Program for Minority, Women, and Small Business Enterprises (MWSBE), and Persons with Disabilities Business Enterprises (PDBE) Program	08-01-2013
00820	Wage Scale for Engineering Construction	02-01-2015
00821	Wage Scale for Building Construction	02-01-2015
00830	Trench Safety Geotechnical Information	02-01-2004
00840	Pay or Play Program Requirements	07-03-2012
ADDENDA AND MODIFICATIONS		
00931	Request for Information	02-01-2004

SPECIFICATIONS

DIVISION 1 - GENERAL REQUIREMENTS		
01110	Summary of Work	10-02-2015
01145	Use of Premises	01-01-2011
01255	Change Order Procedures	08-01-2003
01270	Measurement and Payment	08-01-2003
01292	Schedule of Values	08-01-2003
01312	Coordination and Meetings	08-01-2003
01321	Construction Photographs	08-01-2003
01325	Construction Schedule	08-01-2003
01326	Construction Schedule (Bar Chart)	08-01-2003
01330	Submittal Procedures	08-01-2003
01340	Shop Drawings, Product Data, and Samples	08-01-2003
01351	Environmental Safety and Worker Protection	01-01-2011
01410	TPDES Requirements (with Attachments)	02-01-2011
01422	Reference Standards	08-01-2003
01450	Contractor's Quality Control	08-01-2003
01452	Inspection Services	08-01-2003
01454	Testing Laboratory Services	08-01-2003
01502	Mobilization	08-01-2008
01504	Temporary Facilities and Controls	01-01-2011
01506	Diversion Pumping	08-01-2003
01520	Temporary Field Office	02-08-2012
01554	Traffic Control and Street Signs	07-01-2012
01555	Traffic Control and Regulation	01-01-2011

Doc. No.	Document Title	Doc. Date
01562	Tree and Plant Protection	01-01-2011
01570	Storm Water Pollution Control	01-26-2012
01575	Stabilized Construction Access	02-01-2011
01576	Waste Material Disposal	08-01-2003
01578	Control of Ground and Surface Water	01-01-2011
01580	Project Identification Signs	08-01-2003
01581	Excavation in Public Way Permit Signs	08-01-2003
01610	Basic Product Requirements	01-01-2011
01630	Product Substitution Procedures	08-01-2003
01725	Field Surveying	01-01-2011
01731	Cutting and Patching	01-01-2011
01732	Procedure for Water Valve Assistance (with Attachments)	08-01-2003
01740	Site Restoration	08-01-2003
01755	Starting Systems	08-01-2003
01770	Closeout Procedures	08-01-2003
01782	Operations and Maintenance Data	08-01-2003
01785	Project Record Documents	08-01-2003
DIVISION 2 - SITE WORK		
02081	**CAST-IN-PLACE CONCRETE MANHOLES**	**01-01-2011**
02082	**PRECAST CONCRETE MANHOLES**	**01-01-2011**
02083	**FIBERGLASS MANHOLES**	**01-01-2011**
02084	**FRAMES, GRATES, RINGS, AND COVERS**	**08-01-2008**
02085	**VALVE BOXES, METER BOXES, AND METER VAULTS**	**01-01-2011**
02086	**ADJUSTING MANHOLES, INLETS, AND VALVE BOXES TO GRADE**	**01-01-2011**
02087	**BRICK MANHOLE FOR STORM SEWERS**	**10-01-2002**
02101	Sludge/Settled Debris Removal	03-06-2014
02136	**WASTE MATERIAL HANDLING, TESTING AND DISPOSAL**	**01-01-2011**
02220	Demolition	10-25-2013
02221	**REMOVING EXISTING PAVEMENTS AND STRUCTURES**	**07-01-2009**
02222	**ABANDONMENT OF SEWERS**	**01-01-2011**
02233	Clearing and Grubbing	09-06-2013
02260	**TRENCH SAFETY SYSTEM**	**02-01-2011**
02315	**ROADWAY EXCAVATION**	**07-01-2009**
02316	**EXCAVATION AND BACKFILL FOR STRUCTURES**	**01-01-2011**
02317	**EXCAVATION AND BACKFILL FOR UTILITIES**	**01-01-2011**
02318	**EXTRA UNIT PRICE WORK FOR EXCAVATION AND BACKFILL**	**01-01-2011**
02319	**BORROW**	**01-01-2011**

Doc. No.	Document Title	Doc. Date
02320	**UTILITY BACKFILL MATERIALS**	**01-01-2011**
02321	**CEMENT STABILIZED SAND**	**01-01-2011**
02322	**FLOWABLE FILL**	**08-01-2008**
02330	**EMBANKMENT**	**10-01-2002**
02336	**LIME-STABILIZED SUBGRADE**	**10-01-2002**
02337	**LIME/FLY-ASH STABILIZED SUBGRADE**	**10-01-2002**
02338	**PORTLAND CEMENT STABILIZED SUBGRADE**	**10-01-2002**
02447	**AUGERING PIPE AND CONDUIT**	**10-01-2002**
02448	**PIPE AND CASING AUGERING FOR SEWERS**	**10-01-2002**
02466	Drilled Piers	10-25-2013
02501	**DUCTILE IRON PIPE AND FITTINGS**	**02-01-2011**
02502	**STEEL PIPE AND FITTINGS**	**01-01-2011**
02503	**COPPER TUBING**	**10-01-2002**
02504	**CENTRIFUGALLY CAST FIBERGLASS PIPE**	**02-01-2011**
02505	**HIGH DENSITY POLYETHYLENE (HDPE) SOLID AND PROFILE WALL PIPE**	**02-01-2011**
02506	**POLYVINYL CHLORIDE PIPE**	**01-01-2011**
02507	**PRESTRESSED CONCRETE CYLINDER PIPE**	**01-01-2011**
02508	**EXTRA STRENGTH CLAY PIPE**	**02-01-2011**
02509	**FIBERGLASS REINFORCED PIPE FOR PRESSURE MAINS**	**01-01-2011**
02511	**WATER LINES**	**01-01-2011**
02514	**DISINFECTION OF WATER LINES**	**01-01-2011**
02515	**HYDROSTATIC TESTING OF PIPELINES**	**01-01-2011**
02521	**GATE VALVES**	**01-01-2011**
02522	**BUTTERFLY VALVES**	**01-01-2011**
02523	**PRESSURE REDUCING VALVES**	**10-01-2002**
02527	**POLYURETHANE COATINGS ON STEEL OR DUCTILE IRON PIPE**	**10-01-2002**
02528	**POLYETHYLENE WRAP**	**01-01-2011**
02531	**GRAVITY SANITARY SEWERS**	**01-01-2011**
02532	**SANITARY SEWER FORCE MAINS**	**01-01-2011**
02533	**ACCEPTANCE TESTING FOR SANITARY SEWERS**	**01-01-2011**
02555	**MANHOLE REHABILITATION**	**01-01-2011**
02611	**REINFORCED CONCRETE PIPE**	**02-01-2011**
02612	**PRECAST REINFORCED CONCRETE BOX SEWERS**	**10-01-2002**
02613	**BAR WRAPPED STEEL CYLINDER PIPE**	**01-01-2011**
02621	**GEOTEXTILE**	**10-01-2002**
02622	PVC Pipe (Small Diameter)	09-06-2013
02631	**STORM SEWERS**	**01-26-2012**
02632	**CAST-IN-PLACE INLETS, HEADWALLS, AND WINGWALLS**	**10-01-2002**
02633	**PRECAST CONCRETE INLETS, HEADWALLS, AND WINGWALLS**	**10-01-2002**
02642	**CORRUGATED METAL PIPE**	**10-01-2002**

Doc. No.	Document Title	Doc. Date
02643	**PLATE CULVERT STRUCTURES**	**10-01-2002**
02712	**CEMENT STABILIZED BASE COURSE**	**10-01-2002**
02713	**RECYCLED CRUSHED CONCRETE BASE COURSE**	**07-01-2009**
02751	**CONCRETE PAVING**	**07-01-2009**
02752S	*Concrete Pavement Joints*	*12-29-2009*
***02752**	**CONCRETE PAVEMENT JOINTS**	**10-01-2002**
02753	**CONCRETE PAVEMENT CURING**	**10-01-2002**
02754	**CONCRETE DRIVEWAYS**	**09-01-2002**
02775	**CONCRETE SIDEWALKS**	**10-01-2002**
02820	Bollards	03-28-2014
02821	Chain Link Fences and Gates	10-15-2012
02830	Fences and Gates	10-15-2012
02911	**TOPSOIL**	**10-01-2002**
02921	**HYDROMULCH SEEDING**	**01-01-2011**
02922	**SODDING**	**07-01-2009**
02951	**PAVEMENT REPAIR AND RESTORATION**	**07-01-2009**
DIVISION 3 - CONCRETE		
03100	Concrete Formwork	10-15-2012
03151	Joints in Concrete Structures	10-15-2012
03211	Reinforcing Steel	10-15-2012
03300	Cast-In-Place Concrete	10-15-2012
03301	Minor Cast-In-Place Concrete	03-28-2014
03310	Structural Concrete	10-15-2012
03315	**CONCRETE FOR UTILITY CONSTRUCTION**	**10-01-2002**
03350	Concrete Finishing	10-15-2012
03390	Concrete Curing	10-15-2012
03410	Precast Concrete Hollow-Core Planks	03-12-2014
03411	Structural Precast Concrete	10-25-2013
03600	Structural Grout	10-15-2012
03931	Concrete Repair and Rehabilitation	10-02-2015
DIVISION 4 - MORTAR		
04061	**MORTAR**	**10-01-2002**
04062	Unit Masonry System	03-11-2014
04210	**BRICK MASONRY FOR UTILITY CONSTRUCTION**	**10-01-2002**
04810	Unit Masonry Assemblies	03-06-2014
DIVISION 5 - METALS		
05051	Anchor Systems	04-15-2014
05120	Structural Steel	06-11-2013
05400	Cold Formed Metal Framing	10-25-2013

Doc. No.	Document Title	Doc. Date
05501	Metal Fabrications	10-25-2013
05520	Metal Railing	10-25-2013
05521	Aluminum Handrails	10-25-2013
DIVISION 6 - WOOD AND PLASTICS		
06100	Rough Carpentry	10-25-2013
06530	Fiberglass Grating System	03-06-2014
06601	Glass Fiber and Resin Fabrications	10-25-2013
06611	FRP Enclosures	09-06-2013
DIVISION 7 - THERMAL AND MOISTURE PROTECTION		
07212	Board Insulation	10-25-2013
07213	Blanket Insulation	10-25-2013
07511	Built-Up Asphalt Roofing	10-15-2012
07600	Flashing and Sheet Metal	10-25-2013
07920	Caulking and Sealants	10-02-2015
DIVISION 8 - DOORS AND WINDOWS		
08110	Steel Door Frames	10-25-2013
08111	Standard Steel Doors and Frames	03-06-2014
08331	Overhead Coiling Doors	10-25-2013
08710	Door Hardware	10-25-2013
DIVISION 9 - FINISHES		
09260	Gypsum Board	10-25-2013
09900	Painting	10-25-2013
09901S	Protective Coating.	05-09-2015
09901	Protective Coating.	09-30-2015
DIVISION 10 - SPECIALTIES		
10200	Louvers	10-25-2013
10520	Fire Extinguishers	02-29-2008
DIVISION 11 – EQUIPMENT		
11228	Mechanical Surface Aerators	09-06-2013
11237	Vortex Grit Removal Equipment	03-06-2014
11288	Stainless Steel Slide Gates and Weir	04-26-2013
11303	Self Priming Centrifugal Chopper Pumps	11-14-2014
11334	Static Screen	11-14-2014
11370	Bridge Crane and Appurtenances	09-06-2013
11373	Centrifugal Aeration Blowers	09-06-2013
11375	Digester Blower Control Retrofit	12-09-2014
11500	Chlorination Mechanical Mixers	09-06-2013

Doc. No.	Document Title	Doc. Date
DIVISION 12 - FURNISHINGS (NOT USED)		
DIVISION 13 - SPECIAL CONSTRUCTION		
13300	Process Instrumentation and Controls – General Provisions	10-01-2015
13310	SCADA Software Engineering Security and Quality Requirements	12-09-2014
13315	Process Instrumentation and Control – Products	10-01-2015
13325	Control Panels and Panel Mounted Equipment.	12-09-2014
13441	Pump Station Control	12-09-2014
13471	Control Cabinet Enclosures	12-09-2014
13500	Communications Backbone Cabling.	10-01-2015
13510	Communications Horizontal Cabling.	12-09-2014
13600	Control & Instrumentation Cable.	12-09-2014
DIVISION 14 - CONVEYING SYSTEMS (NOT USED)		
DIVISION 15 – MECHANICAL		
15010	Basic Mechanical and Plumbing Requirements	10-25-2013
15050	Basic Mechanical Materials and Methods	09-06-2013
15052	Buried Piping Installation	11-30-2014
15053	Exposed Piping Installation	11-30-2014
15055	Ductile Iron Process Pipe	11-30-2014
15070	Hoses	09-06-2013
15082	Insulation of Piping and Equipment	04-15-2014
15101	Process Valves and Appurtenances	09-06-2013
15106	Electric Motor Operators for Valves and Gates	09-06-2013
15110	Wall Pipes, Floor Pipes and Pipe Sleeves	11-30--2014
15130	Pressure Gauge	06-03-2013
~~15138~~	~~Electric Valve Actuator.~~	~~09-06-2013~~
15140	Pipe Hangers, Supports and Restraints	09-06-2013
15145	Pipe and Equipment Insulation	09-06-2013
15170	Low Voltage Motors	10-15-2012
15190	Mechanical Identification	09-06-2013
15200	Chlorination Control Equipment and Accessories	09-06-2013
15250	Mechanical Insulation	10-25-2013
15255	Metering Pumps and Accessories	09-06-2013
15257	Chemical Storage Tanks.	09-29-2015
15310	Aeration Piping and Fittings	09-06-2013
15360	Disinfection System Piping and Valves	09-06-2013
15430	Plumbing Specialties	10-15-2012
15770	Heat Pump	10-15-2012
15782	Packaged, Outdoor, Heating and Cooling Air-Conditioners	10-25-2013
15870	Power Ventilators	10-25-2013

Doc. No.	Document Title	Doc. Date
15890	Sheet Metal Duct Work	10-25-2013
15910	Duct Accessories	10-25-2013
15990	Testing, Adjusting, Balancing and Commissioning	10-25-2013

DIVISION 16 – ELECTRICAL

16010	Basic Electrical Requirements	09-06-2013
16060	Electrical Demolition	09-06-2013
16111	Conduit, Fittings and Bodies	09-06-2013
16120	600-Volt Building Wire and Cable	09-06-2013
16121	600-Volt Control Cable	09-06-2013
16122	600-Volt Power Cable	09-06-2013
16126	Instrumentation Cable	10-15-2012
16131	Device, Pull and Junction Boxes	09-06-2013
16140	Wiring Devices	09-06-2013
16160	Cabinets and Enclosures	09-06-2013
16161	Panelboards	09-06-2013
16165	Disconnect Switches	09-06-2013
16170	Grounding and Bonding	09-06-2013
16171	Low Voltage Motors	09-06-2013
16175	Low Voltage Variable Frequency Drives	10-25-2013
16195	Electrical Identification	09-06-2013
16402	Underground Duct Banks	09-06-2013
16410	Low Voltage Power Factor Correction Capacitors	10-15-2012
16461	Dry-Type Transformers	09-06-2013
16480	Motor Control Center	09-06-2013
16510	Lighting Fixtures	09-06-2013
16640	**CATHODIC PROTECTION FOR PIPELINES**	**01-01-2011**
16642	**CATHODIC PROTECTION FOR PLANT PIPING**	**01-01-2011**
16670	Lightning Protection System	09-06-2013
16709	**COMMUNICATIONS CONDUIT**	**07-01-2012**
16710	**PULL BOXES**	**07-01-2009**
16733	**MANAGED FIELD HARDENED ETHERNET SWITCH**	**07-01-2012**
16735	**FIBER OPTIC SPLICE ENCLOSURE**	**07-01-2012**
16736	**FIBER DISTRIBUTION UNIT**	**07-01-2009**
16737	**COMMUNICATION SERVICE BOX**	**07-01-2012**
16738	**WIRELESS COMMUNICATION SYSTEM**	**07-01-2009**
16740	**SINGLE MODE FIBER OPTIC COMMUNICATION SYSTEM**	**07-01-2012**
16900	Overcurrent Protective Device Coordination and Arc Flash Study	09-06-2013

END OF DOCUMENT

Document 00410B

BID FORM – PART B

1.0 TOTAL BID PRICE HAS BEEN CALCULATED BY BIDDER, USING THE FOLLOWING COMPONENT PRICES AND PROCESS (PRINT OR TYPE NUMERICAL AMOUNTS):

A. STIPULATED PRICE: $ N/A

(Total Bid Price; minus Base Unit Prices, Extra Unit Prices, Cash Allowances and All Alternates, if any)

B. BASE UNIT PRICE TABLE:

Item No.	Spec Ref.	Base Unit Short Title	Unit	Estimated Quantity	Unit Price (this column controls)	Total in Figures
Keegan's Bayou WWTP						
1	01502	Mobilization	LS	1	$145,000.00(1)	$145,000.00(1)
2	Div. 1 through Div. 16	Improvements to existing Grit Removal System Facilities, in compliance with requirement of contract documents, inclusive of start-up, commissioning and training of City personnel for a fully functional system. The items of work includes but not limited to the following: demolition, dewatering and bypass pumping, construction of a new grit chamber and new epoxy coated flow channels, modifications to existing flow channels, supply and installation of equipment, civil/site work, electrical work, and storm-water pollution prevention control.	LS	1		
3	Div. 1 through Div. 16	Supply and installation of fully functional electrically operated actuators at the existing Clarifiers Influent Gates, including all associated electrical work.	LS	1		

Item No.	Spec Ref.	Base Unit Short Title	Unit	Estimated Quantity	Unit Price (this column controls)	Total in Figures
4	02101	Removal and disposal of settled sludge and debris in the existing Grit Removal System Facility.	TON	300		
5	02260	Trench Safety System	LF	500		
6	Div. 13 Div. 16	Replacement, modifications, and expansion of PLC based control systems, including demolition and removal of replaced and decommissioned systems and system components. Provide PLC control systems, control panel components, field devices, wire & cabling, raceways, testing, commissioning, training, and documentation. Provide network upgrades and replacement user workstation monitors. Trace & identify existing control signal wiring and terminations, verify operation of existing field devices.	LS	1		

Item No.	Spec Ref.	Base Unit Short Title	Unit	Estimated Quantity	Unit Price (this column controls)	Total in Figures
7	Div. 13 13310	Provide SCADA Software Engineering and System Integration services. Verify existing control signals, PLC and manufacturer's equipment software programs, and HMI graphical user interface. Identify existing active control signals for reconnection and abandoned control signal for demolition. Implement plant-wide reassign control network IP address reassignments. Configure replacement PLC systems. Integrate manufacturer's equipment control installations into COH IFIX based remote monitoring and control system. Develop and install PLC software programming and update HMI graphical user interfaces. Debug, test, commission, calibrate, and demonstrate operation of replacement control systems. Train COH operations personnel.	LS	1		
8	Div. 16	Electrical, Power Panels, Conduit support Racks, wiring and conduits associated with Dewatering Building. Work includes replacement of electrical circuits, conduits to the existing pumps.	LS	1		

Item No.	Spec Ref.	Base Unit Short Title	Unit	Estimated Quantity	Unit Price (this column controls)	Total in Figures
9	11375	Provide manufacturer's replacement control retrofits for six (6) existing digester blower systems, incl. new control panels, PLC control systems, touch screen monitors, replacement field devices, wiring, engineering, software programming, testing, start-up, training, and demonstration services	LS	1		
10	03931 07920	Headworks crack repair	LF	625		
Total Keegan's Bayou WWTP				$_____		

Item No.	Spec Ref.	Base Unit Short Title	Unit	Estimated Quantity	Unit Price (this column controls)	Total in Figures
Greenridge WWTP						
11	01502	Mobilization	LS	1	$190,000.00(1)	$190,000.00(1)
12	Div. 1 through Div. 16,	Demolition and Improvements to various existing facilities at this plant, in compliance with requirement of contract documents, inclusive of start-up, commissioning and training of City personnel for a fully functional system. The items of work includes but not limited to the following: Aeration Basins, Blower Building, Digester System, Chlorination and de-chlorination System, Scum Removal System Upgrades, Civil/Site work, such as Dewatering and bypass pumping, Asphalt Concrete removal, and Concrete Roadway Paving, Clarifier Influent Gate Motors, Detention Mitigation, Drainage, Bollards, and Storm Water Pollution Prevention Control measures. Work also includes new electrical equipment, and new circuit/conduits to support new blower and aerator replacements.	LS	1		
13	02101	Removal and disposal of settled sludge and debris.	TON	1,500		
14	02260	Trench Safety System	LF	500		
15	02631	Storm Sewer Outfall, Replacement	LF	300		

Item No.	Spec Ref.	Base Unit Short Title	Unit	Estimated Quantity	Unit Price (this column controls)	Total in Figures
16	Div. 13 Div. 16	Provision of new PLC based control system, including demolition and removal of replaced and decommissioned systems and system components. Provide PLC control systems, control panel, control panel components, field devices, wire & cabling, raceways, testing, commissioning, training, and documentation. Provide network upgrades. Provide modification of existing PLC control system for installation of replacement chlorine neutralizing system.	LS	1		
17	Div. 13 13310	Provide SCADA Software Engineering and System Integration services. Verify existing control signals, PLC and manufacturer's equipment software programs, and HMI graphical user interface. Assign control network IP addresses. Configure new PLC systems. Integrate manufacturer's equipment control installations into COH IFIX based remote monitoring and control system. Develop and install PLC software programming and update HMI graphical user interfaces. Debug, test, commission, calibrate, and demonstrate operation of replacement control systems. Train COH operations personnel.	LS	1		
		Total Greenridge WWTP			**$_____**	

C. EXTRA UNIT PRICE TABLE:

Item No.	Spec Ref.	Base Unit Short Title	Unit	Estimated Quantity	Unit Price (this column controls)	Total in Figures
18	02101	Removal of sludge/settled debris above the base bid amount	TON	500	_____ [$100.00](2)	_____ [$50,000.00](2)
19	02318	Hand Excavation	CY	50	_____ [$100.00](2)	_____ [$5,000.00](2)
20	02318	Machine Excavation	CY	250	_____ [$25.00](2)	_____ [$6,250.00](2)
21	02318	Furnish, Place and Compaction of Select Backfill Material	CY	250	_____ [$10.00](2)	_____ [$2,500.00](2)
22	02321	Cement Stabilized Sand Backfill, complete in place	CY	100	_____ [$50.00](2)	_____ $5,000.00](2)
23	02221	Asphalt Removal	LF	200	_____ [$20.00](2)	_____ [$4,000.00](2)
24	02751	Additional 7" thick Reinforced Concrete Pavement	SY	100	_____ [$45.00](2)	_____ [$4,500.00](2)
25	02775	Additional 4" thick concrete with/without form	SY	100	_____ [$30.00](2)	_____ [$3,000.00](2)
26	02820	Extra Bollards	EA	15	_____ [$650.00](2)	_____ [$9,750.00](2)
27	03211	Reinforcing Steel	LB	5,000	_____ [$1.00](2)	_____ [$5,000.00](2)
28	03310	Class A (4,000 psi) Concrete with or without forms	CY	100	_____ [$200.00](2)	_____ [$20,000.00](2)
29	16111	3/4" PVC coated Rigid Steel Conduit installed above ground	LF	5,000	_____ [$5.40](2)	_____ [$27,000.00](2)
30	16111	1-1/2" PVC coated Rigid Steel Conduit installed above ground	LF	5,000	_____ [$12.80](2)	_____ [$64,000.00](2)
31	16111	1" PVC coated Rigid Steel Conduit installed above ground	LF	6,000	_____ [$9.40](2)	_____ [$56,400.00](2)
32	16111	2" PVC coated Rigid Steel Conduit installed above ground	LF	6,000	_____ [$14.40](2)	_____ [$86,400.00](2)

Item No.	Spec Ref.	Base Unit Short Title	Unit	Estimated Quantity	Unit Price (this column controls)	Total in Figures
33	16111	1" Schedule 40 PVC Conduit installed in underground duct bank	LF	5,000	_____ [$4.20](2)	_____ [$21,000.00](2)
34	16111	2" Schedule 40 PVC Conduit installed in underground duct bank	LF	4,000	_____ [$7.05](2)	_____ [$28,200.00](2)
35	13600 16120	Copper No. 14 AWG Conductor with XHHW-2 insulation, installed in conduit	LF	500	_____ [$0.69](2)	_____ [$345.00](2)
36	16120	Copper No. 12 AWG Conductor with XHHW-2 insulation, installed in conduit	LF	30,000	_____ [$0.85](2)	_____ [$25,500.00](2)
37	16120	Copper No. 10 AWG Conductor with XHHW-2 insulation, installed in conduit	LF	30,000	_____ [$1.18](2)	_____ [$35,400.00](2)
38	16120	Copper No. 8 AWG Conductor with XHHW-2 insulation, installed in conduit	LF	15,000	_____ [$1.78](2)	_____ [$26,700.00](2)
39	16120	Copper No. 2 AWG Conductor with XHHW-2 insulation, installed in conduit	LF	2,000	_____ [$3.50](2)	_____ [$7,000.00](2)
40	16120	Copper No. 1/0 Conductor with XHHW-2 insulation, installed in conduit	LF	500	_____ [$5.60](2)	_____ [$2,800.00](2)
41	16120	Copper No. 3/0 Conductor with XHHW-2 insulation, installed in conduit	LF	500	_____ [$9.90](2)	_____ [$4,950.00](2)
42	16126	2/C or 3/C, #16 AWG twisted shielded instrument cable, installed in conduit	LF	1,000	_____ [$1.40](2)	_____ [$1,400.00](2)
43	16402	Duct bank Trenching, Rebar, concrete encasement, and backfill for a duct bank where the top of the conduit is 36" below grade. The cross sectional area of the concrete encasement shall be four square feet.	LF	300	_____ [$27.00](2)	_____ [$8,100.00](2)

Item No.	Spec Ref.	Base Unit Short Title	Unit	Estimated Quantity	Unit Price (this column controls)	Total in Figures
44	Div 13	Additional Programming for SCADA Integration as Requested by Owner	Man-Hours	40	_____ [$120.00](2)	_____ [$4,800.00](2)
45	13300 13315	Fiber Optic Cable: Multi-mode pair, including provisions for new liner, terminations and testing, installed in existing raceway.	LF	1,000	_____ [$5.00](2)	_____ [$5,000.00](2)
46	13300 13315	Fiber Optic Patch Cable Assemblies: Preassembled multi-mode fiber optic duplex patch cable, 10' nominal length, complete with MT-RJ and/or ST terminations as required.	EA	30	_____ [$50.00](2)	_____ [$1,500.00](2)
47	13300 13315	Control & Instrumentation Cable: 12 AWG stranded, 2 conductors, jacketed, installed, tested, tagged, and terminated.	LF	27,500	_____ [$7.00](2)	_____ [$192,500.00](2)
48	13300 13315	Control & Instrumentation Cable: 18 AWG stranded, 2 conductors, shielded and jacketed, installed, tested, tagged, and terminated.	LF	25,000	_____ [$4.00](2)	_____ [$100,000.00](2)
49	13300 13315	Ethernet Cable: 4 pair Category 6, installed including terminations & testing.	LF	5,500	_____ [$3.50](2)	_____ [$19,250.00](2)
50	13300 13315	Programmable Logic Controller: Siemens S7-300 Series Modular Type, including backplane and module rack, central processor module, memory, set-up and configuration.	EA	3	_____ [$1,800.00](2)	_____ [$5,400.00](2)
51	13300 13315	Power Supply: 120 VAC input, 24 VDC output, 5 amp nominal.	EA	7	_____ [$250.00](2)	_____ [$1,750.00](2)

`Item No.	Spec Ref.	Base Unit Short Title	Unit	Estimated Quantity	Unit Price (this column controls)	Total in Figures
52	13300 13315	Input/Output Module: Modular digital type for Siemens S7-300 programmable logic controllers, 16 channel universally scalable, channel-specifically configurable for input or output duty, including installation, termination, and configuration.	EA	20	_____ [$1,000.00](2)	_____ [$20,000.00](2)
53	13300 13315	Input/Output Module: Modular analog input type for Siemens S7-300 programmable logic controllers, 8 channel universal type, including installation, termination, and configuration.	EA	10	_____ [$1,850.00](2)	_____ [$18,500.00](2)
54	13300 13315	Input/Output Module: Modular analog output type for Siemens S7-300 programmable logic controllers, 8 channel universal type, including installation, termination, and configuration.	EA	5	_____ [$2,000.00](2)	_____ [$10,000.00](2)
55	13300 13315	Communications Module: Modular Profibus DP or FMS for Siemens S7-300 programmable logic controller, including installation and configuration.	EA	6	_____ [$1,500](2)	_____ [$9,000.00](2)
56	13300 13315	Software Programming Services: Programming services for Siemens S7-300 series programmable logic controller and or graphical user interface	Man Hours	250	_____ [$125.00](2)	_____ [$31,250.00](2)
57	13300 13315	Communications Module: Modular Ethernet for Siemens S7-300 programmable logic controller, including installation and configuration.	EA	3	_____ [$1,500.00](2)	_____ [$4,500.00](2)

`Item No.	Spec Ref.	Base Unit Short Title	Unit	Estimated Quantity	Unit Price (this column controls)	Total in Figures
58	13300 13315	Control Voltage Relay: DPDT (double pole double throw) motor rated contacts, plug-in type continuous duty, 24 or 120 VAC, including mounting base, installation, and termination.	EA	125	_____ [$65.00](2)	_____ [$8,125.00](2)
59	13300 13315	Ladder Tray W/ Support	LF	350	_____ [$150.00](2)	_____ [$52,500.00](2)
60	13300 13315	Field Technician Services: Qualified controls & instrumentation technician field services as directed	Man Hours	700	_____ [$75.00](2)	_____ [$52,500.00](2)
61	Div. 02	Extra 6" Ductile Iron Pipe including excavation and restoration.	LF	50	_____ [$100.00](2)	_____ [$5,000.00](2)
62	Div. 16	Install new 2" underground conduits from Clarifier Building to new Grit Chambers including underground piping & utility location and horizontal boring.	LF	500	_____ [$40.00](2)	_____ [$20,000.00](2)
63	Div. 16	Provide additional days of portable electric power generation to main switchgear at Greenridge WWTP including fuel costs.	Days	7	_____ [$2500.00](2)	_____ [$17,500.00](2)
64	Div. 02 00901	Protective Coating Concrete Surface Repair Preparation ½ inch or less.	SF	100	_____ [$40.00](2)	_____ [$4,000.00](2)
65	Div. 02 00901	Protective Coating Concrete Surface Repair Preparation greater than ½ inch.	SF	100	_____ [$60.00](2)	_____ [$6,000.00](2)
TOTAL EXTRA UNIT PRICES						$_____

REST OF PAGE INTENTIONALLY LEFT BLANK

D. CASH ALLOWANCE TABLE:

Item No.	Primary Spec Ref.	Cash Allowance Short Title	Cash Allowance in figures (1)
66	01110	City of Houston Building Permit – Keegan's Bayou WWTP and Greenridge WWTP Improvements	$35,000.00
67	01110	Street Cut Permit for Greenridge WWTP – Cash allowance for the actual cost of the permit fees associated with the Street Cut permit required by the City of Houston.	$2,000.00
68	01110	Utility Reimbursement – Cash allowance for the actual cost of a temporary utility connection, installation and overhead wire.	$5,000.00
TOTAL CASH ALLOWANCES			$42,000.00

REST OF PAGE INTENTIONALLY LEFT BLANK

E. ALTERNATES TABLE: - N/A

REST OF PAGE INTENTIONALLY LEFT BLANK

F. TOTAL BID PRICE: **$**_____
(Add Totals for Stipulated Price, Base Unit Price, Extra Unit Price, Cash Allowance, and All Alternates, if any)

2.0 SIGNATURES: By signing this Document, I agree that I have received and reviewed all Addenda and considered all costs associated with the Addenda in calculating the Total Bid Price.

Bidder: _____
(Print or type full name of your proprietorship, partnership, corporation, or joint venture.*)

**By: _____
Signature Date

Name: _____
(Print or type name) Title

Address: _____
(Mailing)

_____
(Street, if different)

Telephone and Fax Number: _____
(Print or type numbers)

* If Bid is a joint venture, add additional Bid Form signature sheets for each member of the joint venture.

** Bidder certifies that the only person or parties interested in this offer as principals are those named above. Bidder has not directly or indirectly entered into any agreement, participated in any collusion, or otherwise taken any action in restraint of free competitive bidding.

Note: This document constitutes a government record, as defined by § 37.01 of the Texas Penal Code. Submission of a false government record is punishable as provided in § 37.10 of the Texas Penal Code.

Footnotes for Tables B through E:
(1) Fixed Unit Price determined prior to Bid. Cannot be adjusted by the Bidder.
(2) Minimum Bid Price determined prior to Bid. Can be increased by the Bidder, but not decreased, by crossing out the Minimum and inserting revised price on the line above. **Cannot** be decreased by the Bidder.
(3) Maximum Bid Price determined prior to Bid. Can be decreased by the BIdder, but not increased, by crossing out the Maximum and inserting revised price on the line above. A Bid that increases the Maximum Bid Price may be found non-conforming and non-responsive. **Cannot** be increased by the Bidder.
(4) Fixed Range Bid Price determined prior to Bid. Unit Price can be adjusted by Bidder to any amount within the range defined by crossing out prices noted and noting revised price on the line above.

Section 03931

CONCRETE REPAIR AND REHABILITATION

PART 1 - GENERAL

1.01 SECTION INCLUDES

A. Repair of concrete cracks, holes, and surface defects, and repair of deteriorated concrete surfaces.

B. Installation of embedded items into existing concrete.

1.02 UNIT PRICES

A. Measurement for repair materials is on a linear foot (LF) per length of crack. Payment includes work performed on these structures in accordance with related sections included in the Contract Documents.

B. Measurement for extra removal of deteriorated concrete and placement of repair mortar is on a cubic-foot basis. Measurement for other repair materials is as defined in the appropriate related sections. Payment includes associated work performed in accordance with related sections included in the Contract Documents.

C. Refer to Section 01270 – Measurement and Payment for unit price procedures.

1.03 REFERENCE STANDARDS

A. ASTM C 109 – Standard Test Method for Compressive Strength of Hydraulic Cement Mortars (Using 2-in. or 50-mm Cube Specimens).

B. ASTM C 881 – Standard Specification for Epoxy-Resin-Base Bonding Systems for Concrete.

C. ASTM C 882 – Standard Test Method for Bond Strength of Epoxy-Resin Systems Used with Concrete by Slant Shear.

1.04 SUBMITTALS

A. Under provisions of Section 01330 – Submittal Procedures, submit manufacturer's product information, installation instructions and recommendations, and certification of compliance with required properties for all repair materials.

1.05 REPAIR SCOPE

A. Patch and fill openings in existing concrete indicated to be patched or filled.

B. Patch, fill holes in, and otherwise repair damage to concrete and concrete surfaces resulting from removal of penetrating pipes and other embedded items, from installation of pipes or other items embedded in or passed through concrete, and from other construction activities.

C. Crack Repair: Repair the full length of cracks in concrete members in new structures, and in existing structures as indicated on Drawings.

D. Deteriorated Concrete:

1. Repair interior concrete surfaces showing signs of deterioration in existing structures as indicated on Drawings.

2. The level of deterioration of the concrete varies within each of the indicated structures. For bidding purposes, average depth of deteriorated concrete walls and undersides of top slabs is assumed to be one inch. Repair for the portion exceeding one inch in depth, as measured from the existing wall surface, will be paid as extra work as defined above.

E. Make other repairs to existing structures as indicated on Drawings.

1.06 QUALITY ASSURANCE

A. Field Tests of Cement-based Grouts:

1. Compression test specimens will be prepared during construction by the City Engineer, or the City's Authorized Representative, from the first placement of each type of mortar or grout, and at intervals thereafter as determined by the City Engineer, to ensure continued compliance with these specifications.

2. Specimen preparation and compression testing for repair mortar and nonshrink grout will be performed as specified in ASTM C 109. A set of three specimens will be made for testing at 7 days, 28 days, and additional testing as appropriate.

3. Material failing to meet Contract requirements is subject to removal, and replacement with new material meeting requirements, at no additional cost to the City.

4. Cost of laboratory tests on mortar and grout will be borne by the City, except Contractor shall pay for tests failed, and additional testing and investigation work performed because of work not meeting Contract requirements.

5. Contractor shall supply all materials necessary for fabricating test specimens and assist the City Engineer in obtaining specimens for testing.

B. Repair concrete shall be tested as required in Section 03310 – Structural Concrete.

C. Epoxy grout shall be tested as required in Section 03600 – Structural Grout.

D. Chemical Grout:

1. Repair interior concrete surfaces showing signs of deterioration in existing structures as indicated on Drawings.

2. The level of deterioration of the concrete varies within each of the indicated structures. For bidding purposes, average depth of deteriorated concrete walls and undersides of top slabs is assumed to be one inch. Repair for the portion exceeding one inch in depth, as measured from the existing wall surface, will be paid as extra work as defined above.

E. Construction Tolerances: As specified in Section 03100 – Concrete Formwork, and Section 03350 – Concrete Finishing, except as otherwise indicated.

F. Curing Conditions for Water Reactive Grout:

1. Cracks/Joints must be wet or the materials will not properly react and cure.

2. Do not apply if the air temperatures are lower than 40 degrees Fahrenheit (4 degrees Celsius) or if temperatures are expected to drop below 40 degrees Fahrenheit (4 degrees Celsius) within 24 hours of application; or higher that 120 degrees Fahrenheit (48 degrees Celsius).

3. Cure times are affected by water temperature. Lower temperatures and/or lack of water can extend or prevent curing.

F.

1.07 WEATHER LIMITATIONS

A. Halt work when weather conditions detrimentally affect the quality of patching or bonding concrete. Apply epoxy resin materials only when the contact surfaces are completely dry and if the atmospheric and surface temperature ranges are suitable for the specified epoxy material. Follow manufacturer's instructions for weather conditions and temperature ranges.

PART 2 PRODUCTS

2.01 REPAIR MORTAR

A. Repair Mortar: Prepackaged polymer-modified cement-based product specifically formulated for repair of surface defects in concrete, having the following properties:

Physical Property	Value	ASTM Standard
Compressive Strength (minimum)		C 109
1 day	2000 psi	
28 days	6000 psi	
Bond Strength (minimum)		C 882 (modified)
1 day	1200 psi	
7 days	2000 psi	

B. Manufacturer and Product: "Emaco" by BASF Construction Chemicals (formerly Master Builders), "Euco" by Euclid Chemical Company, "Sikacem" by Sika Corporation, "Five Star Structural Concrete" by Five Star Products, Inc., or equal. Where the manufacturer offers products in formulations intended for specific

application conditions such as overhead and shotcrete application, use the formulation recommended by the manufacturer for the condition required.

C. Minimum Repair Thickness: 0.50 inch.

2.02 NONSHRINK GROUT

A. Nonshrink Grout: Comply with requirements of Section 03600 – Structural Grout.

2.03 CONCRETE MATERIALS

A. Cement: Type II Portland cement, unless indicated otherwise. Where repairs are made on wall surfaces exposed to view and above normal water surface elevation, blend white Portland cement with Type II cement as needed to match the color of adjacent existing concrete surface.

B. Repair Concrete: Class A (4000 psi) concrete with one-inch maximum coarse aggregate, complying with Section 03310 – Structural Concrete; minimum repair thickness, 2 inches.

C. Cement Grout: Comply with Section 03600 – Structural Grout; minimum repair thickness, one inch.

D. Curing Materials, Bonding Agents, and Other Miscellaneous Materials: Comply with Section 03310 – Structural Concrete and Section 03390 – Concrete Curing.

2.04 AGGREGATE

A. Aggregate for Extending Repair Mortar and Nonshrink Grout Products: 3/8 inch clean washed gravel or crushed stone complying with Section 03390 – Concrete Curing.

2.05 CHEMICAL GROUT

A. Chemical Grout: Hydrophobic urethane or polyurethane material of low viscosity suitable for pumped injection into cracks, which reacts with water to form a closed-cell foam material that completely fills and seals all cracks against leakage. Cured material shall remain elastic and maintain an expansive pressure through repeated wet-dry cycles.

B. Manufacturer and Product: "Avanti International AV-202, AV-315," "SikaFix" by Sika Corporation, or approved equal. Use different formulations in the same family of materials, accelerators, and other materials necessary for installation where recommended by the manufacturer for specific application conditions.

C. Reacted and cured chemical grout shall be resistant to organic solvents, mild acids, alkali, and micro-organisms. Cured material shall be approved for use with potable water by the appropriate federal, state, or local government agency.

2.06 EPOXY PRODUCTS

A. Epoxy Grout: Comply with Section 03600 – Structural Grout, modified as specified herein.

B. Epoxy for Crack Injection: ASTM C 881, Type IV; low viscosity, moisture-insensitive material specifically formulated for that use; 2500 psi minimum bond strength when tested in accordance with ASTM C 882 at 14 days, moist cured.

2.07 SEALANT

A. Sealant: 2-part polyurethane.

2.08 FORMWORK

A. Formwork, Where Needed: Comply with Section 03100 – Concrete Formwork.

2.09 REINFORCEMENT

A. Reinforcement, Where Required: Comply with Section 03211 – Reinforcing Steel.

2.10 RESILIENT WATERSTOP

A. Resilient Waterstop.

PART 3 EXECUTION

3.01 PREPARATION AND CURING

A. Where repairs are made on wall surfaces exposed to view and above normal water surface elevation, installed repair material shall match adjacent concrete surface in color.

B. Surface Preparation:

1. Clean mineral deposits (if present) from the crack face. This should help the applicator inspect the cracks, to understand crack location and size. Precise crack location is required to determine location of the holes for injectors. Crack size determination is required to decide injector spacing.

1.

2. Clean entire area to be repaired of laitance, foreign material, and loose or deteriorated concrete by chipping, hydroblasting, or sandblasting; further roughen surfaces as specified herein. Where nonshrink grout or repair mortar is used, perform any additional surface preparation steps recommended by the manufacturer.

3. Where cementitious repair materials are used, maintain surfaces to be repaired in a saturated surface dry condition and prevent concrete from drying until repair operations are completed. Re-wet surfaces to be repaired by water spray on at least a daily basis. Remove standing water in areas to be repaired prior to placement of repair material. Provide means to remove excess water from the structure.

4. Where repair material manufacturer recommends use of an epoxy bonding agent, follow recommendations of both the repair material and epoxy bonding agent manufacturers.

C. Fully consolidate repair material, completely filling all portions of areas to be filled.

D. Bring repair surfaces into alignment with adjacent existing surfaces to provide uniform, even surfaces. Unless indicated otherwise, repair surfaces shall match adjacent existing surfaces in texture and receive coatings or surface treatments provided for adjacent existing surfaces.

E. Curing:

1. Cure repair mortar and nonshrink grout according to manufacturer's recommendations, except that minimum cure period shall be 3 days.

2. Cure other materials in accordance with Section 03390 – Concrete Curing.

3. If manufacturer recommends use of a curing compound, use no material that would interfere with the bond of any coating or adhesive required to be applied to the surface.

3.02 TREATMENT OF SURFACE DEFECTS

A. Definition - Surface Defects: Depressions in concrete surfaces not extending all the way through a member, caused by physical damage, unrepaired rock pockets created during original placement, spalling due to corroded reinforcing steel or other embeds, or removal of embedded items or intersecting concrete members.

B. Preparation:

1. Remove loose, damaged concrete by chipping to sound material.

2. Where existing reinforcing bars are exposed, remove concrete at least one inch deep all around the exposed bars. If the existing bars are cut through, cracked, or cross-sectional area is reduced by more than 25 percent, notify the City Engineer immediately.

C. Repair Material:

1. Use only repair mortar to repair surface defects in members normally in contact with water or soil, and defects in interior surfaces of structures that are intended to contain water.

2. Repair of other surface defects may be by application of repair mortar, repair concrete, or cement grout, as appropriate.

3.03 PATCHING OF HOLES IN CONCRETE

A. General:

1. Definition - Holes: For the purposes of this section, holes are defined as penetrations completely through a concrete member, with interior surfaces

approximately perpendicular to the surface of the existing member. Chip interior surface areas that are inclined and do not meet this criterion as necessary to meet this requirement.

2. Perimeter of holes at the surface shall form a regular shape composed of curved or straight-line segments. Provide at least the minimum placement depth specified for the material used at all locations. Score existing concrete by sawcutting and chip as needed to meet this requirement.

3. Roughen the interior surface of holes less than 12 inches in diameter to at least 0.125-inch amplitude. Roughen larger holes to at least 0.25-inch amplitude.

4. At holes not filled with repair mortar or nonshrink grout, and where otherwise recommended by the repair material manufacturer, coat existing surfaces to be repaired with epoxy bonding agent.

5. Where a surface of a member is exposed to view and the repair material cannot be adjusted to match the color of the existing concrete, hold back the repair material 2 inches from the surface. Fill the remaining 2 inches with color-adjusted cement grout. Roughen the surface of the repair material when placed to improve bond with the cement grout.

B. Patching Small Holes:

1. Fill holes less than 12 inches in least dimension and extending completely through concrete members with repair mortar or nonshrink grout.

2. Fill holes in members normally in contact with water or soil with Class I nonshrink grout in accordance with Section 03600 – Structural Grout.

C. Patching Large Holes:

1. Fill holes larger than 12 inches in least dimension with repair concrete, repair mortar or nonshrink grout.

2. Provide large holes normally in contact with water or soil and not filled with Class I nonshrink grout with resilient waterstop placed in a groove approximately 0.25 inch deep ground into the interior edge of the hole at the center of the wall providing a smooth surface in which to place the resilient waterstop. Alternatively, bond bentonite waterstop to the surface using an epoxy grout that completely fills all voids and irregularities beneath the waterstop material.

3. Provide reinforcing steel in layers matching existing reinforcement locations, except provide concrete cover required by the Contract Documents for the applicable service condition.

4. For holes smaller than 48 inches, reinforcement shall be at least #5 bars on 12-inch centers in each layer required. At all holes larger than 30 inches, drill and grout the reinforcement into the existing concrete.

5. For holes larger than 48 inches, see the drawings for reinforcement details.

3.04 PATCHING OF LINED HOLES

A. These provisions apply to openings which have embedded material over all or a portion of the inside edge. Requirements for repairing holes in concrete specified above shall apply as modified herein. The City Engineer will determine when the embedded material is allowed to remain.

B. Where embedded material is allowed to remain, trim it back a minimum of 2 inches from the concrete surface. Roughen or abrade the embedded material to promote good bonding to the repair material. Completely remove any substance that interferes with good bonding.

C. Completely remove embedded items not securely and permanently anchored in the concrete.

D. Completely remove embedded items larger than 12 inches in least dimension unless composed of a metal to which reinforcing steel can be welded. Where reinforcement is required, weld it to the embedded metal.

E. The following additional requirements apply to concrete in contact with water or soil.

1. Fill lined openings less than 4 inches in least dimension with epoxy grout.

2. Coat lined openings greater than 4 inches but less than 12 inches in least dimension with an epoxy bonding agent prior to filling with Class I nonshrink grout.

3. Coat lined openings greater than 12 inches in least dimension with an epoxy bonding agent and bond bentonite waterstop to the interior of the opening prior to filling with approved repair material.

3.05 INSTALLATION OF PIPES AND FRAMES

A. The following applies to installation of permanent pipes and frames in openings cut into existing concrete members.

B. Cut opening to a size that is a minimum of one inch and a maximum of 3 inches larger than the outside edge of the embedded item. At openings with sharp corners, take care not to sawcut beyond the opening so as to damage existing reinforcing bars. At openings that are greater than 24 inches in least dimension, chip a keyway into the center of the wall. Keyway shall be at least 1.5 inches in depth and from 3 inches to 1/3 the member thickness in width. All surfaces except at the keyway shall be perpendicular to the member surface as specified herein for patching holes.

C. Provide embedded items with a flange or other positive means of anchorage to repaired members. At members in contact with soil or water, provide continuous waterstop flanges around embeds. Where concrete pipe will be embedded, provide resilient waterstop around pipe at wall centerline.

D. Roughen the interior surface of openings to at least 1/4-inch amplitude. Sandblast the embed surface to be in contact with concrete clean to promote good bonding to the repair material.

E. Fill the space between the frame and the existing concrete with Class I nonshrink grout.

F. Where surface of a member is exposed to view and the repair material cannot be adjusted to match the color of the existing material, hold back the repair material 2 inches from the surface. Fill the remaining 2 inches with color-adjusted cement grout.

3.06 NON-FIXED INSTALLATION OF PIPES

A. The following applies to installation through existing concrete of piping to be sealed with adjustable linked seals, resilient connectors, or packing and sealant. When more appropriate, the City Engineer may require installation of a sleeve instead of the core-drilled hole specified herein.

B. Size core-drilled opening to permit installation of the required seal; locate to minimize cutting of existing reinforcing steel.

C. Where linked or resilient seals are to be installed, coat the interior surface of the opening with epoxy at least 1/8 inch thick for a smooth and even surface promoting a good seal.

D. Where packing and sealant are required, seal exposed reinforcing bars with at least a 1/8-inch thick layer of epoxy extending 1/2 inch beyond the bars on all sides. Prepare the surface of the cut concrete and the pipe as recommended by the sealant manufacturer.

3.07 GENERAL CRACK REPAIR

A. Repair cracks identified by the City Engineer as caused by shrinkage or thermal movement by injection with chemical grout as specified herein.

B. Repair cracks not caused by shrinkage or thermal movement by epoxy injection or as otherwise directed by the City Engineer.

3.08 CHEMICAL GROUT CRACK REPAIR

A. Inject chemical grout into all cracks as directed by the City Engineer in those structures included in the scope of work listed herein in accordance with the chemical grout manufacturer's installation instructions and recommendations.

B. Location of Injection Ports: Locate injection ports as recommended by the chemical grout manufacturer and as needed to insure complete penetration of the joint or crack with the grout. Spacing of injection ports shall not exceed 2 feet.

C. Drilling Ports: Drill holes for injection ports to the depth needed for proper distribution of the chemical grout. Take care to not damage any reinforcing steel.

D. Port preparation: Clean holes for injection ports of all debris and fit with an injection fitting as provided by the manufacturer of the chemical grout, or equal. Install injection fittings in accordance with manufacturer's instructions; allow fittings to remain in place until chemical grout injection work is complete in that area. Install caps or valves at injection ports to prevent back flow of uncured chemical grout after it has been injected.

E. Chemical Grout Injection:

1. Follow instructions and recommendations of the chemical grout manufacturer and its representatives for chemical grout mixing and injection procedures.

2. Seal cracks at the surface where needed to assure complete penetration of injected chemical grout and prevent loss of material.

3. Prior to chemical grout injection, inject water into ports to provide water for the reaction process, flush out foreign matter and verify continuity between adjacent ports. Inject water into each port until it begins to flow from an adjacent or nearby port.

4. If the water injection procedure indicates the potential presence of voids within members or behind members resting against soil, notify the City Engineer immediately.

5. Beginning at the lowest injection port, inject chemical grout until the grout begins to flow from an adjacent or nearby port. Repeat the process until the crack is completely filled. In general, port-to-port travel of the injection process will be from low to high in a continuous operation.

6. If port-to-port continuity does not occur at locations where continuity was verified through water injection, mark location and notify the City Engineer.

7. Avoid sudden application of high pressure during the injection process.

8. After completion of the grouting operation, remove all ports and surface sealing materials leaving an undamaged surface.

3.09 EPOXY CRACK REPAIR

A. Inject epoxy into all cracks in damaged concrete as indicated by the City Engineer in structures included in the scope of work listed herein. Follow installation instructions and recommendations of the epoxy manufacturer.

B. Inject cracks with sufficient pressure to ensure full penetration of epoxy but without causing further damage.

C. Location, drilling, and preparation of ports for injection: As specified for chemical grout herein.

D. Epoxy Injection:

1. Follow instructions of the epoxy manufacturer and its representatives for all mixing and injection procedures.

2. Seal all cracks at the surface where needed to provide for complete penetration of the injected epoxy and to prevent loss of material.

3. Beginning at the lowest injection port, inject the epoxy until it begins to flow from an adjacent or nearby port. Repeat the process until the crack is completely filled.

4. If port-to-port continuity does not occur, mark the location and notify the City Engineer.

5. Avoid sudden application of high pressure during the injection process.

6. After completion of injection operations, remove all ports and surface sealing materials to leave an undamaged surface.

3.10 REPAIR OF DETERIORATED CONCRETE

A. These provisions pertain to concrete damaged by abrasion, chemical attack, or corrosion of reinforcing steel. The only material acceptable for surface repair is repair mortar as specified herein. Where the repaired surface is to be subsequently covered with a PVC liner or other protective material, coordinate finishing details with the liner material manufacturer.

B. Surface Preparation:

1. Remove loose, broken, softened, and acid-contaminated concrete to sound, uncontaminated concrete.

2. Notify the City Engineer when removal of deteriorated concrete is complete. Schedule two weeks for the City Engineer to inspect the surface, perform testing for acid contamination, determine if additional concrete must be removed, and to develop any special repair details that may be needed. Should it be determined that additional concrete must be removed to reach sound, uncontaminated material, schedule another two-week period for further evaluation after completion of the additional removal.

3. Follow repair mortar manufacturer's instructions for additional surface preparation.

C. Repair Mortar Placement:

1. Follow manufacturer's recommendations for mixing and placement of repair mortar. After the initial mixing of the repair mortar, do not add additional water to change the consistency should the mix begin to stiffen.

2. Place repair mortar to the minimum thickness recommended by manufacturer but not less than 1/2 inch. Should there be areas where less than the minimum repair mortar depth of concrete is removed, the Contractor may remove additional concrete to attain the minimum repair

mortar thickness or may place repair mortar so as to increase the original thickness of the member. In any case, add repair mortar so that minimum cover over existing reinforcing steel is 2 inches. Do not place repair mortar so as to create locally raised areas. Where there is a transition with wall surfaces that are not in need of repair, do not feather the repair mortar at the transition. Sawcut a score line to not less than the minimum repair mortar depth and chip concrete out to it to form the transition. Take care not to cut or otherwise damage reinforcing steel.

3. Finish repair mortar in an even, uniform plane to restore the member to its original surface. Out-of-plane tolerance: No localized depressions or projections; 0.25-inch maximum gap between repair mortar surface and a 10-foot straight edge in any orientation at any location.

D. Finishing:

1. Apply a smooth magnesium float finish to repair mortar.

2. When completed: No sharp edges. Exterior corners, such as at penetrations: One-inch radius. Interior corners: Square, except 2-inch repair mortar fillet at corners to receive PVC lining.

3.11 DRILLING HOLES FOR INJECTORS

A. Do NOT drill directly into a crack unless concrete is less than 6 inches (15 cm) thick, or if offset drilling is not possible.

B. Injection Test Holes: Drill one or two injection holes on the right or left side of the crack. These first injection holes are test holes to determine which side of the crack should be sealed first and how far materials will travel along the crack. Only the water pump should be charged and ready to pump for test holes. If something goes wrong during test hole pumping, it is very easy to clean a water pump.

C. **Do not fill the material pump, or open pails of grout, until AFTER the test hole pumping**.

D. For a vertical wall, always begin drilling at the lowest point of a crack and work up. Drill the first injection hole at the lowest point on the crack possible. Drill the second injection hole on the same side of the crack, approximately 12 inches (30cm) up the crack from the first injection hole. Remember that injection holes are drilled at a 45-degree angle to intersect the crack halfway into the concrete.

END OF SECTION

Section 09901S

PROTECTIVE COATINGS

The following supplements modify Section 09901 – Protective Coating. Where a portion of the Specification is modified or deleted by this Supplementary Specification, the unaltered portions of the Specification shall remain in effect.

2.03 SUBMERGED AND SEVERE SERVICE COATINGS SYSTEMS: Add the following Paragraph 2.03 J and K:

J. System 108 - 100% Solids, Isocyanate-Free, Solvent-Free, High Build Epoxy Coating for Wastewater applications only, to be spray applied in one or more coats to all interior surfaces of exposed concrete above the spring line or as otherwise detailed.

1. Product Characteristics:
   a. Product: 100% solids, solvent-free high-build epoxy system
   b. Product Type: amine cured epoxy
   c. VOC Content (ASTM D3960): 0%
   d. Compressive Strength, psi (ASTM D695): 10,500 (minimum)
   e. Tensile Strength, psi (ASTM D638): 4,500 (minimum)
   f. Flexural Strength, psi (ASTM D790): 7,500 (minimum)
   g. Adhesion to Concrete, psi/mode of failure (ASTM D4541/7234): 350 psi (minimum)/with substrate (concrete) failure
   h. Chemical Resistance, pH$\geq$0.5 (ASTM G20): 60% Sulfuric Acid
2. In all cases the coating product(s) shall be applied to a minimum dry film thickness of 80 mils to surface profiles of CSP-4 to CSP-5 or 125 mils minimum DFT to surface profiles of CSP-6 or greater.
3. For resistance to ground water head pressure the coating shall be a minimum of 80 mils for depths up to 15 feet and 125 mils minimum for depths from 15 to 80 feet. For depths greater than 80 feet consult the coating manufacturer for recommendations.
4. Subsequent top-coating or additional coats of the coating product(s) shall occur within the product recoat window or 24 hours whichever is less. Additional surface preparation procedures will be required if this recoat window is exceeded.

K. System 109 - 100% Solids, Solvent-Free, Multi-Layered Polymer Lining System (Polyurea and Polyurethane) for Wastewater applications only, to be spray applied in three layers to all interior surfaces of exposed concrete above the spring line or as otherwise detailed.

3. Product Characteristics:
   a. Product: 100% solids, solvent-free, polyuria (two layers) and polyurethane (one layer) system
   b. Product Type: Self-curing polymer lining
   c. VOC Content (ASTM D3960): 0%

d. Tensile Strength, psi (ASTM D412): 2,400 (minimum)
e. . Elongation % (ASTM D412): 200 (minimum)
f. Tear Strength, pli (ASTM D624): 300 (minimum)
g. Shore D Hardness, (ASTM 2240): 45 (minimum)
h. Adhesion to Concrete, psi/mode of failure (ASTM D4541/7234): 350 psi (minimum)/with substrate (concrete) failure
i. Chemical Resistance, pH≥0.5 (ASTM G20): 30% Sulfuric Acid

4. In all cases the coating product(s) shall be applied to a minimum thickness of 500 mils total.

3. For resistance to ground water head pressure the coating shall be a minimum of 500 mils thick for depths up to 32 feet. For depths greater than 32 feet consult the coating manufacturer for recommendations.

4. Subsequent top-coating or additional coats of the coating product(s) shall occur within the product recoat window or 24 hours whichever is less. Additional surface preparation procedures will be required if this recoat window is exceeded.

END OF SUPPLEMENT

Approved by:

Ebi Nassiri

TH Ebi Nassiri, P.E.
Assistant Director,
Wastewater Engineering Section,
Engineering and Construction Division

5/19/15
Date

SECTION 13300

PROCESS INSTRUMENTATION AND CONTROLS – GENERAL PROVISIONS

PART 1: GENERAL

1.01 MEASUREMENT AND PAYMENT

A. No separate payment will be made for work performed under this Section.
B. Include payment in lump sum bid for work of which this is a component part.

1.02 SCOPE OF WORK

A. Keegan's Bayou WWTP: Controls and Instrumentation work includes all work shown on the drawings and specified herein, including control points identified in Attachment "A" of this section, but not limited to following:

1. **Replacement of existing RTU (Square D) located in existing Local Control Panel with the Simatic 315 model, for the following location:**
   - **Clarifier Building, Panel LPC400 – Replace existing PLC RTU0250D. Retain and reuse the existing enclosure. Remove abandoned wiring and conduits and as indicated.**
   - **Blower Building #2, Panel LPC700/800 - Replace existing RTU0250G. Retain and reuse the existing enclosure. Remove abandoned wiring and conduits and as indicated.**
   - **Sludge Dewatering Building, Panel LPC900A – Demolish existing PLC RTU-0250H and selected panel components as indicated. Retain and reuse the existing enclosure and selected components as indicated. Remove abandoned wiring and conduits and as indicated.**
   - **Sludge Dewatering Building, Panel LPC900B – Demolish existing control panel enclosure and all associated wiring, conduits, etc.**
   - **Sludge Dewatering Building, Panel LPC900B – Replace existing RTU0250I. Retain and reuse the existing enclosure.**
2. **Identification and verification of existing I/O signals and field devices for PLC controllers to be replaced under Scope Item #1 above, including, but not limited to signal tracing, verification of field device functionality, identification of wiring and terminations.**
3. **Install and integrate new manufacturer equipment control panels LPC200A and LPC200B furnished by Division 11 New Grit System. Provide additional field devices as indicated.**

4. **Coordinate and integrate manufacturer's equipment control system retrofits for six (6) blower control panels by Division 11 in Blower Building #2.**
5. **Extend existing facility fiber optic network loop from Administration Building to the new grit removal system.**
6. **Replace/upgrade existing network communications switches as indicated.**
7. **Provide new monitoring automation for (4) new motor operated lift gates at the existing clarifier influent flow splitter box - MV401, MV402, MV403, MV404.**
8. **Provide new monitoring automation for (4) new motor operated lift gates at the new grit chambers - MV1, MV2, MV3, MV4.**
9. **Demolish unused and/or abandoned control wiring and conduits or as indicated.**
10. **Replace selected field devices as indicated.**
11. **Demolition obsolete PLC control points and field devices as discovered and/or as indicated.**
12. **Provide for new operator workstation monitors at the administration building and the solids building – two (2) monitors at each building.**
13. **Replace and relocate existing electromagnetic flowmeters (polymer to Belt Filter Press BFP-1, BFP-2, BFP-3). Provide new signal and power wiring and conduits.**
14. **Replace and relocate existing electromagnetic flowmeters FIT1001, FIT1002. FIT1003, FIT1004 (sludge to Belt Filter Press BFP-1, BFP-2, BFP-3). Provide new signal and power wiring and conduits.**
15. **Replace three (3) existing tank level sensors and remote indicators for polymer storage and batch processing. Reuse existing signal and power wiring and conduits.**
16. **Demolition of obsolete and abandoned motor control wiring and panel mounted devices within selected existing pump control panels. Retain existing VFDs, active power wiring, active circuit and motor protective devices, and active control signal wiring.**
17. **Reassignment of IP addressing for all networked control system clients at the facility using address allocations per COH instruction.**

B. Greenridge WWTP: Controls and Instrumentation work includes all work shown on the drawings and specified herein, including control points identified in Attachment "B" of this section, but not limited to:

1. **Provision of new PLC based control panel (RTU240E) at new Blower Building to control all 8 new aerators (equipped with VFD's.**
2. **Extension of existing fiber optic network loop from existing Operations & Maintenance Building to new Blower Building.**

3. Connection and integration of Manufacturer's New control system by Division 11 for Digestion Blowers including field wiring of manufacturer controls.
4. Provision of new control points for Aeration motor drives and associated systems.
5. Removal, extension, and reconnection of existing control points for replacement sodium bisulfate pumps.
6. Provisions of control points for new sodium bisulfate storage tanks utilizing new field devices with existing spare PLC I/O points.
7. Monitoring automation of (3) new motor operated flow splitter gates MG1, MG2, MG3.at the existing Flow Splitter to Clarifiers No.1, 2, 3.
8. Replacement of existing Clarifier Scum Pumping Control Panel and provisions for new associated control points.
9. Demolition of unused and abandoned controls for previously demolished, and/or non-existent equipment, and/or as indicated.

C. Coordination with Process Control System Integrator (PCSI) / Software Engineer specified in Section 13310.

D. All materials, equipment, labor, and services required to achieve a fully configured integrated and operational process control system shall be provided, including any and all necessary items not indicated herein.

E. In addition to system installations, the work of this division includes:

1. **Field verification of existing control systems.**
2. **PLC configuration and software programming..**
3. **Point-to-point checkout and system testing.**
4. **Control system commissioning, diagnostics, demonstration, and training.**
5. **Configuration, set-up, testing, and commissioning of controls network communication equipment and systems**

F. Auxiliary and accessory devices necessary for system operation or performance to interface with existing equipment or equipment provided by other suppliers under other sections of these specifications, shall be included whether or not they are shown on the drawings. These devices include, but are not limited to, transducers, current isolators, signal conditioners, interposing relays, power supplies, and fiber optic transceivers.

G. Substitution of functions or type of equipment specified shall not be acceptable. In order to ensure parts are interchangeable, maintain quality,

interface between the various subsystems, and establish minimums with regard to ranges and accuracy, strict compliance with the above requirements shall be maintained. System design shall allow for the removal of individual devices from service without disrupting other devices in service.

H. Equipment shall be fabricated, assembled, installed, and placed in proper operating condition in full conformity with detail drawings, specifications, engineering data, instructions, and recommendations by the equipment manufacturer as approved by the Engineer.

I. The work includes calibration of new instruments, and recalibration of existing instruments.

J. To facilitate the Owner's future operation and maintenance, products shall be by the same major manufacturer, with panel-mounted devices of the same type and model as far as possible.

K. The WWTP is an existing plant and all work shall be coordinated with its operating personnel to minimize impact on daily operation. Specifically, the contractor shall be responsible for providing a detailed daily plan to demonstrate how each of the PLCs shall be replaced or modified so that there is no operational down time experienced by the plant. This plan shall be a submitted for review and approval before any work is started on site. The actual sequence of the work is left to the contractor, but extensive pre-planning is necessary to accomplish the work. The following criteria must be used by the contractor when developing the PLC Replacement Plan:

a) PLC outages that result in more than one hour of operational downtime will not be allowed.

b) PLC outages of more than twice in an eight hour period will not be allowed.

c) Work on more than one PLC at a time will not be allowed.

d) The owner's personnel will operate all equipment in the plant, and the contractor will not operate equipment. Such work to place specific equipment into MANUAL operation will need to be coordinated with the owner at least 24 hours in advance. In cases where there are no existing devices to place equipment into a constant running operation (i.e. no Hand-Off-Auto switch), then the contractor shall improvise by using temporary wiring.

e) Provide temporary measures to ensure that the flow pacing signals used to meter chemicals are maintained at all times, regardless of which PLCs are out of service.

L. The WWTP is a fully operational facility monitored and controlled by local panels and PLCs. After the switch over, demonstrate that all new equipment and reused existing equipment is connected to the new PLCs and the new computer system is fully functional as specified and shown on the Contract Drawings.

M. The Owner shall retain salvage rights to all material and equipment removed in the course of this work. All materials and equipment retained by the Owner shall be delivered to a point designated by the Owner in Houston, Texas. Any material or equivalent not retained by the Owner shall be removed from the site and disposed of by the General Contractor in accordance with applicable regulations and laws.

N. All equipment and installations shall satisfy applicable Federal, State, and local codes.

O. The Contract Drawings and related specification sections provide additional details showing building plan layouts, instrument device specifications, functional requirements of the system, and interfacing with other equipment.

P. All materials, equipment, labor, and services necessary to achieve the monitoring and control functions described herein shall be provided in a timely manner so that the monitoring and control functions are available when the equipment is ready to be placed into service.

Q. Coordinate and schedule all required testing with the General Contractor, Owner, and Engineer.

R. Coordinate and schedule all required training with the General Contractor, Owner, and Engineer.

S. Provide a monthly status report and updated project schedule to the General Contractor to be included in the General Contractor's overall project schedule.

1.03 RELATED WORK

A. Furnish all materials, labor, and services specified in the following specification sections as required ensuring that a single, coordinated system is supplied:

1. Section 13310 SCADA Software Engineering Security and Quality Requirements
2. Section 13315 Process Instrumentation and Controls – Products
3. Section 13325 Control Panels and Panel Mounted Equipment
4. Section 13441 Pump Station Controls
5. Section 13471 Control Cabinet Enclosures
6. Section 13500 Communication Backbone Cabling
7. Section 13510 Communication Horizontal Cabling
8. Section 13600 Control and Instrumentation Cable

B. Divisions requiring coordination shall include, but not be limited to, the following:

1. Division 1 General Requirements

2. Division 13 Special Construction

3. Division 15 Mechanical

4. Division 16 Electrical

C. Coordinate with all equipment suppliers, mechanical subcontractor, electrical subcontractor, and General Contractor.

1.04 COORDINATION MEETINGS

A. Schedule and administer a minimum of three mandatory coordination meetings. Facilitate meetings; prepare agenda with copies to participants at least one week before scheduled meetings. The meetings will be conducted at the WWTP and shall include, as a minimum, attendance by the Owner, Engineer, General Contractor's project engineer, controls engineer, PSCI, and the electrical subcontractor.

1. The first coordination meeting shall be held in advance of the first shop drawing submittal. The purpose of the first meeting shall be to:

a. Summarize their understanding of the project

b. Discuss any proposed substitutions or alternatives

c. Schedule testing and delivery milestone dates

d. Provide a forum to coordinate hardware and software related issues

e. Request any additional information required from the Owner and/or Engineer.

Provide a draft version of shop drawings to the meeting to provide the basis for the Owner/Engineer's input into their development.

2. The second coordination meeting shall be held after the Field Instruments, Digital System Hardware, and Control Panels and Panel Mounted Equipment shop drawing submittals have been reviewed by the Engineer. The purpose of the second meeting is to:

a. Discuss comments made on the submittal packages

b. Refine scheduled milestone dates

c. Coordinate equipment installation activities

3. The last coordination meeting shall be held one month prior to factory acceptance testing. The purpose of the last coordination meeting is to discuss any remaining coordination requirements.

4. A typical agenda may include, but is not limited to, the following:

a. Review minutes of previous meetings

b. Review of work progress

c. Field observations, problems, and decisions

d. Identification of problems, which impede planned progress

e. Review of submittal schedule and submittal status

f. Review of off-site fabrications and delivery schedules

g. Maintenance of progress schedule

h. Corrective measures to regain projected schedules

i. Planned activities for subsequent work period

j. Coordination of projected progress

k. Maintenance of quality and work standards

l. Effect of proposed changes on progress schedule and coordination

m. Other business relating to project

B. The costs associated with the coordination meetings, including auto expenses, meal expenses, etc., shall not be included as part of the work of this section.

1.05 SUBMITTALS

A. Submit shop drawings in accordance with Section 01300, Submittals. The shop drawings shall fully demonstrate that the equipment and services to be furnished comply with the provisions of these specifications and provide a true and complete record of the equipment as manufactured and delivered. Each submittal shall be securely bound with an index and sectional dividers. All submittal drawings shall be legible and shall be 11 inches x 17 inches.

B. The Engineer shall determine whether a product is an "Approved Equal" based upon the information listed herein and the manufacturer's data sheets regarding the models specified. Alternate equipment must meet the criteria listed herein and any additional information in the manufacturer's data sheets in order to be accepted as an "Approved Equal". Supplier must furnish five working installation references for any alternate equipment along with owner, contact, and telephone number.

C. The submittals listed below shall be provided as a minimum. Other specification sections may require other submittals not listed here. Each submittal must be complete. No partial submittals will be accepted.

1. System Input/Output List

2. Project Plan

The project plan shall be submitted and approved before any additional submittals (except I/O List) will be accepted.

3. Field Instruments

4. Digital System Hardware

5. Control Panels and Panel Mounted Equipment

6. Testing

7. Training

8. Loop Diagrams

9. Spares, Expendables, and Test Equipment

10. Operation and Maintenance (O&M) Manuals

D. Submittal Descriptions

1. System Input/Output List

a. Within 90 days of the contract award submit a System Input/Output List submittal containing a complete system Input/Output (I/O) list for equipment connected to the control system under this Contract. The I/O list shall be submitted in a Microsoft Excel electronic file format on a CD ROM and an 8 1/2-inch by 11-inch hard copy. The hard copy list shall be sorted first by ISA tag name and second by I/O type (i.e., AI, AO, DI, DO, etc.). The list shall contain, as a minimum, the following for each active point and spare point:

(1) Tag name

(2) Type of I/O (i.e., DI, DO, AI or AO)

(3) I/O point address (PLC name/address and point address)

(4) Point name (or SPARE)

(5) Point description

(6) High/Low range and engineering units

(7) Alarm limits

(8) Relay normal status contact configuration

(9) I/O terminal point physical location (panel name, rack, slot etc.)

(10) 2-wire or 4-wire instrument.

2. Project Plan

a. The Project Plan shall provide an overview of the proposed system including system architecture drawing, approach to work, proposed work schedule indicating milestones and potential meetings, project personnel and organization, details of factory testing and field testing, and details of training program. The Project Plan shall also include an acknowledgment of conformance to the specification on a paragraph-by-paragraph basis indicating any proposed deviations. The schedule shall be coordinated with the project execution schedule and illustrate all major project milestones including the following:

(1) Schedule for all subsequent project submittals

(2) Schedule for all project design review meetings

(3) Schedule for manufacture, assembly and staging of all process control system equipment

(4) Schedule for all tests

(5) Schedule for shipment of all process control system equipment and peripheral devices

(6) Schedule for equipment start-up

(7) Schedule for all training

3. Existing System Replacement Work Plan

a. Provide in detail a step-by-step switchover plan from the existing system to the new PC/PLC-based monitoring and control system for the existing plant.

b. The submittal shall provide the coordination details among Owner, General Contractor, and subcontractors that may be affected by the switchover plan.

c. The submittal shall include a switchover schedule.

4. Field Instruments

a. This submittal shall provide complete documentation of all field instruments using ISA-S20 format. A complete Bill of Materials (BOM) listing all instrumentation equipment shall be provided.

b. Data Sheets

(1) Provide data sheets for each instrument listing model numbers, options, and ancillary devices that are being provided. The data sheets shall be provided with an index, proper identification, and cross-referencing. The data sheets shall include, but not be limited to, the following information:

(2) Plant Equipment Number and ISA tag number per the Loop Diagrams

(3) Product (item) name used herein and on the Contract Drawings

(4) Manufacturer's complete model number

(5) Location of the device

(6) Input output characteristics

(7) Range, size, and graduations

(8) Physical size with dimensions, enclosure NEMA classification and mounting details

(9) Materials of construction of all components

(10) Instrument sizing calculations where applicable

(11) Certified calibration data for all flow metering devices

c. Equipment Specification Sheets

(1) Provide equipment specification sheets, which, shall fully describe the device, the intended function, how it operates and its physical environmental and performance characteristics. Each data sheet shall have appropriate cross references to loop or equipment identification tags. As a minimum the specification sheets shall include the following:

i. Dimension, rigid clearances

ii. Mounting or installation details

iii. Connection

iv. Electrical power or air requirements

v. Materials of construction

vi. Environmental characteristics

vii. Complete information regarding the field instruments as required by ISA-S5.4 standards shall be provided under this contract.

5. Digital System Hardware

a. This submittal shall provide complete documentation of the proposed hardware (PLC's, RIO's, computers, communication equipment, cables, peripherals, etc.) A complete BOM listing all digital hardware equipment shall be provided.

b. The submittal shall include the following:

(1) System Block Diagram

A complete schematic system block diagram(s) showing the interconnections between major hardware components including, but not limited to:

i. Control centers

ii. Panels

iii. Power supplies

iv. Consoles

v. Computer and peripheral devices

vi. Telemetry equipment

vii. Local digital processors and like equipment

viii. Uninterruptible Power Supplies (UPS)

(2) The block diagram shall reflect the total integration of all digital devices in the system and any human machine interface (HMI) locations. Location of all components shall be clearly identified with appropriate cross-references.

(3) The diagram shall reference all interconnecting cabling requirements for digital components of the system including any data communication links.

c. Data Sheets

(1) A data sheet for each hardware component listing all model numbers, options, auxiliary and ancillary devices that are being provided.

(2) The data sheets shall be provided with an index, proper identification, and cross-referencing. They shall include, but not be limited to, the following information:

a) Equipment Number and ISA tag number

b) Product (item) name used herein and on the Contract Drawings

c) Manufacturer's complete model number

d) Location of the device

e) Input/output characteristics

f) Range, size, and graduations

g) Physical size with dimensions, enclosure NEMA classification and mounting details

h) Materials of construction of all components

i) Power supply device sizing calculations where applicable

d. The Digital System Hardware submittal shall also contain all planning information, site preparation instructions, grounding and bonding procedures, cabling diagrams, plug identifications, safety precautions or guards, and equipment layouts in order to enable the General Contractor to proceed with the detailed site preparation for all equipment.

6. Control Panels and Panel Mounted Equipment

a. This submittal shall provide complete documentation of all panel instruments, control panels, and control equipment not submitted elsewhere. A complete BOM listing all instrumentation and control equipment shall be provided.

b. Provide data sheets for each component listing all model numbers, options, and ancillary devices that are being provided. The data sheets shall be provided with an index, proper identification, and cross-referencing. The data sheets shall include, but not be limited to, the following information:

(1) Plant Equipment Number and ISA tag number

(2) Product (item) name used herein and on the Contract Drawings

(3) Manufacturer's complete model number

(4) Location of the device

(5) Input output characteristics

(6) Range, size, and graduations

(7) Physical size with dimensions, enclosure NEMA classification and mounting details

(8) Materials of construction of all components

(9) Panel instrument or control device sizing calculations where applicable

c. Provide equipment specification sheets, which shall fully describe the device, the intended function, how it operates, and its physical environmental and performance characteristics. Each equipment specification sheet shall have appropriate cross references to loop or equipment identification tags with model number and information pertaining to the item highlighted. As a minimum the specification sheets shall include the following:

(1) Dimension, rigid clearances

(2) Mounting or installation details
(3) Connection

(4) Electrical power or air requirements

(5) Materials of construction

(6) Environmental characteristics

(7) Performance characteristics

d. Provide detailed drawings covering control panels, consoles and/or enclosures, which shall include:

(1) Cabinet assembly and layout drawings to scale. Drawings shall include both front and interior subpanel layouts.

(2) Material, fabrication, and painting specifications

(3) Color selection samples for selection by the Engineer

(4) Where graphic display panels are required, submit detailed layouts to scale, including symbols and line widths, as well as color selection samples and details of fabrication. Half-scale layouts shall be acceptable.

(5) Panel wiring diagrams showing all power connections to equipment within and on the panel, combined panel power draw requirements (volts, amps), breaker sizes, fuse sizes, and grounding. This wiring diagram shall be in ladder logic format and shall reference the appropriate loop drawing for continuations or details where required. Show all wire numbers and terminal block designations.

e. The submittal shall also contain all planning information, site preparation instructions, grounding and bonding procedures, cabling diagrams, plug identifications, safety precautions or guards, and equipment layouts in order to enable the General Contractor to proceed with the detailed site preparation for all equipment.

f. The submittal shall also include heat dissipation calculations for each enclosure.

7. Testing

a. A test plan shall be submitted after the Owner and/or Engineer have approved all hardware submittals. The test plan shall demonstrate that the system meets the design specifications. The test plan shall be submitted prior to the preparation of the detailed test procedures and submit outlines of the specific proposed tests. Submittals shall include examples of the proposed forms and checklists.

b. The system shall be tested using the system architecture drawing and a Bill of Materials of all hardware indicating manufacturer, model, and serial number. The documents for the test plan shall be structured so that the Engineer understands what the inputs are, what the predicted outputs should be and what the actual outputs are. The test plan shall have a sign off and date block for the Installer, General Contractor, Owner, and Engineer.

c. The test plan should include the following as a minimum:

(1) A BOM listing control system components' manufacturer, model and serial number.

(2) System hardware summary

(3) A testing schedule describing the specific tasks to be performed and the time allotted for each task

(4) Communications tests to the various PLCs for discrete and analog I/O data transfer

(5) 100 percent I/O point test including all spare points based upon the previously submitted system I/O list

d. Test procedures shall be submitted after the test plan submittal has been reviewed by the Engineer and returned stamped either Approved or Approved as Noted, Confirm. The submittal shall document the proposed procedures to be followed during the test. Procedures shall include test descriptions, forms, and checklists to be used to control and document the required tests. Testing shall not be started until all Testing Submittals have been approved.

e. For Test Documentation, submit a copy of the signed off test procedures upon completion of each required test.

8. Training

a. Submit an overview of the proposed training plan. Each proposed course shall include:

(1) An overview of the training plan explaining why specific courses are proposed

(2) Course title and objectives

(3) Prerequisite training and experience of attendees

(4) Recommended attendees

(5) Course Content A topical outline

(6) Course Duration

(7) Course Location Training center or jobsite

(8) Course Format Lecture, laboratory demonstration, etc.

b. The Engineer shall review the preliminary training plan submittal with the Owner.

c. Upon receipt of the Owner's and Engineer's comments on the preliminary training plan, submit the specific proposed training plan. The training plan shall include:

(1) Definition of each course

(2) Specific course attendance

(3) Schedule of training courses including dates, duration, and location of each class

(4) Resumes of the instructors who will actually conduct the training

9. Loop Diagrams

a. Provide detailed loop diagrams on single 11 inches x 17 inches or 8.5 inches x 11 inches sheets for each monitoring or control loop. The submittal shall also be submitted in electronic format on a CD-ROM. The loop diagrams shall show all components of the loop both analog, digital, and discrete including all relays, switches, dropping resistors, etc. which are being provided for proper operation. Loop numbers used shall correspond to the loop numbers indicated in the contract documents. The format shall be the Instrument Society of America, Standard for Instrument Loop Diagrams, ISA-S5.4, and the following requirements:

(1) On each diagram present a tabular summary of:

i. The output capability of the transmitting instrument

ii. The input impedance of each receiving instrument

iii. Estimate of the loop wiring impedance based on wire sizes and approximate length used

iv. The total loop impedance

v. Reserve output capacity

(2) Show all interconnecting wiring between equipment, panels, terminal junction boxes and field mounted components. The diagrams shall show all components and panel terminal board identification numbers and all wire numbers. This diagram shall include all intermediate terminations between field elements and panels (e.g., terminal junction boxes). The diagrams shall be coordinated with the electrical contractor and bear mark showing this has been done.

(3) Show location of all devices

(4) Show instrument description showing type, manufacturer, model number, range, setpoints, and operation (e.g., fail open, open on energization, normally closed, etc.) as applicable.

(5) Show all instrument loop power or instrument air requirements back to termination on terminal block or bulkhead, fuse blocks (including fuse size), etc., as applicable.

(6) Show all grounding points within cabinets and panels and identify the connection point of individual components.

(7) Complete information regarding the field instruments as required by ISA-S5.4 standards shall be provided on the loop diagrams under this contract.

10. Spares, Expendables, and Test Equipment

a. This submittal shall include the following for each Subsystem:

(1) A list of, and descriptive literature for, spares, expendables, and test equipment as specified in Instrumentation Sections.

(2) A separate list of, and descriptive literature for, additional spares, expendables, and test equipment as recommended.

(3) Unit and total cost for the additional spare items recommended for each subsystem

(4) Storage instructions for all spare parts

(5) Any specialty software or hardware tools used during configuration of the project.

NOTE: These specialty tools must be turned over to the Owner.

11. Operation and Maintenance (O & M) Manuals

a. Provide O & M Manuals per section 13300-1.12.

b. The submittal shall also be submitted in electronic format on a CD-ROM

1.06 REFERENCE STANDARDS

A. American Society for Testing and Materials (ASTM).

1. ASTM A269 Standard Specification for Seamless and Welded Austenitic Stainless Steel Tubing for General Service.

B. Instrument Society of America (ISA)

1. ISA S5.2 Binary Logic Diagrams for Process Operations

2. ISA S5.3 Graphic Symbols for Distributed Control/Shared Display Instrumentation Logic and Computer Systems.

3. ISA S5.4 Instrument Loop Diagrams

C. American National Standards Institute (ANSI)

1. ANSI X3.5 Flowchart Symbols and Their Usage in Information Processing

D. National Electrical Manufacturers Association (NEMA)

E. Where reference is made to one of the above standards, the revision in effect at the time of bid opening shall apply.

1.07 QUALIFICATIONS

A. Demonstrate capability to perform all work necessary to select, furnish, configure, customize, debug, install, connect, calibrate, and place into operation all hardware and software specified within this specification and other related divisions of this specification.

B. The provider of the work of this section shall be a "systems house" regularly engaged in the design and installation of computer systems and their associated subsystems as they apply to the municipal water or wastewater industry. For the purposes of this specification section, a "systems house" shall be interpreted to mean an organization that complies with all of the following criteria:

1. Employs a Texas Registered Professional Control Systems Engineer or Texas Registered Professional Electrical Engineer to supervise or perform the work required by this specification section.

2. Employs personnel on this project who have successfully completed a manufacturer's training course on the configuration and implementation of the specific programmable controllers, computers, and software proposed for this project.

3. Has performed work of similar or greater complexity on at least three projects within the last five years and has implemented and completed at least one of the three projects with the proposed HMI software.

4. Has been in the water/wastewater industry performing the type of work specified in this specification section for a minimum of five continuous years.

C. The provider of the work of this section shall maintain a fully equipped office/production facility with full time employees capable of fabricating, configuring, installing, calibrating, troubleshooting, and testing the system specified herein. Qualified repair personnel shall be available and capable of reaching the facility within 24 hours.

D. Furnish equipment which is the product of one manufacturer to the maximum practical extent. Where this is not practical, all equipment of a given type shall be the product of one manufacturer.

E. The General Contractor must select a pre-approved controls subcontractor from the list below. Only pre-approved companies are accepted.

BL Technology, Inc.
13171 Misty Willow Drive
Houston, TX, 77070
Attn: Robert Lee
Phone: 281-970-8191

Boyer Inc.
8904 Fairbanks N. Houston
Houston, TX 77064
Attn: Jack Levy
Phone: 713-466-5395

MCC Weimar
Weimar Manufacturing
505 South Eagle Street
Weimar, TX 78962
Attn: Frank Macaulay
Phone: 979-725-8527

F. Being listed in this specification section does not relieve any other qualification requirement specified in this section.

G. Listed companies are not required to submit a qualification proposal. Companies interested in being pre-approved, shall submit three (3) copies of a qualification proposal to the Engineer no later than two weeks before the bid opening date. Additional pre-approved companies will be listed by Addendum no later than seven (7) days before the bid opening date.

1. The qualification proposal shall provide details and a description of how the supplier proposes to fulfill the requirements set forth in this Specification. The supplier shall present the proposal in sufficient detail so that proper evaluation regarding the experience and capabilities of the supplier can be performed.

   a. The proposal shall contain evidence that the supplier has sufficient financial resources to meet the obligations

incidental to the performance of the work including available bonding. (This requirement may be provided in the form of a verifiable or certified financial report for the company's latest fiscal year).

b. The proposal shall contain a list of personnel available for assignment to the responsible positions of Project Manager, Project Engineer, Lead Programmer, Installation Supervisor, and Area Service Representative. Also, include a concise resume of each individual's education, work experience, and accomplishments.

c. The proposal shall contain the following specific information:

(1) Maintenance services available for hardware and software: Evaluation will be based on the supplier's capability to provide the required routine and emergency services. The supplier's proposal is to describe the capabilities and location of his/her nearest (to job site) service organization. It is the intent of the Specification to obtain all system maintenance services from the supplier. If the supplier intends to subcontract all or portions of the service requirements, it must be stated as such along with the name and address of the organization.

(2) Technical validation examples of recently completed and similar scope projects: The supplier shall provide information regarding type, size, complexity, and performance of five (5) systems recently completed, along with names, addresses, and telephone numbers of persons qualified to verify supplier's statements approximate cost of the instrumentation system supplied, project completion date and description. Evaluation shall be based on the similarity of system requirements and supplier's performance.

(3) A description of how the supplier plans to execute the various functions and locations where the various portions of the work will be performed, coordinated and managed (e.g., design, engineering, manufacturing, programming, testing and scheduling). The vendor is required to state in his/her proposal

those functions, which he/she intends to subcontract to other organizations and include the name, address and capabilities of these organizations.

d. The supplier shall be required to demonstrate a minimum of five (5) years recent, past experience in the design, manufacture and commissioning of instrumentation and control systems of comparable size, type and complexity to the proposed project. The supplier shall be required to have his/her own in house capability to handle complete system engineering, fabrication, and testing.

e. The supplier shall indicate that he/she has in his/her employ capable personnel for detailed engineering, coordination, drafting, procurement and expediting, scheduling, construction, testing, inspection, installation, training start up service for calibration and commissioning and warranty compliance for the period specified.

1.08 DELIVERY, STORAGE AND HANDLING

A. Provide Delivery, Storage, and Handling requirements per Specification Section 01600 and as specified below:

B. Shipping Precautions

1. After completion of shop assembly, factory test, and approval, all equipment, cabinets, panels, and consoles shall be packed in protective crates and enclosed in heavy duty polyethylene envelopes or secured sheeting to provide complete protection from damage, dust and moisture. Dehumidifiers shall be placed inside the polyethylene coverings. The equipment shall then be skid mounted for final transport. Lifting rings shall be provided for moving without removing protective covering. Boxed weights shall be shown on shipping tags together with instructions for unloading, transporting, storing, and handling at jobsite.

2. Special instructions for proper field handling, storage, and installation required by the manufacturer for proper protection, shall be securely attached to the packaging for each piece of equipment prior to shipment. The instructions shall be stored in resealable plastic bags or other acceptable means of protection.

3. None of the control equipment shall be shipped to the site until the room(s) are environmentally suitable.

C. Identification

1. Each component shall be tagged to identify its location, tag number and function in the system. Identification shall be prominently displayed on the outside of the package.

2. Each piece of equipment supplied shall have a permanent stainless steel tag firmly attached and permanently and indelibly marked with the instrument tag number, as given in the Drawings.

D. Storage

1. Equipment shall not be stored out of doors. Equipment, including in line equipment, shall be stored in dry permanent shelters and adequately protected against mechanical injury. If any apparatus has been damaged, the General Contractor, at his own cost and expense, shall repair such damage. If any equipment has been subject to possible damage by water, it shall be thoroughly dried and put through such tests as directed by the Engineer. Any repair or replacement shall be at the cost and expense of the General Contractor.

1.09 PROJECT/SITE REQUIREMENTS

A. Environmental Requirements. Air-conditioned areas require NEMA Type 12 ventilated enclosures. Equipment below grade shall be NEMA Type 4X. All other areas require NEMA Type 4X stainless steel enclosures. Refer to Division 16 for area environmental hazardous classifications. All instrumentation enclosures and all instruments mounted outdoors shall be furnished with sun shields.

B. Elevation. Equipment shall be designed to operate at a ground elevation appropriate for the Houston, Texas area.

C. Temperature. Indoor areas' equipment shall be suitable for 10 to 35 C degrees ambient. Outdoor areas' equipment shall be suitable for 30 to 50 C degrees ambient. Storage temperatures shall range from zero to 50 C degrees ambient. Additional cooling or heating shall be furnished if required by the equipment.

D. Relative Humidity. Air-conditioned area equipment shall be suitable for 20 to 95 percent relative, non condensing humidity. All other equipment shall be suitable for 0 to 100 percent relative, condensing humidity.

E. Power Supply. 120 volts AC sources of electric supply shall be unregulated industrial panel boards.

1.10 MAINTENANCE

A. Spare Parts

1. Spare parts shall be as defined in the related specification sections. All spare parts shall be new and unused.

2. All spare parts shall be individually packaged and labeled.

3. Provide one (1) gallon of touch up paint, in one quart containers, for each type and color used for all cabinets, panels, consoles, etc., supplied under the related specification sections.

4. The spares listed above shall be packed in a manner suitable for long term storage and shall be adequately protected against corrosion, humidity, and temperature.

1.11 WARRANTY

A. Provide equipment warranties per Section 01740, Warranties and Bonds, and herein.

1.12 O & M MANUALS

A. Prior to final acceptance of the system and owner training, operating and maintenance manuals covering instruction and maintenance on each type of equipment shall be furnished in accordance with Section 01730, Operating and Maintenance Data.

B. The instructions shall be bound in three ring binders with Drawings reduced or folded for inclusion and shall provide the following as a minimum:

1. A comprehensive index

2. A complete "As Constructed" set of approved shop Drawings

3. A complete list of the equipment supplied, including serial numbers, ranges, and pertinent data

4. Full specifications for each item

5. System schematic drawings "As Constructed," illustrating all components, piping and electrical connections of the systems supplied under this Section

6. Detailed service, maintenance, and operation instructions for each item supplied

7. Special maintenance requirements particular to this system clearly defined, along with special calibration and test procedures

8. Operating instructions which incorporate a functional description of the entire system, with references to the systems schematic Drawings and instructions

9. Complete parts lists with stock numbers and name, address, and telephone number of the local supplier

C. The final documentation shall be new documentation written specifically for this project, but may include standard and modified standard documentation. Modifications to existing hardware or software manuals shall be made on the respective pages or inserted adjacently to the modified pages. All standard documentation furnished shall have all portions that apply clearly indicated. All portions that do not apply shall be lined out.

D. The manuals shall contain all illustrations, detailed drawings, wiring diagrams, and instructions necessary for installing, operating, and maintaining the equipment. The illustrated parts shall be numbered for identification. All information contained therein shall apply specifically to the equipment furnished and shall only include instructions that are applicable. All such illustrations shall be incorporated within the printing of the page to form a durable and permanent reference book.

E. If any documentation or other technical information is provided, which is considers proprietary, such information shall be designated. Documentation or technical information which is designated as being proprietary will be used only for the design, construction, operation, or maintenance of the system and, to the extent permitted by law, will not be published or otherwise disclosed.

F. The final documentation requirements are as follows:

1. As-built documentation shall include all previous submittals, as described in this Specification, updated to reflect the as built

system. Any errors in or modifications to the System resulting from the Factory and/or Field Acceptance Tests shall be incorporated in this documentation.

2. The Hardware Maintenance documentation shall describe the detailed preventive and corrective procedures required to keep the System in good operating condition. Within the complete Hardware Maintenance documentation, all hardware maintenance manuals shall make reference to appropriate diagnostics, where applicable, and all necessary timing diagrams shall be included. A maintenance manual or a set of manuals shall be furnished for all delivered hardware, including peripherals. The Hardware Maintenance documentation shall include, as a minimum, the following information:

   a. Operation Information This information shall include a detailed description of how the equipment operates and a block diagram illustrating each major assembly in the equipment.

   b. Preventive Maintenance Instructions These instructions shall include all applicable visual examinations, hardware testing, diagnostic routines, and the adjustments necessary for periodic preventive maintenance of the System.

   c. Corrective Maintenance Instructions These instructions shall include guides for locating malfunctions down to the card replacement level. These guides shall include adequate details for quickly and efficiently locating the cause of an equipment malfunction and shall state the probable source(s) of trouble, the symptoms, probable cause, and instructions for remedying the malfunction.

   d. Parts Information This information shall include the identification of each replaceable or field repairable module. All parts shall be identified on a list in a drawing; the identification shall be of a level of detail sufficient for procuring any repairable or replaceable part. Cross references between the Instrumentation System Supplier's part number and manufacturer's part numbers shall be provided.

   e. System Backup/Restore - This information shall include a detailed description of the procedure for backing up the computer system (including PC and PLC); reloading using a backup; and completely restoring a PC and/or PLC from a backup.

1.13 PROGRAMMING

A. Schedule a meeting with City of Houston Public Works Automation Monitoring (713-775-2636) or other designated City personnel to discuss PLC programming philosophy for the project.

B. Program PLCs to reflect the philosophy provided by City of Houston.

C. Schedule a follow-up meeting to review proposed programming.

D. After new PLCs are operational, schedule an additional meeting to review operation of PLCs.

PART 2: PRODUCTS

2.01 GENERAL

A. Process Control System:

1. All instrumentation supplied shall be of the manufacturer's latest design and shall produce or be activated by signals that are established standards for the water and wastewater industries.

2. All electronic instrumentation shall be of the solid state type and shall utilize linear transmission signals of 4 to 20 mA DC (milliampere direct current), however, signals between instruments within the same panel or cabinet may be 1-5V DC (volts direct current), or the like.

3. Output of equipment not of the standard signals as outlined, shall have the output immediately raised and/or converted to compatible standard signals for remote transmission. No zero-based signals will be allowed.

4. All instruments shall be provided with mounting hardware, floor stands, wall brackets, or instrument racks as shown on the Drawings or as required.

5. Equipment installed in a hazardous area shall meet Class, Group, and Division as shown on the Electrical Drawings, to comply with the National Electrical Code.

6. All indicators and recorder readouts shall be linear in process units, unless otherwise noted.

7. All transmitters shall be provided with either integral indicators or conduit mounted indicators in process units, accurate to two percent (2%).

8. Electronic equipment shall be of the manufacturer's latest design, utilizing printed circuitry and suitably coated to prevent contamination by dust, moisture and fungus. Solid state components shall be conservatively rated for their purpose to assure optimum long-term performance and dependability over ambient atmosphere fluctuations and 0 to 95% percent relative humidity. The field mounted equipment and system components shall be designed for installation in dusty, humid, and slightly corrosive service conditions.

9. All equipment, cabinets, and devices furnished hereunder shall be heavy duty type, designed for continuous industrial service. The system shall contain products of a single manufacturer, insofar as possible, and shall consist of equipment models that are currently in production. All equipment provided shall be of modular construction and shall be capable of field expansion.

10. The field mounted digital system equipment and system components shall be designed for installation in dusty, humid, and corrosive service conditions.

11. All electronic/digital equipment shall be provided with radio frequency interference protection and shall be FCC approved.

B. Electrical

1. All equipment shall be designed to operate on a 60 Hertz alternating current power source at a nominal 120 volts, plus or minus 10 percent, except where specifically noted. All regulators and power supplies required for compliance with the above shall be provided between power supply and interconnected instrument loop. Where equipment requires voltage regulation, constant voltage transformers shall be supplied.

2. Panels containing networking equipment and PLC equipment shall be powered by two separate 24VDC power supplies. One pair of redundant 24VDC power supplies shall be furnished for the networking equipment and a separate pair of redundant 24VDC

power supplies shall be furnished for loop powered instrumentation devices and PLC equipment.

3. Materials and equipment used shall be UL approved wherever such approved equipment and materials are available.

4. All equipment shall be designed and constructed so that in the event of a power interruption, the equipment specified hereunder shall resume normal operation without manual resetting when power is restored.

C. Software

1. PLC Configuration and Programming Software
   a. Provide Siemens SIMATIC STEP 7 (TIA Portal) latest version, or pre-approved equal, licensed to City of Houston.
   b. Program PLC microprocessors controlling new equipment and systems per automated sequences of operation as described within respective Sections of this Specification.
   c. Program PLC microprocessors controlling existing equipment and systems for remote monitoring & manual control as directed by City Engineer.

2. Human Machine Interface (HMI) Software

   a. Provide SIMATIC WinCC, latest version, or pre-approved equal, licensed to City of Houston
   b. Provide sufficient software and licensing copies for two (2) on-site HMI workstations.
   c. Install, configure, and program HMI software in accordance with paragraph 1.13 of this Section.
   d. Include configuration and creation of graphical process screens customized for process flow of the plant.
   e. Include configuration and implementation of process alarm handlers.
   f. Include configuration and implementation of automatic historical operational database.
   g. Include software update and configuration of remote monitoring station HMI.

2.02 LIGHTNING/SURGE PROTECTION

A. Lightning/Surge protection shall be provided to protect the electronic instrumentation system from induced surges propagating along the signal and power supply lines. The protection systems shall be such that the

protective level shall not interfere with normal operation, but shall be lower than the instrument surge withstand level, and be maintenance free and self-restoring. Instruments shall be housed in a suitable metallic case, properly grounded. Ground wires for all surge protectors shall be connected to a good earth ground, and where practical, each ground wire run individually and insulated from each other. These protectors shall be mounted within the instrument enclosure or a separate NEMA 4 junction box coupled to the enclosure.

B. Either a two or three-stage protection circuit, depending on the application, shall furnish I/O protection.

C. All wiring, hardware, and connection means shall comply with the National Electric Code and/or applicable local codes.

D. All suppressors shall have integral mounting brackets to attach 35mm DIN rail conforming to DIN EN50022, with the exception of conduit mounted devices.

E. The suppressor shall be mounted as close to the equipment it is protecting as possible.

F. Mounting guidelines will be followed as indicated in installation instruction provided by the manufacturer.

G. Wires shall be attached to the suppressor by means of a cable-clamping terminal block activated by a screw. Connections shall be gas-tight, and the terminal block shall be fabricated of non-ferrous, non-corrosive materials.

H. All wiring points and plug connections shall be "touch safe" with no live voltages that can make contact with a misplaced finger in accordance with IEC 529.

I. Analog and discrete and data protection DIN rail mounted, pluggable devices shall meet the following.

1. Surge suppression modules for 24V and 110V circuits shall be UL listed or recognized.

2. Surge protection shall consist of a multistage hybrid circuit with staging inductors or resistors to properly coordinate the components.

3. DIN rail mounted surge protection modules shall consist of two parts; a base terminal block and a plug protection module.

Replacing a plug shall not require the removal of any wires nor shall it interrupt the signal. Base and plug shall have the ability to be coded to accept only the correct voltage plug.

4. Surge protection for analog or discrete I/O shall be designed to withstand a maximum 10 kA test current of a 8/20 microsecond waveform according to IEC 1024 Application Guide A and ANSI/IEEE C62.41 Category C Area.

5. Surge protection for hazardous area locations will conform to EN 50 020/DIN EN 50 020/VDE 0170/0171 part 7: 1996-04. Surge protection for hazardous areas shall have at least 500V isolation between intrinsic safety ground and earth ground.

6. Both plugs and bases shall have a rating of IP20 according to IEC 529. Bases shall have an integral label holder to mark each terminal block.

7. Operating temperature range shall be at least -40□C to +80□C.

8. Bases shall include metal mounting foot, which provides ground connection to DIN-rail.

9. Manufacturers:

   a. Analog: Phoenix Contact model series PT 2 x 2. One plug and base required for two analog loops. Discrete 5-24V: Phoenix Contact model series PT 4 x 1. One plug and base required for every four discrete signals. Discrete 60-230V: Phoenix Contact model series PT 2 x 1 VA. One plug and base required for every two discrete signals.

   b. Dehn, with models to match the Phoenix Contact device ratings.

   c. Approved Equal.

J. Analog and discrete DIN rail mounted, non-pluggable, high density devices shall meet the following

1. Surge protection shall consist of a multistage hybrid circuit with staging inductors or resistors to properly coordinate the components. Series resistance shall not exceed 4.7 ohms (+/- 10%).

2. DIN rail mounted surge protection housing width shall not exceed 6.2mm.
3. Surge protection for analog and digital I/O shall be designed to withstand a 5 kA test current of a (8/20)s waveform according to IEC 1024 Application Guide A and ANSI/IEEE C62.41 (Line to Ground). Surge handling capability of Line 1 + Line 2 shall be 10 kA of (8/20)s waveform.

4. Operating temperature range shall be at least -40C to +85C.

5. Maximum load current through the surge protection module shall not exceed 250 milliamps for analog and digital signal protection.

6. Cutoff frequency for analog modules shall be 3 MHz for a 50-ohm system and 1 MHz for a 150-ohm system. Cutoff frequency for digital modules shall be 2 MHz for a 50-ohm system and 600 KHz for a 150-ohm system.

7. Wire size range shall between 24 and 14 AWG.

8. Ex-I modules shall contain only diode and gas tube (no MOV) and shall be isolated from ground by 500VDC as required by EN 50 020.

9. Manufacturers

    a. Phoenix Contact model series TT-2-PE-24DC, TT-2/2-24DC, or TT-EX(I)-24DC. Phoenix Contact model series PT 2 x Ex(I)-24DC. One plug and base required for two analog loops or four discrete signals.
    b. Dehn, with models to match the Phoenix Contact device ratings.

    c. Approved Equal.

K. Analog Signals (Conduit Mounted)

1. Surge protection shall consist of a multistage hybrid circuit utilizing only diodes and gas discharge tubes but no metal oxide varistors (MOVs).

2. Surge protection for analog and digital I/O shall be designed to withstand a 10 kA test current of a (8/20) μs waveform according to IEC 1024 Application Guide A and ANSI/IEEE C62.41 Category C Area.

3. Surge protection shall not have more than 10 ohms of series resistance.
4. Surge protection shall have a response time less than 1μs.
5. Maximum operating voltage shall not exceed 28 VDC.
6. Surge protection shall not have a cutoff frequency less than 400kHz (for a 600 ohm system) to allow HART protocol and other superimposed smart digital signals to function.
7. Surge protection module shall have an operating temperature range of at least -40°C to +65°C.
8. Maximum load current through the surge protection module shall not exceed 250 mA.
9. Manufacturers:
    a. Phoenix Contact model series PIPETRAB. Protection circuit is mounted in 3/4" stainless steel pipe nipple.
    b. Dehn, with models to match the Phoenix Contact device ratings.
    c. Approved Equal.

PART 3: EXECUTION

3.01 GENERAL INSTALLATION

A. The process control system, instrumentation, and accessory equipment shall be installed in accordance with the manufacturer's instructions. The locations of equipment, transmitters, alarms, and similar devices shown on the drawings are approximate only. Exact locations shall be as approved by the Engineer during construction. All information relevant to the placing of process control work shall be obtained in the field. In case of any interference with other work, proceed as directed by the Engineer and furnish all labor and materials necessary to complete the work in an approved manner.

B. Two complete sets of approved shop drawings shall be kept at the job site during all on site construction. Both sets shall be marked up identically to

reflect any modifications made during field installation or start up. All markings shall be verified and initialed by the Engineer or his designated representative.

C. Following completion of installation and the Operational Readiness Test, one set of the marked up drawings shall be provided to the Engineer; the other set shall be retained by the Supplier for incorporation of the mark ups into final as built documentation.

D. The instrumentation installation details on the Contract Drawings indicate the designed installation for the instruments specified. Where specific installation details are not specified or shown on the Drawings, the American Petroleum Institute (API) Recommended Practice 550 shall be followed as applicable.

E. All work shall be executed in full accordance with codes and local rulings. Should any work be performed contrary to said rulings, ordinances and regulations, the General Contractor shall bear full responsibility for such violations and assume all costs arising therefrom.

F. All equipment used in areas designated as hazardous shall be designed for the Class, Group, and Division as required on the Electrical Drawings for the locations. All work shall be in strict accordance with codes and local rulings. Should any work be performed contrary to said rulings, ordinances and regulations, the Supplier shall bear full responsibility for such violations and assume all costs arising therefrom.

G. Unless specifically shown in the Contract Drawings, direct reading or electrical transmitting instrumentation shall not be mounted on process piping. Instrumentation shall be mounted on instrument racks or stands as detailed on the installation detail drawings or an Engineer approved equal mounting rack or stand. All instrumentation connections shall be provided with shutoff and drain valves. For differential pressure transmitters, valve manifolds for calibration, testing, and blow down service shall also be provided. For slurries, chemical or corrosive fluids, inline diaphragm seals shall be provided.

H. All piping to and from field instrumentation shall be provided with necessary unions, test tees, couplings, adapters, and shut off valves.

I. Field instruments that require power supplies shall be provided with local electrical shutoffs and fuses as required.

J. Provide control panels in accordance with Section 13325.

K. Brackets and hangers required for equipment mounting shall be provided and shall be installed in a workmanlike manner and not interfere with any other equipment.

L. Investigate each space in the building through which equipment must pass to reach its final location. If necessary, ship material in sections sized to permit passing through restricted areas in the building. Investigate and make any field modifications to the allocated space for each cabinet, enclosure, and panel to assure proper space and access (front, rear, and side).

M. The shield on each process instrumentation cable shall be continuous from source to destination and be grounded at the source end as directed by the manufacturer of the instrumentation equipment. In no case shall there be more than one ground point for each shield.

N. Lifting rings shall be removed from cabinets/assemblies. Hole plugs the same color as the cabinet shall be provided for the holes.

O. Coordinate the installation, the placing and location of system components, and their connections to the process equipment panels, cabinets and devices, subject to the Engineer's approval. Ensure that all field wiring for power and signal circuits is done correctly in accordance with best industry practice and provide for all necessary system grounding to ensure a satisfactory functioning installation. The General Contractor hereunder shall schedule and coordinate his work under this Section with that of the electrical work specified under applicable Sections of Division 16.

P. Provide service by the PLC service representative to verify that the entire PLC system is installed per the manufacturer's requirements. Provide certified copies of all the tests/field reports supplied by the PLC service representative to the Owner for their records.

Q. Provide service by a factory-trained representative to verify that the entire local area network (LAN) is installed per the manufacturer's requirements. Include in the bid the cost of the factory trained representative to inspect all LAN terminations and the cost of testing the LAN to verify that it is installed and operating correctly (e.g., data being transferred from node to node, no excessive timeouts, minimal collisions, etc.) Provide certified copies of all tests and legible copies of all field reports generated by the factory-trained representative to the Owner for their records.

3.02 TESTS (GENERAL)

A. Test all equipment at the factory prior to shipment. Unless otherwise specified in the individual specification sections, all equipment provided shall be tested at the factory as a single fully integrated system.

B. As a minimum, the testing shall include the following:

1. Unwitnessed Factory Test (UFT)

2. Functional Demonstration Test (FDT)

C. Each test shall be in the cause and effect format. The person conducting the test shall initiate an input (cause) and, upon the system's or subsystem's producing the correct result (effect), the specific test requirement shall be satisfied.

D. All tests shall be conducted in accordance with prior Engineer approved procedures, forms, and checklists. Each specific test shall be described and followed by a section for sign off by the appropriate party after its satisfactory completion.

E. Copies of these sign off test procedures, forms, and checklists will constitute the required test documentation.

F. Provide all special testing materials and equipment. Whenever possible, perform tests using actual process variables, equipment, and data. When it is not practical to test with real process variables, equipment, and data, provide suitable means of simulation. Define these simulation techniques in the test procedures.

G. Coordinate all testing with the Engineer, all affected Subcontractors, and the Owner.

H. The Engineer reserves the right to test or retest all specified functions whether or not explicitly stated in the prior approved Test Procedures.

I. The Engineer's decision shall be final regarding the acceptability and completeness of all testing.

J. No equipment shall be shipped until the Engineer has received all test results and approved the system.

K. Furnish servicemen and all special calibration and test equipment to perform the field tests.

L. Correction of Deficiencies

1. All deficiencies in workmanship and/or items not meeting specified testing requirements shall be corrected to meet specification requirements at no additional cost to the Owner.

2. Testing, as specified herein, shall be repeated after correction of deficiencies is made until the specified requirements are met. This work shall be performed at no additional cost to the Owner.

3.03 UNWITNESSED FACTORY TESTS (UFT)

A. The entire system, except primary elements, final control elements, and field mounted transmitters, shall be interconnected and tested to ensure the system operates as specified. All analog and discrete input/output points not interconnected at this time shall be simulated to ensure proper operation of all alarms, monitoring devices/functions, and control devices/functions. All process control strategies shall be simulated to ensure proper operation according to approved shop drawing.

B. All panels and assemblies shall be inspected and tested to verify that they are in conformance with related submittals, specifications, and Contract Drawings.

C. During the tests all digital system hardware and software shall have operated continuously for five days without a failure to verify the system is capable of continuous operation. The unwitnessed test results shall be submitted to the Engineer for approval prior to the start of the Witnessed Factory Test (WFT).

3.04 FUNCTIONAL DEMONSTRATION TEST (FDT)

A. Prior to startup, the entire installed instrument and control system shall be certified that it is ready for operation. All preliminary testing, inspection, and calibration shall be complete.

B. Once the facility has been started up and is operating, a witnessed FDT shall be performed on the complete system to demonstrate that it is operating and in compliance with these Specifications. Each specified function shall be demonstrated on a paragraph-by-paragraph, loop-by-loop, and site-by-site basis.

C. Loop-specific and non-loop-specific tests shall be the same as specified under WFT except that the entire installed system shall be tested and all functionality demonstrated.

D. Updated versions of the documentation specified to be provided during the factory tests shall be made available to the Engineer at the job-site both before and during the tests. In addition, one copy of all O&M Manuals shall be made available to the Engineer at the job-site both before and during testing.

E. The daily schedule specified to be followed during the factory tests shall also be followed during the FDT.

F. The system shall operate for 100 continuous hours without failure before this test shall be considered successful.

G. Demonstrate communication failure and recovery

H. Demonstrate total power failure and recovery. NOTE: The UPS shall be removed for this test.

I. Demonstrate a catastrophic failure and recovery of a workstation and a RTU (PLC).

J. Demonstrate procedure for backing up the workstation, and RTU (PLC); reload using a backup; and completely restore a workstation and RTU (PLC) from a backup.

3.05 TRAINING

A. General

1. The cost of training programs for the Owner's personnel shall be included in the Contract price. Where practical, the training and instruction shall be directly related to the system being supplied. The training shall be provided based on time and not courses to allow the Owner the flexibility to utilize the training time at his discretion.

2. Training shall be conducted at the Owner's facilities.

3. All Technicians, Operators, Engineers, and Managers of the Facility shall require training on the Process Control System (PCS). The training courses shall address operation, maintenance, and troubleshooting of the system provided. The courses shall be designed specifically for the type of personnel attending, such as Operators, Engineers, etc.

4. All training schedules shall be coordinated with, and at the convenience of, the Owner. Shift training may be required to correspond to the Owner's working schedule.

5. Provide detailed training manuals to supplement the training courses. The manuals shall include specific details of equipment supplied and operations specific to the project.

6. The trainer shall make use of teaching aids, manuals, slide/video presentations, etc. After the training services, all training materials shall be delivered to Owner.

. END OF SECTION

LPC GROUP	PROCESS	PLC	POINT DESCRIPTION	POINT TYPE					FIELD DEVICE		POINT IDENTIFICATION		NOTES
				AI	DI	AO	DO	SW		TYPE	RTU	POINT NAME	
LPC-400	CLARIFICATION	REPLACE EXISTING WITH NEW SIEMENS S7 PLC	FLOW SPLITTER GATE A		X				REMOVE	EXISTING	RTU0250D	XT0250ZLC431	1
			FLOW SPLITTER GATE A		X				REMOVE	EXISTING	RTU0250D	XT0250ZLP431	1
			FLOW SPLITTER GATE B		X				REMOVE	EXISTING	RTU0250D	XT0250ZLC432	1
			FLOW SPLITTER GATE B		X				REMOVE	EXISTING	RTU0250D	XT0250ZLP432	1
			FLOW SPLITTER GATE C		X				REMOVE	EXISTING	RTU0250D	XT0250ZLC433	1
			FLOW SPLITTER GATE C		X				REMOVE	EXISTING	RTU0250D	XT0250ZLP433	1
			FLOW SPLITTER GATE D		X				REMOVE	EXISTING	RTU0250D	XT0250ZLC434	1
			FLOW SPLITTER GATE D		X				REMOVE	EXISTING	RTU0250D	XT0250ZLP434	1
			LPC-400 CPU STATUS				X		REUSE	EXISTING	RTU0250D	YT0250XLF400	2
			FLOW SPLITTER BOX PH	X					REMOVE	EXISTING	RTU0250D	IT0250AI401	1
			FLOW SPLITTER GATE #1 OPEN INDICATOR		X				NEW	MOTORIZED ACTUATOR	RTU0250D	XT0250ZIH401	4
			FLOW SPLITTER GATE #1 CLOSE INDICATOR		X						RTU0250D	XT0250ZIL401	4
			FLOW SPLITTER GATE #2 OPEN INDICATOR		X				NEW	MOTORIZED ACTUATOR	RTU0250D	XT0250ZIH402	4
			FLOW SPLITTER GATE #2 CLOSE INDICATOR		X						RTU0250D	XT0250ZIL402	4
			FLOW SPLITTER GATE #3 OPEN INDICATOR		X				NEW	MOTORIZED ACTUATOR	RTU0250D	XT0250ZIH403	4
			FLOW SPLITTER GATE #3 CLOSE INDICATOR		X						RTU0250D	XT0250ZIL403	4
			FLOW SPLITTER GATE #4 OPEN INDICATOR		X				NEW	MOTORIZED ACTUATOR	RTU0250D	XT0250ZIH404	4
			FLOW SPLITTER GATE #4 CLOSE INDICATOR		X						RTU0250D	XT0250ZIL404	4
			CLARIFIER RAKE DRIVE #1 CONTR		X				REUSE	EXISTING	RTU0250D	YT0250HS431	2
			CLARIFIER DRIVE #1 MODE		X				REUSE	EXISTING	RTU0250D	XT0250XLA431	2
			CLARIFIER DRIVE #1 STATUS		X				REUSE	EXISTING	RTU0250D	XT0250XLR431	2
			CLARIFIER #1 AMMONIA ANALYZER	X					REMOVE	EXISTING	RTU0250D	IT0250NI431	1
			CLARIFIER #1 SLUDGE LOW LEVEL		X				REMOVE	EXISTING	RTU0250D	XT0250LAL431A	1
			CLARIFIER #1 SLUDGE HIGH LEVE		X				REMOVE	EXISTING	RTU0250D	XT0250LAH431B	1
			CLARIFIER #1 SLUDGE HI HI LEV		X				REMOVE	EXISTING	RTU0250D	XT0250LAHH431C	1
			CLARIFIER 1 FAILURE		X				REUSE	EXISTING	RTU0250D	XT0250XLF431	2
			CLARIFIER RAKE DRIVE #2 CONTR				X		REUSE	EXISTING	RTU0250D	YT0250HS432	2
			CLARIFIER DRIVE #2 MODE		X				REUSE	EXISTING	RTU0250D	XT0250XLA432	2
			CLARIFIER DRIVE #2 STATUS		X				REUSE	EXISTING	RTU0250D	XT0250XLR432	2
			CLARIFIER #2 AMMONIA ANALYZER	X					REMOVE	EXISTING	RTU0250D	IT0250NI432	1
			CLARIFIER #2 SLUDGE LOW LEVEL		X				REMOVE	EXISTING	RTU0250D	XT0250LAL432A	1
			CLARIFIER #2 SLUDGE HIGH LEVE		X				REMOVE	EXISTING	RTU0250D	XT0250LAH432B	1
			CLARIFIER #2 SLUDGE HI HI LEV		X				REMOVE	EXISTING	RTU0250D	XT0250LAHH432C	1
			CLARIFIER 2 FAILURE		X				REUSE	EXISTING	RTU0250D	XT0250XLF432	2
			CLARIFIER RAKE DRIVE #3 CONTR				X		REUSE	EXISTING	RTU0250D	YT0250HS433	2
			CLARIFIER DRIVE #3 MODE		X				REUSE	EXISTING	RTU0250D	XT0250XLA433	2
			CLARIFIER DRIVE #3 STATUS		X				REUSE	EXISTING	RTU0250D	XT0250XLR433	2
			CLARIFIER #3 SLUDGE LOW LEVEL		X				REMOVE	EXISTING	RTU0250D	XT0250LAL433A	1
			CLARIFIER #3 SLUDGE HIGH LEVE		X				REMOVE	EXISTING	RTU0250D	XT0250LAH433B	1

LPC GROUP	PROCESS	PLC	POINT DESCRIPTION	POINT TYPE					FIELD DEVICE		POINT IDENTIFICATION		NOTES
				AI	DI	AO	DO	SW		TYPE	RTU	POINT NAME	
LPC-400	CLARIFICATION	REPLACE EXISTING WITH NEW SIEMENS S7 PLC	CLARIFIER #3 SLUDGE HI HI LEV		X				REMOVE	EXISTING	RTU0250D	XT0250LAHH433C	1
			CLARIFIER DRIVE #3 TORQUE	X					REUSE	EXISTING	RTU0250D	IT0250NI433	2
			CLARIFIER 3 FAILURE		X				REUSE	EXISTING	RTU0250D	XT0250XLF433	2
			CLARIFIER RAKE DRIVE #4 CONTR				X		REUSE	EXISTING	RTU0250D	YT0250HS434	2
			CLARIFIER DRIVE #4 MODE		X				REUSE	EXISTING	RTU0250D	XT0250XLA434	2
			CLARIFIER DRIVE #4 STATUS		X				REUSE	EXISTING	RTU0250D	XT0250XLR434	2
			CLARIFIER #4 SLUDGE LOW LEVEL		X				REMOVE	EXISTING	RTU0250D	XT0250LAL434A	1
			CLARIFIER #4 SLUDGE HIGH LEVE		X				REMOVE	EXISTING	RTU0250D	XT0250LAH434B	1
			CLARIFIER #4 SLUDGE HI HI LEV		X				REMOVE	EXISTING	RTU0250D	XT0250LAHH434C	1
			CLARIFIER DRIVE #4 TORQUE	X					REUSE	EXISTING	RTU0250D	IT0250NI434	2
			CLARIFIER 4 FAILURE		X				REUSE	EXISTING	RTU0250D	XT0250XLF434	2
	RAS TRANSFER		RAS WW LEVEL CONTROLLER INPUT				X		REUSE	EXISTING	RTU0250D	YT0250PVS400	2
			RAS WET WELL LEVEL CONTROL				X		REUSE	EXISTING	RTU0250D	YT0250SS400	2
			RAS WW LEVEL CONTROLLER AUTO		X				REUSE	EXISTING	RTU0250D	XT0250XLA400A	2
			RAS WW LEVEL CONTROLLER GAIN			X			REUSE	EXISTING	RTU0250D	OT0250GN400	2
			RAS WW LEVEL CONTROLLER RESET			X			REUSE	EXISTING	RTU0250D	OT0250RS400	2
			RAS BASIN LEVEL P.V. (RTU0250D)	X					REUSE	EXISTING	RTU0250D	IT0250LPV400	2
			RAS WETWELL A LEVEL	X					REUSE	EXISTING	RTU0250D	IT0250LI400A	2
			RAS WETWELL B LEVEL	X					REUSE	EXISTING	RTU0250D	IT0250LI400B	2
			RAS 1 FLOW SET POINT			X			REUSE	EXISTING	RTU0250D	OT0250FSP401	2
			RAS 2 FLOW CONTROLLER GAIN			X			REUSE	EXISTING	RTU0250D	OT0250GN401	2
			RAS 1 FLOW CONTROLLER RESET			X			REUSE	EXISTING	RTU0250D	OT0250RS401	2
			RAS 2 FLOW SET POINT			X			REUSE	EXISTING	RTU0250D	OT0250FSP402	2
			RAS 4 FLOW CONTROLLER GAIN			X			REUSE	EXISTING	RTU0250D	OT0250GN402	2
			RAS 2 FLOW CONTROLLER RESET			X			REUSE	EXISTING	RTU0250D	OT0250RS402	2
			RAS 3 FLOW SET POINT			X			REUSE	EXISTING	RTU0250D	OT0250FSP403	2
			RAS 3 FLOW CONTROLLER GAIN			X			REUSE	EXISTING	RTU0250D	OT0250GN403	2
			RAS 3 FLOW CONTROLLER RESET			X			REUSE	EXISTING	RTU0250D	OT0250RS403	2
			RAS 4 FLOW SET POINT			X			REUSE	EXISTING	RTU0250D	OT0250FSP404	2
			RAS 1 FLOW CONTROLLER GAIN			X			REUSE	EXISTING	RTU0250D	OT0250GN404	2
			RAS 4 FLOW CONTROLLER RESET			X			REUSE	EXISTING	RTU0250D	OT0250RS404	2
			RAS FLOW #1	X					REUSE	EXISTING	RTU0250D	IT0250FI401	2
			RAS FLOW #2	X					REUSE	EXISTING	RTU0250D	IT0250FI402	2
			RAS FLOW #3	X					REUSE	EXISTING	RTU0250D	IT0250FI403	2
			RAS FLOW #4	X					REUSE	EXISTING	RTU0250D	IT0250FI404	2
			RAS 1 FLOW CONTROL AUTO				X		REUSE	EXISTING	RTU0250D	YT0250SS401	2
			RAS 2 FLOW CONTROL AUTO				X		REUSE	EXISTING	RTU0250D	YT0250SS402	2
			RAS 3 FLOW CONTROL AUTO				X		REUSE	EXISTING	RTU0250D	YT0250SS403	2
			RAS 4 FLOW CONTROL AUTO				X		REUSE	EXISTING	RTU0250D	YT0250SS404	2
			RAS 1 FLOW CONTROLLER MODE AU		X				REUSE	EXISTING	RTU0250D	XT0250XLA401A	2

LPC GROUP	PROCESS	PLC	POINT DESCRIPTION	POINT TYPE					FIELD DEVICE		POINT IDENTIFICATION		NOTES
				AI	DI	AO	DO	SW		TYPE	RTU	POINT NAME	
LPC-400	RAS TRANSFER	REPLACE EXISTING WITH NEW SIEMENS S7 PLC	RAS 2 FLOW CONTROLLER MODE AU		X				REUSE	EXISTING	RTU0250D	XT0250XLA402A	2
			RAS 3 FLOW CONTROLLER MODE AU		X				REUSE	EXISTING	RTU0250D	XT0250XLA403A	2
			RAS 4 FLOW CONTROLLER MODE AU		X				REUSE	EXISTING	RTU0250D	XT0250XLA404A	2
			STAGE 1 AIR LIFT FCV #1 CONTROL			X			REUSE	EXISTING	RTU0250D	OT0250ZC401	2
			STAGE 1 AIR LIFT FCV #2 CONTROL			X			REUSE	EXISTING	RTU0250D	OT0250ZC402	2
			STAGE 1 AIR LIFT FCV #3 CONTROL			X			REUSE	EXISTING	RTU0250D	OT0250ZC403	2
			STAGE 1 AIR LIFT FCV #4 CONTROL			X			REUSE	EXISTING	RTU0250D	OT0250ZC404	2
			STAGE 1 AIR LIFT FCV #1 MODE		X				REUSE	EXISTING	RTU0250D	XT0250XLA401	2
			STAGE 1 AIR LIFT FCV #2 MODE		X				REUSE	EXISTING	RTU0250D	XT0250XLA402	2
			STAGE 1 AIR LIFT FCV #3 MODE		X				REUSE	EXISTING	RTU0250D	XT0250XLA403	2
			STAGE 1 AIR LIFT FCV #4 MODE		X				REUSE	EXISTING	RTU0250D	XT0250XLA404	2
			STAGE 1 AIR LIFT FCV #1 POSIT	X					REUSE	EXISTING	RTU0250D	IT0250ZI401	2
			STAGE 1 AIR LIFT FCV #2 POSIT	X					REUSE	EXISTING	RTU0250D	IT0250ZI402	2
			STAGE 1 AIR LIFT FCV #3 POSIT	X					REUSE	EXISTING	RTU0250D	IT0250ZI403	2
			STAGE 1 AIR LIFT FCV #4 POSIT	X					REUSE	EXISTING	RTU0250D	IT0250ZI404	2
			STAGE 1 ALP AIR FLOW	X					REUSE	EXISTING	RTU0250D	IT0250FI330	2
			STAGE 1 DIFFERENTIAL PRESSURE	X					REUSE	EXISTING	RTU0250D	IT0250DPI330	2
			RAS WETWELL A SOLIDS	X					REUSE	EXISTING	RTU0250D	IT0250OI420A	2
			RAS WETWELL B SOLIDS	X					REUSE	EXISTING	RTU0250D	IT0250OI420B	2
	WAS TRANSFER		WAS FLOW	X					REUSE	EXISTING	RTU0250D	IT0250FI420	2
			WAS TOTALIZER RESET				X		REUSE	EXISTING	RTU0250D	YT0250PB420	2
			TOTAL WASTED SLUDGE MASS	X					REUSE	EXISTING	RTU0250D	IT0250MQI420	2
			WAS PUMP CONTROL AUTO				X		REUSE	EXISTING	RTU0250D	YT0250SS420	2
			WAS PUMP SEQUENCER FAIL		X				REUSE	EXISTING	RTU0250D	XT0250XLF420	2
			WAS PUMP #1 CONTROL				X		REUSE	EXISTING	RTU0250D	YT0250HS421	2
			WAS PUMP 1 CONTROL START				X		REUSE	EXISTING	RTU0250D	YT0250HS421A	2
			WAS PUMP 1		X				REUSE	EXISTING	RTU0250D	XT0250XLF421	2
			WAS PUMP 1 RUN TIME	X					REUSE	EXISTING	RTU0250D	IT0250RNT421	2
			WAS PUMP 1 STOPPED		X				REUSE	EXISTING	RTU0250D	XT0250XLS421	2
			WAS PUMP 1 FORWARD/REVERSE		X				REUSE	EXISTING	RTU0250D	XT0250SS421	2
			WAS PUMP #1 MODE		X				REUSE	EXISTING	RTU0250D	XT0250XLA421	2
			WAS PUMP #1 RUNNING FRD/REV		X				REUSE	EXISTING	RTU0250D	XT0250XLR421A	2
			WAS PUMP #1 RUNNING REVERSE		X				REUSE	EXISTING	RTU0250D	XT0250XLR421B	2
			WAS PUMP #1 JAMMED		X				REUSE	EXISTING	RTU0250D	XT0250XLJ421	2
			WAS PUMP #2 CONTROL				X		REUSE	EXISTING	RTU0250D	YT0250HS422	2
			WAS PUMP 2 CONTROL START				X		REUSE	EXISTING	RTU0250D	YT0250HS422A	2
			WAS PUMP 2		X				REUSE	EXISTING	RTU0250D	XT0250XLF422	2
			WAS PUMP 2 RUN TIME	X					REUSE	EXISTING	RTU0250D	IT0250RNT422	2
			WAS PUMP 2 STOPPED		X				REUSE	EXISTING	RTU0250D	XT0250XLS422	2
			WAS PUMP 2 FORWARD/REVERSE		X				REUSE	EXISTING	RTU0250D	XT0250SS422	2

LPC GROUP	PROCESS	PLC	POINT DESCRIPTION	POINT TYPE					FIELD DEVICE		POINT IDENTIFICATION		NOTES
				AI	DI	AO	DO	SW		TYPE	RTU	POINT NAME	
LPC-400	WAS TRANSFER	REPLACE EXISTING WITH NEW SIEMENS S7 PLC	WAS PUMP #2 MODE		X				REUSE	EXISTING	RTU0250D	XT0250XLA422	2
			WAS PUMP #2 RUNNING FRD/REV		X				REUSE	EXISTING	RTU0250D	XT0250XLR422A	2
			WAS PUMP #2 RUNNING REVERSE		X				REUSE	EXISTING	RTU0250D	XT0250XLR422B	2
			WAS PUMP #2 JAMMED		X				REUSE	EXISTING	RTU0250D	XT0250XLJ422	2
			WAS PUMP #3 CONTROL				X		REUSE	EXISTING	RTU0250D	YT0250HS423	2
			WAS PUMP 3 CONTROL START				X		REUSE	EXISTING	RTU0250D	YT0250HS423A	2
			WAS PUMP 3		X				REUSE	EXISTING	RTU0250D	XT0250XLF423	2
			WAS PUMP 3 RUN TIME	X					REUSE	EXISTING	RTU0250D	IT0250RNT423	2
			WAS PUMP 3 STOPPED		X				REUSE	EXISTING	RTU0250D	XT0250XLS423	2
			WAS PUMP 3 FORWARD/REVERSE		X				REUSE	EXISTING	RTU0250D	XT0250SS423	2
			WAS PUMP #3 MODE		X				REUSE	EXISTING	RTU0250D	XT0250XLA423	2
			WAS PUMP #3 RUNNING FRD/REV		X				REUSE	EXISTING	RTU0250D	XT0250XLR423A	2
			WAS PUMP #3 RUNNING REVERSE		X				REUSE	EXISTING	RTU0250D	XT0250XLR423B	2
			WAS PUMP #3 JAMMED		X				REUSE	EXISTING	RTU0250D	XT0250XLJ423	2
			WAS PUMP #4 CONTROL				X		REUSE	EXISTING	RTU0250D	YT0250HS424	2
			WAS PUMP 4 CONTROL START				X		REUSE	EXISTING	RTU0250D	YT0250HS424A	2
			WAS PUMP 4		X				REUSE	EXISTING	RTU0250D	XT0250XLF424	2
			WAS PUMP 4 RUN TIME	X					REUSE	EXISTING	RTU0250D	IT0250RNT424	2
			WAS PUMP 4 STOPPED		X				REUSE	EXISTING	RTU0250D	XT0250XLS424	2
			WAS PUMP 4 FORWARD/REVERSE		X				REUSE	EXISTING	RTU0250D	XT0250SS424A	2
			WAS PUMP 4 FORWARD/REVERSE		X				REUSE	EXISTING	RTU0250D	XT0250SS424B	2
			WAS PUMP #4 MODE		X				REUSE	EXISTING	RTU0250D	XT0250XLA424	2
			WAS PUMP #4 RUNNING FRDREV		X				REUSE	EXISTING	RTU0250D	XT0250XLR424A	2
			WAS PUMP #4 RUNNING REVERSE		X				REUSE	EXISTING	RTU0250D	XT0250XLR424B	2
			WAS PUMP #4 JAMMED		X				REUSE	EXISTING	RTU0250D	XT0250XLJ424	2

LPC GROUP	PROCESS	PLC	POINT DESCRIPTION	POINT TYPE					FIELD DEVICE		POINT IDENTIFICATION		NOTES
				AI	DI	AO	DO	SW		TYPE	RTU	POINT NAME	
LPC-400	SCREENING	REPLACE EXISTING WITH NEW SIEMENS S7 PLC	SCREEN 1 STATUS		X				REUSE	EXISTING	RTU0250D	XT0250YL201	2
			SCREEN 1 HI TORQUE ALARM		X				REUSE	EXISTING	RTU0250D	XT0250XA201	2
			SCREEN 1 HI DIFFERENTIAL LEVEL ALARM		X				REUSE	EXISTING	RTU0250D	XT0250XA201A	2
			SCREEN 1 OVERLOAD ALARM		X				REUSE	EXISTING	RTU0250D	XT0250XA201B	2
			SCREEN 2 STATUS		X				REUSE	EXISTING	RTU0250D	XT0250YL202	2
			SCREEN 2 HI TORQUE ALARM		X				REUSE	EXISTING	RTU0250D	XT0250XA202	2
			SCREEN 2 HI DIFFERENTIAL ALARM		X				REUSE	EXISTING	RTU0250D	XT0250XA202A	2
			SCREEN 2 OVERLOAD ALARM		X				REUSE	EXISTING	RTU0250D	XT0250XA202B	2
			SCREEN CONVEYOR STATUS		X				REUSE	EXISTING	RTU0250D	XT0250YL203	2
			SCREEN NO. 1 RUN TIME	X					REUSE	EXISTING	RTU0250D	IT0250QR201	2
			SCREEN NO. 2 RUN TIME	X					REUSE	EXISTING	RTU0250D	IT0250QR202	2
			SCREEN CONVEYOR RUN TIME	X					REUSE	EXISTING	RTU0250D	IT0250QR203	2
			FLUSH W SOLENOID VLV ALTERNATING TIME	X					REUSE	EXISTING	RTU0250D	IT0250TMR222	2
			CHANNEL 1 DIFFERENTIAL LEVEL	X					NEW	LEVEL SENSOR	RTU0250D	IT0250LI201	3
			CHANNEL 2 DIFFERENTIAL LEVEL	X					NEW	LEVEL SENSOR	RTU0250D	IT0250LI202	3
			EQUIPMENT FAIL		X				REUSE	EXISTING	RTU0250D	XT0250XA203	2
			BYPASS CHANNEL HIGH LEVEL		X				NEW	LEVEL SENSOR	RTU0250D	XT0250LAH204	3
	GRIT REMOVAL		GRIT DRIVE STATUS		X				REMOVE	EXISTING	RTU0250D	XT0250YL207	1
			GRIT DRIVE FAIL		X				REMOVE	EXISTING	RTU0250D	XT0250XA207	1
			MOMENTARY START PB FROM HMI (SCADA)				X		REMOVE	EXISTING	RTU0250D	YT0250MSS00	1
			INLET VALVE OPEN ALARM		X				REMOVE	EXISTING	RTU0250D	XT0250ZSOA210	1
			INLET VALVE CLOSE ALARM		X				REMOVE	EXISTING	RTU0250D	XT0250ZSCA210	1
			GRIT CLASSIFIER AUTO/MANUAL				X		REMOVE	EXISTING	RTU0250D	YT0250HSS09A	1
			GRIT PUMP 221 AUTO/MANUAL				X		REMOVE	EXISTING	RTU0250D	YT0250HSS21A	1
			GRIT PUMP 222 AUTO/MANUAL				X		REMOVE	EXISTING	RTU0250D	YT0250HSS22A	1
			INLET VALVE CLOSE		X				REMOVE	EXISTING	RTU0250D	XT0250ZSC210	1
			INLET VALVE OPEN		X				REMOVE	EXISTING	RTU0250D	XT0250ZSO210	1
			INLET VALVE IN REMOTE MODE (PLC CONTROL)		X				REMOVE	EXISTING	RTU0250D	XT0250HS210	1
			GRIT CLASSIFIER STATUS		X				REMOVE	EXISTING	RTU0250D	XT0250YL209	1
			GRIT CLASSIFIER FAIL		X				REMOVE	EXISTING	RTU0250D	XT0250XA209	1
			GRIT CLASSIFIER REMOTE STATUS		X				REMOVE	EXISTING	RTU0250D	XT0250HS209	1
			GRIT PUMP 221 STATUS		X				REMOVE	EXISTING	RTU0250D	XT0250YL221	1
			GRIT PUMP 221 FAIL		X				REMOVE	EXISTING	RTU0250D	XT0250XA221	1
			GRIT PUMP 221 REMOTE STATUS		X				REMOVE	EXISTING	RTU0250D	XT0250HS221	1
			GRIT PUMP 222 STATUS		X				REMOVE	EXISTING	RTU0250D	XT0250YL222	1
			GRIT PUMP 222 FAIL		X				REMOVE	EXISTING	RTU0250D	XT0250XA222	1
			GRIT PUMP 222 REMOTE STATUS		X				REMOVE	EXISTING	RTU0250D	XT0250HS222	1
			GRIT CHAMBER SOLENOID VALVE				X		REMOVE	EXISTING	RTU0250D	YT0250SOV208	1
			INLET VALVE OPEN (NOT AVAILABLE)				X		REMOVE	EXISTING	RTU0250D	YT0250HSO210	1
			INLET VALVE CLOSE (NOT AVAILABLE)				X		REMOVE	EXISTING	RTU0250D	YT0250HSC210	1

LPC GROUP	PROCESS	PLC	POINT DESCRIPTION	POINT TYPE					FIELD DEVICE		POINT IDENTIFICATION		NOTES
				AI	DI	AO	DO	SW		TYPE	RTU	POINT NAME	
LPC-400	GRIT REMOVAL	REPLACE EXISTING WITH NEW SIEMENS S7 PLC	GRIT CLASSIFIER START/STOP				X		REMOVE	EXISTING	RTU0250D	YT0250HS209A	1
			GRIT CLASSIFIER CONTROL SV-209				X		REMOVE	EXISTING	RTU0250D	YT0250KIC209	1
			GRIT PUMP 221 START/STOP				X		REMOVE	EXISTING	RTU0250D	YT0250HS221A	1
			GRIT PUMP SUCTION SVA-221 OPEN/CLOSE				X		REMOVE	EXISTING	RTU0250D	YT0250KIC221	1
			GRIT PUMP DISCHARGE SVB-221 VALVE OP/CL				X		REMOVE	EXISTING	RTU0250D	YT0250KIC221A	1
			GRIT PUMP 222 START/STOP				X		REMOVE	EXISTING	RTU0250D	YT0250HS222A	1
			GRIT PUMP SUCTION SVA-222 VALVE OP/CL				X		REMOVE	EXISTING	RTU0250D	YT0250KIC222	1
			GRIT PUMP DISCHARGE SVB-222 VALVE OP/CL				X		REMOVE	EXISTING	RTU0250D	YT0250KIC222A	1
			INLET VALVE POSITION		X				REMOVE	EXISTING	RTU0250D	XT0250ZSCO210	1
			STAGE 2 AIR LIFT FCU CONTROL (RTUD)			X			REMOVE	EXISTING	RTU0250D	OT0250ZC400D	1
			FLUIDIZING TIME (BEFORE OPEN INLET VLVE)	X					REMOVE	EXISTING	RTU0250D	IT0250TMR220	1
			FLUSHING (S&D) VALVE WAITING TIME	X					REMOVE	EXISTING	RTU0250D	IT0250TMR224	1
			FLUSH VLV OPEN. TIME BEFORE STARTING PMP	X					REMOVE	EXISTING	RTU0250D	IT0250TMR226	1
			FLUSH VLV OPEN. TIME AFTER STOPPING PUMP	X					REMOVE	EXISTING	RTU0250D	IT0250TMR228	1
			TIME BEFORE TURNING OFF GRIT CLASSIFIER	X					REMOVE	EXISTING	RTU0250D	IT0250TMR230	1
			GRIT SYST MASTER CYCLE TIME (UP TO 2 HRS	X					REMOVE	EXISTING	RTU0250D	IT0250TMR200	1
			GRIT PUMP RUNNING TIME	X					REMOVE	EXISTING	RTU0250D	IT0250TMR202	1
			GRIT DRIVE RUN TIME	X					REMOVE	EXISTING	RTU0250D	IT0250QR207	1
			GRIT CLASSIFIER RUN TIME	X					REMOVE	EXISTING	RTU0250D	IT0250QR209	1
			GRIT PUMP 221 RUN TIME	X					REMOVE	EXISTING	RTU0250D	IT0250QR221	1
			GRIT PUMP 222 RUN TIME	X					REMOVE	EXISTING	RTU0250D	IT0250QR222	1

LPC GROUP	PROCESS	PLC	POINT DESCRIPTION	POINT TYPE					FIELD DEVICE		POINT IDENTIFICATION		NOTES
				AI	DI	AO	DO	SW		TYPE	RTU	POINT NAME	
LPC-200A	GRIT REMOVAL	NEW EQUIPMENT MFG PLC CONTOL SYSTEM	**GRIT SYS #1 INLET GATE OPEN**		X				NEW	VALVE ACTUATOR	RTU0250J1	XT0250YH202A	6
			GRIT SYS #1 INLET GATE CLOSE		X						RTU0250J1	XT0250YL207A	6
			GRIT SYS #1 CYCLE START		X				NEW	MOMENTARY SWITCH	RTU0250J1	XT0250HMS215A	5
			GRIT SYS #1 CYCLE RESET		X				NEW	MOMENTARY SWITCH	RTU0250J1	XT0250HMS216A	5
			GRIT SYS #1 ALARM				X		NEW	RELAY	RTU0250J1	YT0250ZA207A	5
			GRIT SYS #1 ALARM RESET		X				NEW	MOMENTARY SWITCH	RTU0250J1	XT0250HMS217A	5
			GRIT SYS #1 PADDLE DRIVE AUTO		X				NEW	HAND SWITCH	RTU0250J1	XT0250HS200A	5
			GRIT SYS #1 PADDLE DRIVE STATUS		X				NEW	MOTOR STARTER	RTU0250J1	XT0250MY201A	5
			GRIT SYS #1 PADDLE DRIVE FAULT		X						RTU0250J1	XT0250MA212A	5
			GRIT SYS #1 PADDLE DRIVE RUN				X				RTU0250J1	YT0250MZ200A	5
			GRIT SYS #1 GRIT PUMP HAND		X				NEW	HAND SWITCH	RTU0250J1	XT0250HS203A	5
			GRIT SYS #1 GRIT PUMP AUTO		X						RTU0250J1	XT0250HS204A	5
			GRIT SYS #1 GRIT PUMP FAULT		X				NEW	MOTOR STARTER	RTU0250J1	XT0250MA213A	5
			GRIT SYS #1 GRIT PUMP STATUS		X						RTU0250J1	XT0250MY205A	5
			GRIT SYS #1 GRIT PUMP RUN				X				RTU0250J1	YT0250MZ201A	5
			GRIT SYS #1 VAC PRIME				X		NEW	CONTACTOR	RTU0250J1	YT0250YZ203A	5
			GRIT SYS #1 PINCH VALVE				X		NEW	CONTACTOR	RTU0250J1	YT0250YZ204A	5
			GRIT SYS #1 PRIMING SENS		X				NEW	PRIMING SENSOR	RTU0250J1	XT0250XY206A	5
			GRIT SYS #1 PRIMING SENS PWR RLY				X		NEW	RELAY	RTU0250J1	YT0250YZ202A	5
			GRIT SYS #1 CONVEYER HAND		X				NEW	HAND SWITCH	RTU0250J1	XT0250HS208A	5
			GRIT SYS #1 CONVEYER AUTO		X						RTU0250J1	XT0250HS209A	5
			GRIT SYS #1 CONVEYER FAULT		X				NEW	MOTOR STARTER	RTU0250J1	XT0250MA214A	5
			GRIT SYS #1 CONVEYER STATUS		X						RTU0250J1	XT0250MY210A	5
			GRIT SYS #1 CONVEYER RUN				X				RTU0250J1	YT0250MZ205A	5
			GRIT SYS #1 FLUSH WATER HAND		X				NEW	HAND SWITCH	RTU0250J1	XT0250HS218A	5
			GRIT SYS #1 FLUSH WATER AUTO		X						RTU0250J1	XT0250HS219A	5
			GRIT SYS #1 FLUSH WATER VALVE				X		NEW	RELAY	RTU0250J1	YT0250YZ206A	5
			GRIT SYS #1 SPARE DI		X				LABEL	AS SPARE	RTU0250J1	XT0250XX211A	5
			GRIT SYS #1 SPARE DO				X		LABEL	AS SPARE	RTU0250J1	YT0250XZ208A	5
			GRIT SYS #1 SPARE DO				X		LABEL	AS SPARE	RTU0250J1	YT0250XZ209A	5
			GRIT SYS #1 SPARE DO				X		LABEL	AS SPARE	RTU0250J1	YT0250XZ210A	5
			GRIT SYS #1 SPARE DO				X		LABEL	AS SPARE	RTU0250J1	YT0250XZ211A	5
			GRIT SYS #1 OUTLET GATE OPEN		X				NEW	VALVE ACTUATOR	RTU0250J1	XT0250XX220A	6
			GRIT SYS #1 OUTLET GATE CLOSE		X						RTU0250J1	XT0250XX221A	6
			GRIT SYS #1 SPARE DI		X				LABEL	AS SPARE	RTU0250J1	XT0250XX222A	5
			GRIT SYS #1 SPARE DI		X				LABEL	AS SPARE	RTU0250J1	XT0250XX223A	5

LPC GROUP	PROCESS	PLC	POINT DESCRIPTION	POINT TYPE					FIELD DEVICE		POINT IDENTIFICATION		NOTES
				AI	DI	AO	DO	SW		TYPE	RTU	POINT NAME	
LPC-200B	GRIT REMOVAL	NEW EQUIPMENT MFG PLC CONTOL SYSTEM	GRIT SYS #2 INLET GATE OPEN		X				NEW	VALVE ACTUATOR	RTU0250J2	XT0250YH202B	6
			GRIT SYS #2 INLET GATE CLOSE		X						RTU0250J2	XT0250YL207B	6
			GRIT SYS #2 CYCLE START		X				NEW	MOMENTARY SWITCH	RTU0250J2	XT0250HMS215B	5
			GRIT SYS #2 CYCLE RESET		X				NEW	MOMENTARY SWITCH	RTU0250J2	XT0250HMS216B	5
			GRIT SYS #2 ALARM				X		NEW	RELAY	RTU0250J2	YT0250ZA207B	5
			GRIT SYS #2 ALARM RESET		X				NEW	MOMENTARY SWITCH	RTU0250J2	XT0250HMS217B	5
			GRIT SYS #2 PADDLE DRIVE AUTO		X				NEW	HAND SWITCH	RTU0250J2	XT0250HS200B	5
			GRIT SYS #2 PADDLE DRIVE STATUS		X				NEW	MOTOR STARTER	RTU0250J2	XT0250MY201B	5
			GRIT SYS #2 PADDLE DRIVE FAULT		X						RTU0250J2	XT0250MA212B	5
			GRIT SYS #2 PADDLE DRIVE RUN				X				RTU0250J2	YT0250MZ200B	5
			GRIT SYS #2 GRIT PUMP HAND		X				NEW	HAND SWITCH	RTU0250J2	XT0250HS203B	5
			GRIT SYS #2 GRIT PUMP AUTO		X						RTU0250J2	XT0250HS204B	5
			GRIT SYS #2 GRIT PUMP FAULT		X				NEW	MOTOR STARTER	RTU0250J2	XT0250MA213B	5
			GRIT SYS #2 GRIT PUMP STATUS		X						RTU0250J2	XT0250MY205B	5
			GRIT SYS #2 GRIT PUMP RUN				X				RTU0250J2	YT0250MZ201B	5
			GRIT SYS #2 VAC PRIME				X		NEW	CONTACTOR	RTU0250J2	YT0250YZ203B	5
			GRIT SYS #2 PINCH VALVE				X		NEW	CONTACTOR	RTU0250J2	YT0250YZ204B	5
			GRIT SYS #2 PRIMING SENS		X				NEW	PRIMING SENSOR	RTU0250J2	XT0250XY206B	5
			GRIT SYS #2 PRIMING SENS PWR RLY				X		NEW	RELAY	RTU0250J2	YT0250YZ202B	5
			GRIT SYS #2 CONVEYER HAND		X				NEW	HAND SWITCH	RTU0250J2	XT0250HS208B	5
			GRIT SYS #2 CONVEYER AUTO		X						RTU0250J2	XT0250HS209B	5
			GRIT SYS #2 CONVEYER FAULT		X				NEW	MOTOR STARTER	RTU0250J2	XT0250MA214B	5
			GRIT SYS #2 CONVEYER STATUS		X						RTU0250J2	XT0250MY210B	5
			GRIT SYS #2 CONVEYER RUN				X				RTU0250J2	YT0250MZ205B	5
			GRIT SYS #2 FLUSH WATER HAND		X				NEW	HAND SWITCH	RTU0250J2	XT0250HS218B	5
			GRIT SYS #2 FLUSH WATER AUTO		X						RTU0250J2	XT0250HS219B	5
			GRIT SYS #2 FLUSH WATER VALVE				X		NEW	RELAY	RTU0250J2	YT0250YZ206B	5
			GRIT SYS #2 SPARE DI		X				LABEL	AS SPARE	RTU0250J2	XT0250XX211B	5
			GRIT SYS #2 SPARE DO				X		LABEL	AS SPARE	RTU0250J2	YT0250XZ208B	5
			GRIT SYS #2 SPARE DO				X		LABEL	AS SPARE	RTU0250J2	YT0250XZ209B	5
			GRIT SYS #2 SPARE DO				X		LABEL	AS SPARE	RTU0250J2	YT0250XZ210B	5
			GRIT SYS #2 SPARE DO				X		LABEL	AS SPARE	RTU0250J2	YT0250XZ211B	5
			GRIT SYS #2 OUTLET GATE OPEN		X				NEW	VALVE ACTUATOR	RTU0250J2	XT0250XX220B	6
			GRIT SYS #2 OUTLET GATE CLOSE		X						RTU0250J2	XT0250XX220B	6
			GRIT SYS #2 SPARE DI		X				LABEL	AS SPARE	RTU0250J2	XT0250XX220B	5
			GRIT SYS #2 SPARE DI		X				LABEL	AS SPARE	RTU0250J2	XT0250XX220B	5

LPC GROUP	PROCESS	PLC	POINT DESCRIPTION	POINT TYPE					FIELD DEVICE		POINT IDENTIFICATION		NOTES
				AI	DI	AO	DO	SW		TYPE	RTU	POINT NAME	
LPC-700/800	WASTE SLUDGE DIGESTION & THICKENING	REPLACE EXISTING WITH NEW SIEMENS S7 PLC	PT SLUDGE PUMP 1 CONTROL				X		REUSE	EXISTING	RTU0250G	YT0250HS721A	2
			PT SLUDGE PUMP 2 CONTROL				X		REUSE	EXISTING	RTU0250G	YT0250HS722A	2
			PT SLUDGE PUMP 3 CONTROL				X		REUSE	EXISTING	RTU0250G	YT0250HS723A	2
			STS PUMP 1 CONTROL				X		REUSE	EXISTING	RTU0250G	YT0250HS731A	2
			STS PUMP 2 CONTROL				X		REUSE	EXISTING	RTU0250G	YT0250HS732A	2
			STS PUMP 3 CONTROL				X		REUSE	EXISTING	RTU0250G	YT0250HS733A	2
			ROTARY SCREEN 1 CONTROL				X		REUSE	EXISTING	RTU0250G	YT0250HS751A	2
			ROTARY SCREEN 2 CONTROL				X		REUSE	EXISTING	RTU0250G	YT0250HS752A	2
			ROTARY SCREEN 3 CONTROL				X		REUSE	EXISTING	RTU0250G	YT0250HS753A	2
			SCREEN CONVEYOR CONTROL				X		REUSE	EXISTING	RTU0250G	YT0250HS757A	2
			DS PUMP 2 CONTROL				X		REUSE	EXISTING	RTU0250G	YT0250HS822A	2
			DS PUMP 3 CONTROL				X		REUSE	EXISTING	RTU0250G	YT0250HS823A	2
			GRAVITY THICKENER 1 FAILURE				X		REUSE	EXISTING	RTU0250G	YT0250XLF701	2
			GRAVITY THICKENER 2 FAILURE				X		REUSE	EXISTING	RTU0250G	YT0250XLF702	2
			PT SLUDGE PUMP 1 FAILURE				X		REUSE	EXISTING	RTU0250G	YT0250XLF721	2
			PT SLUDGE PUMP 2 FAILURE				X		REUSE	EXISTING	RTU0250G	YT0250XLF722	2
			PT SLUDGE PUMP 3 FAILURE				X		REUSE	EXISTING	RTU0250G	YT0250XLF723	2
			ST SLUDGE PUMP 1 FAILURE				X		REUSE	EXISTING	RTU0250G	YT0250XLF731	2
			ST SLUDGE PUMP 2 FAILURE				X		REUSE	EXISTING	RTU0250G	YT0250XLF732	2
			ST SLUDGE PUMP 3 FAILURE				X		REUSE	EXISTING	RTU0250G	YT0250XLF733	2
			ROTARY SCREEN 1 FAILURE				X		REUSE	EXISTING	RTU0250G	YT0250XLF751	2
			ROTARY SCREEN 2 FAILURE				X		REUSE	EXISTING	RTU0250G	YT0250XLF752	2
			ROTARY SCREEN 3 FAILURE				X		REUSE	EXISTING	RTU0250G	YT0250XLF753	2
			ROTARY SCREEN CONVEYOR FAILUR				X		REUSE	EXISTING	RTU0250G	YT0250XLF757	2
			DIGESTER SLUDGE PUMP 1 FAILU				X		REUSE	EXISTING	RTU0250G	YT0250XLF821	2
			DIGESTER SLUDGE PUMP 2 FAILU				X		REUSE	EXISTING	RTU0250G	YT0250XLF822	2
			DIGESTER SLUDGE PUMP 3 FAILU				X		REUSE	EXISTING	RTU0250G	YT0250XLF823	2
			THICK.PUMP CONTROL				X		REUSE	EXISTING	RTU0250G	YT0250SS700	2
			SLUDGE TANK PUMP SELECTOR				X		REUSE	EXISTING	RTU0250G	YT0250SS789	2
			PRIM THICKENER MODE R/L		X				REUSE	EXISTING	RTU0250G	XT0250XLA701	2
			PRIM THICKENER STATUS		X				REUSE	EXISTING	RTU0250G	XT0250XLR701	2
			SEC. THICKENER MODE R/L		X				REUSE	EXISTING	RTU0250G	XT0250XLA702	2
			SEC. THICKENER STATUS		X				REUSE	EXISTING	RTU0250G	XT0250XLR702	2
			PRIM THICK SLDG PMP #1 MANUAL		X				REUSE	EXISTING	RTU0250G	XT0250XLA721	2
			PRIM THICK SLDG PMP #1 STATUS		X				REUSE	EXISTING	RTU0250G	XT0250XLR721	2
			PRIM THICK SLDG PMP #2 MANUAL		X				REUSE	EXISTING	RTU0250G	XT0250XLA722	2
			PRIM THICK SLDG PMP #2 STATUS		X				REUSE	EXISTING	RTU0250G	XT0250XLR722	2
			PRIM THICK SLDG PMP #3 MANUAL		X				REUSE	EXISTING	RTU0250G	XT0250XLA723	2
			PRIM THICK SLDG PMP #3 STAUS		X				REUSE	EXISTING	RTU0250G	XT0250XLR723	2
			SEC THICK SLDG PMP #1 MANUAL		X				REUSE	EXISTING	RTU0250G	XT0250XLA731	2

LPC GROUP	PROCESS	PLC	POINT DESCRIPTION	POINT TYPE					FIELD DEVICE		POINT IDENTIFICATION		NOTES
				AI	DI	AO	DO	SW		TYPE	RTU	POINT NAME	
LPC-700/800	WASTE SLUDGE DIGESTION & THICKENING	REPLACE EXISTING WITH NEW SIEMENS S7 PLC	SEC THICK SLDG PMP #1 STATUS		X				REUSE	EXISTING	RTU0250G	XT0250XLR731	2
			SEC THICK SLDG PMP #2 MANUAL		X				REUSE	EXISTING	RTU0250G	XT0250XLA732	2
			SEC THICK SLDG PMP #2 STATUS		X				REUSE	EXISTING	RTU0250G	XT0250XLR732	2
			SEC THICK SLDG PMP #3 MANUAL		X				REUSE	EXISTING	RTU0250G	XT0250XLA733	2
			SEC THICK SLDG PMP #3 STATUS		X				REUSE	EXISTING	RTU0250G	XT0250XLR733	2
			ROTARY SCREEN #1 MODE		X				REUSE	EXISTING	RTU0250G	XT0250XLA751	2
			ROTARY SCREEN #1 STATUS		X				REUSE	EXISTING	RTU0250G	XT0250XLR751	2
			ROTARY SCREEN #2 MODE		X				REUSE	EXISTING	RTU0250G	XT0250XLA752	2
			ROTARY SCREEN #2 STATUS		X				REUSE	EXISTING	RTU0250G	XT0250XLR752	2
			ROTARY SCREEN #3 MODE		X				REUSE	EXISTING	RTU0250G	XT0250XLA753	2
			ROTARY SCREEN #3 STATUS		X				REUSE	EXISTING	RTU0250G	XT0250XLR753	2
			ROTARY SCREEN CONVEYOR MODE		X				REUSE	EXISTING	RTU0250G	XT0250XLA757	2
			ROTARY SCREEN CONVEYOR STATUS		X				REUSE	EXISTING	RTU0250G	XT0250XLR757	2
			DIGESTER #1 INLET SLIDE GATE		X				REMOVE	EXISTING	RTU0250G	XT0250ZSC801A	1
			DIGESTER #1 INLET SLIDE GATE		X				REMOVE	EXISTING	RTU0250G	XT0250ZSP801A	1
			DIGESTER #1 DISCH. SLIDE GAT		X				REMOVE	EXISTING	RTU0250G	XT0250ZSC801B	1
			DIGESTER #1 DISCH. SLIDE GAT		X				REMOVE	EXISTING	RTU0250G	XT0250ZSP801B	1
			DIGESTER #2 INLET SLIDE GATE		X				REMOVE	EXISTING	RTU0250G	XT0250ZSC802A	1
			DIGESTER #2 INLET SLIDE GATE		X				REMOVE	EXISTING	RTU0250G	XT0250ZSP802A	1
			DIGESTER #2 DISCH. SLIDE GAT		X				REMOVE	EXISTING	RTU0250G	XT0250ZSC802B	1
			DIGESTER #2 DISCH. SLIDE GAT		X				REMOVE	EXISTING	RTU0250G	XT0250ZSP802B	1
			DIGESTER #3 INLET SLIDE GATE		X				REMOVE	EXISTING	RTU0250G	XT0250ZSC803A	1
			DIGESTER #3 INLET SLIDE GATE		X				REMOVE	EXISTING	RTU0250G	XT0250ZSP803A	1
			DIGESTER #3 DISCH. SLIDE GAT		X				REMOVE	EXISTING	RTU0250G	XT0250ZSC803B	1
			DIGESTER #3 DISCH. SLIDE GAT		X				REMOVE	EXISTING	RTU0250G	XT0250ZSP803B	1
			DIGESTER #4 INLET SLIDE GATE		X				REMOVE	EXISTING	RTU0250G	XT0250ZSC804A	1
			DIGESTER #4 INLET SLIDE GATE		X				REMOVE	EXISTING	RTU0250G	XT0250ZSP804A	1
			DIGESTER #4 DISCH. SLIDE GAT		X				REMOVE	EXISTING	RTU0250G	XT0250ZSC804B	1
			DIGESTER #4 DISCH. SLIDE GAT		X				REMOVE	EXISTING	RTU0250G	XT0250ZSP804B	1
			DIGESTER #5 INLET SLIDE GATE		X				REMOVE	EXISTING	RTU0250G	XT0250ZSC805A	1
			DIGESTER #5 INLET SLIDE GATE		X				REMOVE	EXISTING	RTU0250G	XT0250ZSP805A	1
			DIGESTER PUMP #1 MODE		X				REUSE	EXISTING	RTU0250G	XT0250XLA821	2
			DIGESTER PUMP #1 STATUS		X				REUSE	EXISTING	RTU0250G	XT0250XLR821	2
			DIGESTER PUMP #2 MODE		X				REUSE	EXISTING	RTU0250G	XT0250XLA822	2
			DIGESTER PUMP #2 STATUS		X				REUSE	EXISTING	RTU0250G	XT0250XLR822	2
			DIGESTER PUMP #3 MODE		X				REUSE	EXISTING	RTU0250G	XT0250XLA823	2
			DIGESTER PUMP #3 STATUS		X				REUSE	EXISTING	RTU0250G	XT0250XLR823	2
			SLUDGE ROTARY SCREEN #4 STATU		X				REUSE	EXISTING	RTU0250G	XT0250XLR754	2
			SLUDGE ROTARY SCREEN #5 STATU		X				REUSE	EXISTING	RTU0250G	XT0250XLR755	2
			SLUDGE ROTARY SCREEN #4 FAILU		X				REUSE	EXISTING	RTU0250G	XT0250XLA754	2

LPC GROUP	PROCESS	PLC	POINT DESCRIPTION	POINT TYPE					FIELD DEVICE		POINT IDENTIFICATION		NOTES
				AI	DI	AO	DO	SW		TYPE	RTU	POINT NAME	
LPC-700/800	WASTE SLUDGE DIGESTION & THICKENING	REPLACE EXISTING WITH NEW SIEMENS S7 PLC	SLUDGE ROTARY SCREEN #5 FAILU		X				REUSE	EXISTING	RTU0250G	XT0250XLA755	2
			SLUDGE ROTARY SCREEN #6 STATU		X				REUSE	EXISTING	RTU0250G	XT0250XLR756	2
			SLUDGE ROTARY SCREEN #6 FAILU		X				REUSE	EXISTING	RTU0250G	XT0250XLA756	2
			PRIMARY THICKENER DRIVE CONTR				X		REUSE	EXISTING	RTU0250G	YT0250HS701	2
			SEC. THICKENER DRIVE CONTROL				X		REUSE	EXISTING	RTU0250G	YT0250HS702	2
			PRIMARY SLUDGE PUMP #1 CONTRO				X		REUSE	EXISTING	RTU0250G	YT0250HS721	2
			PRIMARY SLUDGE PUMP #2 CONTRO				X		REUSE	EXISTING	RTU0250G	YT0250HS722	2
			PRIMARY SLUDGE PUMP #3 CONTRO				X		REUSE	EXISTING	RTU0250G	YT0250HS723	2
			SEC. SLUDGE PUMP #1 CONTROL				X		REUSE	EXISTING	RTU0250G	YT0250HS731	2
			SEC. SLUDGE PUMP #2 CONTROL				X		REUSE	EXISTING	RTU0250G	YT0250HS732	2
			SEC. SLUDGE PUMP #3 CONTROL				X		REUSE	EXISTING	RTU0250G	YT0250HS733	2
			ROTARY SCREEN #1 CONTROL				X		REUSE	EXISTING	RTU0250G	YT0250HS751	2
			ROTARY SCREEN #2 CONTROL				X		REUSE	EXISTING	RTU0250G	YT0250HS752	2
			ROTARY SCREEN #3 CONTROL				X		REUSE	EXISTING	RTU0250G	YT0250HS753	2
			ROTARY SCREEN CONVEYOR CONTRO				X		REUSE	EXISTING	RTU0250G	YT0250HS757	2
			DIGESTER PUMP #1 CONTROL				X		REUSE	EXISTING	RTU0250G	YT0250HS821	2
			DIGESTER PUMP #2 CONTROL				X		REUSE	EXISTING	RTU0250G	YT0250HS822	2
			DIGESTER PUMP #3 CONTROL				X		REUSE	EXISTING	RTU0250G	YT0250HS823	2
			LPC-700/800 CPU STATUS				X		REUSE	EXISTING	RTU0250G	YT0250XLF780	2
			SLUDGE TANK LEVEL CONTROL				X		REUSE	EXISTING	RTU0250G	YT0250SS906	2
			ROTARY SCREEN COMPACTOR		X				REUSE	EXISTING	RTU0250G	XT0250XLR760	2
			ROTARY SCREEN CONVEYOR		X				REUSE	EXISTING	RTU0250G	XT0250XLR761	2
			ROTARY SCREEN CONVEYOR		X				REUSE	EXISTING	RTU0250G	status9022	2
			TOTAL WAS MASS SET POINT			X			REUSE	EXISTING	RTU0250G	OT0250MQSP420	2
			PTS PUMP SOLIDS CNTRL SIGNAL	X					REUSE	EXISTING	RTU0250G	IT0250OI700	2
			PTS PUMP SOLIDS CNTRL SET PT.			X			REUSE	EXISTING	RTU0250G	OT0250OSP700	2

LPC GROUP	PROCESS	PLC	POINT DESCRIPTION	POINT TYPE					FIELD DEVICE		POINT IDENTIFICATION		NOTES
				AI	DI	AO	DO	SW		TYPE	RTU	POINT NAME	
LPC-700/800	WASTE SLUDGE DIGESTION & THICKENING	REPLACE EXISTING WITH NEW SIEMENS S7 PLC	THICK 1 LOW LEVEL TRIP			X			REUSE	EXISTING	RTU0250G	OT0250LSL701	2
			THICK 2 LOW LEVEL TRIP			X			REUSE	EXISTING	RTU0250G	OT0250LSL702	2
			SLUDGE TANK STAGE 1 STOP LVL			X			REUSE	EXISTING	RTU0250G	OT0250LSH906A	2
			SLUDGE TANK STAGE 2 STOP LVL			X			REUSE	EXISTING	RTU0250G	OT0250LSH906B	2
			SLUDGE TANK STAGE 3 STOP LVL			X			REUSE	EXISTING	RTU0250G	OT0250LSH906C	2
			SLUDGE TK STAGE 1 START LVL			X			REUSE	EXISTING	RTU0250G	OT0250LSL906A	2
			RAS WET WELL LEVEL SET POINT			X			REUSE	EXISTING	RTU0250G	OT0250LSP400	2
			SLUDGE TK STAGE 2 START LVL			X			REUSE	EXISTING	RTU0250G	OT0250LSL906B	2
			SLUDGE TK STAGE 3 START LVL			X			REUSE	EXISTING	RTU0250G	OT0250LSL906C	2
			DIG. BASIN TOTAL AIR FLOW	X					REUSE	EXISTING	RTU0250G	IT0250FI800	2
			PRIMARY THICKENER #1 LEVEL	X					REUSE	EXISTING	RTU0250G	IT0250LI701	2
			PRIMARY THICKENER #2 LEVEL	X					REUSE	EXISTING	RTU0250G	IT0250LI702	2
			SEC. THICKENER SOLIDS	X					REUSE	EXISTING	RTU0250G	IT0250OI701	2
			SEC. THICKENER SOLIDS	X					REUSE	EXISTING	RTU0250G	IT0250OI702	2
			THICKENER DRIVE #1 TORQUE	X					REUSE	EXISTING	RTU0250G	IT0250NI701	2
			THICKENER DRIVE #2 TORQUE	X					REUSE	EXISTING	RTU0250G	IT0250NI702	2
			PRIM. THICKENER PUMP DISCHARG	X					REUSE	EXISTING	RTU0250G	IT0250FI724	2
			SEC. THICKENER PUMP DISCH.	X					REUSE	EXISTING	RTU0250G	IT0250FI734	2
			BLOWER BLDG. 2 AIR FLOW DP	X					REUSE	EXISTING	RTU0250G	IT0250DPI800	2
			DIGESTER PUMP DISCHARGE	X					REUSE	EXISTING	RTU0250G	IT0250FI820	2
			DIGESTER BASIN #1 LEVEL	X					NEW	LEVEL SENSOR	RTU0250G	IT0250LI801	3
			DIGESTER BASIN #2 LEVEL	X					NEW	LEVEL SENSOR	RTU0250G	IT0250LI802	3
			DIGESTER BASIN #3 LEVEL	X					NEW	LEVEL SENSOR	RTU0250G	IT0250LI803	3
			DIGESTER BASIN #4 LEVEL	X					NEW	LEVEL SENSOR	RTU0250G	IT0250LI804	3
			DIGESTER BASIN #5 LEVEL	X					NEW	LEVEL SENSOR	RTU0250G	IT0250LI805	3
			DIGESTER SOLIDS ANALYZER 1	X					REMOVE	EXISTING	RTU0250G	IT0250OI801	1
			DIGESTER SOLIDS ANALYZER 2	X					REMOVE	EXISTING	RTU0250G	IT0250OI802	1
			DIGESTER SOLIDS ANALYZER 3	X					REMOVE	EXISTING	RTU0250G	IT0250OI803	1
			PTS PUMP START DELAY TIMER			X			REUSE	EXISTING	RTU0250G	OT0250TMR720A	2
			PTS PUMP STOP DELAY TIMER			X			REUSE	EXISTING	RTU0250G	OT0250TMR720B	2

LPC GROUP	PROCESS	PLC	POINT DESCRIPTION	POINT TYPE					FIELD DEVICE		POINT IDENTIFICATION		NOTES
				AI	DI	AO	DO	SW		TYPE	RTU	POINT NAME	
LPC-700/800	DIGESTER BLOWERS	REPLACE EXISTING WITH NEW SIEMENS S7 PLC	**BLOWER 801 CONTROL**				X		REMOVE	EXISTING	RTU0250G	YT0250HS801	1
			BLOWER 801 MODE		X				EXISTING	MOTOR STARTER	RTU0250G	XT0250XLA801	7
			BLOWER 801 STATUS		X						RTU0250G	XT0250XLR801	7
			BLOWER 801 MOTOR CURRENT	X					EXISTING	CURRENT XFMR	RTU0250G	IT0250II801	7
			BLOWER 801 MOTOR VIBRATION		X				REMOVE	EXISTING	RTU0250G	XT0250VAH801A	1
			BLOWER 801 LUBE OIL PRESSURE		X				REMOVE	EXISTING	RTU0250G	XT0250PAL801	1
			BLOWER 801 LUBE OIL TEMPERATU		X				REMOVE	EXISTING	RTU0250G	XT0250TAH801A	1
			BLOWER 801 MOTOR BEARING TEMP		X				REMOVE	EXISTING	RTU0250G	XT0250TAH801B	1
			BLOWER 801 MOTOR WINDING TEMP		X				REMOVE	EXISTING	RTU0250G	XT0250TAH801C	1
			BLOWER 801 BEARING TEMPERATUR		X				REMOVE	EXISTING	RTU0250G	XT0250TAH801D	1
			BLOWER 801 VIBRATION		X				REMOVE	EXISTING	RTU0250G	XT0250VAH801B	1
			BLOWER 801 DIFF PRESSURE	X					REMOVE	DP SENSOR	RTU0250G	IT0250PDI801	1
			BLOWER 801 DISCH PRESSURE	X					REMOVE	EXISTING	RTU0250G	IT0250PI801	1
			BLOWER 802 CONTROL				X		REMOVE	EXISTING	RTU0250G	YT0250HS802	1
			BLOWER 802 MODE		X				EXISTING	MOTOR STARTER	RTU0250G	XT0250XLA802	7
			BLOWER 802 STATUS		X						RTU0250G	XT0250XLR802	7
			BLOWER 802 MOTOR CURRENT	X					EXISTING	CURRENT XFMR	RTU0250G	IT0250II802	7
			BLOWER 802 MOTOR VIBRATION		X				REMOVE	EXISTING	RTU0250G	XT0250VAH802A	1
			BLOWER 802 LUBE OIL PRESSURE		X				REMOVE	EXISTING	RTU0250G	XT0250PAL802	1
			BLOWER 802 LUBE OIL TEMPERATU		X				REMOVE	EXISTING	RTU0250G	XT0250TAH802A	1
			BLOWER 802 MOTOR BEARING TEMP		X				REMOVE	EXISTING	RTU0250G	XT0250TAH802B	1
			BLOWER 802 MOTOR WINDING TEMP		X				REMOVE	EXISTING	RTU0250G	XT0250TAH802C	1
			BLOWER 802 BEARING TEMPERATUR		X				REMOVE	EXISTING	RTU0250G	XT0250TAH802D	1
			BLOWER 802 VIBRATION		X				REMOVE	EXISTING	RTU0250G	XT0250VAH802B	1
			BLOWER 802 DIFF. PRESSURE	X					REMOVE	DP SENSOR	RTU0250G	IT0250PDI802	1
			BLOWER 802 DISCH. PRESSURE	X					REMOVE	EXISTING	RTU0250G	IT0250PI802	1
			BLOWER 803 CONTROL				X		REMOVE	EXISTING	RTU0250G	YT0250HS803	1
			BLOWER 803 MODE		X				EXISTING	MOTOR STARTER	RTU0250G	XT0250XLA803	7
			BLOWER 803 STATUS		X						RTU0250G	XT0250XLR803	7
			BLOWER 803 MOTOR CURRENT	X					EXISTING	CURRENT XFMR	RTU0250G	IT0250II803	7
			BLOWER 803 MOTOR VIBRATION		X				REMOVE	EXISTING	RTU0250G	XT0250VAH803A	1
			BLOWER 803 LUBE OIL PRESSURE		X				REMOVE	EXISTING	RTU0250G	XT0250PAL803	1
			BLOWER 803 LUBE OIL TEMPERATU		X				REMOVE	EXISTING	RTU0250G	XT0250TAH803A	1
			BLOWER 803 MOTOR BEARING TEMP		X				REMOVE	EXISTING	RTU0250G	XT0250TAH803B	1

LPC GROUP	PROCESS	PLC	POINT DESCRIPTION	POINT TYPE					FIELD DEVICE		POINT IDENTIFICATION		NOTES
				AI	DI	AO	DO	SW		TYPE	RTU	POINT NAME	
LPC-700/800	DIGESTER BLOWERS	REPLACE EXISTING WITH NEW SIEMENS S7 PLC	BLOWER 803 MOTOR WINDING TEMP		X				REMOVE	EXISTING	RTU0250G	XT0250TAH803C	1
			BLOWER 803 BEARING TEMPERATUR		X				REMOVE	EXISTING	RTU0250G	XT0250TAH803D	1
			BLOWER 803 VIBRATION		X				REMOVE	EXISTING	RTU0250G	XT0250VAH803B	1
			BLOWER 803 DIFF. PRESSURE	X					REMOVE	DP SENSOR	RTU0250G	IT0250PDI803	1
			BLOWER 803 DISCH. PRESSURE	X					REMOVE	EXISTING	RTU0250G	IT0250PI803	1
			BLOWER 804 CONTROL				X		REMOVE	EXISTING	RTU0250G	YT0250HS804	1
			BLOWER 804 MODE		X				EXISTING	MOTOR STARTER	RTU0250G	XT0250XLA804	7
			BLOWER 804 STATUS		X						RTU0250G	XT0250XLR804	7
			BLOWER 804 MOTOR CURRENT	X					EXISTING	CURRENT XFMR	RTU0250G	IT0250II804	7
			BLOWER 804 MOTOR VIBRATION		X				REMOVE	EXISTING	RTU0250G	XT0250VAH804A	1
			BLOWER 804 LUBE OIL PRESSURE		X				REMOVE	EXISTING	RTU0250G	XT0250PAL804	1
			BLOWER 804 LUBE OIL TEMPERATU		X				REMOVE	EXISTING	RTU0250G	XT0250TAH804A	1
			BLOWER 804 MOTOR BEARING TEMP		X				REMOVE	EXISTING	RTU0250G	XT0250TAH804B	1
			BLOWER 804 MOTOR WINDING TEMP		X				REMOVE	EXISTING	RTU0250G	XT0250TAH804C	1
			BLOWER 804 BEARING TEMPERATUR		X				REMOVE	EXISTING	RTU0250G	XT0250TAH804D	1
			BLOWER 804 VIBRATION		X				REMOVE	EXISTING	RTU0250G	XT0250VAH804B	1
			BLOWER 804 DIFF. PRESSURE	X					REMOVE	DP SENSOR	RTU0250G	IT0250PDI804	1
			BLOWER 804 DISCH. PRESSURE	X					REMOVE	EXISTING	RTU0250G	IT0250PI804	1
			BLOWER 811 CONTROL				X		REMOVE	EXISTING	RTU0250G	YT0250HS811	1
			BLOWER 811 SLOW MODE		X				EXISTING	MOTOR STARTER	RTU0250G	XT0250XLA811A	7
			BLOWER 811 SLOW STATUS		X						RTU0250G	XT0250XLR811A	7
			BLOWER 811 FAST MODE		X						RTU0250G	XT0250XLA811B	7
			BLOWER 811 FAST STATUS		X						RTU0250G	XT0250XLR811B	7
			BLOWER 811 MOTOR CURRENT	X					EXISTING	CURRENT XFMR	RTU0250G	IT0250II811	7
			BLOWER 811 MOTOR VIBRATION		X				REMOVE	EXISTING	RTU0250G	XT0250VAH811A	1
			BLOWER 811 LUBE OIL PRESSURE		X				REMOVE	EXISTING	RTU0250G	XT0250PAL811	1
			BLOWER 811 LUBE OIL TEMP.		X				REMOVE	EXISTING	RTU0250G	XT0250TAH811A	1
			BLOWER 811 MOTOR BEARING TEMP		X				REMOVE	EXISTING	RTU0250G	XT0250TAH811B	1
			BLOWER 811 MOTOR WINDING TEMP		X				REMOVE	EXISTING	RTU0250G	XT0250TAH811C	1
			BLOWER 811 BEARING TEMP.		X				REMOVE	EXISTING	RTU0250G	XT0250TAH811D	1
			BLOWER 811 VIBRATION		X				REMOVE	EXISTING	RTU0250G	XT0250VAH811B	1
			BLOWER 811 DIFF. PRESSURE	X					REMOVE	DP SENSOR	RTU0250G	IT0250PDI811	1
			BLOWER 811 DISCH. PRESSURE	X					REMOVE	EXISTING	RTU0250G	IT0250PI811	1

LPC GROUP	PROCESS	PLC	POINT DESCRIPTION	POINT TYPE					FIELD DEVICE		POINT IDENTIFICATION		NOTES
				AI	DI	AO	DO	SW		TYPE	RTU	POINT NAME	
LPC-700/800	DIGESTER BLOWERS	REPLACE EXISTING WITH NEW SIEMENS S7 PLC	**BLOWER 812 CONTROL**				**X**		**REMOVE**	**EXISTING**	**RTU0250G**	**YT0250HS812**	**1**
			BLOWER 812 SLOW MODE		**X**				**EXISTING**	**MOTOR STARTER**	**RTU0250G**	**XT0250XLA812A**	**7**
			BLOWER 812 SLOW STATUS		**X**						**RTU0250G**	**XT0250XLR812A**	**7**
			BLOWER 812 FAST MODE		**X**						**RTU0250G**	**XT0250XLA812B**	**7**
			BLOWER 812 FAST STATUS		**X**						**RTU0250G**	**XT0250XLR812B**	**7**
			BLOWER 812 MOTOR CURRENT	**X**					**EXISTING**	**CURRENT XFMR**	**RTU0250G**	**IT0250II812**	**7**
			BLOWER 812 MOTOR VIBRATION		**X**				**REMOVE**	**EXISTING**	**RTU0250G**	**XT0250VAH812A**	**1**
			BLOWER 812 LUBE OIL PRESSURE		**X**				**REMOVE**	**EXISTING**	**RTU0250G**	**XT0250PAL812**	**1**
			BLOWER 812 LUBE OIL TEMP.		**X**				**REMOVE**	**EXISTING**	**RTU0250G**	**XT0250TAH812A**	**1**
			BLOWER 812 MOTOR BEARING TEMP		**X**				**REMOVE**	**EXISTING**	**RTU0250G**	**XT0250TAH812B**	**1**
			BLOWER 812 MOTOR WINDING TEMP		**X**				**REMOVE**	**EXISTING**	**RTU0250G**	**XT0250TAH812C**	**1**
			BLOWER 812 BEARING TEMP.		**X**				**REMOVE**	**EXISTING**	**RTU0250G**	**XT0250TAH812D**	**1**
			BLOWER 812 VIBRATION		**X**				**REMOVE**	**EXISTING**	**RTU0250G**	**XT0250VAH812B**	**1**
			BLOWER 812 DIFF. PRESSURE	**X**					**REMOVE**	**DP SENSOR**	**RTU0250G**	**IT0250PDI812**	**1**
			BLOWER 812 DISCH. PRESSURE	**X**					**REMOVE**	**EXISTING**	**RTU0250G**	**IT0250PI812**	**1**
			BLOWER 813 CONTROL				**X**		**REMOVE**	**EXISTING PLC I/O & WIRING. BLOWER 813 WAS NEVER INSTALLED**	**RTU0250G**	**YT0250HS813**	**1**
			BLOWER 813 SLOW/FAST MODE		**X**						**RTU0250G**	**XT0250XLA813A**	**1**
			BLOWER 813 STATUS SLOW/F		**X**						**RTU0250G**	**XT0250XLR813A**	**1**
			BLOWER 813 FAST MODE		**X**						**RTU0250G**	**XT0250XLA813B**	**1**
			BLOWER 813 STATUS FAST		**X**						**RTU0250G**	**XT0250XLR813B**	**1**
			BLOWER 813 ALARM		**X**						**RTU0250G**	**XT0250YA813**	**1**
			BLOWER 813 FAULT		**X**						**RTU0250G**	**XT0250YF813**	**1**
			BLOWER 813 MOTOR CURRENT	**X**							**RTU0250G**	**IT0250II813**	**1**
			BLOWER 813 MOTOR VIBRATION		**X**						**RTU0250G**	**XT0250VAH813A**	**1**
			BLOWER 813 LUBE OIL PRESSURE		**X**						**RTU0250G**	**XT0250PAL813**	**1**
			BLOWER 813 LUBE OIL TEMP.		**X**						**RTU0250G**	**XT0250TAH813A**	**1**
			BLOWER 813 MOTOR BEARING TEMP		**X**						**RTU0250G**	**XT0250TAH813B**	**1**
			BLOWER 813 MOTOR WINDING TEMP		**X**						**RTU0250G**	**XT0250TAH813C**	**1**
			BLOWER 813 BEARING TEMP.		**X**						**RTU0250G**	**XT0250TAH813D**	**1**
			BLOWER 813 VIBRATION		**X**						**RTU0250G**	**XT0250VAH813B**	**1**
			BLOWER 813 DIFF. PRESSURE	**X**							**RTU0250G**	**IT0250PDI813**	**1**
			BLOWER 813 DISCH. PRESSURE	**X**							**RTU0250G**	**IT0250PI813**	**1**

LPC GROUP	PROCESS	PLC	POINT DESCRIPTION	POINT TYPE					FIELD DEVICE		POINT IDENTIFICATION		NOTES
				AI	DI	AO	DO	SW		TYPE	RTU	POINT NAME	
LPC-801	DIGESTER BLOWERS	NEW RETROFIT MFG PLC CONTOL PANEL	**BLOWER 801 HIGH INLET SUCTION**					X	NEW	LOCAL CNTRL PNL	RTU0250G1	ASSIGNED BY MFG	6
			BLOWER 801 HIGH DISCH PRES					X	NEW	LOCAL CNTRL PNL	RTU0250G1	ASSIGNED BY MFG	6
			BLOWER 801 LOW DISCH PRES					X	NEW	LOCAL CNTRL PNL	RTU0250G1	ASSIGNED BY MFG	6
			BLOWER 801 HIGH INLET AIR TEMP					X	NEW	LOCAL CNTRL PNL	RTU0250G1	ASSIGNED BY MFG	6
			BLOWER 801 HIGH DISCH AIR TEMP					X	NEW	LOCAL CNTRL PNL	RTU0250G1	ASSIGNED BY MFG	6
			BLOWER 801 VIBRATION ALARM					X	NEW	LOCAL CNTRL PNL	RTU0250G1	ASSIGNED BY MFG	6
			BLOWER 801 INLET AIR PRES					X	NEW	LOCAL CNTRL PNL	RTU0250G1	ASSIGNED BY MFG	6
			BLOWER 801 INLET AIR TEMP					X	NEW	LOCAL CNTRL PNL	RTU0250G1	ASSIGNED BY MFG	6
			BLOWER 801 DISCH AIR TEMP					X	NEW	LOCAL CNTRL PNL	RTU0250G1	ASSIGNED BY MFG	6
			BLOWER 801 DISCH AIR PRES					X	NEW	LOCAL CNTRL PNL	RTU0250G1	ASSIGNED BY MFG	6
			BLOWER 801 OIL RETURN TEMP					X	NEW	LOCAL CNTRL PNL	RTU0250G1	ASSIGNED BY MFG	6
			BLOWER 801 OIL SUPPLY TEMP					X	NEW	LOCAL CNTRL PNL	RTU0250G1	ASSIGNED BY MFG	6
			BLOWER 801 OIL PRES					X	NEW	LOCAL CNTRL PNL	RTU0250G1	ASSIGNED BY MFG	6
			BLOWER 801 BLOW OFF VALVE					X	NEW	LOCAL CNTRL PNL	RTU0250G1	ASSIGNED BY MFG	6
			BLOWER 801 ISOLATION VALVE					X	NEW	LOCAL CNTRL PNL	RTU0250G1	ASSIGNED BY MFG	6
			BLOWER 801 BLWR IB BEAR TEMP					X	NEW	LOCAL CNTRL PNL	RTU0250G1	ASSIGNED BY MFG	6
			BLOWER 801 BLWR OB BEAR TEMP					X	NEW	LOCAL CNTRL PNL	RTU0250G1	ASSIGNED BY MFG	6
			BLOWER 801 MTR IB BEAR TEMP					X	NEW	LOCAL CNTRL PNL	RTU0250G1	ASSIGNED BY MFG	6
			BLOWER 801 MTR OB BEAR TEMP					X	NEW	LOCAL CNTRL PNL	RTU0250G1	ASSIGNED BY MFG	6
			BLOWER 801 RUN					X	NEW	LOCAL CNTRL PNL	RTU0250G1	ASSIGNED BY MFG	6
			BLOWER 801 FAULT					X	NEW	LOCAL CNTRL PNL	RTU0250G1	ASSIGNED BY MFG	6
			BLOWER 801 REMOTE					X	NEW	LOCAL CNTRL PNL	RTU0250G1	ASSIGNED BY MFG	6
LPC-802		NEW RETROFIT MFG PLC CONTOL PANEL	**BLOWER 802 HIGH INLET SUCTION**					X	NEW	LOCAL CNTRL PNL	RTU0250G2	ASSIGNED BY MFG	6
			BLOWER 802 HIGH DISCH PRES					X	NEW	LOCAL CNTRL PNL	RTU0250G2	ASSIGNED BY MFG	6
			BLOWER 802 LOW DISCH PRES					X	NEW	LOCAL CNTRL PNL	RTU0250G2	ASSIGNED BY MFG	6
			BLOWER 802 HIGH INLET AIR TEMP					X	NEW	LOCAL CNTRL PNL	RTU0250G2	ASSIGNED BY MFG	6
			BLOWER 802 HIGH DISCH AIR TEMP					X	NEW	LOCAL CNTRL PNL	RTU0250G2	ASSIGNED BY MFG	6
			BLOWER 802 VIBRATION ALARM					X	NEW	LOCAL CNTRL PNL	RTU0250G2	ASSIGNED BY MFG	6
			BLOWER 802 INLET AIR PRES					X	NEW	LOCAL CNTRL PNL	RTU0250G2	ASSIGNED BY MFG	6
			BLOWER 802 INLET AIR TEMP					X	NEW	LOCAL CNTRL PNL	RTU0250G2	ASSIGNED BY MFG	6
			BLOWER 802 DISCH AIR TEMP					X	NEW	LOCAL CNTRL PNL	RTU0250G2	ASSIGNED BY MFG	6
			BLOWER 802 DISCH AIR PRES					X	NEW	LOCAL CNTRL PNL	RTU0250G2	ASSIGNED BY MFG	6
			BLOWER 802 OIL RETURN TEMP					X	NEW	LOCAL CNTRL PNL	RTU0250G2	ASSIGNED BY MFG	6
			BLOWER 802 OIL SUPPLY TEMP					X	NEW	LOCAL CNTRL PNL	RTU0250G2	ASSIGNED BY MFG	6
			BLOWER 802 OIL PRES					X	NEW	LOCAL CNTRL PNL	RTU0250G2	ASSIGNED BY MFG	6
			BLOWER 802 BLOW OFF VALVE					X	NEW	LOCAL CNTRL PNL	RTU0250G2	ASSIGNED BY MFG	6
			BLOWER 802 ISOLATION VALVE					X	NEW	LOCAL CNTRL PNL	RTU0250G2	ASSIGNED BY MFG	6
			BLOWER 802 BLWR IB BEAR TEMP					X	NEW	LOCAL CNTRL PNL	RTU0250G2	ASSIGNED BY MFG	6
			BLOWER 802 BLWR OB BEAR TEMP					X	NEW	LOCAL CNTRL PNL	RTU0250G2	ASSIGNED BY MFG	6
			BLOWER 802 MTR IB BEAR TEMP					X	NEW	LOCAL CNTRL PNL	RTU0250G2	ASSIGNED BY MFG	6
			BLOWER 802 MTR OB BEAR TEMP					X	NEW	LOCAL CNTRL PNL	RTU0250G2	ASSIGNED BY MFG	6
			BLOWER 802 RUN					X	NEW	LOCAL CNTRL PNL	RTU0250G2	ASSIGNED BY MFG	6
			BLOWER 802 FAULT					X	NEW	LOCAL CNTRL PNL	RTU0250G2	ASSIGNED BY MFG	6
			BLOWER 802 REMOTE					X	NEW	LOCAL CNTRL PNL	RTU0250G2	ASSIGNED BY MFG	6

LPC GROUP	PROCESS	PLC	POINT DESCRIPTION	POINT TYPE					FIELD DEVICE		POINT IDENTIFICATION		NOTES
				AI	DI	AO	DO	SW		TYPE	RTU	POINT NAME	
LPC-803	DIGESTER BLOWERS	NEW RETROFIT MFG PLC CONTOL PANEL	**BLOWER 803 HIGH INLET SUCTION**					X	NEW	LOCAL CNTRL PNL	RTU0250G3	ASSIGNED BY MFG	6
			BLOWER 803 HIGH DISCH PRES					X	NEW	LOCAL CNTRL PNL	RTU0250G3	ASSIGNED BY MFG	6
			BLOWER 803 LOW DISCH PRES					X	NEW	LOCAL CNTRL PNL	RTU0250G3	ASSIGNED BY MFG	6
			BLOWER 803 HIGH INLET AIR TEMP					X	NEW	LOCAL CNTRL PNL	RTU0250G3	ASSIGNED BY MFG	6
			BLOWER 803 HIGH DISCH AIR TEMP					X	NEW	LOCAL CNTRL PNL	RTU0250G3	ASSIGNED BY MFG	6
			BLOWER 803 VIBRATION ALARM					X	NEW	LOCAL CNTRL PNL	RTU0250G3	ASSIGNED BY MFG	6
			BLOWER 803 INLET AIR PRES					X	NEW	LOCAL CNTRL PNL	RTU0250G3	ASSIGNED BY MFG	6
			BLOWER 803 INLET AIR TEMP					X	NEW	LOCAL CNTRL PNL	RTU0250G3	ASSIGNED BY MFG	6
			BLOWER 803 DISCH AIR TEMP					X	NEW	LOCAL CNTRL PNL	RTU0250G3	ASSIGNED BY MFG	6
			BLOWER 803 DISCH AIR PRES					X	NEW	LOCAL CNTRL PNL	RTU0250G3	ASSIGNED BY MFG	6
			BLOWER 803 OIL RETURN TEMP					X	NEW	LOCAL CNTRL PNL	RTU0250G3	ASSIGNED BY MFG	6
			BLOWER 803 OIL SUPPLY TEMP					X	NEW	LOCAL CNTRL PNL	RTU0250G3	ASSIGNED BY MFG	6
			BLOWER 803 OIL PRES					X	NEW	LOCAL CNTRL PNL	RTU0250G3	ASSIGNED BY MFG	6
			BLOWER 803 BLOW OFF VALVE					X	NEW	LOCAL CNTRL PNL	RTU0250G3	ASSIGNED BY MFG	6
			BLOWER 803 ISOLATION VALVE					X	NEW	LOCAL CNTRL PNL	RTU0250G3	ASSIGNED BY MFG	6
			BLOWER 803 BLWR IB BEAR TEMP					X	NEW	LOCAL CNTRL PNL	RTU0250G3	ASSIGNED BY MFG	6
			BLOWER 803 BLWR OB BEAR TEMP					X	NEW	LOCAL CNTRL PNL	RTU0250G3	ASSIGNED BY MFG	6
			BLOWER 803 MTR IB BEAR TEMP					X	NEW	LOCAL CNTRL PNL	RTU0250G3	ASSIGNED BY MFG	6
			BLOWER 803 MTR OB BEAR TEMP					X	NEW	LOCAL CNTRL PNL	RTU0250G3	ASSIGNED BY MFG	6
			BLOWER 803 RUN					X	NEW	LOCAL CNTRL PNL	RTU0250G3	ASSIGNED BY MFG	6
			BLOWER 803 FAULT					X	NEW	LOCAL CNTRL PNL	RTU0250G3	ASSIGNED BY MFG	6
			BLOWER 803 REMOTE					X	NEW	LOCAL CNTRL PNL	RTU0250G3	ASSIGNED BY MFG	6
LPC-804		NEW RETROFIT MFG PLC CONTOL PANEL	**BLOWER 804 HIGH INLET SUCTION**					X	NEW	LOCAL CNTRL PNL	RTU0250G4	ASSIGNED BY MFG	6
			BLOWER 804 HIGH DISCH PRES					X	NEW	LOCAL CNTRL PNL	RTU0250G4	ASSIGNED BY MFG	6
			BLOWER 804 LOW DISCH PRES					X	NEW	LOCAL CNTRL PNL	RTU0250G4	ASSIGNED BY MFG	6
			BLOWER 804 HIGH INLET AIR TEMP					X	NEW	LOCAL CNTRL PNL	RTU0250G4	ASSIGNED BY MFG	6
			BLOWER 804 HIGH DISCH AIR TEMP					X	NEW	LOCAL CNTRL PNL	RTU0250G4	ASSIGNED BY MFG	6
			BLOWER 804 VIBRATION ALARM					X	NEW	LOCAL CNTRL PNL	RTU0250G4	ASSIGNED BY MFG	6
			BLOWER 804 INLET AIR PRES					X	NEW	LOCAL CNTRL PNL	RTU0250G4	ASSIGNED BY MFG	6
			BLOWER 804 INLET AIR TEMP					X	NEW	LOCAL CNTRL PNL	RTU0250G4	ASSIGNED BY MFG	6
			BLOWER 804 DISCH AIR TEMP					X	NEW	LOCAL CNTRL PNL	RTU0250G4	ASSIGNED BY MFG	6
			BLOWER 804 DISCH AIR PRES					X	NEW	LOCAL CNTRL PNL	RTU0250G4	ASSIGNED BY MFG	6
			BLOWER 804 OIL RETURN TEMP					X	NEW	LOCAL CNTRL PNL	RTU0250G4	ASSIGNED BY MFG	6
			BLOWER 804 OIL SUPPLY TEMP					X	NEW	LOCAL CNTRL PNL	RTU0250G4	ASSIGNED BY MFG	6
			BLOWER 804 OIL PRES					X	NEW	LOCAL CNTRL PNL	RTU0250G4	ASSIGNED BY MFG	6
			BLOWER 804 BLOW OFF VALVE					X	NEW	LOCAL CNTRL PNL	RTU0250G4	ASSIGNED BY MFG	6
			BLOWER 804 ISOLATION VALVE					X	NEW	LOCAL CNTRL PNL	RTU0250G4	ASSIGNED BY MFG	6
			BLOWER 804 BLWR IB BEAR TEMP					X	NEW	LOCAL CNTRL PNL	RTU0250G4	ASSIGNED BY MFG	6
			BLOWER 804 BLWR OB BEAR TEMP					X	NEW	LOCAL CNTRL PNL	RTU0250G4	ASSIGNED BY MFG	6
			BLOWER 804 MTR IB BEAR TEMP					X	NEW	LOCAL CNTRL PNL	RTU0250G4	ASSIGNED BY MFG	6
			BLOWER 804 MTR OB BEAR TEMP					X	NEW	LOCAL CNTRL PNL	RTU0250G4	ASSIGNED BY MFG	6
			BLOWER 804 RUN					X	NEW	LOCAL CNTRL PNL	RTU0250G4	ASSIGNED BY MFG	6
			BLOWER 804 FAULT					X	NEW	LOCAL CNTRL PNL	RTU0250G4	ASSIGNED BY MFG	6
			BLOWER 804 REMOTE					X	NEW	LOCAL CNTRL PNL	RTU0250G4	ASSIGNED BY MFG	6
			BLOWER 811 HIGH INLET SUCTION					X	NEW	LOCAL CNTRL PNL	RTU0250G5	ASSIGNED BY MFG	6

LPC GROUP	PROCESS	PLC	POINT DESCRIPTION	POINT TYPE					FIELD DEVICE		POINT IDENTIFICATION		NOTES
				AI	DI	AO	DO	SW		TYPE	RTU	POINT NAME	
LPC-811	DIGESTER BLOWERS	NEW RETROFIT MFG PLC CONTOL PANEL	**BLOWER 811 HIGH DISCH PRES**					**X**	**NEW**	**LOCAL CNTRL PNL**	**RTU0250G5**	**ASSIGNED BY MFG**	**6**
			BLOWER 811 LOW DISCH PRES					**X**	**NEW**	**LOCAL CNTRL PNL**	**RTU0250G5**	**ASSIGNED BY MFG**	**6**
			BLOWER 811 HIGH INLET AIR TEMP					**X**	**NEW**	**LOCAL CNTRL PNL**	**RTU0250G5**	**ASSIGNED BY MFG**	**6**
			BLOWER 811 HIGH DISCH AIR TEMP					**X**	**NEW**	**LOCAL CNTRL PNL**	**RTU0250G5**	**ASSIGNED BY MFG**	**6**
			BLOWER 811 VIBRATION ALARM					**X**	**NEW**	**LOCAL CNTRL PNL**	**RTU0250G5**	**ASSIGNED BY MFG**	**6**
			BLOWER 811 INLET AIR PRES					**X**	**NEW**	**LOCAL CNTRL PNL**	**RTU0250G5**	**ASSIGNED BY MFG**	**6**
			BLOWER 811 INLET AIR TEMP					**X**	**NEW**	**LOCAL CNTRL PNL**	**RTU0250G5**	**ASSIGNED BY MFG**	**6**
			BLOWER 811 DISCH AIR TEMP					**X**	**NEW**	**LOCAL CNTRL PNL**	**RTU0250G5**	**ASSIGNED BY MFG**	**6**
			BLOWER 811 DISCH AIR PRES					**X**	**NEW**	**LOCAL CNTRL PNL**	**RTU0250G5**	**ASSIGNED BY MFG**	**6**
			BLOWER 811 OIL RETURN TEMP					**X**	**NEW**	**LOCAL CNTRL PNL**	**RTU0250G5**	**ASSIGNED BY MFG**	**6**
			BLOWER 811 OIL SUPPLY TEMP					**X**	**NEW**	**LOCAL CNTRL PNL**	**RTU0250G5**	**ASSIGNED BY MFG**	**6**
			BLOWER 811 OIL PRES					**X**	**NEW**	**LOCAL CNTRL PNL**	**RTU0250G5**	**ASSIGNED BY MFG**	**6**
			BLOWER 811 BLOW OFF VALVE					**X**	**NEW**	**LOCAL CNTRL PNL**	**RTU0250G5**	**ASSIGNED BY MFG**	**6**
			BLOWER 811 ISOLATION VALVE					**X**	**NEW**	**LOCAL CNTRL PNL**	**RTU0250G5**	**ASSIGNED BY MFG**	**6**
			BLOWER 811 BLWR IB BEAR TEMP					**X**	**NEW**	**LOCAL CNTRL PNL**	**RTU0250G5**	**ASSIGNED BY MFG**	**6**
			BLOWER 811 BLWR OB BEAR TEMP					**X**	**NEW**	**LOCAL CNTRL PNL**	**RTU0250G5**	**ASSIGNED BY MFG**	**6**
			BLOWER 811 MTR IB BEAR TEMP					**X**	**NEW**	**LOCAL CNTRL PNL**	**RTU0250G5**	**ASSIGNED BY MFG**	**6**
			BLOWER 811 MTR OB BEAR TEMP					**X**	**NEW**	**LOCAL CNTRL PNL**	**RTU0250G5**	**ASSIGNED BY MFG**	**6**
			BLOWER 811 RUN					**X**	**NEW**	**LOCAL CNTRL PNL**	**RTU0250G5**	**ASSIGNED BY MFG**	**6**
			BLOWER 811 FAULT					**X**	**NEW**	**LOCAL CNTRL PNL**	**RTU0250G5**	**ASSIGNED BY MFG**	**6**
			BLOWER 811 REMOTE					**X**	**NEW**	**LOCAL CNTRL PNL**	**RTU0250G5**	**ASSIGNED BY MFG**	**6**
LPC-812		NEW RETROFIT MFG PLC CONTOL PANEL	**BLOWER 812 HIGH INLET SUCTION**					**X**	**NEW**	**LOCAL CNTRL PNL**	**RTU0250G6**	**ASSIGNED BY MFG**	**6**
			BLOWER 812 HIGH DISCH PRES					**X**	**NEW**	**LOCAL CNTRL PNL**	**RTU0250G6**	**ASSIGNED BY MFG**	**6**
			BLOWER 812 LOW DISCH PRES					**X**	**NEW**	**LOCAL CNTRL PNL**	**RTU0250G6**	**ASSIGNED BY MFG**	**6**
			BLOWER 812 HIGH INLET AIR TEMP					**X**	**NEW**	**LOCAL CNTRL PNL**	**RTU0250G6**	**ASSIGNED BY MFG**	**6**
			BLOWER 812 HIGH DISCH AIR TEMP					**X**	**NEW**	**LOCAL CNTRL PNL**	**RTU0250G6**	**ASSIGNED BY MFG**	**6**
			BLOWER 812 VIBRATION ALARM					**X**	**NEW**	**LOCAL CNTRL PNL**	**RTU0250G6**	**ASSIGNED BY MFG**	**6**
			BLOWER 812 INLET AIR PRES					**X**	**NEW**	**LOCAL CNTRL PNL**	**RTU0250G6**	**ASSIGNED BY MFG**	**6**
			BLOWER 812 INLET AIR TEMP					**X**	**NEW**	**LOCAL CNTRL PNL**	**RTU0250G6**	**ASSIGNED BY MFG**	**6**
			BLOWER 812 DISCH AIR TEMP					**X**	**NEW**	**LOCAL CNTRL PNL**	**RTU0250G6**	**ASSIGNED BY MFG**	**6**
			BLOWER 812 DISCH AIR PRES					**X**	**NEW**	**LOCAL CNTRL PNL**	**RTU0250G6**	**ASSIGNED BY MFG**	**6**
			BLOWER 812 OIL RETURN TEMP					**X**	**NEW**	**LOCAL CNTRL PNL**	**RTU0250G6**	**ASSIGNED BY MFG**	**6**
			BLOWER 812 OIL SUPPLY TEMP					**X**	**NEW**	**LOCAL CNTRL PNL**	**RTU0250G6**	**ASSIGNED BY MFG**	**6**
			BLOWER 812 OIL PRES					**X**	**NEW**	**LOCAL CNTRL PNL**	**RTU0250G6**	**ASSIGNED BY MFG**	**6**
			BLOWER 812 BLOW OFF VALVE					**X**	**NEW**	**LOCAL CNTRL PNL**	**RTU0250G6**	**ASSIGNED BY MFG**	**6**
			BLOWER 812 ISOLATION VALVE					**X**	**NEW**	**LOCAL CNTRL PNL**	**RTU0250G6**	**ASSIGNED BY MFG**	**6**
			BLOWER 812 BLWR IB BEAR TEMP					**X**	**NEW**	**LOCAL CNTRL PNL**	**RTU0250G6**	**ASSIGNED BY MFG**	**6**
			BLOWER 812 BLWR OB BEAR TEMP					**X**	**NEW**	**LOCAL CNTRL PNL**	**RTU0250G6**	**ASSIGNED BY MFG**	**6**
			BLOWER 812 MTR IB BEAR TEMP					**X**	**NEW**	**LOCAL CNTRL PNL**	**RTU0250G6**	**ASSIGNED BY MFG**	**6**
			BLOWER 812 MTR OB BEAR TEMP					**X**	**NEW**	**LOCAL CNTRL PNL**	**RTU0250G6**	**ASSIGNED BY MFG**	**6**
			BLOWER 812 RUN					**X**	**NEW**	**LOCAL CNTRL PNL**	**RTU0250G6**	**ASSIGNED BY MFG**	**6**
			BLOWER 812 FAULT					**X**	**NEW**	**LOCAL CNTRL PNL**	**RTU0250G6**	**ASSIGNED BY MFG**	**6**
			BLOWER 812 REMOTE					**X**	**NEW**	**LOCAL CNTRL PNL**	**RTU0250G6**	**ASSIGNED BY MFG**	**6**

LPC GROUP	PROCESS	PLC	POINT DESCRIPTION	POINT TYPE					FIELD DEVICE		POINT IDENTIFICATION		NOTES
				AI	DI	AO	DO	SW		TYPE	RTU	POINT NAME	
LPC-900A/900B	WASTE SLUDGE DEWATERING AND DISPOSAL	DEMO EXISTING PLC	BULK POLY. VOL. ALARM SET PT()			X			REMOVE	EXISTING	RTU0250H	OT0250VASP901	1
			BULK POLYMER TANK VOLUME	X					REMOVE	EXISTING	RTU0250H	IT0250VOL901	1
			DIL. POLYMER TANK 1 VOLUME	X					REMOVE	EXISTING	RTU0250H	IT0250VOL941	1
			DIL. POLYMER TANK 2 VOLUME	X					REMOVE	EXISTING	RTU0250H	IT0250VOL942	1
			POLYMER BATCH COUNTER()	X					REMOVE	EXISTING	RTU0250H	IT0250BQI900	1
			CENTRIFUDGE 1 MASS RATE()	X					REMOVE	EXISTING	RTU0250H	IT0250MI951	1
			CENTRIFUDGE 2 MASS RATE()	X					REMOVE	EXISTING	RTU0250H	IT0250MI952	1
			CENTRIFUDGE 3 MASS RATE()	X					REMOVE	EXISTING	RTU0250H	IT0250MI953	1
			CENTRIFUDGE 4 MASS RATE	X					REMOVE	EXISTING	RTU0250H	IT0250MI954	1
			CENTRATE 1 SOLIDS SET POINT()			X			REMOVE	EXISTING	RTU0250H	OT0250OSP911	1
			CENTRATE 2 SOLIDS SET POINT()			X			REMOVE	EXISTING	RTU0250H	OT0250OSP912	1
			CENTRATE 3 SOLIDS SET POINT()			X			REMOVE	EXISTING	RTU0250H	OT0250OSP913	1
			CENTRATE 4 SOLIDS SET POINT()			X			REMOVE	EXISTING	RTU0250H	OT0250OSP914	1
			CENTRIFUDGE 1 MASS SET POINT()			X			REMOVE	EXISTING	RTU0250H	OT0250MSP951	1
			CENTRIFUDGE 2 MASS SET POINT()			X			REMOVE	EXISTING	RTU0250H	OT0250MSP952	1
			CENTRIFUDGE 3 MASS SET POINT()			X			REMOVE	EXISTING	RTU0250H	OT0250MSP953	1
			CENTRIFUDGE 4 MASS SET POINT()			X			REMOVE	EXISTING	RTU0250H	OT0250MSP954	1
			POLYMER PUMP 1 FLOW - GAIN()			X			REMOVE	EXISTING	RTU0250H	OT0250GN911	1
			POLYMER PUMP 2 FLOW - GAIN()			X			REMOVE	EXISTING	RTU0250H	OT0250GN912	1
			POLYMER PUMP 3 FLOW - GAIN()			X			REMOVE	EXISTING	RTU0250H	OT0250GN913	1
			POLYMER PUMP 4 FLOW - GAIN()			X			REMOVE	EXISTING	RTU0250H	OT0250GN914	1
			CENTRATE 1 SOLIDS - GAIN()			X			REMOVE	EXISTING	RTU0250H	OT0250GN911A	1
			CENTRATE 2 SOLIDS-GAIN()			X			REMOVE	EXISTING	RTU0250H	OT0250GN912A	1
			CENTRATE 3 SOLIDS-GAIN()			X			REMOVE	EXISTING	RTU0250H	OT0250GN913A	1
			CENTRATE 4 SOLIDS-GAIN()			X			REMOVE	EXISTING	RTU0250H	OT0250GN914A	1
			CENTRIFUDGE 1 FLOW - GAIN()			X			REMOVE	EXISTING	RTU0250H	OT0250GN951	1
			CENTRIFUDGE 2 FLOW - GAIN()			X			REMOVE	EXISTING	RTU0250H	OT0250GN952	1
			CENTRIFUDGE 3 FLOW - GAIN()			X			REMOVE	EXISTING	RTU0250H	OT0250GN953	1
			CENTRIFUDGE 4 FLOW - GAIN()			X			REMOVE	EXISTING	RTU0250H	OT0250GN954	1
			CENTRIFUDGE 1 MASS - GAIN()			X			REMOVE	EXISTING	RTU0250H	OT0250GN951A	1
			CENTRIFUDGE 2 MASS - GAIN()			X			REMOVE	EXISTING	RTU0250H	OT0250GN952A	1
			CENTRIFUDGE 3 MASS - GAIN()			X			REMOVE	EXISTING	RTU0250H	OT0250GN953A	1
			CENTRIFUDGE 4 MASS - GAIN()			X			REMOVE	EXISTING	RTU0250H	OT0250GN954A	1
			POLYMER 1 FLOW - RESET()			X			REMOVE	EXISTING	RTU0250H	OT0250RS0911	1
			POLYMER 2 FLOW - RESET()			X			REMOVE	EXISTING	RTU0250H	OT0250RS0912	1
			POLYMER 3 FLOW - RESET()			X			REMOVE	EXISTING	RTU0250H	OT0250RS0913	1
			POLYMER 4 FLOW - RESET()			X			REMOVE	EXISTING	RTU0250H	OT0250RS0914	1
			CENTRATE 1 SOLIDS - RESET()			X			REMOVE	EXISTING	RTU0250H	OT0250RS911A	1
			CENTRATE 2 SOLIDS - RESET()			X			REMOVE	EXISTING	RTU0250H	OT0250RS912A	1
			CENTRATE 3 SOLIDS - RESET()			X			REMOVE	EXISTING	RTU0250H	OT0250RS913A	1

LPC GROUP	PROCESS	PLC	POINT DESCRIPTION	POINT TYPE					FIELD DEVICE		POINT IDENTIFICATION		NOTES
				AI	DI	AO	DO	SW		TYPE	RTU	POINT NAME	
LPC-900A/900B	WASTE SLUDGE DEWATERING AND DISPOSAL	DEMO EXISTING PLC	CENTRATE 4 SOLIDS - RESET()			X			REMOVE	EXISTING	RTU0250H	OT0250RS914A	1
			CENTRIFUDGE 1 FLOW - RESET			X			REMOVE	EXISTING	RTU0250H	OT0250RS951	1
			CENTRIFUDGE 2 FLOW - RESET			X			REMOVE	EXISTING	RTU0250H	OT0250RS952	1
			CENTRIFUDGE 3 FLOW - RESET			X			REMOVE	EXISTING	RTU0250H	OT0250RS953	1
			CENTRIFUDGE 4 FLOW - RESET			X			REMOVE	EXISTING	RTU0250H	OT0250RS954	1
			CENTRIFUDGE 1 MASS - RESET			X			REMOVE	EXISTING	RTU0250H	OT0250RS951A	1
			CENTRIFUDGE 2 MASS - RESET			X			REMOVE	EXISTING	RTU0250H	OT0250RS952A	1
			CENTRIFUDGE 3 MASS - RESET			X			REMOVE	EXISTING	RTU0250H	OT0250RS953A	1
			CENTRIFUDGE 4 MASS - RESET			X			REMOVE	EXISTING	RTU0250H	OT0250RS954A	1
			POLY. PUMP #1 SPEED CONTROL			X			REMOVE	EXISTING	RTU0250H	OT0250SC911	1
			POLY. PUMP #2 SPEED CONTROL			X			REMOVE	EXISTING	RTU0250H	OT0250SC912	1
			POLY. PUMP #3 SPEED CONTROL			X			REMOVE	EXISTING	RTU0250H	OT0250SC913	1
			POLY. PUMP #4 SPEED CONTROL			X			REMOVE	EXISTING	RTU0250H	OT0250SC914	1
			CENTRIF. PUMP #1 SPEED CONTRO			X			REMOVE	EXISTING	RTU0250H	OT0250SC951	1
			CENTRIF. PUMP #2 SPEED CONTRO			X			REMOVE	EXISTING	RTU0250H	OT0250SC952	1
			CENTRIF. PUMP #3 SPEED CONTRO			X			REMOVE	EXISTING	RTU0250H	OT0250SC953	1
			CENTRIF. PUMP #4 SPEED CONTRO			X			REMOVE	EXISTING	RTU0250H	OT0250SC954	1
			CENTRIF. DRIVE 1 SPEED CONTRO			X			REMOVE	EXISTING	RTU0250H	OT0250SC961	1
			CENTRIF. DRIVE 2 SPEED CONTRO			X			REMOVE	EXISTING	RTU0250H	OT0250SC962	1
			CENTRIF. DRIVE 3 SPEED CONTRO			X			REMOVE	EXISTING	RTU0250H	OT0250SC963	1
			CENTRIF. DRIVE 4 SPEED CONTRO			X			REMOVE	EXISTING	RTU0250H	OT0250SC964	1
			CENTRIF. DRIVE 1 TORQUE CONTR			X			REMOVE	EXISTING	RTU0250H	OT0250NC961	1
			CENTRIF. DRIVE 2 TORQUE CONTR			X			REMOVE	EXISTING	RTU0250H	OT0250NC962	1
			CENTRIF. DRIVE 3 TORQUE CONTR			X			REMOVE	EXISTING	RTU0250H	OT0250NC963	1
			CENTRIF. DRIVE 4 TORQUE CONTR			X			REMOVE	EXISTING	RTU0250H	OT0250NC964	1
			SLUDGE RECEIVING STA. FLOW	X					REMOVE	EXISTING	RTU0250H	XT0250FIT740	1
			BULK POLYMER STORAGE TANK #1	X					REMOVE	EXISTING	RTU0250H	IT0250LI901	1
			BULK POLY. STO. TANK #2 LEVEL	X					REMOVE	EXISTING	RTU0250H	IT0250LI902	1
			SLUDGE FEED TANK #1 LEVEL	X					REMOVE	EXISTING	RTU0250H	IT0250LI906	1
			POLYMER DAY TANK #1 LEVEL	X					REMOVE	EXISTING	RTU0250H	IT0250LI941	1
			POLYMER DAY TANK #2 LEVEL	X					REMOVE	EXISTING	RTU0250H	IT0250LI942	1
			POLYMER DAY TANK #3 LEVEL	X					REMOVE	EXISTING	RTU0250H	IT0250LI943	1
			POLYMER DAY TANK #4 LEVEL	X					REMOVE	EXISTING	RTU0250H	IT0250LI944	1
			SLUDGE RECEIVING STA. LEVEL	X					REMOVE	EXISTING	RTU0250H	XT0250LIT740	1
			CENTRIFUDGE #1 MOTOR CURRENT	X					REMOVE	EXISTING	RTU0250H	IT0250II961	1
			CENTRIFUDGE #2 MOTOR CURRENT	X					REMOVE	EXISTING	RTU0250H	IT0250II962	1
			CENTRIFUDGE #3 MOTOR CURRENT	X					REMOVE	EXISTING	RTU0250H	IT0250II963	1
			CENTRIFUDGE #4 MOTOR CURRENT	X					REMOVE	EXISTING	RTU0250H	IT0250II964	1
			CENTRIFUDGE #1 DRIVE TORQUE	X					REMOVE	EXISTING	RTU0250H	IT0250NI961	1
			CENTRIFUDGE #2 DRIVE TORQUE	X					REMOVE	EXISTING	RTU0250H	IT0250NI962	1
			CENTRIFUDGE #3 DRIVE TORQUE	X					REMOVE	EXISTING	RTU0250H	IT0250NI963	1
			CENTRIFUDGE #4 DRIVE TORQUE	X					REMOVE	EXISTING	RTU0250H	IT0250NI964	1
			POLYMER FEED TO CENTRIFUGE #1	X					REMOVE	EXISTING	RTU0250H	IT0250FI911	1

LPC GROUP	PROCESS	PLC	POINT DESCRIPTION	POINT TYPE					FIELD DEVICE		POINT IDENTIFICATION		NOTES
				AI	DI	AO	DO	SW		TYPE	RTU	POINT NAME	
LPC-900A/900B	WASTE SLUDGE DEWATERING AND DISPOSAL	DEMO EXISTING PLC	**POLYMER FEED TO CENTRIFUGE #2**	**X**					**REMOVE**	**EXISTING**	**RTU0250H**	**IT0250FI912**	**1**
			POLYMER FEED TO CENTRIFUGE #3	**X**					**REMOVE**	**EXISTING**	**RTU0250H**	**IT0250FI913**	**1**
			POLYMER FEED TO CENTRIFUGE #4	**X**					**REMOVE**	**EXISTING**	**RTU0250H**	**IT0250FI914**	**1**
			CENTRIFUDGE #1 FEEDRATE	**X**					**REMOVE**	**EXISTING**	**RTU0250H**	**IT0250FI951**	**1**
			CENTRIFUDGE #2 FEEDRATE	**X**					**REMOVE**	**EXISTING**	**RTU0250H**	**IT0250FI952**	**1**
			CENTRIFUDGE #3 FEEDRATE	**X**					**REMOVE**	**EXISTING**	**RTU0250H**	**IT0250FI953**	**1**
			CENTRIFUDGE #4 FEEDRATE	**X**					**REMOVE**	**EXISTING**	**RTU0250H**	**IT0250FI954**	**1**
			CENTRIFUDGE FEED #1 S. SOLIDS	**X**					**REMOVE**	**EXISTING**	**RTU0250H**	**IT0250OI951**	**1**
			CENTRIFUDGE FEED #2 S. SOLIDS	**X**					**REMOVE**	**EXISTING**	**RTU0250H**	**IT0250OI952**	**1**
			CENTRIFUDGE FEED #3 S. SOLIDS	**X**					**REMOVE**	**EXISTING**	**RTU0250H**	**IT0250OI953**	**1**
			CENTRIFUDGE FEED #4 S. SOLIDS	**X**					**REMOVE**	**EXISTING**	**RTU0250H**	**IT0250OI954**	**1**
			CENTR. 1 CENTRATE SOLIDS	**X**					**REMOVE**	**EXISTING**	**RTU0250H**	**IT0250OI961**	**1**
			CENTR. 2 CENTRATE SOLIDS	**X**					**REMOVE**	**EXISTING**	**RTU0250H**	**IT0250OI962**	**1**
			CENTR. 3 CENTRATE SOLIDS	**X**					**REMOVE**	**EXISTING**	**RTU0250H**	**IT0250OI963**	**1**
			CENTR. 4 CENTRATE SOLIDS	**X**					**REMOVE**	**EXISTING**	**RTU0250H**	**IT0250OI964**	**1**
			POLYMER FEED PUMP #1 SPEED	**X**					**REMOVE**	**EXISTING**	**RTU0250H**	**IT0250SI911**	**1**
			POLYMER FEED PUMP #2 SPEED	**X**					**REMOVE**	**EXISTING**	**RTU0250H**	**IT0250SI912**	**1**
			POLYMER FEED PUMP #3 SPEED	**X**					**REMOVE**	**EXISTING**	**RTU0250H**	**IT0250SI913**	**1**
			POLYMER FEED PUMP #4 SPEED	**X**					**REMOVE**	**EXISTING**	**RTU0250H**	**IT0250SI914**	**1**
			CENTRIFUDGE FEED PUMP #1 SPEE	**X**					**REMOVE**	**EXISTING**	**RTU0250H**	**IT0250SI951**	**1**
			CENTRIFUDGE FEED PUMP #2 SPEE	**X**					**REMOVE**	**EXISTING**	**RTU0250H**	**IT0250SI952**	**1**
			CENTRIFUDGE FEED PUMP #3 SPEE	**X**					**REMOVE**	**EXISTING**	**RTU0250H**	**IT0250SI953**	**1**
			CENTRIFUDGE FEED PUMP #4 SPEE	**X**					**REMOVE**	**EXISTING**	**RTU0250H**	**IT0250SI954**	**1**
			CENTRIFUDGE #1 DRIVE SPEED	**X**					**REMOVE**	**EXISTING**	**RTU0250H**	**IT0250SI961**	**1**
			CENTRIFUDGE #2 DRIVE SPEED	**X**					**REMOVE**	**EXISTING**	**RTU0250H**	**IT0250SI962**	**1**
			CENTRIFUDGE #3 DRIVE SPEED	**X**					**REMOVE**	**EXISTING**	**RTU0250H**	**IT0250SI963**	**1**
			CENTRIFUDGE #4 DRIVE SPEED	**X**					**REMOVE**	**EXISTING**	**RTU0250H**	**IT0250SI964**	**1**
			SLUDGE CAKE PUMP #1 SPEED	**X**					**REMOVE**	**EXISTING**	**RTU0250H**	**IT0250SI965**	**1**
			SLUDGE CAKE PUMP #2 SPEED	**X**					**REMOVE**	**EXISTING**	**RTU0250H**	**IT0250SI966**	**1**
			SLUDGE CAKE PUMP #3 SPEED	**X**					**REMOVE**	**EXISTING**	**RTU0250H**	**IT0250SI967**	**1**
			SLUDGE CAKE PUMP #1 SPEED	**X**					**REMOVE**	**EXISTING**	**RTU0250H**	**IT0250SI968**	**1**

LPC GROUP	PROCESS	PLC	POINT DESCRIPTION	POINT TYPE					FIELD DEVICE		POINT IDENTIFICATION		NOTES
				AI	DI	AO	DO	SW		TYPE	RTU	POINT NAME	
LPC-900A/900B	WASTE SLUDGE DEWATERING AND DISPOSAL	DEMO EXISTING PLC	**CONC POLY TANK 901 LEVEL**	**X**					**REMOVE**	**LEVEL SENSOR**	**RTU0250I**	**IT0250LIT901**	**1**
			POLY PUMP #2 AUTO		**X**				**EXISTING**	**HAND SWITCH**	**RTU0250I**	**XT0250DYN912**	**1**
			POLY PUMP #3 AUTO		**X**				**EXISTING**	**HAND SWITCH**	**RTU0250I**	**XT0250DYN913**	**1**
			CONC POLY PUMP #3 STATUS		**X**				**EXISTING**	**MOTOR STARTER**	**RTU0250I**	**XT0250DYN903**	**1**
			CONC POLY MIXING FLOW RATE	**X**					**EXISTING**	**FLOW METER**	**RTU0250I**	**IT0250FIT900**	**1**
			BELT PRESS #1 DIL POLY FLOW	**X**					**REMOVE**	**FLOW METER**	**RTU0250I**	**IT0250FIT912**	**1**
			BELT PRESS #2 DIL POLY FLOW	**X**					**REMOVE**	**FLOW METER**	**RTU0250I**	**IT0250FIT913**	**1**
			BELT PRESS #3 DIL POLY FLOW	**X**					**REMOVE**	**FLOW METER**	**RTU0250I**	**IT0250FIT914**	**1**
			DIL POLY #1 TANK 941 LEVEL	**X**					**REMOVE**	**LEVEL SENSOR**	**RTU0250I**	**IT0250LIT941**	**1**
			DIL POLY #2 TANK 942 LEVEL	**X**					**REMOVE**	**LEVEL SENSOR**	**RTU0250I**	**IT0250LIT942**	**1**
			DIL POLY #1 TANK MIXER M904 STATUS		**X**				**REMOVE**	**CURRENT SWITCH**	**RTU0250I**	**XT0250IY904**	**1**
			DIL POLY #2 TANK MIXER M905 STATUS		**X**				**REMOVE**	**CURRENT SWITCH**	**RTU0250I**	**XT0250IY905**	**1**
			NPV FILL VALVE XV-921 AUTO		**X**				**REMOVE**	**HAND SWITCH**	**RTU0250I**	**XT0250XV921**	**1**
			NPV FILL VALVE XV-922 AUTO		**X**				**REMOVE**	**HAND SWITCH**	**RTU0250I**	**XT0250XV922**	**1**
			POLYMER FILL VALVE XV-925 AUTO		**X**				**REMOVE**	**HAND SWITCH**	**RTU0250I**	**XT0250XV925**	**1**
			POLYMER FILL VALVE XV-926 AUTO		**X**				**REMOVE**	**HAND SWITCH**	**RTU0250I**	**XT0250XV926**	**1**
			TANK TK-941 OUTLET VALVE XV-948 A		**X**				**REMOVE**	**HAND SWITCH**	**RTU0250I**	**XT0250XV948**	**1**
			TANK TK-942 OUTLET VALVE XV-949 A		**X**				**REMOVE**	**HAND SWITCH**	**RTU0250I**	**XT0250XV949**	**1**

LPC GROUP	PROCESS	PLC	POINT DESCRIPTION	POINT TYPE					FIELD DEVICE		POINT IDENTIFICATION		NOTES
				AI	DI	AO	DO	SW		TYPE	RTU	POINT NAME	
CP-100	WASTE SLUDGE DEWATERING AND DISPOSAL	REPLACE EXISTING WITH NEW SIEMENS S7 PLC	**SLUDGE XFER PUMP #1 FLOW RATE**	**X**					**NEW**	**FLOW METER**	**RTU0250I**	**IT0250FIT1001**	**4**
			SLUDGE XFER PUMP #2 FLOW RATE	**X**					**NEW**	**FLOW METER**	**RTU0250I**	**IT0250FIT1002**	**4**
			SLUDGE XFER PUMP #3 FLOW RATE	**X**					**NEW**	**FLOW METER**	**RTU0250I**	**IT0250FIT1003**	**4**
			BELT PRESS #1 STATUS		**X**				**EXISTING**	**LOCAL CONTROL PANEL**	**RTU0250I**	**XT0250DYN961**	**2**
			BELT PRESS #1 BELT SPEED	**X**							**RTU0250I**	**IT0250SI961**	**4**
			BELT PRESS #1 E-STOP STATUS		**X**						**RTU0250I**	**XT0250ES961**	**4**
			BELT PRESS #1 HYD SYS STATUS		**X**						**RTU0250I**	**XT0250DYN961A**	**2**
			BELT PRESS #1 LOW WASH WATER PRES		**X**						**RTU0250I**	**XT0250PAL961**	**2**
			BELT PRESS #1 WASH WATER PUMP STATUS		**X**						**RTU0250I**	**XT0250DYN961B**	**2**
			BELT PRESS #2 STATUS		**X**				**EXISTING**	**LOCAL CONTROL PANEL**	**RTU0250I**	**XT0250DYN962**	**2**
			BELT PRESS #2 BELT SPEED	**X**							**RTU0250I**	**IT0250SI962**	**4**
			BELT PRESS #2 E-STOP STATUS		**X**						**RTU0250I**	**XT0250ES962**	**4**
			BELT PRESS #2 HYD SYS STATUS		**X**						**RTU0250I**	**XT0250DYN962A**	**2**
			BELT PRESS #2 LOW WASH WATER PRES		**X**						**RTU0250I**	**XT0250PAL962**	**2**
			BELT PRESS #2 WASH WATER PUMP STATUS		**X**						**RTU0250I**	**XT0250DYN962B**	**2**
			BELT PRESS #3 STATUS		**X**				**EXISTING**	**LOCAL CONTROL PANEL**	**RTU0250I**	**XT0250DYN963**	**2**
			BELT PRESS #3 BELT SPEED	**X**							**RTU0250I**	**IT0250SI963**	**4**
			BELT PRESS #3 E-STOP STATUS		**X**						**RTU0250I**	**XT0250ES963**	**4**
			BELT PRESS #3 HYD SYS STATUS		**X**						**RTU0250I**	**XT0250DYN963A**	**2**
			BELT PRESS #3 LOW WASH WATER PRES		**X**						**RTU0250I**	**XT0250PAL963**	**2**
			BELT PRESS #3 WASH WATER PUMP STATUS		**X**						**RTU0250I**	**XT0250DYN963B**	**2**
			CONVEYER CHECK VALVE #1		**X**				**EXISTING**	**FIELD DEVICE**	**RTU0250I**	**XT0250DYN971**	**2**
			CONVEYER CHECK VALVE #2		**X**				**EXISTING**	**FIELD DEVICE**	**RTU0250I**	**XT0250DYN972**	**2**

LPC GROUP	PROCESS	PLC	POINT DESCRIPTION	POINT TYPE					FIELD DEVICE		POINT IDENTIFICATION		NOTES
				AI	DI	AO	DO	SW		TYPE	RTU	POINT NAME	
NOTES:													
1. DEMOLISH EXISTING FIELD DEVICE, WIRING, & RACEWAY. DELETE SOFTWARE POINT ASSIGNMENT & ASSOCIATED SOFTWARE PROGRAMMING. DELETE POINT FROM SCADA USER INTERFACE.													
2. REUSE EXISTING FIELD DEVICE, WIRING, AND RACEWAY. RECONNECT EXISTING WIRING TO NEW PLC I/O, REPROGRAM USING ASSIGNED POINT NAME, RETAIN EXISTING FUNCTIONALITY AND SCADA USER INTERFACE. TEST & COMMISSION.													
3. PROVIDE NEW FIELD DEVICE. RECONNECT TO EXISTING WIRING IN EXISTING RACEWAY. RECONNECT TO NEW PLC I/O, RETAIN EXISTING FUNCTIONALITY AND SCADA USER INTERFACE. TEST & COMMISSION.													
4. PROVIDE NEW FIELD DEVICE WITH NEW WIRING AND NEW RACEWAY. CONNECT TO NEW PLC I/O. ASSIGN POINT NAME AS INDICATED AND INTEGRATE MONITORING AND CONTROL FUNCTIONALITY INTO SCADA USER INTERFACE. TEST & COMMISSION.													
5. NEW FIELD DEVICE WITH NEW WIRING AND NEW RACEWAY AS PART OF MANUFACTURER'S EQUIPMENT CONTROL SYSTEM. PROVIDE & TERMINATE FIELD I/O CONNECTIONS PER MFG. INSTRUCTIONS. INTEGRATE MONITORING AND CONTROL FUNCTIONALITY INTO SCADA USER INTERFACE. TEST & COMMISSION.													
6. PROVIDE NEW FIELD DEVICE WITH NEW WIRING AND NEW RACEWAY. CONNECT TO MANUFACTURER'S EQUIPMENT CONTROL SYSTEM. TERMINATE FIELD I/O CONNECTIONS PER MFG. INSTRUCTIONS. INTEGRATE MONITORING AND CONTROL FUNCTIONALITY INTO SCADA USER INTERFACE. TEST & COMMISSION.													
7. PROVIDE NEW I/O SIGNAL WIRING IN EXISTING RACEWAY. RETAIN AND RECONNECT EXISTING FIELD DEVICE AND PLC I/O. RETAIN EXISTING CONTROL FUNCTIONALITY AND SCADA USER INTERFACE. TEST & COMMISSION.													

	PROCESS	PLC	POINT DESCRIPTION	POINT TYPE					FIELD DEVICE		POINT IDENTIFICATION		NOTES
				AI	DI	AO	DO	SW		TYPE	RTU	EXISTING POINT NAME	
	DIGESTER BLOWERS (NEW)	NEW SIEMENS S7-315-2NP/DP	BLOWER #1 RUN STATUS		X				NEW	LOCAL CNTRL PNL RELAY	**NEW 240E**	XT0240MY801	6
			BLOWER #1 ALARM		X				NEW	LOCAL CNTRL PNL RELAY	**NEW 240E**	XT0240MA801	6
			BLOWER #1 FAULT		X				NEW	LOCAL CNTRL PNL RELAY	**NEW 240E**	XT0240MSA801	6
			BLOWER #1 MOTOR TEMP	X					NEW	BLOWER CNTRL PNL 4-20mA	**NEW 240E**	IT0240TIM801	6
			BLOWER #1 INBOARD BEARING TEMP	X					NEW	BLOWER CNTRL PNL 4-20mA	**NEW 240E**	IT0240TIB801	6
			BLOWER #1 OUTBOARD BEARING TEMP	X					NEW	BLOWER CNTRL PNL 4-20mA	**NEW 240E**	IT0240TOB801	6
			BLOWER #1 OIL TEMP	X					NEW	BLOWER CNTRL PNL 4-20mA	**NEW 240E**	IT0240TIL801	6
			BLOWER #2 RUN STATUS		X				NEW	LOCAL CNTRL PNL RELAY	**NEW 240E**	XT0240MY802	6
			BLOWER #2 ALARM		X				NEW	LOCAL CNTRL PNL RELAY	**NEW 240E**	XT0240MA802	6
			BLOWER #2 FAULT		X				NEW	LOCAL CNTRL PNL RELAY	**NEW 240E**	XT0240MSA802	6
			BLOWER #2 MOTOR TEMP	X					NEW	BLOWER CNTRL PNL 4-20mA	**NEW 240E**	IT0240TIM802	6
			BLOWER #2 INBOARD BEARING TEMP	X					NEW	BLOWER CNTRL PNL 4-20mA	**NEW 240E**	IT0240TIB802	6
			BLOWER #2 OUTBOARD BEARING TEMP	X					NEW	BLOWER CNTRL PNL 4-20mA	**NEW 240E**	IT0240TOB802	6
			BLOWER #2 OIL TEMP	X					NEW	BLOWER CNTRL PNL 4-20mA	**NEW 240E**	IT0240TIL802	6
			BLOWER #3 RUN STATUS		X				NEW	LOCAL CNTRL PNL RELAY	**NEW 240E**	XT0240MY803	6
			BLOWER #3 ALARM		X				NEW	LOCAL CNTRL PNL RELAY	**NEW 240E**	XT0240MA803	6
			BLOWER #3 FAULT		X				NEW	LOCAL CNTRL PNL RELAY	**NEW 240E**	XT0240MSA803	6
			BLOWER #3 MOTOR TEMP	X					NEW	BLOWER CNTRL PNL 4-20mA	**NEW 240E**	IT0240TIM803	6
			BLOWER #3 INBOARD BEARING TEMP	X					NEW	BLOWER CNTRL PNL 4-20mA	**NEW 240E**	IT0240TIB803	6
			BLOWER #3 OUTBOARD BEARING TEMP	X					NEW	BLOWER CNTRL PNL 4-20mA	**NEW 240E**	IT0240TOB803	6
			BLOWER #3 OIL TEMP	X					NEW	BLOWER CNTRL PNL 4-20mA	**NEW 240E**	IT0240TIL803	6
	AERATION (NEW)		AERATOR #1 VSD START				X		NEW	VARIABLE SPEED DRIVE	**NEW 240E**	YT0240MMH301	3
			AERATOR #1 VSD STOP				X				**NEW 240E**	YT0240MML301	3
			AERATOR #1 VSD BYPASS MODE STATUS		X						**NEW 240E**	XT0240MSY301	3
			AERATOR #1 VSD SPEED CONTROL MODE STATUS		X						**NEW 240E**	XT0240SCY301	3
			AERATOR #1 VSD SPEED CONTROL			X					**NEW 240E**	OT0240SZ301	3
			AERATOR #1 VSD MOTOR SPEED	X							**NEW 240E**	IT0240SI301	3
			AERATOR #1 VSD FAULT		X						**NEW 240E**	XT0240MA301	3
			AERATOR #1 MOTOR RUN STATUS		X				NEW	CURRENT SWITCH	**NEW 240E**	XT0240MY301	3
			AERATOR #1 MOTOR RUN TIME					X			**NEW 240E**	QT0240MQ301	5
			AERATOR #1 DO SETPOINT					X			**NEW 240E**	QT0240AC301	5
			AERATOR #1 LOW OIL PRES		X				NEW	PRESSURE SWITCH	**NEW 240E**	XT0240PSL301	3
			AERATOR #2 VSD START				X		NEW	VARIABLE SPEED DRIVE	**NEW 240E**	YT0240MMH302	3
			AERATOR #2 VSD STOP				X				**NEW 240E**	YT0240MML302	3
			AERATOR #2 VSD BYPASS MODE STATUS		X						**NEW 240E**	XT0240MSY302	3
			AERATOR #2 VSD SPEED CONTROL MODE STATUS		X						**NEW 240E**	XT0240SCY302	3
			AERATOR #2 VSD SPEED CONTROL			X					**NEW 240E**	OT0240SZ302	3
			AERATOR #2 VSD MOTOR SPEED	X							**NEW 240E**	IT0240SI302	3
			AERATOR #2 VSD FAULT		X						**NEW 240E**	XT0240MA302	3
			AERATOR #2 MOTOR RUN STATUS		X				NEW	CURRENT SWITCH	**NEW 240E**	XT0240MY302	3
			AERATOR #2 MOTOR RUN TIME					X			**NEW 240E**	QT0240MQ302	5
			AERATOR #2 DO SETPOINT					X			**NEW 240E**	QT0240AC302	5
			AERATOR #2 LOW OIL PRES		X				NEW	PRESSURE SWITCH	**NEW 240E**	XT0240PSL302	3

	PROCESS	PLC	POINT DESCRIPTION	POINT TYPE					FIELD DEVICE		POINT IDENTIFICATION		NOTES
				AI	DI	AO	DO	SW		TYPE	RTU	EXISTING POINT NAME	
	AERATION (NEW)	NEW SIEMENS S7-315-2NP/DP	AERATOR #3 VSD START				X		NEW	VARIABLE SPEED DRIVE	**NEW 240E**	YT0240MMH303	3
			AERATOR #3 VSD STOP				X				**NEW 240E**	YT0240MML303	3
			AERATOR #3 VSD BYPASS MODE STATUS		X						**NEW 240E**	XT0240MSY303	3
			AERATOR #3 VSD SPEED CONTROL MODE STATUS		X						**NEW 240E**	XT0240SCY303	3
			AERATOR #3 VSD SPEED CONTROL			X					**NEW 240E**	OT0240SZ303	3
			AERATOR #3 VSD MOTOR SPEED	X							**NEW 240E**	IT0240SI303	3
			AERATOR #3 VSD FAULT		X						**NEW 240E**	XT0240MA303	3
			AERATOR #3 MOTOR RUN STATUS		X				NEW	CURRENT SWITCH	**NEW 240E**	XT0240MY303	3
			AERATOR #3 MOTOR RUN TIME					X			**NEW 240E**	QT0240MQ303	5
			AERATOR #3 DO CONCENTRATION	X					NEW	DO SENSOR	**NEW 240E**	IT0240AI303	3
			AERATOR #3 DO SENSOR FAULT		X						**NEW 240E**	XT0240AA303	3
			AERATOR #3 DO SETPOINT					X			**NEW 240E**	QT0240AC303	5
			AERATOR #3 LOW OIL PRES		X				NEW	PRESSURE SWITCH	**NEW 240E**	XT0240PSL303	3
			AERATOR #4 VSD START				X		NEW	VARIABLE SPEED DRIVE	**NEW 240E**	YT0240MMH304	3
			AERATOR #4 VSD STOP				X				**NEW 240E**	YT0240MML304	3
			AERATOR #4 VSD BYPASS MODE STATUS		X						**NEW 240E**	XT0240MSY304	3
			AERATOR #4 VSD SPEED CONTROL MODE STATUS		X						**NEW 240E**	XT0240SCY304	3
			AERATOR #4 VSD SPEED CONTROL			X					**NEW 240E**	OT0240SZ304	3
			AERATOR #4 VSD MOTOR SPEED	X							**NEW 240E**	IT0240SI304	3
			AERATOR #4 VSD FAULT		X						**NEW 240E**	XT0240MA304	3
			AERATOR #4 MOTOR RUN STATUS		X				NEW	CURRENT SWITCH	**NEW 240E**	XT0240MY304	3
			AERATOR #4 MOTOR RUN TIME					X			**NEW 240E**	QT0240MQ304	5
			AERATOR #4 DO CONCENTRATION	X					NEW	DO SENSOR	**NEW 240E**	IT0240AI304	3
			AERATOR #4 DO SENSOR FAULT		X						**NEW 240E**	XT0240AA304	3
			AERATOR #4 DO SETPOINT					X			**NEW 240E**	QT0240AC304	5
			AERATOR #4 LOW OIL PRES		X				NEW	PRESSURE SWITCH	**NEW 240E**	XT0240PSL304	3
			AERATOR #5 VSD START				X		NEW	VARIABLE SPEED DRIVE	**NEW 240E**	YT0240MMH305	3
			AERATOR #5 VSD STOP				X				**NEW 240E**	YT0240MML305	3
			AERATOR #5 VSD BYPASS MODE STATUS		X						**NEW 240E**	XT0240MSY305	3
			AERATOR #5 VSD SPEED CONTROL MODE STATUS		X						**NEW 240E**	XT0240SCY305	3
			AERATOR #5 VSD SPEED CONTROL			X					**NEW 240E**	OT0240SZ305	3
			AERATOR #5 VSD MOTOR SPEED	X							**NEW 240E**	IT0240SI305	3
			AERATOR #5 VSD FAULT		X						**NEW 240E**	XT0240MA305	3
			AERATOR #5 MOTOR RUN STATUS		X				NEW	CURRENT SWITCH	**NEW 240E**	XT0240MY305	3
			AERATOR #5 MOTOR RUN TIME					X			**NEW 240E**	QT0240MQ305	5
			AERATOR #5 DO SETPOINT					X			**NEW 240E**	QT0240AC305	5
			AERATOR #5 LOW OIL PRES		X				NEW	PRESSURE SWITCH	**NEW 240E**	XT0240PSL305	3

	PROCESS	PLC	POINT DESCRIPTION	POINT TYPE					FIELD DEVICE		POINT IDENTIFICATION		NOTES
				AI	DI	AO	DO	SW		TYPE	RTU	EXISTING POINT NAME	
	AERATION (NEW)	NEW SIEMENS S7-315-2NP/DP	AERATOR #6 VSD START				X		NEW	VARIABLE SPEED DRIVE	**NEW 240E**	YT0240MMH306	3
			AERATOR #6 VSD STOP				X				**NEW 240E**	YT0240MML306	3
			AERATOR #6 VSD BYPASS MODE STATUS		X						**NEW 240E**	XT0240MSY306	3
			AERATOR #6 VSD SPEED CONTROL MODE STATUS		X						**NEW 240E**	XT0240SCY306	3
			AERATOR #6 VSD SPEED CONTROL			X					**NEW 240E**	OT0240SZ306	3
			AERATOR #6 VSD MOTOR SPEED	X							**NEW 240E**	IT0240SI306	3
			AERATOR #6 VSD FAULT		X						**NEW 240E**	XT0240MA306	3
			AERATOR #6 MOTOR RUN STATUS		X				NEW	CURRENT SWITCH	**NEW 240E**	XT0240MY306	3
			AERATOR #6 MOTOR RUN TIME					X			**NEW 240E**	QT0240MQ306	5
			AERATOR #6 DO SETPOINT					X			**NEW 240E**	QT0240AC306	5
			AERATOR #6 LOW OIL PRES		X				NEW	PRESSURE SWITCH	**NEW 240E**	XT0240PSL306	3
			AERATOR #7 VSD START				X		NEW	VARIABLE SPEED DRIVE	**NEW 240E**	YT0240MMH307	3
			AERATOR #7 VSD STOP				X				**NEW 240E**	YT0240MML307	3
			AERATOR #7 VSD BYPASS MODE STATUS		X						**NEW 240E**	XT0240MSY307	3
			AERATOR #7 VSD SPEED CONTROL MODE STATUS		X						**NEW 240E**	XT0240SCY307	3
			AERATOR #7 VSD SPEED CONTROL			X					**NEW 240E**	OT0240SZ307	3
			AERATOR #7 VSD MOTOR SPEED	X							**NEW 240E**	IT0240SI307	3
			AERATOR #7 VSD FAULT		X						**NEW 240E**	XT0240MA307	3
			AERATOR #7 MOTOR RUN STATUS		X				NEW	CURRENT SWITCH	**NEW 240E**	XT0240MY307	3
			AERATOR #7 MOTOR RUN TIME					X			**NEW 240E**	QT0240MQ307	5
			AERATOR #7 DO CONCENTRATION	X					NEW	DO SENSOR	**NEW 240E**	IT0240AI307	3
			AERATOR #7 DO SENSOR FAULT		X						**NEW 240E**	XT0240AA307	3
			AERATOR #7 DO SETPOINT					X			**NEW 240E**	QT0240AC307	5
			AERATOR #7 LOW OIL PRES		X				NEW	PRESSURE SWITCH	**NEW 240E**	XT0240PSL307	3
			AERATOR #8 VSD START				X		NEW	VARIABLE SPEED DRIVE	**NEW 240E**	YT0240MMH308	3
			AERATOR #8 VSD STOP				X				**NEW 240E**	YT0240MML308	3
			AERATOR #8 VSD BYPASS MODE STATUS		X						**NEW 240E**	XT0240MSY308	3
			AERATOR #8 VSD SPEED CONTROL MODE STATUS		X						**NEW 240E**	XT0240SCY308	3
			AERATOR #8 VSD SPEED CONTROL			X					**NEW 240E**	OT0240SZ308	3
			AERATOR #8 VSD MOTOR SPEED	X							**NEW 240E**	IT0240SI308	3
			AERATOR #8 VSD FAULT		X						**NEW 240E**	XT0240MA308	3
			AERATOR #8 MOTOR RUN STATUS		X				NEW	CURRENT SWITCH	**NEW 240E**	XT0240MY308	3
			AERATOR #8 MOTOR RUN TIME					X			**NEW 240E**	QT0240MQ308	5
			AERATOR #8 DO CONCENTRATION	X					NEW	DO SENSOR	**NEW 240E**	IT0240AI308	3
			AERATOR #8 DO SENSOR FAULT		X						**NEW 240E**	XT0240AA308	3
			AERATOR #8 DO SETPOINT					X			**NEW 240E**	QT0240AC308	5
			AERATOR #8 LOW OIL PRES		X				NEW	PRESSURE SWITCH	**NEW 240E**	XT0240PSL308	3

	PROCESS	PLC	POINT DESCRIPTION	POINT TYPE					FIELD DEVICE		POINT IDENTIFICATION		NOTES
				AI	DI	AO	DO	SW		TYPE	RTU	EXISTING POINT NAME	
	CLARIFIERS	NEW SIEMENS S7-315	CLARIFIER #1 INLET LIFT GATE POSITION OPEN		X				NEW	VALVE ACTUATOR	**NEW 240E**	YT0240ZH391	3
			CLARIFIER #1 INLET LIFT GATE POSITION CLOSED		X				NEW	VALVE ACTUATOR	**NEW 240E**	YT0240ZL391	3
			CLARIFIER #2 INLET LIFT GATE POSITION OPEN		X				NEW	VALVE ACTUATOR	**NEW 240E**	YT0240ZH392	3
			CLARIFIER #2 INLET LIFT GATE POSITION CLOSED		X				NEW	VALVE ACTUATOR	**NEW 240E**	YT0240ZL392	3
			CLARIFIER #3 INLET LIFT GATE POSITION OPEN		X				NEW	VALVE ACTUATOR	**NEW 240E**	YT0240ZH393	3
			CLARIFIER #3 INLET LIFT GATE POSITION CLOSED		X				NEW	VALVE ACTUATOR	**NEW 240E**	YT0240ZL393	3
	SCUM SEP		SCUM SUMP HI LEVEL ALARM		X				NEW	LOCAL CNTRL PNL RELAY	**NEW 240E**	XT0240LAH460	6
			SCUM SUMP LO LEVEL ALARM		X				NEW	LOCAL CNTRL PNL RELAY	**NEW 240E**	XT0240LAL460	6
			SCUM PUMP #1 RUN STATUS		X				NEW	LOCAL CNTRL PNL RELAY	**NEW 240E**	XT0240MY461	6
			SCUM PUMP #1 FAULT ALARM		X				NEW	LOCAL CNTRL PNL RELAY	**NEW 240E**	XT0240MA461	6
			SCUM PUMP #2 RUN STATUS		X				NEW	LOCAL CNTRL PNL RELAY	**NEW 240E**	XT0240MY462	6
			SCUM PUMP #2 FAULT ALARM		X				NEW	LOCAL CNTRL PNL RELAY	**NEW 240E**	XT0240MA462	6
	AIR SUPPLY (E)	EXISTING SIEMENS TI 545	BLOWER #1 STATUS		X				EXISTING	MOTOR STARTER	rtu0240A	XT0240DYN301	1
			BLOWER #1 PHASE UNBALANCE		X				EXISTING	MOTOR STARTER	rtu0240A	XT0240EDS301	1
			BLOWER #2 STATUS		X				EXISTING	MOTOR STARTER	rtu0240A	XT0240DYN302	1
			BLOWER #2 PHASE UNBALANCE		X				EXISTING	MOTOR STARTER	rtu0240A	XT0240EDS302	1
			BLOWER #3 STATUS		X				EXISTING	MOTOR STARTER	rtu0240A	XT0240DYN303	1
			BLOWER #3 PHASE UNBALANCE		X				EXISTING	MOTOR STARTER	rtu0240A	XT0240EDS303	1
	AERATION (EXISTING)		AERATOR #1 STATUS		X				EXISTING	MOTOR STARTER	rtu0240A	XT0240DYN331	1
			AERATOR #1 ALARM		X				EXISTING	MOTOR STARTER	rtu0240A	XT0240UA331	1
			AERATOR #2 STATUS		X				EXISTING	MOTOR STARTER	rtu0240A	XT0240DYN332	1
			AERATOR #2 ALARM		X				EXISTING	MOTOR STARTER	rtu0240A	XT0240UA332	1
			AERATOR #3 STATUS		X				EXISTING	MOTOR STARTER	rtu0240A	XT0240DYN333	1
			AERATOR #3 ALARM		X				EXISTING	MOTOR STARTER	rtu0240A	XT0240UA333	1
			AERATOR #4 STATUS		X				EXISTING	MOTOR STARTER	rtu0240A	XT0240DYN334	1
			AERATOR #4 ALARM		X				EXISTING	MOTOR STARTER	rtu0240A	XT0240UA334	1
			AERATOR #5 STATUS		X				EXISTING	MOTOR STARTER	rtu0240A	XT0240DYN335	1
			AERATOR #5 ALARM		X				EXISTING	MOTOR STARTER	rtu0240A	XT0240UA335	1
			AERATOR #6 STATUS		X				EXISTING	MOTOR STARTER	rtu0240A	XT0240DYN336	1
			AERATOR #6 ALARM		X				EXISTING	MOTOR STARTER	rtu0240A	XT0240UA336	1
			AERATOR #7 STATUS		X				EXISTING	MOTOR STARTER	rtu0240A	XT0240DYN337	1
			AERATOR #7 ALARM		X				EXISTING	MOTOR STARTER	rtu0240A	XT0240UA337	1
			AERATOR #8 STATUS		X				EXISTING	MOTOR STARTER	rtu0240A	XT0240DYN338	1
			AERATOR #8 ALARM		X				EXISTING	MOTOR STARTER	rtu0240A	XT0240UA338	1

	PROCESS	PLC	POINT DESCRIPTION	POINT TYPE					FIELD DEVICE		POINT IDENTIFICATION		NOTES
				AI	DI	AO	DO	SW		TYPE	RTU	EXISTING POINT NAME	
	EFFLUENT TREATMENT	EXISTING SIEMENS TI 545	PLC TIME RESET 0:00AM			X					rtu0240B	XT0240_TIME_RST	2
			BLEACH FEED #1			X					rtu0240B	OT0240DD511	2
			BLEACH FEED #2			X					rtu0240B	OT0240DD512	2
			SODIUM BISULFITE FEED #1			X			NEW	METERING PUMP	rtu0240B	OT0240DD521	4
			SODIUM BISULFITE FEED #2			X			NEW	METERING PUMP	rtu0240B	OT0240DD522	4
			SODIUM BISULFITE TANK #1 LEVEL	X					NEW	LEVEL SENSOR	rtu0240B	IT0240LT521	3
			SODIUM BISULFITE TANK #2 LEVEL	X					NEW	LEVEL SENSOR	rtu0240B	IT0240LT522	3
			PREWEIR GREENRIDGE (30 MIN. ALARM)			X					rtu0240B	XT0240AIT501A	2
			POSTWEIR	X							rtu0240B	IT0240AIT502A	2
			MIXPOINT	X							rtu0240B	IT0240AIT503A	2
			PREWEIR	X							rtu0240B	IT0240AIT501A	2
			PREWEIR (SPARE)	X							rtu0240B	IT0240AIT501Z	2
	DISCHARGE		EFFLUENT FLOW	X							rtu0240B	IT0240FIT601A	2
			GR TP: EFF.FLOW-COUNTER(TASKCODE)10^3 GAL?					X			rtu0240B	QT0240FIT601E	2
			GR TP: EFF. FLOW-COUNTER (TASKCODE)@8AM					X			rtu0240B	QT0240FIT601F	2
			GR TP: TOTAL TEMP EFF.FLOW-COUNTER					X			rtu0240B	QT0240TEM601E	2

NOTES:

1. DISCONNECT EXISTING FIELD DEVICE. REMOVE WIRING & RACEWAYS WHERE POSSIBLE. LABEL EXISTING PLC I/O AS SPARE. DELETE SOFTWARE POINT ASSIGNMENT & ASSOCIATED SOFTWARE PROGRAMMING. DELETE POINT FROM SCADA USER INTERFACE.

2. RETAIN EXISTING FIELD DEVICE & CONTROLS "AS-IS". NOT IN CONTRACT.

3. PROVIDE NEW FIELD DEVICE, WIRING, AND RACEWAY AS INDICATED. CONNECT TO NEW PLC I/O, PROGRAM USING ASSIGNED POINT NAME AND INTEGRATE CONTROL AND MONITORING INTO SCADA USER INTERFACE. TEST & COMMISSION.

4. PROVIDE NEW FIELD DEVICE, WIRING, AND RACEWAY AS INDICATED. CONNECT TO EXISTING PLC I/O. RETAIN EXISTING POINT NAME, SOFTWARE PROGRAMMING, & SCADA USER INTERFACE. TEST & RECOMMISSION.

5. ASSIGN SOFTWARE POINT AS INDICATED, PROVIDE NEW SOFTWARE PROGRAMMING AND INTEGRATE INTO SCADA USER INTERFACE. TEST & COMMISSION.

6. PROVIDE NEW WIRING, AND RACEWAY TERMINATED AT LOCAL EQUIPMENT CONTROL PANEL AS INDICATED. CONNECT TO NEW PLC I/O, PROGRAM USING ASSIGNED POINT NAME AND INTEGRATE CONTROL AND MONITORING INTO SCADA USER INTERFACE. TEST & COMMISSION.

SECTION 13315

PROCESS INSTRUMENTATION AND CONTROL - PRODUCTS

PART 1 GENERAL

1.01 MEASUREMENT AND PAYMENT

A. No separate payment will be made for work performed under this Section.
B. Include payment in lump sum bid for work of which this is a component part.

1.02 SECTION INCLUDES

A. Programmable logic controllers (PLCs), remote input/output (I/O) units, network communications equipment, field sensors and devices, control panel components including switches and relays.

1.03 RELATED WORK

A. Section 13300 Process Instrumentation and Controls – General Provisions.
B. Section 13310 SCADA Software Engineering Security and Quality Requirements
C. Section 13441 Pump Station Controls
D. Section 13471 Control Cabinet Enclosures
E. Section 13500 Communications Backbone Cabling
F. Section 13510 Communications Horizontal Cabling
G. Section 13600 Control & Instrumentation Cable
H. Division 16 Electrical.

1.04 REFERENCES

A. National Electrical Manufacturers Association (NEMA).

1. NEMA ICS 1 - General Standards for Industrial Control and Systems.

2. NEMA ICS 2 - Standards for Industrial Control Devices, Controllers and Assemblies.

3. NEMA ICS 3 - Industrial Systems.

4. NEMA ICS 6 - Enclosures for Industrial Controls and Systems.

5. NEMA ST 1 - Standard for Specialty Transformers (Except General Purpose Type).

B. Instrument Society of America (ISA).

C. Underwriters Laboratories, Inc. (UL).

D. Factory Mutual (FM).

E. Institute of Electrical and Electronic Engineers (IEEE).

F. National Fire Protection Association (NFPA). ANSI/NFPA 70 - National Electrical Code (NEC).

G. Joint Industrial Council (JIC).

H. American National Standards Institute (ANSI).

I. International Electrotechnical Commission (IEC).

1.05 SUBMITTALS

A. Submit product data under provisions of Section 01330 - Submittal Procedures.

1. Submit in complete packages grouped to permit review of related items as outlined in these specifications.

2. Bind submittals in three-ring binders with complete indexing and tab dividers. Completely tag and label equipment information to correspond with Drawings.

3. Review of Submittals will be for conformance to Contract Documents and for application to specified functions.

1.06 SPARE PARTS

A. Provide at least 25% of each PLC module furnished as spare parts, excluding CPU. Minimum spare parts will include the following for each type furnished:

1. One spare of each type I/O module with channel capacity equivalent or greater to any provided module.

2. One spare PLC power supply.

3. One spare CPU.

4. One spare Communication Processor.

5. One spare Interface Module

6. Two spare Laser Printer toner cartridges

PART 2 P R O D U C T S

2.01 PROGRAMMABLE LOGIC CONTROLLER (PLC)

A. Manufacturer and Product. **Note: Product Manufacturer & Models Must Provide Seamless Compatibility With Existing Siemens SCADA System**

1. Siemens SIMTAC S7-300 Series

2. Substitute or alternate products are not acceptable unless approved in writing prior to bid.

B. Description: Modular Programmable Logic Controllers including the following modular components:

1. Central Processing Unit (CPU) Modules

2. Communications and Interface Modules

3. Input/Output Signal Modules

4. Power Supply Modules

5. Mounting Rails

C. General Service Conditions

1. Temperature: 32 to 140 degrees F, horizontally installed.

2. Humidity: 5 to 95 percent, non-condensing.

3. Electromagnetic Compatibility: Noise suppression to EN 50082-2, Noise emission to EN50081-2.

4. Vibration: IEC 68, Part 2-6/10 to 58 Hz.

5. Shock: IEC 68, Part 2-27/half-sine: 15 g peak, 11 milliseconds.

D. Configurations

1. Processor Rack: Include processor, power supply, micro memory card, communication modules, and input/output modules with front connectors.

2. Expansion Unit: Include interface module, power supply, communication module, input/output modules, front connectors and necessary connection cables.

3. Mounting Rail: Provide passive mounting rail for processor, power supply, communication, and input/output modules.

E. Central Processor Unit Modules

1. Integrated Memory: Internal 384 KB minimum, 128 KB retentive

2. CPU Blocks: 1,024 minimum, 64 KB each

3. Digital Input/Output Channel Capacity: 16,384 minimum.

4. Analog Input/Output Channel Capacity: 1,024 minimum.

5. I/O Address Memory: 2,048 bytes.

6. Typical Execution Times:
   a. Bit & Word Operations: <0.1 microsecond
   b. Fixed Point Arithmetic: <0.2 microsencond
   c. Floating Point Arithmetic: <0.5 microseconds

7. Integral Real Time Clock with Backup Battery

8. Storage Memory: Micro Memory Card, 2 MB minimum capacity.

9. Communications Ports

F. Communications

1. PROFINET Industrial Ethernet

   a. Industrial Ethernet IEE 802.3
   b. PROFINET IEC 61158/IEC 61784 Compatible

c. 10BASE-T, 100 BASE-T Support
d. IEC 60603-7 Isolated RJ45 Interface
e. Integral 2-Port Autosensing Switch
f. TCP/IP, ISO over TCP/IP, UDP, Web Server
g. Integral Isochronous Mode Support

2. PROFIBUS

a. PROFIBUS IEC 61158/EN 50170 Distributed I/O Mode (DP) support as master or slave
b. Multi-Point Interface (MPI) compatible
c. EIA Isolated RS-485 Interface
d. 12 Mbit/Second Minimum transmission rate

G. Input/Output Signal Modules

1. General Requirements
a. Hot swapable design
b. Provide dedicated function modules only with not less than 4 or not more 16 channels per module.
c. Provide expansion I/O modules with dedicated communications interface and power supply modules.

2. Digital Input Characteristics

a. 24 V DC Load Voltage
b. Optically Isolated
c. Input Characteristic Curve compliant with IEC 61131 Type 1
d. < 5.0 ms response time
e. LED channel status indicator

3. Digital Output Characteristics

a. 24 V DC Load Voltage
b. Optically Isolated
c. Input Characteristic Curve compliant with IEC 61131 Type 1
d. < 5.0 ms response time

4. Analog Input Characteristics

a. Selectable for 1 to 5V, 0 to 10V -10 to +10V, 0 to 20mA, -20 to +20mA, or 4 to 20mA voltage/current span.
b. Optional Thermocouple or Resistance Thermal Device (RTD) selectable input with parametric characteristic linearization.
c. 100 k ohm minimum input impedance (voltage input)
d. 100 ohm maximum input resistance (current input)

e. 12 bit minimum resolution, 60 ms minimum sampling rate with selectable integration span
f. 0.5% maximum A/D error
g. 500 VDC minimum channel-to-channel isolation

5. Analog Output Characteristics

a. Selectable for 1 to 5V, 0 to 10V -10 to +10V, 0 to 20mA, -20 to +20mA, or 4 to 20mA voltage/current span.
b. Provided with internal short circuit protection.
c. 1 k ohm minimum, 1 micro-farad maximum voltage load drive impedance.
d. 500 ohm maximum, 10 mH minimum current load drive impedance.
e. 12 bit minimum resolution, 0.8 ms minimum conversion time.
f. < 0.5 ms settling time (non-inductive loads)
g. 0.5% maximum A/D error
h. 500 VDC minimum channel-to-channel isolation
i. With configurable diagnostics and integrated load fault alarm

H. Power Supply

1. Input:
a. 85-132 VAC
b. 47-63 HZ
c. 20 ms mains buffering.

2. Output:
a. 24 VDC
b. 5 amp nominal
c. +/- 3% voltage regulation
d. 40 mV nominal ripple
e. -30 db maximum hash noise to 20 mHz, EN 55011 Class A and EN 61000-6-2 compliant

3. Closed Loop Control:
a. 0.3% Dynamic mains compensation
b. 3% Dynamic load smoothing
c. 5 ms settling time

4. Protection & Monitoring

a. Independent output overvoltage protection with auto restart
b. Output current inrush limited with over-current protection
c. UL 508 Listed
d. Class 1 primary/secondary separation

e. EN 60529 IP20

5. Mounting: On PLC Mounting Rail

6. Front Panel: Green status LED, On/Off Switch

7. Output Terminations: Screw terminations with connector to PLC CPU, plus additional terminations for wiring to other control system 24 VDC needs.

2.02 WORKSTATION & LOCAL AREA NETWORK (LAN) EQUIPMENT

A. Managed Network Switches

1. Manufacturer and Product: Siemens SCALANCE X-200 Series Network Switches **Note: Product Manufacturer & Models Must Provide Seamless Compatibility With Existing Siemens Managed System. Substitute or alternate products not allowed without engineering approval prior to bid.**
2. Description: Managed, fault-tolerant, industrial Ethernet switches with two (2)100Mbit/s multi-mode fiber optical ports, four (4) to eight (8) 10/100Base-T ports, redundant power supply, resettable error signaling contacts, integrated PROFINET support & network management interface.

B. Operator Workstation Monitors

1. Dual 24" LED widescreen with 1920 x 1080 minimum resolution.
2. Warranty & Support: 12 months

2.03 FIELD DEVICES

A. Tank Level Sensors – Magnetic Level Gage

1. Manufacturers: Emerson Rosemount, Penberthy Inc., or equal.

2. Chamber: 2" CPVC with fiberglass armored or 300 series stainless steel shield and fiberglass flanged tank connections

3. Internal magnetic float: select for specific gravity of sodium bisulfate

4. External magnetic indicator: hermetically sealed and mounted outside of float chamber, photo-etched stainless steel scale calibrated in one foot increments.

5. Magnetostrictive Level Transmitter
   a. Non-wetted, double sealed construction
   b. 316 SS NEMA 4X housing
   c. 2-wire, loop powered, 24 VDC
   d. 4-20 mA scalable output,
   e. 0.01% accuracy
   f. Locally configurable with LCD display
   g. Mounted within 5 ft. of grade level for service.

6. Accessories: Provide sight gauge chamber with isolation and drain valves.

B. Ultrasonic Level Sensors

1. Manufacturers: Rosemount, Flowline, Gems, or approved equal

2. Construction: Aluminum housing, Nema 4X with 2" NPT process connection and PVC mounting flange. Provide with PVDF wetted parts.

3. Range: 12" minimum, 72" to 300" maximum as selected for application

4. Electrical
   a. 4-20 mA scalable output with HART communications.
   b. 0.5% accuracy
   c. Locally configurable
   d. Remote LCD display & programming buttons.

C. Pressure Sensors

1. Manufacturers: Rosemount 2051, 2088 or approved equal

2. Housing: Nema 4X with 2" NPT process connection and 300-series SS accessory mounting flange.

3. Type & Range: Static (gage) or differential as required for application, field verify range for existing process.

4. Manifold: Provide with 300 series stainless steel manifold complete with needle valves.

5. Electrical
   a. 2-wire, loop powered, 24VDC
   b. 4-20 mA scalable output with HART communications
   c. Locally configurable
   d. Accuracy: 0.075% of span

D. Flow/Volume Totalizing Meters – Magnetic Type

1. Manufacturers: Emerson, Badger, or approved equal

2. Element Housing: Field verify and match existing piping for process connection. Provide with 300-series SS accessory mounting flange. Lining suitable for wastewater sludge applications.

3. Flow Processor Enclosure: NEMA 4X

4. Range: Field Verify with existing process

5. Electrical
   a. 2-wire, loop powered, 24VDC
   b. 4-20 mA scalable flow rate output
   c. Pulse flow volume totalizing output
   d. Local LCD display
   e. Locally configurable

E. DISSOLVED OXYGEN (DO) SENSORS

1. Furnish one DO sensor for each set of aeration basin trains for a total of four DO sensors. Each sensor will be supplied with its own controller. One sensor will be placed in secondary basin of each train to control both the primary and secondary aerators in that train

2. Luminescent DO sensors shall be provided for continuous.measurement of DO in aqueous solutions. Sensor shall be HACH- LDO probe with SC200 controller, YSI Model 182.

3. Performance Requirements:

   a. Measurement range: 0.01 to 20.00 mg/L
   b. Resolution: 0.01 mg/L
   c. Accuracy
      1) Less than 5 ppm: ± 0.1 ppm
      2) Greater than 5 ppm: ± 0.2 ppm
   d. Repeatability: ± 0.1 ppm
   e. Response Time:
      1) Less than 40 seconds to 90% at 20 °C
      2) Less than 60 seconds to 95% at 20 °C
   f. Temperature sensor: PT100 integrated, external sensor
   g. Temperature range: 0 to 50 °C
   h. Temperature accuracy: ± 0.2°C

4. Probe shall be submersible with stainless steel body, CPVC ends , replaceable sensor cap, and integral cable. Cable length shall be a

minimum of 30-ft

5. Accessories: Provide a ball float mount kit for mounting DO probe within the Aeration Basin. Provide the installation manual. All mounting kit components to be Stainless Steel.

6. Controller: Provide a microprocessor-based sensor controller SC200 capable of accepting two analog signals. Controller shall operate off of 120 ,60Hz. Four electromechanical UL rated relays, with SPDT contacts rated to 120VAC, 5Amps user-configurable . Two analog 4-20 mA outputs shall be provided (one for each input). Enclosure shall be rated NEMA 4X. Provide a weather and sun shield with UV protection screen

F. RADAR LEVEL TRANSMITTER

1. Manufacturers: Rosemount or approved equal

2. Construction: Aluminum housing, NEMA 7 (suitable for Class 1, Div.1 classified area) with 2" NPT process connection and PVC mounting flange. Provide with PVDF wetted parts.

3. Range: 12" minimum, 72" to 300" maximum as selected for application

4. Electrical
   a. 2-wire, loop powered, 24 VDC
   b. 4-20 mA scalable output with HART communications.
   c. 0.5% accuracy
   d. Locally configurable
   e. Integral LCD display & programming buttons.

5. Auxiliary equipment:
   a. One local indicator (4-20 mA) installed in a NEMA 4X enclosure (with window), equipped as minimum with 24VDC power supply, terminal blocks,

2.04 CONTROL SWITCHES AND INDICATOR LIGHTS

G. Manufacturers

1. Automatic Timing and Controls Company.

2. Cutler Hammer.

3. Eagle Signal Company.

4. General Electric Company.

5. Square D Company.

6. Allen Bradley.

7. Siemens

H. Substitutions: Comply with Section 01630 - Product Substitution Procedures.

I. Control Switches

1. Contacts: NEMA ICS 2; at least two Form C contact sets.

2. Contact Ratings: NEMA ICS 2; 120V, 10 ampere inductive.

3. Selector Switch Operators: NEMA ICS 2; heavy-duty, oil-tight, NEMA 4 multi-position rotary selector switch.

4. Push-button Operator: NEMA ICS 2; heavy-duty oil-tight NEMA 4 unguarded and lockable type; black for start, red for stop.

J. Indicator Lights: Red for run, amber or yellow for alarm, green for control mode; LED, oil-tight, 100,000-hour rated life expectancy; rated voltage approximately 125 percent of nominal 120 VAC operating voltage. To be push-to-test type.

2.05 CONTROL RELAYS

A. Contacts: NEMA ICS 2; three Form C contact sets.

B. Rating: NEMA ICS 2; 120 volt, 10 ampere inductive.

C. Coil Voltage: 120 volt, 60 Hz AC.

D. Socket: Turck S3B with coding system, label and label holder (11-pin).

E. Features: 11-pin tube socket relay base, external color-coded test button, mechanical and electrical status indications, impact-resistant thermoplastic case.

F. Manufacturer: Turck, Inc., or approved equal.

G. Spare Units: In addition to units installed, furnish 2 spare units.

2.06 TIME DELAY RELAYS

A. Contacts: NEMA ICS 2; three Form C contact sets.

B. Contact Ratings: NEMA ICS 2; DPDT Class; 120 volt 10 ampere inductive.

C. Coil Voltage: 120 volt 60 Hz AC.

D. Socket: Turck S3B with coding system, label and label holder (11-pin).

E. Description: Control relay as specified above in Paragraph 2.04, with added Time Cube Module as manufactured by Turck, Inc.; series CT3, with on or off delay, as indicated.

F. Features: DIP switch-selectable timing ranges of 0.2 to 3 seconds, 0.8 to 12 seconds, 0.1 to 1.5 minutes and 0.8 to 12 minutes; externally-adjustable graduated time dial; solid-state digital timing system.

G. Spare Units: In addition to units installed, furnish 2 spare units.

PART 3 EXECUTION

3.01 CAPACITIES

A. Configure PLC controls with the following minimum capacities:

1. Provide central processor unit with sufficient memory such that the final operating configuration does not use or occupy more than 50% of total system memory.

2. Provide minimum 25% spare I/O rack space.

3. Provide minimum 25 percent spare I/O channel capacity for each type of I/O module, pre-configured, wired, terminated, and identified as such.

4. Provide low voltage power supplies not exceeding 60% of rated nominal load demand.

B. Connect PLC inputs/outputs including analog inputs through snap-on isolated fused terminal blocks.

C. Separate the AC and control signals from DC and loop signals by at least

6 inches. Provide a barrier between AC and DC within the raceways.

3.02 GENERAL REQUIREMENTS

A. Reference Section 13300 and 13325 for additional execution requirements.

END OF SECTION

SECTION 15257

CHEMICAL STORAGE TANKS

PART 1 GENERAL

1.01 SECTION INCLUDES:

A. This section provides requirements for the installation of high density polyethylene chemical storage tanks, fittings, insulation, and containment sealants. Two (s) 6,500 gallon sodium bisulfite tanks are to be provided.

1.03 RELATED WORK

A. Division 16 – Electrical

1.04 REFERENCE STANDARDS

A. ASTM D638: Standard Test Method for Tensile Properties of Plastics
B. ASTM D648: Standard Test Method for Deflection Temperature of Plastics Under Flexural Load in the Edgewise Position
C. ASTM D746: Specification for Polyethylene Tank Testing
D ASTM D790: Flexural Properties of Unreinforced and Reinforced Plastics and Electrical Insulating Materials
E. ASTM D883: Definitions of Terms Related to Plastics
F. ASTM D1505: Density by Density Gradient Technique
G. ASTM D1693: Environmental Stress Crack Resistance
H. ASTM D1998: Standard Specification for Polyethylene Upright Storage Tanks
I. ARM: Standard Low Temperature Impact Resistance
J. NFPA 704: National Fire Rating System
K. NSF/ANSI Standard 61, AWWA – Drinking Water System Components

1.05 SUBMITTALS

A. Shop Drawings and Product Data

1. Submit shop drawings for tanks and accessory equipment including principal dimensions, location of fittings and unit foundation.

B. Design Data

1. Storage Tank

2. Accessory equipment

C. Test Reports

1. Shop hydrostatic test
2. Submit results of hydrostatic and dynamic testing
3. Inspection Field hydrostatic test
4. Preoperational test
5. In-service test

D. Certificates

1. Submit written verification on the fabricator's letterhead that surface preparation and coating application were performed in accordance with the manufacturer's printed recommendations for the coating system.

E. Manufacturer's Instructions

1. Storage Tank

F. Operation and Maintenance Data

1. Storage Tank
2. Accessory equipment

1.06 QUALITY ASSURANCE

A. Manufacturer Qualifications

1. Tank manufacturer shall have at least five completed installations involving storage of sodium bisulfite, having tanks of the type specified herein, and tanks of comparable size.

2. The installation described above shall have been in service for at least one year without any leakage, deterioration or failures.

1.07 DELIVERY, STORAGE, AND HANDLING

A. Delivery and Storage

1. Inspect materials delivered to site for damage; unload and store with minimum handling.

2. Store materials on-site in enclosures or under protective coverings.

2. Protect materials not suitable for outdoor storage to prevent damage during periods of inclement weather, such as subfreezing temperatures, precipitation, and high winds.

3. Store materials susceptible to deterioration by direct sunlight under cover and avoid damage due to high temperatures.

4. Do not store materials directly on ground.

5. If special precautions are required, prominently and legibly stencil instructions for such precautions on outside of equipment or its crating.

B. Handling

1. Handle storage tanks in such a manner as to ensure delivery to final location in sound, undamaged condition.

2. Take special care not to damage interior and exterior surfaces of storage tank.

3. Make satisfactory repairs to damaged materials at no cost to Government. Carry and do not drag materials.

1.08 WARRANTY

A. Provide warranty under provisions of Section 01610—Basic Product Requirements.

PART 2 PRODUCTS

2.01 TANKS

A. Chemical Storage Requirements.

1. Quantity = 2.

2. Volume = 6,500 gallons each

a. Tank Diameter = 10-ft
b. Tank Height (to bottom of dome) = 12-ft

3. Chemical

   a. Sodium Bisulfite
      Specific gravity -1.3
      38% trade solution (vol.)

4. Pressure. Atmospheric

5. Temperature.

   a. Sodium Bisulfite. Ambient (70°F minimum)

B. Acceptable Manufacturers:

1. Assmann Tanks
2. Poly Processing
3. RTS Plastics
4. ACO Containers
5. Snyder Industries, Inc.
6. Approved Equal

C. Provide High Density Cross-Linked Polyethylene Vertical storage tank, with all accessories as specified.

D. The HDXLPE Tanks shall be as manufactured in accordance with the definitions given in ASTM-D1998 Type I (Standard Specification for Polyethylene Upright Storage Tanks). The tanks shall be manufactured by the rotational molding process.

E. The tanks shall be designed for 1.90 Specific Gravity using a hoop stress value of no greater than 600 psi at 100 degrees F, with a safety factor of no less than 2, using the Barlow Formula for calculating wall thickness. For applications in excess of 100 degrees F design conditions, lower values for the design hoop stress shall be used.

F. The tank shall be molded from a virgin High Density Cross-Linked Polyethylene resin, with no fillers.

G. All dome fittings shall be PVC self-aligning bulkhead type.

H. All fittings which are below the liquid level shall be flange style. There shall be a single 150 lb. ANSI PVC flange and a 1/4-inch gasket attached to the inside tank wall. The flange shall be bolted to the tank from the inside with a minimum of four (4) 1/2-inch diameter all thread bolts with bolt heads encapsulated in black polyethylene. The encapsulation shall be a minimum of 1/4-inch of the threads closest to the bolt head. Each bolt shall have a 1/4-

inch EPDM gasket with head on the inside of the tank.

I. The outlet/drain fitting may have a siphon leg attachment.

J. A molded in fitting is required for tank fittings at the bottom (invert).

K. Impact Test: Shall be done in accordance with ASTM D746. Standard method shall be used in this test.

L. The nominal value for the properties of the polyethylene plastic material shall be as follows, as supplied by the resin suppliers.

Test Procedure	Units	XLPE
Density/ASTM D1505	g/cc	0.940 to 0.945
ESCR Cond. A, F50/ASTM D1693 10 Percent Igepal	Hrs.	>1000
Tensile Strength/ASTM D638	psi	2,600
Flexural Modulus/ASTM D790	psi	1000,000 to 110,000
Heat Distortion Tem./ASTM D648 At 66 psi	Degrees C	67 Degrees
Long Term Hydrostatic (LTHS) (Creep)	psi	900
FDA-grade resin	-	No
UV-stabilized	-	Yes

M. All edges cut out for manway or other openings shall be trimmed to have smooth edges.

N. Bracketed flat surfaces shall be provided on each tank for the installation of a nameplate and certification plate.

O. Suitable lifting lugs shall be provided on each tank as required for handling and erection. Provisions shall be made for anchoring each completed tank to the concrete base.

P. Accessories shall be provided on each tank as indicated on the Drawings and as specified herein.

Q. Access manholes shall have an inside diameter of at least 21 inches and shall be provided on the top of each tank as indicated on the Drawings. Each manhole shall be flanged, fully gasketed, and furnished with a blind flange having the same properties as the tank construction. Flange drilling and diameter shall confirm to ANSI B16.5, 150 lb.

R. Each tank shall be provided with a nameplate to identify the material stored.

S. A stainless steel certification plate shall be installed below each storage tank nameplate. At least the following data shall be included on the certification plate:

1. Name of tank manufacturer.

2. Date of manufacture.

3. Tank Dimensions

4. Capacity in Gallons.

5. Material of construction

6. Maximum allowable concentration and temperature of the specified chemical solution that can be stored safely.

7. Maximum specific gravity of the material that can be stored.

2.02 ACCESSORIES

A. Each tank shall have the following accessories:

1. Ladders

a. Rigid ladders to be provided on each tank as shown on tank data drawings.

b. Ladders to be in accordance with OSHA 29 CFR Part 1910.27, Fixed Ladder.

c. Provide with a ladder safety device conforming to OSHA 29 CFR Part 1910.27 for ladders above six feet in height. Provide one personnel full body harness in conformance with OSHA 29 CFR Part 1926.104 and associated attachments for every two tanks provided. Ladder safety device shall be provided in addition to any cage or landing required or shown.

d. Ladder rungs to be nonskid of fiberglass on one foot centers, two foot wide.

2. Provide passive restraints to tie down tank to concrete pad.

3. Sodium Bisulfite tank shall be insulated with 2" of urethane foam.

Insulated tanks shall be furnished with an exterior pigmented protective gel coat. Color of the protective gel shall be white to reflect the rays of the sun.

4. Sodium Bisulfite tank shall be heat traced, as well as all Sodium Bisulfite fill lines and suction lines to the chemical handling building. Heat tracing must be capable of maintaining tanks and lines at 70°F.

B. Each tank shall have the following fittings:

1. One (1) two-inch (2") molded-in drain line located at the bottom of the sidewall and having flanged fittings.

2. One (1) two-inch (2") molded-in chemical feed line located at the bottom of the sidewall and having flanged fittings.

3. Site gage & Level Indicator: See Division 13 specifications.

4. One (1) SCH 80 PVC U-Vent overflow/vent (sized by tank manufacturer).

5. One (1) two-inch (2") fill line and supports entering tank through the roof and extending down three quarters (3/4) of the tank height.

6. Nuts, bolts, gaskets, mounting hardware, and all accessories are to be chemically resistant to Sodium Bisulfite.

2.03 TANK SIGNAGE:

A. National Fire Rating (NFR):

1. Provide signage for the National Fire Rating System (NFR) designation conforming to NFPA 704, for the chemicals contained in the tanks.

2. Provide two (2) signs per tank. Location to be determined in the field by the Construction Manager for proper visibility.

3. Signs to be vinyl, screen printed with UV resistant inks, and a minimum of 18 inches per side. No mechanical fasteners are allowed.

PART 3 EXECUTION

3.01 INSTALLATION

A. Install tanks in accordance with Drawings, approved submittals and the manufacturer's installation instructions.

B. Anchor tanks with stainless steel anchor bolts.

C. Use gaskets chemically resistant to sodium bisulfite to make piping connections.

D. The concrete bases for the tanks shall be constructed in accordance with the provisions of the concrete section and shall be level and smooth to the tolerances permitted by the tank manufacturer. The tanks shall be installed in accordance with the manufacturer's recommendations and to the satisfaction of the Owner and made ready for the installation of piping and other appurtenances as indicated on the Drawings and specified under other Sections. Grouting under the tank, if recommended by the manufacturer, shall be done with nonshrinking grout as specified in the grouting section.

E. Coat the concrete containment basin with the following system as manufactured by Tnemec Company, Inc. (or approved equal). Application and surface preparation shall conform to manufacturer's recommended procedures:

1. Surface preparation: Acid etch to a CSP 1 standard. High pressure wash minimum 3,500 psi with oscillating tip to remove contaminants. All acid must be removed prior to coating the substrate and must be clean dry and free of all contaminants.

2. Concrete primer: Series 201 Epoxoprime (One (1) coat at 6-8 mils dry thickness).

3. Top coat: Series 282 Tneme-glaze CR (Two (2) coats at 6-8 mils dry thickness each)

F. After completion of installation, the tanks shall be filled with water to the overflow elevation and allowed to stand full for a period of not less than 48 hours.

1. During testing, connections may be plugged by the installation of temporary plugs on the outside of the tank but shall not be blocked or plugged on the inside.

2. All leaks or indications of leaks shall be repaired by the Contractor and made completely watertight.

3. A leaking tank, upon repair, shall be retested to the satisfaction of the Owner.

G. When installation has been completed and all connections have been made, all tank surfaces, interior and exterior, shall be thoroughly cleaned as recommended by the manufacturer and to the satisfaction of the Engineer. Abrasive cleaning agents shall not be used.

3.02 STARTUP AND ACCEPTANCE

A. Start-Up. Beneficial use will not occur until after the start-up activities have been performed and accepted by the City Engineer. Start-up activities include the following:

1. Receipt and acceptance by the City Engineer of draft Operation and Maintenance manuals, including the wiring and ladder diagrams.

2. Installation inspection by City operating, electrical and instrumentation staff followed by any corrective measures required by the Contractor.

3. Satisfactory operation of Chemical Storage Tanks for 7 consecutive days under the City's control. If malfunctions or other operational problems halt the 7-day test period, the Contractor shall make appropriate corrections and restart the 7-day test period.

4. Provide the services of a factory-trained technician for a period of 8 hours to train the City's operating and maintenance personnel. Training session shall be scheduled and coordinated by the Contractor. Furnish the representative for the additional time to correct or supervise correction of any defects of malfunctions.

B. Acceptance. After the start-up operation has been successfully completed, the City will accept the Chemical Storage Tanks when final Operation and Maintenance manuals have been received, reviewed, and accepted by the City. Include ladder logic diagrams and wiring and termination diagrams for both power and instrumentation systems.

END OF SECTION

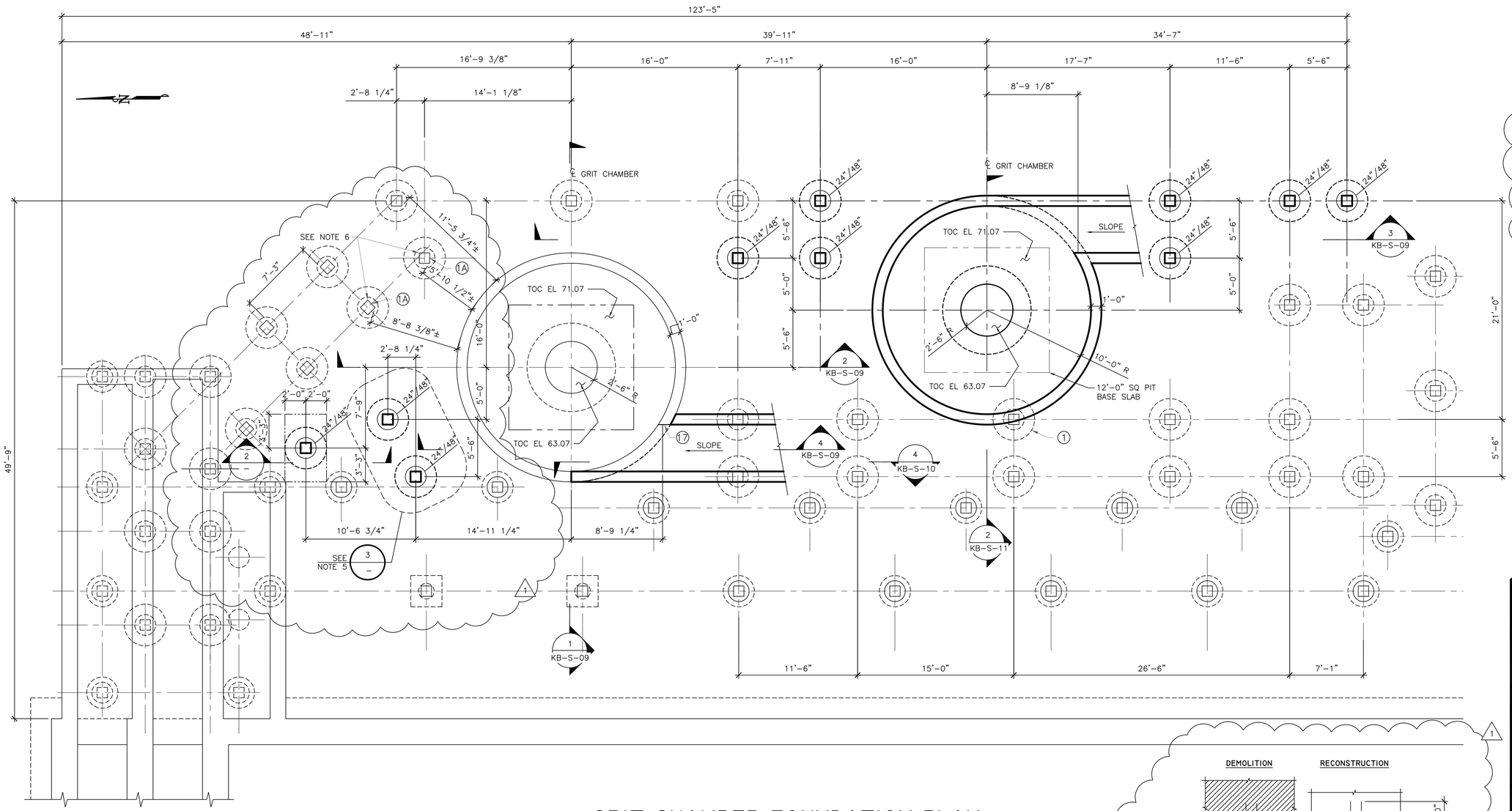

NOTES:

1. FOR GENERAL NOTES, ABBREVIATIONS, AND SYMBOLS, SEE DWG KB-S-01.
2. FOR STRUCTURAL TYPICAL SECTIONS AND DETAILS, SEE DWGS KB-S-13 AND KB-S-14.
3. FOR DEMOLITION WORK, SEE DWGS KB-S-05, KB-S-06, KB-S-07, AND KB-S-12.
4. FOR DEMOLITION KEY NOTES CORRESPONDING TO CIRCLED NUMBERS, SEE DWG KB-S-05.
5. ALTERNATE FOUNDATION DETAIL 3 MAY BE USED IN LIEU OF PLAN 1 TO CONSTRUCT NEW FOUNDATIONS FOR GRIT CHAMBER EFFLUENT CHANNEL IF DRILLED PIER NEAR BY-PASS CHANNEL CANNOT BE CONSTRUCTED AS SHOWN IN PLAN 1 WITH CONTRACTOR'S PIER DRILLING EQUIPMENT DUE TO INTERFERENCE WITH EXISTING BY-PASS CHANNEL.
6. EXISTING COLUMNS MAY BE DEMOLISHED DOWN TO GRADE LEVEL AND THEN BE RECONSTRUCTED AFTERWARDS PER DETAIL 5/KB-S-07 IF REQUIRED BY CONTRACTOR TO GAIN ACCESS WITH DRILLING RIG TO DRILL NEW DRILLED PIER FOUNDATIONS FOR NEW GRIT CHAMBER EFFLUENT CHANNEL.

DEMOLITION KEY NOTES:

(1) REMOVE EXISTING CONCRETE COLUMN IN ITS ENTIRETY AND EXISTING CONCRETE PIER TO 12" BELOW EXISTING GRADE.

(1A) OPTIONAL DEMOLITION (SEE NOTE 6 ABOVE): DEMO EXISTING CONCRETE COLUMN DOWN TO TOP OF EXISTING DRILLED PIER. AVOID DAMAGING BOTTOM 24" OF EXISTING REBAR AS SHOWN TO PROVIDE SPLICE LENGTH OF EXISTING VERTICAL REBAR WITH NEW REBAR.

GRIT CHAMBER FOUNDATION PLAN (1)

SCALE: 3/16" = 1'-0"

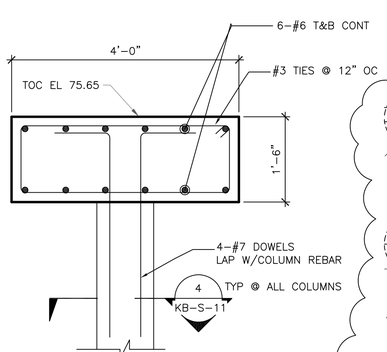

SECTION (2)

SCALE: 3/4" = 1'-0"

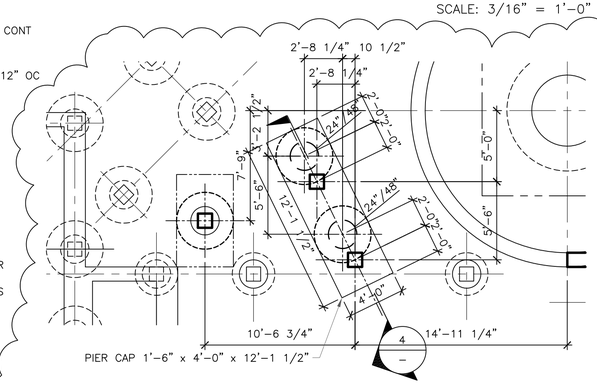

ALTERNATE FOUNDATION DETAIL (3)

SCALE: 3/16" = 1'-0"

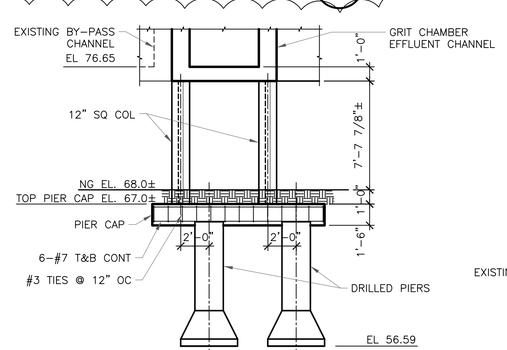

SECTION (4)

SCALE: 3/16" = 1'-0"

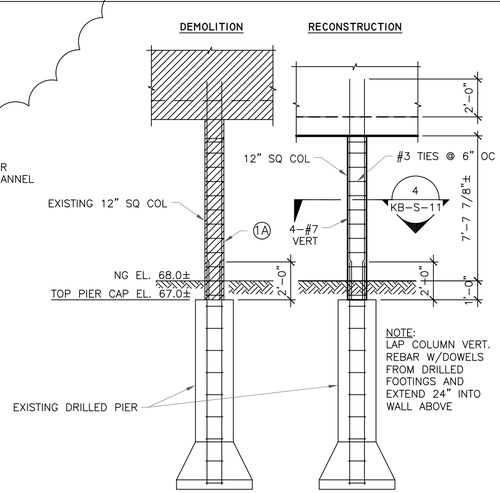

OPTIONAL SECTION (5)

SCALE: 1/4" = 1'-0" (SEE NOTE 6)

KB-S-07

1 09/29/2015 ADDENDUM NO. 2

Infrastructure Associates
INFRASTRUCTURE ASSOCIATES, INC.
6117 Richmond Avenue, Suite 200
Houston, Texas 77057-6256
Tel. 713.622.0120 Fax. 713.622.0557
TBPE Registration No. F-4506

STATE OF TEXAS
GEORGE T. WOZNY
112553
LICENSED PROFESSIONAL ENGINEER
9/29/2015

SURVEYED BY: WGC, Inc.
F.B. No.: P-5861

CITY OF HOUSTON
DEPARTMENT OF PUBLIC WORKS AND ENGINEERING

KEEGANS BAYOU & GREENRIDGE WWTP PLANT IMPROVEMENTS

KEEGANS BAYOU WWTP GRIT REMOVAL SYSTEM FOUNDATION PLAN

WBS NUMBER	
R-000265-0079-4	
DRAWING SCALE	
AS SHOWN	
CITY OF HOUSTON PM	
GAUHER KHAN, P.E.	
SHEET No. 20 OF 126	

Oct 06, 2015 5:31AM Gwynn
E:\AI\Projects\CONWTP\Dwgs\KB-S-07.dwg
pmodule: Kwik\b - TBLOCK.dwg\b, KB-S-07.dwg
TBLOCK.dwg

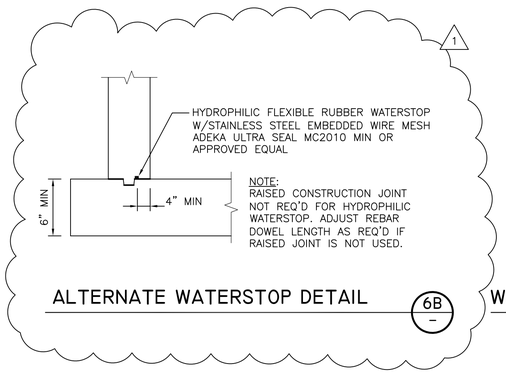

ALTERNATE WATERSTOP DETAIL 6B

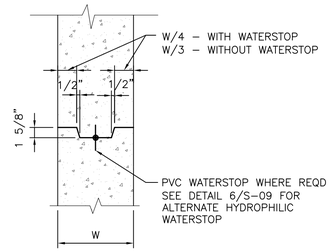

WALL HORIZONTAL CONSTRUCTION JOINT 12

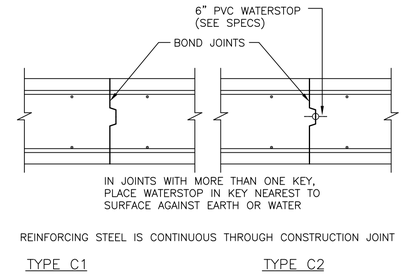

CONSTRUCTION JOINTS 8

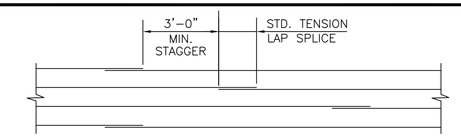

SPLICE LAYOUT FOR HOOP BARS (CIRCULAR STRUCTURES) 4

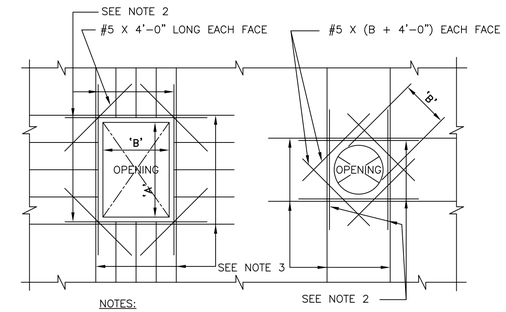

NOTES:

1. PROVIDE 2–#6 x (B+4'–0") ADDITIONAL REBARS @ TOP AND BOTTOM AND 2–#6 x (A+4'–0") ADDITIONAL REBARS AT EACH SIDE OF OPENING IN WALLS ONLY.
2. PROVIDE ADDL BARS EQUAL TO ONE–HALF OF BARS INTERRUPTED AT EACH SIDE OF OPENING AT 3" C/C. THESE BARS SHALL BE ORIGINAL SIZES AND LENGTHS AS THOSE OF THE INTERRUPTED BARS. (TYPICAL FOR OPENINGS IN SLABS AND PRESSURE WALLS.)

ADDITIONAL REINFORCING STEEL AT OPENINGS IN WALLS AND SLABS 3

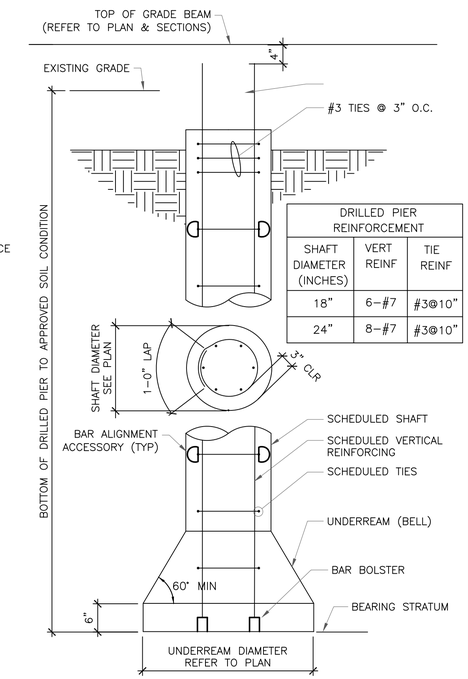

DRILLED PIER REINFORCEMENT		
SHAFT DIAMETER (INCHES)	VERT REINF	TIE REINF
18"	6–#7	#3@10"
24"	8–#7	#3@10"

TYP DRILLED PIER DETAIL 2

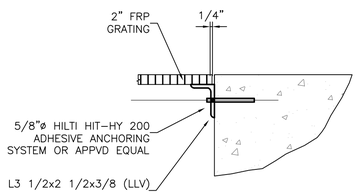

TYPICAL GRATING SUPPORT AT EXISTING STRUCTURE DETAIL 13

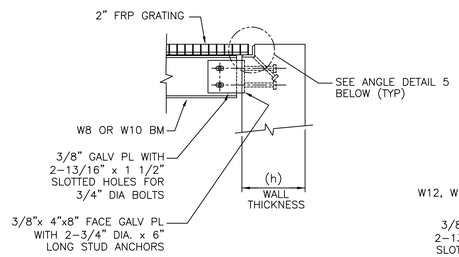

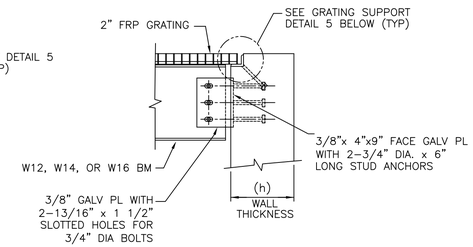

TYPICAL GRATING SUPPORT BEAM TO CONCRETE WALL CONNECTION DETAIL 7

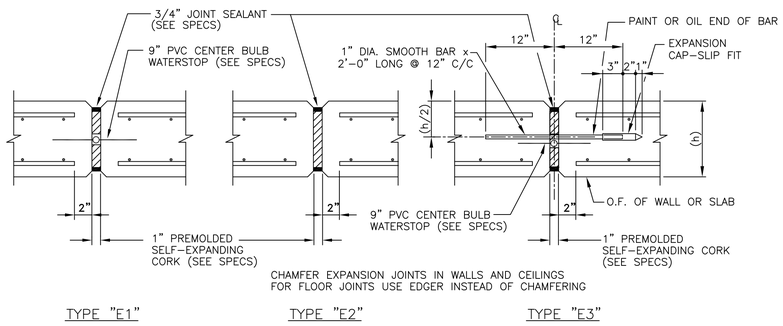

EXPANSION JOINTS 11

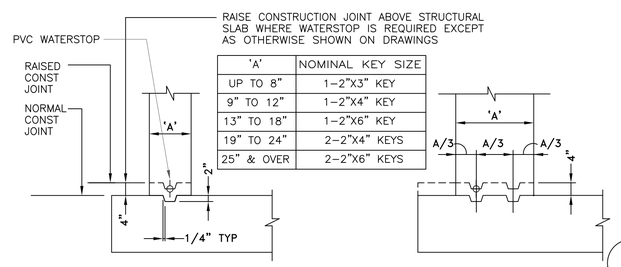

'A'	NOMINAL KEY SIZE
UP TO 8"	1–2"X3" KEY
9" TO 12"	1–2"X4" KEY
13" TO 18"	1–2"X6" KEY
19" TO 24"	2–2"X4" KEYS
25" & OVER	2–2"X6" KEYS

CONSTRUCTION JOINT KEY DETAILS 6A

NOTES:

1. FOR GENERAL NOTES, SYMBOLS, AND ABBREVIATIONS, SEE DWG GR–S–01.
2. DETAILS SHOWN ON THIS DRAWING ARE TYPICAL DETAILS AND SHALL BE USED WHOLLY OR IN PART WHERE THEY APPLY EXCEPT WHERE MODIFIED BY DETAILED DRAWINGS & SPECIFICATIONS.

NOTES:

1. GALVANIZE STRUCTURAL STEEL MEMBERS.
2. MINIMIZE STEEL WELDING.
3. TOUCH UP WELD AFFECTED AREAS WITH ZINC RICH PAINT.
4. STRUCTURAL STEEL SHALL CONFORM TO ASTM A36.

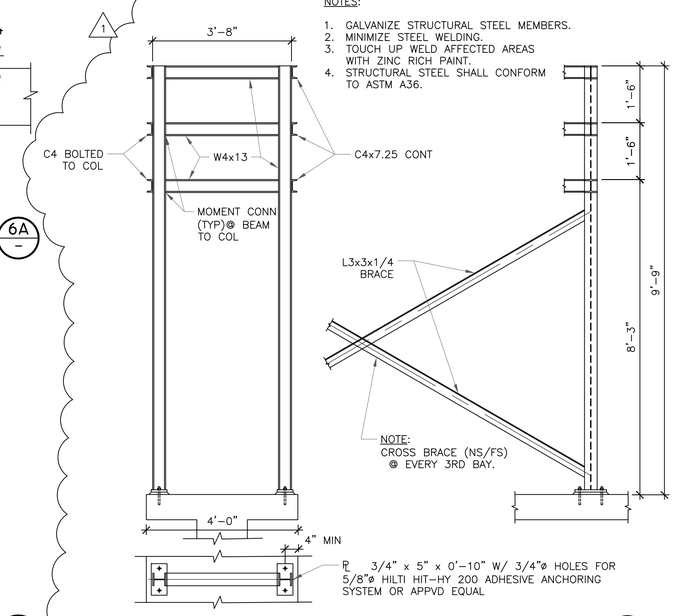

TYP ELECTRICAL CONDUIT SUPPORT RACK 1

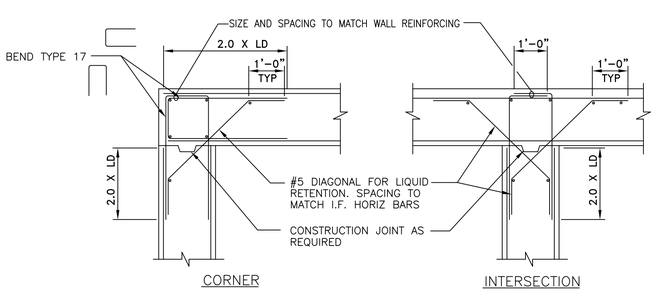

TYPICAL DETAILS OF WALL REINFORCEMENT 10

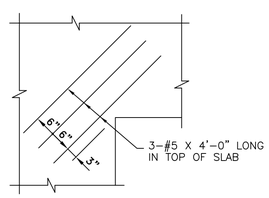

SPECIAL REINFORCEMENT TO BE PLACED AT ALL INSIDE CORNERS IN SLABS OR WALKWAYS

SLAB DETAIL AT RE - ENTRANT CORNER 9

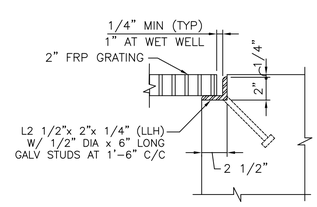

TYP GRATING SUPPORT DETAIL 5

1 09/29/2015 ADDENDUM NO. 2

Infrastructure Associates
INFRASTRUCTURE ASSOCIATES, INC.
6117 Richmond Avenue, Suite 200
Houston, Texas 77057–6256
Tel. 713.622.0120 Fax. 713.622.0557
TBPE Registration No. F–4506

STATE OF TEXAS
GEORGE T. WOZNY
112553
LICENSED PROFESSIONAL ENGINEER
9/29/2015

SURVEYED BY: WGC, Inc.
K.B. No.: P–5861

CITY OF HOUSTON
DEPARTMENT OF PUBLIC WORKS AND ENGINEERING

KEEGANS BAYOU & GREENRIDGE WWTP PLANT IMPROVEMENTS

STRUCTURAL TYPICAL SECTIONS AND DETAILS SHEET 1 OF 2

WBS NUMBER	R–000265–0079–4
DRAWING SCALE	NOT TO SCALE
CITY OF HOUSTON PM	GAUHER KHAN, P.E.
SHEET No. 78 OF 126	

GR–S–09

Oct 06 2015 1:54AM George
E:\AA\Projects\CIHMPW\Dwgs\GR–S–09 Structural Details Sheet 1 of 2.dwg
xrefs: Xref(s): TITLEBLOCK–06–rev, Details.dwg, TBLOCK.dwg
TBLOCK.dwg

No.	Date	Revisions	App'd.
1	10/02/15	ADDENDUM NO. 2	KAO

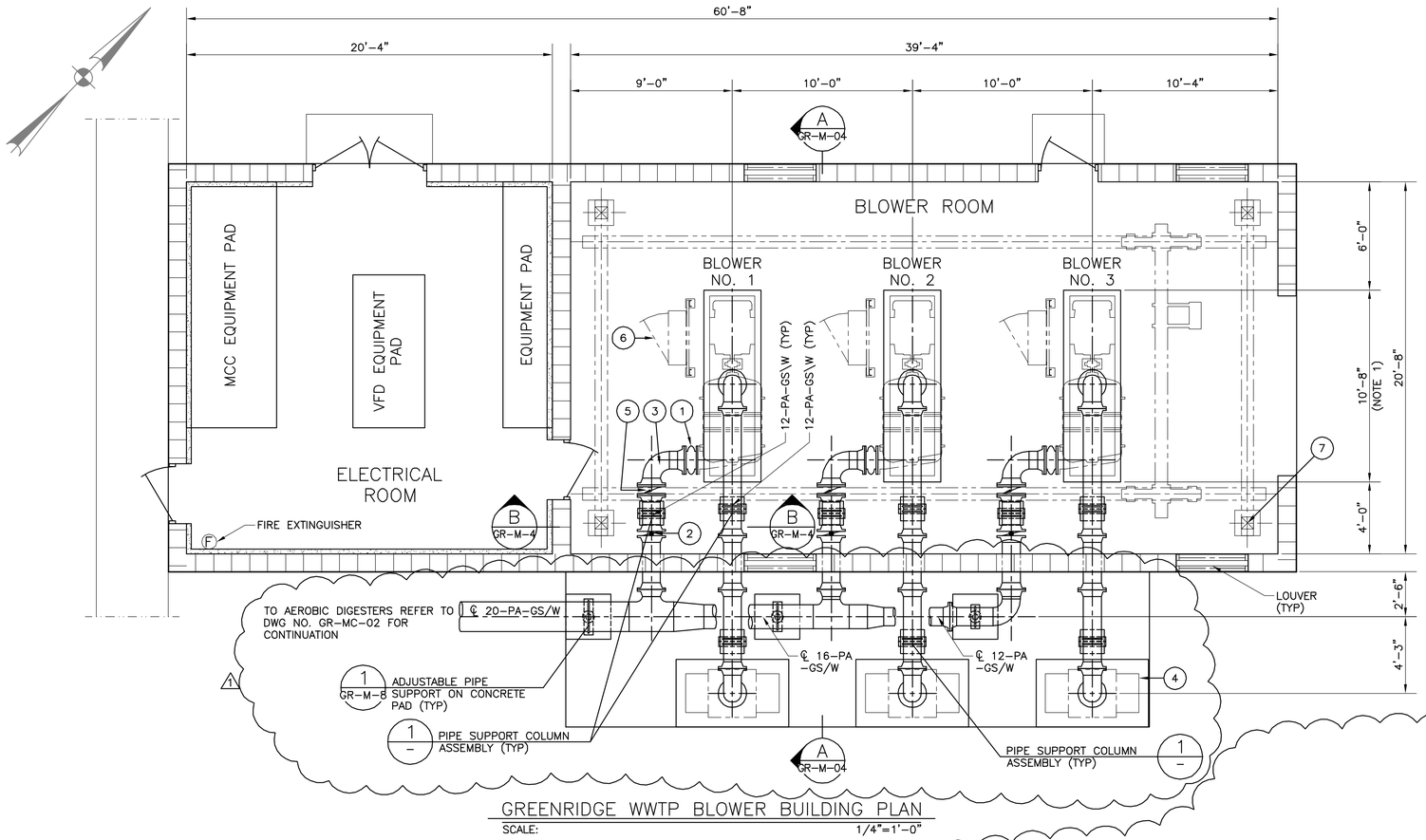

GREENRIDGE WWTP BLOWER BUILDING PLAN

SCALE: 1/4"=1'-0"

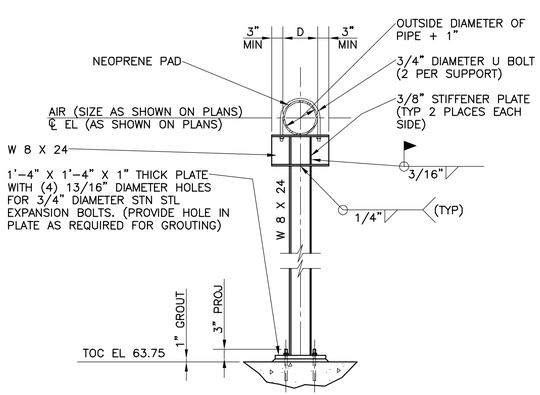

PIPE SUPPORT COLUMN ASSEMBLY 1/–

NTS

NOTES:

1. COORDINATE ALL DIMENSIONS WITH MANUFACTURER'S APPROVED SHOP DRAWINGS.
2. LOCATION OF BRIDGE CRANE SUPPORTS SHALL BE COORDINATED WITH CRANE MANUFACTURER'S APPROVED SHOP DRAWINGS. CONTRACTOR SHALL VERIFY NO CONFLICTS EXIST WITH OTHER BUILDING FEATURES.
3. PROVIDE AND INSTALL ALL AIR PIPING (PA) IN ACCORDANCE WITH SPECIFICATION SECTION 15310 – AERATION PIPING, VALVES AND FITTINGS.

ACCESSORY SCHEDULE	
ITEM	DESCRIPTION
1	12" EXPANSION JOINT
2	12" BUTTERFLY VALVE
3	12" 90° ELBOW
4	12" AIR INTAKE FILTER SILENCER WITH REMOVABLE WEATHERHOODS
5	12" CHECK VALVE
6	BLOWER CONTROL PANEL
7	3 TON BRIDGE CRANE (NOTE 2)

Infrastructure Associates
INFRASTRUCTURE ASSOCIATES, INC.
6117 Richmond Avenue, Suite 200
Houston, Texas 77057–6256
Tel. 713.622.0120 Fax. 713.622.0557
TBPE Registration No. F–4506

AECOM
AECOM TECHNICAL SERVICES, INC.
5444 WESTHEIMER ROAD, SUITE 200
HOUSTON, TEXAS 77056
WWW.AECOM.COM
TBPE REG. NO. F–3580

SURVEYED BY: WGC
F.B. No.: P–5861

STATE OF TEXAS
KEITH ALLEN O'CONNOR
98334
LICENSED PROFESSIONAL ENGINEER
06/25/2015

CITY OF HOUSTON
DEPARTMENT OF PUBLIC WORKS AND ENGINEERING

KEEGANS BAYOU & GREENRIDGE WWTP PLANT IMPROVEMENTS
GREENRIDGE WWTP
BLOWER BUILDING PLAN

WBS NUMBER
R–000265–0079–4
DRAWING SCALE
AS SHOWN
CITY OF HOUSTON PM
GAUHER KHAN, P.E.
SHEET No. 86 OF 126

GR–M–03

ADDENDUM NO. 2

Oct 02 2015 2:21PM gomezl
P:_PWD\City of Houston\60239581 – MC-TC-KB-GR WWTP Imp\400 Technical Information and technical Disciplines\423 CADD\9581Design\9581Greenridge\9581GreenDWG\ADD1 9581GR– M3 4BLW.dwg

No.	Date	Revisions	App'd.
1	10/02/15	ADDENDUM NO. 2	KAO

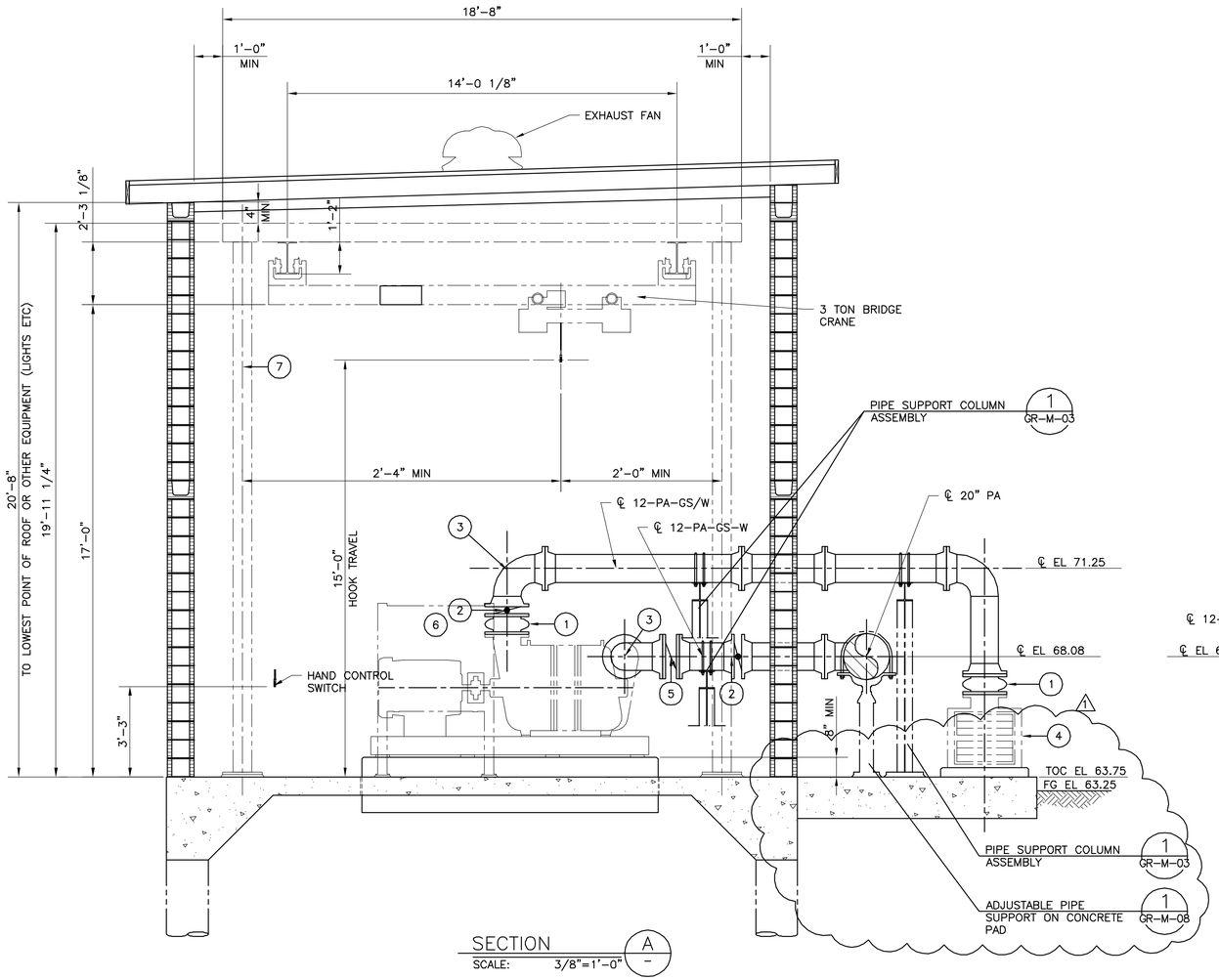

SECTION A
SCALE: 3/8"=1'-0"

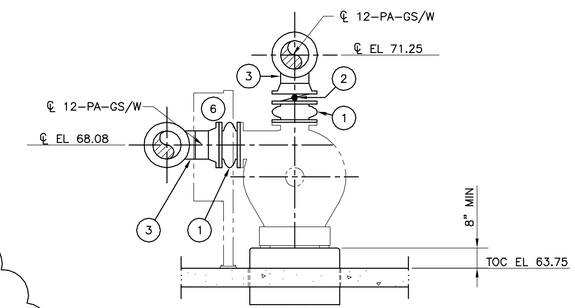

SECTION B
SCALE: 3/8"=1'-0"

ACCESSORY SCHEDULE	
ITEM	DESCRIPTION
1	12" EXPANSION JOINT
2	12" BUTTERFLY VALVE
3	12" 90° ELBOW
4	12" AIR INTAKE FILTER SILENCER WITH REMOVABLE WEATHERHOODS
5	12" CHECK VALVE
6	BLOWER CONTROL PANEL
7	3 TON BRIDGE CRANE (NOTE 2)

Infrastructure Associates
INFRASTRUCTURE ASSOCIATES, INC.
6117 Richmond Avenue, Suite 200
Houston, Texas 77057-6256
Tel. 713.622.0120 Fax. 713.622.0557
TBPE Registration No. F-4506

AECOM
AECOM TECHNICAL SERVICES, INC.
5444 WESTHEIMER ROAD, SUITE 200
HOUSTON, TEXAS 77056
WWW.AECOM.COM
TBPE REG. NO. F-3580

STATE OF TEXAS
KEITH ALLEN O'CONNOR
98334
LICENSED PROFESSIONAL ENGINEER
06/25/2015

SURVEYED BY: WCC
F.B. No.: P-5861

CITY OF HOUSTON
DEPARTMENT OF PUBLIC WORKS AND ENGINEERING

KEEGANS BAYOU & GREENRIDGE WWTP PLANT IMPROVEMENTS
GREENRIDGE WWTP
BLOWER BUILDING SECTIONS

WBS NUMBER	
R-000265-0079-4	
DRAWING SCALE	
AS SHOWN	
CITY OF HOUSTON PM	
GAUHER KHAN, P.E.	
SHEET No. 87 OF 126	

Oct 02 2015 2:21PM gomezj1
P:_PWO\City of Houston\60239581 - MC-TC-KB-GR WWTP Imp\400 Technical Information and technical Disciplines\423 CADD\95810esign\95810reenridge\95810reenridgeDWG\A0D1 95810R- M3 48LW.dwg
A0D1 95810R- M3 48LW.dwg

No.	Date	Revisions	App'd.
1	7 OCT 15	ADDENDA NO.2	

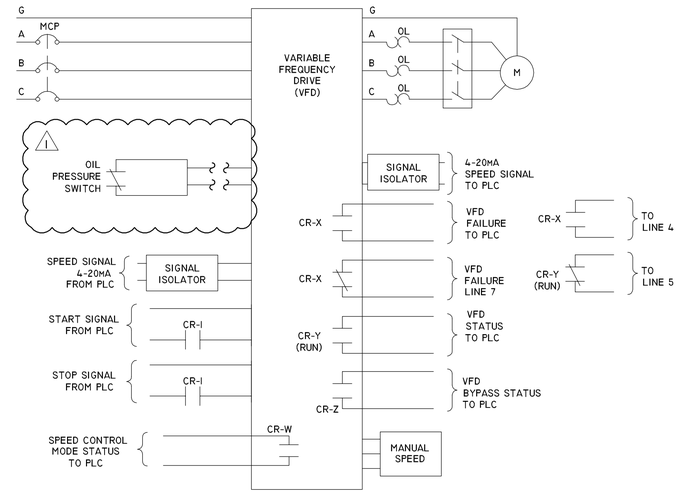

2 BLOWER MOTOR STARTER SCHEMATIC
SCALE: NONE

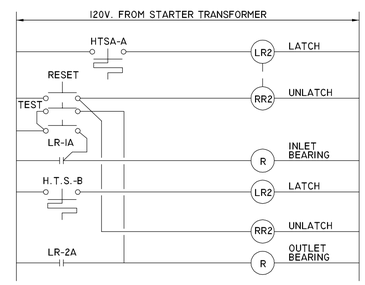

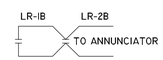

3 AERATOR CONTROL SCHEMATIC
SCALE: NTS

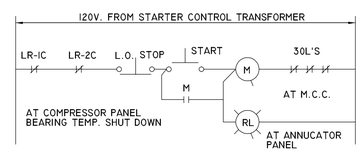

1 BLOWER MOTOR STARTER CONTROL
SCALE: NONE

NOTE: SWITCHES ON BLOWER PANEL.
MAIN CONTRACTOR COIL TO BE D.C.

Infrastructure Associates
INFRASTRUCTURE ASSOCIATES, INC.
6117 Richmond Avenue, Suite 200
Houston, Texas 77057-6256
Tel. 713.622.0120 Fax. 713.622.0557
TBPE Registration No. F-4506

STATE OF TEXAS
RAHIM TAZEHZADEH
88923
LICENSED
PROFESSIONAL ENGINEER
10/5/15

SURVEYED BY: WGC, Inc.
F.B. No.: P-5861

CITY OF HOUSTON
DEPARTMENT OF PUBLIC WORKS AND ENGINEERING

WEST WAY
WWTP PLANT IMPROVEMENTS

GREENRIDGE WWTP
AERATOR AND BLOWER
P&ID

WBS NUMBER
R-000265-0079-4
DRAWING SCALE
NONE
CITY OF HOUSTON PM
GAUHER KHAN, P.E.
SHEET No. 113 OF 126

GR-E-13

Oct 07 2015 6:29PM admin
K:\MEP\COHWWTP\Greenridge\- Electrical -\GRE-13 - Aerator and Blower P&ID.dwg

GRE-13 - Aerator and Blower P&ID.dwg