Document 00911

NOTICE OF
ADDENDUM NO. 3

Date of Addendum: 04-22-15

PROJECT NAME: Bringhurst Pedestrian Bridge Over UPRR

PROJECT NO: WBS No. N-000420-0045-4

BID DATE: April 23, 2015 (There is no change to the Bid Date.)

FROM: Ravi Kaleyatodi, P.E., CPM, Senior Assistant Director
City of Houston, Department of Public Works and Engineering
611 Walker Street
Houston, Texas 77002
Attn: Ben Bansal, P.E., Project Manager

STATE OF TEXAS
EPIFANIO E. SALAZAR JR.
67749
REGISTERED PROFESSIONAL ENGINEER
04-21-2015

SES HORIZON CONSULTING ENGINEERS, INC.
TEXAS REGISTERED ENGINEERING FIRM F-003922

TO: Prospective Bidders

CHANGE IN BID DATE

The time of day and place for submittal of bid remains the same

The referenced Addendum forms a part of the Bidding Documents and will be incorporated into the Contract documents, as applicable.

Written questions regarding this Addendum may be submitted to the Project Manager following the procedures specified in Document 00200 – Instructions to Bidders. Immediately notify the City Engineer through the named Project Manager upon finding discrepancies or omissions in the Bid Documents.

This Addendum includes:

ADDENDUM SYNOPSIS

Clarifications
Plan Sheet 33 Of 122

for

Ravi Kaleyatodi,, P.E., CPM
Senior Assistant Director
Department of Public Work
And Engineering

DATED: 04-22-15

END OF DOCUMENT

Document 00910

ADDENDUM NO. 3

Date of Addendum: 04-22-15

PROJECT NAME: Bringhurst Pedestrian Bridge Over UPRR

PROJECT NO: WBS No. N-000420-0045-4

BID DATE: April 23, 2015 (There is no change to the Bid Date.)

FROM: J. Timothy Lincoln, P.E., City Engineer
City of Houston, Department of Public Works and Engineering
611 Walker Street
Houston, Texas 77002
Attn: Ben Bansal, P.E., Project Manager

TO: Prospective Bidders

This Addendum forms a part of the Bidding Documents and will be incorporated into the Contract documents, as applicable. Insofar as the original Project Manual and Drawings are inconsistent, this Addendum governs.

This Addendum uses the change page method: remove and replace or add pages, or Drawing sheets, as directed in the change instructions below. Change bars (|) are provided in the outside margins of pages from the Project Manual to indicate where changes have been made; no change bars are provided in added Sections. Reissued Drawing Sheets show the Addendum number below the title block and changes in the Drawing are noted by a revision mark and enclosed in a revision cloud.

STATE OF TEXAS
EPIFANIO E. SALAZAR JR.
67749
REGISTERED PROFESSIONAL ENGINEER

04-21-2015

SES HORIZON CONSULTING ENGINEERS, INC.
TEXAS REGISTERED ENGINEERING FIRM F-003922

ADDENDUM NO. 3

CLARIFICATIONS

PLAN SHEET 33 OF 122

1. Refer to attached Document 00220 dated 04-21-2015 from Forde Construction Co..
2. Refer to attached Plan Sheet 33 of 122 with response to item 1. above, from SES Horizon Consulting Engineers, Inc. (SES).

END OF ADDENDUM NO. 3

DATED: _____

Ravi Kaleyatodi, P.E., CPM
Senior Assistant Director
Department of Public Works and Engineering

RK:MS:BB:sdd

END OF DOCUMENT

Document 00220

REQUEST FOR BID INFORMATION

PROJECT: Bringhurst Pedestrian Bridge Over UPRR

PROJECT No.: WBS No. N-000420-0045-4

TO: Ben Bansal, P.E.
611 Walker, 14th Floor
Houston, Texas 77002

Phone No. (832) 395-2207
Fax No. (832) 395-2252
Email Addr. ben.bansal@houstontx.gov

(Type or Print question legibly; use back if more space is needed)

SHEET 33 SECTION B WHAT IS ANCHOR BOLT SPACING

SECTION A WHAT IS 1" DIA. ROD SPACING

This request relates to 33 / A & B and/or _____
Drawing / Detail No. Specification Section No.

Attachments to this request: _____

Signature: Don Manar

Date: 4-21-15

(Type or Print Name) DON MANAR

(Type or Print Company Name) FORDE CONSTRUCTION CO.

END OF DOCUMENT

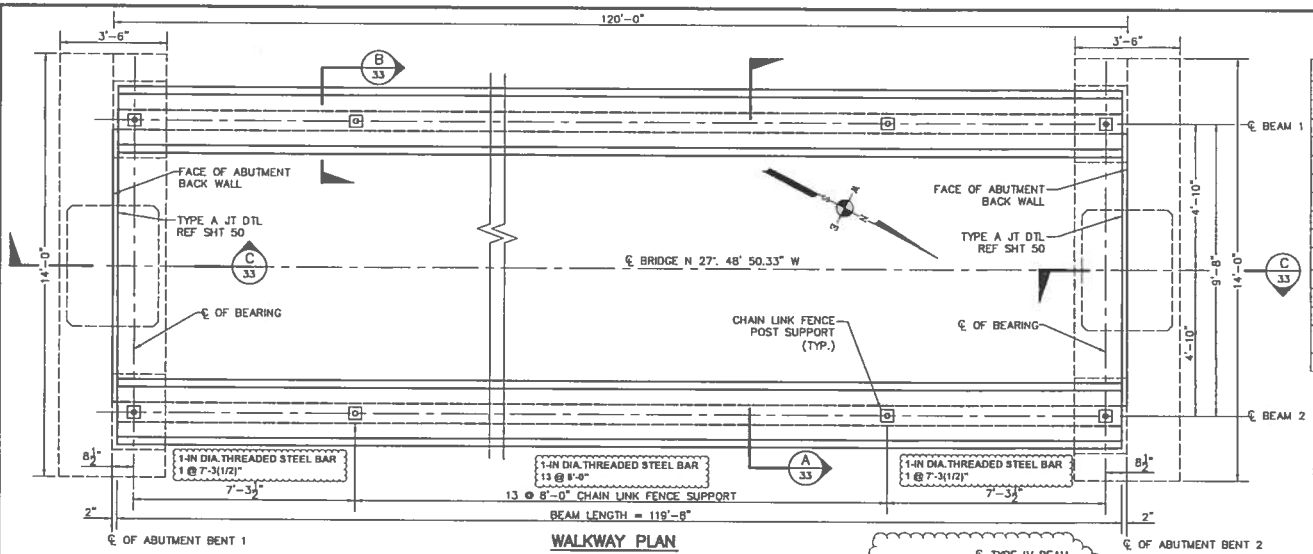

WALKWAY PLAN

N.T.S.

TABLE OF ESTIMATED QUANTITIES SPAN 1				
BAR	No	SIZE	LENGTH	WEIGHT
A	120	#4	8'-4"	670
B	120	#5	8'-4"	1,043
T	20	#4	123'-4"	1,648
REINFORCING STEEL			LB	3,361

TOTAL ESTIMATED QUANTITIES		
ITEM	UNIT	QUANTITY
REINFORCING STEEL	LB	3,361
PRESTRESS BEAMS TYPE IV	LF	239.33
CLASS S CONC SLAB	CY	35.5
SP CHAIN LINK FENCE	LF	119.7

* REINFORCING STEEL SHOWN FOR CONTRACTOR INFORMATION ONLY

ABUTMENT NO. 1 (N 62 11 09.67 E)

DISTANCE BETWEEN STATION LINE AND BEAM 1 4.8883 L

SPAN 1	CL BENT	D M S
BEAM 1	0.000	90 00 00
BEAM 2	9.667	90 00 00

ABUTMENT NO. 2 (N 62 11 09.67 E)

DISTANCE BETWEEN STATION LINE AND BEAM 1 4.8883 L

SPAN 1	CL BENT	D M S
BEAM 1	0.000	90 00 00
BEAM 2	9.667	90 00 00

BEAM REPORT

BEAM REPORT, SPAN 1

	HORIZONTAL DISTANCE C-C BENT	TRUE DISTANCE C-C BRG.	BOT. BM.	FLG.
BEAM 1	120.000	118.333	119.667	0.000
BEAM 1	120.000	118.333	119.667	0.000

GENERAL NOTES:

1. DESIGNED IN ACCORDANCE WITH CURRENT A.A.S.H.T.O. SPECIFICATIONS.
2. OMITTED.
3. MINIMUM COMPRESSIVE STRENGTH FOR CAST IN PLACE CONCRETE SHALL BE CLASS S, DESIGN F'c. = 4000 PSI.
4. REINFORCING STEEL SHALL BE: A-615 GRADE 60.
5. INITIAL PRETENSION FOR 1/2 INCH, 270 K.S.I. STRANDS IS EQUAL TO 28.9 K.I.P.S.
6. CHAMFER ALL EXPOSED CORNERS 3/4" UNLESS OTHERWISE NOTED.
7. LOCATION OF HOLES FOR THE 1"Ø THREADED STEEL BAR OR ROD, STRUCTURAL CONCRETE INSERT, AND POST ANCHOR LOCATION SHALL BE GIVEN TO THE PRESTRESSED BEAM SUPPLIER.
8. LENGTH OF PRESTRESSED BEAMS SHALL BE VERIFIED IN THE FIELD BY THE CONTRACTOR AND APPROVED BY THE ENGINEER BEFORE PROCUREMENT OF THE BEAMS.
9. SURFACE FINISH FOR WALKWAY CONCRETE SLAB SHALL BE GRADE 1, CLASS S.
10. STRUCTURAL CONCRETE INSERT AND POST ANCHOR WILL NOT BE PAID FOR BUT WILL BE CONSIDERED INCIDENTAL TO ITEM PRESTRESSED CONC. BEAM TYPE IV.
11. FOR PRESTRESSED CONCRETE BEAM DETAILS SEE STANDARD DRAWING NO. 32.
12. BARS "R" WON'T BE EXPOSED. SEE STANDARD DRAWING NO. 32.
13. REFERENCE SHEET 48 FIR STANDARD CHAINLINK FENCE DETAILS. WORK THIS DRAWING AND STANDARD DETAILS TO DEVELOP FENCE ENCLOSURE.

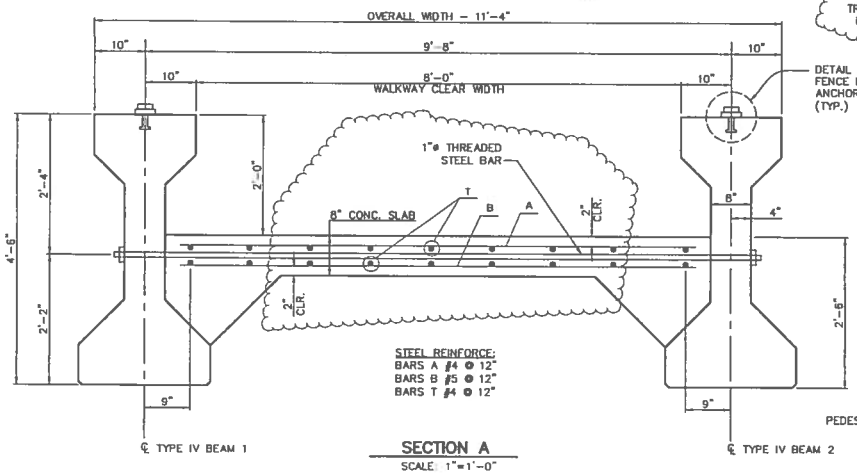

STEEL REINFORCE:
BARS A #4 @ 12"
BARS B #5 @ 12"
BARS T #4 @ 12"

SECTION A

SCALE: 1"=1'-0"

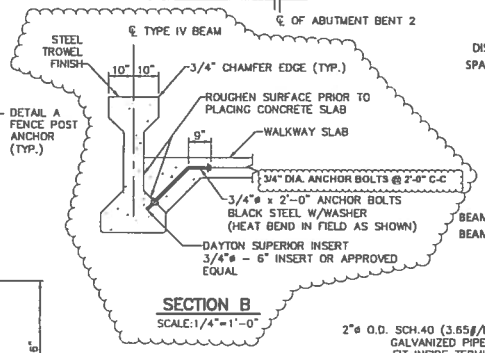

SECTION B

SCALE: 1/4"=1'-0"

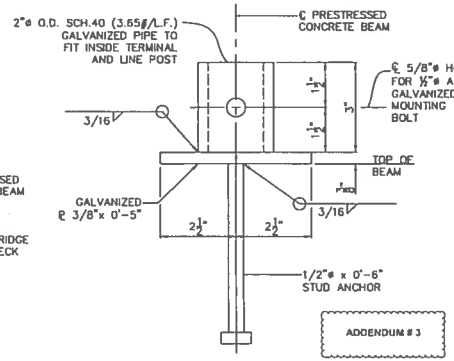

DETAIL A

FENCE POST ANCHOR DETAIL (32 REQ'D)

(FOR CHAIN LINK FENCE ENCLOSURE)

SCALE: 6"=1'-0"

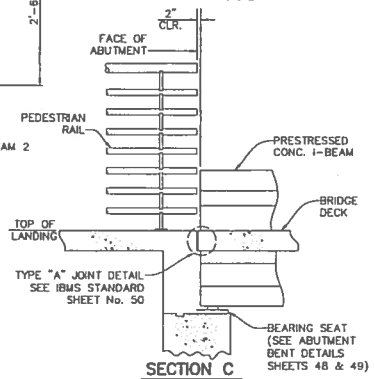

SECTION C

SCALE: 1/4"=1'-0"

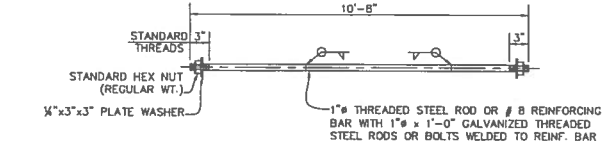

1" DIA. THREADED STEEL ROD OR BAR

N.T.S.

FED. RD. DIV. NO.	STATE	PROJECT NO.			HIGHWAY NO.
6	TEXAS	HSR 2012 (195)			VA
DISTRICT	COUNTY	CONTROL NO.	SECTION NO.	JOB NO.	SHEET NO.
HOUSTON	HARRIS	0912	72	289	33
No.	Date	Revisions			App.

SES HORIZON CONSULTING ENGINEERS, INC.
10001 Southwest Freeway, Suite 400 Houston, Texas 77074
(713) 988-5306, Fax (713) 988-5441 www.sesHorizon.com
Texas Board of Engineers Registered Firm F-9522

CSF
CIVIL, STRUCTURAL & PROCESS
Engineering Solutions
SURVEYED BY:
JAG ENGINEERING, INC.
FIL NO. P-5712

STATE OF TEXAS
CARLOS A. GUTIERREZ
68320
LICENSED PROFESSIONAL ENGINEER
3/22/2015

Texas Department of Transportation
©2015

CITY OF HOUSTON
DEPARTMENT OF PUBLIC WORKS AND ENGINEERING

BRINGHURST PEDESTRIAN BRIDGE OVER UPRR

PRESTRESSED CONCRETE BEAMS LAYOUT AND SLAB DETAILS

WBS NO. 1N-000420-0045-4	CITY DWG NO.
TXDOT CSJ No. 0912-72-289	
DRAWING SCALE	
AS NOTED	
CITY OF HOUSTON PM	
BEN BANSAL, P.E.	
SHEET NO. 33 OF 122	

CITY OF HOUSTON
53808
CITY DRAWING NUMBER

FOR REDUCED PLANS original scale in inches

PLOTTED ON: Monday, March 02, 2015 9:52:53 AM
FILE NAME: F:\UPRR-PBRIDGE\CAD\050C\UPRR-BEAM DETAILS.DWG