CITY OF HOUSTON
DEPARTMENT OF PUBLIC WORKS AND ENGINEERING
ENGINEERING AND CONSTRUCTION DIVISION

PROJECT MANUAL

RAMPART STREET (SUB-PROJECT 2) DRAINAGE AND PAVING

WBS No. M-000265-0002-4

VOLUME 1 of 1

Divisions 00 through 16

September 1, 2015

Klotz Associates, Inc.
1160 Dairy Ashford Road, #500
Houston, Texas 77079
281-589-7257
Texas P.E. Firm Registration No. F-929

Document 00010

TABLE OF CONTENTS

NOTE: Bold capitalized Specification Sections are included in the City of Houston Department of Public Works and Engineering Standard Construction Specifications for Wastewater Collection Systems, Water Lines, Storm Drainage, Street Paving, and Traffic located here: **http://documents.publicworks.houstontx.gov/document-center/cat_view/88-engineering-and-construction/92-specifications/208-division-02-16-standard-specifications.html**; and are incorporated in Project Manuals by reference as if copied verbatim. Documents listed "for filing" are to be provided by Bidder and are not included in this Project Manual unless indicated for example only. The Document numbers and titles hold places for actual documents to be submitted by Contractor during Bid, post-bid, or construction phase of the Project. Specification Sections marked with an asterisk (*) are amended by a supplemental specification, printed on blue paper and placed in front of the Specification it amends. Documents in the 200, 300 and 400 series of Division 00, except for Document 00410B – Bid Form, Part B, are not part of the Contract.

Doc. No.	Document Title	Doc. Date
	INTRODUCTORY INFORMATION	
00010	Table of Contents	08-01-2015
00015	List of Drawings	02-01-2004
00041	List of Pre-Qualified Asbestos/Lead Abatement, Mold & Soil Remediation, Demolition & Petroleum Storage Tank Removal Contractors	03-21-2012
	BIDDING REQUIREMENTS	
	INSTRUCTIONS TO BIDDERS	
00200	Instructions to Bidders	08-01-2015
00210	Supplementary Instructions to Bidders	08-01-2015
00220	Request for Bid Information	06-11-2004
	INFORMATION AVAILABLE TO BIDDERS	
00320	Geotechnical Information	09-02-2005
00340	Environmental Information	09-14-2005
	BID FORMS AND SUPPLEMENTS	
00410	Bid Form, Parts A & B	08-01-2015
00430	Bidder's Bond (For filing; Example Form)	02-01-2004
00450	Bidder's Statement of MWBE/PDBE/DBE/SBE Status	07-01-2013
00452	Contractor Submission List – Fair Campaign Ordinance	04-30-2004
00453	Bidder's Statement of Residency	02-01-2004
00454	Affidavit of Non-interest	02-01-2004

00455 Affidavit of Ownership or Control 09-04-2007
00457 Conflict of Interest Questionnaire..... 02-28-2006
00459 Contractor's Statement Regarding Previous Contracts Subject to EEO 02-01-2004
00460 (POP-1) Pay or Play Program Acknowledgement Form 07-03-2012
00470 Bidder's MWSBE Participation Plan 08-01-2015
00471 Pre-bid Good Faith Efforts 08-01-2015
00472 Bidder's Goal Deviation Request 08-01-2015

POST-BID PROCEDURES
00495 Post-bid Procedures 08-01-2013

CONTRACTING REQUIREMENTS

AGREEMENT
00500 Form of Business 02-01-2004
00501 Resolution of Contractor 02-01-2010
00520 Agreement 07-01-2013
00570 Contractor's Revised MWSBE Participation Plan 08-01-2013
00571 Record of Post-Award Good Faith Efforts 08-01-2013
00572 Contractor's Request for Plan Deviation 08-01-2013

BONDS AND CERTIFICATES
00600 List of Proposed Subcontractors and Suppliers 07-01-2013
00601 Drug Policy Compliance Agreement 02-01-2004
00602 Contractor's Drug Free Workplace Policy (For filing)
00603 Checklist for Drug Policy Submittal 02-09-2012
00604 History of OSHA Actions and List of On-the-job Injuries 02-01-2004
00605 List of Safety Impact Positions 02-01-2004
00606 Contractor's Certification of No Safety Impact Positions 02-01-2004
00607 Certification Regarding Debarment, Suspension, and Other Responsibility Matters 02-01-2004
00610 Performance Bond 05-17-2005
00611 Statutory Payment Bond 05-17-2005
00612 One-year Maintenance Bond 05-17-2005
00613 One-year Surface Correction Bond 05-17-2005
00620 Affidavit of Insurance (with attached Certificates of Insurance) 02-01-2004
00622 Name and Qualifications of Proposed Superintendent (For filing)
00624 Affidavit of Compliance with Affirmative Action Program 02-01-2004
00630 (POP-2) Certification of Compliance with Pay or Play Program 07-03-2012
00631 (POP-3) City of Houston Pay or Play Program – List of Subcontractors 07-03-2012
00633 Equal Employment Opportunity-Certification by Material Suppliers 02-01-2010
00642 Monthly Subcontractor Payment Reporting Form 02-01-2010

00646 Payment Notification Explanation of Withholding 02-01-2010

GENERAL CONDITIONS
00700 General Conditions 08-01-2015

SUPPLEMENTARY CONDITIONS
00800 Supplementary Conditions 08-15-2015
00805 Equal Employment Opportunity Program Requirements 05-01-2012
00808 Requirements for the City of Houston Program for Minority, Women, and Small Business Enterprises (MWSBE), and Persons with Disabilities Business Enterprises (PDBE) 08-01-2013
00820 Wage Scale for Engineering Construction 02-01-2015
00830 Trench Safety Geotechnical Information 02-01-2004
00840 Pay or Play Program Requirements 07-03-2012

ADDENDA AND MODIFICATIONS
00910 Addendum 02-01-2004
00911 Notice of Addendum 02-01-2004
00931 Request for Information 02-01-2004

SPECIFICATIONS

DIVISION 1 - GENERAL REQUIREMENTS
01110 Summary of Work 06-27-2005
01145 Use of Premises 01-01-2011
01255 Change Order Procedures 08-01-2003
01270 Measurement and Payment 08-01-2003
01292 Schedule of Values 08-01-2003
01312 Coordination and Meetings 08-01-2003
01321 Construction Photographs 08-01-2003
01325 Construction Schedule 08-01-2003
01326 Construction Schedule (Bar Chart) 08-01-2003
01330 Submittal Procedures 08-01-2003
01340 Shop Drawings, Product Data, and Samples 08-01-2003
01351 Environmental Safety and Worker Protection 01-01-2011
01410 TPDES Requirements (with Attachments) 02-01-2011
01422 Reference Standards 08-01-2003
01450 Contractor's Quality Control 08-01-2003
01452 Inspection Services 08-01-2003
01454 Testing Laboratory Services 08-01-2003
01502 Mobilization 08-01-2008
01504 Temporary Facilities and Controls 01-01-2011
01506 Diversion Pumping 08-01-2003
01520 Temporary Field Office 02-08-2012

01554 Traffic Control and Street Signs 07-01-2012
01555S Traffic Control and Regulation 10-04-2013
*01555 Traffic Control and Regulation 01-01-2011
01562 Tree and Plant Protection 01-01-2011
01570 Storm Water Pollution Prevention Control 01-26-2012
01575 Stabilized Construction Access 02-01-2011
01576 Waste Material Disposal 08-01-2003
01578 Control of Ground and Surface Water 01-01-2011
01580 Project Identification Signs 08-01-2003
01581 Excavation in Public Way Permit Signs 08-01-2003
01610 Basic Product Requirements 01-01-2011
01630 Product Substitution Procedures 08-01-2003
01725 Field Surveying 01-01-2011
01731 Cutting and Patching 01-01-2011
01732 Procedure for Water Valve Assistance (with Attachments) 08-01-2003
01740S Site Restoration 03-30-2010
*01740 Site Restoration 08-01-2003
01755 Starting Systems 08-01-2003
01770 Closeout Procedures 08-01-2003
01782 Operations and Maintenance Data 08-01-2003
01785 Project Record Documents 08-01-2003

DIVISION 2 - SITE WORK

**02081 CAST-IN-PLACE CONCRETE MANHOLES 01-01-2011
02082 PRECAST CONCRETE MANHOLES 12-01-2014**
02084S FRAMES, GRATES, RINGS, AND COVERS 03-30-2010
***02084 FRAMES, GRATES, RINGS, AND COVERS 12-01-2014
02085 VALVE BOXES, METER BOXES, AND METER VAULTS 01-01-2011
02086 ADJUSTING MANHOLES, INLETS, AND VALVE BOXES TO GRADE 01-01-2011
02087 BRICK MANHOLE FOR STORM SEWER 10-01-2002**
02105 CHEMICAL SAMPLING AND ANALYSIS 03-18-2005
02120 OFF-SITE TRANSPORTATION AND DISPOSAL 03-18-2005
02136 WASTE MATERIAL HANDLING, TESTING AND DISPOSAL 01-01-2011
02221S REMOVING EXISTING PAVEMENTS, STRUCTURES, WOOD, AND DEMOLITION DEBRIS 11-17-2012
***02221 REMOVING EXISTING PAVEMENTS, STRUCTURES, WOOD, AND DEMOLITION DEBRIS 07-01-2009
02222 ABANDONMENT OF SEWERS 01-01-2011
02233 CLEARING AND GRUBBING 01-01-2011
02260 TRENCH SAFETY SYSTEM 02-01-2011**
02315S ROADWAY EXCAVATION 01-17-2013
***02315 ROADWAY EXCAVATION 07-01-2009
02316 EXCAVATION AND BACKFILL FOR STRUCTURES 01-01-2011
02317 EXCAVATION AND BACKFILL FOR UTILITIES 01-01-2011**

02318 EXTRA UNIT PRICE WORK FOR EXCAVATION AND BACKFILL 01-01-2011
02319 BORROW 01-01-2011
02320 UTILITY BACKFILL MATERIALS 01-01-2011
02321 CEMENT STABILIZED SAND 01-01-2011
02322 FLOWABLE FILL 08-01-2008
02330 EMBANKMENT 10-01-2002
02336 LIME-STABILIZED SUBGRADE 10-01-2002
02448 PIPE AND CASING AUGERING FOR SEWERS 10-01-2002
02465 DRILLED SHAFT FOUNDATIONS 10-01-2002
02501 DUCTILE IRON PIPE AND FITTINGS 02-01-2011
02502 STEEL PIPE AND FITTINGS 01-01-2011
02503 COPPER TUBING 10-01-2002
02505 HIGH DENSITY POLYETHYLENE (HDPE) SOLID AND PROFILE WALL PIPE 02-01-2011
02506 POLYVINYL CHLORIDE PIPE 01-01-2011
02511S WATER LINES 10-21-2013
***02511 WATER LINES 01-01-2011**
02512 WATER TAP AND SERVICE LINE INSTALLATION 04-27-2012
02513S WET CONNECTIONS 11-17-2012
***02513 WET CONNECTIONS 10-01-2002**
02514 DISINFECTION OF WATER LINES 01-01-2011
02515 HYDROSTATIC TESTING OF PIPELINES 01-01-2011
02516 CUT, PLUG, AND ABANDONMENT OF WATER LINES 01-01-2011
02520 FIRE HYDRANTS 05-05-2011
02521 GATE VALVES 01-01-2011
02525S TAPPING SLEEVES AND VALVES 11-17-2012
***02525 TAPPING SLEEVES AND VALVES 01-01-2011**
02526 WATER METERS 01-01-2011
02527 POLYURETHANE COATINGS ON STEEL OR DUCTILE IRON PIPE 10-01-2002
02528 POLYETHYLENE ENCASEMENT/WRAP 01-01-2011
02531 GRAVITY SANITARY SEWERS 01-01-2011
02533 ACCEPTANCE TESTING FOR SANITARY SEWERS 01-01-2011
02534 SANITARY SEWER SERVICE STUBS OR RECONNECTIONS ... 01-01-2011
02553 POINT REPAIR AND OBSTRUCTION REMOVALS 01-01-2011
02558 CLEANING AND TELEVISION INSPECTION 01-01-2011
02581 STREET LIGHTING CONDUIT 10-01-2002
02582 TRAFFIC SIGNAL POLE ASSEMBLIES (STEEL) 07-01-2009
02611 REINFORCED CONCRETE PIPE 12-01-2014
02612 PRECAST REINFORCED CONCRETE BOX SEWERS 12-01-2014
02621 GEOTEXTILE 10-01-2002
02631 STORM SEWERS 12-01-2014
02632 CAST-IN-PLACE INLETS, HEADWALLS,

	AND WINGWALLS	10-01-2002
02633	PRECAST CONCRETE INLETS, HEADWALLS, AND WINGWALLS	10-01-2002
02711	HOT MIX ASPHALT BASE COURSE	07-01-2009
02712	CEMENT STABILIZED BASE COURSE	10-01-2002
02713	RECYCLED CRUSHED CONCRETE BASE COURSE	07-01-2009
02714	FLEXIBLE BASE COURSE FOR TEMPORARY DRIVEWAYS	07-01-2009
02741	ASPHALTIC CONCRETE PAVEMENT	07-01-2009
02742	PRIME COAT	10-01-2002
02743	TACK COAT	10-01-2002
02751	CONCRETE PAVING	07-01-2009
02752S	*Concrete Pavement Joints*	*12-29-2009*
*02752	CONCRETE PAVEMENT JOINTS	10-01-2002
02753	CONCRETE PAVEMENT CURING	10-01-2002
02754	CONCRETE DRIVEWAYS	09-01-2002
02761	COLORED CONCRETE FOR MEDIANS AND SIDEWALKS	09-01-2002
02764	RAISED PAVEMENT MARKERS	07-01-2012
02765	PREFORMED PAVEMENT MARKINGS	07-01-2012
02767	THERMOPLASTIC PAVEMENT MARKINGS	07-01-2012
02771	CURB, CURB AND GUTTER, AND HEADERS	10-01-2002
02772	CONCRETE MEDIANS AND DIRECTIONAL ISLANDS	10-01-2002
02775	CONCRETE SIDEWALKS	10-01-2002
02811	LANDSCAPE IRRIGATION	10-01-2002
02893	TRAFFIC SIGNAL CONSTRUCTION	07-01-2009
02911	TOPSOIL	10-01-2002
02912	TREE, PLANT, AND HARDSCAPE PROTECTION	07-01-2009
02915	TREE PLANTING	01-01-2011
02921	HYDRO MULCH SEEDING	01-01-2011
02922	SODDING	07-01-2009
02951	PAVEMENT REPAIR AND RESTORATION	07-01-2009
02960	MILLING PAVEMENT	07-01-2009
DIVISION 3 - CONCRETE		
03315	CONCRETE FOR UTILITY CONSTRUCTION	10-01-2002
DIVISION 4 - MORTAR		
04061	MORTAR	10-01-2002
04210	BRICK MASONRY FOR UTILITY CONSTRUCTION	10-01-2002
DIVISION 5 - METALS		
05501	METAL FABRICATIONS	01-01-2011

DIVISION 6 - WOOD AND PLASTICS – NOT USED
DIVISION 7 - THERMAL AND MOISTURE PROTECTION – NOT USED
DIVISION 8 - DOORS AND WINDOWS – NOT USED
DIVISION 9 - FINISHES

09901 PROTECTIVE COATINGS 01-01-2011
DIVISION 10 – SPECIALTIES – NOT USED
DIVISION 11 – EQUIPMENT – NOT USED
DIVISION 12 – FURNISHINGS – NOT USED
DIVISION 13 - SPECIAL CONSTRUCTION – NOT USED
DIVISION 14 - CONVEYING SYSTEMS – NOT USED
DIVISION 15 – MECHANICAL – NOT USED
DIVISION 16 – ELECTRICAL
16010 BASIC ELECTRICAL REQUIREMENTS 01-01-2011
16709 COMMUNICATIONS CONDUIT 07-01-2012
16710 PULL BOXES 07-01-2009
16711 TRAFFIC SIGNAL CONDUIT 07-01-2009
16713 PRE-FORMED LOOPS 07-01-2012
16715 VEHICLE SIGNAL HEADS 07-01-2009
16716 PEDESTRIAN SIGNAL HEADS 07-01-2009
16717 PROGRAMMABLE VEHICLE SIGNAL HEADS 07-01-2009
16718 VEHICLE TRAFFIC CONTROL SIGNAL HEADS – LIGHT EMITTING DIODE (LED) CIRCULAR SIGNAL SUPPLEMENT 07-01-2009
16719 COUNTDOWN PEDESTRIAN SIGNAL MODULE 07-01-2009
16720 TRAFFIC SIGNAL CABLE 07-01-2009
16724 EMERGENCY VEHICLE PREEMPTION (EVP) 07-01-2015
16727 TRAFFIC SIGNAL SAW-CUT LOOP DETECTOR 07-01-2012
16730 ITS CONTROLLER CABINET ASSEMBLY 07-01-2012
16732 UNINTERRUPTIBLE POWER SUPPLY (UPS) SYSTEM FOR TRAFFIC SIGNAL CABINETS 07-01-2012
16733 MANAGED FIELD HARDENED ETHERNET SWITCH 07-01-2012
16734 WIMAX 07-01-2012
16735 FIBER OPTIC SPLICE ENCLOSURE 07-01-2012
16736 FIBER DISTRIBUTION UNIT 07-01-2009
16737 COMMUNICATION SERVICE BOX 07-01-2012
16738 WIRELESS COMMUNICATION SYSTEM 07-01-2009
16740 SINGLE MODE FIBER OPTIC CABLE SYSTEM 07-01-2012
16748 SYSTEM INTEGRATION 07-01-2012
16750 ACCESSIBLE PEDESTRIAN PUSH BUTTON STATION 07-01-2009
16785 GPS SERIAL COMMUNICATIONS 07-01-2012

ADDITIONAL SPECIFICATIONS

TEXAS DEPARTMENT OF TRANSPORTATION (TxDOT)

467 Safety End Treatment 11-01-2004
6834 Portable Changeable Message Sign 06-07-2004

CENTERPOINT ENERGY SPECIFICATIONS

007-371-08 Installation of Conduit System for Thoroughfare Street Lighting..... 07-25-2007

APPENDICES

Geotechnical Report .....PDF on CD
Trench Safety Letter.....PDF on CD
ESA I Report .....PDF on CD
ESA II Report .....PDF on CD
SWPPP Report.....PDF on CD

END OF DOCUMENT

Document 00015

LIST OF DRAWINGS

Sheet No.	Drawing Title
1	COVER SHEET
2	DRAWING INDEX
3	LEGEND AND ABBREVIATIONS
4	CONSTRUCTION NOTES, PRIVATE UTILITY NOTES, WATER LINE PROTECTION NOTES AND VARIANCE TABLES
5	SURVEY CONTROL MAP (SHEET 1 OF 2)
6	SURVEY CONTROL MAP (SHEET 2 OF 2)
7	SWING TIES (SHEET 1 OF 2)
8	SWING TIES (SHEET 2 OF 2)
9	OVERALL SHEET LAYOUT
10	DRAINAGE AREA MAP SUB-PROJECT 1 AREA 2-YEAR SHEET 1 OF 3
11	DRAINAGE AREA MAP SUB-PROJECT 2 AREA 2-YEAR SHEET 2 OF 3
12	DRAINAGE AREA MAP SUB-PROJECT 2 AREA 2-YEAR SHEET 3 OF 3
13	DRAINAGE AREA CALCULATIONS 2-YEAR EXISTING AND PROPOSED
14	DRAINAGE AREA CALCULATIONS 100-YEAR PROPOSED
15	DRAINAGE CALCULATIONS (HOUSTORM) 2-YEAR
16	DRAINAGE CALCULATIONS (HOUSTORM) INLET ANALYSIS FOR SUB-PROJECT 2 AREA SHEET 1 OF 2
17	DRAINAGE CALCULATIONS (HOUSTORM) INLET ANALYSIS FOR SUB-PROJECT 2 AREA SHEET 2 OF 2
18	TYPICAL SECTIONS – SHEET 1 OF 2
19	TYPICAL SECTIONS – SHEET 2 OF 2
20	DRIVEWAY SCHEDULE
21	PLAN RAMPART STREET STA 16+00 TO STA 20+00
22	PROFILE RAMPART STREET STA 16+00 TO STA 20+00
23	PLAN RAMPART STREET STA 20+00 TO STA 24+00
24	PROFILE RAMPART STREET STA 20+00 TO STA 24+00
25	PLAN RAMPART STREET STA 24+00 TO STA 28+00
26	PROFILE RAMPART STREET STA 24+00 TO STA 28+00
27	PLAN RAMPART STREET STA 28+00 TO STA 32+00
28	PROFILE RAMPART STREET STA 28+00 TO STA 32+00
29	PLAN RAMPART STREET STA 32+00 TO STA 35+00
30	PROFILE RAMPART STREET STA 32+00 TO STA 35+00
31	PLAN RAMPART STREET STA 35+00 TO STA 39+00
32	PROFILE RAMPART STREET STA 35+00 TO STA 39+00
33	PLAN RAMPART STREET STA 39+00 TO STA 43+00

34	PROFILE RAMPART STREET STA 39+00 TO STA 43+00
35	PLAN RAMPART STREET STA 43+00 TO STA 47+00
36	PROFILE RAMPART STREET STA 43+00 TO STA 47+00
37	PLAN RAMPART STREET STA 47+00 TO STA 51+00
38	PROFILE RAMPART STREET STA 47+00 TO STA 51+00
39	PLAN RAMPART STREET STA 51+00 TO STA 55+00
40	PROFILE RAMPART STREET STA 51+00 TO STA 55+00
41	PLAN RAMPART STREET STA 55+00 TO STA 59+35
42	PROFILE RAMPART STREET STA 55+00 TO STA 59+35
43	PLAN RAMPART STREET STA 59+35 TO STA 63+50
44	PROFILE RAMPART STREET STA 59+35 TO STA 63+50
45	PLAN CLAREWOOD DRIVE STA 0+00 TO STA 4+00
46	PROFILE CLAREWOOD DRIVE STA 0+00 TO STA 4+00
47	PLAN CLAREWOOD DRIVE STA 4+00 TO STA 7+50
48	PROFILE CLAREWOOD DRIVE STA 4+00 TO STA 7+50
49	PLAN CLAREWOOD DRIVE STA 7+50 TO STA 10+00
50	PROFILE CLAREWOOD DRIVE STA 7+50 TO STA 10+00
51	PLAN MULLINS DRIVE STA 0+00 TO STA 4+00
52	PROFILE MULLINS DRIVE STA 0+00 TO STA 4+00
53	PLAN MULLINS DRIVE STA 4+00 TO STA 8+25
54	PROFILE MULLINS DRIVE STA 4+00 TO STA 8+25
55	PLAN MULLINS DRIVE STA 8+25 TO STA 12+50
56	PROFILE MULLINS DRIVE STA 8+25 TO STA 12+50
57	PLAN BISSONNET STREET STA 0+00 TO STA 3+00
58	PROFILE BISSONNET STREET STA 0+00 TO STA 3+00
59	PLAN AND PROFILE EVERGREEN STREET STA 0+00 TO STA 2+00
60	LATERAL PROFILES SHEET 1 OF 4
61	LATERAL PROFILES SHEET 2 OF 4
62	LATERAL PROFILES SHEET 3 OF 4
63	LATERAL PROFILES SHEET 4 OF 4
64	CITY OF HOUSTON PROJECT SIGN STANDARD DETAIL
65	CITY OF HOUSTON STORM SEWER STANDARD DETAILS – SHEET 1 OF 2
66	CITY OF HOUSTON STORM SEWER STANDARD DETAILS – SHEET 2 OF 2
67	CITY OF HOUSTON PAVING STANDARD DETAILS SHEET 1 OF 2
68	CITY OF HOUSTON PAVING STANDARD DETAILS SHEET 2 OF 2
69	CITY OF HOUSTON SANITARY SEWER STANDARD DETAILS-SHEET 1
70	CITY OF HOUSTON SANITARY SEWER STANDARD DETAILS-SHEET 2
71	CITY OF HOUSTON WATER STANDARD DETAILS
72	CITY OF HOUSTON SIDEWALK AND WHEELCHAIR RAMP STANDARD DETAILS
73	MISCELLANEOUS DETAILS

74	CITY OF HOUSTON PAVEMENT MARKING STANDARD DETAILS
75	TRAFFIC CONTROL PLAN NOTES, CHANNELIZING DEVICES AND BARRICADES SHEET 1 OF 45
76	TRAFFIC CONTROL PLAN OVERALL PHASING LAYOUT SHEET 2 OF 45
77	TRAFFIC CONTROL PLAN PHASE 1, STEP 1 SHEET 3 OF 45
78	TRAFFIC CONTROL PLAN PHASE 1, STEP 2 SHEET 4 OF 45
79	TRAFFIC CONTROL PLAN PHASE 1, STEP 3 SHEET 5 OF 45
80	TRAFFIC CONTROL PLAN PHASE 1, STEP 4 SHEET 6 OF 45
81	TRAFFIC CONTROL PLAN PHASE 1, STEP 5 SHEET 7 OF 45
82	TRAFFIC CONTROL PLAN PHASE 1, STEP 6 SHEET 8 OF 45
83	TRAFFIC CONTROL PLAN PHASE 1, STEP 1A SHEET 9 OF 45
84	TRAFFIC CONTROL PLAN TYPICAL DETOUR MAP PHASE 2 SHEET 10 OF 45
85	TRAFFIC CONTROL PLAN PHASE 2, STEP 1 SHEET 11 OF 45
86	TRAFFIC CONTROL PLAN PHASE 2, STEP 1 SHEET 12 OF 45
87	TRAFFIC CONTROL PLAN PHASE 2, STEP 2 SHEET 13 OF 45
88	TRAFFIC CONTROL PLAN PHASE 2, STEP 2 SHEET 14 OF 45
89	TRAFFIC CONTROL PLAN PHASE 2, STEP 3 SHEET 15 OF 45
90	TRAFFIC CONTROL PLAN PHASE 2, STEP 3 SHEET 16 OF 45
91	TRAFFIC CONTROL PLAN PHASE 3, STEP 1 SHEET 17 OF 45
92	TRAFFIC CONTROL PLAN PHASE 3, STEP 2 SHEET 18 OF 45
93	TRAFFIC CONTROL PLAN PHASE 3, STEP 3 SHEET 19 OF 45
94	TRAFFIC CONTROL PLAN PHASE 3, STEP 4 SHEET 20 OF 45
95	TRAFFIC CONTROL PLAN PHASE 3, STEP 5 SHEET 21 OF 45
96	TRAFFIC CONTROL PLAN PHASE 3, STEP 6 SHEET 22 OF 45
97	TRAFFIC CONTROL PLAN TYPICAL DETOUR MAP PHASE 4 SHEET 23 OF 45
98	TRAFFIC CONTROL PLAN PHASE 4, STEP 1 SHEET 24 OF 45
99	TRAFFIC CONTROL PLAN PHASE 4, STEP 2 SHEET 25 OF 45
100	TRAFFIC CONTROL PLAN PHASE 4, STEP 3 SHEET 26 OF 45
101	TRAFFIC CONTROL PLAN PHASE 4, STEP 4 SHEET 27 OF 45
102	TRAFFIC CONTROL PLAN PHASE 4, STEP 5 SHEET 28 OF 45
103	TRAFFIC CONTROL PLAN TYPICAL DETOUR MAP PHASE 5 SHEET 29 OF 45
104	TRAFFIC CONTROL PLAN PHASE 5, STEP 1 SHEET 30 OF 45
105	TRAFFIC CONTROL PLAN PHASE 5, STEP 1 SHEET 31 OF 45
106	TRAFFIC CONTROL PLAN PHASE 5, STEP 2 SHEET 32 OF 45
107	TRAFFIC CONTROL PLAN PHASE 5, STEP 2 SHEET 33 OF 45
108	TRAFFIC CONTROL PLAN TYPICAL ONE LANE ROAD CLOSURE FOR UTILITY WORK SHEET 34 OF 45
109	TRAFFIC CONTROL PLAN TYPICAL ONE LANE ROAD CLOSURE WITH DETOUR ROUTING SHEET 35 OF 45

110	TRAFFIC CONTROL PLAN TYPICAL 4-WAY INTERSECTION WITH FLAGGING OPERATION SHEET 36 OF 45
111	TRAFFIC CONTROL PLAN TYPICAL TEE INTERSECTION WITH FLAGGING OPERATION SHEET 37 OF 45
112	TRAFFIC CONTROL PLAN TYPICAL LEFT LANE CLOSURE OF A MULTILANE STREET SHEET 38 OF 45
113	TRAFFIC CONTROL PLAN TYPICAL RIGHT LANE CLOSURE OF A MULTILANE STREET SHEET 39 OF 45
114	TRAFFIC CONTROL PLAN TYPICAL CLOSURE OF ONE ROADWAY OF A MULTILANE STREET SHEET 40 OF 45
115	TRAFFIC CONTROL PLAN FOR TRAFFIC SIGNAL CONSTRUCTION SHEET 41 OF 45
116	TRAFFIC CONTROL PLAN FOR TYPICAL CROSSWALK AND SIDEWALK CLOSURES SHEET 42 OF 45
117	TRAFFIC CONTROL PLAN BARRICADE STANDARD SHEET 43 OF 45
118	TXDOT LOW PROFILE CONCRETE BARRIER PRECAST BARRIER (TYPE 1) LPCB – 10 SHEET 44 OF 45
119	TXDOT LOW PROFILE CONCRETE BARRIER PRECAST BARRIER (TYPE 2) LPCB – 10 SHEET 45 OF 45
120	TEMPORARY TRAFFIC SIGNAL PLAN RAMPART AT BISSONNET PHASE 1, STEP 1
121	TEMPORARY TRAFFIC SIGNAL PLAN RAMPART AT BISSONNET PHASE 1, STEP 2
122	TEMPORARY TRAFFIC SIGNAL PLAN RAMPART AT BISSONNET PHASE 1, STEP 3
123	TEMPORARY TRAFFIC SIGNAL PLAN RAMPART AT BISSONNET PHASE 1, STEP 4
124	TEMPORARY TRAFFIC SIGNAL PLAN RAMPART AT BISSONNET PHASE 1, STEP 5
125	TEMPORARY TRAFFIC SIGNAL PLAN RAMPART AT BISSONNET PHASE 1, STEP 6
126	TEMPORARY TRAFFIC SIGNAL PLAN RAMPART AT BELLAIRE PHASE 3, STEP 1
127	TEMPORARY TRAFFIC SIGNAL PLAN RAMPART AT BELLAIRE PHASE 3, STEP 2
128	TEMPORARY TRAFFIC SIGNAL PLAN RAMPART AT BELLAIRE PHASE 3, STEP 3
129	TEMPORARY TRAFFIC SIGNAL PLAN RAMPART AT BELLAIRE PHASE 3, STEP 4
130	TEMPORARY TRAFFIC SIGNAL PLAN RAMPART AT BELLAIRE PHASE 3, STEP 5
131	TEMPORARY TRAFFIC SIGNAL PLAN RAMPART AT BELLAIRE PHASE 3, STEP 6
132	TRAFFIC GENERAL NOTES

133	EXISTING TRAFFIC SIGNAL LAYOUT RAMPART AT BISSONNET
134	PROPOSED TRAFFIC SIGNAL LAYOUT RAMPART AT BISSONNET
135	TRAFFIC SIGNAL POLE SCHEDULE RAMPART AT BISSONNET
136	TRAFFIC SIGNAL CABLE SCHEMATIC RAMPART AT BISSONNET HIGH VOLTAGE CIRCUIT
137	TRAFFIC SIGNAL CABLE SCHEMATIC RAMPART AT BISSONNET LOW VOLTAGE CIRCUIT
138	EXISTING TRAFFIC SIGNAL LAYOUT RAMPART AT BELLAIRE
139	PROPOSED TRAFFIC SIGNAL LAYOUT RAMPART AT BELLAIRE
140	TRAFFIC SIGNAL POLE SCHEDULE RAMPART AT BELLAIRE
141	TRAFFIC SIGNAL CABLE SCHEMATIC RAMPART AT BELLAIRE HIGH VOLTAGE CIRCUIT
142	TRAFFIC SIGNAL CABLE SCHEMATIC RAMPART AT BELLAIRE LOW VOLTAGE CIRCUIT
143	TRAFFIC SIGNAL DETAILS SHEET 1 OF 5
144	TRAFFIC SIGNAL DETAILS SHEET 2 OF 5
145	TRAFFIC SIGNAL DETAILS SHEET 3 OF 5
146	TRAFFIC SIGNAL DETAILS SHEET 4 OF 5
147	TRAFFIC SIGNAL DETAILS SHEET 5 OF 5
148	STREET LIGHTING PLAN SHEET 1 OF 4
149	STREET LIGHTING PLAN SHEET 2 OF 4
150	STREET LIGHTING PLAN SHEET 3 OF 4
151	STREET LIGHTING PLAN SHEET 4 OF 4
152	STORM WATER POLLUTION PREVENTION PLAN SHEET 1 OF 2
153	STORM WATER POLLUTION PREVENTION PLAN SHEET 2 OF 2
154	TREE PROTECTION PLAN SHEET 1 OF 5
155	TREE PROTECTION PLAN SHEET 2 OF 5
156	TREE PROTECTION PLAN SHEET 3 OF 5
157	TREE PROTECTION PLAN SHEET 4 OF 5
158	TREE PROTECTION PLAN SHEET 5 OF 5
159	SIGNING PLAN SHEET 1 OF 4
160	SIGNING PLAN SHEET 2 OF 4
161	SIGNING PLAN SHEET 3 OF 4
162	SIGNING PLAN SHEET 4 OF 4
163	SIGN DETAILS SHEET 1 OF 7
164	SIGN DETAILS SHEET 2 OF 7
165	SIGN DETAILS SHEET 3 OF 7
166	SIGN DETAILS SHEET 4 OF 7
167	SIGN DETAILS SHEET 5 OF 7
168	SIGN DETAILS SHEET 6 OF 7
169	SUMMARY OF SMALL SIGNS SHEET 7 OF 7

END OF DOCUMENT

Document 00041

LIST OF PRE-QUALIFIED ASBESTOS/LEAD ABATEMENT, MOLD & SOIL REMEDIATION, DEMOLITION AND PETROLEUM STORAGE TANK REMOVAL CONTRACTORS

1.01 DOCUMENT INCLUDES

A. Authorization

B. List of Authorized Contractors.

2.0 RELATED DOCUMENTS

A. Section 13280 – Hazardous Materials Remediation

B. Section 13281&13282 – Abatement of Asbestos/Lead Containing Materials

3.0 AUTHORIZATION

A. The list of Contractors Pre-qualified for Asbestos/Lead Abatement, Mold & Soil Remediation, Demolition & Petroleum Storage Tank Removal ("List") was authorized on March 21, 2012, by City of Houston Council Motion No. 12-0180.

B. Only those firms on the List can be utilized by Bidder in subcontracting for asbestos & lead abatement, mold & soil remediation, demolition & petroleum storage tank removal included in the Work.

C. The List is administered by General Services Department. All inquiries should be directed to Gabriel Mussio (832-393-8079).

4.0 LIST OF AUTHORIZED CONTRACTORS

A. As of the date specified in paragraph 3.0.A., all contractors listed in paragraph 4.0.B were licensed in the State of Texas for the type of work. Authorized Contractors must maintain there license to be on the list.

B. Authorized Contractors:

1. AAR Incorporated, 6640 Signat Drive, Houston, Texas 77041

2. A & M Environmental, LLC, 6536 Supply Row, Houston, Texas 77011

3. ARC Abatement Inc., 6827 Signat Drive, Houston, Texas 77041

4. AIA General Contractors, Inc., 18331 Running Vine Lane, Spring, Texas 77379

5. Arrow Services, Inc., 10202 Airline Drive, Suite A, Houston, Texas 77037

6. Basic Environmental Group, LLC., 1839 Key Biscayne Court, Houston,

Texas 77065

7. Cherry Environmental Services, Inc., 4501 Cherry Lane, Santa Fe, Texas 77517

8. Clark-Tech Environmental Systems, Inc., 1515 Globe Street, Houston, Texas 77034

9. CRG Environmental Services, LLC., 2504 Avenue I, Rosenberg, Texas 77471

10. DNB Enterprises, Inc., 12969 West Hardy, Houston, Texas 77037

11. Dunphey Petroleum Services, Inc., 3505 Daphne, Houston, Texas 77021

12. EC Government Services, 5850 San Felipe, Suite 400, Houston, Texas 77057

13. Effective Environmental, Inc., 9950 Chemical Road, Pasadena, Texas 77507

14. GenTech Construction Company, LLC., 2211 West 34th Street, Houston, Texas 77018

15. Hazard Assessment Leaders, Inc., dba HAL, Inc., 5311 Petty Street, Houston, Texas 77007

16. Inland Environmental, Ltd., PO Box 6751, Kingwood, Texas 77325

17. J.T.B. Services, Inc., 9026 Lambright, Houston, Texas 77075

18. NCM, 16421 Aldine Westfield Road, Houston, Texas 77032

19. PfP Abatement Group, LLC., 3823 Shadow Trail Drive, Houston, Texas 77084

20. PEMCO, Inc., PO Box 2009, Pearland, Texas 77588-2009

21. RNDI Companies, Inc., 2255 Ridge Road, Suite 216, Rockwell, Texas 75807

22. Separation Systems Consultants, Inc., 17041 El Camino Real, Suite 200 Houston, Texas 77058

23. Texas Environmental Control, Inc., 4623 Steffani Lane, Houston, Texas 77041

24. Weston Solutions, Inc., 5599 San Felipe, Suite 700, Houston, Texas 77056

25. 1 Priority Environmental Services, Inc., 2573 Gravel Drive, Fort Worth, Texas 76118

END OF DOCUMENT

****

List of Changes:

04-30-2004: Added List of Changes, Notice to Bidders Section. Defined new term (Code). Provided information on how errors in extending unit prices and totaling alternates would be handled. Changed document number for Notice of Intent to Award.

12-10-2004: Corrected paragraph references in Paragraphs 6.0.B, 11.0.B.2 and 11.0.C.3.

02-28-2006: Deleted Paragraphs 9.0.D and 9.0.J. Guidance on how to handle math errors in Bid Form is provided in tabular form in Document 00210 – Supplementary Instructions to Bidders.

08-10-2006: Added Small Business Enterprise (SBE) title and DBE to Paragraph 12.0 B.

04-12-2013: Added required no-contact/quiet period language as Paragraph 3.0 C., drawn from the City Procurement Manual.

02-26-2014: Add the updated no-contact/quiet period language as Paragraph 3.0 C., again drawn from the City Procurement Manual.

06-09-2015: Added language stating that Minimum Bid Prices may not be decreased in Paragraph 9.0 E.

****

Document 00200

TABLE OF CONTENTS

INSTRUCTIONS TO BIDDERS

PARA	TITLE	PAGE
1.0	*RELATED DOCUMENTS*	3
2.0	*DEFINITIONS*	3
3.0	*NOTICE TO BIDDERS*	3
4.0	*BID DOCUMENTS*	4
5.0	*EXAMINATION OF DOCUMENTS, SITE, AND LOCAL CONDITIONS*	4
6.0	*INTERPRETATIONS DURING BIDDING*	4
7.0	*ADDENDA*	4
8.0	*SUBSTITUTION OF PRODUCTS*	5
9.0	*PREPARATION OF BIDS*	5
10.0	*BID SUBMISSION*	5
11.0	*BID SECURITY*	5
12.0	*SUBCONTRACTORS AND SUPPLIERS*	6
13.0	*MODIFICATION OR WITHDRAWAL OF BID*	6
14.0	*BID DISQUALIFICATION*	6
15.0	*PREBID MEETING*	6
16.0	*OPENING OF BIDS*	6
17.0	*EVALUATION AND CONSIDERATION OF BIDS*	6
18.0	*ACCEPTANCE OF THE BID*	6

Document 00200

INSTRUCTIONS TO BIDDERS

1.0 *RELATED DOCUMENTS*

A. Document 00210 – Supplementary Instructions to Bidders.

B. Document 00320 – Geotechnical Information.

C. Document 00330 – Existing Conditions.

D. Document 00410 – Bid Form, Parts A & B.

E. Document 00495 – Post-Bid Procedures.

F. Document 00520 – Agreement.

G. Document 00700 – General Conditions.

H. Document 00800 – Supplementary Conditions.

2.0 *DEFINITIONS*

A. Definitions set forth in Document 00700 – General Conditions and in other documents of Project Manual, are applicable to Bid Documents.

B. *Addendum:* Written or graphic instrument issued prior to Bid opening, which clarifies, modifies, corrects, or changes Bid Documents.

C. *Alternate:* The total amount bid for additions to work, as described in Section 01110 – Summary of Work. Each Alternate includes cost of effects on adjacent or related components, and Bidder's overhead and profit.

D. *Bid:* A complete and properly signed offer to perform the Work in accordance with this Document and Document 00210 – Supplementary Instructions to Bidders.

E. *Bid Date:* Date and time set for receipt of Bids as stated in Document 00210 – Supplementary Instructions to Bidders, or as modified by Addenda.

F. *Bid Documents:* Project Manual, Drawings, and Addenda.

G. *Bid Supplement: A* Bid submittal that is required in Document 00410 – Bid Form.

H. *Bidder:* Person or firm, identified in Document 00410B – Bid Form – Part B, including its successors, and its authorized representative.

I. *Code:* Code of Ordinances, Houston, Texas.

J. *Low Bidder:* Apparent successful Bidder that qualifies as a responsible Bidder and that submits Bid with lowest Total Bid Price.

K. *Project Manager:* Person designated in Document 00100 – Advertisement for Bids and Document 00220 – Request for Bid Information to represent the City during bidding and post-bid periods.

L. *Project Manual:* Volume assembled for the Work that includes the bidding requirements, sample forms, Conditions of the Contract, and Specifications.

M. *Security Deposit:* A certified check, cashier's check, or bid bond in the amount of 10 percent of the Total Bid Price.

N. *Total Bid Price:* Total amount bid for performing the Work as identified by Bidder in Document 00410B – Bid Form – Part B, which amount includes:

1. Stipulated Price;
2. Total Base Unit Prices;
3. Total Extra Unit Prices;
4. Total Cash Allowances; and
5. Total Alternates.

3.0 *NOTICE TO BIDDERS*

A. The City of Houston Fair Campaign Ordinance makes it unlawful for a Contractor to offer any contribution to a candidate for City elective office (including elected officers and officers-elect) during a certain period of time prior to and following the award of the Contract by the City Council. The term "Contractor" includes proprietors of proprietorships, all partners of partnerships, and all officers, directors, and holders of 10 percent or more of the outstanding shares of corporations. A statement disclosing the names and business addresses of each of those persons will be required to be submitted with each bid or proposal; for a City Contract. Bidder shall complete and submit Document 00452 – Form A, Contractor Submission List, City of Houston Fair Campaign Ordinance, with its Bid to comply with this requirement. See Chapter 18 of the Code for further information.

B. Chapter 15, Article VIII, of the City's Code provides that no contract shall be let, nor any other business transaction entered into, by the City with any person indebted to the City or a qualifying entity, if the contractor or transaction comes within the provisions of Section 15-1 (c) of the Code. Exceptions are provided in Section 15-126 of the Code. Bidder shall complete and submit Document 00455 – Affidavit of Ownership or Control, with its Bid to comply with this requirement.

C. Neither bidder(s) nor any person acting on bidder(s)'s behalf shall attempt to influence the outcome of the award by the offer, presentation or promise of gratuities, favors, or anything of value to any appointed or elected official or employee of the City of Houston, their families or staff members. All inquiries regarding the solicitation are to be directed to the designated City Representative identified on the first page of the solicitation. Upon issuance of the solicitation through the pre-award phase and up to the date the City Secretary publicly posts notice of any City Council agenda containing the applicable award, aside from bidder's formal response to the solicitation, through the pre-award phase, written requests for clarification during the period officially designated for such purpose by the City Representative, neither bidder(s) nor persons acting on their behalf shall communicate with any appointed or elected official or employee of the City of Houston, their families or staff through written or oral means in an attempt to persuade or influence the outcome of the award or to obtain or deliver information intended to or which could reasonably result in an advantage to any bidder. However, nothing in this paragraph shall prevent a bidder from making public statements to the City Council convened for a regularly scheduled session after the official selection has been made and placed on the City Council agenda for action, or to a City Council committee convened to discuss a recommendation regarding the solicitation.

4.0 *BID DOCUMENTS*

A. The Bid Documents may be obtained at location specified in Document 00210 – Supplementary Instructions to Bidders.

B. The Bid Documents are made available only for the purpose of bidding on the Work. Receipt of Bid Documents does not grant a license for other purposes.

C. On receipt of Bid Documents, Bidder shall verify that documents are legible and complete, compare contents of Project Manual with Document 00010 – Table of Contents, and compare Index of Drawings with Document 00015 – List of Drawings. Bidder shall notify Project Manager if Bid Documents are incomplete.

D. If City of Houston Standard Specifications or Standard Details are required by the Project Manual, Bidder shall refer to Document 00210 – Supplementary Instructions to Bidders for purchase information.

5.0 *EXAMINATION OF DOCUMENTS, SITE, AND LOCAL CONDITIONS*

A. Bidder shall examine Project site, become familiar with local conditions under which the Work shall be performed, conduct appropriate investigations, and correlate personal observations with requirements of the Bid Documents before submitting a Bid.

B. Bidder shall make site investigations to the extent Bidder deems necessary to ascertain extent of subsurface conditions.

C. Failure of Bidder to perform the investigations prior to submitting a Bid does not relieve Bidder of responsibility for investigations, interpretations and proper use of available information in the preparation of its Bid.

D. Bidder shall observe limitations of access to occupied or restricted site as stated in Document 00210 – Supplementary Instructions to Bidders.

6.0 *INTERPRETATIONS DURING BIDDING*

A. Bidder shall immediately submit Document 00220 – Request for Bid Information to Project Manager upon finding errors, discrepancies, or omissions in Bid Documents. Confirmation of receipt of questions by the City is the responsibility of Bidder. Verbal discussions and answers are not binding.

B. Document 00220 – Request for Bid Information must be received at least 10 days before the Bid Date to allow issuance of Addenda in accordance with Paragraph 7.O.D. Replies, if issued, are by Addenda.

7.0 *ADDENDA*

A. Addenda that affect bidding requirements are applicable only during applicable only through issuance of the Notice to Proceed. Addenda that affect the Contract are a part of the Contract.

B. BIDDERS WHO SUBMIT A BID ON THIS PROJECT SHALL BE PRESUMED TO HAVE RECEIVED ALL ADDENDA AND TO HAVE INCLUDED ANY COST THEREOF IN THEIR BIDS, REGARDLESS OF WHETHER THEY ACKNOWLEDGE THE ADDENDA OR NOT.

C. The City will make Addenda available at same location where the Bid Documents may be obtained. The City will notify plan holders of record when Addenda are available. Bidders are responsible for obtaining Addenda after notification.

D. No Addendum will be issued later than noon on Monday before Bid Date, except Addenda with minor clarifications, withdrawing request for Bids, or postponing Bid Date.

8.0 *SUBSTITUTION OF PRODUCTS*

A. No substitutions of Products will be considered during the bidding period.

9.0 *PREPARATION OF BIDS*

A. Bidder shall fill in applicable blanks in Document 00410A&B – Bid Form – Parts A & B and Bid Supplements. In addition, Bidder shall bid all Alternates. Bidder shall properly sign Document 00410B -Bid Form.

B. Bidder shall initial all pages, except signature page, of Document 00410B – Bid Form – Part B.

C. Bidder is responsible for all costs incurred by the Bidder, associated with preparation of its Bid and compliance with Post-bid Procedures.

D. Bidder may not adjust preprinted price on line items stating "Fixed Unit Price" in the description on the Bid Form.

E. Bidder may increase, but not decrease, preprinted price on line items stating "Minimum Bid Price" in the description on the Bid Form by crossing out the minimum and inserting revised price on the line above. Bidder **may not** decrease the preprinted price on line items stating "Minimum Bid Price".

F. Bidder may decrease, but not increase, preprinted price on line items stating "Maximum Bid Price" in the description on the Bid Form by crossing out the maximum and inserting revised price on the line above. Bidder **may not** increase the preprinted price on line items stating "Maximum Bid Price".

G. Bidder shall insert a price no greater than the maximum preprinted range and no less than the preprinted range for line items stating "Fixed Range Unit Price" in the description on the Bid Form by crossing out prices noted and inserting revised price on the line above.

H. Bidder may not adjust Cash Allowance amounts.

10.0 *BID SUBMISSION*

A. City Secretary will receive Bids on Bid Date at location specified in Document 00210 – Supplementary Instructions to Bidders.

B. Bids submitted after Bid Date will be returned to Bidder unopened.

C. Verbal, facsimile, or electronic Bids are invalid and will not be considered.

D. Bidder shall submit in person or by mail one copy of the signed Document 00410 – Bid Form, Parts A and B, along with required Security Deposit, and required Bid Supplements, in a sealed, opaque envelope. In addition, Bidder shall clearly identify Project, Bid Date and Bidder's name on outside of envelope. If forwarded by mail, the sealed envelope containing the Bid must be enclosed in another envelope addressed for postal delivery.

11.0 *BID SECURITY*

A. Bidder shall submit a Security Deposit with its Bid.

B. Certified Check or Cashier's Check

1. Bidder shall make check payable to the City of Houston.

2. A check is submitted on the condition that if Bidder is named Low Bidder and fails either to timely and properly submit documents required in Document 00495 – Post-Bid Procedures, the City will cash the check in accordance with Paragraph 11.0.E.

C. Bid Bond

1. The bid bond must be a valid and enforceable bond, signed by a surety that complies with other requirements set out by law.

2. The bid bond must name the City of Houston as obligee, and be signed by the Bidder as principal and signed and sealed by the surety.

3. The bid bond must be conditioned such that if Bidder is named Low Bidder and then fails to timely and properly submit documents required in Document 00495 – Post-Bid Procedures, surety will be obligated to pay to the City an amount in accordance with Paragraph 11.0.E.

D. Security Deposits will be retained until after the Contract is awarded or all Bids are rejected.

E. Low Bidder forfeits Security Deposit if it fails to timely and properly submit documents required in Document 00495 – Post-Bid Procedures. The City may claim an amount equal to the difference between the Total Bid Price of the defaulting Bidder and the Total Bid Price of the Bidder awarded the Contract. If Security Deposit is a check, the City will reimburse any remaining balance to the defaulting Bidder.

12.0 *SUBCONTRACTORS AND SUPPLIERS*

A. The City may reject proposed Subcontractors or Suppliers.

B. Refer to Document 00800 – Supplementary Conditions, for MWBEPDBE, DBE and SBE goals.

13.0 *MODIFICATION OR WITHDRAWAL OF BID*

A. A Bidder may modify or withdraw a Bid submitted before the Bid Date by written notice to the City Secretary. The notice may not reveal the amount of the original Bid and must be signed by the Bidder.

B. Bidder may not modify or withdraw its Bid by verbal, facsimile, or electronic means.

C. A withdrawn Bid may be resubmitted up to the time designated for receipt of Bids.

14.0 *BID DISQUALIFICATION*

A. The City may disqualify a Bid if the Bidder:

1. fails to provide required Security Deposit in the proper amount;
2. improperly or illegibly completes information required by the Bid Documents;
3. fails to sign Bid or improperly signs Bid;
4. qualifies its Bid; or
5. improperly submits its Bid.

B. When requested, Low Bidder shall present satisfactory evidence that Bidder has regularly engaged in performing construction work as proposed, and has the capital, labor, equipment, and material to perform the Work.

15.0 *PREBID MEETING*

A. A prebid meeting is scheduled to be held at the place, time, and date listed in Document 00210 – Supplementary Instructions to Bidders.

B. All Bidders, subcontractors, and suppliers are invited to attend.

C. Representatives of City Engineer will attend.

16.0 *OPENING OF BIDS*

A. Bids are opened by the City Secretary and publicly read in City Council Chambers on the Public Level in City Hall Annex at 11:00 a.m. on Bid Date.

B. Place and date of Bid opening may be changed in accordance with Sections 15-3(b)(5) and 15-3(b)(6) of the City Code.

17.0 *EVALUATION AND CONSIDERATION OF BIDS*

A. Project Manager will tabulate, record and evaluate Bids.

B. The City may reject all Bids or may reject any defective Bid.

18.0 *ACCEPTANCE OF THE BID*

A. The City will send to Low Bidder Document 00498 – Notice of Intent to Award. Acceptance by the City is conditioned upon Bidder's timely and proper submittal of documents required in Document 00495 – Post-Bid Procedures.

B. The Bid remains open to acceptance and is irrevocable for the period of time stated in Document 00410A – Bid Form – Part A.

END OF DOCUMENT

Document 00210

SUPPLEMENTARY INSTRUCTIONS TO BIDDERS

The following Paragraphs modify Document 00200 - Instructions to Bidders. Where a portion of the Instructions to Bidders is modified or deleted by these Supplementary Instructions, the unaltered portions of the Instructions to Bidders remains in effect.

2.0 – DEFINITIONS: Add the following Paragraphs to this Section:

O. *Office of Business Opportunity (OBO):* All references to Affirmative Action Contract Compliance Division (AACC) set forth in Document 00700 – General Conditions and in other documents of the Project Manual, shall refer to, and include, the Office of Business Opportunity.

3.0 - NOTICE TO BIDDERS: Add the following Paragraph to this Section:

C. The City will award this contract to a "Local Business", as that term is defined in Section 15-176 of the City of Houston Code of Ordinances ("the Code"):

- If the bid of the Local Business is less than $100,000 and is the lowest responsible bid or is within 5% of the lowest bid received, or
- If the bid of the Local Business is more than $100,000 and is the lowest responsible bid or is within 3% of the lowest bid received, and
- Unless the Director determines that such an award would unduly interfere with contract needs, as provided in Section 15-181 of the Code.

If there is no bid of a Local Business that meets these criteria, the City will award the contract to the lowest responsible bidder.

4.0 – BID DOCUMENTS: Add the following Paragraphs to this Section:

A. Add the following Paragraph A.1:

1. Bid documents may only be obtained electronically at the City's website: http://bidsets.publicworks.houstontx.gov/.

D. Add the following Paragraph D.1:

1. Copies of the City Standard Specifications and Details may be acquired at no cost on the City's website **http://documents.publicworks.houstontx.gov/document-center/cat_view/88-engineering-and-construction/92-specifications/208-division-02-16-standard-specifications.html**

E. The following plan rooms, whose names, addresses, phone and fax numbers were last updated on April 9, 2007, have been authorized by the City to display Bid Documents for examination:
(Note: The Bid Documents furnished to the plan rooms for examination can be in electronic format, in hard copies, or in any other formats pertaining to each City Contracting Division's discretion.)

1. AMTEK Information Services, Inc., 4001 Sherwood Lane, Houston, TX 77092, 713-956-0100, Fax 713-956-5340, Email: planroom@amtekusa.com

2. Associated Builders & Contractors, Inc., (ABC), 3910 Kirby, Suite 131, Houston, TX 77098-4151, 713-523-6222, Fax 713-874-0747. Email: lori@abchouston.org

3. Associated General Contractors (AGC-BB) Building Branch, 3825 Dacoma, Houston, TX 77092-8717, 713-843-3700, Fax 713-843-3701. Email: karla.s@agchouston.org

4. Associated General Contractors, (AGC-HHUI), Highway, Heavy Utilities and Industrial Branch, 2400 Augusta St., Suite 180, Houston, TX 77057, 713-334-7100, Fax 713-334-7130. Email: houston@agctx.org (Attention: Mel Keyser)

5. Construction Information Network, 1225 North Loop West, Suite 550, Houston, TX 77008, 713-868-2233 ext. 329, Fax 866-852-2713. Email: paul.tilford@cnsx.com

6. F. W. Dodge Corporation, 4101 Greenbriar, Suite 320, Houston, TX 77098, 713-529-4895, Fax 713-524-7639. Email: terrie_harris@mcgraw-hill.com

7. Hispanic Contractors Association of Houston (HCA-GHA), 11 Parker Road, Suite 7, Houston, TX 77241, 713-699-2732 or 832-754-3705, Fax 713-695-1556, Email: hispanicontractorsassociation@yahoo.com; or Randymagdaleno@yahoo.com

8. Houston Minority Business Development Center, 2900 Woodridge, Suite 124, Houston, TX 77087, 713-644-0821, Fax 713-644-3523. Email: gtamez@gacompanies.com

9. Reed Construction Data, 30 Technology Parkway South, Suite 100, Norcross, GA – 30092-8629. Tel. 1-800-424-3996 or 1-800-699-8640; Fax 1-800-317-0870 or 1-800-508-5370.

10. The Builders' Exchange of Texas, Inc., 3910 Kirby, Suite 131, Houston, TX 77098, 210-564-6900, Fax: 210-564-6921, Email: houston@bxtx.com

F. Add the following Paragraph F.1:

1. **Designation as a City Business or Local Business**

To be designated as a City or Local Business for the purpose of the Hire Houston First Program, as set out in Article XI of Chapter 15 of the Houston City Code, a bidder or proposer must submit the Hire Houston First Application and Affidavit to the Director of the Mayor's Office of Business Opportunity (OBO) and receive notice that the designation has been approved prior to submission of a bid or proposal. Submit with your bid a valid official letter from OBO with your designation as a City or Local Business.

5.0 - EXAMINATION OF DOCUMENTS, SITE, AND LOCAL CONDITIONS: Insert the following paragraph:

A. Add the following Paragraph D.1:

1. The site, or part of it, is currently occupied and access is limited. Attend Prebid Meeting for information.

9.0 – PREPARATION OF BIDS: Add the following Paragraph I to this Paragraph:

I. For math errors the City encounters in analyzing Bids, the following guidance will be used:

In the event of a conflict between:	The Bid Price is:
1. Individual Unit Price and Extension of that Unit Price	Individual Unit Price times Estimated Quantity
2. A Unit Price extension and total of Unit Price Extensions	Sum of all Individual Unit Price Extensions
3. Individual Alternate and total of Alternates	Sum of all Individual Alternates
4. Individual subtotals for Stipulated Price, Base Unit Prices, Extra Unit Prices, Contractor Bonus, Cash Allowances, and Alternates; and the Total Bid Price	Sum of Individual subtotals for Stipulated Price, Base Unit Prices, Extra Unit Prices, Contractor Bonus, Cash Allowances and Alternates

10.0 – BID SUBMISSION: Add the following Paragraph A.1 to this Section:

A. Add the following Paragraph A.1:

1. City Secretary will receive Bids at 900 Bagby, Room P101, Houston, Texas until 10:30 a.m., local time on October 15, 2015.

15.0 – PREBID MEETING: Add the following Paragraph A.1 to this Section:

A. Add the following Paragraph A.1:

1. A Prebid Meeting will be held at 1:30 P.M. on Tuesday, October 6, 2015, in 15th Floor, Conference Room No. 1546 (Lobby) at 611 Walker, Houston, Texas 77002.

END OF DOCUMENT

Document 00220

REQUEST FOR BID INFORMATION

PROJECT: Rampart Street (Sub-Project 2) Drainage and Paving

PROJECT No.: WBS No. M-000265-0002-4

TO: Maher H. Saied, Sr. Project Manager
15th Floor
611 Walker, Houston, Texas 77002

Phone No. (832) 395-2215
Fax No. (832) 395-2342
Email Addr. maher.saied@houstontx.gov

(Type or Print question legibly; use back if more space is needed)

This request relates to _____ (Drawing / Detail No.) and/or _____ (Specification Section No.)

Attachments to this request: _____

_____
Signature

_____
Date

_____
(Type or Print Name)

_____
(Type or Print Company Name)

END OF DOCUMENT

Document 00320

GEOTECHNICAL INFORMATION

1. DOCUMENT INCLUDES

A. Soils investigation reports.
B. Bidder's responsibilities.

2. RELATED DOCUMENTS

A. Document 00340 – Environmental Information
B. Section 02260 - Trench Safety Systems

3. SITE INVESTIGATION REPORTS

A. In the design and preparation of Contract documents for this Project, the City and Design Consultant have used information in geotechnical reports for the investigation and analysis of soils and subsurface conditions at the Project site.

B. An electronic copy of the report for this project is included in a CD-Rom affixed to the inside front cover of the project manual.

C. Neither the City nor Design Consultant is responsible for accuracy or completeness of any information or data.

4. GEOTECHNICAL REPORTS

A. Report No.: HG1110720 Prepared by (Firm Name): HVJ Associates, Inc.; Title: Geotechnical Investigation Rampart Street Drainage Improvements; WBS # M-000265-0001-3; Report Date: January 3, 2014; No. of Pages: 91

5. BIDDER RESPONSIBILITIES

A. Bidder shall take full responsibility for interpretation and use of information contained in above listed reports for its bidding and construction purposes.

B. Bidder may perform additional soils investigations as Bidder deems appropriate.

END OF DOCUMENT

Document 00340

ENVIRONMENTAL INFORMATION

1.0 DOCUMENT INCLUDES

A. Environmental Site Assessment

B. Permit Information

C. Bidder's responsibilities.

2.0 RELATED DOCUMENTS

A. Document 00320 - Geotechnical Information

3.0 SITE INVESTIGATION REPORTS

A. In the design and preparation of Contract documents for this Project, the City and Design Consultant have used information in environmental site assessment reports for the investigation and analysis of soils and subsurface conditions at the Project site.

B. In the design and preparation of Contract documents for this Project, the City and Design Consultant have relied upon information in surveys taken for Asbestos-containing Materials (ACMs) and lead at the Project site.

C. An electronic copy of each report for this project is included in a CD-Rom affixed to the inside front cover of the project manual.

D. Neither the City nor Design Consultant is responsible for accuracy or completeness of any information or data.

4.0 REPORTS

A. Environmental Assessment Surveys

1. Report No.: 8635PI12 Prepared by (Firm Name): Berg Oliver Associates, Inc.; Title: Environmental Site Assessment; Rampart Street Area Drainage Improvements; Rampart, Pine, Renwick, Valerie and Flack Streets; M-000265-0001-3; Report Date: December 2012 No. of Pages: 316

2. Report No.: 9529H-P2 Prepared by (Firm Name): Berg Oliver Associates, Inc.; Title: Limited Phase II Environmental Site Assessment; Rampart Area Drainage and Paving Sub-Project No. 2; M-000265-0002-3; Report Date: November 2014 No. of Pages: 159

3. Prepared by (Firm Name): ISANI Consultants,L.P. Title: Storm Water Pollution Prevention Plan (SWPPP); Rampart Street (Sub-Project 2) Drainage and Paving; WBS No. M-000265-0002-3; Report Date: March 17, 2015 No. of Pages: 106

5.0 BIDDER RESPONSIBILITIES

A. Bidder shall take full responsibility for interpretation and use of information contained in above listed reports for bidding and construction purposes.

B. Bidder may perform additional investigations as Bidder deems appropriate.

END OF DOCUMENT

Document 00410A

BID FORM – PART A

To: **The Honorable Mayor and City Council of the City of Houston**
City Hall Annex
900 Bagby Street
Houston, Texas 77002

Project: *Rampart Street (Sub-Project 2) Drainage and Paving*
Project No.: WBS No. M-000265-0002-4
Bidder: _____
(Print or type full name of business entity, such as corporation, LLC, etc)

OFFER

A. Total Bid Price: Having examined the Project location and all matters referred to in Bid Documents for the Project, we, the undersigned, offer to enter into a Contract to perform the Work for the Total Bid Price shown on the signature page of this Document

B. Security Deposit: Included with the Bid is a Security Deposit in the amount of 10 percent of the Total Bid Price subject to terms described in Document 00200 – Instructions to Bidders.

C. Period for Bid Acceptance: This offer is open to acceptance and is irrevocable for 90 days from Bid Date. That period may be extended by mutual written agreement of the City and Bidder.

D. Addenda: All Addenda have been received. Modifications to Bid Documents have been considered and all related costs are included in the Total Bid Price.

E. Bid Supplements: The following documents are attached:

[X] Security Deposit *(as defined in Document 00200 – Instructions to Bidders)*
[X] Document 00450 - Bidder's Statement of MWSBE Status
[X] Document 00452 - Contractor's Submission List - Fair Campaign Ordinance Form A
[X] Document 00453 – Bidder's Statement of Residency *(not required for AIP funded project)*
[X] Document 00454 - Affidavit of Non-interest
[X] Document 00455 - Affidavit of Ownership or Control
[ ] Document 00456 - Bidder's Certificate of Compliance with Buy American Program *(required for AIP funded project)*
[X] Document 00457 – Conflicts of Interest Questionnaire (CIQ)
[ ] Document 00458 - Bidder's Certificate Regarding Foreign Trade Restriction *(required for AIP funded project)*
[ ] Document 00459 - Contractor's Statement Regarding Previous Contracts Subject to EEO *(required for AIP funded project)*

[X] Document 00460 – Pay or Play Acknowledgement Form (POP 1-A)
[X] Document 00470 – Bidder's MWSBE Participation Plan *(required unless no MWSBE participation goal is provided in Document 00800* (the "Goal"))*.*
[X] Document 00471 – Pre-bid Good Faith Efforts *(required if the goal in Bidder's Participation Plan–Document 00470 is lower than the Goal).*
[X] Document 00472 – Bidder's Goal Deviation Request *(required if the goal in Bidder's Participation Plan–Document 00470 is lower than the Goal).*
[X] Others as listed: Valid official letter from OBO with your designation as a City or Local Business *(Bidder's Participation Hire Houston First)*

CONTRACT TIME

A. If offer is accepted, Contractor shall achieve Date of Substantial Completion within **460** days after Date of Commencement of the Work, subject to adjustments of Contract Time as provided in the Contract.

Document 00410B

BID FORM – PART B

1.0 TOTAL BID PRICE HAS BEEN CALCULATED BY BIDDER, USING THE FOLLOWING COMPONENT PRICES AND PROCESS (PRINT OR TYPE NUMERICAL AMOUNTS):

A. STIPULATED PRICE: $[N/A]

(Total Bid Price; minus Base Unit Prices, Extra Unit Prices, Cash Allowances and All Alternates, if any)

B. BASE UNIT PRICE TABLE:

Item No.	Spec Ref.	Base Unit Short Title	Unit of Measure	Estimated Quantity	Unit Price (this column controls)	Total in figures
1	01502	Mobilization	LS	1	$ 250,000.00(1)	$ 250,000.00(1)
2	TxDOT 6834	Portable Changeable Message Sign	Week	28		
3	01555	Traffic Control and Regulation	LS	1	$ 69,000.00 (min)(2)	$ 69,000.00 (min)(2)
4	01555	Install Low Profile Concrete Barriers	LF	2,820		
5	01555	Relocate Low Profile Concrete Barriers	LF	4,220		
6	01555	Remove Low Profile Concrete Barriers	LF	2,820		
7	01555	Flagmen	LS	1	$ 108,000.00 (min)(2)	$ 108,000.00 (min)(2)
8	01562	Tree and Plant Protection	LS	1	$ 19,345.25 (min)(2)	$ 19,345.25 (min)(2)
9	01570	Storm Inlet Sediment Trap	EA	92		
10	01570	Inlet Protection Barrier	LF	2,320		
11	01570	Filter Fabric Fence	LF	500		
12	01570	Reinforced Filter Fabric Barrier	LF	500		
13	01575	Stabilized Construction Exit	SY	365		
14	01578	Groundwater Control for Open-Cut Construction	LF	11,946		

Item No.	Spec Ref.	Base Unit Short Title	Unit of Measure	Estimated Quantity	Unit Price (this column controls)	Total in figures
15	01740	Site Restoration	LF	6,631		
16	02086	Adjust existing manhole frame and cover to new grade	EA	33		
17	02086	Adjust existing valve box to new grade	EA	37		
18	02105	Preparatory Work for Sampling and Analysis in PPCA	LS	1	$ 18,400.00 (min)[2]	$ 18,400.00 (min)[2]
19	02120	Transportation and Disposal of Contaminated Groundwater from PPCA	GAL	2,000		
20	02120	Transportation and Disposal of Class I Soils	CY	1,500		
21	02120	Transportation and Disposal of Class II Soils	CY	1,500		
22	01555	Temporary Traffic Signals	LS	2	$ 50,000.00 (min)[2]	$ 100,000.00 (min)[2]
23	01554	Remove and Salvage Existing Sign	EA	53		
24	02221	Remove/Dispose Storm Pipe 12-inch diameter and smaller	LF	29		
25	02221	Remove and Dispose of 15" storm sewer or culvert pipe	LF	154		
26	02221	Remove/Dispose Storm Pipe 18-inch diameter	LF	3,344		
27	02221	Remove/Dispose Storm Pipe 24-inch diameter	LF	1,478		
28	02221	Remove/Dispose Storm Pipe 30-inch diameter	LF	150		
29	02221	Remove/Dispose Storm Pipe 36-inch diameter	LF	169		
30	02221	Remove/Dispose Inlets all sizes/depth	EA	48		
31	02221	Remove/Dispose Manholes all sizes/depth	EA	21		
32	02221	Remove Existing Pole Foundation	EA	6		

Bidder's Initials [ ]

Item No.	Spec Ref.	Base Unit Short Title	Unit of Measure	Estimated Quantity	Unit Price (this column controls)	Total in figures
33	02221	Remove/Dispose 6-inch diameter PVC water line.	LF	45		
34	02221	Remove/Dispose 8-inch diameter PVC water line	LF	23		
35	02221	Remove and Dispose 8-inch Sewer Line	LF	108		
36	02221	Remove and Dispose 12-inch Sewer Line	LF	36		
37	02221	Remove and Dispose of Concrete Curb and Gutter	LF	1,379		
38	02233	Clearing and Grubbing	AC	3.20		
39	02260	Trench Safety System for Trench Excavation	LF	11,946		
40	02922	Sodding	SY	13,434		
TOTAL GENERAL ITEMS						$_____
41	02222	Plug and Abandon 21-inch Storm Sewer	LF	277		
42	02222	Plug and Abandon 24-inch Storm Sewer	LF	570		
43	02222	Plug and Abandon 30-inch Storm Sewer	LF	478		
44	02222	Plug and Abandon 36-inch Storm Sewer	LF	1,072		
45	02222	Plug and Abandon 42-inch Storm Sewer	LF	583		
46	02081, 02082, 02087	Type C manhole for 42-inch diameter and smaller sewers	EA	18		
47	02081, 02082, 02087	Type C manhole for 42-inch diameter and smaller sewers within limits of PPCA	EA	1		
48	02081, 02082, 02087	Type C manhole for 48-inch to 72-inch diameter sewers	EA	10		
49	02081, 02082, 02087	MH Riser for Concrete Box Sewer	EA	37		
50	02631	12-inch Diameter Storm Sewer by open cut	LF	12		

Item No.	Spec Ref.	Base Unit Short Title	Unit of Measure	Estimated Quantity	Unit Price (this column controls)	Total in figures
51	02631	24-inch Diameter Storm Sewer by open cut	LF	2,182		
52	02631	24-inch Diameter Storm Sewer by open cut within limits of PPCA	LF	35		
53	02631	30-inch Diameter Storm Sewer by open cut	LF	41		
54	02631	30-inch Diameter Storm Sewer by open cut within limits of PPCA	LF	10		
55	02631	36-inch Diameter Storm Sewer by open cut	LF	337		
56	02631	42-inch Diameter Storm Sewer by open cut	LF	100		
57	02631	60-inch Diameter Storm Sewer by open cut	LF	1,667		
58	02631	9-foot by 9-foot Box Storm Sewer by Open-Cut	LF	1,759		
59	02631	9-foot by 9-foot Box Storm Sewer by Open-Cut within limits of PPCA	LF	204		
60	02631	8-foot by 8-foot Box Storm Sewer by Open-Cut	LF	1,271		
61	02631	7-foot by 7-foot Box Storm Sewer by Open-Cut	LF	1,329		
62	02633	Junction Box with storm manhole riser (for 9' x 9' Storm Swr Box)	EA	4		
63	02633	Junction Box with storm manhole riser (for 8' x 8' Storm Swr Box)	EA	2		
64	02633	Junction Box with storm manhole riser (for 7' x 7' Storm Swr Box)	EA	3		
65	02633	Junction Box with grate top for storm sewer (4' x 4')	EA	1		
66	02633	Type BB Inlet (Pre Cast)	EA	28		
67	02633	Type C-1 Inlet	EA	11		
68	02633	Type C-1 Inlet within limits of PPCA	EA	1		

Item No.	Spec Ref.	Base Unit Short Title	Unit of Measure	Estimated Quantity	Unit Price (this column controls)	Total in figures
69	02633	Type E Inlet (Pre Cast)	EA	38		
70	02632, 02633	Type A Grate Inlet	EA	14		
71	TxDOT 467	Precast Safety End Treatment	EA	2		
TOTAL STORM ITEMS						$_____
72	02082	Extra Depth Manhole	VF	72		
73	02086	Adjust meter box to new grade	EA	36		
74	02520	Remove and Salvage Existing Fire Hydrant	EA	6		
75	02520	Remove and Salvage Existing Fire Hydrant within limits of PPCA	EA	1		
76	02516	Cut, plug and abandon existing 2-inch diameter Water Line	EA	1		
77	02516	Cut, plug and abandon existing 4-inch diameter Water Line	EA	1		
78	02516	Cut, plug and abandon existing 8-inch diameter Water Line	EA	9		
79	02516	Cut, plug and abandon existing 12-inch diameter Water Line	EA	2		
80	02520	Fire hydrant assembly, all depths, including 6-inch diameter gate valve and box within limits of PPCA	EA	1		
81	02520	Fire hydrant assembly, all depths, including 6-inch diameter gate valve and box	EA	7		
82	02520	Fire hydrant assembly, all depths, including 6-inch diameter gate valve and box (install on existing water line)	EA	6		
83	02520	6-inch diameter fire hydrant branch by open-cut	LF	49		

Item No.	Spec Ref.	Base Unit Short Title	Unit of Measure	Estimated Quantity	Unit Price (this column controls)	Total in figures
84	02520	6-inch diameter fire hydrant branch by open-cut (install on existing water line)	LF	34		
85	02526	Relocate and reinstall meter 2-inch and smaller with new box	EA	20		
86	02512	3/4-inch to 1-inch diameter water taps and copper service line with meter box, short side	EA	11		
87	02512	1-1/2-inch to 2-inch diameter water tap and service line with meter box, short side	EA	4		
88	02512	3/4-inch to 1-inch diameter water taps and copper service line with meter box, long side	EA	2		
89	02512	1-1/2-inch to 2-inch diameter water taps and service line with meter box, long side	EA	3		
90	02513	2-inch diameter Wet Connection	EA	1		
91	02513	4-inch diameter Wet Connection	EA	1		
92	02513	6-inch diameter Wet Connection	EA	5		
93	02513	8-inch diameter Wet Connection	EA	16		
94	02513	12-inch diameter Wet Connection	EA	1		
95	02511	8-inch diameter DIP Water Line by Open-cut with Restrained Joints	LF	126		
96	02511	2-inch diameter Water Line by Open-Cut	LF	33		
97	02511	4-inch diameter Water Line by Open-Cut	LF	5		
98	02511	6-inch diameter Water Line by Open-Cut	LF	54		
99	02511	8-inch diameter Water Line by Open-Cut	LF	2,638		

Item No.	Spec Ref.	Base Unit Short Title	Unit of Measure	Estimated Quantity	Unit Price (this column controls)	Total in figures
100	02511	8-inch diameter DIP Water Line by Open-Cut within limits of PPCA	LF	85		
101	02511	12-inch diameter Water Line by Open-Cut	LF	45		
TOTAL WATER ITEMS						$_____
102	02448	8-inch Sanitary Sewer Pipe by pipe augering with Casing	LF	108		
103	02448	12-inch Sanitary Sewer Pipe by pipe augering with Casing	LF	36		
104	02531	Television inspection of existing gravity sanitary sewer	LF	4,492		
105	02553	Point Repair 8-inch diameter Sanitary Sewer	EA	12		
106	02553	Point Repair 12-inch diameter Sanitary Sewer	EA	4		
107	02534, 01110	Install cleanout (Optional)	EA	12		
108	02531, 01110	Remove and dispose - 6-inch diameter sanitary sewer (Optional)	LF	200		
109	02534, 01110	6-inch diameter sanitary sewer service lines (Optional)	LF	200		
110	02531, 01110	8-inch diameter sanitary sewer, by Open Cut (Optional)	LF	200		
TOTAL WASTEWATER ITEMS						$_____
111	02221	Remove/Dispose Conc driveway 6-inch thick/More	SY	5,452		
112	02754	Concrete Driveways including Excavation 6-inch thick	SF	8,782		
113	02754	Concrete Driveways including Excavation 7-inch thick	SF	27,355		
114	02221	Remove/Dispose Asphalt Surface/with or without Base	SY	11,050		

Item No.	Spec Ref.	Base Unit Short Title	Unit of Measure	Estimated Quantity	Unit Price (this column controls)	Total in figures
115	02221	Removing and disposing of concrete pavements (including all thickness, w/ or w/o asphalt, including base & subgrade, w/ or w/o curb, all depths)	SY	11,997		
116	02315	Roadway Excavation with or without subgrade	CY	3,796		
117	02315, 01110	Embankment Fill (Optional)	CY	435		
118	02221	Remove and Dispose Concrete Sidewalk and Ramp, all thickness	SY	2,386		
119	02315	Reshaping & Regrading Existing Ditches	LF	2,884		
120	02741	Hot Mix Asphalt Concrete Pavement 4.5-inch thick	TON	2,510		
121	02711	Hot Mix Asphalt Base Course Type (A/B) /All Thickness	TON	2,230		
122	02751	High Early Strength Reinforced Concrete Pavement 8-inch thick	SY	3,432		
123	02751	Reinforced Concrete Pavement 7-inch thick	SY	6,373		
124	02751	Reinforced Concrete Pavement 6-inch thick	SY	5,939		
125	02752S	Saw Cutting	LF	754		
126	02336	Lime Stabilized Subgrade 8-inch thick	SY	3,656		
127	02336	Lime Stabilized Subgrade 6-inch thick	SY	24,628		
128	02336	Lime for Lime Stabilized Subgrade (Dry Weight) (6%)	TON	398		
129	02771	6-inch Curb and Gutter (Monolithic) (Slotted 2-feet wide, 10-feet center to center)	LF	2,450		
130	02771	6-inch Curb and Gutter (Monolithic)	LF	1,172		
131	02771	6-inch Doweled Curb	LF	6,379		

Bidder's Initials [ ]

Item No.	Spec Ref.	Base Unit Short Title	Unit of Measure	Estimated Quantity	Unit Price (this column controls)	Total in figures
132	02771	3-foot Valley Gutter	LF	173		
133	02775	Curb Ramp	SF	3,539		
134	02775	Sidewalk 4-1/2-inch thick	SF	22,609		
135	02960	Milling Asphalt Pavement up to 2-inches	SY	1,832		
136	02741	Hot Mix Asphalt Concrete Pavement 2-inch thick	TON	202		
137	02714	Flexible Base Course/temp driveways Residential up to 12 feet Wide	EA	19		
138	02714	Flexible Base Course/temp driveways Commercial up to 24 feet Wide	EA	70		
139	02741	Temporary Asphalt Concrete Pavement for detour/Roadway and Shoulder	SY	436		
140	02915	Plant 4" tree with 100 gallon container	EA	15		
141	02752	Street Pavement Expansion Joint with Load Transfer	LF	754		
142	02752	Horizontal Dowel, 24-Inch	EA	701		
143	02765	Temporary and Removable Reflectorized Pavement Marking 4-inch wide White/Yellow	LF	23,460		
144	02765	Temporary and Removable Reflectorized Pavement Marking 24-inch wide White/Yellow	LF	120		
145	02767	Thermoplastic Pavement Marking, 4-inch wide White/Yellow (SLD/BRK)	LF	3,637		
146	02767	Thermoplastic Pavement Marking, 12-inch wide White/Yellow (SLD/BRK)	LF	3,182		
147	02767	Thermoplastic Pavement Marking, 24-inch wide White/Yellow	LF	783		

Item No.	Spec Ref.	Base Unit Short Title	Unit of Measure	Estimated Quantity	Unit Price (this column controls)	Total in figures
148	02764	Raised Pav Marker Ty I with Two face Reflective (W/Y)	EA	149		
149	02772	6-inch Concrete Median or Directional Island	SY	88		
150	02771	Concrete Paving Header	LF	148		
151	02771	Integral High Curb/Retaining Wall	LF	109		
152	01562	Zero Curb Cutback	LF	100		
153	02581	Conduit 2-inch Sch 40 PVC	LF	800		
154	02581	Conduit 2-inch Sch 80 PVC	LF	500		
TOTAL STREET ITEMS						$_____
155	02582/ 02465	30-Ft Mast Arm Pole Assembly with Foundation	EA	2		
156	02582/ 02465	35-Ft Mast Arm Pole Assembly with Foundation	EA	2		
157	02582/ 02465	40-Ft Mast Arm Pole Assembly with Foundation	EA	2		
158	02582/ 02465	45-Ft Mast Arm Pole Assembly with Foundation	EA	2		
159	02893	Pedestal Pole Assembly with Concrete Foundation	EA	10		
160	02893	Electrical Service Pedestal Assembly - ("Square D" Breakers Included)	EA	2		
161	02893	Remove and Salvage Existing Traffic Signal Equipment	EA	2		
162	02893	Overhead Street Name Signs	EA	8		
163	02893	Sign, "LEFT TURN ON GREEN ARROW ONLY", R10-5 (24" x 30")	EA	8		
164	02893	Sign, "LEFT TURN YEILD ON GREEN" R10-12(24" x 30")	EA	4		
165	16710	Type "A" Pull Box with Apron, Gravel and Ground Rod	EA	14		

Item No.	Spec Ref.	Base Unit Short Title	Unit of Measure	Estimated Quantity	Unit Price (this column controls)	Total in figures
166	16710	Type "B" Pull Box with Apron, Gravel and Ground Rod	EA	10		
167	16710	Type "C" Pull Box with Apron, Gravel and Ground Rod	EA	2		
168	16711	Conduit, 1-in Sch 80 PVC Trench	LF	80		
169	16711	Conduit, 2-in Sch 80 PVC Trench	LF	1,880		
170	16711	Conduit, 2-in Sch 80 PVC Bore	LF	230		
171	16711	Conduit, 2-in RMC	LF	50		
172	16711	Conduit, 3-in Sch 80 PVC Trench	LF	120		
173	16711	Conduit, 3-in Sch 80 PVC Bore	LF	520		
174	16711	Conduit, 4-in Sch 80 PVC Trench	LF	170		
175	16711	Conduit, 4-in Sch 80 PVC Bore	LF	570		
176	16713	Pre-formed Traffic Signal Loop Detector	EA	28		
177	16715	3-Section Vehicle Signal Head Assembly (RYG) (Horizontal) (H3)	EA	18		
178	16715	3-Section Vehicle Signal Head Assembly (RYG) (Horizontal) (H3L)	EA	4		
179	16715	3-Section Vehicle Signal Head Assembly (RYG) (Vertical) (V3L)	EA	4		
180	16719	LED Pedestrian Signal Head Assembly (Symbolic) (Countdown)	EA	20		
181	16720	Traffic Signal Cables, Detector Lead-In Cable 2/C-#14 AWG IMSA 50-2-1984	LF	9,200		
182	16720	Traffic Signal Cables, Detector Cable 2/C-#14 AWG IMSA 50-2-1985	LF	230		
183	16720	3/C-#14 AWG Solid Cable	LF	2,590		

Item No.	Spec Ref.	Base Unit Short Title	Unit of Measure	Estimated Quantity	Unit Price (this column controls)	Total in figures
184	16720	5/C-#14 AWG Solid Cable	LF	2,960		
185	16720	7/C-#14 AWG Solid Cable	LF	4,620		
186	16720	#8 AWG Bare Solid Wire	LF	3,150		
187	16720	#4 THHN Service Wire	LF	2,280		
188	16720	Pre-Empt Sensor, Opticom, 20 3/CC Shielded Cable	LF	1,460		
189	16724	Emergency Vehicle Preemption System	EA	8		
190	16727	Loop Detector Saw cut with Loop Wire	LF	600		
191	16730	ITS Controller Cabinet Assembly (Model 340) (Type 2070L)	EA	2		
192	02893	Controller Cabinet Foundation with Apron	EA	2		
193	16732	Uninterruptible Power Supply	EA	2		
194	16750	Accessible Pedestrian Push Button Station	EA	18		
195	16785	GPS Serial Communication Module	EA	2		
196	16734	WiMax Cable CAT5e	LF	800		
197	16734	WiMax Antenna	EA	1		
198	01554	Sign, "RIGHT TURN ONLY" R3-5R (30" x 36")	EA	2		
199	01554	Sign, "RIGHT TURN AND LEFT TURN ONLY- NO THRU LANE" R3-8CT (30" x 30")	EA	1		
200	01554	Sign, "PEDESTRIAN CROSSING" S1-1 (36" X 36")	EA	4		
201	01554	Sign, "DIAGONAL ARROW" SW16-7PL (24" X 12")	EA	3		

Item No.	Spec Ref.	Base Unit Short Title	Unit of Measure	Estimated Quantity	Unit Price (this column controls)	Total in figures
202	01554	Sign, "DIAGONAL ARROW" SW16-7PR (24" X 12")	EA	1		
203	01554	Sign, "STOP AHEAD" W3-1 (30" X 30")	EA	1		
204	01554	Sign, "STOP SIGN" R1-1 (36" X 36")	EA	26		
205	01554	Sign, "NO PARKING W/ARROW" R7-2(1)L (12" X 18")	EA	3		
206	01554	Sign, "NO PARKING W/ARROW" R7-2(1)R (12" X 18")	EA	8		
207	01554	Sign, "NO PARKING W/ ARROW TO CORNER" R7-2(2)R (12" X 18")	EA	2		
208	01554	Sign, "NO PARKING W/ ARROW TO CORNER" R7-2(2)L (12" X 18")	EA	1		
209	01554	Sign, "STREET NAME" D3 (MIN 30" TO MAX 48"X 9")	EA	40		
210	01554	Sign, "TOW AWAY ZONE" R7-201P (12" X 6")	EA	14		
211	01554	Sign, "CROSS TRAFFIC DOES NOT STOP" W4-4P (24" X 12")	EA	2		
212	01554	Sign, "ALL WAY" R1-3P (18" X 6")	EA	12		
213	01554	Sign, "NO PARKING W/ARROW" R7-2(1)LR (12" X 18")	EA	6		
214	01554	Sign, "NO THRU TRUCKS" R5-2(2) (24" X 30")	EA	1		
215	01554	Sign, "NO OUTLET" W14-2 (36" X 36")	EA	3		
216	01554	Sign, "NO OUTLET WITH ARROW" W14-2aL (36" X 6")	EA	3		

Item No.	Spec Ref.	Base Unit Short Title	Unit of Measure	Estimated Quantity	Unit Price (this column controls)	Total in figures
217	01554	Sign, "NO OUTLET WITH ARROW" W14-2aR (36" X 6")	EA	3		
TOTAL TRAFFIC ITEMS						$_____
TOTAL BASE UNIT PRICES						$_____

C. EXTRA UNIT PRICE TABLE:

Item No.	Spec Ref.	Base Unit Short Title	Unit of Measure	Estimated Quantity	Unit Price (this column controls)	Total in figures
218	02221	Remove miscellaneous concrete and masonry	CY	100	$15.00(2)	$1,500.00(2)
219	02317	6-inch Over Excavate trench bottom	LF	100	$3.00(2)	$300.00(2)
220	02318	Excavation around obstructions	CY	100	$20.00(2)	$2,000.00(2)
221	02318	Extra Hand Excavation	CY	100	$20.00(2)	$2,000.00(2)
222	02318	Extra Machine Excavation	CY	50	$20.00(2)	$1,000.00(2)
223	02318	Extra Placement of Backfill Material	CY	100	$20.00(2)	$2,000.00(2)
224	02318	Extra Placement of granular fill	CY	100	$20.00(2)	$2,000.00(2)
225	02318	Extra Cement Stabilized Sand	CY	100	$20.00(2)	$2,000.00(2)
226	02511	Extra Water Fittings in place	TON	1	$3000.00(2)	$3,000.00(2)
227	03315	Extra grade 60 reinforcing steel in place	LB	1000	$1.00(2)	$1,000.00(2)
228	03315	Extra class "A" concrete with or without forms	CY	100	$100.00(2)	$10,000.00(2)
TOTAL EXTRA UNIT PRICES						$26,800.00(2)

D. CASH ALLOWANCE TABLE:

Item No.	Spec Ref.	Cash Allowance Short Title	Cash Allowance in figures (1)
229	01110	Street Cut Permit	$ 3,000.00
230	01110	TPDES Permit	$ 750.00
231	01110	Lane Closure Permit Fee	$ 20,000.00
232	01110	CenterPoint Remove and/or Install Street Lights	$ 18,664.00
TOTAL CASH ALLOWANCES			$ 42,414.00

REST OF PAGE INTENTIONALLY LEFT BLANK

E. ALTERNATES TABLE:

Item No.	Spec Ref.	Base Unit Short Title	Unit of Measure	Estimated Quantity	Unit Price (this column controls)	Total in figures
		N/A				
TOTAL ALTERNATES						$_____

REST OF PAGE INTENTIONALLY LEFT BLANK

F. TOTAL BID PRICE: $_____
(Add Totals for Stipulated Price, Base Unit Price, Extra Unit Price, Cash Allowance, and All Alternates, if any)

2.0 SIGNATURES: By signing this Document, I agree that I have received and reviewed all Addenda and considered all costs associated with the Addenda in calculating the Total Bid Price.

Bidder: _____
(Print or type full name of your proprietorship, partnership, corporation, or joint venture.*)

**By: _____
Signature Date

Name: _____
(Print or type name) Title

Address: _____
(Mailing)

_____
(Street, if different)

Telephone and Fax Number: _____
(Print or type numbers)

* If Bid is a joint venture, add additional Bid Form signature sheets for each member of the joint venture.

** Bidder certifies that the only person or parties interested in this offer as principals are those named above. Bidder has not directly or indirectly entered into any agreement, participated in any collusion, or otherwise taken any action in restraint of free competitive bidding.

Note: This document constitutes a government record, as defined by § 37.01 of the Texas Penal Code. Submission of a false government record is punishable as provided in § 37.10 of the Texas Penal Code.

Footnotes for Tables B through E:
(1) Fixed Unit Price determined prior to Bid. Cannot be adjusted by the Bidder.
(2) Minimum Bid Price determined prior to Bid. Can be increased by the Bidder, but not decreased, by crossing out the Minimum and inserting revised price on the line above. **Cannot** be decreased by the Bidder.
(3) Maximum Bid Price determined prior to Bid. Can be decreased by the Bidder, but not increased, by crossing out the Maximum and inserting revised price on the line above. A Bid that increases the Maximum Bid Price may be found non-conforming and non-responsive. **Cannot** be increased by the Bidder.
(4) Fixed Range Bid Price determined prior to Bid. Unit Price can be adjusted by Bidder to any amount within the range defined by crossing out prices noted and noting revised price on the line above.

Document 00430

BIDDER'S BOND

THAT WE, _____, as Principal,
(Bidder)
("Bidder"), and the other subscriber hereto, _____, as Surety, do hereby acknowledge ourselves to be held and firmly bound to the City of Houston, a municipal corporation, in the sum of _____ Dollars ($_____) (an amount equal to 10 percent of the Total Bid Price, including Cash Allowances and Alternates, if any, for the payment of which sum, well and truly to be made to the City of Houston and its successors, the Bidder and Surety do bind themselves, their heirs, executors, administrators, successors, and assigns, jointly and severally.

THE CONDITIONS OF THIS OBLIGATION ARE SUCH THAT:

WHEREAS, the Bidder has submitted on or about this day a proposal offering to perform the following:

_____
(Project Name, Location and Number)
in accordance with the Drawings, Specifications, and terms and conditions related thereto to which reference is hereby made.

NOW, THEREFORE, if the Bidder's offer as stated in the Document 00410 – Bid Form is accepted by the City, and the Bidder executes and returns to the City Document 00520 – Agreement, required by the City, on the forms prepared by the City, for the Work and also executes and returns the same number of the Performance, Payment and Maintenance Bonds (such bonds to be executed by a Corporate Surety authorized by the State Board of Insurance to conduct insurance business in the State of Texas, and having an underwriting limitation in at least the amount of the bond) and other submittals as required by Document 00495 - Post-Bid Procedures, in connection with the Work, within the Contract Time, then this obligation shall become null and void; otherwise it is to remain in full force and effect.

If Bidder is unable to or fails to perform the obligations undertaken herein, the undersigned Bidder and Surety shall be liable to the City for the full amount of this obligation which is hereby acknowledged as the amount of damages which will be suffered by the City on account of the failure of such Bidder to perform such obligations, the actual amount of such damages being difficult to ascertain.

Notices required or permitted hereunder shall be in writing and shall be deemed delivered when actually received or, if earlier, on the third day following deposit in a United States Postal Service post office or receptacle, with proper postage affixed (certified mail, return receipt requested), addressed to the respective other Party at the address prescribed in the Contract documents, or at such other address as the receiving Party may hereafter prescribe by written notice to the sending Party.

IN WITNESS THEREOF, the Bidder and Surety have signed and sealed this instrument on the respective dates written below their signatures and have attached current Power of Attorney.

ATTEST, SEAL: (if a corporation)
WITNESS: (if not a corporation)

By: _____
Name:
Title:

ATTEST/SURETY WITNESS: (SEAL)

By: _____
Name:
Title:
Date:

_____
(Name of Bidder)

By: _____
Name:
Title:
Date:

_____
(Full Name of Surety)

_____
(Address of Surety for Notice)

_____
(Telephone Number of Surety)

By: _____
Name:
Title:
Date:

END OF DOCUMENT

Document 00450

BIDDER'S STATEMENT OF MWBE/PDBE/DBE/SBE STATUS

This certifies that the status of the Bidder, _____, in
(Bidder's Name)
regard to the City of Houston Code of Ordinances, Chapter 15, Article V, relating to City-wide percentage goals for contracting with Minority and Women-owned Business Enterprises (MWBE) and Disadvantaged Business Enterprises (DBE), Chapter 15, Article VI, relating to City-wide percentage goals for contracting with Persons with Disabilities Business Enterprises (PDBE) and Chapter 15, Article IX, relating to City-wide percentage goals for contracting with a Small Business Enterprise (SBE) is as follows:

1. Bidder (individual, partnership, corporation) is [__] is not [__] a Minority Business Enterprise as certified by the Office of Business Opportunity.

2. Bidder (individual, partnership, corporation) is [__] is not [__] a Women-owned Business Enterprise as certified by the Office of Business Opportunity

3. Bidder (individual, partnership, corporation) does [__] does not [__] declare itself to be a Persons with Disabilities Business Enterprise as defined above.

4. Bidder (individual, partnership, corporation) does [__] does not [__] declare itself to be a Disadvantaged Business Enterprise as defined above.

5. Bidder (individual, partnership, corporation) does [__] does not [__] declare itself to be a Small Business Enterprise as defined above.

Signature: _____

Title: _____

Date: _____

END OF DOCUMENT

Document 00452
Form A
CONTRACTOR SUBMISSION LIST
CITY OF HOUSTON FAIR CAMPAIGN ORDINANCE

The City of Houston Fair Campaign Ordinance makes it unlawful for a Contractor to offer any contribution to a candidate for City elective office (including elected officers-elect) during a certain period of time prior to and following the award of the Contract by the City Council. The term "Contractor" includes proprietors of proprietorships, partners or joint venturers having an equity interest of 10 percent or more for the partnership or joint venture, and officers, directors and holders of 10 percent or more of the outstanding shares of corporations. Submission of a statement disclosing the names and business addresses of each of those persons is required with each Bid/Proposal for a City Contract. See Chapter 18 of the City of Houston Code of Ordinances for further information.

This list is submitted under the provisions of Section 18-36(b) of the City of Houston Code of Ordinances in connection with the attached Bid/Proposal of:

Firm or Company Name: _____
Firm or Company Address: _____
_____

The firm/company is organized as indicated below. Check one as applicable and attach additional pages if needed to supply the required names and addresses.

[ ] SOLE PROPRIETOR

Name _____ _____
Proprietor Address

[ ] A PARTNERSHIP

LIST EACH PARTNER HAVING EQUITY INTEREST OF 10% OR MORE OF PARTNERSHIP (IF NONE STATE "NONE")

Name _____ _____
Partner Address

Name _____ _____
Partner Address

[ ] A CORPORATION

LIST ALL DIRECTORS OF THE CORPORATION (IF NONE STATE "NONE")

Name _____ _____
Director Address

Name _____ _____
Director Address

Name _____ _____
Director Address

LIST ALL OFFICERS OF THE CORPORATION (IF NONE STATE "NONE")

Name _____ _____
Officer Address

Name _____ _____
Officer Address

Name _____ _____
Officer Address

LIST ALL INDIVIDUALS OWNING 10% OR MORE OF OUTSTANDING SHARES OF STOCK OF THE CORPORATION (IF NONE STATE "NONE")

Name _____ _____
Owner Address

Name _____ _____
Owner Address

Name _____ _____
Owner Address

I certify that I am duly authorized to submit this list on behalf of the firm, that I am associated with the firm in the capacity noted below, and that I have knowledge of the accuracy of the information provided herein.

_____
Signature

_____
Printed Name

_____
Title

Note: This list constitutes a government record as defined by § 37.01 of the Texas Penal Code.

END OF DOCUMENT

Document 00453

BIDDER'S STATEMENT OF RESIDENCY

The City may not award a contract for general construction, services, or purchases to a Nonresident Bidder unless Nonresident's Bid is lower than the lowest Bid submitted by a responsible Texas Resident Bidder by the same amount that a Texas Resident bidder would be required to underbid the Nonresident Bidder to obtain a comparable contract in the state in which Nonresident's principle place of business is located.

1. This certifies that the Bidder, _____, is a State of Texas Resident Bidder as defined in TEX. GOVT. CODE ANN. § 2252.001(4) (Vernon 1994).

_____ _____
Signature Title

"Texas Resident Bidder" means a bidder whose principal place of business is in this State, and includes a Contractor whose ultimate parent company or majority owner has its principal place of business in this State. *When bidder cannot sign 1, above, proceed to 2.*

2. a. _____ is a resident of _____ and is a Nonresident Bidder as defined in TEX. GOVT. CODE ANN. § 2252.001(3) (Vernon 1994).

_____ _____
Signature Title

"Nonresident Bidder" means a bidder whose principal place of business is not in this State, but excludes a contractor whose ultimate parent company or majority owner has its principal place of business in this State.

b. The State of _____ _____ have a state statute giving
Bidder's resident state Does or Does Not
preference to resident bidders.

_____ _____
Signature Title

If the answer to 2.b is that your state does have a statute giving preference to resident bidders, then you must provide a copy and proceed to 3.

3. A copy of the State of _____ statute is attached.

_____ _____
Signature Title

_____
Date

END OF DOCUMENT

Document 00454

AFFIDAVIT OF NON-INTEREST

BEFORE ME, the undersigned authority, a Notary Public in and for the State of Texas, on this day personally appeared _____, who
Affiant

being by me duly sworn on his oath stated that he is _____, of
Title

_____,
Name of Firm

the firm named and referred to and in the foregoing; and that he knows of no officer, agent, or employee of the City of Houston being in any manner interested either directly or indirectly in such Contract.

_____
Affiant's Signature

SWORN AND SUBSCRIBED before me on _____.
Date

_____
Notary Public in and for the State of TEXAS

_____
Print or type name

My Commission Expires: _____
Expiration Date

END OF DOCUMENT

AFFIDAVIT OF OWNERSHIP OR CONTROL

ORIG. DEPT.: DEPARTMENT OF PUBLIC WORKS AND ENGINEERING **FILE/I.D. NO.:** M-000265-0002-4

INSTRUCTION: ENTITIES USING AN ASSUMED NAME SHOULD DISCLOSE SUCH FACT TO AVOID REJECTION OF THE AFFIDAVIT. THE FOLLOWING FORMAT IS RECOMMENDED: CORPORATE/LEGAL NAME DBA ASSUMED NAME.

STATE OF _____ §
§ **AFFIDAVIT OF OWNERSHIP OR CONTROL**
COUNTY OF _____ §

BEFORE ME, the undersigned authority, on this day personally appeared _____ [***FULL NAME***] (hereafter "Affiant"), _____ [***STATE TITLE/CAPACITY WITH CONTRACTING ENTITY***] of _____ [***CONTRACTING ENTITY'S CORPORATE/LEGAL NAME***] ("Contracting Entity"), who being by me duly sworn on oath stated as follows:

1. Affiant is authorized to give this affidavit and has personal knowledge of the facts and matters herein stated.

2. Contracting Entity seeks to do business with the City in connection with _____ [***DESCRIBE PROJECT OR MATTER***] which is expected to be in an amount that exceeds $50,000.

3. The following information is submitted in connection with the proposal, submission or bid of Contracting Entity in connection with the above described project or matter.

4. Contracting Entity is organized as a business entity as noted below (check box as applicable).

FOR PROFIT ENTITY:

[ ] SOLE PROPRIETORSHIP
[ ] CORPORATION
[ ] PARTNERSHIP
[ ] LIMITED PARTNERSHIP
[ ] JOINT VENTURE
[ ] LIMITED LIABILITY COMPANY
[ ] OTHER (Specify type in space below)

NON-PROFIT ENTITY:

[ ] NON-PROFIT CORPORATION
[ ] UNINCORPORATED ASSOCIATION

_____

_____

_____

5. The information shown below is true and correct for the Contracting Entity and all owners of 5% or more of the Contracting Entity and, where the Contracting Entity is a non-profit entity, the required information has been shown for each officer, *i.e.*, president, vice-president, secretary, treasurer, etc. ***[NOTE: IN ALL CASES, USE FULL NAMES, LOCAL BUSINESS AND RESIDENCE ADDRESSES AND TELEPHONE NUMBERS. DO NOT USE POST OFFICE BOXES FOR ANY ADDRESS. INCLUSION OF E-MAIL ADDRESSES IS OPTIONAL, BUT RECOMMENDED. ATTACH ADDITIONAL SHEETS AS NEEDED.]***

Contracting Entity

Name: _____

Business Address *[NO./STREET]* _____

[CITY/STATE/ZIP CODE] _____

Telephone Number (____)_____

Email Address *[OPTIONAL]* _____

Residence Address *[NO./STREET]* _____

[CITY/STATE/ZIP CODE] _____

Telephone Number (____)_____

Email Address *[OPTIONAL]* _____

5% Owner(s) or More (IF NONE, STATE "NONE.")

Name: _____

Business Address *[NO./STREET]* _____

[CITY/STATE/ZIP CODE] _____

Telephone Number (____)_____

Email Address *[OPTIONAL]* _____

Residence Address *[NO./STREET]* _____

[CITY/STATE/ZIP CODE] _____

Telephone Number (____)_____

Email Address *[OPTIONAL]* _____

6. *Optional Information*

Contracting Entity and/or _____ [***NAME OF OWNER OR NON-PROFIT OFFICER***] is actively protesting, challenging or appealing the accuracy and/or amount of taxes levied against _____ [***CONTRACTING ENTITY, OWNER OR NON-PROFIT OFFICER***] as follows:

Name of Debtor: _____

Tax Account Nos. _____

Case or File Nos. _____

Attorney/Agent Name _____

Attorney/Agent Phone No. (____)_____

Tax Years _____

Status of Appeal ***[DESCRIBE]*** _____

_____

_____

_____

Affiant certifies that he or she is duly authorized to submit the above information on behalf of the Contracting Entity, that Affiant is associated with the Contracting Entity in the capacity noted above and has personal knowledge of the accuracy of the information provided herein, and that the information provided herein is true and correct to the best of Affiant's knowledge and belief.

_____
Affiant

SWORN TO AND SUBSCRIBED before me this _____ day of _____, 20_____.

(Seal)

_____
Notary Public

NOTE:
This affidavit constitutes a **government record** as defined by Section 37.01 of the Texas Penal Code. Submission of a false government record is punishable as provided in Section 37.10 of the Texas Penal Code. Attach additional pages if needed to supply the required names and addresses.

Document 00457

Conflict of Interest Questionnaire

****

Print out latest version of CIQ form from website listed below:

****

Local Government Code Chapter 176 requires Bidders with the City of Houston ("City") to file a Conflict of Interest Questionnaire with the City Secretary of the City of Houston.

The Conflict of Interest Questionnaire is available for downloading on the Texas Ethics Commission's website at: http://www.ethics.state.tx.us/forms/CIQ.pdf. The completed Conflict of Interest Questionnaire will be posted on the City Secretary's website. Also you will find a list of the City Local Government Officers on the City Secretary's website.

For your convenience the CIQ form is attached as part of this document. Although the City has provided this document for the Bidders convenience, it is the Bidders responsibility to submit the latest version of the CIQ form as promulgated by the Texas Ethics Commission.

The Failure of any Bidder to comply with this law is a Class C misdemeanor.

END OF DOCUMENT

Document 00459

CONTRACTOR'S STATEMENT REGARDING PREVIOUS CONTRACTS SUBJECT TO EQUAL EMPLOYMENT OPPORTUNITY

Section 60-1.7(b) of the Regulations of the Secretary of Labor requires each bidder or prospective prime contractor and proposed subcontractor, where appropriate, to state in the bid or at the outset of negotiations for the contract whether it has participated in any previous contract or subcontract subject to the equal opportunity clause; and if so, whether it has filed with the Joint Reporting Committee, the Director, an agency, or the former President's Committee on Equal Employment Opportunity all reports due under the applicable filing requirements. In any case in which a bidder or prospective prime contractor or proposed subcontractor which participated in a previous contract subject to Executive Order 10925, 11114. or 11246 has not filed a report due under the applicable filing documents, no contract or subcontract shall be awarded unless such contractor submits a report covering the delinquent period or such other period specified by the FAA or the Director, OFCCP.

Contractor has __ has not __ participated in a previous contract subject to the equal opportunity clause prescribed by Executive Order 10925, or Executive Order 11114, or Executive Order 11246.

Contractor has __ has not __ submitted all compliance reports in connection with any such contract due under the applicable filing requirements; and that representations indicating submission of required compliance reports signed by proposed subcontractors will be obtained prior to award of subcontracts.

If Contractor has participated in a previous contract subject to the equal opportunity clause and has not submitted compliance reports due under applicable filing requirements, Contractor (Proposer) shall submit a compliance report on Standard Form 100, "Employee Information Report EEO-1" prior to the award of the Contract.

Standard Form 100 is normally furnished to contractors annually, based on a mailing list currently maintained by the Joint Reporting Committee. In the event Contractor has not received the form, Contractor may obtain it by writing to the following address:

Joint Reporting Committee
1800 G Street
Washington, DC 20506

_____
(Printed or typed Name of Signatory)

_____ _____
Signature Date

_____
Title

_____
Contractor's Firm Name

NOTE: The penalty for making false statements in offers is prescribed in 18 U.S.C. 1001.

END OF DOCUMENT

Document 00460
(POP -1)
City of Houston
Pay or Play Program
Acknowledgement Form

It has been determined that the project currently open for bidding meets the criteria of the City of Houston Pay or Play program. This form acknowledges your awareness of the Pay or Play program which is authorized by Ordinance 2007-534. Your signature below affirms that you will comply with the requirements of the program if you are the successful bidder/proposer, and ensure the same on behalf of subcontracts subject to the Pay or Play Program.

I declare under penalty of perjury under the laws of the State of Texas that if awarded this contract which meets the criteria for the City of Houston's Pay or Play Program, I will comply with all requirements of the Pay or Play Program in accordance with Executive Order 1-7.

***Fill out all information below and submit this form with your bid/proposal packet.**

_____
Solicitation Number

_____ _____
Signature Date

_____ _____
Print Name City Vendor ID

_____ _____
Company Name Phone Number

_____
Email Address

Note: For more information contact your POP Liaison or the POP Contract Administrator. All contact information can be found on www.houstontx.gov →Departments→Office of Business Opportunity→Pay or Play.

Document 00470

BIDDER'S MWSBE PARTICIPATION PLAN

The Bidder or Proposer shall submit this completed form with the bid, to demonstrate the Bidder/Proposer's plan to meet the contract-specific MWSBE goal ("contract goal"). If the Bidder or Proposer cannot meet the contract goal, the Bidder/Proposer has the burden to demonstrate "Good Faith Efforts", which shall include correctly and accurately preparing and submitting this form, a Record of Good Faith Efforts (Document 00471), a Request for Deviation from the Goal (Document 00472), and providing supporting documentation evidencing their "Good Faith Efforts", as required by the City of Houston's Good Faith Efforts Policy (Document 00808). The City will review the Participation Plan and Good Faith Efforts at the time of bid opening. Visit http://www.houstontx.gov/obo for more information.

City Contract Goal	MBE 11%	WBE 7%	• MBE and WBE Goals are two separate Contract Goals. • Any excess of one Goal cannot be applied to meet another Goal. • An SBE can be applied to the MBE and/or WBE Goal, but not to exceed 4%.

NAICS Code (6 digit)	Description of Work (Plan Sheet #, Unit Price #, Scope of Work #, as applicable)	% of Total Bid Price (2 decimal places; for example, 5.00%)	Cert. Type for Goal: MBE, WBE, or SBE	Certified Firm Name Firm Address Contact Name Phone No. and E-Mail
			MBE € WBE € SBE €	
			MBE € WBE € SBE €	
			MBE € WBE € SBE €	
			MBE € WBE € SBE €	
			MBE € WBE € SBE €	
			MBE € WBE € SBE €	
			MBE € WBE € SBE €	

Bidder's Participation Plan Total	MBE	WBE	SBE

Signature for Company: _____ *

Printed Name: _____

Company Name: _____

Phone #: _____

Date: _____

*I understand that supplying inaccurate information may violate Texas Penal Code Section 37.10 and lead to City sanctions.

Document 00470
CONTINUATION PAGE

NAICS Code (6 digit)	Description of Work (Plan Sheet #, Unit Price #, Scope of Work #, as applicable)	% of Total Bid Price (2 decimal places; for example, 5.00%)	Cert. Type for Goal MBE, WBE, or SBE	Certified Firm Name Firm Address Contact Name Phone No. and E-Mail
			MBE € WBE € SBE €	
			MBE € WBE € SBE €	
			MBE € WBE € SBE €	
			MBE € WBE € SBE €	
			MBE € WBE € SBE €	
			MBE € WBE € SBE €	
			MBE € WBE € SBE €	
			MBE € WBE € SBE €	
			MBE € WBE € SBE €	
			MBE € WBE € SBE €	
			MBE € WBE € SBE €	
			MBE € WBE € SBE €	

Signature for Company: _____* Date: _____

Print Name/Company Name:_____ Phone: _____

*I understand that supplying inaccurate information may violate Texas Penal Code Section 37.10 and lead to City sanctions.

Document 00471

PRE-BID GOOD FAITH EFFORTS

Bidder Name: _____ **Project Name**_____

A Bidder or Proposer that may be unable to complete or follow a Participation Plan (Document 00470) to meet the Contract Goal in the Supplemental Conditions (Document 00800), must submit this completed form, Goal Deviation Request Form (Document 00472), providing supporting documentation evidencing their "Good Faith Efforts", as required by the City of Houston's Good Faith Efforts Policy (see Document 00808).

The Bidder or Prime Contractor has the burden to demonstrate "Good Faith Efforts" to meet the MWSBE goal, which includes correctly and accurately preparing and submitting this form and other efforts described in the City's Good Faith Efforts Policy (Document 00808). The Office of Business Opportunity will review Good Faith Efforts and Participation Plan after selection of an apparent low bidder.

UNLESS THE BIDDER'S/PROPOSER'S PARTICIPATION PLAN MEETS THE CONTRACT GOAL, FAILURE TO SUBMIT THIS FORM MAY RESULT IN THE BID BEING FOUND NON-RESPONSIVE.

NAICS Code	Plan Item No.	MWSBE Type for Goal	Certified Firm Name Address, Phone No., and E-Mail	Certified Firm Contact Person	Methods of Contact	Prime Contact Dates	Certified Firm Response	Results of Contact (why suitable or not suitable for work)
		MBE € WBE € SBE €			Phone € E-mail € Fax €			
		MBE € WBE € SBE €			Phone € E-mail € Fax €			
		MBE € WBE € SBE €			Phone € E-mail € Fax €			
		MBE € WBE € SBE €			Phone € E-mail € Fax €			

Authorized Signature: _____ Date: _____ Phone: _____

Print Name: _____ Email Address: _____

Company Name: _____

CONTINUATION PAGE

NAICS Code	Plan Item No.	MWSBE Type for Goal	Certified Firm Name Address, Phone No., and E-Mail	Certified Firm Contact Person	Method of Contact	Prime Contact Dates	Certified Firm Response	Results of Contact (why suitable or not suitable for work)
		MBE € WBE € SBE €			Phone € E-mail € Fax €			
		MBE € WBE € SBE €			Phone € E-mail € Fax €			
		MBE € WBE € SBE €			Phone € E-mail € Fax €			
		MBE € WBE € SBE €			Phone € E-mail € Fax €			
		MBE € WBE € SBE €			Phone € E-mail € Fax €			
		MBE € WBE € SBE €			Phone € E-mail € Fax €			
		MBE € WBE € SBE €			Phone € E-mail € Fax €			

Authorized Signature: _____ Date: _____ Phone: _____

Print Name: _____ Email Address: _____

Company Name: _____

Document 00472
BIDDER'S MWSBE GOAL DEVIATION REQUEST

Company Name: _____

Project Name: _____

	MBE %	WBE %	Total %
Department Approved Contract Goals			

	MBE %	WBE %	SBE (Max 4% for Credit) %	Total %
Bidder's Proposed Participation Plan				

Justification: Please provide the reason the Bidder is unable to meet the Contract Goal in Document 00800.

_____

_____

_____

Good Faith Efforts: Please list any efforts not listed in the Bidder's Pre-Bid Good Faith Effort (Document 00471) and provide supporting documentation evidencing "Good Faith Efforts", as required by the City of Houston's Good Faith Efforts Policy (Document 808).

_____

_____

_____

_____

Date: _____ Company Name: _____
Email: _____ Company Representative: _____
Phone Number: _____ Title: _____

FOR OFFICIAL USE ONLY: Approved [ ] Not Approved [ ]

OBO Representative _____ Date: _____

_____ Title: _____

Document 00495

POST-BID PROCEDURES

1.0 DOCUMENT ADDRESSES

A. Notice of Intent to Award

B. Monitoring Authority/Contracting Department

C. Requirements of Bidder

D. Failure of Bidder to comply with requirements

E. Notice to Proceed

2.0 NOTICE OF INTENT TO AWARD

A. The City will provide written Notice of Intent to Award to Low Bidder.

3.0 DEFINITIONS

A. The "Monitoring Authority" or "OBO" for this Project is:

Director, Office of Business Opportunity Division
City of Houston
611 Walker Street, 7th Floor
Houston, Texas 77002

B. The "Contracting Department" for this Project is:
Director, Department of DEPARTMENT OF PUBLIC WORKS AND ENGINEERING
City of Houston
611 Walker Street
Houston, Texas 77002
ATTN: **Maher H. Saied, Sr. Project Manager,**

4.0 REQUIREMENTS OF BIDDER

A. Within10 days of receipt of Notice of Intent to Award, Low Bidder shall execute and deliver to Maher H. Saied, Sr. Project Manager, Project Manager and Monitoring Authority, for the City's approval, documents indicated by an "X" below:
[ ] Document 00570 – Revised MWSBE Participation Plan *(Do not submit if OBO Director approved Bidder's Plan – Document 00470)*

[X] Executed Subcontract(s), Letter(s) of Intent, or documentation of good faith efforts to meet the MWSBE goals

B. Within 10 days of receipt of Notice of Intent to Award, Low Bidder shall execute and deliver to Maher H. Saied, Sr. Project Manager, Project Manager for the City's approval, documents indicated by an "X" below:

[ ] Document 00500 - Form of Business
[X] Document 00501 - Resolution of Contractor
[X] Document 00520 - Agreement
[X] Document 00600 - List of Proposed Subcontractors and Suppliers
[X] Document 00601 - Drug Policy Compliance Agreement
[X] Document 00602 - Contractor's Drug-free Workplace Policy *(Contractor creates this document.)*
[X] Document 00604 - History of OSHA Actions and List of On-the-job Injuries
[X] Document 00605 - List of Safety Impact Positions *(Contractor completes this list. Do not submit if submitting Document 00606.)*
[ ] Document 00606 - Contractor's Certification of No Safety Impact Positions *(Do not submit if submitting Document 00605.)*
[ ] Document 00607 - Certification Regarding Debarment, Suspension, and Other Responsibility Matters
[ ] Document 00608 - Contractor's Certification Regarding Non-segregated Facilities for Project Funded by AIP Grant
[X] Document 00610 - Performance Bond
[X] Document 00611 - Statutory Payment Bond
[X] Document 00612 - One-year Maintenance Bond
[X] Document 00613 - One-year Surface Correction Bond
[X] Document 00620 - Affidavit of Insurance *(with Certificate of Insurance attached)*
[X] Document 00622 - Name and Qualifications of Proposed Superintendent *(Contractor creates this document.)*
[ ] Document 00623 - Contractor's Act of Assurance (SRF Form ED-103)
[X] Document 00624 - Affidavit of Compliance with S/WMBE Program
[ ] Document 00625 - SRF Participation Summary
[ ] Document 00626 - SRF Affirmative Steps Solicitation Report
[ ] Document 00627 - SRF Prime Contractor Affirmative Steps Certification and Goals
[ ] Document 00629 - Affidavit for FAA Form 7460-1
[X] Document 00630 - Certification of Compliance with Pay or Play Program
[X] Document 00631 - City of Houston Pay or Play Program – List of Subcontractors
[ ] Document 00809 – CDBG Requirements for Federally Funded Projects

C. Within 10 days of receipt of Notice of Intent to Award, Low Bidder shall execute the following forms and deliver them directly to the Monitoring Authority.

1. Original forms contained in Document 00805 – Equal Employment Opportunity Program Requirements:
   [X] Pages 00805-3 to 00805-5, Certification by Bidder Regarding Equal

Employment Opportunity

[X] Page 00805-6, Total Work Force Composition of the Company, or copy of latest EEO-1 form (required only if Contractor has a work force of 50 or more people and the Original Contract Price is $50,000 or more)

[X] Page 00805-7, Equal Employment Opportunity Compliance Program

[X] Page 00805-26, Certification by Proposed Subcontractor Regarding Equal Employment Opportunity

[X] Page 00805-29, Certification by Proposed Material Supplier, Lessor, and Professional Service Providers Regarding Equal Employment Opportunity

2. Original completed form Document 00633 - Certification by Proposed Material Suppliers, Lessors, and Professional Service Providers Regarding Equal Employment Opportunity, for each proposed material supplier and equipment supplier.

3. Original forms contained in Document 00820 – Wage Scale for Engineering Construction.

[X] *Certificate from Contractor Appointing Officer or Employee to Supervise Payment of Employees*

[ ] *Certificate from SubContractor Appointing Officer or Employee to Supervise Payment of Employees*

[ ] Document 00812, Exhibit "A" – Certificate from Contractor Appointing Officer or Employee to Supervise Payment of Employees

D. Designations of Subcontractors and Suppliers, who have been selected by Bidder in Document 00600 - List of Proposed Subcontractors and Suppliers, and accepted by the City, may be changed only with prior notice and acceptance by Project Manager as provided in Conditions of the Contract. For each Product Supplier subsequently added or substituted, provide an original completed form, Document 00633 - Certification by Proposed Material Suppliers, Lessors, and Professional Service Providers Regarding Equal Employment Opportunity, directly to the Monitoring Authority.

E. On Bidder's written request, Maher H. Saied, Sr. Project Manager, Project Manager may grant an extension of time, not to exceed 5 days, to furnish documents specified in Paragraphs 4.0.A and 4.0.B. If Bidder is required to resubmit documents specified in Paragraph 4.0.A or 4.0.B, Bidder shall do so within time limits provided in the request for resubmission.

F. Designations of Subcontractors and Suppliers, who have been selected by Bidder in its Participation Plan, and accepted by the City, may be changed only with prior notice and acceptance by the Monitoring Authority as provided in Document 00808 – Bidder/Contractor Requirements for the City of Houston Minority, Women, and Small Business Enterprise (MWSBE), and Persons with Disabilities Business Enterprise (PDBE).

5.0 FAILURE OF BIDDER TO COMPLY WITH REQUIREMENTS

A. Should Bidder, on receipt of Notice of Intent to Award, fail to comply with requirements of this Document 00495 within stated time, the City may declare award in default and require forfeiture of the Security Deposit.

B. After the City's written notice of default to Low Bidder, the City may award the Contract to Bidder whose offer is the next lowest bid, and Security Deposit of Bidder in default shall be forfeited to the City in accordance with provisions of Document 00200 - Instructions to Bidders.

6.0 NOTICE TO PROCEED

A. Upon the City's execution of the Agreement and delivery to Contractor, City Engineer will give Document 00551 - Notice to Proceed to Contractor, which establishes Date of Commencement of the Work.

END OF DOCUMENT

Document 00500

FORM OF BUSINESS

Please mark the box describing your firm's form of business, fill in the requested information, and include the relevant attachments.

[ ] **Corporation**
Corporate Name: _____
State of Incorporation: _____
Mailing Address: _____,
Type of Corporation: _____

Certificate of Assumed Name, if operating under a name different than that on the corporate charter (the Certificate must have been issued within the past 10 years to be valid)

*Certificate of Good Standing

*Certificate of Existence (if non-Texas corporation, Certificate of Authority)

[ ] **Partnership/Joint Venture**
Partnership/Joint Venture Name: _____
Mailing Address: _____,
Type of Partnership/Joint Venture:

Copy of the Partnership or Joint Venture Agreement, **or**
Affidavit with the name of the partnership or joint venture, the names of the individual partners or participants in the joint venture, and a statement that the partnership or joint venture is in existence

Certificate of Assumed Name, (the Certificate must have been issued within the past 10 years to be valid)

If firm is a limited partnership, the Certificate of Limited Partnership

If any partner or joint venturer is a corporation, the above information relating to corporation must be included as to each sum partner or joint venturer.

[ ] **Sole Proprietorship**

Name: _____
Mailing Address: _____

Certificate of Assumed Name, if operating under a name different than that of the sole proprietor (the Certificate must have been issued within the past 10 years to be valid)

** Must be furnished upon request of the Director and must be less than 90 days old.*

END OF DOCUMENT

Document 00501

RESOLUTION OF CONTRACTOR

_____ ("Contractor"),
(Name of Contractor, e.g., "Biz. Inc.", "Biz LLP")

is a _____,
(Type of Organization, e.g.: Corporation, Limited Partnership, Limited Liability Partnership, Limited Liability Company, etc.)

which is bound by acts of _____,
(Name and Form of Governing Entity, e.g., "Biz Inc. Board of Directors", "Bill Smith, GP", etc.)

("Governing Entity").

On the _____ day of _____, 20___, the Governing Entity resolved, in accordance with all documents, rules, and laws applicable to the Contractor, that

_____, is authorized to act as the
(Contractor's Representative)

Contractor's Representative in all business transactions (initial one) ____ conducted in the State of Texas OR ____ related to this Contract; and

The Governing Entity warrants that the above resolution (a) was entered into without dissent or reservation by the Governing Entity, (b) has not been rescinded or amended, and (c) is now in full force and effect; and

In authentication of the adoption of this resolution, I subscribe my name on this day of _____, 20___.

_____ _____
(Authorized Signature for Governing Entity) (Print or Type Name and Title of Authorized Signatory)

SWORN AND SUBSCRIBED before me on _____
Date

_____
Notary Public in and for the State of Texas

My Commission Expires: _____ _____
Expiration Date Print or Type Name of Notary Public

Document 00520

AGREEMENT

Project: Rampart Street (Sub-Project 2) Drainage and Paving System Improvements

Project Location: Rampart Street from Bissonnet Street to Clarewood Drive; Clarewood Drive from Rampart Street to Mullins Drive; Mullins Drive from Clarewood Drive to End of Roadway North of the Mullins and High Star Drive intersection.(Key Map No. 531J and 531E)

Project No: WBS No. M-000265-0002-4

The City: THE CITY OF HOUSTON, 900 Bagby Street, Houston, Texas 77002 (the "City")

and

Contractor: _____

(Address for Written Notice) _____

_____

_____

Fax Number: _____ **Phone Number:** _____

City Engineer, with respect to Sections 4.3 thru 4.5 of the General Conditions, is:

J. Timothy Lincoln, P.E. (or his successor)

P. O. Box 1562, Houston, Texas 77251-1562 (Address for Written Notice)

City Engineer, with respect to all other terms of the General Conditions, is:

Joseph T. Myers, P.E. (or his successor)

Fax Number: (832) 395-2410

THE CITY AND CONTRACTOR AGREE AS FOLLOWS:

ARTICLE 1
THE WORK OF THE CONTRACT

1.1 Contractor shall perform the Work in accordance with the Contract.

ARTICLE 2
CONTRACT TIME

2.1 Contractor shall achieve Date of Substantial Completion within **460** days after Date of Commencement of the Work, subject to adjustments of Contract Time as provided in the Contract.

2.2 The Parties recognize that time is of the essence for this Agreement and that the City will suffer financial loss if the Work is not completed within the Contract Time. Parties also recognize delays, expense, and difficulties involved in proving in a legal or arbitration proceeding actual loss suffered by the City if the Work is not completed on time. Accordingly, instead of requiring any such proof, the Parties agree that as liquidated damages for delay (but not as a penalty), Contractor shall pay the City the amount stipulated in Document 00800 – Supplementary Conditions, for each day beyond Contract Time.

ARTICLE 3
CONTRACT PRICE

3.1 Subject to terms of the Contract, the City will pay Contractor in current funds for Contractor's performance of the Contract, Contract Price of $__ which includes Alternates, if any, accepted below.

3.2 The City accepts Alternates as follows:

Alternate No. 1 N/A
Alternate No. 2 N/A
Alternate No. 3 N/A
Alternate No. 4 N/A

ARTICLE 4
PAYMENTS

4.1 The City will make progress payments to Contractor as provided below and in Conditions of the Contract.

4.2 The Period covered by each progress payment is one calendar month ending on the 15th of the month.

4.3 The City will issue Certificates for Payment and will make progress payments on the basis of such Certificates as provided in Conditions of the Contract.

4.4 Final payment, constituting entire unpaid balance of Contract Price, will be made by the City to Contractor as provided in Conditions of the Contract.

ARTICLE 5
CONTRACTOR REPRESENTATIONS

5.1 Contractor represents:

5.1.1 Contractor has examined and carefully studied Contract documents and other related data identified in Request For or Competitive Sealed Proposals or Competitive Sealed Bids.

5.1.2 Contractor has visited the site and become familiar with and is satisfied as to general, local, and site conditions that may affect cost, progress, and performance of the Work.

5.1.3 Contractor is familiar with and is satisfied as to all federal, state, and local laws and regulations that may affect cost, progress, and performance of the Work.

5.1.4 Contractor has carefully studied all: (1) reports of explorations and tests of subsurface conditions at or contiguous to the site and all drawings of physical conditions in or relating to existing surface or subsurface

structures at or contiguous to the site (except Underground Facilities) which have been identified in Contract documents and (2) reports and drawings of a hazardous environmental condition, if any, at the site which has been identified in Contract documents.

5.1.5 Contractor has obtained and carefully studied (or assumes responsibility for having done so) all additional or supplementary examinations, investigations, explorations, tests, studies, and data concerning conditions (surface, subsurface, and Underground Facilities) at or contiguous to the site which may affect cost, progress, or performance of the Work or which relate to any aspect of the means, methods, techniques, sequences, and procedures of construction to be employed by Contractor, including applying specific means, methods, techniques, sequences, and procedures of construction, if any, expressly required by the Contract to be employed by Contractor, and safety precautions and programs incident thereto

5.1.6 Contractor does not consider that any further examinations, investigations, explorations, tests, studies, or data are necessary for performance of the Work at Contract Price, within Contract Time, and in accordance with the Contract.

5.1.7 Contractor is aware of general nature of work to be performed by the City and others at the site that relates to the Work as indicated in Contract documents.

5.1.8 Contractor has correlated information known to Contractor, information and observations obtained from visits to the site, reports and drawings identified in the Contract, and all additional examinations, investigations, explorations, tests, studies, and data with the Contract.

5.1.9 Contractor has given City Engineer written notice of all conflicts, errors, ambiguities, or discrepancies that Contractor has discovered in the Contract, and written resolution thereof by City Engineer is acceptable to Contractor.

5.1.10 Contract documents are generally sufficient to indicate and convey understanding of all terms and conditions for performance and furnishing of the Work.

ARTICLE 6
MISCELLANEOUS PROVISIONS

6.1 The Contract may be terminated by either Party as provided in Conditions of the Contract.

6.2 The Work may be suspended by the City as provided in Conditions of the Contract.

ARTICLE 7
ENUMERATION OF CONTRACT DOCUMENTS

7.1 The following documents are incorporated into this Agreement:

7.1.1 Document 00700 - General Conditions.

7.1.2 Document 00800 - Supplementary Conditions.

7.1.3 Division 01 - General Requirements.

7.1.4 Divisions 02 through 16 of Specifications.

7.1.5 Drawings listed in Document 00015 - List of Drawings. Drawing No. 54819 and bound separately.

7.1.6 Addenda which apply to the Contract, are as follows:

Addendum No. 1, dated None

Addendum No. 2, dated None

Addendum No. 3, dated None

Rider No. [___], dated None

7.1.7 Other documents:

	Document No.	Title
[X]	00410B	Bid Form – Part B
[X]	00470	Standard Pre-Bid Participation Plan Document
[ ]	00471	Pre-Bid Good Faith Efforts Report
[ ]	00472	Goal Deviation Request
[ ]	00500	Form of Business
[X]	00501	Resolution of Contractor (if a corporation)
[ ]	00570	Amended S/MWBE Participation Plan
[ ]	00571	Contractor's Good Faith Efforts Report
[ ]	00572	Plan Deviation Request
[ ]	00608	Contractor's Certification Regarding Non-Segregated Facilities for Project Funded by AIP Grant
[X]	00610	Performance Bond
[X]	00611	Statutory Payment Bond
[X]	00612	One-year Maintenance Bond
[ ]	00613	One-year Surface Correction Bond
[X]	00620	Affidavit of Insurance (with the Certificate of Insurance attached)
[ ]	00623	Contractor's Act of Assurance (SRF Form ED-103)
[X]	00624	Affidavit of Compliance with Affirmative Action Program
[ ]	00628	Affidavit of Compliance with Disadvantaged Business Enterprise (DBE) Program for Project Funded By AIP Grant
[X]	00630	(POP-2) Certification of Compliance with Pay or Play Program
[X]	00631	(POP-3) City of Houston Pay or Play Program – List of Subcontractors
[X]	00800	Supplementary Conditions for Project CIP or AIP Funded
[ ]	00801	Supplementary Conditions for Project AIP Funded
[ ]	00802	SRF Supplementary Conditions
[X]	00805	Equal Employment Opportunity Program Requirements
[ ]	00806	EPA DBE and Wage Rate Requirements (SRF only)
[ ]	00807	Bidder/Contractor Requirements for DBE Program
[X]	00808	Minority and Women-owned Business Enterprise (MWBE) & Persons with Disabilities Business Enterprise (PDBE) Program
[ ]	00810	Federal Wage Rate - Highway
[ ]	00811	Federal Wage Rate - Building
[ ]	00812	Federal Wage Rate - Heavy
[X]	00820	Wage Rate for Engineering Construction
[ ]	00821	Wage Rate for Building Construction
[X]	00830	Trench Safety Geotechnical Information
[X]	00840	Pay or Play Program
[ ]	00912	Rider

ARTICLE 8
SIGNATURES

8.1 This Agreement is executed in two original copies and is effective as of the date of countersignature by City Controller.

CONTRACTOR:

By: _____
Name: _____
Title: _____
Date: _____
Tax Identification Number: _____

(If Joint Venture)

By: _____
Name: _____
Title: _____
Date: _____
Tax Identification Number: _____

CITY OF HOUSTON, TEXAS

APPROVED:

By: _____
Director,
Department of Public Works and Engineering

SIGNED:

By: _____
Mayor

COUNTERSIGNED:

By: _____
City Controller

Date Countersigned:

_____

ATTEST/SEAL:

By: _____
City Secretary

8.2 This Contract and Ordinance have been reviewed as to form by the undersigned legal assistant and have been found to meet established Legal Department criteria. Legal Department has not reviewed the content of these documents.

_____ _____
Legal Assistant Date

END OF DOCUMENT

Document 00570

CONTRACTOR'S REVISED MWSBE PARTICIPATION PLAN

As soon as the Contractor becomes aware that the Contractor may not abide by the most current approved Plan, the Contractor shall submit this completed form with a Record of Post-Bid Good Faith Efforts (Document 00571), a Request for Plan Deviation (Document 00572), and any other document evidencing "Good Faith Efforts", as required by the Good Faith Efforts Policy (Document 00808). The City will review this Revised Participation Plan and may approve this Revised Plan if the Contractor has made Good Faith Efforts. For more information, visit http://www.houstontx.gov/obo.

Original Participation Plan Percentage	MBE	WBE	SBE	Revised Participation Plan Percentage	MBE	WBE	SBE

NAICS Code (6 digit)	Description of Work (Plan Sheet #, Unit Price #, Scope of Work #, as applicable)	% of Total Bid Price (2 decimal places)	Cert. Type for Goal (MBE, WBE, SBE)	Certified Firm Name Firm Address Contact Name Phone No. and E-Mail (if available)

Signature for Company: _____* Date: _____
Print Name: _____ Phone: _____

*I understand that supplying inaccurate information may violate Texas Penal Code Section 37.10 and lead to City sanctions.

Document 00570

CONTINUATION PAGE

NAICS Code (6 digit)	Plan Item Number (if applicable)/ Description of Work	% of Total Bid Price (2 decimal places)	Cert. Type for Goal (MBE, WBE, SBE)	Certified Firm Name Firm Address Contact Name Phone No. and E-Mail (if available)

Signature for Company: _____* Date: _____
Print Name: _____ Phone: _____

*I understand that supplying inaccurate information may violate Texas Penal Code Section 37.10 and lead to City sanctions.

Document 00571

RECORD OF POST-AWARD GOOD FAITH EFFORTS

Contractor Name: _____ **Project Name:** _____

A Contractor that may be unable to follow an agreed Participation Plan (Document 00470 or 00570) must submit this completed form, a Plan Deviation Request Form (Document 00572), and any other documentation of "Good Faith Efforts" (see Document 00808) that the OBO Representative may require. The Contractor shall submit one completed Document 00571 (Part A) for each Certified Firm that is no longer performing part or all of its work duties under the Approved Plan. The Contractor has the burden to demonstrate "Good Faith Efforts" to meet the MWSBE goal, which includes correctly and accurately preparing and submitting this form and other efforts described in the Good Faith Efforts Policy (Document 00808). The Office of Business Opportunity may review Participation Plan and Good Faith Efforts from time to time and may request that the Contractor submit this form and other information.

UNLESS THE CONTRACTOR MEETS THE GOALS IN THE AGREED PARTICIPATION PLAN, FAILURE TO SUBMIT THIS FORM MAY RESULT IN A DEFAULT OF THE CONTRACT.

PART A (REASON FOR NON-USE OF CERTIFIED FIRM IN AGREED PLAN)

NAICS Code	Plan Item No.	MWSBE Type for Goal	Certified Firm Name, Address, Phone No. and E-mail	Plan Goal & Actual Use (in % of total)	Method of Contact	Reason for Non-Use (why the Contractor was not able to use the Certified Firm in accordance with the Agreed Plan)
				Plan %: ____ Actual %: ____	Phone € E-mail € Fax €	

PART B (REASON FOR NONUSE OF REPLACEMENT CERTIFIED FIRMS—IF APPLICABLE)

NAICS Code	Plan Item No.	MWSBE Type for Goal	Certified Firm Name Address, Phone No. and E-Mail	Certified Firm Contact Person	Method of Contact	Prime Contact Date	Certified Firm Response	Results of Contact (why Certified Firm was unsuitable or unusable)
					Phone € E-mail € Fax €			
					Phone € E-mail € Fax €			

Authorized Signature: _____ Date: _____ Phone: _____

Print Name: _____ Email Address: _____

Document 00571

PART B CONTINUATION (REASON FOR NONUSE OF REPLACEMENT CERTIFIED FIRMS)

NAICS Code	Plan Item No.	MWSBE Type for Goal	Certified Firm Name Address, Phone No. and E-Mail	Certified Firm Contact Person	Method of Contact	Prime Contact Date	Certified Firm Response	Results of Contact (why Certified Firm was unsuitable or unusable)
					Phone € E-mail € Fax €			
					Phone € E-mail € Fax €			
					Phone € E-mail € Fax €			
					Phone € E-mail € Fax €			
					Phone € E-mail € Fax €			
					Phone € E-mail € Fax €			
					Phone € E-mail € Fax €			
					Phone € E-mail € Fax €			

Authorized Signature: _____ Date: _____ Phone: _____

Print Name: _____ Email Address: _____

Document 00572

CONTRACTOR'S REQUEST FOR PLAN DEVIATION

Contractor Name:_____

Project Name:_____

	MBE	WBE	SBE	Total
Approved Participation Plan Percentages	%	%	%	%

	MBE	WBE	SBE	Total
Contractor's Requested Participation Plan	%	%	%	%

Justification: Please provide the reason the Contractor is unable to meet the MWSBE goal in the Approved Plan.

_____

_____

_____

Good Faith Efforts: Please list any efforts not listed in Contractor's Record of Good Faith Effort (Document 00571).

_____

_____

_____

_____

Please attach additional pages if the space for Justification or Good Faith Efforts is insufficient.

Date:_____ *Contractor:_____

E-mail: _____ *By:_____

Phone Number:_____ Title:_____

*I understand that the approval of this deviation request does not constitute a final decision by OBO that Contractor has used Good Faith Efforts in meeting the Contracting Goal.

FOR OFFICIAL USE ONLY: Approved ☐ Not Approved ☐

OBO Representative Date:_____

_____ Title: _____

Document 00600

LIST OF PROPOSED SUBCONTRACTORS AND SUPPLIERS

PROJECT NAME: Rampart Street (Sub-Project 2) Drainage and Paving
TOTAL DBE AWARD: $ _____
ORIG. CONTRACT PRICE: $_____ TOTAL MWSBE AWARD: $ _____
PROJECT NO.: WBS No. M-000265-0002-4 TOTAL HUB AWARD: $ _____
DATE OF REPORT: _____ TOTAL PDBE AWARD: $ _____

NAICS (6 digits)	SUBCONTRACTOR OR SUPPLIER (INCLUDE "MWSBE", "PDBE", "DBE", OR "HUB" DESIGNATION)[2]	ADDRESS	SCOPE OF WORK[3]

NOTES:
1. RETURN FOR ALL PROJECTS AS REQUIRED IN DOCUMENT 00800 – SUPPLEMENTARY CONDITIONS. RETURN WITHIN THE SPECIFIED NUMBER OF DAYS AFTER RECEIPT OF NOTICE OF INTENT TO AWARD
2. DESIGNATE FIRMS CERTIFIED BY THE CITY OFFICE OF BUSINESS OPPORTUNITY ON THIS FORM.
3. DESCRIBE THE WORK TO BE PERFORMED, FOR WHICH THE FIRM IS CERTIFIED, SUCH AS "PAVING", "ELECTRICAL", ETC.
4. **CONTRACTOR SHALL EXECUTE CONTRACTS WITH APPROVED SUBCONTRACTORS AND SUPPLIERS WITHIN 30 DAYS AFTER THE DATE OF THE NOTICE TO PROCEED. COPIES OF CONTRACTS WITH DESIGNNATED FIRMS MUST BE SENT TO THE OFFICE OF BUSINESS OPPORTUNITY.**

SIGNATURE: _____ COMPANY NAME: _____

NAME: _____ TITLE: _____
(Type or Print)

LIST OF PROPOSED SUBCONTRACTORS AND SUPPLIERS

Document 00600

Continuation Page

PROJECT NAME: Rampart Street (Sub-Project 2) Drainage and Paving
DATE OF REPORT: _____
PROJECT NO.: WBS No. M-000265-0002-4

NAICS (6 digits)	SUBCONTRACTOR OR SUPPLIER (INCLUDE "MWSBE", "PDBE", "DBE", OR "HUB" DESIGNATION)[2]	ADDRESS	SCOPE OF WORK[3]

SIGNATURE: _____ COMPANY NAME: _____

NAME: _____ TITLE: _____
(Type or Print)

END OF DOCUMENT

Document 00601

DRUG POLICY COMPLIANCE AGREEMENT

I, _____ _____,
Name Title

of _____
Contractor

have authority to bind Contractor with respect to its Bid, Proposal, or performance of any and all contracts it may enter into with the City of Houston; and that by making this Agreement, I affirm that Contractor is aware of and by the time the Contract is awarded will be bound by and agree to designate appropriate safety impact positions for company employee positions, and to comply with the following requirements before the City issues a Notice to Proceed:

1. Develop and implement a written Drug Free Workplace Policy and related drug testing procedures for Contractor that meet the criteria and requirements established by the Mayor's Amended Policy on Drug Detection and Deterrence (Mayor's Drug Policy) and the Mayor's Drug Detection and Deterrence Procedures for Contractors (Executive Order No. 1-31).

2. Obtain a facility to collect urine samples consistent with Health and Human Services (HHS) guidelines and an HHS-certified drug-testing laboratory to perform drug tests.

3. Monitor and keep records of drug tests given and results; and upon request from the City of Houston, provide confirmation of such testing and results.

4. Submit semi-annual Drug Policy Compliance Declarations.

I affirm on behalf of Contractor that full compliance with the Mayor's Drug Policy and Executive Order No. 1-31 is a material condition of the Contract with the City of Houston,

I further acknowledge that falsification, failure to comply with or failure to timely submit declarations or documentation in compliance with the Mayor's Drug Policy or Executive Order No. 1-31 will be considered a breach of the Contract with the City and may result in non-award or termination of the Contract by the City.

_____ _____
Contractor Title

_____ _____
Signature Date

END OF DOCUMENT

Document 00603

CHECKLIST FOR DRUG POLICY SUBMITTAL

TO: **CARLOS MARTINEZ**
PWE/DIRECTOR'S OFFICE
SECURITY MANAGEMENT SECTION
611 WALKER STREET
3RD FLOOR ANNEX
HOUSTON, TEXAS 77002

FROM: **MANAGING ENGINEER**
ENGINEERING & CONSTRUCTION DIVISION
STORM WATER ENGINEERING SECTION

DATE: _____

CONTRACTOR: _____

PROJECT NAME: _____

PROJECT No.: _____

PROJECT MANAGER: _____ **TELEPHONE:** _____ **FAX:** _____

DOCUMENTS CHECKED BELOW ARE BEING SUBMITTED: (Project Manager, check.)

- ☐ **DOC. 00601 - DRUG POLICY COMPLIANCE AGREEMENT (Standard Form)**
- ☐ **DOC. 00602 - CONTRACTOR'S DRUG-FREE WORKPLACE POLICY (Contractor creates this Document)**
- ☐ **DOC. 00605 - LIST OF SAFETY IMPACT POSITIONS (Contractor creates this List)**
  "OR"
- ☐ **DOC. 00606 - CONTRACTOR'S CERTIFICATION OF NO SAFETY IMPACT POSITIONS**

CCODT REVIEW: THE FOLLOWING CHECKED ITEM(S) ARE MISSING FROM SUBMISSION/POLICY AND NEED TO BE CORRECTED PRIOR TO AWARD:

- ☐ **NAME OF DRUG TESTING LAB**
  REASON FOR TESTING:
  - ☐ **RANDOM TESTING - 25% ANNUALLY**
  - ☐ **REASONABLE SUSPICION**
  - ☐ **POST ACCIDENT**
- ☐ **SAFETY IMPACT POSITIONS INCOMPLETE**
- ☐ **EMPLOYEE ACKNOWLEDGMENT FORM**
- ☐ **DRUG TESTING PROCEDURES**
- ☐ **CONSEQUENCE OF POSITIVE TEST:** *PERMANENTLY REMOVED FROM ANY CONTRACT CITY WORKSITE.*
- ☐ **CONSEQUENCE OF REFUSAL TO CONSENT:** *PERMANENTLY REMOVED FROM ANY CONTRACT CITY WORKSITE.*
- ☐ **OTHER:** _____

REJECTED	_____
	_____
	_____
APPROVED	_____

COMMENTS: _____

DATE RECEIVED: _____ **RESUBMITTAL DATE:** _____

END OF DOCUMENT

Document 00604

HISTORY OF OSHA ACTIONS AND LIST OF ON-THE-JOB INJURIES

Prior to award of the Contract, Low Bidder will be required to file the following with the City:

1. A history of all OSHA actions, advisories, etc., Contractor has received on all jobs worked in any capacity, prime or subcontractor. The history shall be for the two-year period preceding the Bid Date of the Project.

2. A list of all on-the-job injuries, accidents, and fatalities suffered by any present or former employees of Contractor during the same two-year period.

3. If less than the two-year period, give the date Contractor started doing business.

This information must be submitted to the City within the time period stated in Document 00498 - Notice of Intent to Award. An officer of the company must certify in a notarized statement that the information submitted is true and correct.

END OF DOCUMENT

Document 00605

LIST OF SAFETY IMPACT POSITIONS

****

Contractor is to provide a complete List of Employee Classifications that are considered in a "Safety Impact Position" and the number of employees in each of those classifications.

****

Employee Classification	**Number of Employees**

END OF DOCUMENT

Document 00606

CONTRACTOR'S CERTIFICATION OF NO SAFETY IMPACT POSITIONS IN PERFORMANCE OF A CITY CONTRACT

BEFORE ME, the undersigned authority, on this day personally appeared

_____,
Affiant

who being by me duly sworn on his oath stated that he is _____
Title

of _____
Contractor

and that no employee safety impact positions, as defined in §5.17 of Executive Order No. 1-31, will be involved in performing _____.
Project

Contractor agrees and covenants that it shall immediately notify the City of Houston Director of Personnel if any safety impact positions are established to provide services in performing this City Contract.

_____
Affiant's Signature

SWORN AND SUBSCRIBED before me on this day of _____, 20__.

_____
Notary Public in and for the State of TEXAS

_____
Print or Type Notary Public Name

My Commission Expires: _____
Expiration Date

END OF DOCUMENT

Document 00607

CERTIFICATION REGARDING DEBARMENT, SUSPENSION, AND OTHER RESPONSIBILITY MATTERS

Contractor certifies to the best of its knowledge and belief that it and its principals:

1. Are not presently debarred, suspended, proposed for debarment, declared ineligible, or voluntarily excluded from covered transactions by any Federal, State, or local department or agency;

2. Have not within a three-year period preceding this proposal been convicted of or had a civil judgment rendered against them for commission of fraud or a criminal offense in connection with obtaining, attempting to obtain, or performing a public (Federal, State, or local) transaction or contract under a public transaction: violation of Federal or State antitrust statutes or commission of embezzlement, theft, forgery, bribery, falsification or destruction of records, making false statements, or receiving stolen property;

3. Are not presently indicted for or otherwise criminally or civilly charged by a government entity (Federal, State, or local) with commission of any of the offenses enumerated in paragraph 2 of this certification; and

4. Have not within a three-year period preceding this application/proposal had one or more public transactions (Federal, State, or local) terminated for cause or default.

I understand that a false statement on this certification may be grounds for rejection of this proposal or termination of the award. In addition, under 18 USC Section 1001, a false statement may result in a fine of up to $10,000 or imprisonment for up to five years, or both.

Company:

_____
Typed Name & Title of Authorized Representative

_____ _____
Signature of Authorized Representative Date

☐ I am unable to certify the above statements. My explanation is attached.

END OF DOCUMENT

Document 00610

PERFORMANCE BOND

THAT WE, _____, as Principal, (the "Contractor"), and the other subscriber hereto, _____, as Surety, do hereby acknowledge ourselves to be held and firmly bound to the City of Houston (the "City"), a municipal corporation, in the penal sum of $_____ for the payment of which sum, well and truly to be made to the City, its successors and assigns, Contractor and Surety do bind themselves, their heirs, executors, administrators, successors and assigns, jointly and severally.

THE CONDITIONS OF THIS OBLIGATION ARE SUCH THAT:

WHEREAS, the Contractor has on or about this day executed a Contract in writing with the City for _____

_____,

all of such work to be done as set out in full in said Contract documents therein referred to and adopted by the City Council, all of which are made a part of this instrument as fully and completely as if set out in full herein.

NOW THEREFORE, if the said Contractor shall faithfully and strictly perform the Contract in all its terms, provisions, and stipulations in accordance with its true meaning and effect, and in accordance with the Contract documents referred to therein and shall comply strictly with each and every provision of the Contract and with this Bond, then this obligation shall become null and void and shall have no further force and effect; otherwise the same is to remain in full force and effect. Should the Contractor fail to faithfully and strictly perform the Contract in all its terms, including but not limited to the indemnifications thereunder, the Surety shall be liable for all damages, losses, expenses and liabilities that the City may suffer in consequence thereof, as more fully set forth herein.

It is further understood and agreed that the Surety does hereby relieve the City or its representatives from the exercise of any diligence whatever in securing compliance on the part of the Contractor with the terms of the Contract, and the Surety agrees that it shall be bound to take notice of and shall be held to have knowledge of all acts or omissions of the Contractor in all matters pertaining to the Contract. The Surety understands and agrees that the provision in the Contract that the City will retain certain amounts due the Contractor until the expiration of 30 days from the acceptance of the Work is intended for the City's benefit, and the City will have the right to pay or withhold such retained amounts or any other amount owing under the Contract without changing or affecting the liability of the Surety hereon in any degree.

It is further expressly agreed by Surety that the City or its representatives are at liberty at any time, without notice to the Surety, to make any change in the Contract documents and in the Work to be done thereunder, as provided in the Contract, and in the terms and conditions thereof, or to make any change in, addition to, or deduction from the Work to be done thereunder; and that such changes, if made, shall not in any way vitiate the obligation in this Bond and undertaking or release the Surety therefrom.

It is further expressly agreed and understood that the Contractor and Surety will fully indemnify and save harmless the City from any liability, loss, cost, expense, or damage arising out of Contractor's performance of the Contract.

If the City gives Surety notice of Contractor's default, Surety shall, within 45 days, take one of the following actions:

1. Arrange for Contractor, with consent of the City, to perform and complete the Contract; or

2. Take over and assume completion of the Contract itself, through its agents or through independent contractors, and become entitled to the payment of the balance of the Contract Price.

If the Surety fails to take either of the actions set out above, it shall be deemed to have waived its right to perform and complete the Contract and receive payment of the balance of the Contract Price and the City shall be entitled to enforce any remedies available at law, including but not limited to completing the Contract itself and recovering any cost in excess of the Original Contract Price from the Surety.

This Bond and all obligations created hereunder shall be performable in Harris County, Texas. This Bond is given in compliance with the provisions of Chapter 2253, Texas Government Code, as amended, which is incorporated herein by this reference.

Notices required or permitted hereunder shall be in writing and shall be deemed delivered when actually received or, if earlier, on the third day following deposit in a United States Postal Service post office or receptacle, with proper postage affixed (certified mail, return receipt requested), addressed to the respective other Party at the address prescribed in the Contract documents, or at such other address as the receiving party may hereafter prescribe by written notice to the sending party.

IN WITNESS THEREOF, the said Contractor and Surety have signed and sealed this instrument on the respective dates written below their signatures and have attached current Power of Attorney.

ATTEST, SEAL: (if a corporation)
WITNESS: (if not a corporation)

_____
Name of Contractor

By: _____
Name:
Title:

By: _____
Name:
Title:
Date:

ATTEST/SURETY WITNESS:

(SEAL)

_____
Full Name of Surety

_____
Address of Surety for Notice

_____

_____
Telephone Number of Surety

By: _____
Name:
Title:
Date:

By: _____
Name:
Title: Attorney-in-Fact
Date:

This Ordinance or Contract has been reviewed as to form by the undersigned legal assistant and have been found to meet established Legal Department criteria. The Legal Department has not reviewed the content of these documents.

_____ _____
Legal Assistant Date

END OF DOCUMENT

Document 00611

STATUTORY PAYMENT BOND

THAT WE, _____, as Principal, hereinafter called Contractor and the other subscriber hereto, _____, as Surety, do hereby acknowledge ourselves to be held and firmly bound unto the City of Houston, a municipal corporation, in the sum of $_____ for the payment of which sum, well and truly to be made to the City of Houston, and its successors, the said Contractor and Surety do bind themselves, their heirs, executors, administrators, successors, jointly and severally.

THE CONDITIONS OF THIS OBLIGATION ARE SUCH THAT:

WHEREAS, the Contractor has on or about this day executed a contract in writing with the City of Houston for _____
_____,
all of such work to be done as set out in full in said Contract documents therein referred to and adopted by the City Council, all of which are made a part of this instrument as fully and completely as if set out in full herein;

NOW, THEREFORE, if the said Contractor shall pay all claimants supplying labor and materials to him or a Subcontractor in the prosecution of the Work provided for in the Contract, then, this obligation shall be void; otherwise the same is to remain in full force and effect;

PROVIDED HOWEVER, that this Bond is executed pursuant to the provisions of Chapter 2253, Texas Government Code, as amended, and all liabilities on this Bond shall be determined in accordance with the provisions of said Article to the same extent as if it were copied at length herein.

IN WITNESS THEREOF, the said Contractor and Surety have signed and sealed this instrument on the respective dates written below their signatures and have attached current Power of Attorney.

ATTEST, SEAL: (if a corporation)
WITNESS: (if not a corporation)

_____
Name of Contractor

By: _____
Name:
Title:

By: _____
Name:
Title:
Date:

ATTEST/SURETY WITNESS:

(SEAL)

_____
Full Name of Surety

_____
Address of Surety for Notice

_____

_____
Telephone Number of Surety

By: _____
Name:
Title:
Date:

By: _____
Name:
Title: Attorney-in-Fact
Date:

This Ordinance or Contract has been reviewed as to form by the undersigned legal assistant and have been found to meet established Legal Department criteria. The Legal Department has not reviewed the content of these documents.

_____
Legal Assistant

_____
Date

END OF DOCUMENT

Document 00612

ONE-YEAR MAINTENANCE BOND

THAT WE, _____, as Principal, hereinafter called Contractor, and the other subscriber hereto, _____, as Surety, do hereby acknowledge ourselves to be held and firmly bound to the City of Houston, a municipal corporation, in the sum of $_____, for the payment of which sum well and truly to be made to the City of Houston and its successors, the said Contractor and Surety do bind themselves, their heirs, executors, administrators, successors, jointly and severally.

THE CONDITIONS OF THIS OBLIGATION ARE SUCH THAT:

WHEREAS, the Contractor has on or about this day executed a Contract in writing with the City of Houston for _____
_____,
all of such work to be done as set out in full in said Contract documents therein referred to and adopted by the City Council, all of which are made a part of this instrument as fully and completely as if set out in full herein.

NOW THEREFORE, if the said Contractor shall comply with the provisions of Paragraph 11.5.1 of the General Conditions, and correct work not in accordance with the Contract documents discovered within the established one-year period, then this obligation shall become null and void, and shall be of no further force and effect; otherwise, the same is to remain in full force and effect.

Notices required or permitted hereunder shall be in writing and shall be deemed delivered when actually received or, if earlier, on the third day following deposit in a United States Postal Service post office or receptacle, with proper postage affixed (certified mail, return receipt requested), addressed to the respective other party at the address prescribed in the Contract documents, or at such other address as the receiving party may hereafter prescribe by written notice to the sending party.

IN WITNESS THEREOF, the said Contractor and Surety have signed and sealed this instrument on the respective dates written below their signatures and have attached current Power of Attorney.

ATTEST, SEAL: (if a corporation)
WITNESS: (if not a corporation)

_____
Name of Contractor

By: _____
Name:
Title:

By: _____
Name:
Title:
Date:

ATTEST/SURETY WITNESS:

(SEAL)

_____
Full Name of Surety

_____
Address of Surety for Notice

_____

_____
Telephone Number of Surety

By: _____
Name:
Title:
Date:

By: _____
Name:
Title: Attorney-in-Fact
Date:

This Ordinance or Contract has been reviewed as to form by the undersigned legal assistant and have been found to meet established Legal Department criteria. The Legal Department has not reviewed the content of these documents.

_____
Legal Assistant

_____
Date

END OF DOCUMENT

Document 00613

ONE-YEAR SURFACE CORRECTION BOND

THAT WE, _____, as Principal, hereinafter called Contractor, and the other subscriber hereto, _____, as Surety, do hereby acknowledge ourselves to be held and firmly bound to the City of Houston, a municipal corporation, in the sum of $_____ such sum being equal to four percent of the Original Contract Price, for the payment of which sum to be made to the City of Houston and its successors, Contractor and Surety do bind themselves, their successors, jointly and severally.

THE CONDITIONS OF THIS OBLIGATION ARE SUCH THAT:

WHEREAS, the Contractor has entered into a Contract in writing with the City of Houston, Texas, dated of even date herewith, for _____ _____, all of such work to be done in accordance with the Contract documents therein referred to, and adopted by the City Council of the City of Houston.

NOW THEREFORE, if the Contractor shall comply with the provisions of Paragraph 11.5.1 of the General Conditions, and repair, replace, restore, and correct surface work associated with backfill operations of subsurface work not in accordance with the Contract documents discovered within one year from the date that the One-year Maintenance Bond has expired, then this obligation shall become null and void, and shall be of no further force and effect; otherwise, the same is to remain in full force and effect.

Notices required or permitted hereunder shall be in writing and shall be deemed delivered when actually received or, if earlier, on the third day following deposit in a United States Postal Service post office or receptacle, with proper postage affixed (certified mail, return receipt requested), addressed to the respective other party at the address prescribed in the Contract documents, or at such other address as the receiving party may hereafter prescribe by written notice to the sending party.

IN WITNESS THEREOF, the said Principal and Surety have signed and sealed this instrument on the respective dates written below their signatures.

ATTEST, SEAL: (if a corporation)
WITNESS: (if not a corporation)

By: _____
Name:
Title:

_____
Name of Contractor

By: _____
Name:
Title:
Date:

ATTEST/SURETY WITNESS:

(SEAL)

_____
Full Name of Surety

_____
Address of Surety for Notice

_____

_____
Telephone Number of Surety

By: _____
Name:
Title:
Date:

By: _____
Name:
Title: Attorney-in-Fact
Date:

This Ordinance or Contract has been reviewed as to form by the undersigned legal assistant and have been found to meet established Legal Department criteria. The Legal Department has not reviewed the content of these documents.

_____
Legal Assistant

_____
Date

END OF DOCUMENT

Document 00620

AFFIDAVIT OF INSURANCE

BEFORE ME, the undersigned authority, on this day personally appeared

_____, who
Affiant

being by me duly sworn on his oath stated that he is _____, of
Title

_____,
Contractor's Company Name

the Contractor named and referred to within the Contract documents; that he is fully competent and authorized to give this affidavit and that the attached original insurance certificate truly and accurately reflects the insurance coverage that is now available and will be available during the term of the Contract.

_____
Affiant's Signature

SWORN AND SUBSCRIBED before me on _____.
Date

_____
Notary Public in and for the State of TEXAS

_____
Print or type Notary Public name

My Commission Expires: _____
Expiration Date

END OF DOCUMENT

Document 00624

AFFIDAVIT OF COMPLIANCE WITH
AFFIRMATIVE ACTION PROGRAM

BEFORE ME, the undersigned authority, on this day personally appeared _____, who
Affiant

being by me duly sworn on his oath stated that he is _____,
Title

of _____,
Contractor

the Contractor named and referred to within the Contract documents; that he is fully competent and authorized to give this affidavit and that the Contract is in compliance with the Affirmative Action Program of the City and has done all that is required by the Contract documents, the Affirmative Action Program, and pursuant to Chapter 15, Code of Ordinances, City of Houston, §15.16 et seq.

_____
Affiant's Signature

SWORN AND SUBSCRIBED before me on this day of _____, 20___.

_____
Notary Public in and for the State of TEXAS

_____
Print or Type Notary Public Name

My Commission Expires: _____
Expiration

END OF DOCUMENT

Document 00630
(POP-2)
City of Houston
Certification of Compliance with
Pay or Play Program

Contractor Name: _____ $ _____
(Contractor/Subcontractor) *(Amount of Contract)*

Contractor Address: _____

Project No.: WBS No. M-000265-0002-4

Project Name: Rampart Street (Sub-Project 2) Drainage and Paving

POP Liaison Name: _____

In accordance with the City of Houston Pay or Play Program authorized by Ordinance 2007-534 and Executive Order 1-7, Contractor/Subcontractor agrees to abide by the terms of this Program. This certification is required of all contractors for contracts subject to the program. You must agree EITHER to PAY or to PLAY for all covered employees. The Contractor/Subcontractor may also Pay on behalf of some covered employees and Play on behalf of other covered employees.

The Contractor/Subcontractor will comply with all provisions of the Pay or Play Program and will furnish all information and reports requested to determine compliance with program requirements of the Pay or Play Program (See Executive Order 1-7 for the terms of the Pay or Play program) The criteria of the program is as follows:

The Contractor/Subcontractor agrees to **"Pay"** $1.00 per hour for work performed by covered employees under the contract with the City. If independent contract labor is utilized the Contractor/Subcontractor agrees to report hours worked by the independent contract laborer and pay $1.00 per hour for work performed.

Otherwise the Contractor/Subcontractor agrees to **"Play"** by providing health benefits to each covered employee. The health benefits must meet the following criteria:

1. The employer will contribute no less than $150 per employee per month toward the total premium cost for single coverage only; and
2. The employee contribution, if any amount, will be no greater than 50% of the total premium cost and no more than $150 per month.
3. Pursuant to E.O. 1-7 section 4.04 a contractor is deemed to have complied with respect to a covered employee who is not provided health benefits if the employee refuses the benefits and the employee's contribution to the premium is no more than $40 per month.

Please select whether you choose to:	Pay	Play	Both

The Contractor/Subcontractor will file compliance reports with the City, which will include activity for covered employees subject to the program, in the form and to the extent requested by the administering department. Compliance reports shall contain information including, but not limited to, documentation showing employee health coverage and employee work records.
Note: The Contractor is responsible to the City for the compliance of covered employees of covered subcontractors and only forms that are accurate and complete will be accepted.

*Estimated Number of:	Prime Contractor	Sub-Contractor
Total Employees on City Job		
Covered Employees		
Non-Covered Employees		
Exempt Employees		

***Required**

I hereby certify that the above information is true and correct.

_____ _____
Contractor ***(Signature)*** Date

_____
Name and Title ***(Print or type)***

Document 00631
(POP-3)
City of Houston
Pay or Play Program
List of Subcontractors

Prime Contractor: _____ POP Contact Person: _____
Project Number/Description: _____ Address: _____
_____ _____
Email: _____
Phone: _____

Note: Include ALL subcontractors (use additional form if necessary)

Subcontractor Name	Supplier Y/N?	Amount of Subcontract	Check One: Pay	Play	Both (Pay and Play)	N/A	Contact Person	Phone	Email Address	Mailing Address

*If the above information is found to be submitted fraudulently with the intent to bypass or deceive the purpose of the Pay or Play Program the contractor will be held liable for all compliance requirements from the inception of the contract. All subcontracts that surpass the $200,000.00 threshold will be responsible for Pay or Play compliance from the inception of the contract.

Affidavit

I hereby solemnly affirm, certify and confirm that the total sub-contract value stated above is the final value of the contract (*) including all material costs, fuel, payroll, taxes, fees, profit sharing, labor or any payments in relation to the contracted work and no separate payment or contract has been made for the sub-contract under contract no._____ . The above sub-contract value includes all the costs related to work under the contract. The contractor and sub-contractor(s) agree to inform The Mayor's Office of Business Opportunity of any related cost(s) added to the contracted work and re-submit POP-3 with the current value of the sub-contract. I understand that compliance with "Pay or Play" program is mandatory and nothing has been hidden to circumvent the program requirements.

_____
Contractor Authorized Representative & Title Date
Name & Signature

Document 00633

CERTIFICATION BY PROPOSED MATERIAL SUPPLIERS,
LESSORS, AND PROFESSIONAL SERVICE PROVIDERS
REGARDING EQUAL EMPLOYMENT OPPORTUNITY

Company Name: _____ $_____
(Supplier, Lessor, Professional Service Provider) (Amount of Contract)

Company Address: _____

Company Telephone Number:_____ Fax:_____

E-mail Address: _____

Web Page/URL Address:_____

Company Tax Identification Number: _____

Project No.: WBS No. M-000265-0002-4

Project Name: Rampart Street (Sub-Project 2) Drainage and Paving

In accordance with the City of Houston Ordinance 78-1538, Supplier/Lessor/Professional Service Provider represents to be an equal opportunity employer and agrees to abide by the terms of the Ordinance. This certification is required of all Suppliers/Lessors/Professional Service Providers (herein Supplier) with contracts in the amount of $10,000.00 or more.

[ ] Yes [ ] No Supplier agrees not to discriminate against any employee or applicant for employment because of race, religion, color, sex, national origin, or age.

[ ] Yes [ ] No Supplier agrees that all qualified applicants will receive consideration for employment without regard to race, religion, color, sex, national origin, or age.

[ ] Yes [ ] No Supplier will comply with all provisions of Executive Order No. 11246 and rules, regulations and applicable orders of the Department of Labor or other Federal Agency responsible for enforcement of applicable equal opportunity and affirmative action provisions and will likewise furnish all information and reports required by the Mayor or Contract Compliance Officers for the purpose of investigation to ascertain and effect compliance with the City of Houston's Office of Affirmative Action and Contract Compliance.

[ ] Yes [ ] No The Supplier shall file and cause their sub-tier contractors to file compliance reports with the City in the form and to the extent as may be prescribed by the Mayor or Contract Compliance Officers. Compliance reports filed at such times as directed shall contain information including, but not limited to, the practices, policies, programs, and employment policies.

I hereby certify that the above information is true and correct.

_____ _____
COMPANY OFFICER (Signature) DATE

_____
NAME AND TITLE (Print or type)

END OF DOCUMENT

CITY OF HOUSTON
STANDARD DOCUMENT

MONTHLY SUBCONTRACTOR PAYMENT REPORTING FORM

****

Instructions:

Before submitting this document, Contractor shall provide

1. *Payment Notifications (00646) to each subcontractor on each contract;*
2. *A copy to the City Monitoring Authority of all applicable Payment Notifications;*
3. *A list to the City Monitoring Authority containing the information requested in this document for each subcontractor from which Contractor has withheld payment; and*
4. *The notarized signature of Contractor's Representative.*

****

Document 00642

MONTHLY SUBCONTRACTOR PAYMENT REPORTING FORM

Legal Project Name:_____

Outline Agreement No.:_____ WBS No.:_____

Contractor's Company Name: _____

Address: _____

CERTIFICATION

_____, Contractor's Representative for the above referenced Contract, hereby certifies that (1) Contractor has paid all subcontractors, except those noted below, (2) Contractor made such payments (a) in proportion to the amount City paid Contractor and (b) in accordance and compliance with all applicable Contract Documents and laws; and (3) Contractor withheld no sums from any subcontractor for allegations of deficiency in Work. The term "subcontractor", as used herein, includes all persons or firms furnishing work, materials, services or equipment Contractor ordered incorporated into Work or placed near the Project for which the City made partial payment.

EXCEPTION: Contractor sent Payment Notifications to the following subcontractors explaining why Contractor withheld payment. Copies are attached.

Subcontractor Name:_____	Subcontractor Name: _____
Street Address: _____	Street Address: _____
City, State, and Zip Code: _____	City, State, and Zip Code: _____
Amount of Payment Withheld:_____	Amount of Payment Withheld: _____
Date Payment First Withheld: _____	Date Payment First Withheld: _____
Description of Good Faith Reason:_____	Description of Good Faith Reason:_____
_____	_____

_____
(Signature of Contractor's Representative)

_____
(Print or Type Name of Contractor's Representative)

SWORN TO AND SUBSCRIBED before me on: _____
Date

_____
Notary Public in and for the State of Texas

My Commission Expires: _____
Expiration Date

_____
Print or Type Name of Notary Public

****

Instructions:

If Contractor withholds any amount of a payment to a Subcontractor for any reason, the Contractor shall send Payment Notifications to the Subcontractor explaining why the payment was withheld.

Contractor shall provide the City Monitoring Authority with Payment Notifications for each subcontractor from which Contractor has withheld payment. Contractor shall submit all necessary Payment Notifications (Document 00646), Payment Reporting Forms (Document 00642), and other documentation at the same time Contractor submits the Application and Certification for Payment or the Estimate for Payment.

****

Document 00646

PAYMENT NOTIFICATION – EXPLANATION OF WITHHOLDING

Legal Project Name:_____

Outline Agreement No.:_____ WBS No.:_____

Contractor's Company Name: _____

Address: _____

Date: _____

SUBCONTRACTOR PAYMENT INFORMATION:

Subcontractor Name:_____

Street Address: _____

City, State, and Zip Code: _____

Business Phone Number: _____

Amount of Subcontractor Invoice: _____

Amount of Payment Made: _____

Amount of Payment Withheld:_____

Date Payment First Withheld: _____

DETAILED EXPLANATION OF WITHHOLDING: _____

_____

_____

_____

_____

_____ _____

(Signature of Contractor's Representative) (Print or Type Name of Contractor's Representative)

****

List of Changes:

02-04-2005: Added new Paragraph 3.25.1.3 concerning strict liability. Edited Paragraph 3.25.1.1 accordingly. Edited Paragraph 9.6.1.4 to remove the words "retainage of".

08-15-2006: Revised many references to Section(s) to read Paragraph(s). Added Small Business Enterprise (SBE) requirement to Paragraphs 3.5.3, 3.5.3.1, 3.5.3.2 and 3.5.3.3.

08-17-2006: Added new Paragraphs 5.2.4, 5.2.5, 9.2.1 and 9.4.2 concerning prompt payment provisions.

10-10-2006: Added new Paragraphs 9.7.1.8, 9.7.1.9 concerning prompt payment provisions. Changed 9.8.1 to "20 days", and added language to 9.8.2 concerning "7 calendar days" and payment disputes.

03-10-2008: Revised Table 1 after 11.2.11 (Installation Floater), and expanded Paragraph 11.5.1 on Maintenance Bonds.

09-10-2008: Revised 5.2.5[sic] on page 17 to read 5.2.4.

10-24-2008: Revised many sections to include or amend numbering.

08-01-2009: Amended 1.1.6., definition of City Engineer. Amended 2.2 to say "Duties" and added 2.2.2 stating that the contract imposes no implied duty on City. Added 3.5.4 concerning Contractor Participation in the Pay or Play Program. Added 3.28 pertaining to Contractor Debt. Amended 4.1.2 to prohibit the City Engineer from delegating signature authority under 4.4. Amended 4.1.11 stating that City owes no duty to Contractor not stated in contract. Amended 4.3.2 to delete second sentence concerning City Engineers decision as a condition precedent to litigation. Amended 4.6 to require both parties to wave claims, attorney fees, and interest. Amended 11.2.6 to require Contractor to notify the City of any Insurance Policy cancelation or modification. Amended 11.2.8 to exempt Workers' Compensation coverage from certain documentation requirements. Amended Table 1 after 11.2.11 to specify automobile coverage requirements. Added 11.3.3 to address content requirements on Certificates of Insurance. Added 13.3.2 to extend joint and several liability to any series, affiliate, subsidiary, or successor to which Contractor assigns or transfers assets. Amended throughout to standardize references to Sections (x.x), Paragraphs (x.x.x), and Subparagraphs (x.x.x.x and below).

01-15-2010: Amended Sections 4.4 and 4.6 concerning written decisions, findings of fact, and hearings by the City engineer, precedent to litigation, and interest under Chapter 2251 of the Texas Local Government Code. Removed Section 4.5 NON-BONDING MEDIATION and renumbered and renamed Section 4.6 as 4.5 CONDITION PRECEDENT TO SUIT; WAIVER OF ATTORNEY FEES AND INTEREST.

05-01-2010: Amended Subsection 1.1.5 to change "municipal corporation" to "home rule municipality". Amended Subsection 3.9.1.1 to reflect change from Low Sulfur Deisel Fuel (500 ppm) to Ultra Low Sulfur Fuel (15 ppm).

12-07-2010: Amended Section 14.1.1.5 to mirror change in Section 3.9.1.1; Low Sulfur Diesel Fuel was changed to Ultra Low Sulfur Fuel.

12-09-2010: Amended Section 4.5 (and Table of Contents) by adding "Interim Payment Waiver & Release" language from Document 00850. Amended Subsection 11.3 to include new insurance requirements.

12-10-2010: Inserted phrase into definition of Claim (§1.1.7) defining what a Claim can constitute
01-14-2011: Insertion of terms "Business Enterprise" and "Business Enterprise Policy" into definition section (§1.1) and insertion of those terms in §3.5, as appropriate, and deletion of old §3.5.3
01-18-2011: Renaming of §4.5; renumbering of Table of Contents due to introduction of "Interim Payment Waiver & Release" as a separate section (§4.6)
01-31-2011: Edit of Section 4.6, Interim Payment Waiver & Release" to reflect language suggestions of Litigation Division of Legal Dept.
02-09-2011: Edit of language in definitions of "Business Enterprise" and "Business Enterprise Policy"
10-12-2011: Amended Section 8.2, related to delays and extensions of time, to strengthen language suggested in 2011 Construction Law CLE.
10-19-2011: General reformatting of entire document for consistency; updating of header re: date; insertion of "Mayor's Office of Business Opportunity", as appropriate, to refect name change
10-27-2011: Added a definition for "Mayor's Office of Business Opportunity"; amended Section 8.2.2 to refer to Section 4.3.6.2; replaced MWBE with "Business Enterprise", where appropriate; added "persons, or entities" to Section 5.1 to broaden applicable provisions; updated issue date to proposed Issue date of November 1, 2011.
10-31-2011: edited definition of "Business Enterprise"
07-01-2013: Edited Section 3.5.3 to remove the binding arbitration requirement for contractor and subcontractor claims, per change in Office of Business Opportunity policy.
07-25-2013: Removed Section 4.5.1, regarding conditions precedent to suit.
11-01-2014: Changed Section 3.5.2 to reflect a move away from arbitration to mediation to resolve subcontractor disputes; removed requirement for City Engineer's decision before a suit may be brought from Section 4.5.2; included language in Section 5.1.3 requiring submission of written contracts with Subcontractors within 30 days of Notice to Proceed issuance; changed Section 11.2 to reflect required insurance coverages updated for new fiscal year; added more explicit language regarding the City's Additional Insured status in Section 11.2.4 ("Insured Parties") and the City's waiver of subrogation requirement in Section11.2.7 ("Subrogation").
01-01-2015: Changed the Automobile Insurance requirement from $2,000,000 to $1,000,000.
07-01-2015: Changed language in Article 11 to reflect new insurance requirements.
07-10-2015: Edited Section 9 and Section 14 to make eletronic submission of certified payrolls mandatory.

****

Document 00700

GENERAL CONDITIONS

August 1, 2015 EDITION

TABLE OF ARTICLES

1. GENERAL PROVISIONS
2. THE CITY
3. CONTRACTOR
4. ADMINISTRATION OF THE CONTRACT
5. SUBCONTRACTORS AND SUPPLIERS
6. CONSTRUCTION BY THE CITY OR BY SEPARATE CONTRACTORS
7. CHANGES IN THE WORK
8. TIME
9. PAYMENTS AND COMPLETION
10. SAFETY PRECAUTIONS
11. INSURANCE AND BONDS
12. UNCOVERING AND CORRECTION OF THE WORK
13. MISCELLANEOUS PROVISIONS
14. TERMINATION OR SUSPENSION OF THE CONTRACT

ARTICLE 1 - GENERAL PROVISIONS 3

1.1 DEFINITIONS 3
1.2 EXECUTION, CORRELATION, AND INTENT 5
1.3 OWNERSHIP AND USE OF DOCUMENTS 6
1.4 INTERPRETATION 6

ARTICLE 2 - THE CITY 6

2.1 LIMITATIONS OF THE CITY'S OFFICERS AND EMPLOYEES 6
2.2 DUTIES OF THE CITY 6
2.3 AVAILABILITY OF LAND AND USE OF SITE 6
2.4 THE CITY'S RIGHT TO STOP THE WORK 7
2.5 THE CITY'S RIGHT TO CARRY OUT WORK 7

ARTICLE 3 - CONTRACTOR 7

3.1 RESPONSIBILITIES 7
3.2 REVIEW OF CONTRACT AND FIELD CONDITIONS BY CONTRACTOR 7
3.3 SUPERVISION AND CONSTRUCTION PROCEDURES 7
3.4 SUPERINTENDENT 8
3.5 LABOR 8
3.6 PREVAILING WAGE RATES 9
3.7 LABOR CONDITIONS 9
3.8 DRUG DETECTION AND DETERRENCE 9
3.9 MATERIALS & EQUIPMENT 10
3.10 PRODUCT OPTIONS AND SUBSTITUTIONS 10
3.11 CASH ALLOWANCES 11
3.12 WARRANTY 11
3.13 TAXES 12
3.14 PERMITS, FEES, AND NOTICES 12
3.15 CONSTRUCTION SCHEDULES 12
3.16 DOCUMENTS AND SAMPLES AT THE SITE 12
3.17 MANUFACTURER'S SPECIFICATIONS 12
3.18 SHOP DRAWINGS, PRODUCT DATA, AND SAMPLES 13
3.19 CULTURAL RESOURCES AND ENDANGERED SPECIES 13
3.20 CUTTING AND PATCHING 14
3.21 CLEANING 14
3.22 SANITATION 14
3.23 ACCESS TO WORK AND TO INFORMATION 14
3.24 TRADE SECRETS 14
3.25 INDEMNIFICATION 14
3.26 RELEASE AND INDEMNIFICATION – PATENT, COPYRIGHT, TRADEMARK, AND TRADE SECRET INFRINGEMENT 15
3.27 INDEMNIFICATION PROCEDURES 15
3.28 CONTRACTOR DEBT 156

ARTICLE 4 - ADMINISTRATION OF THE CONTRACT 16

4.1 CONTRACT ADMINISTRATION 16
4.2 COMMUNICATIONS IN ADMINISTRATION OF THE CONTRACT 17
4.3 CLAIMS AND DISPUTES 17
4.4 RESOLUTION OF CLAIMS AND DISPUTES 18
4.5 CONDITION PRECEDENT TO SUIT; WAIVER OF ATTORNEYFEES AND INTEREST 18
4.6 INTERIM PAYMENT WAIVER & RELEASE 18

ARTICLE 5 - SUBCONTRACTORS AND SUPPLIERS 19

5.1 AWARD OF SUBCONTRACTS OTHER CONTRACTS FOR PORTIONS OF THE WORK 19
5.2 CONTRACTOR RESPONSIBILITY FOR SUBCONTRACTORS 19

ARTICLE 6 - CONSTRUCTION BY THE CITY OR BY SEPARATE CONTRACTORS 19

6.1 THE CITY'S RIGHT TO PERFORM CONSTRUCTION AND TO AWARD SEPARATE CONTRACTS 19
6.2 COORDINATION 19
6.3 MUTUAL RESPONSIBILITY 20
6.4 THE CITY'S RIGHT TO CLEAN UP 20

ARTICLE 7 - CHANGES IN THE WORK 20

7.1 CHANGES 20
7.2 WORK CHANGE DIRECTIVES 20
7.3 ADJUSTMENTS IN CONTRACT PRICE 21
7.4 MINOR CHANGES IN THE WORK 22

ARTICLE 8 - TIME 22

8.1 PROGRESS AND COMPLETION 22
8.2 DELAYS AND EXTENSIONS OF TIME 22

ARTICLE 9 - PAYMENTS AND COMPLETION 23

9.1 UNIT PRICE WORK 23
9.2 ESTIMATES FOR PAYMENT, UNIT PRICE WORK 23
9.3 STIPULATED PRICE WORK 24
9.4 APPLICATIONS FOR PAYMENT, STIPULATED PRICE WORK 24
9.5 CERTIFICATES FOR PAYMENT 24
9.6 COMPUTATIONS OF CERTIFICATES FOR PAYMENT 24
9.7 DECISIONS TO WITHHOLD CERTIFICATION 24
9.8 PROGRESS PAYMENTS 25
9.9 DATE OF SUBSTANTIAL COMPLETION 25
9.10 PARTIAL OCCUPANCY OR USE 26
9.11 FINAL COMPLETION AND FINAL PAYMENT 26

9.12 LIQUIDATED DAMAGES..... 27

ARTICLE 10 - SAFETY PRECAUTIONS..... 27

10.1 SAFETY PROGRAMS..... 27
10.2 POLLUTANTS AND POLLUTANT FACILITIES..... 28
10.3 SAFETY OF THE ENVIRONMENT, PERSONS, AND PROPERTY..... 28
10.4 EMERGENCIES..... 28

ARTICLE 11 - INSURANCE AND BONDS..... 28

11.1 GENERAL INSURANCE REQUIREMENTS..... 28
11.2 INSURANCE TO BE PROVIDED BY CONTRACTOR..... 29
11.3 PROOF OF INSURANCE..... 32
11.4 PERFORMANCE AND PAYMENT BONDS..... 33
11.5 MAINTENANCE BONDS..... 33
11.6 SURETY..... 33
11.7 DELIVERY OF BONDS..... 344

ARTICLE 12 - UNCOVERING AND CORRECTION OF THE WORK..... 344

12.1 UNCOVERING OF THE WORK..... 34
12.2 CORRECTION OF THE WORK..... 34
12.3 ACCEPTANCE OF NONCONFORMING WORK..... 34

ARTICLE 13 - MISCELLANEOUS PROVISIONS..... 34

13.1 GOVERNING LAWS..... 34
13.2 SUCCESSORS..... 345
13.3 BUSINESS STRUCTURE AND ASSIGNMENTS . 355
13.4 WRITTEN NOTICE..... 35
13.5 RIGHTS AND REMEDIES..... 35
13.6 TESTS AND INSPECTIONS..... 35
13.7 INTEREST..... 35
13.8 PARTIES IN INTEREST..... 36
13.9 ENTIRE CONTRACT..... 36
13.10 WRITTEN AMENDMENT..... 36
13.11 COMPLIANCE WITH LAWS..... 36
13.12 SEVERABILITY..... 36

ARTICLE 14 - TERMINATION OR SUSPENSION OF THE CONTRACT..... 36

14.1 TERMINATION BY THE CITY FOR CAUSE..... 36
14.2 TERMINATION BY THE CITY FOR CONVENIENCE..... 37
14.3 SUSPENSION BY THE CITY FOR CONVENIENCE..... 37
14.4 TERMINATION BY CONTRACTOR..... 38

ARTICLE 1 - GENERAL PROVISIONS

1.1 DEFINITIONS

1.1.1 Agreement: Document signed by the Parties and binding the Parties, containing the name of Contractor, title and location of the Project, Original Contract Time, Original Contract Price, enumeration of documents included in the Contract, and other provisions.

1.1.2 Bonds: Performance Bond, Payment Bond, Maintenance Bond, and other Surety instruments executed by Surety. When in singular form, refers to individual instrument.

1.1.3 Business Enterprise: Any business entity registered in a program authorized by 49 C.F.R. § 26 (where applicable) or City Code of Ordinances, Chapter 15, Article II, relating to Equal Opportunity Employment and taking affirmative action to ensure that applicants are employed and employees are treated without regard to race, religion, color, sex, national origin, or age. The term "Business Enterprise" may include any Disadvantaged Business Enterprise ("DBE"), Minority Business Enterprise ("MBE"), Woman Business Enterprise ("WBE"), Small Business Enterprise ("SBE"), Person with Disability Enterprise ("PDBE"), and any Historically Underutilized Business ("HUB").

1.1.4 Business Enterprise Policy: Contract documents and applicable policies relating to Business Enterprises and authorized under 49 C.F.R. § 26 or City Code of Ordinances, Chapter 15, Article II.

1.1.5 Cash Allowance: An estimated sum of money to be used only for a limited class of expenditures such as utility relocation costs, fees for special licenses or permits, or other "pass-through" costs that would be the same for any contractor. Cash Allowances may not be used to purchase goods or services that are not specified in the Contract. The unspecified items must be purchased according to the terms of Article 7.

1.1.6 Change Order: Written instrument prepared by the City and signed by City Engineer and Contractor, specifying the following:

1.1.6.1 a change in the Work;
1.1.6.2 a change in Contract Price, if any; and
1.1.6.3 a change in Contract Time, if any.

The value of a Change Order is the net amount after offsetting all deductions against all additions effected by the Change Order.

1.1.7 City: The City of Houston, a home rule municipality located principally within Harris County, Texas, including its successors and its authorized representatives.

1.1.8 City Engineer: The City Engineer, or the City employee representing the City Engineer, designated in the Agreement and authorized to represent the City, or successors.

1.1.9 Claim: Written demand or written assertion by one Party seeking adjustment of the Contract, payment of money, extension of time, or other relief under the Contract and includes, but is not limited to, claims for materials, labor, equipment, delay, changes, adjustments, substitutions, fees and third party claims. The Party making the Claim has the responsibility to substantiate the Claim.

1.1.10 Conditions of the Contract: General Conditions and Supplementary Conditions.

1.1.11 Construction Manager: Person or firm under contract with the City as its authorized representative to oversee and administer construction of the Work, and who may perform the role of Project Manager and Inspector, as designated by City Engineer in writing.

1.1.12 Contract: The Agreement; documents enumerated in and incorporated into the Agreement, Modifications, and amendments.

1.1.13 Contract Price: The monetary amount stated in the Agreement adjusted by Change Order, and increases or decreases in Unit Price Quantities, if any.

1.1.14 Contract Time: The number of days stated in the Agreement to substantially complete the Work, plus days authorized by Change Order.

1.1.15 Contractor: Person or firm identified as such in the Agreement including its successors and its authorized representatives.

1.1.16 Date of Commencement of the Work: Date established in Notice to Proceed on which Contract Time will commence. This date will not be changed by failure of Contractor, or persons or entities for whom Contractor is responsible, to act.

1.1.17 Date of Substantial Completion: Date that construction, or portion thereof designated by City Engineer, is certified by City Engineer to be substantially complete.

1.1.18 Design Consultant: Person or firm, under contract with the City, to provide professional services during construction and its authorized representatives. If a Design Consultant is not employed for services during construction, Project Manager will perform duties of Design Consultant designated in the Contract in addition to usual duties of Project Manager.

1.1.19 Drawings: Graphic and pictorial portions of the Contract that define the character and scope of the Work.

1.1.20 Extra Unit Price: Unit Prices, which may be required for completion of the Work. These Unit Prices and Unit Price Quantities are in the Contract and are included in Original Contract Price.

1.1.21 Furnish: To supply, pay for, deliver to the site, and unload.

1.1.22 General Requirements: The sections of Division 01 Specifications that specify administrative and procedural requirements and temporary facilities required for the Work.

1.1.23 Inspector: City's employee or agent authorized to assist with inspection of the Work.

1.1.24 Install: Unpack, assemble, erect, place, anchor, apply, work to dimension, finish, cure, clean, protect, and similar operations.

1.1.25 Legal Holiday: Day established by the City Council as a holiday.

1.1.26 Major Unit Price Work: An individual Unit Price item,

1.1.26.1 whose value is greater than five percent of Original Contract Price,

1.1.26.2 whose value becomes greater than five percent of Original Contract Price as the result of an increase in quantity, or

1.1.26.3 whose value is $100,000, whichever is least.

1.1.27 Mayor's Office of Business Opportunity: any reference to, or use of, the "Office of Affirmative Action" shall mean the Mayor's Office of Business Opportunity, or any such future name to which it is changed.

1.1.28 Minor Change in the Work: A written change in the Work, ordered by City Engineer, that does not change Contract Price or Contract Time, and that is consistent with the general scope of the Contract.

1.1.29 Modification: Change Order, Work Change Directive, or Minor Change in the Work.

1.1.30 Notice of Noncompliance: A written notice by City Engineer to Contractor regarding defective or nonconforming work that does not meet the Contract requirements, and that establishes a time by which Contractor shall correct the defective or nonconforming work.

1.1.31 Notice to Proceed: A written notice by City Engineer to Contractor establishing Date of Commencement of the Work.

1.1.32 Original Contract Price: The monetary amount originally stated in the Agreement.

1.1.33 Parties: Contractor and the City. When in singular form, refers to Contractor or the City.

1.1.34 Pollutant: Any materials subject to the Texas Solid Waste Disposal Act.

1.1.35 Pollutant Facility: Any facility regulated by the State of Texas to protect the health and environment from contamination by Pollutants, including without limitation, landfills, oil and gas production and storage facilities, wastewater facilities, waste injection wells, and storage tanks (including drums).

1.1.36 Product: Materials, equipment, or systems incorporated into the Work or to be incorporated into the Work.

1.1.37 Product Data: Illustrations, standard schedules, performance charts, instructions, brochures, diagrams, and other information furnished by Contractor to illustrate a Product.

1.1.38 Project: Total construction, of which the Work performed under the Contract may be the whole or a part, and which may include construction by the City or by separate contractors.

1.1.39 Project Manager: City Engineer's authorized representative for administration of the Work. Titles used within the City's departments may be different than those used in this definition.

1.1.40 Provide: Furnish and Install, complete, ready for intended use.

1.1.41 Samples: Physical examples that illustrate Products, or workmanship, and establish standards by which the Work is judged.

1.1.42 Shop Drawings: Drawings, diagrams, schedules, and other data specially prepared for the Work by Contractor, Subcontractor or Supplier, to illustrate a portion of the Work.

1.1.43 Specifications: Divisions 01 through 16 of the documents that are incorporated into the Agreement, consisting of written General Requirements and requirements for Products, standards, and workmanship for the Work, and performance of related services.

1.1.44 Stipulated Price: Single lump sum amount stated in the Contract for completion of the Work, or for designated portion of the Work.

1.1.45 Subcontractor: Person or firm that has direct or indirect contract with Contractor or with another Subcontractor to perform a portion of the Work and its authorized representatives.

1.1.46 Superintendent: Employee of Contractor having authority and responsibility to act for and represent Contractor.

1.1.47 Supplementary Conditions: Part of Conditions of the Contract that amends or supplements General Conditions.

1.1.48 Supplier: Manufacturer, distributor, materialman, or vendor having a direct agreement with Contractor or Subcontractor for Products, or services and its authorized representatives.

1.1.49 Surety: Corporate entity that is bound by one or more Bonds, and is responsible for completion of the Work, including the correction period, and for payment of debts incurred in fulfilling the Contract. Surety shall include co-surety or reinsurer, as applicable.

1.1.50 Underground Facilities: Pipes, conduits, ducts, cables, wires, manholes, vaults, tanks, tunnels, or other such facilities or attachments and encasements containing such facilities that exist below ground level.

1.1.51 Unit Price: An amount stated in the Contract for an individual, measurable item of work, which, when multiplied by actual quantity incorporated into the Work, amounts to full compensation for completion of the item, including work incidental to it.

1.1.52 Unit Price Quantities: Quantities indicated in the Contract that are approximations made by the City for contracting purposes.

1.1.53 Work: Entire construction required by the Contract, including all labor, Products, and services provided by Contractor to fulfill Contractor's obligations. The Work may constitute the whole or a portion of the Project.

1.1.54 Work Change Directive: A written change in the Work, ordered by City Engineer, that is within the general scope of the Contract and consisting of additions, deletions, or other revisions. A Work Change Directive will state proposed basis for adjustment, if any, in Contract Price or Contract Time, or both.

1.2 EXECUTION, CORRELATION, AND INTENT

1.2.1 Execution of the Contract by Contractor is conclusive that Contractor has visited the Work site, become familiar with local conditions under which the Work will be performed, and fully informed itself as to conditions and matters which can affect the Work or costs. Contractor further agrees that it has carefully correlated personal observations with requirements of the Contract.

1.2.2 The Contract and Modifications have been read and carefully considered by Contractor, who understands and agrees to their sufficiency for the Work. The Contract may not be more strongly construed against the City than against Contractor and Surety.

1.2.3 Contractor shall include all items necessary for proper execution and completion of the Work.

1.2.4 Reference to standard specifications, manuals, or codes of a technical society, organization, or association, or to laws or regulations of a governmental authority, whether specific or implied, mean the latest edition in effect as of date of receipt of bids, except as may be otherwise specifically stated in the Contract.

1.2.5 No provision of any referenced standard, specification, or manual changes the duties and responsibilities of the City, City Engineer, Contractor, or Design Consultant from those set forth in the Contract. Nor do these provisions assign to Design Consultant any duty or authority to supervise or direct performance of the Work or any duty or

authority to undertake any actions contrary to provisions of the Contract.

1.2.6 Organization of Specifications into divisions, sections, and articles and arrangement of Drawings does not control Contractor in dividing the Work among Subcontractors or in establishing the extent of work to be performed by any trade.

1.2.7 Unless otherwise defined in the Contract, words which have well-known construction industry technical meanings are used in the Contract in accordance with these recognized meanings.

1.3 OWNERSHIP AND USE OF DOCUMENTS

1.3.1 Drawings, Specifications, and other documents prepared by the City or by Design Consultant are instruments of service through which the Work to be executed by Contractor is described. Contractor may retain one Contract record set.

1.3.2 Neither Contractor, Subcontractor, nor Supplier will own or claim a copyright to documents contained in the Contract or any part of the Contract.

1.3.3 Documents contained in the Contract, prepared by the City or by Design Consultant, and copies furnished to Contractor, are for use solely with respect to the Work. They may not be used by Contractor, Subcontractor or Supplier on other projects or for additions to the Work, outside the scope of the Work, without the specific written consent of City Engineer, and Design Consultant, when applicable.

1.3.4 Contractor, Subcontractors, and Suppliers are granted a limited license to use and reproduce applicable portions of the Contract appropriate to and for use in execution of their work under the Contract.

1.4 *INTERPRETATION*

1.4.1 Specifications are written in an imperative streamlined form and are directed to Contractor, unless noted otherwise. When written in this form, words "shall be" are included by inference where a colon (:) is used within sentences or phrases.

1.4.2 In the interest of brevity, the Contract frequently omits modifying words such as "all" and "any" and articles such as "the" and "an", but an absent modifier or article is not intended to affect interpretation of a statement.

ARTICLE 2 - THE CITY

2.1 *LIMITATIONS OF THE CITY'S OFFICERS AND EMPLOYEES*

2.1.1 No officer or employee of the City may authorize Contractor to perform an act or work contrary to the Contract, except as otherwise provided in the Contract.

2.2 *DUTIES OF THE CITY*

2.2.1 If a building permit is required, the City will process an application for, and Contractor shall purchase the building permit before Date of Commencement of the Work.

2.2.2 The City will make available to Contractor a reproducible set of Drawings. Additional copies will be furnished, on Contractor's request, at the cost of reproduction.

2.2.3 When necessary for performance of the Work, the City will provide surveys describing physical characteristics, legal limitations, legal description of site, and horizontal and vertical control adequate to lay out the Work.

2.2.4 Information or services that the City is required to provide under the Contract will be provided by the City with reasonable promptness to avoid delay in orderly progress of the Work.

2.2.5 The Contract imposes no implied duty on the City. The City does not warrant any plans or specifications associated with the Contract.

2.2.6 Except as expressly stated in this Article, the City owes no duty to the Contractor or any subcontractor.

2.3 *AVAILABILITY OF LAND AND USE OF SITE*

2.3.1 The City will furnish, as indicated in the Contract, rights-of-way, land on which the Work is to be performed, and other land designated in the Contract for use by Contractor unless otherwise provided in the Contract.

2.3.2 Contractor shall confine operations at site to those areas permitted by law, ordinances, permits, and the Contract, and may not unreasonably encumber site with materials or equipment.

2.3.3 In addition to land provided by the City under Section 2.3, Contractor shall provide all land and access to land that may be required for use by Contractor for temporary construction facilities or for storage of materials and equipment, and shall indemnify the City during its use of the land as stated in Section 3.25.

2.4 *THE CITY'S RIGHT TO STOP THE WORK*

2.4.1 If Contractor fails to carry out the Work in accordance with the Contract, or fails to correct work which is not in accordance with requirements of the Contract as required in Sections 12.1 and 12.2, the City may, by Notice of Noncompliance, order Contractor to stop the Work or any portion of the Work until the cause for the order has been eliminated. However, the right of the City to stop the Work will not give rise to a Claim for delay or to a duty on the part of the City to exercise this right for the benefit of Contractor or any other person or entity, except to the extent required by Section 6.2. If Contractor corrects the defective or nonconforming work within the time established in Notice of Noncompliance, City Engineer will give written notice to Contractor to resume performance of the Work.

2.5 *THE CITY'S RIGHT TO CARRY OUT WORK*

2.5.1 If Contractor fails to carry out work in accordance with the Contract, and fails within the period established in a Notice of Noncompliance to correct the nonconforming work, the City may, after expiration of the required period, correct the deficiencies without prejudice to other remedies the City may have, including rights of the City under Section 14.1.

2.5.1.1 When the City corrects deficiencies, City Engineer will issue an appropriate Change Order and deduct from payments then or thereafter due Contractor the cost of correcting the deficiencies, including compensation for Design Consultant's and Construction Manager's additional services and expenses made necessary by such default, neglect, or failure. This action by the City and amounts charged to Contractor are both subject to prior approval of City Engineer. If payments, then or thereafter due Contractor, are not sufficient to cover these amounts, Contractor shall pay the difference to the City.

2.5.2 Notwithstanding the City's right to carry out work, maintenance and protection of the Work remains Contractor's responsibility, as provided in the Contract.

ARTICLE 3 - CONTRACTOR

3.1 *RESPONSIBILITIES*

3.1.1 Contractor shall maintain office with agent in the greater City of Houston area during the Contractor's performance under the Contract. Contractor shall file its street address with City Engineer.

3.1.2 Contractor and Contractor's employees shall not give or lend money or anything of value to an officer or employee of the City. Should this Paragraph 3.1.2 be violated, City Engineer may terminate the Contract under Section 14.1.

3.2 *REVIEW OF CONTRACT AND FIELD CONDITIONS BY CONTRACTOR*

3.2.1 Contractor shall carefully study and compare documents contained in the Contract with each other and with information furnished by the City pursuant to Section 2.2 and shall immediately report, in writing, any errors, inconsistencies, or omissions to City Engineer. If work is affected, Contractor shall obtain a written interpretation or clarification from City Engineer before proceeding with the affected work. However, Contractor will not be liable to the City for failure to report an error, inconsistency, or omission in the Contract unless Contractor had actual knowledge or should have had knowledge of the error, inconsistency, or omission.

3.2.2 Contractor shall take field measurements and verify field conditions, and shall carefully compare the conditions and other information known to Contractor with the Contract, before commencing activities. Contractor shall immediately report, in writing, to City Engineer for interpretation or clarification of discrepancies, inconsistencies, or omissions discovered during this process.

3.2.3 Contractor shall make a reasonable attempt to understand the Contract before requesting interpretation from City Engineer.

3.3 *SUPERVISION AND CONSTRUCTION PROCEDURES*

3.3.1 Contractor shall supervise, direct, and inspect the Work competently and efficiently, devoting the attention and applying the skills and

expertise as necessary to perform the Work in accordance with the Contract. Contractor is solely responsible and has control over construction means, methods, techniques, sequences, and procedures of construction; for safety precautions and programs in connection with the Work; and for coordinating all work under the Contract.

3.3.2 Regardless of observations or inspections by the City or City's consultants, Contractor shall perform and complete the Work in accordance with the Contract and submittals approved pursuant to Section 3.18. The City is not liable or responsible to Contractor or Surety for work performed by Contractor that is not in accordance with the Contract regardless of whether discovered during construction or after acceptance of the Work.

3.4 *SUPERINTENDENT*

3.4.1 Contractor shall employ a competent Superintendent and necessary assistants who shall be present at the site during performance of the Work. Communications given to Superintendent are binding on the Contractor.

3.4.2 Contractor shall notify City Engineer in writing of its intent to replace the Superintendent. Contractor may not replace the Superintendent if City Engineer makes a reasonable objection in writing.

3.5 *LABOR*

3.5.1 Contractor shall provide competent, qualified personnel to survey and lay out the Work and perform construction as required by the Contract. The City may, by written notice, require Contractor to remove from the Work any employee of Contractor or Subcontractors to whom City Engineer makes reasonable objection.

3.5.2 Contractor shall comply with the applicable Business Enterprise Policy set out in this Agreement and in the Supplementary Conditions, as set out in Chapter 15, Article V of the City of Houston Code of Ordinances.

3.5.3 When Original Contract Price is greater than $1,000,000, Contractor shall make Good Faith Efforts to award subcontracts or supply agreements in at least the percentages set out in the Supplementary Conditions for Business Enterprise Policy. Contractor acknowledges that it has reviewed the requirements for Good Faith Efforts on file with the City's Office of Business Opportunity and shall comply with them.

3.5.3.1 Contractor shall require written subcontracts with Business Enterprises and shall submit all disputes with Business Enterprises to voluntary mediation. Business Enterprise subcontracts complying with City Code of Ordinances Chapter 15, Article II must contain the terms set out in Subparagraph 3.5.3.2. If Contractor is an individual person, as distinguished from a corporation, partnership, or other legal entity, and the amount of the subcontract is $50,000 or less, the subcontract must also be signed by the attorneys of the respective parties.

3.5.3.2 Contractor shall ensure that subcontracts with Business Enterprise firms are clearly labeled **"THIS CONTRACT MAY BE SUBJECT TO MEDIATION ACCORDING TO THE TEXAS ALTERNATIVE DISPUTE RESOLUTION ACT"** and contain the following terms:

3.5.3.2.1 (Business Enterprise) may not delegate or subcontract more than 50 percent of work under this subcontract to any other subcontractor without the express written consent of the City's OBO Director (the "Director").

3.5.3.2.2 (Business Enterprise) shall permit representatives of the City of Houston, at all reasonable times, to perform (1) audits of the books and records of the Subcontractors and Suppliers, and (2) inspections of all places where work is to be undertaken in connection with this subcontract. (Business Enterprise) shall keep the books and records available for this purpose for at least four years after the end of its performance under this subcontract. Nothing in this provision shall affect the time for bringing a cause of action nor the applicable statute of limitations.

3.5.3.2.3 Within five business days of execution of this subcontract, Contractor and (Business Enterprise) shall designate in writing to the Director an agent for receiving any notice required or permitted to be given pursuant to Chapter 15 of the Houston City Code of Ordinances, along with the street and mailing address and phone number of the agent.

3.5.4 The requirements and terms of the City of Houston Pay or Play Program, as set out in Executive Order 1-7 and Ordinance 2007-0534, are incorporated into the Contract for all purposes. Contractor shall comply with the terms and conditions of the Pay or Play Program as they are set out at the time of City Council approval of this

agreement. IF CONTRACTOR DOES NOT PAY IN ACCORDANCE WITH THE PAY OR PLAY PROGRAM WITHIN 30 DAYS OF THE DATE CITY ENGINEEER SENDS CONTRACTOR WRITTEN NOTIFICATION, CITY CONTROLLER MAY DEDUCT FUNDS UP TO THE AMOUNT OWED FROM ANY PAYMENTS OWED TO CONTRACTOR UNDER THIS AGREEMENT, AND CONTRACTOR WAIVES ANY RECOURSE.

3.6 *PREVAILING WAGE RATES*

3.6.1 Contractor shall comply with governing statutes providing for labor classification of wage scales for each craft or type of laborer, worker, or mechanic.

3.6.2 Prevailing wage rates applicable to the Work may be one or a combination of the following wage rates identified in Division 00:

- 3.6.2.1 Federal Wage Rate General Decisions
  - 3.6.2.1.1 Highway Rates
  - 3.6.2.1.2 Building Rates
  - 3.6.2.1.3 Heavy Construction Rates
  - 3.6.2.1.4 Residential Rates
- 3.6.2.2 City Prevailing Wage Rates
  - 3.6.2.2.1 Building Construction Rates
  - 3.6.2.2.2 Engineering Construction Rates
  - 3.6.2.2.3 Asbestos Worker Rates

3.6.3 Each week Contractor shall submit to the City's Mayor's Office of Business Opportunity certified copies of payrolls showing classifications and wages paid by Contractor, Subcontractors, and Suppliers for each employee under the Contract, for any day included in the Contract.

3.7 *LABOR CONDITIONS*

3.7.1 In the event of labor disputes affecting Contractor or Contractor's employees, Contractor shall utilize all possible means to resolve disputes in order that the Work not be delayed to any extent. These means will include seeking injunctive relief and filing unfair labor practice charges, and any other action available to Contractor.

3.7.2 When Contractor has knowledge that any actual or potential labor dispute is delaying or is threatening to delay timely performance of the Work, Contractor shall immediately notify City Engineer in writing. No Claims will be accepted by City Engineer for costs incurred as a result of jurisdictional or labor disputes.

3.8 *DRUG DETECTION AND DETERRENCE*

3.8.1 It is the policy of the City to achieve a drug-free work force and to provide a workplace that is free from the use of illegal drugs and alcohol. It is also the policy of the City that manufacture, distribution, dispensation, possession, sale, or use of illegal drugs or alcohol by contractors while on the City's premises is prohibited. By executing the Contract, Contractor represents and certifies that it meets and will comply with all requirements and procedures set forth in the Mayor's Policy on Drug Detection and Deterrence, City Council Motion No. 92-1971 ("Mayor's Policy") and the Mayor's Drug Detection and Deterrence Procedures for Contractors, Executive Order No. 1-31, (Revised) ("Executive Order"). Mayor's Policy is on file in the office of the City Secretary. Copies of Executive Order may be obtained at the location specified in the Advertisement for Bids.

3.8.1.1 The Executive Order applies to the City's contracts for labor or services except the following:

- 3.8.1.1.1 contracts authorized by Emergency Purchase Orders,
- 3.8.1.1.2 contracts in which imposition of requirements of the Executive Order would exclude all potential bidders or proposers, or would eliminate meaningful competition for the Contract,
- 3.8.1.1.3 contracts with companies that have fewer than 15 employees during any 20-week period during a calendar year and no safety impact positions,
- 3.8.1.1.4 contracts with non-profit organizations providing services at no cost or reduced cost to the public, and
- 3.8.1.1.5 contracts with federal, state, or local governmental entities.

3.8.1.2 Prior to execution of the Contract, Contractor shall have filed with the City:

- 3.8.1.2.1 a Drug Policy Compliance Agreement form (Attachment "A" to the Executive Order), and
- 3.8.1.2.2 a copy of Contractor's drug free workplace policy, and
- 3.8.1.2.3 a written designation of all safety impact positions, if applicable, or a Contractor's Certification of a No Safety Impact Positions form (Attachment "C" to the Executive Order).

3.8.1.3 Every six months during performance of the Contract and upon completion of the Contract, Contractor shall file a Drug Policy Compliance Declaration form (Attachment "B" to the Executive Order). The Contractor shall submit the Drug Policy Compliance Declaration within 30 days of expiration of each six-month period of performance and within 30 days of completion of the Contract. The first six-month period shall begin on Date of Commencement of the Work.

3.8.1.4 Contractor shall have a continuing obligation to file updated designation of safety impact positions when additional safety impact positions are added to Contractor's employee workforce during performance of the Work.

3.8.1.5 Contractor shall require its Subcontractors and Suppliers to comply with the Mayor's Policy and Executive Order. Contractor is responsible for securing and maintaining required documents from Subcontractors and Suppliers for the City inspection throughout the term of the Contract.

3.8.1.6 Failure of Contractor to comply with requirements will be a material breach of the Contract entitling the City to terminate in accordance with Section 14.1.

3.9 *MATERIALS & EQUIPMENT*

3.9.1 Unless otherwise provided in the Contract, Contractor shall provide and assume full responsibility for Products, labor, transportation, construction equipment and machinery, tools, appliances, fuel, power, light, heat, telephone, water, sanitary facilities, transportation, temporary facilities, supplies, and other facilities and incidentals necessary for Furnishing, performing, testing, starting-up, and completing the Work.

3.9.1.1 Contractor, Subcontractors, and Suppliers shall use Ultra Low Sulfur Diesel Fuel in all diesel operating vehicles and motorized equipment utilized in performing the Work. Ultra Low Sulfur Diesel Fuel is defined as diesel fuel having 15 ppm or the applicable standard set by state or federal law or rules and regulations of the Texas Commission on Environmental Quality, or the Environmental Protection Agency, whichever is less in sulfur content. Off-road Ultra Low Sulfur Diesel Fuel may be used in lieu of on-road Ultra Low Sulfur Diesel Fuel. Contractor shall provide, upon request by City Engineer, proof that Contractor, Subcontractors, and Suppliers are using Ultra Low Sulfur Diesel Fuel.

3.9.2 Contractor shall provide Products that are:

3.9.2.1 new, unless otherwise required or permitted by the Contract, and

3.9.2.2 of specified quality.

If required by City Engineer, Contractor shall furnish satisfactory evidence, including reports of required tests, as to kind and quality of Products.

3.9.3 Contractor shall store Products in a safe, neat, compact, and protected manner. Contractor shall also store Products delivered during the work, along the right-of-way:

3.9.3.1 so as to cause the least inconvenience to property owners, tenants, and general public; and

3.9.3.2 so as not to block access to, or be closer than, three feet to any fire hydrant.

Contractor shall protect trees, lawns, walks, drives, streets, and other improvements that are to remain, from damage. If private or public property is damaged by Contractor, Contractor shall, at its sole expense, restore the damaged property to at least its original condition.

3.9.3.1 Contractor shall obtain City Engineer's approval for storage areas used for Products for which payment has been requested under Paragraph 9.6.1. Contractor shall provide the City access to the storage areas for inspection purposes. Products, once paid for by the City, become the property of the City and may not be removed from place of storage, without City Engineer's written permission except for a movement to the site. Contractor's Installation Floater, required under Section 11.2, shall cover all perils, including loss or damage to Products during storage, loading, unloading, and transit to the site.

3.10 *PRODUCT OPTIONS AND SUBSTITUTIONS*

3.10.1 For Products specified by reference standards or by description only, Contractor may provide any Product meeting those standards or description.

3.10.2 For Products specified by naming one or more manufacturers with provision for substitutions or equal, Contractor may submit a request for substitution for any manufacturer not named.

3.10.3 City Engineer will consider requests for substitutions only within the first 15 percent of Contract Time, or first 90 days after date of Notice to Proceed, whichever is less.

3.10.4 Contractor shall document each request for substitution with complete data

substantiating compliance of proposed substitution with the Contract.

3.10.5 A request for substitution constitutes a representation that Contractor:

3.10.5.1 has investigated the proposed Product and determined that it meets or exceeds the quality level of the specified Product;

3.10.5.2 shall provide the same warranty for the substitution as for the specified Product;

3.10.5.3 shall coordinate installation of the proposed substitution and make changes to other work which may be required for the Work to be completed, with no additional cost or increase in time to the City;

3.10.5.4 confirms that cost data is complete and includes all related costs under the Contract;

3.10.5.5 waives Claim for additional costs or time extensions that may subsequently become apparent; and

3.10.5.6 shall provide review or redesign services by a design consultant with appropriate professional license and shall obtain re-approval and permits from authorities.

3.10.6 City Engineer will not consider and will not approve substitutions when:

3.10.6.1 they are indicated or implied on Shop Drawing or Product Data submittals without separate written request; or

3.10.6.2 acceptance will require revision to the Contract.

3.10.7 City Engineer may reject requests for substitution, and his decision will be final and binding on the Parties.

3.11 *CASH ALLOWANCES*

3.11.1 Contract Price includes Cash Allowances as identified in the Contract.

3.11.2 The City will pay the actual costs of Cash Allowance item exclusive of profit, overhead or administrative costs. If actual costs exceed the Cash Allowance, City Engineer must approve a Change Order for the additional costs.

3.12 *WARRANTY*

3.12.1 Contractor warrants to the City that Products furnished under the Contract are:

3.12.1.1 free of defects in title;

3.12.1.2 of good quality; and

3.12.1.3 new, unless otherwise required or permitted by the Contract.

If required by the City Engineer, Contractor shall furnish satisfactory evidence as to kind, quality and title of Products, and that Products conform to requirements of the Contract.

3.12.2 In the event of a defect in a Product, either during construction or warranty period, Contractor shall take appropriate action with manufacturer of Product to assure correction or replacement of defective Product with minimum delay.

3.12.3 Contractor warrants that the Work is free of defects not inherent in the quality required or permitted, and that the Work does conform with the requirements of the Contract. Contractor further warrants that the Work has been performed in a thorough and workmanlike manner.

3.12.4 Contractor warrants that the Work is free of concentrations on polychlorinated biphenyl (PCB) and other substances defined as hazardous by the Comprehensive Environmental Response Compensation and Liability Act (CERCLA) or any other applicable law or regulation.

3.12.5 Work not conforming to requirements of Section 3.12, including substitutions not properly approved and authorized, may be considered nonconforming work.

3.12.6 Contractor's warranty excludes remedy for damage or defect caused by:

3.12.6.1 improper or insufficient maintenance by the City;

3.12.6.2 normal wear and tear under normal usage; or

3.12.6.3 claim that hazardous material was incorporated into the Work, if that material was specified in the Contract.

3.12.7 Contractor warrants that title to all work covered by Contractor's request for payment passes to the City upon incorporation into the Work or upon Contractor's receipt of payment, whichever occurs first. The Contractor further warrants that the title is free of all liens, claims, security interests or other interests ("Encumbrances"). If not, upon written demand from City Engineer, Contractor shall immediately take legal action necessary to remove Encumbrances.

3.13 *TAXES*

3.13.1 Contractor shall pay all sales, consumer, use, and similar taxes, which are in effect or scheduled to go into effect on or before bids are received, related to work provided by Contractor.

3.13.2 Contractor shall obtain, and require Subcontractors and Suppliers to obtain, necessary permits from the state and local taxing authorities to perform contractual obligations under the Contract, including sales tax permits.

3.13.3 The City is exempt from the Federal Transportation and Excise Tax. Contractor shall comply with federal regulations governing the exemptions.

3.13.4 Products incorporated into the Work are exempt from state sales tax according to provisions of the TEX. TAX CODE ANN. CH. 151, Subsection H.

3.14 *PERMITS, FEES, AND NOTICES*

3.14.1 Unless otherwise provided in the Contract, Contractor shall secure and pay for all construction permits, licenses, and inspections:

3.14.1.1 necessary for proper execution and completion of the Work; and

3.14.1.2 legally required at time bids are received.

3.15 *CONSTRUCTION SCHEDULES*

3.15.1 On receipt of Notice to Proceed, Contractor shall promptly prepare and submit construction schedule for the Work for City Engineer's review. The schedule must reflect the minimum time required to complete the Work not to exceed Contract Time.

3.15.2 Contractor shall give 24-hour written notice to City Engineer before commencing work or resuming work where work has been stopped. Contractor shall also give the same notice to inspectors.

3.15.3 Contractor shall incorporate milestones specified in Summary of Work Specification into the construction schedule. Contractor's failure to meet a milestone, as determined by City Engineer, may be considered a material breach of the Contract.

3.15.4 Each month, Contractor shall submit to City Engineer a copy of an updated construction schedule indicating actual progress, incorporating applicable changes, and indicating courses of action required to assure completion of the Work within Contract Time.

3.15.5 Contractor shall keep a current schedule of submittals that coordinates with the construction schedule, and shall submit the initial schedule of submittals to City Engineer for approval.

3.16 *DOCUMENTS AND SAMPLES AT THE SITE*

3.16.1 Contractor shall maintain at the site, and make available to City Engineer, one record copy of Drawings, Specifications, and Modifications. Contractor shall maintain the documents in good order and marked currently to record changes and selections made during construction. In addition, Contractor shall maintain at the site, approved Shop Drawings, Product Data, Samples, and similar submittals, which will be delivered to City Engineer prior to final inspection as required in Paragraph 9.11.4.

3.16.2 Contractor shall maintain all books, documents, papers, accounting records, and other relevant documentation pursuant to the Work and shall make the books, documents, papers, and accounting records available to representatives of the City for review and audits during the Contract term and for the greater of three years following Date of Substantial Completion or until all litigation or audits are fully resolved.

3.16.3 Contractor shall provide to City Attorney all documents and records that City Attorney deems necessary to assist in determining Contractor's compliance with the Contract, with the exception of those documents made confidential by federal or state law or regulation.

3.17 *MANUFACTURER'S SPECIFICATIONS*

3.17.1 Contractor shall handle, store, and Install Products and perform all work in the manner required by Product manufacturer. Should the Contract and manufacturer's instructions conflict, Contractor shall report conflict to City Engineer for resolution prior to proceeding with the affected work.

3.17.2 References in the Contract to the manufacturer's specifications, directions, or recommendations, mean manufacturer's current published documents in effect as of date of receipt of bids, or in the case of a Modification, as of date of Modification.

3.18 SHOP DRAWINGS, PRODUCT DATA, AND SAMPLES

3.18.1 Shop Drawings, Product Data, and Samples are not part of the Contract. The purpose of Contractor submittals is to demonstrate, for those portions of the Work for which submittals are required, the way Contractor proposes to conform to information given and design concept expressed in the Contract.

3.18.2 Contractor shall submit to Project Manager for review the Shop Drawings, Product Data, and Samples, which are required by the Contract. Review by Project Manager is subject to limitations of Paragraph 4.1.4. Contractor shall transmit the submittals to the Project Manager with reasonable promptness and in a sequence, so as to cause no delay in the Work or in activities of the City or of separate contractors. Contractor shall transmit submittals in time to allow a minimum of 30 days for Project Manager's review prior to date Contractor needs reviewed submittals returned. This time may be shortened for a particular job requirement if approved by Project Manager in advance of submittal.

3.18.3 Contractor shall certify that the content of submittals conforms to the Contract without exception by affixing Contractor's approval stamp and signature. By certifying and submitting Shop Drawings, Product Data, and Samples, Contractor represents, and Contractor's stamp of approval shall state, that Contractor has determined and verified materials, quantities, field measurements, and field construction criteria related to the submittal, and has checked and coordinated information contained within the submittals with requirements of the Contract.

3.18.4 Contractor may not perform any work requiring submittal and review of Shop Drawings, Product Data, or Samples until the submittal has been returned with appropriate review decision by the Project Manager. Contractor shall perform work in accordance with the review.

3.18.5 If Contractor performs any work requiring submittals prior to review and acceptance of the submittals by Project Manager, such work is at Contractor's risk and the City is not obligated to accept work if the submittals are later found to be unacceptable.

3.18.6 If, in the opinion of Project Manager, the submittals are incomplete, or demonstrate an inadequate understanding of the Work or lack of review by the Contractor, then submittals may be returned to the Contractor for correction and resubmittal.

3.18.7 Contractor shall direct specific attention in writing and on the resubmitted Shop Drawings, Product Data, or Samples to any additional proposed revisions, other than those revisions requested by Project Manager on previous submittals.

3.18.8 Contractor is not relieved of responsibility for deviations from requirements of the Contract by Project Manager's review of Shop Drawings, Product Data, or Samples unless Contractor has specifically informed Project Manager in writing of the deviation at the time of the submittal, and Project Manager has given written approval of the deviation.

3.18.9 When professional certification of performance criteria of Products is required by the Contract, the City may rely upon accuracy and completeness of the calculations and certifications.

3.18.10 For Product colors or textures to be selected by the City, Contractor shall submit all samples together to allow preparation of a complete selection schedule.

3.18.11 Contractor shall submit informational submittals, on which Project Manager is not expected to take responsive action, as required by the Contract.

3.18.12 Submittals made by Contractor which are not required by the Contract may be returned to Contractor without action.

3.19 CULTURAL RESOURCES AND ENDANGERED SPECIES

3.19.1 Contractor may not remove or disturb, or cause to be removed or disturbed, any historical, archaeological, architectural, or other cultural artifacts, relics, vestiges, remains, or objects of antiquity. If Contractor discovers one of these items, Contractor shall immediately notify City Engineer and further comply with the requirements of 13 Tex. Admin. Code Chs. 25 and 26 (2002), or successor regulation. Contractor shall protect site and cultural resources from further disturbance until professional examination can be made or until clearance to proceed is authorized in writing by City Engineer.

3.19.2 Should either threatened or endangered plant or animal species be encountered,

Contractor shall cease work immediately in the area of encounter and notify City Engineer.

3.20 *CUTTING AND PATCHING*

3.20.1 Contractor is responsible for necessary cutting, fitting, and patching to accomplish the Work and shall suitably support, anchor, attach, match, and trim or seal materials to work of other contractors. Contractor shall coordinate the Work with work of other contractors to minimize conflicts, as provided in Article 6.

3.20.2 Contractor may not endanger work by cutting, digging, or other action, and may not cut or alter work of other contractors except by written consent of City Engineer and affected contractor.

3.21 *CLEANING*

3.21.1 Contractor shall perform daily cleanup of all dirt, debris, scrap materials and other disposable items resulting from Contractor's operations, whether on-site or off-site. Unless otherwise authorized in writing by City Engineer, Contractor shall keep all streets, access streets, driveways, areas of public access, walkways, and other designated areas clean and open at all times.

3.21.2 Failure of Contractor to maintain a clean site, including access streets, is the basis for City Engineer to issue a Notice of Noncompliance. Should compliance not be attained within the time period in the Notice of Noncompliance, City Engineer may authorize necessary cleanup to be performed by others and the cost of the cleanup will be deducted from monies due Contractor.

Contractor shall legally dispose off-site, all waste materials and other excess materials resulting from Contractor's operations.

3.22 *SANITATION*

3.22.1 Contractor shall provide and maintain sanitary facilities at site for use of all construction forces under the Contract. Newly-constructed or existing sanitary facilities may not be used by Contractor.

3.23 *ACCESS TO WORK AND TO INFORMATION*

3.23.1 Contractor shall provide the City, Design Consultant, testing laboratories, and governmental agencies which have jurisdictional interests, access to the Work in preparation and in progress wherever located. Contractor shall provide proper and safe conditions for the access.

3.23.2 If required by City Engineer, Contractor shall furnish information concerning character of Products and progress and manner of the Work, including information necessary to determine cost of the Work, such as number of employees, pay of employees, and time employees worked on various classes of the Work.

3.24 *TRADE SECRETS*

3.24.1 Contractor will not make any claim of ownership of trade secrets as to products used in the Work, or preparation of any mixture for the Work. City Engineer will at all times have the right to demand and Contractor shall furnish information concerning materials or samples of ingredients of any materials used, or proposed to be used, in preparation of concrete placed or other work to be done. Mixtures, once agreed on, shall not be changed in any manner without knowledge and consent of City Engineer. The City will make its best efforts to protect confidentiality of proprietary information.

3.25 *INDEMNIFICATION*

3.25.1 CONTRACTOR AGREES TO AND SHALL DEFEND, INDEMNIFY, AND HOLD THE CITY, ITS AGENTS, EMPLOYEES, OFFICERS, AND LEGAL REPRESENTATIVES (COLLECTIVELY THE "CITY") HARMLESS FOR ALL CLAIMS, CAUSES OF ACTION, LIABILITIES, FINES, AND EXPENSES (INCLUDING, WITHOUT LIMITATION, ATTORNEYS' FEES, COURT COSTS, AND ALL OTHER DEFENSE COSTS AND INTEREST) FOR INJURY, DEATH, DAMAGE, OR LOSS TO PERSONS OR PROPERTY SUSTAINED IN CONNECTION WITH OR INCIDENTAL TO PERFORMANCE UNDER THE CONTRACT INCLUDING, WITHOUT LIMITATION, THOSE CAUSED BY:

3.25.1.1 CONTRACTOR'S AND/OR ITS AGENTS', EMPLOYEES', OFFICERS', DIRECTORS', CONTRACTORS', OR SUBCONTRACTORS' (COLLECTIVELY IN NUMBERED SUBPARAGRAPHS .1 through .3, "CONTRACTOR") ACTUAL OR ALLEGED NEGLIGENCE OR INTENTIONAL ACTS OR OMISSIONS;

3.25.1.2 THE CITY'S AND CONTRACTOR'S ACTUAL OR ALLEGED CONCURRENT NEGLIGENCE, WHETHER CONTRACTOR IS IMMUNE FROM LIABILITY OR NOT;

3.25.1.3 THE CITY'S AND CONTRACTOR'S ACTUAL OR ALLEGED STRICT PRODUCTS LIABILITY OR STRICT STATUTORY LIABILITY, WHETHER CONTRACTOR IS IMMUNE FROM LIABILITY OR NOT.

CONTRACTOR SHALL DEFEND, INDEMNIFY, AND HOLD THE CITY HARMLESS DURING THE TERM OF THE CONTRACT AND FOR FOUR YEARS AFTER THE CONTRACT TERMINATES. CONTRACTOR SHALL NOT INDEMNIFY THE CITY FOR THE CITY'S SOLE NEGLIGENCE.

3.25.2 NOTWITHSTANDING ANYTHING TO THE CONTRARY, THE LIABILITY OF CONTRACTOR FOR THE CITY'S CONCURRENT NEGLIGENCE SHALL NOT EXCEED $1,000,000.

3.26 *RELEASE AND INDEMNIFICATION – PATENT, COPYRIGHT, TRADEMARK, AND TRADE SECRET INFRINGEMENT*

3.26.1 UNLESS OTHERWISE SPECIFICALLY REQUIRED BY THE CONTRACT, CONTRACTOR AGREES TO AND SHALL RELEASE AND DEFEND, INDEMNIFY, AND HOLD HARMLESS THE CITY, ITS AGENTS, EMPLOYEES, OFFICERS, AND LEGAL REPRESENTATIVES (COLLECTIVELY THE "CITY") FROM ALL CLAIMS OR CAUSES OF ACTION BROUGHT AGAINST THE CITY BY ANY PARTY, INCLUDING CONTRACTOR, ALLEGING THAT THE CITY'S USE OF ANY EQUIPMENT, SOFTWARE, PROCESS, OR DOCUMENTS CONTRACTOR FURNISHES DURING THE TERM OF THE CONTRACT INFRINGES ON A PATENT, COPYRIGHT, OR TRADEMARK, OR MISAPPROPRIATES A TRADE SECRET. CONTRACTOR SHALL PAY ALL COSTS (INCLUDING, WITHOUT LIMITATION, ATTORNEYS' FEES, COURT COSTS, AND ALL OTHER DEFENSE COSTS, AND INTEREST) AND DAMAGES AWARDED.

3.26.2 CONTRACTOR SHALL NOT SETTLE ANY CLAIM ON TERMS WHICH PREVENT THE CITY FROM USING THE EQUIPMENT, SOFTWARE, PROCESS, OR PRODUCT WITHOUT THE CITY ENGINEER'S PRIOR WRITTEN CONSENT.

3.26.3 UNLESS OTHERWISE SPECIFICALLY REQUIRED BY THE CONTRACT, WITHIN 60 DAYS AFTER BEING NOTIFIED OF THE CLAIM, CONTRACTOR SHALL, AT ITS OWN EXPENSE, EITHER:

3.26.3.1 OBTAIN FOR THE CITY THE RIGHT TO CONTINUE USING THE EQUIPMENT, SOFTWARE, PROCESS, OR PRODUCT, OR

3.26.3.2 IF BOTH PARTIES AGREE, REPLACE OR MODIFY THEM WITH COMPATIBLE AND FUNCTIONALLY EQUIVALENT PRODUCTS.

IF NONE OF THESE ALTERNATIVES IS REASONABLY AVAILABLE, THE CITY MAY RETURN THE EQUIPMENT, SOFTWARE, OR PRODUCT, OR DISCONTINUE THE PROCESS, AND CONTRACTOR SHALL REFUND THE PURCHASE PRICE.

3.27 *INDEMNIFICATION PROCEDURES*

3.27.1 *Notice of Indemnification Claims:* If the City or Contractor receives notice of any claim or circumstances which could give rise to an indemnified loss, the receiving party shall give written notice to the other Party within 10 days. The notice must include the following:

3.27.1.1 a description of the indemnification event in reasonable detail,

3.27.1.2 the basis on which indemnification may be due, and

3.27.1.3 the anticipated amount of the indemnified loss.

This notice does not estop or prevent the City from later asserting a different basis for indemnification or a different amount of indemnified loss than that indicated in the initial notice. If the City does not provide this notice within the 10-day period, it does not waive any right to indemnification except to the extent that Contractor is prejudiced, suffers loss, or incurs expense because of the delay.

3.27.2 *Defense of Indemnification Claims:*

3.27.2.1 *Assumption of Defense:* Contractor may assume the defense of the claim at its own expense with counsel chosen by it that is reasonably satisfactory to the City. Contractor shall then control the defense and any negotiations to settle the claim. Within 10 days after receiving written notice of the indemnification request, Contractor must advise the City as to whether or not it will defend the claim. If Contractor does not assume the defense, the City shall assume and control the defense, and all defense expenses constitute an indemnified loss.

3.27.2.2 *Continued Participation:* If Contractor elects to defend the claim, the City may

retain separate counsel to participate in, but not control, the defense and to participate in, but not control, any settlement negotiations. Contractor may settle the claim without the consent or agreement of the City, unless it:

3.27.2.2.1 would result in injunctive relief or other equitable remedies or otherwise require the City to comply with restrictions or limitations that adversely affect the City;

3.27.2.2.2 would require the City to pay amounts that Contractor does not fund in full; or

3.27.2.2.3 would not result in the City's full and complete release from all liability to the plaintiffs or claimants who are parties to or otherwise bound by the settlement.

3.28 *CONTRACTOR DEBT*

IF CONTRACTOR, AT ANY TIME DURING THE TERM OF THIS AGREEMENT, INCURS A DEBT, AS THE WORD IS DEFINED IN SECTION 15-122 OF THE HOUSTON CITY CODE OF ORDINANCES, IT SHALL IMMEDIATELY NOTIFY CITY CONTROLLER IN WRITING. IF CITY CONTROLLER BECOMES AWARE THAT CONTRACTOR HAS INCURRED A DEBT, IT SHALL IMMEDIATELY NOTIFY CONTRACTOR IN WRITING. IF CONTRACTOR DOES NOT PAY THE DEBT WITHIN 30 DAYS OF EITHER SUCH NOTIFICATION, CITY CONTROLLER MAY DEDUCT FUNDS IN AN AMOUNT EQUAL TO THE DEBT FROM ANY PAYMENTS OWED TO CONTRACTOR UNDER THIS AGREEMENT, AND CONTRACTOR WAIVES ANY RECOURSE THEREFOR. CONTRACTOR SHALL FILE A NEW AFFIDAVIT OF OWNERSHIP, USING THE FORM DESIGNATED BY CITY, BETWEEN FEBRUARY 1 AND MARCH 1 OF EVERY YEAR DURING THE TERM OF THE CONTRACT.

ARTICLE 4 - ADMINISTRATION OF THE CONTRACT

4.1 *CONTRACT ADMINISTRATION*

4.1.1 City Engineer will provide administration of the Contract and City Engineer is authorized to issue Change Orders, Work Change Directives, and Minor Changes in the Work.

4.1.2 City Engineer may act through Project Manager, Design Consultant, or Inspector. When the term "City Engineer" is used in the Contract, action by City Engineer is required unless City Engineer delegates his authority in writing. The City Engineer may not delegate authority to render decisions under Section 4.4.

The City does not have control over or charge of, and is not responsible for, supervision, construction, and safety procedures enumerated in Section 3.3. The City does not have control over or charge of and is not responsible for acts or omissions of Contractor, Subcontractors, or Suppliers.

4.1.3 The City and Design Consultant may attend project meetings and visit the site to observe progress and quality of the Work. The City and Design Consultant are not required to make exhaustive or continuous on-site inspections to check quality or quantity of the Work.

4.1.4 Project Manager will review and approve or take other appropriate action on Contractor's submittals, but only for limited purpose of checking for conformance with information given and design concept expressed in the Contract.

4.1.5 Project Manager's review of the submittals is not conducted for purpose of determining accuracy and completeness of other details, such as dimensions and quantities, or for substantiating instructions for installation or performance of Products, all of which remain the responsibility of Contractor.

4.1.6 Project Manager's review of submittals does not relieve Contractor of its obligations under Sections 3.3, 3.12, and 3.18. Review does not constitute approval of safety precautions or, unless otherwise specifically stated by Project Manager in writing, of construction means, methods, techniques, sequences, or procedures. Project Manager's review of a specific item does not indicate approval of an assembly of which the item is a component.

4.1.7 Based on field observations and evaluations, Project Manager will process Contractor's progress payments, certify amounts due Contractor, and issue Certificates for Payment in the amount certified.

4.1.8 Project Manager will receive and forward to City Engineer for his review and records, written warranties and related documents required by the Contract and assembled by Contractor.

4.1.9 Upon written request by Contractor or Project Manager, City Engineer will resolve matters of interpretation of or performance of the Contract, which are not Claims. City Engineer's decisions are final and binding on the Parties.

4.1.10 City Engineer may reject work which does not conform to the Contract.

4.1.11 When City Engineer considers it necessary to implement the intent of the Contract, City Engineer may require additional inspection or testing of work in accordance with Paragraphs 13.6.3 and 13.6.4, whether such work is fabricated, Installed, or completed.

4.2 *COMMUNICATIONS IN ADMINISTRATION OF THE CONTRACT*

4.2.1 Except as otherwise provided in the Contract or when authorized by City Engineer in writing, Contractor shall communicate with Project Manager. Contractor shall communicate with Design Consultant, Design Consultant's subconsultants, and separate contractors through Project Manager. The City will communicate with Subcontractors and Suppliers through Contractor.

4.3 *CLAIMS AND DISPUTES*

4.3.1 *Documentation by Project Manager:* Contractor shall submit Claims, including those alleging an error or omission by Project Manager or Design Consultant, to Project Manager for documentation and recommendation to City Engineer.

4.3.2 *Decision of City Engineer:* Upon submission of Claim by Project Manager or Contractor, City Engineer will resolve Claims in accordance with Section 4.4.

4.3.3 *Time Limits on Claims:* Claims by Contractor must be made within 90 days after occurrence of event giving rise to the Claim.

4.3.4 *Continuing the Contract Performance:* Pending final resolution of a Claim including referral to non-binding mediation, unless otherwise agreed in writing, Contractor shall proceed diligently with the performance of the Contract and the City will continue to make payments in accordance with the Contract.

4.3.4.1 Pending final resolution of a Claim including referral to non-binding mediation, Contractor is responsible for safety and protection of physical properties and conditions at site.

4.3.5 *Claims for Concealed or Unknown Conditions:* Concealed or unknown physical conditions include utility lines, other man-made structures, storage facilities, Pollutants and Pollutant Facilities, and the like, but do not include conditions arising from Contractor operations, or failure of Contractor to properly protect and safeguard subsurface facilities. Concealed conditions also include naturally-occurring soil conditions outside the range of soil conditions identified through geotechnical investigations, but do not include conditions arising from groundwater, rain, or flood.

4.3.5.1 If conditions are encountered at the site which are Underground Facilities or otherwise concealed or unknown conditions which differ materially from:

4.3.5.1.1 those indicated by the Contract; or

4.3.5.1.2 conditions which Contractor could have discovered through site inspection, geotechnical testing, or otherwise;

then Contractor will give written notice to City Engineer no later than five days after Contractor's first observation of the condition and before condition is disturbed. Contractor's failure to provide notice constitutes a waiver of a Claim.

4.3.5.2 City Engineer will promptly investigate concealed or unknown conditions. If City Engineer determines that conditions at the site are not materially different and that no change in Contract Price or Contract Time is justified, City Engineer will notify Contractor in writing, stating reasons. If City Engineer determines the conditions differ materially and cause increase or decrease in Contractor's cost or time required for performance of part of the Work, City Engineer will recommend an adjustment in Contract Price or Contract Time, or both, as provided in Article 7. Opposition by a Party to the City Engineer's determination must be made within 21 days after City Engineer has given notice of the decision. If the Parties cannot agree on adjustment to Contract Price or Contract Time, adjustment is subject to further proceedings pursuant to Section 4.4.

4.3.6 *Claims for Additional Cost:* If Contractor wishes to make a Claim for increase in Contract Price, Contractor shall give written notice before proceeding with work for which Contractor intends to submit a Claim. Prior notice is not required for Claims relating to an emergency

endangering life or property arising under Section 10.4.

4.3.6.1 Contractor may file a Claim in accordance with Section 4.4 if Contractor believes it has incurred additional costs, for the following reasons:

- 4.3.6.1.1 written interpretation of City Engineer;
- 4.3.6.1.2 order by City Engineer to stop the Work when Contractor is not at fault;
- 4.3.6.1.3 suspension of the Work by City Engineer;
- 4.3.6.1.4 termination of the Contract by City Engineer; or
- 4.3.6.1.5 The City's non-compliance with another provision of the Contract.

4.3.6.2 No increase in Contract Price is allowed for delays or hindrances to the Work, except for direct and unavoidable extra costs to Contractor caused by failure of the City to provide information and services, or to make land and materials available, when required of the City under the Contract. Any increase claimed is subject to the provisions of Section 4.4 and Article 7.

4.3.6.3 The City is not liable for Claims for delay when Date of Substantial Completion occurs prior to expiration of Contract Time.

4.3.7 *Claims for Additional Time:* If Contractor wishes to make a Claim for an increase in Contract Time, Contractor shall give written notice as provided in Section 8.2. In case of continuing delay, only one Claim is necessary.

4.4 *RESOLUTION OF CLAIMS AND DISPUTES*

4.4.1 City Engineer will review Claims and take one or more of the following preliminary actions within 30 days of receipt of Claim:

- 4.4.1.1 submit a suggested time to meet and discuss the Claim with City Engineer;
- 4.4.1.2 reject Claim, in whole or in part, stating reasons for rejection;
- 4.4.1.3 recommend approval of the Claim by the other Party;
- 4.4.1.4 suggest a compromise; or
- 4.4.1.5 take other actions as City Engineer deems appropriate to resolve the Claim.

4.4.2 City Engineer may request additional supporting data from claimant. Party making Claim shall, within 10 days after receipt of City Engineer's request, submit additional supporting data requested by City Engineer.

4.4.3 At any time prior to rendering a written decision regarding a Claim, City Engineer may refer Claim to non-binding mediation. If Claim is resolved, City Engineer will prepare and obtain all appropriate documentation. If Claim is not resolved, City Engineer will take receipt of Claim and begin a new review under Section 4.4.

4.4.4 If Claim is not referred to or settled in non-binding mediation, City Engineer may conduct a hearing and will render a written decision, including findings of fact, within 75 days of receipt of Claim, or a time mutually agreed upon by the Parties in writing. City Engineer may notify Surety and request Surety's assistance in resolving Claim. City Engineer's decision is final and binding on the Parties.

4.5 *CONDITION PRECEDENT TO SUIT; WAIVER OF ATTORNEY FEES AND INTEREST*

4.5.1 Neither the City nor Contractor may recover attorney fees for any claim brought in connection with this Contract.

4.5.2 Neither the City nor the Contractor may recover interest for any damages claim brought in connection with this Contract except as allowed by TEXAS LOCAL GOVERNMENT CODE Chapter 2251.

4.6 *INTERIM PAYMENT WAIVER & RELEASE*

4.6.1 In accordance with section 4.3, the Contractor shall use due diligence in the discovery and submission of any Claim against the City related to the Contractor's work.

4.6.2 The Contractor shall submit any Claim to the City not later than the 90th day after the occurrence of the event giving rise to the Claim.

4.6.3 Any failure to timely comply with the requirements of section 4.6.2 waives and releases any Claim when the Contractor submits an application for payment after the 90th day.

4.6.4 This waiver does not cover any retainage. In case of any conflict of law, this language shall be revised to the minimum extent necessary to avoid legal conflict. This waiver is made specifically for the benefit of the City.

ARTICLE 5 - SUBCONTRACTORS AND SUPPLIERS

5.1 *AWARD OF SUBCONTRACTS OTHER CONTRACTS FOR PORTIONS OF THE WORK*

5.1.1 Contractor may not contract with a Subcontractor, Supplier, person, or entity that City Engineer has made a reasonable and timely objection to.

5.1.2 If City Engineer has a reasonable objection to person or entity proposed by Contractor, Contractor shall propose another with whom City Engineer has no reasonable objection.

5.1.3 Contractor shall execute contracts with approved Subcontractors, Suppliers, persons, or entities before the Subcontractors or Suppliers begin work under the Contract. All such contracts must be executed and sent to the OBO Director and Contracting Department within 30 days after the date of the Notice to Proceed and must include provisions set forth in Articles 3 and 5 of this Document.

5.1.4 Contractor shall notify City Engineer in writing of any proposed change of Subcontractor, Supplier, person, or entity previously accepted by the City.

5.1.5 Contractor shall make timely payments to Subcontractors and Suppliers for performance of the Contract. Contractor shall protect, defend, and indemnify the City from any claim or liability arising out of Contractor's failure to make the payments. Disputes relating to payment of Business Enterprise Subcontractors or Suppliers will be submitted to arbitration in same manner as other disputes under Business Enterprise subcontracts. Failure of Contractor to comply with decisions of arbitrator may be determined by City Engineer a material breach leading to termination of the Contract.

5.2 *CONTRACTOR RESPONSIBILITY FOR SUBCONTRACTORS*

5.2.1 Contractor is responsible to the City, as may be required by laws and regulations, for all acts and omissions of Subcontractors, Suppliers, and other persons and organizations performing or furnishing any of the Work under direct or indirect contract with Contractor.

5.2.2 Contractor shall make available to each proposed Subcontractor, prior to execution of subcontract, copies of the Contract to which Subcontractor is bound by this Section 5.2. Contractor shall notify Subcontractor of any terms of proposed subcontract which may be at variance with the Contract.

5.2.3 The City's approval of Subcontractor or Suppliers does not relieve Contractor of its obligation to perform, or to have performed to the full satisfaction of the City, the Work required by the Contract.

5.2.4 Unless there is a contractual relationship between Contractor and a Subcontractor or Supplier to the contrary, Contractor shall withhold no more retainage from Subcontractors or Suppliers than City withholds from Contractor under this Agreement. However, once a Subcontractor or Supplier completes performance, Contractor shall release all retainage to that Subcontractor or Supplier regardless if City continues to retain under this Agreement.

5.2.5 Prior to a Subcontractor or Supplier commencing performance for Contractor, Contractor shall meet with that Subcontractor or Supplier to provide instructions on invoicing procedures, dispute resolution procedures, and statutory rights, such as claim filing procedures under the McGregor Act. Subcontractors and Suppliers must certify to the City Engineer that Contractor has fulfilled the requirements of this Section.

ARTICLE 6 - CONSTRUCTION BY THE CITY OR BY SEPARATE CONTRACTORS

6.1 *THE CITY'S RIGHT TO PERFORM CONSTRUCTION AND TO AWARD SEPARATE CONTRACTS*

6.1.1 The City may perform on-site construction operations related to the Work and as part of the Project with the City's workforce or with separate contractors.

6.2 *COORDINATION*

6.2.1 The City will coordinate activities of the City's workforce and of each separate contractor with work of Contractor, and Contractor shall cooperate with the City and separate contractors.

6.2.1.1 Contractor shall participate with other separate contractors and the City in reviewing their construction schedules when directed to do so by the Project Manager. Contractor shall make revisions to construction schedule and Contract Price deemed

necessary after joint review and mutual agreement. Construction schedules shall then constitute schedules to be used by Contractor, separate contractors, and the City, until subsequently revised.

6.2.2 Contractor shall afford to the City and to separate contractors reasonable opportunity for introduction and storage of their materials and equipment, and for performance of their activities.

6.2.3 If part of Contractor's work depends on proper execution of construction or operations by the City or a separate contractor, Contractor shall, prior to proceeding with that portion of the Work, inspect the other work and promptly report to City Engineer apparent discrepancies or defects in the other construction that would render it unsuitable for the proper execution of the Work. Failure of Contractor to report apparent discrepancies or defects in the other construction shall constitute acknowledgment that the City's or separate contractor's completed or partially completed construction is fit and proper to receive Contractor's work, except as to discrepancies or defects not then reasonably discoverable.

6.3 *MUTUAL RESPONSIBILITY*

6.3.1 The responsible party bears the costs caused by delays, by improperly timed activities, or by nonconforming construction.

6.3.2 Contractor shall promptly remedy damage caused by Contractor to completed or partially completed construction or to property of the City or separate contractor.

6.3.3 Claims or disputes between Contractor and other City contractors, or subcontractors of other City contractors, working on the Project must be submitted to binding arbitration in accordance with Construction Industry Arbitration Rules of the American Arbitration Association upon demand by any party to the dispute or by the City.

6.4 *THE CITY'S RIGHT TO CLEAN UP*

6.4.1 If dispute arises among Contractor, separate contractors, and the City as to responsibility under their respective contracts for maintaining premises and surrounding area free from waste materials and rubbish as described in Section 3.21, the City may clean up and allocate cost among those responsible, as determined by City Engineer.

ARTICLE 7 - CHANGES IN THE WORK

7.1 *CHANGES*

7.1.1 Changes in scope of the Work, subject to limitations in Article 7 and elsewhere in the Contract, may be accomplished without invalidating the Contract, or without notifying Surety by:

7.1.1.1 Change Order;
7.1.1.2 Work Change Directive; or
7.1.1.3 Minor Change in the Work.

7.1.2 The following types of Change Orders require City Council approval:

7.1.2.1 a single Change Order that exceeds five percent of Original Contract Price,

7.1.2.2 a Change Order which, when added to previous Change Orders, exceeds five percent of Original Contract Price,

7.1.2.3 a Change Order, in which the total value of increases outside of the general scope of work approved by City Council, when added to increases outside the general scope of work approved by City Council in previous Change Orders, exceeds 40 percent of the Original Contract Price, even if the net increase to the Original Contract Price is five percent or less.

In this context, "increase" means an increase in quantity resulting from the addition of locations not within the scope of work approved by City Council, or the addition of types of goods or services not bid as unit price items.

Nothing in this Section is intended to permit an increase of the Contract Price in excess of the limit set out in TEX. LOC. GOV'T CODE ANN. §252.048 or its successor statute.

7.1.3 Contractor shall proceed promptly to execute changes in the Work provided in Modifications, unless otherwise stated in the Modification.

7.2 *WORK CHANGE DIRECTIVES*

7.2.1 A Work Change Directive cannot change Contract Price or Contract Time, but is evidence that the Parties agree that a change, ordered by directive, will be incorporated in a subsequently issued Change Order as to its effect, if any, on Contract Price or Contract Time.

7.2.2 Failure by Contractor to commence work identified in a Work Change Directive within the time specified by City Engineer, or to complete the

work in a reasonable period of time, may be determined by City Engineer to be a material breach of Contract.

7.2.3 A Work Change Directive is used in the absence of total agreement of the terms of a Change Order. Interim payments are made in accordance with Paragraph 9.6.1.

7.2.4 If Contractor signs a Work Change Directive, then Contractor agrees to its terms including adjustment in Contract Price and Contract Time or method for determining them. Agreement by the Parties to adjustments in Contract Price and Contract Time are immediately recorded as a Change Order.

7.2.5 City Engineer, by Work Change Directive, may direct Contractor to take measures as necessary to expedite construction to achieve Date of Substantial Completion on or before expiration of Contract Time. When the Work is expedited solely for convenience of the City and not due to Contractor's failure to prosecute timely completion of the Work, then Contractor is entitled to an adjustment in Contract Price equal to actual costs determined in accordance with Article 7.

7.3 *ADJUSTMENTS IN CONTRACT PRICE*

7.3.1 Adjustments in Contract Price are accomplished by Change Order and are based on one of the following methods:

7.3.1.1 mutual acceptance of fixed price, properly itemized and supported by sufficient data to permit evaluation;

7.3.1.2 unit prices stated in the Contract or subsequently agreed upon;

7.3.1.3 cost to be determined in a manner agreed upon by the Parties and mutually acceptable fixed or percentage fee; or

7.3.1.4 as provided in Paragraph 7.3.2.

7.3.2 If Contractor does not agree with a change in Contract Price or Contract Time or the method for adjusting them specified in the Work Change Directive within 21 days from date of the Work Change Directive's issuance, method and adjustment are determined by City Engineer. If Project Manager or Contractor disagree with City Engineer's determination they then may file a Claim in accordance with Section 4.4.

7.3.2.1 If City Engineer determines a method and adjustment in Contract Price under Paragraph 7.3.2, Contractor shall provide, in a form as City Engineer may prescribe, appropriate supporting data for items submitted under Paragraph 7.3.2. Failure to submit the data within 21 days of request for the data by City Engineer shall constitute waiver of a Claim.

7.3.2.2 Unless otherwise provided in the Contract, costs for the purposes of this Paragraph 7.3.2 are limited to the following:

7.3.2.2.1 costs of labor, including labor burden as stated below for social security, unemployment insurance, customary and usual fringe benefits required by agreement or custom, and Workers' Compensation insurance;

7.3.2.2..1.1 the maximum labor burden applied to costs of labor for changes in the Work is 55 percent;

7.3.2.2.2 costs of materials, supplies, and equipment, including cost of transportation, whether incorporated or consumed;

7.3.2.2.3 rental costs of machinery and equipment, exclusive of hand tools, whether rented from Contractor or others, with prior approval of City Engineer;

7.3.2.2.4 costs of premiums for Bonds and insurance and permit fees related to the change in the Work;

7.3.2.2.5 additional costs of direct supervision of work and field office personnel directly attributable to the change; and

7.3.2.2.6 allowances for overhead and profit as stated below.

7.3.2.2.6.1 the maximum allowances for overhead and profit on increases due to Change Orders:

7.3.2.2.6.2 for changes in the Work performed by Contractor and Subcontractors, allowance for overhead and profit are applied to an amount equal to cost of all additions less cost of all deletions to the Work. Allowance for overhead to Contractor and first tier Subcontractors on changes performed by Subcontractors are applied to an amount equal to the sum of all increases to the Work by applicable Subcontractors.

	Overhead	Profit
to Contractor for change in the Work performed by Subcontractors:	10 percent	0 percent
to first tier Subcontractors for change in the Work performed by its Subcontractors:	10 percent	0 percent
to Contractor and Subcontractor for change in the Work performed by their respective firms:	10 percent	5 percent

7.3.3 If the City deletes or makes a change, which results in a net decrease in Contract Price, the City is entitled to a credit calculated in accordance with Paragraphs 7.3.1 and 7.3.2 and Subparagraphs 7.3.2.1, and 7.3.2.2.1 through 7.3.2.2.5. When both additions and credits covering related work or substitutions are involved in a change, allowance for overhead and profit is figured on the basis of a net increase, if any, with respect to that change in accordance with Subparagraph 7.3.2.2.6.

7.3.4 When Contractor agrees with the determination made by City Engineer concerning adjustments in Contract Price and Contract Time, or the Parties otherwise reach agreement upon the adjustments, the agreement will be immediately recorded by Change Order.

7.4 *MINOR CHANGES IN THE WORK*

7.4.1 A Minor Change in Work is binding on the Parties. Contractor shall acknowledge, in a written form acceptable to City Engineer, that there is no change in Contract Time or Contract Price and shall carry out the written orders promptly.

ARTICLE 8 - TIME

8.1 *PROGRESS AND COMPLETION*

8.1.1 Time is of the essence in the Contract. By executing the Contract, Contractor agrees that Contract Time is a reasonable period for performing the Work.

8.1.2 *Computation of Time:* In computing any period of time prescribed or allowed by the General Conditions, the day of the act, event, or default after which designated period of time begins to run is not to be included. Last day of the period so computed is to be included, unless it is a Sunday or Legal Holiday, in which event the period runs until end of next day which is not a Sunday or Legal Holiday. Sundays and Legal Holidays are considered to be days and are to be included in all other time computations relative to Contract Time.

8.1.3 Contractor may not commence the Work prior to the effective date of insurance and Bonds required by Article 11.

8.1.4 Contractor shall proceed expeditiously and without interruption, with adequate forces, and shall achieve Date of Substantial Completion within Contract Time.

8.1.5 Should progress of the Work fall behind construction schedule, except for reasons stated in Paragraph 8.2.1, Contractor shall promptly submit at the request of Project Manager, updated construction schedule to City Engineer for approval. Contractor's failure to submit updated schedule may, at City Engineer's discretion, constitute a material breach of the Contract. Contractor shall take action necessary to restore progress by working the hours, including night shifts and lawful overtime operations as necessary, to achieve Date of Substantial Completion within Contract Time.

8.1.6 Except in connection with safety or protection of persons or the Work or property at the site or adjacent to the site, and except as otherwise indicated in the Contract, all the Work at the site will be performed Monday through Saturday between the hours of 7:00 a.m. and 7:00 p.m. Contractor may not perform work between 7:00 p.m. and 7:00 a.m., on a Sunday, or on a Legal Holiday, without giving City Engineer 24-hour prior written notice and receiving written consent of City Engineer.

8.2 *DELAYS AND EXTENSIONS OF TIME*

8.2.1 Contractor may request extension of Contract Time for a delay in performance of work that arises from causes beyond control and without fault or negligence of Contractor. Examples of these causes are:

8.2.1.1 acts of God or of the public enemy;
8.2.1.2 acts of government in its sovereign capacity;
8.2.1.3 fires;
8.2.1.4 floods;
8.2.1.5 epidemics;
8.2.1.6 quarantine restrictions;
8.2.1.7 strikes;
8.2.1.8 freight embargoes;
8.2.1.9 unusually severe weather; and
8.2.1.10 discovery of Pollutants or Pollutant Facilities at the site.

8.2.2 For any reason other than those listed in Section 4.3.6.2, if the Contractor's work is delayed in any manner or respect, the Contractor shall have no claim for damages and shall have no right of additional compensation from the City by reason of any delay or increased expense to the Contractor's work, except for an extension of time as provided in this provision.

8.2.3 Contractor may request an extension of Contract Time for delay only if:

8.2.3.1 delay is caused by failure of Subcontractor or Supplier to perform or make progress; and

8.2.3.2 cause of failure is beyond control of both Contractor and Subcontractor or Supplier.

8.2.4 Claims relating to Contract Time must be made in accordance with Paragraph 4.3.7.

8.2.5 Claims for extending or shortening Contract Time are based on written notice promptly delivered by the Party making Claim to other Party. Claim must accurately describe occurrence generating Claim, and a statement of probable effect on progress of the Work.

8.2.6 Claims for extension of Contract Time are considered only when a Claim is filed within the time limits stated in Paragraph 4.3.3.

8.2.6.1 Notwithstanding paragraph 4.3.3, an extension of time for delays under this paragraph may be granted only upon written application by the Contractor within 48 hours from the claimed delay.

8.2.7 Written notice of Claim must be accompanied by claimant's written statement that adjustment claimed is entire adjustment to which claimant is entitled as a result of the occurrence of the event. When the Parties cannot agree, Claims for adjustment in Contract Time are determined by City Engineer in accordance with Section 4.4.

8.2.8 Adjustments to Contract Time are accomplished by Change Order.

ARTICLE 9 - PAYMENTS AND COMPLETION

9.1 *UNIT PRICE WORK*

9.1.1 Where the Contract provides that all or part of the Work is based on Unit Prices, the Original Contract Price includes, for all Unit Price work, an amount equal to the sum of Unit Prices times Unit Price Quantities for each separately identified item of Unit Price work.

9.1.2 Each Unit Price includes an amount to cover Contractor's overhead and profit for each separately identified item.

9.1.3 The Contractor may not make a Claim against the City for excess or deficiency in Unit Price Quantities provided in the Contract, except as provided in Subparagraph 9.1.4. Payment at the prices stated in the Contract is in full for the completed work. Contractor is not entitled to additional payment for materials, supplies, labor, tools, machinery and all other expenditures incidental to satisfactory completion of the Work.

9.1.4 City Engineer may increase or decrease quantities of the Work within limitations stated in Paragraph 7.1.2. Contractor is entitled to payment for actual quantities of items provided at Unit Prices set forth in the Contract.

9.1.5 Where the final quantity of work performed by Contractor on Major Unit Price Work item differs by more than 25 percent from quantity of the item stated in the Contract, a Party may request an adjustment in Unit Price, for the portion that differs by more than 25 percent, by a Change Order under Section 7.3.

9.2 *ESTIMATES FOR PAYMENT, UNIT PRICE WORK*

9.2.1 Following the day of each month indicated in the Contract, Project Manager will prepare a Certificate for Payment for the preceding monthly period based on estimated units of work completed. Prior to preparing Certificate of Payment, Contractor shall have submitted to City Engineer, on a form approved by the Director of the Office of Business Opportunity, evidence satisfactory to the City Engineer of payments made to Subcontractors and Suppliers for the month preceding the month for which the Certificate for Payment is prepared, including evidence of electronic submission of certified payrolls.

9.2.2 Before final completion, City Engineer will review and confirm with Contractor the actual final installed Unit Price quantities. City Engineer's determination of actual final installed Unit Price quantities will be included in the final Certificate for Payment and any previous underpayments and overpayments will be reconciled with the actual final Unit Price quantities. Contractor shall file written notice of intent to appeal, if any, City Engineer's

determination within 10 days of receipt of final Certificate for Payment. Upon expiration of the 10-day period, City Engineer's decision is final and binding on the Parties. If Contractor submits notice within the 10-day period, Contractor shall submit a Claim in accordance with Section 4.4.

9.3 *STIPULATED PRICE WORK*

9.3.1 For work contracted on a Stipulated Price basis, 10 days before submittal of first Application for Payment, Contractor shall submit to City Engineer a Schedule of Values allocated to various portions of the Work, prepared in the form and supported by the data as City Engineer may require to substantiate its accuracy. This schedule, as approved by City Engineer, is used as a basis for approval of Contractor's Applications for Payment.

9.4 *APPLICATIONS FOR PAYMENT, STIPULATED PRICE WORK*

9.4.1 For work contracted on a Stipulated Price basis, Contractor shall submit Applications for Payment to City Engineer each month on a form acceptable to City Engineer in accordance with Schedule of Values. Application must indicate percentages of completion of each portion of the Work listed in Schedule of Values as of the end of the period covered by the Application for Payment.

9.4.2 Applications for Payment must be supported by substantiating data as City Engineer may require and must reflect retainages as provided below. Evidence satisfactory to the City Engineer of payments made to Subcontractors and Suppliers for the month preceding the month for which the Application for Payment is submitted must accompany each Application for Payment on a form approved by the Director of the Office of Business Opportunity. Evidence of electronic submission of certified payrolls must be included. Application must be sworn and notarized.

9.5 *CERTIFICATES FOR PAYMENT*

9.5.1 City Engineer will, within 10 days after the date specified in the Contract for Unit Price work, or upon receipt of Contractor's Application for Payment for Stipulated Price work, issue a Certificate for Payment for work based on amount which City Engineer determines is properly due, with copy to Contractor.

9.5.2 Unless otherwise provided in the Contract, payment for completed work and for properly stored Products is conditioned upon compliance with procedures satisfactory to City Engineer to protect the City's interests. Procedures will include applicable insurance, storage, and transportation to site for materials and equipment stored off-site. Contractor is responsible for maintaining materials and equipment until Date of Substantial Completion.

9.5.3 Contractor shall document its use of Ultra Low Sulfur Diesel Fuel by providing invoices and receipts evidencing Contractor's use.

9.6 *COMPUTATIONS OF CERTIFICATES FOR PAYMENT*

9.6.1 Subject to the provisions of the Contract, the amount of each Certificate for Payment is calculated as follows:

- 9.6.1.1 that portion of Contract Price allocated to completed work as determined by:
  - 9.6.1.1.1 multiplying the percentage of completion of each portion of the Work listed in the Schedule of Values by the value of that portion of the Work, or
  - 9.6.1.1.2 multiplying Unit Price quantities Installed times the Unit Prices listed in the Contract;
- 9.6.1.2 plus progress payments for completed work that has been properly authorized by Modifications;
- 9.6.1.3 less retainage of five percent;
- 9.6.1.4 plus actual costs, properly substantiated by certified copies of invoices and freight bills, of non-perishable materials and equipment delivered and properly stored, if approved in advance by Project Manager, less 15 percent;
- 9.6.1.5 less any previous payments by the City.

9.7 *DECISIONS TO WITHHOLD CERTIFICATION*

9.7.1 City Engineer may decline to certify payment and may withhold payment in whole or in part to the extent reasonably necessary to protect the City if, in City Engineer's opinion, there is reason to believe that:

- 9.7.1.1 nonconforming work has not been remedied;
- 9.7.1.2 the Work cannot be completed for unpaid balance of Contract Price;
- 9.7.1.3 there is damage to the City or another contractor;
- 9.7.1.4 the Work will not be completed within Contract Time and that unpaid balance

will not be adequate to cover actual and liquidated damages;

9.7.1.5 probable evidence that third party claims will be filed in court, in arbitration, or otherwise;

9.7.1.6 Contractor has failed to make payments to Subcontractors or Suppliers for labor, material, or equipment; or

9.7.1.7 Contractor has persistently failed to carry out work in accordance with the Contract.

9.7.1.8 Contractor has not paid Subcontractors or Suppliers because of a payment dispute; or

9.7.1.9 Contractor has failed to provide satisfactory evidence described in Paragraphs 9.2.1, 9.4.2, and 9.8.2.

9.7.2 When the above reasons for withholding certification are removed, certification will be made for amounts previously withheld.

9.7.3 City Engineer may decline to certify payment and may withhold request for payment in whole or in part upon failure of Contractor to submit initial construction schedule or monthly schedule updates, as required in Paragraphs 3.15.1 and 3.15.3.

9.8 *PROGRESS PAYMENTS*

9.8.1 The City will make payment, in an amount certified by City Engineer, within 20 days after City Engineer has issued a Certificate for Payment.

9.8.2 The City has no obligation to pay or to facilitate the payment to a Subcontractor or Supplier, except as may otherwise be required by law. Contractor shall comply with the prompt payment requirements of Chapter 2251 of the Government Code. State law requires payment of Subcontractors and Suppliers by Contractor within 7 calendar days of Contractor's receipt of payment from the City, unless there is a payment dispute between Contractor and a Subcontractor or Supplier evidenced on a form approved by the Director of Mayor's Office of Business Opportunity and submitted to the City Engineer each month with Application for Payment or Estimate for Payment. **CONTRACTOR SHALL DEFEND AND INDEMNIFY THE CITY FROM ANY CLAIMS OR LIABILITY ARISING OUT OF CONTRACTOR'S FAILURE TO MAKE THESE PAYMENTS.**

9.8.2.1 The City may, upon request and at the discretion of City Engineer, furnish to Subcontractor information regarding percentages of completion or the amounts applied for by Contractor, and action taken thereon by the City because of work done by the Subcontractor.

9.8.2.2 Contractor shall prepare and submit to City Engineer a Certification of Payment to Subcontractors and Suppliers form to be attached to each monthly Estimate for Payment or Application for Payment.

9.8.3 A Certificate for Payment, a progress payment, or partial or entire use or occupancy of the Work by the City, does not constitute acceptance of work which is not in accordance with the Contract.

9.9 *DATE OF SUBSTANTIAL COMPLETION*

9.9.1 When Contractor considers the Work, or a portion thereof designated by City Engineer, to be substantially complete, Contractor shall prepare and submit to Project Manager a comprehensive punch list of items to be completed or corrected. Failure to include an item on the punch list does not alter the responsibility of Contractor to comply with the Contract.

9.9.1.1 By submitting the punch list to Project Manager, Contractor represents that work on the punch list will be completed within the time provided for in Subparagraph 9.9.4.3.

9.9.2 Upon receipt of Contractor's punch list, Project Manager will inspect the Work, or designated portion thereof, to verify that the punch list contains all items needing completion or correction. If Project Manager's inspection discloses items not on Contractor's punch list, the items must be added to the punch list of items to be completed or corrected. If Project Manager's inspection reveals that Contractor is not yet substantially complete, Contractor shall complete or correct the deficiencies and request another inspection by Project Manager. The City may recover the costs of re-inspection from Contractor.

9.9.3 Prior to City Engineer's issuing a Certificate of Substantial Completion, Contractor shall also provide:

9.9.3.1 Certificate of Occupancy for new construction, or Certificate of Compliance for remodeled work, as applicable, and

9.9.3.2 compliance with Texas Accessibility Standards through state inspection of the Work, if required. If Contractor calls for inspection in a timely manner and the inspection is delayed through no fault of Contractor, and City Engineer so confirms, City Engineer may, upon request by Contractor, add the inspection to the punch list in Paragraph 9.9.2 and issue a Certificate of Substantial Completion.

9.9.4 When the Work, or designated portion thereof, is determined by City Engineer to be sufficiently complete in accordance with the Contract so the City can occupy or utilize the Work, or designated portion thereof, for the purpose for which it is intended, City Engineer will prepare a Certificate of Substantial Completion that incorporates the punch list in Paragraph 9.9.2 and establishes:

9.9.4.1 Date of Substantial Completion;

9.9.4.2 responsibilities of the Parties for security, maintenance, heating, ventilating and air conditioning, utilities, damage to the Work, and insurance; and

9.9.4.3 fixed time within which Contractor shall complete all items on punch list of items to be corrected accompanying the certificate.

9.9.5 Warranties required by the Contract shall commence on the Date of Substantial Completion unless otherwise provided by City Engineer in Certificate of Substantial Completion. Warranties may not commence on items not substantially completed.

9.9.6 After Date of Substantial Completion and upon application by Contractor and approval by City Engineer, the City may make payment, reflecting adjustment in retainage, if any, as follows:

9.9.6.1 with the consent of Surety, the City may increase payment to Contractor to 96 percent of Contract Price, less value of items to be completed and accrued liquidated damages.

9.9.7 Contractor shall complete or correct the items in Paragraph 9.9.2 within the time period set out in the Certificate of Substantial Completion. If Contractor fails to do so, the City may issue a Notice of Noncompliance and proceed according to Section 2.5.

9.10 *PARTIAL OCCUPANCY OR USE*

9.10.1 The City may occupy or use any completed or partially completed portion of the Work at any stage, provided the occupancy or use is consented to by Contractor and Contractor's insurer and authorized by public authorities having jurisdiction over the Work. Consent of Contractor to partial occupancy or use may not be unreasonably withheld.

9.10.2 Immediately prior to the partial occupancy or use, Project Manager and Contractor shall jointly inspect the area to be occupied or portion of the Work to be used to determine and record condition of the Work.

9.10.3 Partial occupancy or use of a portion of the Work does not constitute acceptance of work not in compliance with requirements of the Contract.

9.11 *FINAL COMPLETION AND FINAL PAYMENT*

9.11.1 Contractor shall review the Contract and inspect the Work prior to Contractor notification to City Engineer that the Work is complete and ready for final inspection. Contractor shall submit affidavit that the Work has been inspected and that the Work is complete in accordance with requirements of the Contract.

9.11.2 Project Manager will make final inspection within 15 days after receipt of Contractor's written notice that the Work is ready for final inspection and acceptance. If Project Manager finds the Work has been completed in accordance with the Contract, Contractor shall submit items set out in Paragraph 9.11.4 and, for stipulated price contracts, a final Application for Payment. City Engineer will, within 10 days, issue Certificate of Final Completion stating that to the best of City Engineer's knowledge, information, and belief, the Work has been completed in accordance with the Contract, and will recommend acceptance of the Work by City Council.

9.11.3 Should work be found not in compliance with requirements of the Contract, City Engineer will notify Contractor in writing of items of noncompliance. Upon inspection and acceptance of the corrections by Project Manager, compliance with all procedures of Paragraph 9.11.2, and Contractor's submission of the items set out in Paragraph 9.11.4, the City Engineer will issue Certificate of Final Completion to Contractor as provided in Paragraph 9.11.2.

9.11.4 Contractor shall submit the following items to City Engineer before City Engineer will issue a Certificate of Final Completion:

9.11.4.1 affidavit that payrolls, invoices for materials and equipment, and other indebtedness of Contractor connected

with the Work, less amounts withheld by the City, have been paid or otherwise satisfied. If required by City Engineer, Contractor shall submit further proof including waiver or release of lien or claims from laborers or Suppliers of Products;

9.11.4.2 certificate evidencing that insurance required by the Contract to remain in force after final payment is currently in effect, will not be canceled or materially changed until at least 30 days written notice has been given to the City;

9.11.4.3 written statement that Contractor knows of no substantial reason that insurance will not be renewable to cover correction and warranty period required by the Contract;

9.11.4.4 consent of Surety to final payment; and

9.11.4.5 copies of record documents, maintenance manuals, tests, inspections, and approvals.

Upon City Engineer's issuance of a Certificate of Final Completion, Contractor may request increase in payment to 99 percent of Contract Price, less accrued liquidated damages.

9.11.5 If Contractor fails to submit required items in Paragraph 9.11.4 within 10 days of Project Manager's inspection of the Work under Paragraph 9.11.2 or Paragraph 9.11.3, City Engineer may, but is not obligated to:

9.11.5.1 deduct liquidated damages accrued from monies held;

9.11.5.2 proceed to City Council for acceptance of the Work, minus some or all of the items Contractor fails to submit under Paragraph 9.11.4; and,

9.11.5.3 upon acceptance by City Council of the portion of the Work completed, make final payment as set out in Paragraph 9.11.8.

9.11.6 If final completion is materially delayed through no fault of Contractor, or by issuance of Change Orders affecting date of final completion, and City Engineer so confirms, the City may, upon application by Contractor and certification by City Engineer, and without terminating the Contract, make payment of balance due for that portion of the Work fully completed and accepted.

9.11.7 If remaining balance due for work not corrected is less than retainage stipulated in the Contract, Contractor shall submit to City Engineer written consent of Surety to payment of balance due for that portion of the Work fully completed and accepted, prior to certification of the payment. The payment is made under terms governing final payment, except that it does not constitute waiver of Claims.

9.11.8 The City will make final payment to Contractor within 30 days after acceptance of the Work by City Council, subject to limitations, if any, as stated in the Contract.

9.11.9 Acceptance of final payment by Contractor shall constitute a waiver of all Claims, whether known or unknown, by Contractor, except those previously made in writing and identified by Contractor as unsettled at time of final Application for Payment.

9.12 *LIQUIDATED DAMAGES*

9.12.1 Contractor, Surety, and the City agree that failure to complete the Work within Contract Time will cause damages to the City and that actual damages from harm are difficult to estimate accurately. Therefore, Contractor, Surety, and the City agree that Contractor and Surety are liable for and shall pay to the City the amount stipulated in Supplementary Conditions as liquidated damages, and that the amount of damages fixed therein is a reasonable forecast of just compensation for harm to the City resulting from Contractor's failure to complete the Work within Contract Time. The amount stipulated will be paid for each day of delay beyond Contract Time until Date of Substantial Completion.

9.12.2 Contractor shall pay the City an amount equal to $1,200.00 per diesel operating vehicle or piece of motorized equipment per incident of high sulfur diesel fuel usage.

ARTICLE 10 - SAFETY PRECAUTIONS

10.1 *SAFETY PROGRAMS*

10.1.1 Contractor is responsible for initiating, maintaining, and supervising all safety precautions and programs in connection with performance of the Contract. Contractor shall submit a safety program to City Engineer prior to mobilizing for the Work, and is solely responsible for safety, efficiency, and adequacy of ways, means, and methods, and for damage which might result from failure or improper construction, maintenance, or operation performed by Contractor.

10.2 *POLLUTANTS AND POLLUTANT FACILITIES*

10.2.1 If Contractor encounters material on-site which it reasonably believes to be a Pollutant or facilities which it reasonably believes to be a Pollutant Facility, Contractor shall immediately stop work in affected area and immediately notify City Engineer, confirming the notice thereafter in writing.

10.2.2 If City Engineer determines that the material is a Pollutant or facility is a Pollutant Facility, work in affected area may not be resumed except by Modification, and only if the work would not violate applicable laws or regulations.

10.2.3 If City Engineer determines that the material is not a Pollutant or a facility is not a Pollutant Facility, work in affected area will be resumed upon issuance of a Modification.

10.2.4 Contractor is not required to perform, unless authorized by Change Order, work relating to Pollutants or Pollutant Facilities except for that work relating to Pollutants or Pollutant Facilities specified in the Contract.

10.3 *SAFETY OF THE ENVIRONMENT, PERSONS, AND PROPERTY*

10.3.1 Contractor shall take reasonable precautions for safety and shall provide reasonable protection to prevent damage, injury, or loss from all causes, to:

- 10.3.1.1 employees performing work on-site, and other persons who may be affected thereby;
- 10.3.1.2 work, including Products to be incorporated into the Work, whether in proper storage, under control of Contractor or Subcontractor; and
- 10.3.1.3 other property at or adjacent to the site, such as trees, shrubs, lawns, walks, pavements, roadways, structures, utilities, and Underground Facilities not designated for removal or replacement in course of construction.

10.3.2 Contractor shall give notices and comply with applicable laws, ordinances, rules, regulations, and lawful orders of public authorities bearing on safety of persons, property, or environment.

10.3.2.1 Contractor shall comply with requirements of Underground Facility Damage Prevention and Safety Act TEX. UTIL. CODE ANN. Ch. 251 (Vernon Supp. 2002).

10.3.2.2 Contractor shall comply with all safety rules and regulations of the Federal Occupational Health and Safety Act of 1970 and subsequent amendments (OSHA).

10.3.3 Contractor shall erect and maintain, as required by existing conditions and performance of the Contract, reasonable safeguards for safety and protection of persons and property, including posting danger signs and other warnings against hazards, promulgating safety regulations, and notifying owners and users of adjacent sites and utilities.

10.3.4 Contractor shall designate responsible member of Contractor's organization at site whose duty is prevention of accidents. This person will be Contractor's Superintendent unless otherwise designated by Contractor in writing to City Engineer.

10.3.5 Contractor shall prevent windblown dust and may not burn or bury trash debris or waste products on-site. Contractor shall prevent environmental pollution, including but not limited to particulates, gases and noise, as a result of the Work.

10.3.6 When use or storage of hazardous materials or equipment, or unusual methods are necessary for execution of the Work, Contractor shall exercise utmost care and carry on the activities under supervision of properly qualified personnel.

10.3.7 Contractor shall promptly remedy damage and loss to property referred to in Subparagraphs 10.3.1.2 and 10.3.1.3, caused in whole or in part by Contractor, or Subcontractors, which is not covered by insurance required by the Contract. Contractor is not required to remedy damage or loss attributable to the City, Design Consultant, or other contractors.

10.4 *EMERGENCIES*

10.4.1 In emergencies affecting safety of persons or property, Contractor shall act at Contractor's discretion to prevent imminent damage, injury, or loss. Additional compensation or extension of time claimed by Contractor because of emergencies are determined as provided in Article 7.

ARTICLE 11 - INSURANCE AND BONDS

11.1 *GENERAL INSURANCE REQUIREMENTS*

11.1.1 With no intent to limit Contractor's liability under indemnification provisions set forth in Paragraphs 3.25 and 3.26, Contractor shall provide and maintain in full force and effect during term of the Contract and all extensions and amendments thereto, at least the following insurance and available limits of liability.

11.1.2 If any of the following insurance is written as "claims made" coverage and the City is required to be carried as additional insured, then Contractor's insurance shall include a two-year extended discovery period after last date that Contractor provides any work under the Contract.

11.1.3 Aggregate amounts of coverage, for purposes of the Contract, are agreed to be amounts of coverage available during fixed 12-month policy period.

11.2 *INSURANCE TO BE PROVIDED BY CONTRACTOR*

11.2.1 *Risks and Limits of Liability:* Contractor shall provide at a minimum insurance coverage and limits of liability set out in Table 1.

11.2.1.1 If Limit of Liability for Excess Coverage is $2,000,000 or more, Limit of Liability for Employer's Liability may be reduced to $500,000.

11.2.2 *Form of Policies:* Insurance may be in one or more policies of insurance, form of which is subject to approval by City Engineer. It is agreed, however, that nothing City Engineer does or fails to do with regard to insurance policies relieves Contractor from its duties to provide required coverage and City Engineer's actions or inactions will never be construed as waiving the City's rights.

11.2.3 *Issuers of Policies:* Issuer of any policy shall have:

.1 a Certificate of Authority to transact business in Texas, or

.2 have a Best's rating of at least B+ and a Best's Financial Size Category of Class VI or better, according to the most current edition of Best's Key Rating Guide, and the issuer must be an eligible nonadmitted insurer in the State of Texas.

Each insurer is subject to approval by City Engineer in City Engineer's sole discretion as to conformance with these requirements, pursuant to Paragraph 11.2.2.

11.2.4 *Insured Parties:* The City shall be an Additional Insured under this Contract. Each policy, except those for Workers' Compensation and Owner's and Contractor's Protective Liability, must name the City, its officers, agents, and employees as Aadditional Iinsured parties on original policy and all renewals or replacements during term of the Contract. The City's status as additional insured under Contractor's insurance does not extend to instances of sole negligence of the City unmixed with any fault of Contractor.

11.2.5 *Deductibles:* Contractor assumes and bears any claims or losses to extent of deductible amounts and waives any claim it may ever have for same against the City, its officers, agents, or employees.

11.2.6 *Cancellation:* Contractor shall notify the Director in writing 30 days prior to any cancellation or material change to Contractor's insurance coverage. Within the 30 day period, Contractor shall provide other suitable policies in lieu of those about to be canceled or nonrenewed so as to maintain in effect the required coverage. If Contractor does not comply with this requirement, the City Engineer, at his or her sole discretion, may:

.1 immediately suspend Contractor from any further performance under this Contract and begin procedures to terminate for default, or

.2 purchase the required insurance with City funds and deduct the cost of the premiums from amounts due to Contractor under this Contract.

11.2.7 *Subrogation:* Contractor waives any claim or right of subrogation to recover against the City, its officers, agents, or employees. Each policy, except professional liability, must contain an endorsement waiving such claim.

11.2.8 *Endorsement of Primary Insurance:* Each policy, except Workers' Compensation policies, must contain an endorsement that the policy is primary insurance to any other insurance available to additional insured with respect to claims arising hereunder.

11.2.9 *Liability for Premium:* Contractor is solely responsible for payment of all insurance premium requirements hereunder and the City is not obligated to pay any premiums.

11.2.10 *Additional Requirements for Workers' Compensation Insurance Coverage:* Contractor shall, in addition to meeting the obligations set forth in Table 1, maintain throughout the term of the Contract Workers' Compensation coverage as required by statute, and Contractor shall specifically comply with requirements set forth in Paragraph

11.2.10. The definitions set out below shall apply only for purposes of this Paragraph 11.2.10.

11.2.10.1 Definitions:

11.2.10.1.1 *Certificate of Coverage:* A copy of certificate of insurance, or coverage agreement (TWCC-81, TWCC-82, TWCC-83, or TWCC-84), showing statutory Workers' Compensation insurance coverage for Contractor's, Subcontractor's, or Supplier's employees providing services for the duration of the Contract.

11.2.10.1.2 *Duration of the Work:* Includes the time from Date of Commencement of the Work until Contractor's work under the Contract has been completed and accepted by City Council.

11.2.10.1.3 *Persons providing services for the Work (Subcontractor in Texas Labor Code § 406.096):* includes all persons or entities performing all or part of services Contractor has undertaken to perform on the Work, regardless of whether that person contracted directly with Contractor and regardless of whether that person has employees. This includes, without limitation, independent contractors, subcontractors, leasing companies, motor carriers, owner-operators, employees of the entity, or employees of entity which furnishes persons to provide services on the Work. Services include, without limitation, providing, hauling, or delivering equipment or materials, or providing labor, transportation, or other service related to the Work. Services do not include activities unrelated to the Work, such as food/beverage vendors, office supply deliveries, and delivery of portable toilets.

11.2.10.2 Contractor shall provide coverage, based on proper reporting of classification codes and payroll amounts and filing of coverage agreements, which meets the statutory requirements of TEX. LAB. CODE ANN., Section 401.011(44) for employees of Contractor providing services on the Work, for duration of the Work.

11.2.10.3 Contractor shall provide a Certificate of Coverage to the City prior to being awarded the Contract.

11.2.10.4 If coverage period shown on Contractor's original Certificate of Coverage ends during duration of the Work, Contractor shall file new Certificate of Coverage with the City showing that coverage has been extended.

11.2.10.5 Contractor shall obtain from each person providing services on the Work, and provide to City Engineer:

11.2.10.5.1 Certificate of Coverage, prior to that person beginning work on the Work, so the City will have on file Certificates of Coverage showing coverage for all persons providing services on the Work; and

11.2.10.5.2 no later than seven days after receipt by Contractor, new Certificate of Coverage showing extension of coverage, if coverage period shown on current Certificate of Coverage ends during the duration of the Work.

11.2.10.6 Contractor shall retain all required Certificates of Coverage for the duration of the Work and for one year thereafter.

11.2.10.7 Contractor shall notify City Engineer in writing by certified mail or personal delivery, within 10 days after Contractor knew or should have known, of any change that materially affects provision of coverage of any person providing services on the Work.

11.2.10.8 Contractor shall post on-site a notice, in text, form and manner prescribed by Texas Workers' Compensation Commission, informing all persons providing services on the Work that they are required to be covered, and stating how person may verify coverage and report lack of coverage.

11.2.10.9 Contractor shall contractually require each person with whom it contracts to provide services on the Work to:

11.2.10.9.1 provide coverage, based on proper reporting of classification codes, payroll amounts and filing of any coverage agreements, which meets statutory requirements of TEX. LAB. CODE ANN., Section 401.011(44) for all its employees providing services on the Work, for the duration of the Work;

11.2.10.9.2 provide to Contractor, prior to that person's beginning work on the Work, a Certificate of Coverage showing that coverage is being provided for all employees of the

person providing services on the Work, for the duration of the Work;

11.2.10.9.3 provide Contractor, prior to the end of the coverage period, a new Certificate of Coverage showing extension of coverage, if the coverage period shown on the current Certificate of Coverage ends during the duration of the Work;

11.2.10.9.4 obtain from each other person with whom it contracts, and provide to Contractor: (1) Certificate of Coverage, prior to other person's beginning work on the Work; and (2) new Certificate of Coverage showing extension of coverage, prior to end of coverage period, if coverage period shown on the current Certificate of Coverage ends during duration of the Work.

11.2.10.9.5 retain all required Certificates of Coverage on file for the duration of the Work and for one year thereafter;

11.2.10.9.6 notify City Engineer in writing by certified mail or personal delivery within 10 days after person knew, or should have known, of change that materially affects provision of coverage of any person providing services on the Work; and

11.2.10.9.7 contractually require each person with whom it contracts to perform as required by Paragraphs 11.2.10.1 through 11.2.10.7, with Certificates of Coverage to be provided to person for whom they are providing services.

11.2.10.10 By signing the Contract or providing or causing to be provided a Certificate of Coverage, Contractor is representing to the City that all employees of Contractor who will provide services on the Work will be covered by Workers' Compensation coverage for the duration of the Work, that coverage will be based on proper reporting of classification codes and payroll amounts, and that all coverage agreements will be filed with appropriate insurance carrier. Contractor is not allowed to self-insure Workers' Compensation. Contractor may be subject to administrative penalties, criminal penalties, civil penalties, or other civil actions for providing false or misleading information.

11.2.10.11 Contractor's failure to comply with Paragraph 11.2.10 is a breach of the Contract by Contractor, which entitles the City to declare the Contract void if Contractor does not remedy breach within 10 days after receipt of notice of breach from City Engineer.

11.2.11 *Subcontractor Insurance Requirements:* Contractor shall require Subcontractors and Suppliers to obtain Commercial General Liability, Workers' Compensation, Employer's Liability and Automobile Liability coverage that meets all the requirements of Paragraph 11.2. The amount must be commensurate with the amount of the subcontract, but not less than $500,000 per occurrence. Contractor shall require all Subcontractors with whom it contracts directly, whose subcontracts exceed $100,000, to provide proof of Commercial General Liability and Automobile Liability insurance coverage meeting the above requirements. Contractor shall comply with all requirements set out under Paragraph 11.2.10 as to Workers' Compensation Insurance for all Subcontractors and Suppliers.

REQUIRED COVERAGE

(Coverage)	(Limit of Liability)
.1 Workers' Compensation	• Statutory Limits for Workers' Compensation
.2 Employer's Liability	• Bodily Injury by Accident $1,000,000 (each accident) • Bodily Injury by Disease $1,000,000 (policy limit) • Bodily Injury by Disease $1,000,000 (each employee)
.3 Commercial General Liability: Including Contractor's Protective, Broad Form Property Damage, Contractual Liability, Explosion, Underground and Collapse, Bodily Injury, Personal Injury, Products, and Completed Operations (for a period of one year following completion of the Work).	• Combined single limit of $1,000,000 (each occurrence), subject to general aggregate of $1,000,000; • Products and Completed Operations $1,000,000 aggregate.
.4 Owner's and Contractor's Protective Liability	• $1,000,000 combined single limit each Occurrence/ aggregate
.5 Installation Floater (Unless alternative coverage approved by City Attorney)	• Value of stored material or equipment, listed on Certificates of Payments, but not yet incorporated into the Work
.6 Automobile Liability Insurance: (For automobiles furnished by Contractor in course of his performance under the Contract, including Owned, Non-owned, and Hired Auto coverage)	• $1,000,000 combined single limit each occurrence for (1) Any Auto or (2) All Owned, Hired, and Non-Owned Autos
.7 Excess Coverage	• $1,000,000 each occurrence/combined aggregate in excess of limits specified for Employer's Liability, Commercial General Liability, and Automobile Liability
Aggregate Limits are per 12-month policy period unless otherwise indicated.	

11.3 *PROOF OF INSURANCE*

11.3.1 Prior to commencing services and at time during the term of the Contract, Contractor shall furnish City Engineer with Certificates of Insurance, along with Affidavit from Contractor confirming that Certificate accurately reflects insurance coverage that is available during term of the Contract. If requested in writing by City Engineer, Contractor shall furnish City Engineer with certified copies of Contractor's actual insurance policies. Failure of Contractor to provide certified copies, as requested, may be deemed, at City Engineer's or City Attorney's discretion, a material breach of the Contract.

11.3.2 Notwithstanding the proof of insurance requirements, Contractor shall continuously maintain in effect required insurance coverage set forth in Paragraph 11.2. Failure of Contractor to comply with this requirement does constitute a material breach by Contractor allowing the City, at its option, to immediately suspend or terminate work, or exercise any other remedy allowed under the Contract. Contractor agrees that the City has not waived or is not estopped to assert a material breach of the Contract because of any acts or omissions by the City regarding its review or non-review of insurance documents provided by Contractor, its agents, employees, or assigns.

11.3.3 Contractor shall provide updated certificates of insurance to the Director upon request. The Contractor shall be responsible for delivering a current certificate of insurance in the proper form to the Director as long as Contractor is required to furnish insurance coverage under Paragraph 11.2.

11.3.4 Every certificate of insurance Contractor delivers in connection with this Contract shall

11.3.4.1 be less than 12 months old;

11.3.4.2 include all pertinent identification information for the Insurer, including the company name and address, policy

number, NAIC number or AMB number, and authorized signature;

11.3.4.3 include in the Certificate Holder Box the Project name and reference numbers, contractor's email address, and indicates the name and address of the Project Manager;

11.3.4.4 include the Contractor's email address in the Certificate Holder Box;

11.3.4.5 include the Project reference numbers on the City address so the Project reference number is visible in the envelope window; and

11.3.4.6 be appropriately marked to accurately identify all coverages and limits of the policy, effective and expiration dates, and waivers of subrogation in favor of the City for Commercial General Liability, Automobile Liability, and Worker's Compensation/Employers' Liability.

11.4 *PERFORMANCE AND PAYMENT BONDS*

11.4.1 For Contracts over the value of $25,000, Contractor shall provide Bonds on the City's standard forms covering faithful performance of the Contract and payment of obligations arising thereunder as required in the Contract pursuant to Chapter 2253 of the Government Code. The Bonds must be for 100 percent of Original Contract Price and in accordance with conditions stated on standard City Performance and Payment Bond and Statutory Payment Bond forms. Bonds may be obtained from Contractor's usual source and cost for the Bonds are included in Contract Price.

11.5 *MAINTENANCE BONDS*

11.5.1 *One-year Maintenance Bond:* Contractor shall provide Bond on standard City One-year Maintenance Bond form, providing for Contractor's correction, replacement, or restoration of any portion of the Work which is found to be not in compliance with requirements of the Contract during one-year correction period required in Paragraph 12.2. The Maintenance Bond must be for 100 percent of the Original Contract Price.

11.6 *SURETY*

11.6.1 A Bond that is given or tendered to the City pursuant to the Contract must be executed by a surety company that is authorized and admitted to write surety Bonds in the State of Texas.

11.6.2 If a Bond is given or tendered to the City pursuant to the Contract in an amount greater than 10 percent of Surety's capital and surplus, Surety shall provide certification that Surety has reinsured that portion of the risk that exceeds 10 percent of Surety's capital and surplus. The reinsurance must be with one or more reinsurers who are duly authorized, accredited, or trusted to do business in the State of Texas. The amount reinsured by reinsurer may not exceed 10 percent of reinsurer's capital and surplus. The amount of allowed capital and surplus must be based on information received from State Board of Insurance.

11.6.3 If the amount of a Bond is greater than $100,000, Surety shall:

11.6.3.1 also hold certificate of authority from the United States Secretary of Treasury to qualify as surety on obligations permitted or required under federal law; or,

11.6.3.2 Surety may obtain reinsurance for any liability in excess of $100,000 from reinsurer that is authorized and admitted as a reinsurer in the State of Texas and is the holder of a certificate of authority from the United States Secretary of the Treasury to qualify as surety or reinsurer on obligations permitted or required under federal law.

11.6.4 Determination of whether Surety on the Bond or the reinsurer holds a certificate of authority from the United States Secretary of the Treasury is based on information published in Federal Register covering the date on which Bond was executed.

11.6.5 Each Bond given or tendered to the City pursuant to the Contract must be on City forms with no changes made by Contractor or Surety, and must be dated, executed, and accompanied by power of attorney stating that the attorney in fact executing such the bond has requisite authority to execute such Bond. The Bonds must be dated and must be no more than 30 days old.

11.6.6 Surety shall designate in its Bond, power of attorney, or written notice to the City, an agent resident in Harris County to whom any requisite notices may be delivered and on whom service of process may be had in matters arising out of the suretyship.

11.6.7 Contractor shall furnish information to a payment bond beneficiary as required by TEX. GOV'T CODE ANN. CH. 2253.

11.7 *DELIVERY OF BONDS*

11.7.1 Contractor shall deliver required Bonds to the City within time limits stated in Notice of Intent to Award and prior to Date of Commencement of the Work.

ARTICLE 12 - UNCOVERING AND CORRECTION OF THE WORK

12.1 *UNCOVERING OF THE WORK*

12.1.1 If a portion of the Work has been covered which City Engineer has not specifically requested to observe prior to its being covered, City Engineer may request to see such work and it must be uncovered by Contractor. If such work is in accordance with the Contract, the costs of uncovering and covering such work are charged to the City by Change Order. If such work is not in accordance with the Contract, Contractor shall pay for uncovering and shall correct the nonconforming Work promptly after receipt of Notice of Noncompliance to do so.

12.2 *CORRECTION OF THE WORK*

12.2.1 Contractor shall promptly correct or remove work rejected by City Engineer or work failing to conform to requirements of the Contract, whether observed before or after Date of Substantial Completion and whether fabricated, Installed, or completed.

12.2.2 Contractor bears costs of correcting the rejected or nonconforming work including additional testing and inspections, and compensation for Design Consultant's services and expenses made necessary thereby.

12.2.3 If within one year after Date of Substantial Completion, or after date for commencement of warranties established under Paragraph 9.9.5 or by other applicable special warranty required by the Contract, whichever is later in time, any of the Work is found not to be in accordance with the requirements of the Contract, Contractor shall correct such work promptly after receipt of Notice of Noncompliance to do so.

12.2.4 One-year correction period for portions of the Work completed after Date of Substantial Completion will begin on the date of acceptance of that portion of the Work. This obligation under this Paragraph survives acceptance of the Work under the Contract and termination of the Contract.

12.2.5 The one-year correction period does not establish a duration for the Contractor's general warranty under Paragraph 3.12. The City retains the right to recover damages from the Contractor as long as may be permitted by the applicable statute of limitations.

12.2.6 If Contractor does not proceed with correction of the nonconforming work within time fixed by Notice of Noncompliance, the City may correct nonconforming work or remove nonconforming work and store salvageable Products at Contractor's expense. Contractor shall pay the costs of correction of nonconforming work and removal and storage of salvageable Products to the City. If Contractor does not pay costs of the correction or removal and storage within 10 days after written notice, the City may sell the Products at auction or at private sale. The City will account for proceeds thereof after deducting costs and damages that would have been borne by Contractor, including compensation for services of Design Consultant and necessary expenses. If the proceeds of sale do not cover costs which Contractor should have borne, Contractor shall pay the value of the deficiency to the City.

12.2.7 Contractor bears cost of correcting work originally installed by Contractor, the City, or by separate contractors and damaged by Contractor's correction or removal of Contractor's work.

12.3 *ACCEPTANCE OF NONCONFORMING WORK*

12.3.1 If City Engineer prefers to accept work which is not in accordance with requirements of the Contract, City Engineer may do so only by issuance of Change Order, instead of requiring its removal and correction. City Engineer will determine Contract Price reduction. The reduction will become effective even if final payment has been made.

ARTICLE 13 - MISCELLANEOUS PROVISIONS

13.1 *GOVERNING LAWS*

13.1.1 The Contract is subject to the laws of the State of Texas, the City Charter and Ordinances, the laws of the federal government of the United States, and all rules and regulations of any regulatory body or officer having jurisdiction.

13.1.2 Venue for any litigation relating to the Contract is Harris County, Texas.

13.2 *SUCCESSORS*

13.2.1 The Contract binds and benefits the Parties and their legal successors and permitted assigns; however, this Paragraph 13.2.1 does not alter the restrictions on assignment and disposal of assets set out in Paragraph 13.3.1. The Contract does not create any personal liability on the part of any officer or agent of the City.

13.3 *BUSINESS STRUCTURE AND ASSIGNMENTS*

13.3.1 Contractor may not assign the Contract at law or otherwise, or dispose of all or substantially all of its assets without City Engineer's prior written consent. Nothing in this Section, however, prevents the assignment of accounts receivable or the creation of a security interest as described in §9.406 of the Texas Business & Commerce Code. In the case of such an assignment, Contractor shall immediately furnish the City with proof of the assignment and the name, telephone number, and address of the assignee and a clear identification of the fees to be paid to the assignee.

13.3.2 Any series, as defined by the TEX. BUS. ORG. CODE ANN., affiliate, subsidiary, or successor to which Contractor assigns or transfers assets shall join in privity and be jointly and severally liable under this Contract.

13.4 *WRITTEN NOTICE*

13.4.1 All notices required or permitted by the Contract must be in writing and must be effected by hand delivery; registered or certified mail, return receipt requested; or facsimile with confirmation copy mailed to receiving Party. Notice is sufficient if made or addressed with proper postage to the address stated in the Agreement for each Party ("Notice Address") or faxed to the facsimile number stated in the Agreement for each Party. The notice is deemed delivered on the earlier of:

13.4.1.1 the date the Notice is actually received;

13.4.1.2 the third day following deposit in a United States Postal Service post office or receptacle; or

13.4.1.3 the date the facsimile is sent unless the facsimile is sent after 5:00 p.m. local time of the recipient and then it is deemed received on the following day.

Any Party may change its Notice Address or facsimile number at any time by giving written notice of the change to the other Party in the manner provided for in this Paragraph at least 15 days prior to the date the change is affected.

13.5 *RIGHTS AND REMEDIES*

13.5.1 Duties and obligations imposed by the Contract and rights and remedies available thereunder are in addition to and not a limitation of duties, obligations, rights, and remedies otherwise imposed or available by law.

13.5.2 No act or failure to act by the City or Contractor is a waiver of rights or duties afforded them under the Contract, nor is the act or failure to act constitute approval of or acquiescence in a breach of the Contract. No waiver, approval or acquiescence is binding unless in writing and, in the case of the City, signed by City Engineer.

13.6 *TESTS AND INSPECTIONS*

13.6.1 Contractor shall give City Engineer, Construction Manager, and Design Consultant timely notice of the time and place where tests and inspections are to be made. Contractor shall cooperate with inspection and testing personnel to facilitate required inspections or tests.

13.6.2 The City will employ and pay for services of an independent testing laboratory to perform inspections or acceptance tests required by the Contract except:

13.6.2.1 inspections or tests covered by Paragraph 13.6.3;

13.6.2.2 those otherwise specifically provided in the Contract; or

13.6.2.3 costs incurred in connection with tests or inspections conducted pursuant to Paragraph 12.2.2.

13.6.3 Contractor is responsible for and shall pay all costs in connection with inspection or testing required in connection with City Engineer's acceptance of a Product to be incorporated into the Work, or of materials, mix designs, or equipment submitted for approval prior to Contractor's purchase thereof for incorporation into the Work.

13.6.4 Neither observations by the City, Construction Manager, or Design Consultant, nor inspections, tests, or approvals by others, relieves Contractor from Contractor's obligations to perform the Work in accordance with the Contract.

13.7 *INTEREST*

13.7.1 No interest will accrue on late payments by the City except as provided under Chapter 2251 of the Government Code.

13.8 *PARTIES IN INTEREST*

13.8.1 The Contract does not bestow any rights upon any third party, but binds and benefits the Parties only.

13.9 *ENTIRE CONTRACT*

13.9.1 The Contract merges the prior negotiations and understandings of the Parties and embodies the entire agreement of the Parties. No other agreements, assurances, conditions, covenants, express or implied, or other terms of any kind, exist between the Parties regarding the Contract.

13.10 *WRITTEN AMENDMENT*

13.10.1 Changes to the Contract that cannot be effected by Modifications, must be made by written amendment, which will not be effective until approved by City Council.

13.11 *COMPLIANCE WITH LAWS*

13.11.1 Contractor shall comply with the Americans with Disabilities Act of 1990 as amended (ADA) and Texas Architectural Barriers Act and all regulations relating to either statute.

13.11.2 Contractor shall comply with all applicable federal, state, and city laws, rules and regulations.

13.12 *SEVERABILITY*

13.12.1 If any part of the Contract is for any reason found to be unenforceable, all other parts remain enforceable to the extent permitted by law.

ARTICLE 14 - TERMINATION OR SUSPENSION OF THE CONTRACT

14.1 *TERMINATION BY THE CITY FOR CAUSE*

14.1.1 Each of the following acts or omissions of Contractor or occurrences shall constitute an "Event of Default" under the Contract:

14.1.1.1 Contractor refuses or fails to supply enough properly skilled workers or proper Products;

14.1.1.2 Contractor disregards laws, ordinances, rules, regulations, or orders of a public authority having jurisdiction;

14.1.1.3 Contractor is guilty of material breach of any duty or obligation of Contractor under the Contract, including, but not limited to, failure to submit certified payrolls electronically;

14.1.1.4 Contractor has had any other contract with the City terminated for cause at any time subsequent to the effective date of the Contract as set out in the Agreement; or

14.1.1.5 Contractor fails to utilize Ultra Low Sulfur Diesel Fuel, as required in Paragraph 3.9.1.1.

14.1.2 If an Event of Default occurs, City Engineer may, at his option and without prejudice to any other rights or remedies which the City may have, deliver a written notice to Contractor and Surety describing the Event of Default and giving the Contractor 10 days to cure the Event of Default. If after the cure period, Contractor has failed or refused to cure the Event of Default, then City Engineer may deliver a second written notice to Contractor giving notice of the termination of the Contract or of the termination of Contractor's performance under the Contract ("Notice of Termination"). If City Engineer issues a Notice of Termination, then City Engineer may, subject to any prior rights of Surety and any other rights of the City under the Contract or at law:

14.1.2.1 request that Surety complete the Work; or

14.1.2.2 take possession of the site and all materials, equipment, tools, and construction equipment and machinery on the site owned by Contractor; and

14.1.2.3 finish the Work by whatever reasonable method City Engineer may deem expedient.

14.1.3 After Contractor's receipt of a Notice of Termination, and except as otherwise directed in writing by City Engineer, Contractor shall:

14.1.3.1 stop the Work on the date and to the extent specified in the Notice of Termination;

14.1.3.2 place no further orders or subcontracts for Products or services;

14.1.3.3 terminate all orders and subcontracts to the extent that they relate to performance of work terminated;

14.1.3.4 assign to the City, in the manner, at the times, and to the extent directed by City Engineer, all rights, title, and interest of Contractor, under the terminated supply orders and subcontracts. The City may settle or pay claims arising out of termination of the orders and subcontracts;

14.1.3.5 settle all outstanding liabilities and all claims arising out of the termination of

supply orders and subcontracts with approval of City Engineer;

14.1.3.6 take action as may be necessary, or as City Engineer may direct, for protection and preservation of property related to the Work that is in possession of Contractor, and in which the City has or may acquire an interest; and

14.1.3.7 secure the Work in a safe state before leaving the site, providing any necessary safety measures, shoring, or other devices.

14.1.4 If the City terminates the Contract or terminates Contractor's performance under the Contract for any one or more of the reasons stated in Paragraph 14.1.1, Contractor may not receive any further payment until the Work is complete, subject to Paragraph 14.1.5.

14.1.5 If the unpaid balance of Contract Price exceeds the costs of finishing the Work, including liquidated damages and other amounts due under the Contract, the balance will be paid to Contractor. If the costs of finishing the Work exceed the unpaid balance, Contractor shall, within 10 days of receipt of written notice setting out the amount of the excess costs, pay the difference to the City. The amount to be paid to Contractor or the City will be certified by City Engineer in writing, and this obligation for payment shall survive termination of the Contract or termination of Contractor's performance under the Contract. Termination of the Contractor for cause shall not relieve the Surety from its obligation to complete the project.

14.2 *TERMINATION BY THE CITY FOR CONVENIENCE*

14.2.1 City Engineer may, without cause and without prejudice to other rights or remedies of the City, give Contractor and Surety a Notice of Termination with a seven days written notice.

14.2.2 After receipt of the Notice of Termination, and except as otherwise approved by City Engineer, Contractor shall conform to requirements of Paragraph 14.1.3.

14.2.3 After receipt of the Notice of Termination, Contractor shall submit to the City its termination Claim, in forms required by City Engineer. The Claim will be submitted to the City promptly, but no later than six months from the effective date of termination, unless one or more extensions are granted by City Engineer in writing. If Contractor fails to submit its termination Claim within the time allowed, in accordance with Paragraph 14.2.4, City Engineer will determine, on the basis of available information, the amount, if any, due to Contractor because of termination, and City Engineer's determination is final and binding on the Parties. The City will then pay to Contractor the amount so determined.

14.2.4 City Engineer will determine, on the basis of information available to City Engineer, the amount due, if any, to Contractor for the termination as follows:

14.2.4.1 Contract Price for all work performed in accordance with the Contract up to the date of termination determined in the manner prescribed for monthly payments in Article 9, except no retainage is withheld by the City either for payment determined by percentage of completion or for materials and equipment delivered to the site, in storage or in transit.

14.2.4.2 Reasonable termination expenses, including costs for settling and paying Subcontractor and Supplier claims arising out of termination of the Work, reasonable cost of preservation and protection of the City's property after termination, if required, and the cost of Claim preparation. Termination expenses do not include field or central office overhead, salaries of employees of Contractor, or litigation costs, including attorneys' fees.

No amount is allowed for anticipated profit or central office overhead on uncompleted work, or any cost or lost profit for other business of Contractor alleged to be damaged by the termination.

14.2.5 Contractor shall promptly remove from the site any construction equipment, tools, and temporary facilities, except the temporary facilities which City Engineer may wish to purchase and retain.

14.2.6 Contractor shall cooperate with City Engineer during the transition period.

14.2.7 The City will take possession of the Work and materials delivered to the site, in storage, or in transit, as of date or dates specified in the Notice of Termination, and is responsible for maintenance, utilities, security, and insurance, as stated in Notice of Termination.

14.3 *SUSPENSION BY THE CITY FOR CONVENIENCE*

14.3.1 City Engineer may, without cause, after giving Contractor and Surety 24-hour prior written notice, order Contractor to suspend, delay, or interrupt the Work in whole or in part for a period of time as City Engineer may determine.

14.3.2 An adjustment will be made in Contract Time equivalent to the time of suspension.

14.3.3 Adjustment will be made to Contract Price for increases in the cost of performance of the Work, including profit on increased cost of performance caused by suspension, delay, or interruption of the Work in accordance with Paragraph 7.3. No adjustment will be made to the extent that:

14.3.3.1 performance was, or would have been, suspended, delayed, or interrupted by another cause for which Contractor is responsible; or

14.3.3.2 adjustment is made or denied under another provision of the Contract.

14.4 *TERMINATION BY CONTRACTOR*

14.4.1 Contractor may terminate the Contract if the Work is stopped for a period of 30 days through no act or fault of Contractor, directly related to one of these events:

14.4.1.1 issuance of an order of a court or other public authority having jurisdiction;

14.4.1.2 act of government, such as a declaration of national emergency which makes material unavailable; or

14.4.1.3 if repeated suspensions, delays, or interruptions by the City as described in Paragraph 14.3 constitute, in the aggregate, more than 100 percent of the total number of days scheduled for completion, or 120 days in any 365-day period, whichever is less;

No termination will be effective for the above reasons if Contractor delivers written notice to City Engineer describing the reason for termination, giving the proposed termination date, and granting the City a reasonable opportunity to respond and cure any City default before termination is effective.

14.4.2 If the Contract is terminated pursuant to this Paragraph 14.4, Contractor shall comply with the requirements of Paragraphs 14.2.2 through 14.2.7.

END OF DOCUMENT

Document 00800

SUPPLEMENTARY CONDITIONS

The following Paragraphs amend and supplement the August 1, 2015 edition of General Conditions. Unaltered portions of General Conditions remain in effect.

ARTICLE 1 - GENERAL PROVISIONS:

1.1 *DEFINITIONS*: *Insert the following Paragraph 1.1.22.1, and reorder the remaining definitions accordingly.*

1.1.22.1 *Good Faith Efforts*. Steps taken to achieve an MBE, WBE, SBE, or PDBE goal or other requirements which, by their scope, intensity, and usefulness, demonstrate the bidder's responsiveness to fulfill the business opportunity objective, as well as the Contractor's responsibility to put forth measures to meet or exceed the MBE, WBE, SBE, or PDBE goal (Contract Goal). These steps apply from before a contract's award, through its duration, and after its conclusion, in the event the Contractor has been unsuccessful in meeting the Contract Goal. These efforts are required whether a Goal Oriented Contract or a Regulated Contract, as defined in the Office of Business Opportunity's Policy & Procedures Manual, available at http://www.houstontx.gov/obo.

ARTICLE 3 - THE CONTRACTOR

3.5 *LABOR*: *Insert the following Paragraphs, 3.5.3.1.1, 3.5.3.1.2 and3.5.3.1.3.*

3.5.3.1.1 If the Original Contract Price is greater than One Million Dollars, Contractor shall make Good Faith Efforts to comply with the City ordinances regarding Minority Business Enterprises (MBE), Women Business Enterprises (WBE), Persons with Disabilities Business Enterprises (PDBE) and Small Business Enterprise (SBE) participation goals which are as follows:

.1 the MBE goal is 11% percent,

.2 the WBE goal is 7% percent, and

.3 the PDBE goal is 0 percent.

.4 The bidder may substitute SBE participation of no more than four percent of the MBE goal, the WBE goal, or portions of the MBE Goal and WBE Goal.

3.5.3.1.2 The MBE, WBE, PDBE, and SBE goals are specific to this Agreement. The Contractor shall make reasonable efforts to achieve these goals.

3.5.3.1.3 Failure by Contractor to comply with the goals for MBE, WBE, SBE, or PDBE is a material breach of the Agreement, which may result in termination of the Agreement, or such other remedy permitted as the City deems appropriate.

ARTICLE 8 - TIME

8.1 *PROGRESS AND COMPLETION: Add the following Paragraph 8.1.6.1.*

8.1.6.1 Contractor shall credit the City by Change Order for inspection services for overtime work or work performed on Sundays or Legal Holidays. The amount Contractor credits the City will be [$50.00 per hour] per inspector for inspection services.

ARTICLE 9 - PAYMENTS AND COMPLETION

9.12 *LIQUIDATED DAMAGES: Insert the following Paragraph 9.12.1.1.*

9.12.1.1 The amount of liquidated damages payable by Contractor or Surety for each and every day of delay beyond Contract Time, are $1,500.00 per day.

ARTICLE 11 - INSURANCE AND BONDS

11.2 INSURANCE TO BE PROVIDED BY CONTRACTOR: Insert the following Paragraph 11.2.1.2.

11.2.1.2 Contractor shall purchase for the duration of the Contract the insurance set out in Table 2 in addition to the minimum insurance coverage set out in section 11.2.1.

TABLE 2
ADDITIONAL REQUIRED COVERAGE
DEFENSE COSTS EXCLUDED FROM FACE AMOUNT OF POLICY.

(Coverage)	(Limit of Liability)
Property and Casualty Coverage: "All Causes of Loss" Builder's Risk Form for directing physical change to building or plant construction on the Work site and/or all land improvements including all work. (Including but not limited to earthquake, flood, boiler, and machinery including testing, damage to existing or adjoining property, time element coverage, collapse, soft costs	100% of Contract Price, including change orders

(management, architecture, financial costs, pre-opening costs, etc.), transit coverage, off-site storage).

Contractor's Pollution Liability: Including pollution coverage for Contractual Liability, Clean-up costs, Abatement, Transport, and Non-owned disposal sites. Including Bodily Injury Liability, Property Damage Liability, and environmental damage arising from pollution conditions caused in performance of operations. Including Asbestos and Lead if part of operations.	$1,000,000 each occurrence
(MCS - 90 endorsement: to Auto Policy and removal of Pollution Exclusion)	$1,000,000 CSL

11.5 *MAINTENANCE BONDS: Insert the following Paragraph 11.5.2.*

11.5.2 One-year Surface Correction Bond: Contractor shall provide, on the City standard form, an additional One-Year Bond in an amount equal to four percent of the Original Contract Price or cost of repair. Bond shall provide for Contractor's correction, replacement, or restoration of backfill or subsurface and surface work not in accordance with the Contract, within one year from the date the One-Year Maintenance Bond has expired.

END OF DOCUMENT

Document 00805

EQUAL EMPLOYMENT OPPORTUNITY PROGRAM REQUIREMENTS
(City of Houston Information Requirements
for the Successful Bidder on All Construction Contracts)

DOCUMENTS THAT MUST BE SIGNED AND RETURNED TO THE CITY OF HOUSTON PRIOR TO FINAL EXECUTION OF CONTRACT

Certification by Bidder Regarding Equal Employment Opportunity EEO-3

Total Work Force Composition of the Company,..... EEO-6
or in lieu thereof, a copy of the latest Equal Employment Opportunity Commission's EEO-1 form (This information is required only if the Contractor has a work force of 50 or more people and the Contract is $50,000 or more.)

Company's Equal Employment Opportunity Compliance Program EEO-7

INFORMATION THAT MUST BE SUPPLIED DURING THE COURSE OF THE WORK

Certification By Proposed Subcontractor Regarding
Equal Employment Opportunity EEO-26

Certification by Proposed Material Suppliers, Lessors,and
Professional Service Providers Regarding Equal Employment Opportunity..... EEO-29

PLEASE COMPLETE PAGES EEO-3 THROUGH EEO-7 AND MAIL TO:

City of Houston
Mayor's Office of Business Opportunity
Contract Compliance Section
611 Walker, 7th Floor
Houston, Texas 77002
Attention: Director

The remainder of the reports can be mailed at the appropriate time.

EQUAL EMPLOYMENT OPPORTUNITY PROGRAM REQUIREMENTS

The following are Equal Employment Opportunity requirements to be met and documents to be submitted to:

Mayor's Office of Business Opportunity
Contract Compliance Section
611 Walker, 7th Floor
Houston, Texas 77002

Under the conditions and terms of all City construction contracts, the prime contractor is responsible for all Equal Employment Opportunity compliance, including subcontractor compliance.

EQUAL EMPLOYMENT OPPORTUNITY FORMS (EEO Forms)

These forms are submitted by the prime contractors at the beginning of the Project and as requested:

- EEO Forms 3, 6, and 7, by prime contractors

This form is submitted by all subcontractors before they begin work on the project:

- EEO Form 26 by subcontractors

This form is submitted by all suppliers, lessors, or professional services providers before they begin work on the project:

- EEO Form 29

POSTING

The following poster should be clearly displayed on each job site, or in case of annual service agreements, in the Contractor's office:

Equal Employment Opportunity is the Law Poster

JOB SITE VISITS

Site visits will be made by a Contract Compliance Officer, who will make their presence known to the Project Manager, Supervisor, or Foreman, and will conduct interviews with employees on site.

PAYMENT AND EVALUATION

Upon completion of the Project, as part of the contract-awarding department's total clearance process, the Office of Business Opportunity's Contract Compliance Section must certify to the department that all EEO compliance requirements have been met.

CERTIFICATION BY BIDDER REGARDING
EQUAL EMPLOYMENT OPPORTUNITY

GENERAL

In accordance with Executive Order 11246 (30 F.R. 12319-25), the implementing rules and regulations thereof, and orders of the Secretary of Labor, a certification regarding Equal Opportunity is required of bidders or prospective contractors and their proposed subcontractors prior to the award of contracts or subcontracts.

CERTIFICATION OF BIDDER

Bidder's Name:_____

Address:_____

Telephone Number:_____ Fax :_____

Name of the Company's EEO Officer: _____

E-mail Address:_____

Web Page/URL Address:_____

IRS Employer Identification Number:_____

Work to be performed:_____

Project No: _____

1. Participation in a previous contract or subcontract.

   a. Bidder has participated in a previous contract or subcontract subject to the Equal Opportunity Clause. ☐ YES ☐NO

   b. Compliance reports were required to be filed in connection with such contract or subcontract. ☐YES ☐NO

   c. Bidder has filed all compliance reports required by Executive Orders 10925, 11114, 11246, or by regulations of the Equal Employment Opportunity Commission issued pursuant to Title VII of the Civil Rights Act of 1964. ☐ YES ☐NO

   d. If answer of Item c. is "No", please explain in detail on reverse side of this certification.

2. Dollar amount of bid:$ _____

3. Anticipated performance period in days: _____

4. Expected total number of employees to perform the proposed construction: _____

5. Nonsegregated facilities.

a. Notice to prospective federally-assisted construction contractors

(1) A Certification of Nonsegregated Facilities, as required by the May 9, 1967, Order (32 F.R. 7439, May 19, 1967) on Elimination of Segregated Facilities, by the Secretary of Labor, must be submitted to the recipient prior to the award of a federally-assisted construction contract exceeding $10,000 which is not exempt from the provisions of the Equal Opportunity Clause.

(2) Contractors receiving federally-assisted construction contract awards exceeding $10,000 which are not exempt from the provisions of the Equal Opportunity Clause will be required to provide the forwarding of the following notice to prospective subcontractors for supplies and construction contracts where the subcontracts exceed $10,000 and are not exempt from the provisions of the Equal Opportunity Clause.

The federally-assisted construction Contractor certifies that he/she does not maintain or provide any segregated facilities at any of his/her establishments, and does not permit employees to perform their services at any location, under his/her control, where segregated facilities are maintained. The federally-assisted construction Contractor certifies further that he/she will not maintain or provide segregated facilities at any of his/her establishments, and will not permit employees to perform their services at any location, under his/her control, where segregated facilities are maintained. The federally-assisted construction Contractor agrees that a breach of this certification is a violation of the Equal Opportunity Clause in this Contract. As used in this certification, the term "segregated facilities" means any waiting rooms, work areas, restrooms and washrooms, restaurants and other eating areas, time clocks, locker rooms and other storage or dressing areas, parking lots, drinking fountains, recreation or entertainment areas, transportation, and housing facilities provided for employees which are segregated by explicit directive or are in fact segregated on the basis of race, creed, color, or national origin because of habit, local custom, or otherwise. The federally-assisted construction Contractor agrees that (except where he/she has obtained identical certifications from proposed Subcontractors for specific time periods) he/she will obtain identical certifications in duplicate from proposed Subcontractors prior to the award of subcontracts exceeding $10,000 which are not exempt from the provisions of the Equal Opportunity Clause, and that he/she will retain the duplicate of such certifications in his/her files. The Subcontractor will include the original in his/her bid package.

6. Race or ethnic group designation of bidder. Enter race or ethnic group in appropriate box:

☐ White ☐ Black ☐ Hispanic

☐ Pacific Islander, Asian ☐ American Indian, Aleut.

7. Gender of Owner ☐ Male ☐ Female

REMARKS: _____

Certification - The information above is true and complete to the best of my knowledge and belief.

_____
Company Officer (Please Type)

_____ _____
Signature Date

NOTE: The penalty for making false statements in offers is prescribed in 18 U.S.C. 1001.

Total Work Force Composition of the Company

City of Houston, Affirmative Action Requirements for All Construction Contracts

	White		Black		Hispanic		Pacific Islander/ Asian		Alaska Native/ Amer Ind.		Total Persons		Total Minority		Total Female	
	M	F	M	F	M	F	M	F	M	F	M	F	M	F	M	F
Officials and Administrators																
Professionals																
Paraprofessionals																
Technicians																
Protective Service Workers																
Sales Workers																
Office and Clerical																
Skilled Craft Workers																
Operatives (Semi-skilled)																
Laborers (Unskilled)																
Service / Maintenance Workers																
Others																
Total																

This report includes all of the company's permanent work force. For description of job categories, see Pages CC-27 through CC-29.

Check One: **[ ] Contractor** **[ ] Subcontractor** **DATE:** _____

COMPANY: _____

EQUAL EMPLOYMENT OPPORTUNITY COMPLIANCE PROGRAM FOR

_____

Name of Company

The Company's Office of Business Opportunity Program shall consist of documented good faith efforts to comply with the goals, timetables, and objectives set forth in the following Affirmative Action steps:

A. City of Houston's Specific Equal Employment Opportunity Policy and Clause as contained in City Council Ordinance No. 78-1538, passed August 9, 1978.

B. Notice of Requirement for Office of Business Opportunity to ensure Equal Employment Opportunity (Executive Order 11246).

C. Standard Federal Equal Employment Opportunity Construction Contract Specifications (Executive Order 11246).

Project: _____

_____
Company Officer (Please Type)

_____ _____
Signature Date

NOTE: The penalty for making false statements in offers is prescribed in 18 U.S.C. 1001.

SPECIAL PROVISIONS
SPECIFIC EQUAL EMPLOYMENT OPPORTUNITY POLICY

1. GENERAL

   a. Equal employment opportunity requirements not to discriminate and to take affirmative action to assure equal employment opportunity are required by Executive Order 11246, as amended. The requirements set forth in these Special Provisions shall constitute the specific affirmative action requirements for Project activities under this Contract and shall supplement the notice of requirement for affirmative action to ensure equal employment opportunity and standard federal equal employment opportunity construction contract specifications.
   b. The Contractor shall work with the City and the Federal Government in carrying out equal employment opportunity obligations and in their review of his/her activities under the Contract.
   c. The prime Contractor and all Subcontractors holding subcontracts of $10,000 or more shall comply with the following minimum specific requirement activities of equal employment opportunity. The Contractor shall include these requirements in every subcontract of $10,000 or more with such modification of language as is necessary to make them binding on the Subcontractor.

2. EQUAL EMPLOYMENT OPPORTUNITY POLICY

   The Contractor shall accept as his/her operating policy the following statement which is designed to further the provision of equal employment opportunity to all persons without regard to their race, age, color, religion, sex, or national origin, and to promote the full realization of equal employment opportunity through a positive continuing program:

   It is the policy of this Company to assure that applicants are employed, and that employees are treated during employment, without regard to their race, religion, color, sex, or national origin. Such action shall include: employment, upgrading, demotion, or transfer; recruitment or recruitment advertising; layoff or termination; rates of pay or other forms of compensation; and selection for training, including apprenticeship.

3. EQUAL EMPLOYMENT OPPORTUNITY OFFICER

   The Contractor shall designate and make known to the City contracting officers an equal employment opportunity officer (hereinafter referred to as the EEO Officer) who must be capable of effectively administering and promoting an active Contractor program of equal employment opportunity and who must be assigned adequate authority and responsibilities to do so.

4. DISSEMINATION OF POLICY

a. All members of the Contractor's staff who are authorized to hire, supervise, promote, and discharge employees, or who recommend such action, or who are substantially involved in such action, will be made fully cognizant of, and will implement the Contractor's equal employment opportunity policy and contractual responsibilities to provide equal employment opportunity in each grade and classification of employment. To ensure that the above agreement will be met, the following actions shall be taken as a minimum:

(1) Periodic meetings of supervisory and personnel office employees shall be conducted before the start of work and then not less often than once every six months, at which time the Contractor's equal employment opportunity policy and its implementation will be reviewed and explained. The meetings shall be conducted by the EEO Officer or other knowledgeable company official.

(2) All new supervisory or personnel office employees will be given a thorough indoctrination by the EEO Officer, or other knowledgeable company official, covering all major aspects of the Contractor's equal employment opportunity obligations, within 30 days following their reporting for duty with the Contractor.

(3) The EEO Officer or appropriate company official shall instruct all employees engaged in the direct recruitment of employees for the Project relative to the methods followed by the Contractor in locating and hiring minorities and females.

b. In order to make the Contractor's equal employment opportunity policy known to all employees, prospective employees, and potential sources of employees, i.e., schools, employment agencies, labor unions (where appropriate), college placement officers, etc., the Contractor shall take the following actions:

(1) Notices and posters setting forth the Contractor's equal employment opportunity policy shall be placed in areas readily accessible to employees, applicants for employment, and potential employees.

(2) The Contractor's equal employment opportunity policy and the procedures to implement such policy shall be brought to the attention of employees by means of meetings, employee handbooks, or other appropriate means.

5. RECRUITMENT

a. When advertising for employees, the Contractor shall include in all advertisements for employees the notation "An Equal Opportunity Employer". All such advertisements will be published in newspapers, or

other publications, having a large circulation among minority groups in the area from which the Project work force would normally be derived.

b. The Contractor shall, unless precluded by a valid bargaining agreement, conduct systematic and direct recruitment through public and private employee-referral sources likely to yield qualified minority-group applicants, including, but not limited to, State employment agencies, schools, colleges, minority-group organizations, and female recruitment agencies. To meet this requirement, the Contractor shall, through his/her EEO Officer, identify sources of potential minority and female employees, and establish with such identified sources procedures whereby such group applicants may be referred to the Contractor for employment consideration.

In the event the Contractor has a valid bargaining agreement providing for exclusive hiring hall referrals, he/she is expected to observe the provisions of that agreement to the extent that the system permits the Contractor's compliance with equal employment opportunity Contract provisions. (The U. S. Department of Labor has held that where implementation of such agreements has the effect of discriminating against minorities or women, or obligates the Contractor to do the same, such implementation violates Executive Order 11246 as amended).

c. The Contractor shall encourage his/her present employees to refer female or minority-group applicants for employment by posting appropriate notices or bulletins in areas accessible to all such employees. In addition, information and procedures with regard to referring such applicants will be discussed with employees.

6. PERSONNEL ACTIONS

a. Wage, working conditions, and employee benefits shall be established and administered, and personnel actions of every type, including hiring, upgrading, promotion, transfer, demotion, layoff and termination, shall be taken without regard to race, color, religion, sex, national origin, or age. The following procedures shall be followed:

(1) The Contractor shall conduct periodic inspections of Project sites to ensure that working conditions and employee facilities do not indicate discriminatory treatment of Project-site personnel.

(2) The Contractor shall periodically evaluate the spread of wages paid within each classification to determine any evidence of discriminatory wage practices.

(3) The Contractor shall periodically review selected personnel actions in depth to determine whether there is evidence of discrimination. Where evidence is found, the Contractor shall promptly take corrective action. If the review indicates that the discrimination may extend beyond the actions reviewed, such corrective action shall include all affected persons.

(4) The Contractor shall promptly investigate all complaints of alleged discrimination made in connection with his/her obligations under this Contract, shall attempt to resolve such complaints, and shall take appropriate corrective action. If the investigation indicates that the discrimination may affect persons other than the complainant, such corrective action shall include such other persons. Upon completion of each investigation, the Contractor shall inform every complainant of all avenues of appeal.

7. TRAINING AND PROMOTION

a. The Contractor shall assist in locating, qualifying, and increasing the skills of minority-group and women employees and applicants for employment.

b. Consistent with the Contractor's work force requirements and as permissible under Federal and State regulations, the Contractor shall make full use of training programs, i.e., apprenticeship and on-the-job training programs, for the geographical area of Contract performance.

c. The Contractor shall advise employees and applicants for employment of available training programs and entrance requirements for each.

d. The Contractor shall periodically review the training and promotion potential of minority-group and women employees and shall encourage eligible employees to apply for such training and promotion.

8. UNIONS

If the Contractor relies in whole or in part upon unions as a source of employees, he/she shall use his/her best efforts to obtain the cooperation of such unions to increase minority groups and women within the unions, and to effect referrals by such unions of minority and female employees. Actions by the Contractor, either directly or through a contractor's association acting as his/her agent, will include the procedures set forth below:

a. The Contractor shall use best efforts to develop, in cooperation with the unions, joint training programs aimed toward qualifying more minority-group members and women for membership in the unions and increasing the skills of minority-group employees and women so that they may qualify for higher-paying employment.

b. The Contractor shall use best efforts to incorporate an equal employment opportunity clause into all union agreements to the end that such unions will be contractually bound to refer applicants without regard to their race, color, religion, sex, national origin, or age.

c. The Contractor is to obtain information as to the referral practices and policies of the labor union, except that to the extent such information is within the exclusive possession of the labor union, and such labor union refuses to furnish such information to the Contractor, the Contractor shall so certify to the City and shall set forth what efforts have been made to obtain such information.

d. In the event the union is unable to provide the Contractor with a reasonable flow of minority and women referrals within the time limit set forth in the collective bargaining agreement, the Contractor shall, through independent recruitment efforts, fill the employment vacancies without regard to race, color, religion, age, sex, or national origin, making full efforts to obtain qualified and/or qualifiable minority group persons and women. (The U. S. Department of Labor has held that it shall be no excuse that the union with which the Contractor has a collective bargaining agreement providing for exclusive referral failed to refer minority employees.) In the event the union referral practice prevents the Contractor from meeting the obligations pursuant to Executive Order 11246, as amended, and these special provisions, such Contractor shall immediately notify the City.

9. SUBCONTRACTING

a. The Contractor shall use his/her best efforts to solicit bids from and to utilize minority-group and female subcontractors or subcontractors with meaningful minority-group and/or female representation among their employees.

b. The Contractor shall use his/her best efforts to assure Subcontractors' compliance with their equal employment opportunity obligations.

10. RECORDS AND REPORTS

a. The Contractor shall keep such records as are necessary to determine compliance with the Contractor's equal employment opportunity obligations. The records kept by the Contractor will be designed to indicate:

(1) The number of minority and non-minority group members and women employed in each work classification on the Project.

(2) The progress and efforts being made in cooperation with unions to increase employment opportunities for minorities and women (applicable only to contractors who rely in whole or in part on unions as a source of their work force).

(3) The progress and efforts being made in locating, hiring, training, qualifying, and upgrading minority and female employees.

(4) The progress and efforts being made in securing the services of female and minority subcontractors.

b. All records, including payrolls, must be retained for a period of three years following completion of the Contract work and shall be available at reasonable times and places for inspection by authorized representatives of the City and/or the appropriate federal agency.

CITY OF HOUSTON, TEXAS

EQUAL EMPLOYMENT OPPORTUNITY CLAUSE

Pursuant to City Council Ordinance No. 78-1538, passed August 9, 1978, all contracts entered into by the City of Houston involving the expenditure of $10,000 or more, shall incorporate the following Equal Employment Opportunity Clause:

1. The Contractor, Subcontractor, vendor, Supplier, or lessee shall not discriminate against any employee or applicant for employment because of race, religion, color, sex, national origin, or age. The Contractor, Subcontractor, vendor, Supplier, or lessee shall take affirmative action to ensure that applicants are employed and that employees are treated during employment without regard to their race, religion, color, sex, national origin, or age. Such action will include, but not be limited to, the following: employment; upgrading; demotion or transfer; recruitment advertising; layoff or termination; rates of pay or other forms of compensation; and selection for training, including apprenticeship. The Contractor, Subcontractor, vendor, Supplier, or lessee agrees to post in conspicuous places available to employees, and applicants for employment, notices to be provided by the City setting forth the provisions of this Equal Employment Opportunity Clause.

2. The Contractor, Subcontractor, vendor, Supplier, or lessee states that all qualified applicants will receive consideration for employment without regard to race, religion, color, sex, national origin, or age.

3. The Contractor, Subcontractor, vendor, Supplier, or lessee shall send to each labor union or representatives of workers with which it has a collective bargaining agreement or other contract or understanding, a notice to be provided by the agency contracting officer advising the said labor union or workers' representative of the Contractor's and Subcontractor's commitments under Section 202 of Executive Order No. 11246, and shall post copies of the notice in conspicuous places available to employees and applicants for employment.

4. The Contractor, Subcontractor, vendor, Supplier, or lessee will comply with all provisions of Executive Order No. 11246 and the rules, regulations, and relevant orders of the Secretary of Labor or other Federal Agency responsible for enforcement of the equal opportunity and affirmative action provisions applicable, and shall likewise furnish all information and reports required by the Mayor and/or Contractor Compliance Officers for purposes of investigation to ascertain and effect compliance with this program.

5. The Contractor, Subcontractor, vendor, Supplier, or lessee shall furnish all information and reports required by Executive Order No. 11246, and by the rules, regulations, and orders of the Secretary of Labor, or pursuant thereto, and shall permit access to all books, records, and accounts by the appropriate City and Federal officials for purposes of investigation to ascertain compliance with such rules, regulations, and orders. Compliance reports filed at such times as directed shall contain information as to the employment practice policies, program, and work force statistics of the Contractor, Subcontractor, vendor, Supplier, or lessee.

6. In the event of a Contractor's, Subcontractor's, vendor's, Supplier's, or lessee's non-compliance with the non-discrimination clause of this Contract or with any of such rules, regulations, or orders, this Contract may be canceled, terminated, or suspended in whole or in part, and the Contractor, Subcontractor, vendor, Supplier, or lessee may be declared ineligible for further City contracts in accordance with procedures provided in Executive Order No. 11246, and such other sanctions may be imposed and remedies invoked as provided in said Executive Order, or by rule, regulation, or order of the Secretary of Labor, or as may otherwise be provided by law.

7. The Contractor shall include the provisions of paragraphs 1 through 8 of this Equal Employment Opportunity Clause in every subcontract or purchase order unless exempted by rules, regulations, or orders of the Secretary of Labor issued pursuant to Section 204 of Executive Order No. 11246 of September 24, 1965 so that such provisions will be binding upon each Subcontractor or vendor. The Contractor shall take such action with respect to any subcontractor or purchase order as the contracting agency may direct as a means of enforcing such provisions, including sanctions for noncompliance; provided, however, that in the event the Contractor becomes involved in, or is threatened with litigation with a Subcontractor or vendor as a result of such direction by the contracting agency, the Contractor may request the United States to enter into such litigation to protect the interests of the United States.

8. The Contractor shall file and shall cause each of his Subcontractors, if any, to file compliance reports with the City in the form and to the extent as may be prescribed by the Mayor's Office of Business Opportunity. Compliance reports filed at such times as directed shall contain information as to the practices, policies, programs, employment policies, and employment statistics of the Contractor and each Subcontractor.

NOTICE OF REQUIREMENT FOR AFFIRMATIVE ACTION
TO ENSURE EQUAL EMPLOYMENT OPPORTUNITY
(EXECUTIVE ORDER 11246)

1. The Offeror's or Bidder's attention is called to the "Equal Opportunity Clause" and the "Standard Federal Equal Employment Opportunity Construction Contract Specifications" set forth herein.

2. The goals and timetables for minority and female participation, expressed in percentage terms for the Contractor's aggregate work force in each trade on all construction work in the covered area, are as follows:

Timetable	Goals for Minority Participation for Each Trade	Goals for Female Participation for Each Trade
	26.2% - 27.3%	6.9%

These goals are applicable to all the Contractor's construction work (whether or not it is Federal or Federally-assisted) performed in the covered area.

The Contractor's compliance with the Executive Order and the regulations in 41 CFR Part 60-4 shall be based on its implementation of the Equal Opportunity Clause, specific affirmative action obligations required by the specifications set forth in 41 CFR 60-4.3(a), and its efforts to meet the goals established for the geographical area where the Contract resulting from this solicitation is to be performed. The hours of minority and female employment and training must be substantially uniform throughout the length of the Contract, and in each trade, and the Contractor shall make a good faith effort to employ minorities and women evenly on each of its projects. The transfer of minority or female employees or trainees from Contractor to Contractor or from project to project for the sole purpose of meeting the Contractor's goals shall be a violation of the Contract, the Executive Order, and regulations in 41 CFR part 60-4. Compliance with the goals will be measured against the total work hours performed.

3. The Contractor shall provide written notification to the Director of the Office of Federal Contract Compliance Programs within 10 working days of award of any construction subcontract in excess of $10,000 at any tier for construction work under the Contract resulting from this solicitation. The notification shall list the name, address, and telephone number of the Subcontractor; employer identification number; estimated dollar amount of the subcontract; estimated starting and completion dates of the subcontract; and the geographical area in which the Contract is to be performed.

4. As used in this Notice, and in the Contract resulting from this solicitation, the "covered area" is The Houston, Texas Standard Metropolitan Statistical Area.

STANDARD FEDERAL EQUAL EMPLOYMENT OPPORTUNITY
CONSTRUCTION CONTRACT SPECIFICATIONS
(EXECUTIVE ORDER 11246)

1. As used in these specifications:

   a. "Covered area" means the geographical area described in the solicitation from which this Contract resulted;

   b. "Director" means Director, Office of Federal Contract Compliance Programs, United States Department of Labor, or any person to whom the Director delegates authority;

   c. "Employer identification number" means the Federal Social Security number used on the Employer's Quarterly Federal Tax Return, U. S. Treasury Department Form 941.

   d. "Minority" includes:

      (i) Black (all persons having origins in any of the Black African racial groups not of Hispanic origin);

      (ii) Hispanic (all persons of Mexican, Puerto Rican, Cuban, Central or South American, or other Spanish culture or origin regardless of race);

      (iii) Asian and Pacific Islander (all persons having origins in any of the original peoples of the Far East, Southeast Asia, the Indian Subcontinent, or the Pacific Islands); and

      (iv) American Indian or Alaskan Native (all persons having origins in any of the original peoples of North America and maintaining identifiable tribal affiliations through membership and participation or community identification).

2. Whenever the Contractor, or any Subcontractor at any tier, subcontracts a portion of the work involving any construction trade, it shall physically include in each subcontract in excess of $10,000 the provisions of these specifications and the Notice which contains the applicable goals for minority and female participation and which is set forth in the solicitations from which this Contract resulted.

3. If the Contractor is participating (pursuant to 41 CFR 60-4.5) in a Hometown Plan approved by the U. S. Department of Labor in the covered area either individually or through an association, its affirmative action obligations on all work in the Plan area (including goals and timetables) shall be in accordance with that Plan for

those trades which have unions participating in the Plan. Contractors must be able to demonstrate their participation in and compliance with the provisions of any such Hometown Plan. Each Contractor or Subcontractor participating in an approved Plan is individually required to comply with its obligations under the EEO clause, and to make a good faith effort to achieve each goal under the Plan in each trade in which it has employees. The overall good faith performance by other Contractors or Subcontractors toward a goal in an approved Plan does not excuse any covered Contractor's or Subcontractor's failure to take good efforts to achieve the Plan goals and timetables.

4. The Contractor shall implement the specific affirmative action standards provided in Paragraphs 7a through p of these specifications. The goals set forth in the solicitation from which this Contract resulted are expressed as percentages of the total hours of employment and training of minority and female utilization the Contractor should reasonably be able to achieve in each construction trade in which it has employees in the covered area. The Contractor is expected to make substantially uniform progress toward its goals in each craft during the period specified.

5. Neither the provisions of any collective bargaining agreement, nor the failure by a union with whom the Contractor has a collective bargaining agreement to refer either minorities or women, shall excuse the Contractor's obligations under these specifications, Executive Order 11246, or the regulations promulgated pursuant thereto.

6. In order for the non-working training hours of apprentices and trainees to be counted in meeting the goals, such apprentices and trainees must be employed by the Contractor during the training period, and the Contractor must have made a commitment to employ the apprentices and trainees at the completion of their training, subject to the availability of employment opportunities. Trainees must be trained pursuant to training programs approved by the U. S. Department of Labor.

7. The Contractor shall take specific affirmative actions to ensure equal employment opportunity. The evaluation of the Contractor's compliance with these specifications shall be based upon its effort to achieve maximum results from its actions. The Contractor shall document these efforts fully, and shall implement affirmative action steps at least as extensive as the following:

   a. Ensure and maintain a working environment free of harassment, intimidation, and coercion at all sites, and in all facilities at which Contractor's employees are assigned to work. The Contractor, where possible, shall assign two or more women to each construction project. The Contractor shall specifically ensure that all foremen, superintendents, and other on-site supervisory personnel are aware of and carry out the Contractor's obligation to maintain such a working environment, with specific attention to minority or female individuals working at such sites or in such facilities.

b. Establish and maintain a current list of minority and female recruitment sources; provide written notification to minority and female recruitment sources and to community organizations when the Contractor or its unions have employment opportunities available, and maintain a record of the organizations' responses.

c. Maintain a current file of the names, addresses, and telephone numbers of each minority and female off-the-street applicant and minority or female referral from a union, a recruitment source, or community organization and of what action was taken with respect to each such individual. If such individual was sent to the union hiring hall for referral and was not referred back to the Contractor by the union or, if referred, not employed by the Contractor, this shall be documented in the file with the reason therefor, along with whatever additional actions the Contractor may have taken.

d. Provide immediate written notification to the Director when the union or unions with which the Contractor has a collective bargaining agreement has not referred to the Contractor a minority person or woman sent by the Contractor, or when the Contractor has other information that the union referral process has impeded the Contractor's efforts to meet its obligations.

e. Develop on-the-job training opportunities and/or participate in training programs for the area which expressly include minorities and women, including upgrading programs and apprenticeship and trainee programs relevant to the Contractor's employment needs, especially those programs funded or approved by the Department of Labor. The Contractor shall provide notice of these programs to the sources compiled under 7b above.

f. Disseminate the Contractor's EEO policy by providing notice of the policy to unions and training programs and requesting their cooperation in assisting the Contractor in meeting its EEO obligations by including it in any policy manual and collective bargaining agreement; by publicizing it in the company newspaper, annual report, etc.; by specific review of the policy with all management personnel and with all minority and female employees at least once a year; and by posting the company EEO policy on bulletin boards accessible to all employees at each location where construction work is performed.

g. Review, at least annually, the company's EEO policy and affirmative action obligations under these specifications with all employees having any responsibility for hiring, assignment, layoff, termination, or other employment decisions, including specific review of these items with on-site supervisory personnel such as superintendents, general foremen, etc., prior to the initiation of construction work at any job site. A written record shall be made and maintained identifying the time and place of

these meetings, persons attending, subject matter discussed, and disposition of the subject matter.

h. Disseminate the Contractor's EEO policy externally by including it in any advertising in the news media, specifically including minority and female news media, and providing written notification to and discussing the Contractor's EEO policy with other contractors and subcontractors with whom the Contractor does or anticipates doing business.

i. Direct its recruitment efforts, both oral and written, to minority, female and community organizations, to schools with minority and female students, and to minority and female recruitment and training organizations serving the Contractor's recruitment area and employment needs. Not later than one month prior to the date for the acceptance of applications for apprenticeship or other training by any recruitment source, the Contractor shall send written notification to organizations such as the above, describing the openings, screening procedures, and tests to be used in the selection process.

j. Encourage present minority and female employees to recruit other minority persons and women and, where reasonable, provide after school, summer, and vacation employment to minority and female youth both on the site and in other areas of a Contractor's work force.

k. Validate all tests and other selection requirements where there is an obligation to do so under 41 CFR Part 60-3.

l. Conduct, at least annually, an inventory and evaluation at least of all minority and female personnel for promotional opportunities and encourage these employees to seek or to prepare, through appropriate training, etc., for such opportunities.

m. Ensure that seniority practices, job classifications, work assignments, and other personnel practices do not have a discriminatory effect by continually monitoring all personnel and employment-related activities to ensure that the EEO policy and the Contractor's obligations under these specifications are being carried out.

n. Ensure that all facilities and company activities are nonsegregated except that separate or single-user toilet and necessary changing facilities shall be provided to assure privacy between the sexes.

o. Document and maintain a record of all solicitations of offers for subcontracts from minority and female construction contractors and suppliers, including circulation of solicitations to minority and female contractor associations and other business associations.

p. Conduct a review, at least annually, of all supervisors' adherence to and performance under the Contractor's EEO policies and affirmative action obligations.

8. Contractors are encouraged to participate in voluntary associations which assist in fulfilling one or more of their affirmative action obligations (7a through p). The efforts of a contractor association, joint contractor union, contractor-community, or other similar group of which the Contractor is a member and participant, may be asserted as fulfilling any one or more of its obligations under 7a through p of these Specifications provided that the Contractor actively participates in the group, makes every effort to assure that the group has a positive impact on the employment of minorities and women in the industry, ensures that the concrete benefits of the program are reflected in the Contractor's minority and female work force participation, makes a good faith effort to meet its individual goals and timetables, and can provide access to documentation which demonstrates the effectiveness of actions taken on behalf of the Contractor. The obligation to comply, however, is the Contractor's and failure of such a group to fulfill an obligation shall not be a defense for the Contractor's noncompliance.

9. A single goal for minorities and a separate single goal for women have been established. The Contractor, however, is required to provide equal employment opportunity and to take affirmative action for all minority groups, both male and female, and all women, both minority and non-minority. Consequently, the Contractor may be in violation of the Executive Order if a particular group is employed in a substantially disparate manner (for example, even though the Contractor has achieved its goals for women generally, the Contractor may be in violation of the Executive Order if a specific minority group of women is under utilized).

10. The Contractor shall not use the goals and timetables or affirmative action standards to discriminate against any person because of race, color, religion, sex, or national origin.

11. The Contractor shall not enter into any subcontract with any person or firm debarred from Government contracts pursuant to Executive Order 11246.

12. The Contractor shall carry out such sanctions and penalties for violation of these specifications and of the Equal Opportunity Clause, including suspension, termination, and cancellation of existing subcontracts as may be imposed or ordered pursuant to Executive Order 11246, as amended, and its implementing regulations, by the Office of Federal Contract Compliance Programs. Any Contractor who fails to carry out such sanctions and penalties shall be in violation of these specifications and Executive Order 11246, as amended.

13. The Contractor, in fulfilling its obligations under these specifications, shall implement specific affirmative action steps, at least as extensive as those standards prescribed in Paragraph 7 of these specifications, so as to achieve maximum results from its efforts to ensure equal employment opportunity. If the

Contractor fails to comply with the requirements of the Executive Order, the implementing regulations, or these specifications, the Director shall proceed in accordance with 41 CFR 60-4.B.

14. The Contractor shall designate a responsible official to monitor all employment-related activity to ensure that the company EEO policy is being carried out, to submit reports relating to the provisions hereof as may be required by the Government, and to keep records. Records shall at least include for each employee the name, address, telephone number, construction trade, union affiliation, if any, employee identification number when assigned, social security number, race, sex, status (e.g., mechanic, apprentice, trainee, helper, or laborer), dates of changes in status, hours worked per week in the indicated trade, rate of pay, and locations at which the work was performed. Records shall be maintained in an easily-understandable and retrievable form; however to the degree that existing records satisfy this requirement, contractors shall not be required to maintain separate records.

15. Nothing herein provided shall be construed as a limitation upon the application of other laws which establish different standards of compliance or upon the application of requirements for the hiring of local or other area residents (e.g., those under the Public Works Employment Act of 1977 and the Community Development Block Grant Program).

DESCRIPTION OF JOB CATEGORIES

Officials, Managers, and Administrators

Occupations requiring administrative personnel who set board policies, exercise overall responsibility for the execution of these policies, or provide specialized consultation on a regional, district, area basis, or direct individual departments or special phases of a firm's operations.

Includes: Officials, executives, middle management, plant managers, department managers, superintendents, salaried foremen who are members of management, purchasing agents, buyers, bureau chiefs, directors, deputy directors, wardens, examiners, sheriffs, police and fire chiefs, and kindred workers.

Professionals

Occupations which require specialized and theoretical knowledge which is usually acquired through college or experience of such kind and amount as to provide a comparable background.

Includes: Accountants, auditors, airplane pilots and navigators, architects, artists, chemists, designers, dieticians, editors, engineers, lawyers, librarians, mathematicians, natural scientists, registered professional nurses, personnel and labor relations workers, physical scientists, teachers, social workers, doctors, psychologists, economists, systems analysts, employment and vocational rehabilitation counselors, instructors, police and fire captains and lieutenants, and kindred workers.

Paraprofessionals

Occupations in which workers perform some of the duties of a professional or technician in a supportive role, which usually requires less formal training and/or experience normally required for professional or technical status. Such positions may fall within an identified pattern of a "New Careers" concept.

Includes: Library assistants, medical aides, child support workers, police auxiliary, welfare service aides, recreation assistants, homemakers aides, home health aides, and kindred workers.

Technicians

Occupations requiring a combination of basic scientific knowledge and manual skill which can be obtained through about two (2) years of post high school education, such as is offered in many technical institutes and junior colleges, or through equivalent on-the-job training.

Includes: Computer programmers and operators, draftsmen, engineering aides, junior engineers, mathematical aides, licensed practical or vocational nurses, photographers, radio operators, scientific assistants, surveyors, technical illustrators, technicians (medical, dental, electronics, physical sciences), police and fire sergeants, and kindred workers.

Protective Service Workers

Occupations in which workers are entrusted with public safety, security, and protection from destructive forces.

Includes: Police patrol officers, fire fighters, guards, deputy sheriffs, bailiffs, correctional officers, detectives, marshals, harbor patrol officers, and kindred workers.

Sales Workers

Occupations engaging wholly or primarily in direct selling.

Includes: Advertising agents and salespersons, insurance agents and brokers, real estate agents and brokers, stock and bond salespersons, demonstrators, salespersons and sales clerks, grocery clerks, cashiers, and kindred workers.

Office and Clerical

Occupations in which workers are responsible for internal and external communications, recording and retrieval of data and/or information and other paper work required in an office predominantly non-manual, though some manual work not directly involved with altering or transporting the products is included.

Includes: Bookkeepers, cashiers, collectors (bills and accounts), messengers and office helpers, office machine operators, shipping and receiving clerks, stenographers, typists and secretaries, telegraph and telephone operators, court transcribers, hearing reporters, statistical clerks, dispatchers, license distributors, payroll clerks, and kindred workers.

Skilled Craft Workers

Occupations in which workers perform jobs which require special manual skill through on-the-job training and experience, or through apprenticeship or other formal training programs. These workers exercise considerable independent judgment and usually receive an extensive period of training.

Includes: The building trades, hourly paid foremen and leadmen who are not members of management, mechanics and repairmen, skilled machining occupations, compositors and typesetters, electricians, engravers, job setters

(metal), motion picture projectionists, pattern and model makers, stationary engineers, tailors, heavy equipment operators, carpenters, and kindred workers.

Operatives (semi-skilled)

Workers who operate machine or processing equipment or perform other factory-type duties of intermediate skill level which can be mastered in a few weeks and require only limited training.

Includes: Apprentices (auto mechanics), plumbers, bricklayers, carpenters, electricians, mechanics, building trades, metal workers, machinists, printing trades, operatives, attendants (auto service and parking), blasters, chauffeurs, deliverymen, dressmakers and seamstresses (except factory), dryers, furnacemen, heaters (metal), laundry and dry cleaning operatives, milliners, miners, motormen, oilers, greasers, etc. (except auto), painters (except construction and maintenance), photographic process workers, stationary firemen, truck and tractor drivers, weavers (textile), welders and flame cutters, and kindred workers.

Laborers (unskilled)

Workers in manual occupations which generally require no special training. These workers perform elementary duties that may be learned in a few days and require the application of little or no independent judgment.

Includes: Garage workers, car washers and greasers, gardeners (except farm) and groundskeepers, longshoremen and stevedores, lumbermen, craftsmen, and wood choppers, laborers performing lifting, digging, mixing, loading, and pulling operations, and kindred workers.

Service/Maintenance Workers

Occupations in which workers perform duties which result in or contribute to the comfort, convenience, hygiene or safety for the general public or which contribute to the upkeep and care of buildings, facilities or grounds, or public property. Workers in this group may operate machinery.

Includes: Chauffeurs, laundry and dry cleaning operatives, truck drivers, trash collectors, custodial personnel, gardeners and groundskeepers, construction laborers, attendants (hospital and other institutions), professional and personal service, counter and fountain workers, elevator operators, firemen and fire protection, guards, watchmen and doorkeepers, stewards, porters, waiters, and kindred workers.

CERTIFICATION BY PROPOSED SUBCONTRACTOR REGARDING EQUAL EMPLOYMENT OPPORTUNITY

_____
Name of Prime Contractor

_____
Address

GENERAL

In accordance with Executive Order 11246 (30 F.R. 12319-25), the implementing rules and regulations thereof, and orders of the Secretary of Labor, a certification regarding Equal Opportunity is required of bidders or prospective contractors and their proposed subcontractors prior to the award of contracts or subcontracts.

SUBCONTRACTOR'S CERTIFICATION

Subcontractor's Name: _____

Address: _____

IRS Employer Identification Number: _____

Job Description : _____

1. Participation in a previous contract or subcontract.

   a. Subcontractor has participated in a previous contract or subcontract subject to the Equal Opportunity Clause. ____YES ____NO

   b. Compliance reports were required to be filed in connection with such contract or subcontract. ____YES ____NO

   c. Subcontractor has filed all compliance reports required by Executive Orders 10925, 11114, 11246, or by regulations of the Equal Employment Opportunity Commission issued pursuant to Title VII of the Civil Rights Act of 1964. ____YES ____NO

   d. If answer of Item c. is "No", please explain in detail on reverse side of this certification.

2. Dollar amount of proposed subcontract: $ _____

3. Anticipated performance period in days: _____

4. Expected total number of employees to perform the proposed subcontract: _____

5. Nonsegregated facilities.

   a. Notice to prospective federally-assisted construction contractors

      (1) A Certification of Nonsegregated Facilities, as required by the May 9, 1967, order (32 F.R. 7439, May 19, 1967) on Elimination of Segregated Facilities, by the Secretary of Labor, must be submitted to the Contractor prior to the award of a subcontract exceeding $10,000 which is not exempt from the provisions of the Equal Opportunity Clause.

      (2) Contractors receiving subcontract awards exceeding $10,000 which are not exempt from the provisions of the Equal Opportunity Clause will be required to provide for the forwarding of this notice to prospective subcontractors for supplies and construction contracts where the subcontracts exceed $10,000 and are not exempt from the provisions of the Equal Opportunity clause.

   b. Certification of non-segregated facilities

      The federally-assisted construction contractor certified that he/she does not maintain or provide any segregated facilities at any of his/her establishments, and does not permit employees to perform their services at any location, under his/her control, where segregated facilities are maintained. The federally-assisted construction Contractor certifies further that he/she will not maintain or provide any segregated facilities at any of his/her establishments, and will not permit employees to perform their services at any location, under his/her control, where segregated facilities are maintained. The federally-assisted construction Contractor agrees that a breach of this certification is a violation of the Equal Opportunity Clause in this Contract. As used in this certification, the term "segregated facilities" means any waiting rooms, work areas, restrooms and washrooms, restaurants, and other eating areas, time clocks, locker rooms and other storage or dressing areas, parking lots, drinking fountains, recreation or entertainment areas, transportation, and housing facilities provided for employees which are segregated by explicit directive or are in fact segregated on the basis of race, creed, color, or national origin because of habit, local custom, or otherwise. The federally-assisted construction Contractor agrees that (except where he/she has obtained identical certifications from proposed Subcontractors for specific time periods) he/she will obtain identical certifications in duplicate from proposed Subcontractors prior to the award of subcontracts exceeding $10,000 which are not exempt from the provisions of the Equal Opportunity Clause, and that he/she will retain the duplicate of such certifications in his/her files. The Contractor will include the original in his/her Bid Package.

6. Race or ethnic group designation of bidder. Enter race or ethnic group in appropriate box:

☐ White ☐ Black ☐ Hispanic

☐ Pacific Islander, Asian ☐ American Indian, Aleut.

7. Gender

☐ Male ☐ Female

REMARKS: _

Certification - The information above is true and complete to the best of my knowledge and belief.

_____

Company Officer (Please Type)

_____ _____

Signature Date

NOTE: The penalty for making false statements in offers is prescribed in 18 U.S.C. 1001.

Certification by Proposed Material Suppliers, Lessors, and Professional Service Providers Regarding Equal Employment Opportunity

Company Name: _____ $_____
(Supplier, Lessor, Professional Service Provider) (Amount of Contract)

Company Address: _____

Company Telephone Number: _____ Fax: _____

E-mail Address: _____

Web Page/URL Address: _____

Company Tax Identification Number: _____

Project No.: WBS No. M-000265-0002-4

Project Name: Rampart Street (Sub-Project 2) Drainage and Paving

In accordance with the City of Houston Ordinance 78-1538, Supplier/Lessor/Professional Service Provider represents to be an equal opportunity employer and agrees to abide by the terms of the Ordinance. This certification is required of all Suppliers/Lessors/Professional Service Providers (herein Supplier) with contracts in the amount of $10,000.00 or more.

[ ] Yes [ ] No Supplier agrees not to discriminate against any employee or applicant for employment because of race, religion, color, sex, national origin, or age.

[ ] Yes [ ] No Supplier agrees that all qualified applicants will receive consideration for employment without regard to race, religion, color, sex, national origin, or age.

[ ] Yes [ ] No Supplier will comply with all provisions of Executive Order No. 11246 and rules, regulations and applicable orders of the Department of Labor or other Federal Agency responsible for enforcement of applicable equal opportunity and affirmative action provisions and will likewise furnish all information and reports required by the Mayor or Contract Compliance Officers for the purpose of investigation to ascertain and effect compliance with the City of Houston's Office of Affirmative Action and Contract Compliance.

[ ] Yes [ ] No The Supplier shall file and cause their sub-tier contractors to file compliance reports with the City in the form and to the extent as may be prescribed by the Mayor or Contract Compliance Officers. Compliance reports filed at such times as directed shall contain information including, but not limited to, the practices, policies, programs, and employment policies.

I hereby certify that the above information is true and correct.

_____ _____
COMPANY OFFICER (Signature) DATE

_____
NAME AND TITLE (Print or type)

END OF DOCUMENT

Document 00808

REQUIREMENTS FOR THE CITY OF HOUSTON PROGRAM FOR MINORITY, WOMEN, AND SMALL BUSINESS ENTERPRISES AND PERSONS WITH DISABILITIES ENTERPRISES (PDBE)

CONSTRUCTION CONTRACTS

I. GENERAL

A. CITY AUTHORITIES

1. The "OBO Director" is the City of Houston's Office of Business Opportunity Director, or his or her designee.
City of Houston
611 Walker Street, 7th Floor
Houston, Texas 77002

2. The "Contracting Department" for this Project is the City of Houston Department specified in Document 00520 – Agreement.

3. The "Project Manager" is for this Project specified in Document 00550 – Contract Approval Notification.

II. REOCCURRING REPORTS THAT MUST BE SUBMITTED DURING THE COURSE OF THE CONTRACT:

A. MWSBE MONTHLY REPORT PROCESS

The Contractor shall complete the MWSBE Monthly Utilization Report in the Contract Compliance and Monitoring System (available at https://houston.mwdbe.com/).

B. The Contractor shall comply with further, applicable instructions regarding reporting and compliance as provided in Sections III.E and III.I below.

III. BUSINESS ENTERPRISE PROGRAM REQUIREMENTS:

A. PURPOSE

This Document facilitates implementation of City of Houston, Tex. Code of Ordinances Chapter 15, Article V, § 15-81 et seq., relating to MWSBE contract participation, and Code of Ordinances Chapter 15, Article VI, § 15-90 et seq., relating to PDBE contract participation (collectively, the "Business Enterprise Program or "MWSBE"). City of Houston, Tex. Ordinance 2013-0428, May 8, 2013.

B. POLICY

It is the policy of the City to encourage the full participation of Minority and Women-owned Business Enterprises, Small Business Enterprises, and Persons with Disabilities Business Enterprises in all phases of its procurement activities and to afford them a full and fair opportunity to compete for City contracts at all levels.

C. POLICY ELEMENTS

1. The Contractor agrees to ensure that MWSBE firms have a full and fair opportunity to participate in the performance of City contracts. In this regard the Contractor shall make all reasonable Good Faith Efforts to meet the Contract Goals for this Contract.

2. The Contractor and any Subcontractor shall not discriminate on the basis of race, color, religion, national origin, or sex in the performance of City contracts.

3. Contractor's performance in meeting the Participation Plan Percentage will be monitored during the construction phase of the Contract by the OBO Director and Contracting Department.

D. PERCENTAGE GOALS

The MWSBE goals and PDBE goals, if any, for the Work are specified in Document 00800 – Supplementary Conditions Goals.

E. CONTRACTOR RESPONSIBILITIES

1. Prior to Award:

The Bidder shall submit MWSBE documents in accordance with the requirements of Document 00410 – Bid Form Part A.

a. In accordance with the Code of Ordinances and the OBO Good Faith Efforts Policy (Attachment A), the Department shall approve an Apparent Low Bidder's MWSBE Participation Plan–Document 00470 (the "Bidder's Plan" or "Plan") within 3 business days of the Bid Opening only if the Department representative determines that Bidder's Plan meets the advertised Contract Goal and is administratively complete.

b. If the Department cannot approve the Bidder's Plan, it shall forward the Plan to the OBO Director, who shall review the Bidder's Plan, and if applicable, the Bidder's Document 00471 (Record of Good Faith Efforts) and Document 00472 (Pre-Award Deviation Request) and determine whether the Bidder has made Good Faith Efforts to meet the Contract Goals within 10 business days of the Bid Opening.

c. If the OBO Director determines that the Bidder has failed to provide a valid participation plan or make Good Faith Efforts or if the Bidder fails to provide documents and associated information required by this Document 00808 or reasonably requested in writing by the OBO Director, the OBO Director may declare the Bidder to be non-responsible.

d. If the OBO Director determines that the Bidder has made Good Faith Efforts, the Director may approve the Bidder's Contract Goal Deviation request. Thereafter, the Bidder/Contractor shall be bound by the Plan, as approved by the OBO Director.

e. The Contractor shall:

(1) ensure that all MWSBE firms listed in the Plan are certified by the Office of Business Opportunity prior to bid date. Qualified, non-certified firms may obtain priority consideration for certification if no more than two firms are certified with the same capability as the non-certified firm.

(2) execute written contracts with all certified Subcontractors and Suppliers. All such contracts must be executed and sent to the OBO Director and Contracting Department within 30 days after the date of the Notice to Proceed and must include provisions set forth in Articles 3 and 5 of Document 00700 - General Conditions.

(3) designate an MWSBE liaison officer who will administer the Contractor's MWSBE program and who shall document and maintain records of Good Faith Efforts to subcontract with MWSBE Subcontractors and Suppliers.

2. After Award:

a. The Contractor shall submit MWSBE Monthly Utilization Reports, requested in Article II above.

b. The Contractor shall complete and submit to the OBO Director a Post-Award Deviation Request–Document 00572 ("Post-Award Deviation Request") if the Contractor reasonably believes that it will not achieve the Business Enterprise Program Participation Plan Percentage documented in the Plan. The Contractors shall also submit to the OBO Director, with a Copy to the Contracting Department, a Record of Post-Award Good Faith Efforts (Document 00571) for each Certified Firm that the Contractor does not use in accordance with the Approved Plan before the Contractor uses another firm to perform the work.

c. The Contractor shall conform to the Plan unless the OBO Director grants a Post-Award Deviation Request. The OBO Director shall approve or reject a Deviation Request within 5 business days of receipt of the Deviation Request.

d. The OBO Director shall grant a Post-Award Deviation Request if

(1) for a reason beyond the Contractor's control, the Contractor is unable to use the certified MWSBE firm in the Plan to perform the specified work. In such cases, the Contractor shall use and document Good Faith Efforts to find a similarly qualified, certified MWSBE firm to perform such specified work; or

(2) the Contractor reasonably believes that, due to a change of scope, execution of the work in accordance with the directions from the Contracting Department is unlikely to meet the terms of the Plan. In such cases, the Contractor shall use and document Good Faith efforts to achieve a reasonable amount of MWSBE participation on the remaining work on the Contract.

(3) The OBO Director shall not unreasonably withhold approval of a Post-Award Deviation Request.

e. After the Date of Substantial Completion, the OBO Director shall evaluate the Contractor's Good Faith Efforts towards meeting the Plan, as it may amended.

f. If the Contractor fails to conform to the Plan and fails to submit a Post-Award Deviation Request or provide documents and associated information required by the Good Faith Efforts Policy or reasonably requested in writing by the OBO Director, the OBO Director may impose sanctions in accordance with Article VI of this Document 00808.

F. ELIGIBILITY OF MWSBE FIRMS FOR SUBCONTRACTING

1. To ensure that the City's Business Enterprise Program benefits only those firms that are owned and controlled by a minority person(s), a woman (women),a person(s) with a disability, or a small business enterprise, the Office of Business Opportunity will certify the eligibility of MWSBE and PDBE Contractors, Subcontractors, and Suppliers. Contact the Office of Business Opportunity Certification Section at 832-393-0600 for information regarding certification.

2. The Office of Business Opportunity maintains a Certified Minority, Women and Small Business Enterprises and Disabilities Business Enterprises Directory on the City's website. This Directory also lists federally-designated Disadvantaged Business Enterprises (DBEs).

NOTE: MWSBE firms, even if certified by another agency, may not qualify for Contract Goals unless certified by the Office of Business Opportunity prior to acceptance of the Participation Plan.

G. DETERMINATION OF MWSBE PARTICIPATION

MWSBE participation shall be counted toward meeting the Contract Goals in response to the following:

1. Once a firm is certified as a MWSBE firm, the total dollar value of the subcontract awarded to the MWSBE firm is counted toward the Contract Goals (See Sections III.G.4 and III.G.5 below). Safety and Participation goals do not count as a single goal concerning MWSBE/DBE requirements.

2. When the Contractor or Subcontractor is in a joint venture with one or more MWSBE firms, the OBO Director shall determine the percent of participation resulting from such joint venture to be counted toward the Contract Goals.

3. Contractor may count toward its Contract Goals only those MWSBE Subcontractors/ Suppliers performing a Commercially Usefully Function.

a. **COMMERCIALLY USEFUL FUNCTION** means a discrete task or group of tasks, the responsibility for performance of which shall be discharged by the MWSBE firm by using its own forces or by actively supervising on-site the execution of the tasks by another entity for whose work the MWSBE firm is responsible. In determining whether a certified firm is performing a commercially useful function, factors including but not limited to the following shall be considered: (1) whether the firm has the skill and expertise to perform the work for which it is being utilized and possesses all necessary licenses; (2) whether the firm is in the business of performing, managing, or supervising the work for which it has been certified and is being utilized; and (3) whether it is performing a real and actual service that is a distinct and

verifiable element of the work called for in a contract. Without limiting the generality of the foregoing, a MWSBE will not be considered to be performing a commercially useful function, if it subcontracts to non-MWSBE firms or to other MWSBE firms, more than 50 percent of a contract being counted toward the applicable Contract Goals, unless such subcontracting in excess of 50 percent has been expressly approved by the OBO Director in a Goal or Plan Deviation Request (Document 00472 or Document 00572) (either pre-bid or post award).

b. The OBO Director shall approve a Plan Deviation Request if the Contractor demonstrates that the industry standard for the type of work involved is to subcontract over 50 percent of the work.

4. A MWSBE firm cannot subcontract more than 50 percent of the work for which it is responsible to perform unless the OBO Director grants a Deviation Approval.

5. The Contractor may count 100 percent of MWSBE Manufacturer Supplier's participation and 60 percent of MWSBE Non-Manufacturer Supplier's participation toward its Contract Goals. Such MWSBE Supplier contracts shall not exceed 50 percent of contract's goals.

6. The OBO Policy and Procedures Manual, as amended, shall apply to the Contract for other determinations regarding counting MWSBE participation not explicitly provided for in the Contract.

H. CONTRACTOR COMPLIANCE

To ensure compliance with MWSBE requirements, the OBO Director and Contracting Department will monitor Contractor's efforts regarding MWSBE Subcontractors/Suppliers during the performance of this Contract. This may be accomplished through the following: job site visits, reviewing of records and reports, and interviews of randomly selected personnel.

I. RECORDS AND REPORTS

1. In accordance with II.A of this Document, the Contractor shall submit an initial report outlining MWSBE participation, 40 days after the Notice to Proceed date, and on or before the 15th day of each month thereafter until all MWSBE subcontracting or material supply activity is completed. Each report shall cover the preceding month's activity. The Contractor shall use the MWSBE Contract Compliance and Monitoring System (B2G Now) to meet this requirement.

2. Contractor shall maintain the following records for review upon request by the OBO Director or Contracting Department:

   a. Copies of executed Subcontractor agreements and purchase orders;
   b. Documentation of payments and other transactions with MWSBE Subcontractors/ Suppliers;
   c. Appropriate explanations of any changes or replacements of MWSBE Subcontractors/Suppliers;

NOTE: All replacement MWSBE Subcontractors/Suppliers must be certified by the Office of Business Opportunity.

   d. Any other records required by the OBO Director or Contracting Department.

3. If a Participation Plan Percentage is not being met, the monthly report shall include a narrative description of the progress being made in MWSBE participation. If sufficient MWSBE Subcontractors or Suppliers to meet the Participation Plan Percentage are being utilized, they should be identified by name and the dollar amount paid to date for work performed or materials furnished by each MWSBE during the monthly period. Reports are required when no activity has occurred in a monthly period.

4. Contractor shall retain all such records for a period of four years following completion of the Work and shall be available at reasonable times and places for inspection by authorized representatives of the City including the City Controller.

IV. SANCTIONS:

A. SUSPENSION PERIOD AND WAIVER

Pursuant to Section 15-86 of the Code of Ordinances, the OBO Director is authorized to suspend for a period of up to, but not to exceed, five years, any Contractor who has failed to make Good Faith Efforts.

B. GUIDELINES FOR IMPOSITION OF SANCTIONS

1. General:

a. The OBO Director shall not impose any sanction except upon evidence of specific conduct on the part of a MWSBE or Contractor that is inconsistent with or in direct contravention of specific applicable requirements for Good Faith Efforts.

b. Imposition and enforcement of suspensions shall be consistent with applicable state law.

2. Severity of Sanctions:

a. In determining the length of any suspension, the OBO Director shall consider the following factors:

(1) Whether the failure to comply with applicable requirements involved intentional conduct or, alternatively, may be reasonably concluded to have resulted from a misunderstanding on the part of the Contractor or MWSBE of the duties imposed on them by Article V of Chapter 15 of the Code of Ordinances and these procedures;

(2) The number of specific incidences of failure by Contractor or MWSBE to comply;

(3) Whether the Contractor or MWSBE has been previously suspended;

(4) Whether the Contractor or MWSBE has failed or refused to provide the OBO Director with any information requested by the Director or required to be submitted to the Director pursuant to law or these procedures;

(5) Whether the Contractor or MWSBE has materially misrepresented any applicable facts in any filing or communication to the OBO Director; and

(6) Whether any subsequent restructuring of the subject business or other action has been undertaken to cure the deficiencies in meeting applicable requirements.

b. Suspensions may be for any length of time not to exceed five years. Suspensions in excess of one year shall be reserved for cases involving intentional or fraudulent misrepresentation or concealment of material facts, multiple acts in contravention of applicable requirements, cases where the Contractor or MWSBE has been previously suspended, or other similarly egregious conduct.

C. DELEGATION

A decision to implement a suspension may be taken after notice and an opportunity for a hearing by an impartial person(s) designated by the OBO Director as the hearing officer.

The hearing officer(s) shall not have participated in the actions or investigations giving rise to the suspension hearing.

D. NOTICE

1. Prior to imposing any suspension, the OBO Director shall deliver written notice to the Contractor or MWSBE setting forth the grounds for the proposed suspension and setting a date, time, and place to appear before the hearing officer(s) for a hearing on the matter.

2. Any notice required or permitted to be given hereunder to any Contractor or MWSBE may be given either by personal delivery or by certified United States mail, postage prepaid, return receipt requested, addressed to their most recent address as specified in the records of the Office of Business Opportunity or in the Contract if no address is on file with the Office of Business Opportunity.

E. HEARING PROCEDURES

Proceedings before a hearing officer shall be conducted informally and in accordance with the OBO Policy and Procedures Manual, as amended, provided that each party may be represented by counsel and may present evidence and cross-examine witnesses. The City shall have the burden to prove by a preponderance of evidence that the Contractor's or MWSBE firm's actions constitute misconduct or failure to make Good Faith Efforts. The decision shall be reduced to writing and notice provided to the Contractor or MWSBE.

F. APPEALS

Appeals authorized pursuant to Section 15-86(b) of the Code of Ordinances shall be conducted by the OBO Director. Pursuant to Section 15-86(b), The contractor may appeal the OBO Director's decision in accordance with Section 15-23 of the Code of Ordinances and OBO Policy and Procedures.

ATTACHMENT A

City of Houston
Office of Business Opportunity
Good Faith Efforts Policy

General Policy.

Good Faith Efforts are steps taken to achieve an Contract Goal or other requirements which, by their scope, intensity and usefulness demonstrates the bidder's responsiveness to fulfill the business opportunity objective prior to the award of a contract, as well as the contractor's responsibility to put forth measures to meet or exceed the Contract Goal throughout the duration of the contract.

Good Faith Efforts are required to be made and demonstrated by an apparent successful bidder on goal oriented contracts or proposer on a regulated contract prior to award of a contract. Good Faith Efforts are required on professional services and construction contracts and on procurement of goods and non-professional service contracts with goals. If a bidder, when submitting a participation plan at the time of bid or proposal submission, anticipates it cannot or will not meet the Contract Goal prior to the award, the bidder must demonstrate to Office of Business Opportunity ("OBO") it has made Good Faith Efforts to meet the Contract Goal, to be eligible for the contract award.

Good Faith Efforts shall be evaluated on a case-by-case basis in making a determination whether a bidder or contractor is in compliance with this policy. The efforts employed by a bidder or contractor should be those that one could reasonably expect a bidder or contractor to take if the bidder were actively and aggressively attempting to obtain MWSBE participation sufficient to meet the Contract Goal. Efforts taken that are mere formalities or other perfunctory acts shall not be considered Good Faith Efforts to meet Contract Goals.

The factors provided herein are representative of the types of actions OBO will consider in determining whether the bidder or contractor made Good Faith Efforts to obtain MWSBE participation to meet the Contract Goal. The factors prescribed below are not intended to be a mandatory checklist, nor is it intended to be exhaustive or exclusive. OBO may consider other factors or types of efforts that may be relevant in appropriate cases.

If a contractor fails to submit Good Faith Efforts documentation as provided in this Policy, it waives the right to appeal OBO decisions related to this Policy. OBO will review all the efforts made by the contractor, including the quality and quantity of those efforts.

Pre–Award.

A bidder must submit a participation plan (Document 00470) to OBO at the time the bidder submits the bid. If the participation by certified MWSBE subcontractors documented on the participation plan ("participation") is less than the Contract Goal, a bidder should submit a Record of Good Faith Efforts (Document 00471) with the bid. A bidder should also submit a request for a deviation (Document 00472) if the bidder, having used Good Faith Efforts, reasonably believes that it cannot meet the Contract Goal or a commercially useful deviation.

In making a determination that the bidder has made a good faith effort to meet the Contract Goals, OBO shall consider specific documentation concerning the steps taken to obtain MWSBE participation, with a consideration of, by way of illustration and not limitation, whether the bidder demonstrated a genuine effort to comply with the following factors:

1. Attended any pre-bid or pre-proposal meetings scheduled by the City Department;

2. Followed up with MWSBEs that attended the pre-bid or pre-proposal meetings to discuss subcontracting and supplier opportunities and contacted MWSBEs listed in the City's online directory;

3. Conducted outreach with minority and women focused organizations and associations far in advance of solicitation due date (no less than 10 business days);

4. Identified and designated portions of the work to be performed by MWSBEs to increase the likelihood of meeting the Contract Goals (including where appropriate breaking down the contract into reasonably sized subcontracts to ensure participation);

5. Advertised subcontracting opportunities in news media focused towards minority and women persons far in advance of solicitation due date;

6. Provided MWSBEs with a point of contact that was knowledgeable about the project and possessed decision-making authority to answer questions from interested MWSBEs;

7. Provided a reasonable number of MWSBEs certified with timely written notices via email, mail, and/or fax and/or with documented contact regarding the subcontracting/supplier opportunities. A "reasonable number of MWSBEs" shall be based on the number of MWSBEs available in the directory;

8. Solicited the MWSBEs within a reasonable amount of time (no less than seven business days) before bid submission, as well as followed up with the MWSBEs solicited to determine if they were interested in submitting a bid or proposal or participating on a team.

9. Provided interested MWSBEs certified to perform the solicited work with prompt access to the plans, specifications, scope of work and requirements of the contract;

10. Negotiated in good faith with interested MWSBEs, and not rejecting MWSBEs as unqualified without sound reasons based on a thorough investigation of their capabilities;

11. Entered into a formal contract, or signing enforceable letters of intent with MWSBEs;

12. Provided an explanation to any MWSBE whose bid or price quotation is rejected, unless another MWSBE is accepted for the same work, as follows:
    a. Where price competitiveness is not the reason for rejection, a written rejection notice including the reason for rejection will be sent to the rejected MWSBE firm;
    b. Where price competitiveness is the reason for rejection, a meeting must be held with the price-rejected MWSBE, if requested, to discuss the rejection;

13. Made efforts to assist interested MWSBEs in obtaining bonding, lines of credit, insurance required for the contract, and documenting MWSBE denied by bona fide surety agents;

14. Ensured that the conditions and requirements for subcontracts are commensurate with industry standards and would not cause an economic hardship on MWSBEs, such as unnecessary insurance or coupling bid bonds with retainage;

15. Incorporated efforts not attempted earlier or on previous bids that appear more likely to lead to attaining the Contract Goal. Past performance on similar contracts with similar scopes will also be taken in consideration when determining Good Faith Efforts. A bidder that continues to make same efforts without any significant change in the level of participation may not be making Good Faith Efforts.

Post–Award.

The contractor must sign the approved participation plan (Document 00470 or Document 00570) prior to starting work on the Project. A contractor should submit a request for deviation (Document 00572) from OBO if the contractor, having made Good Faith Efforts, reasonably believes that it will not achieve the Participation Plan Percentage documented in the approved participation plan. Unless OBO approves a deviation, a contractor must submit to OBO a Participation Summary (Document 00660) prior to City Council's consideration of any close-out, term extension, or change order. If participation is less than anticipated in the approved participation plan, the contractor must submit a Record of Good Faith Efforts (Document 00571) along with the Participation Summary. A contractor that fails to submit a deviation request and Good Faith Efforts documentation waives the right to appeal OBO decisions related to this Policy.

If the contractor is awarded the contract and fails to achieve the established Participation Plan Percentage, the contractor must demonstrate to OBO its efforts to meet the Participation Plan Percentage and failure to do so based on circumstances that the contractor could not reasonably control. In determining whether the contractor made Good Faith Efforts to ensure full participation and achievement of the Participation Plan Percentage, OBO shall consider the following factors:

1. Whether the contractor designated an MWSBE liaison officer to administer the Contractor's MWSBE programs and to be responsible for maintenance of records of Good Faith Efforts.

2. Whether the contractor furnished prompt MWSBE Utilization Reports in a timely and accurate manner through the online Contract Monitoring System or via hard copy.

3. Whether the contractor responded to efforts to resolve disputes with MWSBEs, and genuinely attempted to resolve these issues.

4. Whether the contractor disclosed payment discrepancies timely and within the monthly reporting period;

5. Whether the contractor complied with the participation plan, unless the contractor received a deviation from the OBO Director and whether upon approval, the contractor made Good Faith Efforts to replace a removed MWSBE with another certified firm;

6. Whether the contractor furnished prompt written responses to written inquiries from the Director or any employee of OBO regarding the MWSBE's performance or information germane to the MWSBE's certification;

7. Whether the contractor ensured that at all times during the performance of any contract or subcontract the MWSBE firm is engaging in a commercially useful function as that term is defined in Chapter 15 of the City of Houston Code of Ordinances;

8. Whether the contractor provided the OBO information, or other material, that was factually accurate and free of material misrepresentation; and

9. Whether the contractor furnished prompt responses to requests for information, books and records needed to verify compliance from the department administering the Contract, the City Attorney and the City Controller;

10. Whether the contractor attended all meetings and mediation hearings as requested by the Director or his/her designee; and

11. How the contractor may be affected by change orders, with consideration given to the size of the change orders.

Change Orders.

The requirement to make Good Faith Efforts to achieve the approved Participation Plan Percentage is applicable to change orders. Contractors should make Good Faith Efforts to ensure that the Participation Plan Percentage remains substantially the same after the issuance of change orders. If a contractor cannot maintain substantially the same level of participation provided in the latest approved Participation Plan (Document 00470 or Document 00570) due to a change order, the contractor shall submit to the OBO Director and Contracting Department a Document 00571 (Post-Award Record of Good Faith Efforts) and Document 00572 (Post-Award Plan Deviation Request) in a timely manner that does not cause disruption to the project. In addition to other relevant factors, in evaluating whether Good Faith Efforts were made by the contractor to meet the Participation Plan Percentage despite change orders, the OBO Director shall consider the contractor's efforts to timely and efficiently deliver the project.

END OF DOCUMENT

Document 00820

WAGE SCALE AND PAYROLL REQUIREMENTS FOR ENGINEERING CONSTRUCTION

Wage Scale Requirements

1.1 Contractor and its Subcontractors must pay the general prevailing wage rates for building construction for each craft or type of worker or mechanic employed in the execution of any building construction or repair under the Contract in accordance with Chapter 2258 of the Texas Government Code and City of Houston, Texas Ordinance Nos. 85-2070, 2000-1114, 2001-152, 2006-91 and 2006-168, and 2009- 247 all as amended from time to time. City Council has determined the prevailing wage rate in the locality in which the work is being performed, which is set forth in Exhibit "A".

1.2 This prevailing wage rate does not prohibit the payment of more than the rates stated.

1.3 In bidding, Contractor warrants and represents that it has carefully examined the classifications for each craft or type of worker needed to execute the Contract and determined that such classifications in Exhibit "A" include all necessary categories to perform the work under the Contract.

1.4 The wage scale for engineering construction is to be applied to all site work greater than five feet from an exterior wall of new building under construction or from an exterior wall of an existing building.

1.5 If Contractor believes that an additional classification for a particular craft or type of worker is necessary to perform work under the Contract, it must submit with its bid a request to the Contract Compliance Division of the Office Of Business Opportunity ("OBO") to use an additional labor classification not listed in Exhibit "A" and specify the proposed new classification. OBO shall determine whether a proposed classification is already covered in Exhibit "A", and, if it is, specify which classification is appropriate. OBO's decision is conclusive. If OBO decides that a new classification is necessary, it will determine the appropriate prevailing wage rate for any resurveyed, amended, new, or additional craft or type of worker not covered by Exhibit "A". Such determination must be decided in accordance with procedures established by OBO, and in compliance with Chapter 2258 of the Texas Government Code and City of Houston, Texas Ordinance Nos. 85-2070, 2000-1114, 2001-152, 2006-91, 2006-168 and 2009-247 subject to City Council approval.

1.6 Contractor must not use any labor classification not covered by Exhibit "A" until such classification is established and approved for use by OBO.

1.7 A Contractor or Subcontractor who violates Chapter 2258 of the Texas Government Code must pay to the City, $60 per each worker employed for each calendar day or part of the day that the worker is paid less than the wage rates set forth in Exhibit "A".

1.8 The City may withhold money required to be withheld under Chapter 2258 of the Texas Government Code from the final payment to Contractor or earlier payments if City Council makes a determination that there is good cause to believe that Contractor has not complied with these provisions and Chapter 2258 of the Government Code, in which case the City may withhold the money at any time subsequent to the finding by City Council.

1.9 Contractor and Subcontractors must keep records specifying:

(1) the name and classification of each worker employed under the Contract; and

(2) the actual per diem wages paid to each worker, and the applicable hourly rate.

The records must be open at all reasonable hours for inspection by the officers and agents of the City.

1.10 The hourly cost of salary for non-exempt workers for labor in excess of 40 hours per worker per week, shall be calculated at 1.5 times the worker's base pay, plus 1.0 times fringe benefits, for the applicable craft and level.

Certified Payroll Requirements

2.1 Employees are paid weekly and payrolls are submitted weekly using the City of Houston's electronic payroll submission module, unless the prime Contractor has been instructed to do otherwise by the Office of Business Opportunity. When no work is done after a Contractor has started work, the Contractor is required to submit a weekly compliance statement indicating no work was performed. The payrolls must reflect the exact work and classification of the workers, the exact amount that they were paid. Workers must be paid the contracted amount (prevailing wage rates). The Contractor will be penalized $60.00 a day for each employee who is underpaid per Texas Government Code §2258-023 for all contracts.

2.2 Payrolls must be submitted electronically & indicate whether the worker worked inside or outside the building area when both wage rates are applicable to the contract.

2.3 Payrolls must be submitted each week until all work by the contractor is complete and the electronic payroll submission is marked as final in the system.

2.4 Payrolls must cover a seven day period from the start of the work week and must be consecutive seven day periods until all work is complete.

2.5 Payrolls must have employees' names, addresses, last four digits of the social security numbers, and job classifications. The job classifications must be the same as the classifications on the prevailing wage rate schedule.

2.6 A payroll deduction authorization form must be submitted for each employee for any deductions other than Federal and FICA taxes.

2.7 Employees must be paid overtime (time and a half) for all hours worked over 40 hours a week on both federally and City-funded contracts.

2.8 The Contractor has the responsibility to comply with all Internal Revenue Service rules and regulations. Contractors who submit certified payrolls with **Owner Operators (truckers)** must submit a signed tax liability statement from Owner Operator acknowledging their responsibility for Federal Income Tax and FICA reporting obligations.

2.9 If the Contractor wants to use the apprentice wage rates for an employee, the apprenticeship certificates must be submitted to the Office of Business Opportunity in advance of the employee working on the project and appearing on the payroll. You must comply with the listed number of journeymen to apprentices as listed.

2.10 A poster of the Prevailing Wage Rate Schedule should be clearly displayed on each job site from the time the project starts until the work is completed, or in case of annual service agreements, in the Contractor's office.

2.11 The Contractor shall submit the "Certificate from Contractor Appointing Officer or Employee to Supervise Payment of Employees" (Exhibit "B") to the Monitoring Authority listed in Document 00495 prior to final execution of the contract.

2.12 During the course of the work, ALL Subcontractors shall submit the "Certificate from Subcontractor Appointing Officer or Employee to Supervise Payment of Employees" (Exhibit "C") to the Monitoring Authority listed in Document 00495.

2.13 Upon completion of the Project, as part of the contract-awarding department's total clearance process, the Office of Business Opportunity's Contract Compliance Section must review whether the Wage Rate and Payroll Requirements were met and report the results to the department.

REST OF PAGE INTENTIONALLY LEFT BLANK

EXHIBIT "A"

LABOR CLASSIFICATIONS AND PREVAILING WAGE RATES FOR
ENGINEERING CONSTRUCTION 2015

CLASSIFICATION	RATE	CLASSIFICATION	RATE
Asphalt Distributor Operator	$14.06	Milling Machine Operator - Fine Grade	$13.53
Asphalt Paving Machine Operator	$14.32	Mixer Operator	$10.33
Asphalt Raker	$12.36	Motor Grader Operator- Rough	$14.23
Asphalt. Shoveler	$11.68	Motor Grader Operator	$15.69
Broom or Sweeper Operator	$12.68	Oiler	$12.12
Bulldozer Operator	$11.81	Painter-Structures	$18.62
Carpenter- Rough	$12.49	Pavement Marking Machine Operator	$11.18
Concrete Finisher- Paving	$12.98	Pile Driverman	$14.95
Concrete Finisher- Structures	$12.98	Pipe Layer	$12.12
Concrete Paving Curbing Machine Operator	$11.71	Reinforcing Steel Setter - Paving	$15.15
Concrete Paving Finishing Machine Operator	$13.07	Reinforcing Steel Setter - Structure	$14.39
Concrete Paving Joint Sealer Operator	$11.00	Roller Operator, Pneumatic - Self-propelled	$11.57
Concrete Paving. Saw Operator	$13.99	Roller Operator, Steel Wheel, Flat Wheel/Tamping	$11.57
Concrete Paving Spreader Operator.	$10.44	Roller Operator, Steel Wheel, Plant Mix Pavement	$11.92
Concrete Rubber . . .	$9.00	Scraper Operator	$13.47
Crane Clamshell Backhoe Derrick, Dragline, Shovel Operator	$12.71	Servicer	$13.97
Crusher and Screening Plant Operator	$11.29	Sign Installer - PGM	$8.54
Electrician * 3 Journeyman 2 Apprentice Allowed	$27.11	Slip Form Machine Operator	$11.07
Flagger	$10.33	Spreader Box Operator	$13.58
Form Builder/Setter- Structures	$12.23	Structural Steel Worker	$14.39
Form Liner- Paving and Curb	$12.34	Tractor Operator - Crawler Type	$13.68
Form Setter- Paving and Curb	$12.34	Tractor Operator- Pneumatic	$10.07
Foundation Drill Operator - Crawler Mounted	$17.43	Transit Mixer Truck Driver	$11.00
Foundation Drill Operator - Truck Mounted	$15.89	Truck Driver, Lowboy-float	$16.03
Front Loader Operator	$13.17	Truck Driver, Single-Axle - Heavy	$11.46
Laborer Common	$11.02	Truck Driver, Single-Axle - Light	$11.48
Laborer- Utility	$11.73	Truck Driver, Tandem Axle Semi-Trailer	$12.27
Manhole Builder	$9.00	Work Zone Barricade Servicer	$11.67
Mechanic	$16.96	eceive rate prescribed for craft performing operation to which welding is incidental	
* Apprentices- must be in an approved USDOL Program and cannot exceed ratios			

Engineering Prevailing Wages Classification Definitions

Asphalt Distributor Operator
Drives distributor truck, sets spray bars and operates valves and levers to control distribution of bituminous material for highway surfacing. May oil, grease or otherwise service and make adjustments to equipment as needed. Performs other related duties.

Asphalt Paving Machine Operator
Operates paving machine that spreads and levels asphaltic concrete on highway subgrade. Controls movement of machine, raises and lowers screed, regulates width of screed. May, oil, grease, service and make adjustments to equipment as needed. Performs other related duties.

Asphalt Raker
Distributes asphaltic materials evenly over road surface by raking and brushing material to correct thickness; directs Laborers when to add or take away material to fill low spots or to reduce high spots. Performs other related duties.

Asphalt Shoveler
A general term used on construction work covering many unskilled classifications requiring work of a physical nature. A laborer works with all crews doing everything from pick and shovel work to cleaning up lumber with hammer, shoveling and placing concrete, uses air tools, cleans concrete joints and fills joints with sealing compound from bucket or with hose and nozzle from a central source, applies coating of oil to inside face of forms, may help set and strip forms, unloads and transports reinforcing steel, cures newly poured concrete, helps lower pipe into ditch for pipelayers, builds fences, works with dirt crew keeping construction layout stakes out of the way of dirt moving equipment.

Broom or Sweeper Operator
Operates a self-propelled machine to sweep and clean roadway surfaces. May oil grease, service and make adjustments to equipment as needed. Performs other related duties.

Bulldozer Operator
Operates a crawler tractor with a bulldozer mounted in front of chassis to level, distribute and push earth or other material. May operate a ripper attachment to break up rock or other hard material. May use a push block on front of tractor to push load scrapers. May oil, grease, or otherwise service and make minor repairs to equipment as needed. Performs other related duties.

Carpenter, Rough
Works from plans to build, assemble, fit together, align, plum, and set in place forms for molding concrete structures. Forms may be wood, steel, aluminum, fiberglass or any other type of material. Checks form while concrete is placed. May install miscellaneous materials integral to concrete structures. May set precast concrete elements. Prepares for slipforming traffic rail and median barrier. May install permanent metal deck forms. May work with power tools Performs other related duties.

Concrete Finisher, Paving
Finishes the exposed surfaces of fresh concrete paving, median barrier and every element of concrete structures to the final grade and contour structures to the final grade and contour with the use of straight edges and steel trowels. Operates bridge deck finishing machine. Finishes concrete curbs and gutters. Finishes exposed surface of concrete after forms have been removed by patching imperfections with fresh concrete, rubbing surface with abrasive stone, and directing others in removing excess or defective concrete with power tools. Performs other related duties.

Concrete Finisher, Structures
A worker semi-skilled in concrete finishing who assists Concrete finisher by performing specific or general duties of lesser skill and keeping Concrete Finisher supplied with materials, tools, and supplies; cleaning working area an equipment; and holding materials and tools. Performs other related duties.

Concrete Paving Curbing Machine Operator
Operates self - propelled machine(s) which may or may not travel on concrete paving forms, spreading and leveling fresh concrete to grade by use of augers and screeds. May oil, grease or otherwise service and make adjustments to equipment as necessary. Performs other related duties.

Concrete Paving Finishing Machine Operator
Operates self - propelled machine(s) which may or may not travel on concrete paving forms, spreading and leveling fresh

concrete to grade by use of augers and screeds. May oil, grease or otherwise service and make adjustments to equipment as necessary. Performs other related duties.

Concrete Paving Joint Sealer Operator
Cleans and seals joints requiring a hot or cold sealing compound in concrete paving, sidewalks, driveway and approach slabs. May oil, grease or make necessary repairs adjustments to equipment as needed. Performs other related duties.

Concrete Paving Saw Operator
Operates a water-cooled power saw with either or an abrasive blade to saw expansion and contraction joints in concrete paving. May also be used to saw asphaltic pavements. May oil grease or otherwise service and make necessary adjustments to equipment as needed. Performs other related duties.

Concrete Paving Spreader Operator
Operates self - propelled machine(s) which may or may not travel on concrete paving forms, spreading and leveling fresh concrete to grade by use of augers and screeds. May oil, grease or otherwise service and make adjustments to equipment as necessary. Performs other related duties.

Concrete Rubber
Finishes the exposed surface of concrete masonry after the forms have been removed by patching holes and broken corners with fresh concrete, rubbing surface with abrasive stone to remove rough spots, and removing high spots and defective concrete with hand chisel and hammer or pneumatic chisel and powered abrasive stone. Performs other related duties.

Crane, Clamshell, Backhoe, Derrick, Dragline, Shovel Operator
A worker who operates a lattice boom type crane can hoist and move materials, raise and lower heavy weights and perform other related operations. May be crawler type or rubber tired. May include placement of rock riprap, clamshell, dragline, pipe and pile driving operations. May oil, grease or otherwise service and make necessary adjustments to equipment as needed. Performs other related duties.

Crusher and Screed Plant Operator
Operates a crusher or screening plant through which rock is run to break it into crushed stone for construction or to control flow of materials not needed. May include minor repairs and may service and make necessary adjustments to equipment as needed. Performs other related duties.

Electrician *3 Journeyman 2 Apprentice
Plans and directs the layout of metal electrical conduit, installs wiring systems, switch-panels, buss bars, works on overhead distribution systems and underground distribution systems. Performs other related duties.

Flagger
A worker who directs traffic in or around a construction site. May use signs or devices to direct traffic. May help assemble, position and clean devices or equipment used to direct traffic. Must be able to effectively communicate with the public. May require certain level of training by TXDOT specifications. Performs other related duties.

Form Builder/Setter, Structures
Fits together, aligns and sets to grade metal and wooden forms for placement of concrete. Forms may be wood, steel, aluminum, fiberglass or any other type of material. Checks forms while concrete is placed. May install miscellaneous materials integral to concrete structures. May set precast concrete elements. Prepares for slipforming traffic rail and median barrier. May install permanent metal deck forms. May work with power tools. Performs other related duties.

Form Liner, Paving & Curb
Fits together, panels align and sets to grade metal and wooden forms for placement of concrete. Works with survey crew to set stringline for panels or moles. Performs other related duties.

Form Setter, Paving & Curb
Fits together, align and set to grade metal and wooden forms for placement of concrete paving and curbs. Works with survey crew to set stringline for paving, curb and gutter curb. Performs other related duties.

Foundation Drill Operator, Crawler Mounted
Operates a hole-drilling machine that is crawler mounted. May include geotechnical operations such as soils nails, rock nails, tiebacks, anchors and jet grouting. May oil, grease or otherwise service and make necessary adjustments to equipment as needed. Performs other related duties.

Foundation Drill Operator, Truck Mounted
Operates a hole drilling machine that is mounted on the rear of a rubber tired vehicle or truck. May include soils nails, rock nails, tiebacks, anchors and jet grouting. Drive truck from location to location or may have laborer who drives truck. May oil, grease or otherwise service and make necessary adjustments to equipment as needed. Performs other related duties.

Front End Loader Operator
Operates a rubber tired, skid steer or crawler type tractor with an attached scoop type bucket on front end. Machine is used to load materials from stockpiles, excavation, charging batch plants, loading and unloading trucks. May be used with attachments in lieu of the bucket. May oil, grease or otherwise service and make necessary adjustments to equipment as needed. Performs other related duties.

Laborer, Common
A general term used on construction work covering many unskilled classifications requiring work of a physical nature. A laborer works with all crews doing everything from pick and shovel work to cleaning up lumber with hammer, shoveling and placing concrete, uses air tools, cleans concrete joints and fills joints with sealing compound from bucket or with hose and nozzle from a central source, applies coating of oil to inside face of forms, may help set and strip forms, unloads and transports reinforcing steel, cures newly poured concrete, helps lower pipe into ditch for pipelayers, builds fences, works with dirt crew keeping construction layout stakes out of the way of dirt moving equipment.

Laborer, Utility
Performs a variety of manual duties, usually working in a utility capacity by working on multiple projects and tasks where demands require workmen with varied experience and ability to work without close direction. Unloads and transports reinforcing steel. May occasionally place and tie reinforcing steel. Directs common laborers in pouring concrete. Erects shoring and bracing. Assists in installation of pipe. Installs, operate and maintains dewatering systems. May assist equipment operators in positioning machines, verifying grades and signaling operators. Directs truck drivers and scraper operators to dumping positions to maintain grades as directed. Uses power tools and air tools. May work as lead man in a labor crew. His performance of a wide variety of construction jobs distinguishes him from a helper assigned to a specific craft. Installs and maintains erosion control. Is more or less a general utility construction worker. May be second step in learning a skill, and may later become a helper in a specific classification. Performs other related duties.

Manhole Builder
Constructs a means of permanent access to water and sewer lines for maintenance purposes. This work consists of laying brick or concrete slab at bottom of ditch up to an approximate grade line near the surface of the ground. Brick or block is normally laid to form a nearly circular manhole. Brick or block is laid in by eyesight and is normally to a plumb line. Chipped or culled brick can be used quite often is. No effort may be made to keep mortar off the face of the brick and joints are not pointed. May apply coating of concrete to interior and exterior surface. Performs other related duties.

Mechanic
Assembles, set up, adjusts and maintains and repairs all types of construction equipment and trucks. He may perform the duties of a welder in repair of equipment. Performs other related duties.

Milling Machine Operator, Fine Grade
Operates a power-driven milling machine that planes material of the to roadbed and discharges the material into a hauling unit or a windrow. May oil, grease or otherwise service and make necessary adjustments to equipment as needed. Performs other related duties.

Mixer Operator
Performs a variety of manual duties, usually working in a utility capacity by working on multiple projects and tasks where demands require workmen with varied experience and ability to work without close direction. Unloads and transports reinforcing steel. May occasionally place and tie reinforcing steel. Directs common laborers in pouring concrete. Erects shoring and bracing. Assists in installation of pipe. Installs, operate and maintains dewatering systems. May assist equipment operators in positioning machines, verifying grades and signaling operators. Directs truck drivers and scraper operators to dumping positions to maintain grades as directed. Uses power tools and air tools. May work as lead man in a labor crew. His performance of a wide variety of construction jobs distinguishes him from a helper assigned to a specific craft. Installs and maintains erosion control. Is more or less a general utility construction worker. May be second step in learning a skill, and may later become a helper in a specific classification. Performs other related duties.

Motor Grader Operator, Rough
Operates a motor grader. Equipment is used to grade excavation and embankment and to lay asphalt, base and other materials. May blade haul roads and do other general motor grader work, but does not perform finish grade work to close

specification tolerances. This operator may be a learner in the first phase of learning the skills of motor grader work. May oil, grease or otherwise service and make necessary adjustments to equipment as needed. Performs other related duties.

Motor Grader Operator
Operates a motor grader. Equipment is used to grade excavation and embankment and to lay asphalt, base and other materials. May blade haul roads and do other general motor grader work, but does not perform finish grade work to close specification tolerances. This operator may be a learner in the first phase of learning the skills of motor grader work. May oil, grease or otherwise service and make necessary adjustments to equipment as needed. Performs other related duties.

Oiler
A learner or semi-skilled worker who under the direction of the watch engineer. May oil and grease or otherwise service all engines and necessary equipment as needed. He may clean and paint engine room as needed. Performs other related duties.

Painter, Structures
Paints and stains structural steel and concrete surfaces of bridges, retaining walls, or other structures. Directs cleaning and abrasive blasting of surfaces prior to painting or staining. Performs other related duties.

Pavement Marking Machine Operator
Operates machine used in laying paint stripes or markers on all types of paving. Loads machine with appropriate materials and may walk or ride on machine. May oil, grease or otherwise service and make necessary adjustments to equipment as needed. Performs other related duties.

Piledriverman
Sets in place, aligns, plumbs directs driving of timber, concrete, steel, pipe and any other type of piling. Sets, drives and pulls steel, concrete and other types of sheet piling. Rigs pile and leads and bracing. Signals operator. Splices piles before and after driving. Directs pile cutoff. May direct jetting or drilling equipment in connection with installing piles to grade. Performs other related duties.

Pipelayer
Installs concrete, clay, steel, ductile iron, plastic, corrugated pipe and any other type of pipe for storm drainage, water lines, gas lines and sanitary sewer lines. Lays underground communication and electrical ducts. May install and set electrical ground boxes, hand holes, manholes, inlets and other structures. Caulks joints, makes threaded and flanged connections. Installs valves and other accessories. Performs other related duties.

Reinforcing Steel Setter, Paving
Works from plans to lay out and install reinforcing steel within forms or in mats of concrete paving. May direct unloading of material. Determines rigging required to complete work. Gives direction to reinforcing steel worker (helper) or common or utility laborers. May install miscellaneous materials integral to concrete structure or paving. May work with power tools. Performs other related duties.

Reinforcing Steel Setter, Structure
Works from plans to lay out and install reinforcing steel within forms or in mats of concrete paving. May direct unloading of material. Determines rigging required to complete work. Gives direction to reinforcing steel worker (helper) or common or utility laborers. May install miscellaneous materials integral to concrete structure or paving. May work with power tools. Performs other related duties.

Roller Operator, Pneumatic, Self-Propelled
Operates a self-propelled machine with either steel wheels pneumatic tires, which is used to compact and smooth all bituminous materials. May oil, grease or otherwise service and make necessary adjustments to equipment as needed. Performs other related duties.

Roller Operator, Steel Wheel, Flat Wheel/Tamping
Operates a self-propelled machine with either steel wheels or pneumatic tires which is used to compact earth fills, subgrade, flexible base and all other types of materials except bituminous. May oil, grease or otherwise service and make necessary adjustments to equipment as needed. Performs other related duties.

Roller Operator, Steel Wheel, Plant Mix Pavement
Operates a self-propelled machine with either steel wheels pneumatic tires, which is used to compact and smooth all bituminous materials. May oil, grease or otherwise service and make necessary adjustments to equipment as needed. Performs other related duties.

Scraper Operator
Operates a self-contained wheeled tractor scraper both self loading or assisted by crawler tractors or other scrapers. Used to excavate and transport earth or other materials. May oil, grease or otherwise service and make necessary adjustments to equipment as needed. Performs other related duties.

Servicer
Drives a truck, which carries various fuels, oils, greases and filters. Must have knowledge of and is responsible for the correct oiling and greasing and changing of filters on equipment according to the manufacturers' specifications. Uses compressed air grease guns, wrenches and other tools. May make adjustments to clutches, brakes and other mechanical items. Keeps record of service preventive maintenance records. May have laborer assisting him. May require CDL if driving truck on public highways. Performs other related duties.

Sign Installer (PGM)
Sets forms, reinforcing steel, anchor bolts and pours concrete for Sign foundations. Fabricates and erects pipe and angle Frameworks by bolting, welding or other means prior to installation of signs that are normally prefabricated. Works from plans in location and drilling holes for proper location and alignment of signs. May direct hoisting of signs into place. Fastens signs to framework by bolting and other means. Locates and sets lighting brackets. May perform other work associated with signing projects. Supervises sign erector helper. Performs other related duties.

Slip Form Machine Operator
Cleans and seals joints requiring a hot or cold sealing compound in concrete paving, sidewalks, driveway and approach slabs. May oil, grease or make necessary repairs adjustments to equipment as needed. Performs other related duties.

Spreader Box operator
Operates spreader box by adjusting hopper and strike off blade so that the gravel, stone or other material may be spread to a specific depth on road surface during seal coat and surface treatment operations. May oil, grease or otherwise service and make necessary adjustments to equipment as needed. Performs other related duties.

Structural Steel Worker
Works from plans to lay out and install reinforcing steel within forms or in mats of concrete paving. May direct unloading of material. Determines rigging required to complete work. Gives direction to reinforcing steel worker (helper) or common or utility laborers. May install miscellaneous materials integral to concrete structure or paving. May work with power tools. Performs other related duties.

Tractor operator, Crawler Type
Operates a crawler tractor with a bulldozer mounted in front of chassis to level, distribute and push earth or other material. May operate a ripper attachment to break up rock or other hard material. May use a push block on front of tractor to push load scrapers. May oil, grease, or otherwise service and make minor repairs to equipment as needed. Performs other related duties.

Tractor Operator, Pneumatic
Operates a gasoline or diesel powered agricultural tractor that tows compaction rollers, plow, disc. water tanks, scrapers and other similar operations. May use other miscellaneous attachments. May oil, grease or otherwise service and make necessary adjustments to equipment as needed. Performs other related duties.

Traveling Mixer Operator
Drives a gasoline or diesel truck upon which is mounted a concrete mixer. Operates concrete mixer and dumps concrete on the grade, into forms or into concrete pumps or buckets. Cleans mixer drum. May require CDL license for on highway use. May service and make necessary adjustments for proper operation of equipment. Performs other related duties.

Truck driver, lowboy-Float
Drives a heavy-duty diesel powered truck to which is attached a trailer upon which heavy equipment is hauled. Driver is often required to operate heavy equipment to load or unload the lowboy. May require CDL license for on highway use. May service and make necessary adjustments for proper operation of equipment. Performs other related duties.

Truck driver, Single Axle, Heavy
Drive a light capacity truck for transporting loads of construction material. The truck is of single rear axle type, may have various kinds of beds attached, such as dump, flat bed, tank, etc. May require CDL license for driving on highway. May services and make necessary adjustments for proper operation equipment. Performs other related duties.

Truck driver, Single Axle-Light
Drive a light capacity truck for transporting loads of construction material. The truck is of single rear axle type, may have

various kinds of beds attached, such as dump, flat bed, tank, etc. May require CDL license for driving on highway. May services and make necessary adjustments for proper operation equipment. Performs other related duties.

Truck Driver, Tandem Axle, Semi-Trailer
Drives a diesel-powered tractor pulling a semi trailer hauling materials. Hauls dirt, rock, aggregates or other material. May require CDL license for driving on highway. May service and make necessary adjustments for proper operation of equipment. Performs other related duties.

Work Zone Barricade Servicer
Fabricates, erects and maintains temporary traffic control devices, including arrow boards, signs, barricades, channelizing devices, barrels and all message boards. May operates a truck during traffic control operations.

WELDERS - Receives rate for craft being performed to which welding is incidental.

EXHIBIT "B"

CERTIFICATE FROM CONTRACTOR APPOINTING OFFICER OR EMPLOYEE TO SUPERVISE PAYMENT OF EMPLOYEES

Project Name _____

_____

Project WBS#:_____Date_____

(I) (We) hereby certify that (I am) (we are) the **Prime Contractor** for _____

_____
(specify type of job)

in connection with construction of the above-mentioned Project, and that (I) (we) have appointed_____, whose signature appears below, to supervise the payment of (my) (our) employees beginning_____, 20___; that he/she is in a position to have full knowledge of the facts set forth in the payroll documents and in the statement of compliance required by the Copeland Act and the City of Houston, which he/she is to execute with (my) (our) full authority and approval until such time as (I) (we) submit to the City of Houston a new certificate appointing some other person for the purposes hereinabove stated.

_____ Phone:_____
(Identifying Signature of Appointee)

Attest: _____
(Name of Firm or Corporation)

By:_____ By:_____
(Signature) (Signature)

_____ _____
(Title) (Title)

NOTE: This certificate must be executed by an authorized officer of a corporation or by a member of a partnership, and shall be executed prior to and be submitted with the first payroll. Should the appointee be changed, a new certificate must accompany the first payroll for which the new appointee executes a statement of compliance required by the Copeland Act and the City of Houston.

EXHIBIT "C"

CERTIFICATE FROM SUBCONTRACTOR APPOINTING OFFICER OR EMPLOYEE TO SUPERVISE PAYMENT OF EMPLOYEES

Project Name _____

_____

Project WBS#:_____Date_____

(I) (We) hereby certify that (I am) (we are) the **Sub Contractor** for _____

_____
(specify type of job)

in connection with construction of the above-mentioned Project, and that (I) (we) have appointed_____, whose signature appears below, to supervise the payment of (my) (our) employees beginning_____, 20___; that he/she is in a position to have full knowledge of the facts set forth in the payroll documents and in the statement of compliance required by the Copeland Act and the City of Houston, which he/she is to execute with (my) (our) full authority and approval until such time as (I) (we) submit to the City of Houston a new certificate appointing some other person for the purposes hereinabove stated.

_____ Phone:_____
(Identifying Signature of Appointee)

Attest: _____
(Name of Firm or Corporation)

By:_____ By:_____
(Signature) (Signature)

_____ _____
(Title) (Title)

NOTE: This certificate must be executed by an authorized officer of a corporation or by a member of a partnership, and shall be executed prior to and be submitted with the first payroll. Should the appointee be changed, a new certificate must accompany the first payroll for which the new appointee executes a statement of compliance required by the Copeland Act and the City of Houston.

END OF DOCUMENT

Document 00830

TRENCH SAFETY GEOTECHNICAL INFORMATION

1.0 DOCUMENT INCLUDES

A. Trench Safety Geotechnical Information: Geotechnical information obtained for use in design of the trench safety system is included as an attachment to this document.

2.0 RELATED DOCUMENTS

A. Section 02260 - Trench Safety Systems.

END OF DOCUMENT

HVJ ASSOCIATES

Houston
Austin
Dallas
San Antonio

6120 S. Dairy Ashford Rd.
Houston, TX 77072-1010
281.933.7388 Ph
281.933.7293 Fax
www.hvj.com

March 16, 2015

Mr. Ralph Cox, PE
Vice President
Klotz Associates
1160 Dairy Ashford, Suite 500
Houston, Texas 77079

Re: Trench Safety Letter
Rampart Street Drainage Improvements
WBS No. M-000265-0001-3
Owner: City of Houston
HVJ Report No. HG1110720

Dear Mr. Cox:

The project involves storm sewer improvements along several streets in Houston, Texas. The improvements will take place along Pine from Renwick West to approximately 500 feet east of Hillcroft, along Valerie and Flack from Rampart West to approximately 500 feet east of Hillcroft, along Rampart from Flack North to Clarewood, along Clarewood from Rampart East to Mullins, and along Mullins from Clarewood North to High Star in Houston, Texas. We understand that the invert depth of the proposed storm sewers will range between 5 and 20.5 feet below the existing grade.

Trench Excavation Considerations. Excavations should satisfy two requirements. First, the soils above final grade must be removed without disturbing the soil below excavation grade, which will support constructed facilities. Second, the sides of the excavation must be stable to prevent damage to adjacent streets and facilities as a result of either vertical or lateral movements of the soil. In addition, a satisfactory excavation procedure must include an adequate construction dewatering system to lower and maintain the water level at least a few feet below the lowest excavation grade.

Excavation Stability. Excavations shall be shored, laid back to a stable slope or some other equivalent means may be used to provide safety for workers and adjacent structures. Assessment of the need for excavation sloping, use of trench boxes or other measures required to provide a stable excavation, and the use of appropriate construction practices and/or equipment is the contractor's responsibility. The following comments are intended to represent common solutions to stability problems encountered in similar soil conditions in the Houston area, and may not be construed as excavation system design recommendations. The excavation operations shall be performed in accordance with 29 CFR Part 1926 subpart P, as amended, including rules published in the Federal Register, Vol. 54, No. 209, dated October 31, 1989, as a minimum. In addition, the provisions of legislation enacted by the Texas Legislature and City of Houston should be satisfied.

Excavations Shallower Than Five Feet. Trenches that are less than five feet deep should be appropriately protected when any indication of hazardous ground movement is anticipated. Based on the soil conditions revealed by the borings, all trenches shallower than five feet may be excavated with side slopes of one vertical to one and one-half horizontal. If there are any indications of sloughing during excavation, the side slopes should be flattened.

Excavations Deeper Than Five Feet. Trenches that are deeper than five feet should be shored, laid back to a stable slope, or some other appropriate means of protection should be provided where workers might be exposed to moving ground or caving. The slopes may be constructed in accordance with Table B-1 and shoring may be constructed in accordance with Table C-1.1, Table C-1.2 and Table C-1.3 of 29 CFR Part 1926. Soil types required by Table C-1.1, Table C-1.2 and Table C-1.3 (Trench Shoring - Minimum Timber Requirements) are given below:

Boring No.	Street Name	OSHA Soil Type				
		Depth of Trench (feet)				
		0-10	10-14	14 – 21	21-25	25-32
B-1	Mullins Street	B	B	B	-	-
B-2	Mullins Street	B	B	B	-	-
B-3	Clarewood Street	B	B	C	C	-
B-4	Rampart Street	B	B	B	B	-
B-5	Rampart Street	B	B	B	B	-
B-6	Rampart Street	B	B	C	C	C
B-7	Rampart Street	B	B	B	B	-
B-8	Rampart Street	B	C	C	C	C
B-9	Rampart Street	B	B	C	C	C
B-10	Rampart Street	B	B	C	C	C
B-11	Rampart Street	B	B	C	C	C
B-12	Rampart Street	B	B	B	B	C
B-13	Pinemont Street	B	C	C	C	C
B-14	Pinemont Street	B	B	B	C	C
B-15	Pinemont Street	B	B	B	-	-
B-16	Flack Drive	B	B	B	-	-
B-17	Valerie Street	B	B	B	-	-
B-18	Pine Street	B	B	B	-	-
B-19	Pine Street	B	B	B	C	C
B-20	Pine Street	B	B	B	C	C

Please call us if you have any questions or need more information.

Sincerely,

HVJ ASSOCIATES, INC.
Texas Firm Registration No. F-000646

SVedantam

Sharmi Vedantam, P.E.
Project Manager

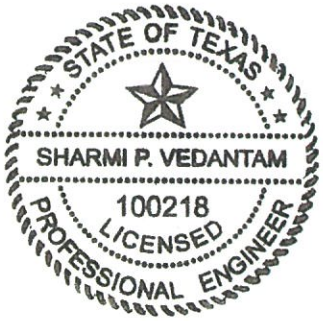

Date: 3/16/2015

SV

City of Houston
Pay or Play Program Requirements

I. Pay or Play Program Overview

A. Purpose

The Pay or Play Program was established with Ordinance 2007-534 on July 1, 2007 and is governed by Executive Order 1-7. The Pay or Play Program (POP Program) creates a more level playing field and enhances fairness in the bid process between competing contractors that choose to offer health benefits to their workforce and those who do not. The program also recognizes and accounts for the fact that there are cost associated with health care of the uninsured citizens of the Houston and Harris County area.

B. Program Elements

1. Covered contracts:

I.) Advertised after July 1, 2007 or which is executed on or after the effective date of this Executive Order.
II.) Contracts valued at or above $100,000.00 (contract) and $200,000.00 (sub-contract) including contingencies, amendments, supplemental terms and/or change orders.
III.) Professional Service, Construction, and Service type contracts.

2. Contracts not covered:

I.) Any contract in which the primary purpose is procurement of property, goods, supplies, and or equipment.
II.) An inter-governmental contract, inter-governmental agreement or purchasing cooperative.

3. Covered employees: This program applies to employees of a covered contractor or subcontractor, including contract labor, who are over age 18, work at least 30 hours per week and work any amount of time under a covered city contract or subcontract.

4. Pay or Play Option:

I.) "Pays" by contributing $1.00 per covered employee per regular hour for work performed under the contract with the City; or
II.) "Plays" by providing health benefits to covered employees. Health benefits must meet or exceed the following standards:

- The **employer will contribute no less than $150 per covered employee per month** toward the total premium cost.
- The **employee contribution, if any amount, will be no greater than 50% of the monthly premium cost and no more than $150 per month.**

Note: (1)A contractor is deemed to have complied with section 5.4 of E.O. 1-7 with respect to a covered employee who is not provided health benefits if the employee refuses the benefits and the employee's contribution to the premium is no more than $40 per month. (2) If applicable the contractor has the option to both Pay and Play.

5. **Exemptions/Waivers:** The City of Houston will award a contract to a contractor that neither Pays nor Plays only if the contractor has received an approved waiver (Form POP-4 requested by City departments only).

6. **Administration**: Contractor performance in meeting Pay or Play program requirements will be managed by the contracting department. The Office of Business Opportunity (OBO) has administrative oversight of the program, including audit responsibilities (department compliance). Questions about the program should be referred to the Department POP Liaison an updated contact list is available on http://www.houstontx.gov/obo/popforms.html or call Gracie Orr with the Office of Business Opportunity at 832-393-0633.

II. Documentation and Reporting Requirements

A. Document that must be signed and returned to administering department with the bid/proposal.

1.) City of Houston Pay or Play Program Acknowledgment Form (Form POP-1) acknowledges bidder/proposers' knowledge of the program and its requirements, and the intention to comply.

B. Documents that must be signed and returned to administering department within a period designated by the department's Contract Administrator, upon notification of low bidder or successful proposer status:

1.) Certification of Compliance with Pay or Play Program (Form POP-2)

***Note - Contractors that opt to "play" must provide proof of coverage, including document from insurance provider, and names of covered employees**.

2.) List of Subcontractors (Form POP-3)

***Note- Review the affidavit statement at the bottom of this form for further important POP Compliance information.**

C. Contractors reporting requirements:

1.) Contractors that opt to Pay
Provide monthly reports to administering department, detailing names of employees, hours worked, exemptions (if any) and amount owed. (Form POP-5)

2.) Contractors that opt to Play
Provide periodic reports to the contract administrator showing proof of coverage (insurance premium invoice or insurance card) reporting schedule will be determined by administering department based on length of contract. (Form POP-7)

3.) Employee Waiver Request
Contractor may request POP program waiver by submitting the request on POP-8 if the employee is less than 18 years old, employee has other health coverage such as through spouse or parents, or Medicare/Medicaid.

Note proof of coverage must be provided in the form of a copy of the employee's insurance card. (Remove social security numbers if applicable)

4.) Contractors shall submit an initial report with the second invoice to the department. Payments based on monthly reports are due to the contracting department with submission of the following month's invoice. Payments may be made out to the City of Houston preferably via cashier check or business check.

III. Compliance and Enforcement

The Office of Business Opportunity will audit program compliance. Contractors willfully violating or misrepresenting POP program compliance will be subject to corrective and/or punitive action, including but not limited to the assessment of fines and penalties and/or debarment. The Pay or Play Program Requirements Form and all other POP Forms are available for downloading from the City of Houston's Website at http://www.houstontx.gov/obo/popforms.html

Document 00910

ADDENDUM NO._____

Date of Addendum: _____
****Enter date by hand when signed for release****

PROJECT NAME: Rampart Street (Sub-Project 2) Drainage and Paving

PROJECT NO: WBS No. M-000265-0002-4

BID DATE: October 15, 2015 (There is no change to the Bid Date.)

FROM: J. Timothy Lincoln, P.E., City Engineer
City of Houston, Department of Public Works and Engineering
611 Walker Street
Houston, Texas 77002
Attn: *Maher H. Saied, Sr. Project Manager*, Project Manager

TO: Prospective Bidders

This Addendum forms a part of the Bidding Documents and will be incorporated into the Contract documents, as applicable. Insofar as the original Project Manual and Drawings are inconsistent, this Addendum governs.

****

Use the following heading and select the appropriate wording for postponement of the Bid Date. Delete the statement beside Bid Date above which indicates that the Bid Date is unchanged. If change in Bid Date, issue as separate addendum. Delete this section entirely if there is no change in Bid Date.

****

CHANGE IN BID DATE

The Bid Date for this Project has been changed from _____ (Date) to _____ (Date).

[Time of day and place for submittal of bid remains the same]. [Time of submittal has been changed from _____ (Time) to _____ (Time). The place for submittal remains the same].

The bid date for this project has been indefinitely postponed.

****

Delete the following paragraph if the sole purpose of the Addendum is to postpone the Bid Date.
****

This Addendum uses the change page method: remove and replace or add pages, or Drawing sheets, as directed in the change instructions below. Change bars (|) are provided in the outside margins of pages from the Project Manual to indicate where changes have been made; no change bars are provided in added Sections. Reissued Drawing Sheets show the Addendum number below the title block and changes in the Drawing are noted by a revision mark and enclosed in a revision cloud.

****
Number each item of the Addendum beginning with 1 through the total number of change items in the Addendum. Sample entries are provided in brackets.
****

CHANGES TO PREVIOUS ADDENDA

****
Reference Addendum Number and item number to correct clarifications or make minor corrections of changes issued by previous Addenda.
****

ADDENDUM NO. _____

[1. Item 5. Change to read as follows:]

CHANGES TO PROJECT MANUAL

****
Follow this format to sequence changes to the Project Manual.
****

BIDDING REQUIREMENTS

****
Give the individual change instructions for each item of change by Document number and title. List changes in order of Document number.
****

[2. Document 00020 - Notice to Bidders. Replace page 00020-2.]

CONTRACT FORMS

[3. Document 00610 - Replace revised Performance Bond, page 00610-1.]

CONDITIONS OF THE CONTRACT

[4. Document 00800 - Supplementary Conditions. Replace page 00800-4 and add page 00800-5.]

SPECIFICATIONS

[5. Section 02050 - Demolition. Add section including pages 02050-1 through 02050-3.]

CHANGES TO DRAWINGS

[6. Delete Sheet S-9, Beam Schedule, and replace with Sheet S-9-A.]

CLARIFICATIONS

[7. Document 00210 - Supplementary Instructions to Bidders states that no substitutions will be considered during the bidding phase. Substitutions will be considered during the first 15 percent of the Contract Time or first 90 days of the Contract, whichever is less, as stated in Document 00700 - General Conditions.]

END OF ADDENDUM NO. _____

DATED: _____

Ravi Kaleyatodi, P.E., CPM
Senior Assistant Director
Department of Public Works and Engineering

RK:DPS:MHS:sdd

END OF DOCUMENT

Document 00911

NOTICE OF
ADDENDUM NO.

Date of Addendum: _____

PROJECT NAME: Rampart Street (Sub-Project 2) Drainage and Paving

PROJECT NO: M-000265-0002-4

BID DATE: October 15, 2015 (There is no change to the Bid Date.)

FROM: J. Timothy Lincoln, P.E., City Engineer
City of Houston
Department of Public Works and Engineering
611 Walker, 15th Floor
Houston, Texas 77002
Attn: Maher H. Saied, Sr. Project Manager, Project Manager

TO: Prospective Bidders

The referenced Addendum forms a part of the Bidding Documents and will be incorporated into the Contract documents, as applicable.

Written questions regarding this Addendum may be submitted to the Project Manager following the procedures specified in Document 00200 – Instructions to Bidders. Immediately notify the City Engineer through the named Project Manager upon finding discrepancies or omissions in the Bid Documents.

_____
Ravi Kaleyatodi, P.E., CPM
Senior Assistant Director
Department of Public Works and Engineering

END OF DOCUMENT

Document 00931

REQUEST FOR INFORMATION

1. PROJECT No.: M-000265-0002-4
2. RFI No.: _____
3. PROJECT NAME: Rampart Street (Sub-Project 2) Drainage and Paving
4. CONTRACTOR: [Contractor Name]
5. CONTRACT No.: _____
6. SPECIFICATION Nos.: _____
7. DRAWING Nos.: _____
8. RESPONSE CODE: [_] CRITICAL [_] ROUTINE 9.DATE RESPONSE REQUIRED: _____
10. INFORMATION REQUIRED:

11. _____ _____ _____
CONTRACTOR (Signature) TITLE DATE

12. RESPONSE:

13. _____ _____
PROJECT MANAGER (Signature) DATE

14. **If Contractor believes the response given in Item 12 requires an adjustment in Contract Price or Contract Time, Contractor shall submit a timely proposal so as not to delay Contractor's Work in accordance with General Conditions, Article 7 - Changes in the Work.**

END OF DOCUMENT

Section 01110

SUMMARY OF WORK

PART 1 G E N E R A L

1.01 SECTION INCLUDES

A. Summary of the Work including work by the City, City-furnished Products, work sequence, future work, Contractor use of Premises, special conditions for substantial completion and City occupancy.

1.02 WORK COVERED BY CONTRACT DOCUMENTS

A. The purpose of this project is to provide storm drainage improvements to address and reduce the risk of structural flooding in this area:

1. This project includes pavement improvements, storm sewer improvements, sanitary sewer relocations, as well as water line improvements per City of Houston recommendations. The City of Houston Wastewater Operations Branch determined that no sanitary sewer replacements were necessary.

2. This project benefits the Gulfton area which includes Rampart Street from Bissonnet Street to Clarewood Drive, Clarewood Drive from Rampart Street to Mullins Drive and Mullins Drive from Clarewood Drive to High Star Drive.

B. Work of the Contract is for construction of Rampart Street Drainage and Paving Sub-Project 2 including:

1. Contractor shall take caution during construction activities not to damage the existing monument on the southwest corner of Mullins and Clarewood Drive. Contractor to protect existing monument(s) encountered within the project limits. Contractor shall be responsible for any damage to existing monument(s) due to construction, and shall replace the damaged monument(s) to its original condition at no cost to the City.

2. Ground Water Control: Contractor to refer to Geotechnical Investigation Report prepared by HVJ Associates, Inc. Report No. HG1110720, Dated January 3, 2014, Section 7.6 Groundwater Control for dewatering recommendations.

3. Contractor to use special care when removing or installing utility items within the PPCA areas delineated in the Phase II ESA

Report prepared by Berg Oliver Associates, Inc., Report No. 9529H-P2, Dated November 2014, on Rampart Street between Stations 18+00 to 19+50 and Stations 33+75 to 34+25, as shown on plans. The Contractor is required to inform the COH PWE Construction Manager within 24 hours if actual PPCA soil and water contaminants are encountered by the Contractor. The specific underground utilities and appurtenances that are to be installed by the Contractor within these areas include but are not limited to: reinforced concrete storm sewer leads, storm sewer pipe, storm sewer inlets, storm sewer manholes, water lines and appurtenances, and new water services.

4. Contractor to provide pedestrian access along street and adjacent to his work zone at all times. Pedestrian zones and all weather pedestrian crossings to be separated from the work zones by tree protection fencing. The cost is incidental to traffic control.

5. Contractor to adjust existing sprinkler heads as needed during construction. This work will be incidental to work done under City of Houston Specification 01740 – Site Restoration.

6. All existing utilities crossing trench to be properly braced during construction in the area. Bracing method to be approved by governing authority.

7. Contractor shall restore existing yard drains that drain individual lots to existing or better condition. Damaged yard drains shall be replaced with a 6-inch diameter high density polyethylene (HDPE) pipe and connected to the existing drain with a watertight connection. No separate payment will be made for PVC yard drains or the connection of existing yard drains or storm drains to proposed ditches or inlets. Surface restoration under Section 01145 – Use of Premises, covers PVC and yard drains as incidental work to restore the site to the existing condition before construction or better.

8. All areas within the right-of-way where existing pavement is removed and not replaced shall be sodded. Areas between sidewalk and curb shall be sodded.

9. Contractor to remove wheel stops, bollards, metal posts, dumpsters, guard rails, fences, concrete posts and other items within the right-of-way if conflicts with construction. This work is incidental to pavement removal. Contractor to stack removed items at right-of-way for Owner. Contractor to coordinate with

Owner prior to removing items.

10. All existing mailboxes damaged or in need of relocation shall be done by the Contractor during construction including restoration of like boxes in kind. U.S. Postal service mailboxes and delivery routes within each neighborhood interrupted by Construction shall be relocated and detoured at the Contractor's expense and shall be coordinated with the local branch of the U.S. Postal Service. This work will not be paid for separately but shall be incidental to the work.

11. Prior to the start of construction the Contractor shall field verify existing traffic and street name signs affected by the project, and document existing signs and their locations. All existing signs shall be inventoried and documented per City of Houston Drawing No. 01509-01. Prior to removal, Contractor is to provide a list of documented signs to the City Project Manager for approval.

12. The Contractor shall safe-guard existing signs whether they continue to remain visible and upright in the field, or when they are collected and stored in a secure area when temporary signs are used. Existing signs noted on signing plans to remain in place are to be protected during construction.

13. The Contractor shall remove and salvage existing signs and install new signs where noted on Signing Plans. Existing signs will not be reused or relocated. All new signs shall be as shown on Signing Plans, and must meet City standards for materials, size, and retro-reflectivity. The Contractor shall install all permanent signs, posts, and hardware as specified in City of Houston Specification 01554 – Traffic Control and Street Signs. According to Specification 01554 – Traffic Control and Street Signs, payment for installation of new signs will be on the basis of each sign installed.

14. Where Management District signs (both overhead and corner-mounted) are encountered, the Contractor is to re-install, or preserve, store and notify the affected District where the signs can be retrieved. Where barricades are encountered, Contractor is to coordinate relocation with property owner. Metro bus stop signs to be installed by Metro. Contractor to coordinate this work with Metro.

15. The Contractor shall trim all tree branches as necessary, to

allow for sign visibility. No separate payment will be made for trimming tree branches.

16. The work includes permanent pavement markings and striping, traffic control, storm water pollution prevention measures, and other related appurtenant work. Contractor shall remove and replace permanent signs and pavement markings. Pavement striping shall be in accordance to standard City of Houston specifications and details.

17. Traffic control includes temporary signing, temporary markings and adjustments as shown on the Traffic Control and Detour Plans. Contractor shall maintain adequate traffic control for the duration of the project, as provided in the Contract Drawings. Traffic control will be in accordance with the latest version of the Texas Manual of Uniform Traffic Control Devices (TMUTCD).

18. Diversion pumping is incidental to the proposed work. Contractor will be required to follow all submittal procedures outlined in Specification 1506- Diversion Pumping. The submittal includes a Diversion Pumping Plan showing location, number and size of pumps, number, location, size and type of hoses or rigid piping, pipes or hoses cross roadways, temporary trenches, and support bridges. For full description see Specification 1506- Diversion Pumping.

19. Full pavement reconstruction along Rampart Street from Bissonnet Street to Bellaire Boulevard consists of replacing existing 20-ft to 22-ft of asphalt pavement with a 27-ft. face to face asphalt pavement section with 6-inch slotted concrete curb and gutter and 5-ft. sidewalk on the east side of Rampart. Standard non slotted 6-inch slotted concrete curb and gutter shall be installed at curb returns and pavement transitions.

20. 8-inch High-Early Strength Reinforced Concrete is to be placed on Rampart Street and Bissonnet Street intersection, and Rampart Street and Bellaire Boulevard intersection, as shown on plans.

21. Full pavement reconstruction along Rampart Street from Bellaire Boulevard to De Moss Drive will be replaced with a 40-ft. face to face concrete pavement section with 6-inch concrete curb and 5-ft. sidewalks on both sides of the street.

22. Full pavement reconstruction along Rampart Street from De Moss Drive to Clarewood Drive consists of replacing existing

25-ft to 27-ft of asphalt pavement with a 27-ft. face to face concrete pavement section with 6-inch concrete curb and 5-ft. sidewalks on both sides of the street.

23. Full pavement reconstruction along Clarewood Drive from Rampart Street to Mullins Drive will be replaced with a 27-ft. face to face concrete pavement section with 6-inch curb.

24. Full pavement reconstruction along Mullins Drive from Clarewood Drive to High Star Drive will be replaced with a 27-ft. face to face concrete pavement section with 6-inch curb.

25. Full depth pavement saw cutting for concrete pavement will be paid by linear foot for joining proposed concrete pavement with the existing roadway. Expansion joints and dowels for this work will be paid under its respective bid item under Document - 00410B Bid Form.

26. Sidewalks and wheelchair ramps shall comply with current City of Houston and Texas Department of Licensing and Regulation (TDLR) requirements. Additionally, Contractor to adhere to tapering the driveways from the proposed paving to the right-of-way.

27. Contractor shall mill and overlay a section of existing asphalt pavement with 2-inch HMAC along Mullins Drive to the dead-end north of High Star Drive.

28. Contractor shall mill and overlay 25-foot pavement transitions at Rampart Street and the existing side street intersections with 2-inch HMAC where noted on the construction plans.

29. Contractor to remove and replace existing driveways where noted on the construction plans. Contractor to coordinate work with property owner.
    a) Contractor to install valley gutters in driveways where noted on the construction plans.
    b) Contractor to identify all existing driveways with sensors prior to removal of existing driveways. Contractor to protect existing sensors in driveway pavement during construction. Contractor to repair and/or replace damaged sensors to existing condition or better at no cost to the City and shall be in working condition upon completion of construction.
    c) Contractor to protect existing gate(s) and existing fence(s) at right-of-way during construction.
    d) Contractor to protect existing canopies during construction.

30. Contractor to saw cut existing pavement for driveway and sidewalk removal and installation. Contractor to install expansion joints and dowels as required for this work. Saw cut, expansion joints, and dowels for this work is incidental to driveway and sidewalk installation.

31. Contractor to remove existing retaining wall within right-of-way where noted on the construction plans and as necessary for construction. No separate payment for the removal of the existing retaining walls. This work is incidental to pavement removal. Contractor to install proposed integral high curb/retaining wall where noted on the construction plans. Integral high curb/retaining wall will be paid under its respective bid item under Document -00410B Bid Form.

32. Positive drainage shall be maintained at all times. Contractor to provide temporary drainage during the various construction phases of the project. Refer to Specification 01504 – Temporary Facilities and Controls for further detail.

33. Contractor shall promptly repair any damaged water service lines encountered during construction, whether noted on plans or found in the field, to avoid extended water service interruptions. The costs to preserve existing water service lines are incidental to all other pay items and are at no additional cost to the City of Houston.

34. Water line improvements include replacing existing 8-inch asbestos-cement water lines along Rampart Street from Bissonnet Street to Alethea Lane with 8-inch PVC water lines and existing 2-inch, 4-inch, and 12-inch cast iron water line crossings with PVC pipe. Contractor to use special care when removing, replacing or connecting to existing asbestos-cement water lines as per City of Houston Specification 02511 – Water Lines. Existing water line service leads to be replaced and transferred to the proposed water line.

35. Water line improvements include replacing existing 8-inch asbestos-cement water lines along Rampart Street from Edgemoor Drive to Bellaire Boulevard with PVC pipe. Contractor to use special care when removing, replacing or connecting to existing asbestos-cement water lines as per City of Houston Specification 02511 – Water Lines. Existing water line service leads to be replaced and transferred to the proposed water line.

36. Water line improvements include replacing an existing 8-inch water line crossing at Rampart Street and Jessamine Street and Rampart Street and Edgemoor Drive. Refer to the construction plans for exact locations.

37. Portions of existing 6-inch and 8-inch water lines are required to be removed and replaced to construct the proposed utilities for this project where noted on the construction plans. Removal of each size line is paid per linear foot. Cutting and plugging of existing water lines for removal to be included in the price of removal. Additional cutting and plugging of existing water lines for the Contractor's convenience shall be at the Contractors expense.

38. Contractor to remove and salvage existing fire hydrants and install new fire hydrants where noted on the construction plans. Existing fire hydrants to remain in service until the proposed fire hydrants are in service. Waterline to be installed and chlorinated before installation of the gate valve and box.

    The City of Houston will retain salvage rights to all material and equipment. All material and equipment retained by the City of Houston shall be delivered to a point designated by City of Houston representative, Mr. Arturo Carillo (832) 395-3558. Any material or equipment not retained by the City of Houston shall be removed from the site and disposed of by the Contractor in accordance with the applicable regulations.

39. Contractor to provide casing on 8-inch to 12-inch sanitary sewer pipe through reinforced concrete box, junction box, or manholes to avoid conflicts with proposed storm sewer where noted on the construction plans.

40. Contractor to TV inspect the existing gravity sanitary sewers within the right-of-way to identify existing sanitary sewer leads. If in conflict with proposed construction, Contractor to remove and replace existing sanitary sewer service leads and install new clean-outs. Contractor to match existing flow line of the service lead and transfer service. A clean-out will not be placed on the sanitary sewer service lead to empty lots. Contractor shall notify the City of all sanitary sewer interruptions two (2) weeks in advance. Optional bid items are included for this work in Document 00410 – Bid Form, Parts B.

41. Replacement of existing storm sewer and culverts along

Rampart Street from south of Bissonnet Street to Clarewood Drive. Contractor to install precast junction boxes and reinforced-concrete box (RCB) ranging in size from 9'x9' RCB to 7'x7' RCB. No separate payment will be made for proposed bends in the storm sewer box. Cost will be considered incidental to the storm sewer box.

42. Replacement of the existing storm sewer along Clarewood Drive from Rampart Street to Mullins Drive and along Mullins Drive from Clarewood Drive to High Star Drive. Contractor to install 60-inch reinforced-concrete pipe (RCP).

43. Precast storm sewer junction boxes and precast storm manholes will be constructed at the downstream and upstream end of each continuous reach of storm sewer. Existing storm sewer inlets and storm sewer leads will be replaced.

44. No separate payment will be made for connecting storm sewer box/pipes and/or yard drains to proposed/existing manholes, reinforced concrete boxes, and junction boxes. Cost will be considered incidental to the various construction bid items included in Document 00410 – Bid Form, Parts A & B.

45. Storm sewer plugs are proposed at various locations shown on the drawings. These plugs are to be installed in accordance with Specification Section 04210- Brick Masonry for Utility Construction. Payment for the storm sewer plugs shown on the drawings will be incidental to the plug and abandon storm sewer bid items included in Document 00410 – Bid Form, Parts A & B.

46. Precast Storm Junction Boxes structural design to be provided by Contractor's supplier. Supplier to provide shop drawings signed and sealed by a Texas Licensed Professional Engineer.

47. Existing traffic signals will be replaced at two intersections along the project route:

    a) Rampart Street and Bissonnet Street.
    b) Rampart Street and Bellaire Boulevard.

48. Contractor to place Portable Changeable Message Signs for each direction two weeks prior to construction closure and prior to each step of the major intersection construction.
    a) Rampart Street and Bissonnet Street.
    b) Rampart Street and Bellaire Boulevard.

    For full description, see TXDOT Specification 6834 – Portable

Changeable Message Sign.

49. No separate payment will be made for roadway borrow (off-site) material. Filling of existing ditches is an optional bid item paid for as Embankment Fill.

50. Contractor to install precast safety end treatments for drainage structures, or install or replace pipe runners or pipe runner assemblies on existing drainage structures where indicated on plans. For full description see TXDOT Specification 467 – Safety End Treatment.

51. Contractor will be responsible to provide tree and plant protection in accordance with City standards, specifications, details and the Tree Protection Plans (TPP) included in the construction plans.

    Contractor is responsible for obtaining all tree removal permits prior to any tree removals that are not included in the TPP. Permits can be obtained from the City of Houston Department of Parks and Recreation by contacting Mr. Victor Cordova at (832)-395-8454 and/or Dale Temple at (832)-395-8459. Any tree removal permit provided to the Contractor by the City of Houston prior to construction will only be issued for the trees listed for removal in the Contract Drawings.

    Notify City of Houston Parks and Recreation Department representative Mr. Victor Cordova, City Forester, at (832)-395-8454 at least two (2) weeks in advance of clearing and/or cutting any tree.

52. Contractor will be responsible to implement the Storm Water Pollution Prevention Plan (SWPPP) and use best practices during construction. Project construction activities will disturb an area greater than 5 acres. See Section 01410 – TPDES Requirements. Contractor shall be responsible for all fees, including notices, filings and permits, associated with SWPPP and TPDES requirements at no additional cost to the City of Houston. The Cash Allowance for TPDES permit is limited to the application fee for the Notice of Intent for Storm Water Discharges Associated with Construction Activity under TPDES General Permit.

53. The Contractor will be responsible to obtain all necessary permits, including, but not limited to: lane closures, street cut, driveway and tree removal. Permits that are required and are

not paid under Cash Allowances are incidental to all other pay items and are at no additional cost to the City of Houston.

54. Project identification signs are required on this project. See Section 01580 – Project Identification Signs. Cost is incidental to Bid Item for Mobilization.

55. Contractor may not move construction activities from one street to another without completely finishing the prior street.

56. Contractor is to maintain access to all residences and businesses along construction route at all times during construction.

57. Contractor is to comply with O.S.H.A regulations and state of Texas law concerning excavation, trenching and shoring.

58. Contractor will be responsible to use caution and due diligence where the proposed improvements are in proximity to existing private utilities including gas lines, buried or overhead cables, etc., so as to not adversely impact such private utilities within the project area. Contractor will contact and coordinate with the private utility agencies whose facilities may be impacted by the proposed improvements, as required. The proposed improvements cross existing AT&T, CenterPoint Gas and CenterPoint Energy facilities at various locations in the project limits.

59. Contractor to provide a temporary field office for the duration of construction. See Section 01520 – Temporary Field Office. Cost is incidental to Bid Item for Mobilization.

60. Existing overhead power lines are located within roadway throughout the project limits. The Contractor should use extreme caution when working around these overhead power lines.

61. Existing gas and electrical lines are located at various locations throughout the project. The Contractor shall coordinate with CenterPoint Energy to verify locations of existing facilities throughout the project limits.

62. Existing fiber cables and ducts are located at various locations throughout the project limits. The Contractor shall coordinate with AT&T and ensure acceptable clearances are available prior to construction.

1.03 CASH ALLOWANCES

A. Include the following specific Cash Allowances in Contract Price under provision of General Conditions Paragraph 3.11:

1. Street Cut Permits
2. TPDES Permit
3. Lane Closure Permit Fee
4. CenterPoint Energy Remove and Install Street Lights

1.04 CITY-FURNISHED PRODUCTS

A. Items Furnished by the City for Installation and final connection by Contractor: None.

B. Contractor's Responsibilities:

1. Arrange and pay for Product delivery to the site.
2. Receive and unload Products at the site. Jointly with the City, inspect for completeness or damage.
3. Handle, store, install, and finish Products.
4. Repair or replace damaged items.

1.05 WORK SEQUENCE

A. Construct the Work in Phases during the construction period. Coordinate construction schedule and operations with the City:

Contractor shall provide and install traffic control devices in conformance with Part VI of Texas Manual of Uniform Traffic Control Devices (TMUTCD) latest edition with revisions during the entire construction period as shown on plans. Contractor cannot deviate from the approved Traffic Control Plans (TCP) in the contract drawings.

Contractor shall work within one (1) area at a time per Phase or Step. Construction zone shall not exceed 800 feet and contractor shall not close consecutive intersections. Contractor may not move construction activities from one street to another without completely finishing the

prior street.

Contractor shall follow Traffic Control Plan Phasing and Step procedures. Refer to Traffic Control Plans included in the construction plans. If using a different traffic control plan, submit the plan for approval. The plan must conform to TMUTCD requirements and be sealed by a Registered Texas Professional Engineer.

B. COORDINATION OF WORK

1. Contractor to take precaution when digging close to existing CenterPoint Energy Transmission Poles along Rampart. Contractor to submit a proposed shoring plan to CenterPoint Energy for approval, and notify Scott Humble at (713)-207-6747 and/or Travis Drabek at (713)-207-6480 thirty (30) days prior to digging near these poles.

   The following existing transmission pole information was provided by CenterPoint Energy for the Contractors use in developing shoring plans:
   - The Transmission poles no. 17220 to 17207 in question are direct embedded narrow base steel poles.
   - The poles are buried to a depth of about 17 feet.
   - The ground line moment the poles are designed for is 1,250 ft-kips.
   - The pole base diameter is approximately 2 ft.
   - Jack shore to support trench wall for 30-ft passing each pole.

   The following maps of the existing transmission poles were provided by CenterPoint Energy:

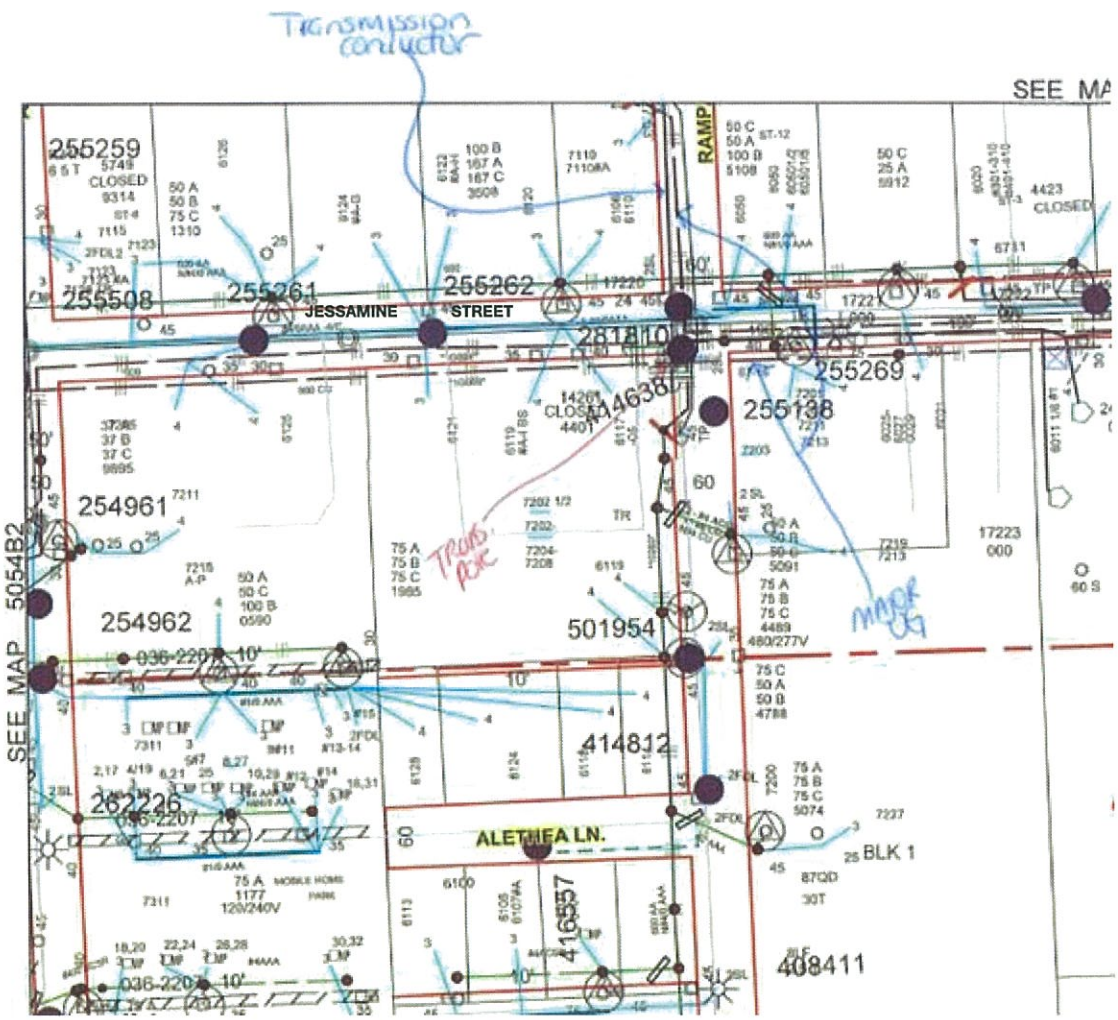
Transmission conductor
SEE MA
RAMP
255259
255508
255261
JESSAMINE
STREET
255262
281810
255269
255138
254961
254962
SEE MAP 5054B2
501954
414812
262226
ALETHEA LN.
408411
MAJOR UG
BLK 1
MOBILE HOME PARK

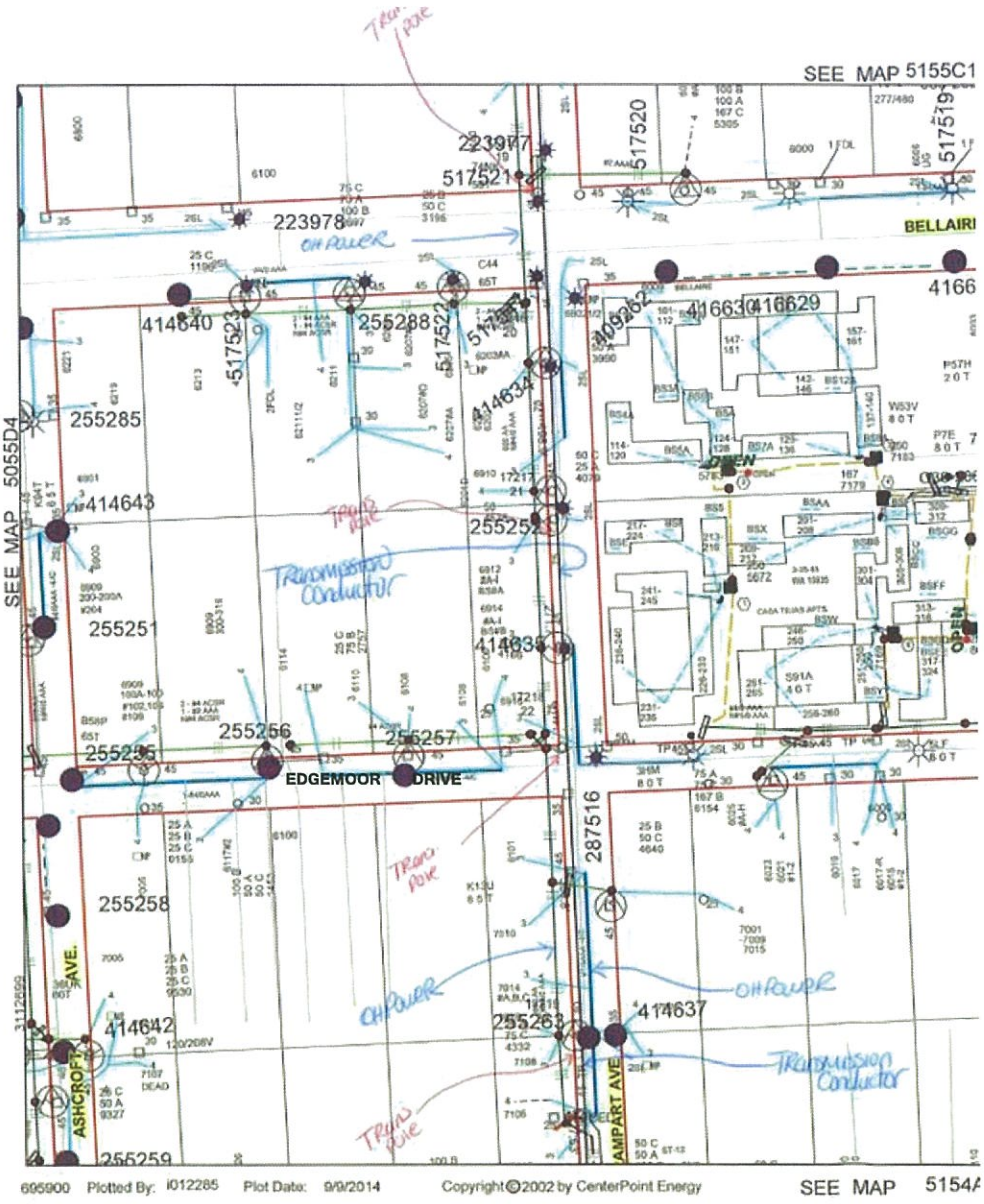
SEE MAP 5155C1
SEE MAP 5055D4
EDGEMOOR DRIVE
ASHCROFT AVE.
RAMPART AVE
BELLAIRI
OPEN
OPEN
223977
223978
517521
517520
517519
517523
517522
414640
255288
414634
255285
414643
255252
255251
414633
255256
255257
255255
287516
255258
414642
255263
414637
255259
4166
416630
416629
Transmission Conductor
Transmission Conductor
OH POWER
OH POWER
TRANS POLE
TRANS POLE
695900 Plotted By: i012285 Plot Date: 9/9/2014
Copyright©2002 by CenterPoint Energy
SEE MAP 5154A

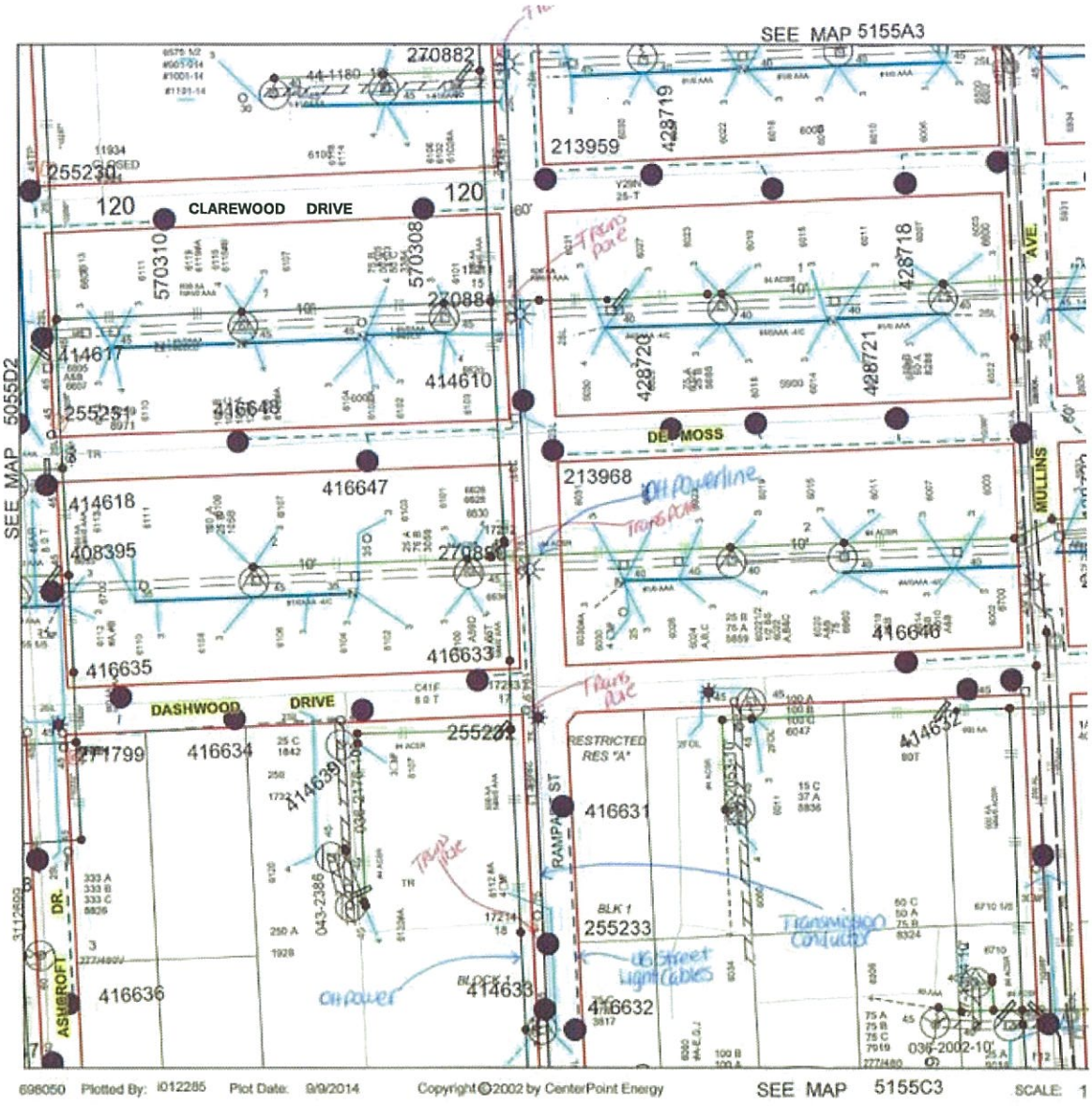
SEE MAP 5155A3
SEE MAP 5055D2
CLAREWOOD DRIVE
DASHWOOD DRIVE
DEL MOSS
RAMPART ST
MULLINS AVE.
ASHCROFT DR.
270882
255230
120
570310
570308
270884
414617
414610
255231
416648
416647
414618
408395
270886
416635
416633
213959
428719
428718
428720
428721
213968
416646
255232
271799
416634
414639
416636
414633
255233
BLK 1
416631
416632
414632
RESTRICTED RES "A"
Off Powerline
Transmission
Trans Pipe
Trap Pipe
Off Power
Transmission Conduits
Street Light Cables
036-2002-10
036-2178-10
043-2386
SEE MAP 5155C3
SCALE: 1
698050 Plotted By: I012285 Plot Date: 9/9/2014
Copyright ©2002 by CenterPoint Energy

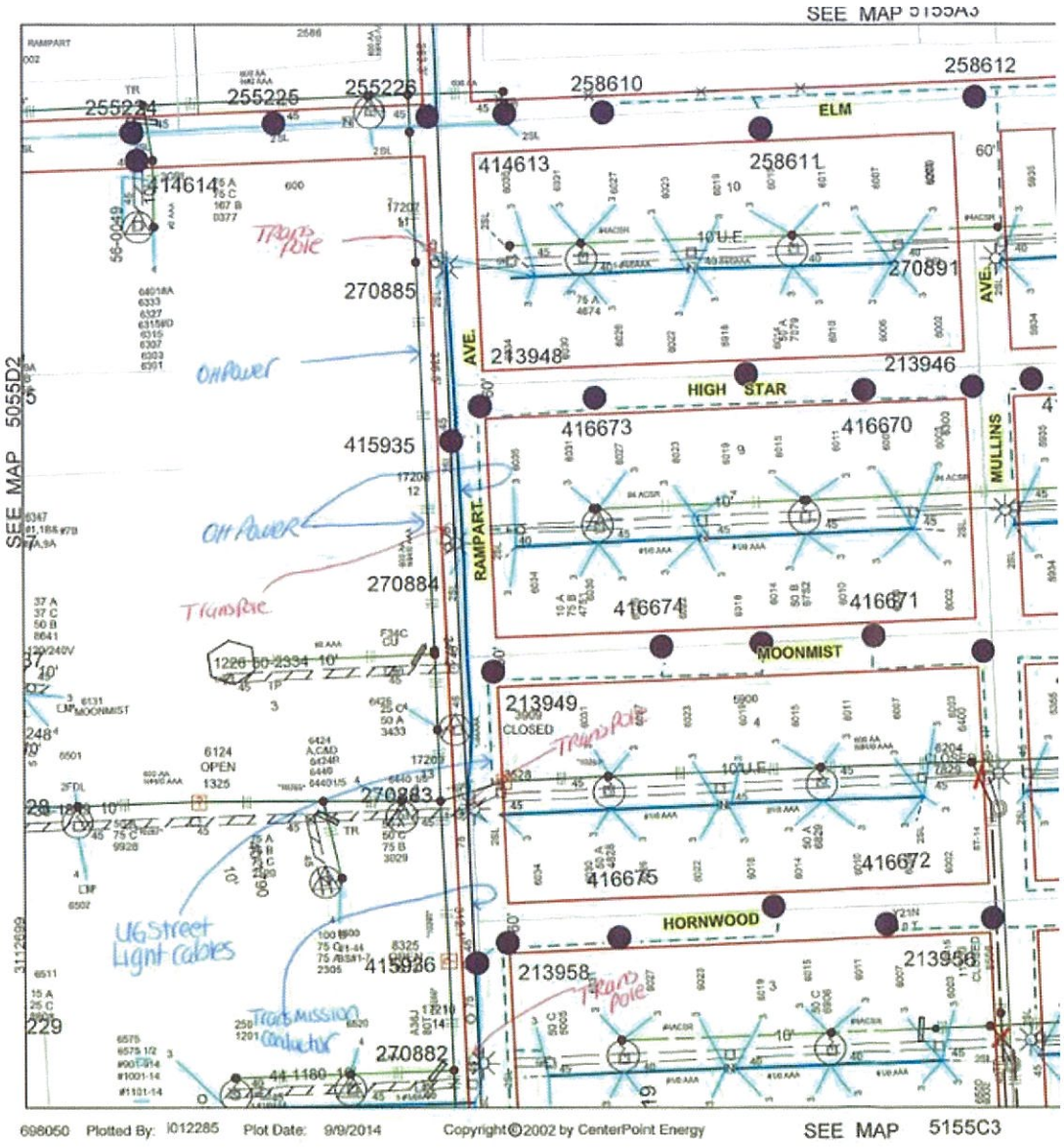

2. Contractor to notify METRO two weeks prior to disturbing existing bus shelters/pad, coordinate with METRO to remove and replace existing bus shelter and/or bus pad. Contractor to coordinate with METRO for pad inspection. The Contractor shall contact Rodrigo Bravo at (713)-615-6280 or Omar Lopez at (713)-615-6156.

3. Contractor to coordinate with affected property owners to provide temporary parking within construction zone during construction of driveways.

4. Refer to Section 01312- Coordination and Meetings. The

following are the contact numbers for Super Neighborhoods and School Districts:

a. Bissonnet @ Ashcroft Key Map 531J
   i. (27) GULFTON
   ii. The Energized for Excellence Academy, Lois Bullock, 6201 Bissonnet St. Houston, TX 77081
b. Rampart @ Pine Key Map 531J
   i. (27) GULFTON
   ii. Braeburn Elementary School, Santos Reyes 7707 Rampart Houston, TX 77081

1.06 CONTRACTOR USE OF PREMISES

A. Comply with procedures for access to the site and Contractor's use of rights-of-way as specified in Section 01145 - Use of Premises.

B. Construction Operations: Limited to the City's rights-of-way provided by the City and areas shown or described in the Contract documents.

C. Utility Outages and Shutdown: Provide a minimum of 48 hours notice to the City and private utility companies (when applicable), excluding weekends and holidays, in advance of required utility shutdown. Coordinate all work as required.

D. Private Utility Relocations: Pursuant to Section 40-395 of the City of Houston (City) Utility Relocation Ordinance Program (URO), The following private utilities were identified and scheduled for relocation within the scope of the project limits. Based upon the relocation schedules provided by the utility owners, the City anticipates these relocations to be completed by the dates listed below, and unless otherwise stated, clearance of these potential obstructions will be performed by their respective owners.

Contractor is responsible for scheduling and coordinating construction activities associated with private utility construction so as not to adversely impact construction schedule. Only one mobilization is allowed for this contract. Contractor will notify the City's representative once the utility relocation schedule has been established. See below for contact information and estimated relocation times for the private utility companies.

CenterPoint Energy Electric Contact: Cynthia Martinez
1111 Louisiana – 943A, Houston, Texas 77002
(713)-207-6555; cindy.martinez@centerpointenergy.com

- **CNP Electric**: Underground conflicts & relocations.
- Mullins Drive at Clarewood Drive–
  - Construction Completion Date: 9/18/15.
- Rampart Street at Jessamine Street –
  - Construction Completion Date: 11/13/15.

CenterPoint Energy Gas Contact: Louis Cardenas
1111 Louisiana, 22nd floor, Gas Engineering, Houston, TX 77002
(713) 207-4605; louis.cardenas@centerpointenergy.com

- **CPE Gas**: Underground conflicts & relocations.
  - Construction Completion Date: 10/1/15

AT&T Contact: Diana Ward
6500 West Loop South, Zone 1.3, Houston, TX 77401
(713) 660-5304; dc8581@att.com

- **AT&T Texas: No relocations required.** AT&T determined that conflicts could be handled with critical locates on the plan drawings and adjustments during construction. Contractor to brace and support existing conduits during construction. In addition, there are frame and cover adjustments required. Contractor must contact AT&T Texas three weeks in advance of requiring the adjustments.

CenterPoint Energy Street Lighting Contact: Robert Tinnin
4700 S. Shaver Bldg. I, Houston, Texas 77034
(713) 945-6242; Robert.Tinnin@centerpointenergy.com

- **CNP Street Lights:** Final street light relocation agreement CPE Estimate was received 4-9-15.

Comcast Contact: Helbert Salandanan
7033 Airport Blvd., Houston, Texas 77061
281-624-3024; helbert_salandanan@cable.comcast.com

- **Comcast: No relocations required.**

a. The following is a description of the private utilities identified for relocation within the project limits:

Utility Owner	Type of Facility	Approximate Location	Estimated Clearance Date	Anticipated Effect to Construction
CenterPoint Electric	CPE Elec. Conduit	Rampart STA 17+83	Nov. 13, 2015	Elec. Conduit Relocation
CenterPoint Electric	CPE Elec. Conduit	Rampart STA 34+62 to STA 35+47	Nov. 13, 2015	Elec. Conduit Relocation
CenterPoint Electric	CPE Elec. Conduit	Rampart STA 35+78.51	Nov. 13, 2015	Elec. Conduit Relocation
CenterPoint Electric	CPE Elec. Conduit	Rampart STA 38+76 to STA 38+83	Nov. 13, 2015	Elec. Conduit Relocation
CenterPoint Electric	CPE Elec. Conduit	Clarewood STA. 8+41 or Mullins STA 1+06 to STA +13	Sept. 18, 2015	Elec. Conduit Relocation
CenterPoint Electric	CPE Elec. Conduit	Mullins STA 4+52	Sept. 18, 2015	Elec. Conduit Relocation
CenterPoint Electric	CPE Elec. Conduit	Rampart STA 36+23	Nov. 13, 2015	Elec. Conduit Relocation
CenterPoint Electric	CPE Elec. MH	Rampart STA 35+78	Nov. 13, 2015	Elec. MH Relocation
CenterPoint Electric	CPE Elec. MH	Rampart STA 17+55	Nov. 13, 2015	Elec. MH Relocation
Comcast	Comcast Buried Cable	Rampart STA 51+22	N/A	No conflict, Aerial Utility

Utility Owner	Type of Facility	Approximate Location	Estimated Clearance Date	Anticipated Effect to Construction
CenterPoint Street Light	CPE U.G. ST. LT Cable	Clarewood STA 5+31 to STA 5+33	Sept. 18, 2015	Cable Relocation.
CenterPoint Street Light	CPE U.G. ST. LT Cable	Clarewood STA 6+84	Sept. 18, 2015	Cable Relocation.
CenterPoint Street Light	CPE U.G. ST. LT Cable	Clarewood STA 8+79 Or Mullins STA 1+08 to STA 1+11	Sept. 18, 2015	Cable Relocation.
CenterPoint Street Light	CPE U.G. ST. LT Cable	Mullins STA 1+31	Sept. 18, 2015	Cable Relocation.
CenterPoint Street Light	CPE U.G. ST. LT Cable	Mullins STA 4+35	Sept. 18, 2015	Cable Relocation.
CenterPoint Street Light	CPE U.G. ST. LT Cable	Rampart STA 31+06	Nov. 13, 2015	Cable Relocation.
CenterPoint Street Light	CPE U.G. ST. LT Cable	Clarewood STA 1+58	Sept. 18, 2015	Cable Relocation.
CenterPoint Street Light	CPE U.G. ST. LT Cable	Clarewood STA 2+43	Sept. 18, 2015	Cable Relocation.
CenterPoint Street Light	CPE U.G. ST. LT Cable	Mullins STA 4+14	Sept. 18, 2015	Cable Relocation.
CenterPoint Street Light	CPE U.G. ST. LT Cable	Mullins STA 10+75	Sept. 18, 2015	Cable Relocation.

Utility Owner	Type of Facility	Approximate Location	Estimated Clearance Date	Anticipated Effect to Construction
CenterPoint Gas	CPE 4" IP STL Gas Line	Rampart STA 17+90	Oct. 1, 2015	Gas Relocation
CenterPoint Gas	CPE 2" IP STL Gas Line	Rampart STA 19+60	Oct. 1, 2015	Gas Relocation
CenterPoint Gas	CPE 2" IP STL Gas Line	Rampart STA 20+41	Oct. 1, 2015	Gas Relocation
CenterPoint Gas	CPE 2" IP STL Gas Line	Rampart STA 21+10	Oct. 1, 2015	Gas Relocation
CenterPoint Gas	CPE 2" IP STL Gas Line	Rampart STA 22+12	Oct. 1, 2015	Gas Relocation
CenterPoint Gas	CPE 2" IP STL Gas Line	Rampart STA 22+84	Oct. 1, 2015	Gas Relocation
CenterPoint Gas	CPE 2" IP STL Gas Line	Rampart STA 23+11	Oct. 1, 2015	Gas Relocation
CenterPoint Gas	CPE 2" IP STL Gas Line	Rampart STA 24+06	Oct. 1, 2015	Gas Relocation
CenterPoint Gas	CPE 2" IP STL Gas Line	Rampart STA 25+33	Oct. 1, 2015	Gas Relocation
CenterPoint Gas	CPE 2" IP STL Gas Line	Rampart STA 27+08	Oct. 1, 2015	Gas Relocation
CenterPoint Gas	CPE 2" IP STL Gas Line	Rampart STA 28+33	Oct. 1, 2015	Gas Relocation
CenterPoint Gas	CPE 2" IP STL Gas Line	Rampart STA 29+33	Oct. 1, 2015	Gas Relocation
CenterPoint Gas	CPE 2" IP STL Gas Line	Rampart STA 30+60	Oct. 1, 2015	Gas Relocation
CenterPoint Gas	CPE 2" IP STL Gas Line	Rampart STA 31+42	Oct. 1, 2015	Gas Relocation

Utility Owner	Type of Facility	Approximate Location	Estimated Clearance Date	Anticipated Effect to Construction
CenterPoint Gas	CPE 2" IP STL Gas Line	Rampart STA 32+29	Oct. 1, 2015	Gas Relocation
CenterPoint Gas	CPE 2" IP STL Gas Line	Rampart STA 33+21	Oct. 1, 2015	Gas Relocation
CenterPoint Gas	CPE 2" IP STL Gas Line	Rampart STA 35+31	Oct. 1, 2015	Gas Relocation
CenterPoint Gas	CPE 3" IP STL Gas Line	Rampart STA 35+52	Oct. 1, 2015	Gas Relocation
CenterPoint Gas	CPE 2" IP STL Gas Line	Rampart STA 35+57	Oct. 1, 2015	Gas Relocation
CenterPoint Gas	CPE 2" IP STL Gas Line	Rampart STA 36+03	Oct. 1, 2015	Gas Relocation
CenterPoint Gas	CPE 2" IP STL Gas Line	Rampart STA 36+23	Oct. 1, 2015	Gas Relocation
CenterPoint Gas	CPE 2" IP STL Gas Line	Rampart STA 42+14	Oct. 1, 2015	Gas Relocation
CenterPoint Gas	CPE 2" IP STL Gas Line	Rampart STA 42+14	Oct. 1, 2015	Gas Relocation
CenterPoint Gas	CPE 2" IP STL Gas Line	Rampart STA 42+47	Oct. 1, 2015	Gas Relocation
CenterPoint Gas	CPE 2" IP STL Gas Line	Rampart STA 42+81	Oct. 1, 2015	Gas Relocation
CenterPoint Gas	CPE 2" IP STL Gas Line	Rampart STA 44+43	Oct. 1, 2015	Gas Relocation
CenterPoint Gas	CPE 2" IP STL Gas Line	Rampart STA 45+50	Oct. 1, 2015	Gas Relocation
CenterPoint Gas	CPE 6" IP STL Gas Line	Rampart STA 49+02	Oct. 1, 2015	Gas Relocation

Utility Owner	Type of Facility	Approximate Location	Estimated Clearance Date	Anticipated Effect to Construction
CenterPoint Gas	CPE 4" IP STL Gas Line	Rampart STA 49+55	Oct. 1, 2015	Gas Relocation
CenterPoint Gas	CPE 2" IP STL Gas Line	Rampart STA 55+06	Oct. 1, 2015	Gas Relocation
CenterPoint Gas	CPE 2" IP STL Gas Line	Rampart STA 55+06	Oct. 1, 2015	Gas Relocation
CenterPoint Gas	CPE 2" IP STL Gas Line	Rampart STA 55+06	Oct. 1, 2015	Gas Relocation
CenterPoint Gas	CPE 2" IP STL Gas Line	Rampart STA 57+27	Oct. 1, 2015	Gas Relocation
CenterPoint Gas	CPE 2" IP STL Gas Line	Rampart STA 57+27	Oct. 1, 2015	Gas Relocation
CenterPoint Gas	CPE 2" IP STL Gas Line	Rampart STA 58+48	Oct. 1, 2015	Gas Relocation
CenterPoint Gas	CPE 2" IP STL Gas Line	Rampart STA 60+54	Oct. 1, 2015	Gas Relocation
CenterPoint Gas	CPE 2" IP STL Gas Line	Rampart STA 60+54	Oct. 1, 2015	Gas Relocation
CenterPoint Gas	CPE 2" IP STL Gas Line	Mullins STA 2+84	Oct. 1, 2015	Gas Relocation
CenterPoint Gas	CPE 2" IP STL Gas Line	Mullins STA 2+84	Oct. 1, 2015	Gas Relocation
CenterPoint Gas	CPE 2" IP STL Gas Line	Mullins STA 6+12	Oct. 1, 2015	Gas Relocation
CenterPoint Gas	CPE 2" IP STL Gas Line	Mullins STA 6+12	Oct. 1, 2015	Gas Relocation
CenterPoint Gas	CPE 2" IP STL Gas Line	Mullins STA 9+43	Oct. 1, 2015	Gas Relocation

Utility Owner	Type of Facility	Approximate Location	Estimated Clearance Date	Anticipated Effect to Construction
CenterPoint Gas	CPE 2" IP STL Gas Line	Mullins STA 9+43	Oct. 1, 2015	Gas Relocation
CenterPoint Gas	CPE 2" IP STL Gas Line	Evergreen STA 1+24	Oct. 1, 2015	Gas Relocation

The relocation of these facilities is not anticipated to interfere with the Contractors operations, but the Contractor shall develop the project construction schedule and bid accordingly. In the event that the clearance dates are deviated and proven to impact contractor's schedule, Contractor shall notify the construction project manager per Article 7 – Changes in the Work under Document 00700 General Conditions. The Contractor is invited to review all information of potential obstructions currently on file with the Engineer.

Throughout the project site, electrical and street light poles have been identified within the Right-of-Way. Contractor is to use caution when regrading the roadside ditches. If the street light conduits are impacted or damaged, the Contractor will be responsible for replacement at no cost to the City. Contractor is to coordinate with CenterPoint Energy, Street Lighting Design Section for the removal and replacement of any damaged street light conduits, including scheduling of inspection and transfer of services following installation, through Mr. Robert Tinnin, 4700 S. Shaver Bldg. I, Houston, Texas 77034, Tel: (713) 945-6242. A cash allowance is included for the removal and reinstallation of street light circuits, per the street lighting plan, under the cash allowance section. Please refer to the CPE Street Light Phasing Exhibit attached following Document 1110 – Summary of Work.

E. Outstanding Special Provisions - Right-of-Way Acquisitions, Encroachments, Permits, Etc.:

The City of Houston (City) has determined that the following pending conditions may apply to the completion of the proposed construction identified herein, and should be considered essential in completion of this project.

Right-of-Way Entry Permits for Driveway Construction

Plan Sheet No.	Driveway No.	Property Address	Property Owner	Date Authorized By Owner
29	23	6119 Jessamine St.	Rampart LLC	4/2/2015
41	56	6030 Dashwood Dr.	Charlie Nguyen Jr.	5/24/2015
41	59	6628 Rampart St.	Don C. & Helen Bryan	4/6/2015

Existing Encroachments within Right-of-Way

Sheet No.	Encroachment Type	Street Name	Address	Approx. Station	LT/ RT	PROPERTY OWNER
31	Existing Canopy near Driveway No. 30	Rampart Street	6110 JESSAMINE ST HOUSTON TX 77081 Tax ID: 0370620040070	36+58	LT	DONALSON CHARLES 3211 COLONY CREST CT HOUSTON, TX 77082-6804
35	Existing Canopy / Brick Walls	Rampart Street	6009 BELLAIRE BLVD HOUSTON TX 77081 Tax ID: 0370620040011	43+43	RT	HOUSTON 6009 BELLAIRE LLC P O BOX 1667 LINDEN, NJ 07036-0007
37	Existing Traffic Sensor in Driveway No. 48	Rampart Street	6009 BELLAIRE BLVD HOUSTON TX 77081 Tax ID: 0370620040011	47+36	RT	HOUSTON 6009 BELLAIRE LLC P O BOX 1667 LINDEN, NJ 07036-0007
41	Existing Canopy in Driveway No. 60	Rampart Street	6031 DE MOSS DR HOUSTON TX 77081 Tax ID: 0771470020016	58+19	RT	FRUGE GENIEVE 6031 DE MOSS DR HOUSTON, TX 77081-5007
43	Existing Canopy in Driveway No. 65	Rampart Street	6031 CLAREWOOD DR HOUSTON TX 77081 Tax ID: 0771470010016	61+00	RT	BENESTANTE SAM 6031 CLAREWOOD DR HOUSTON, TX 77081-5001
53	Existing Canopy in Driveway No. 83	Mullins Drive	5934 HORNWOOD DR HOUSTON TX 77081 Tax ID: 0831400000018	5+40	RT	VENTURI JUAN ERNESTO 5934 HORNWOOD DR HOUSTON, TX 77081-4303
53	Existing Canopy in Driveway No. 85	Mullins Drive	5935 MOONMIST DR HOUSTON TX 77081 Tax ID: 0831400000001	6+66	RT	OJEVICH, T 5935 MOONMIST DR HOUSTON, TX 77081-4308
55	Existing Canopy in Driveway No. 89	Mullins Drive	5935 HIGH STAR DR HOUSTON TX 77081 Tax ID: 0832320000001	9+88	RT	GATCHIK IVAN F GRUZINOV IRINA 5935 HIGH STAR DR HOUSTON, TX 77081-4322

The work does not impact existing encroachments. The Contractor is to work around these areas and protect existing developments, at no cost to the city.

1.07 STREET CUT ORDINANCE

A. Excavations on or under pavement in the City's right-of-way must have a permit. Comply with City of Houston, Texas Ordinance No. 2000-1115, an ordinance amending Chapter 40 of the Code of Ordinances, Houston, Texas, relating to excavating in the Public right-of-way.

B. Comply with the latest edition of street cut New Pavement Repair and Pavement Replacement details.

C. Quantities are included for street cut pavement repair and replacement in applicable Specification sections for Unit Price contracts.

D. Include payment for street cut pavement repair and replacement in lump sum bid for Stipulated Price contracts.

1.08 WARRANTY

A. Comply with warranty requirements in accordance with Document 00700 - General Conditions.

1.09 ADDITIONAL CONDITIONS FOR SUBSTANTIAL COMPLETION

A. In addition to requirements outlined in Document 00700 – General Conditions, for Contractor to be substantially complete with the work and call for inspection by Project Manager to confirm, the following conditions must be met or completed:

1. All pay items complete report.

2. All testing shall be completed and accepted by Project Manager.

3. All safety related work, including pavement striping, signing and permanent signalization, is complete and accepted by Project Manager.

4. All safety related systems and equipment shall be installed, accepted by manufacturer's representative (per Specification requirements) and approved for use.

5. Contractor shall contact Project Manager to complete Texas Department of Licensing and Regulation Post Construction

Inspection of pedestrian elements, such as sidewalks and wheelchair ramps, for Texas Accessibility Standards.

6. Traffic is operating in all lanes at all times, unless lane reductions are due to adjacent construction projects.

7. All services and utilities are operational.

PART 2 P R O D U C T S - Not Used

PART 3 E X E C U T I O N - Not Used

END OF SECTION

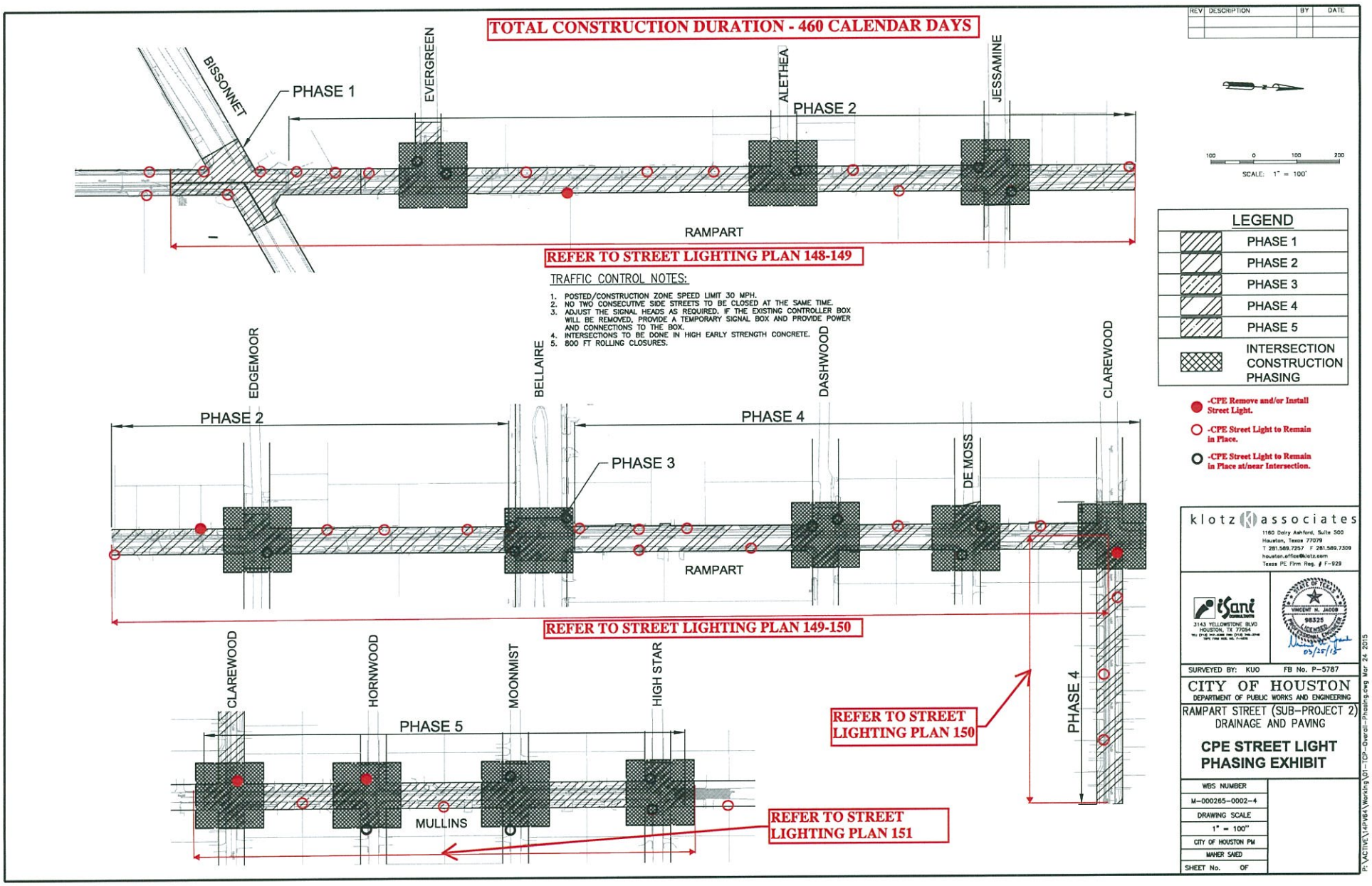

klotz associates
1160 Dairy Ashford, Suite 500
Houston, Texas 77079
T 281.589.7257 F 281.589.7309
houston.office@klotz.com
Texas PE Firm Reg. # F-929

iSani CONSULTANTS
3143 YELLOWSTONE BLVD
HOUSTON, TX 77054

STATE OF TEXAS VINCENT H. JACOB 98325 LICENSED PROFESSIONAL ENGINEER 03/25/15

SURVEYED BY: KUO FB No. P-5787

CITY OF HOUSTON
DEPARTMENT OF PUBLIC WORKS AND ENGINEERING

RAMPART STREET (SUB-PROJECT 2)
DRAINAGE AND PAVING

CPE STREET LIGHT PHASING EXHIBIT

WBS NUMBER	
M-000265-0002-4	
DRAWING SCALE	
1" = 100'	
CITY OF HOUSTON PM	
MAHER SAIED	
SHEET No. OF	

P:\ACTIVE\V4PW&K\Working\Qtl-TCP-Overall-Phasing.dwg Mar 24 2015

Section 01145

USE OF PREMISES

1.01 SECTION INCLUDES

A. General use of the site including properties inside and outside of rights-of-way, work affecting road, ramps, streets and driveways and notification to adjacent occupants.

1.02 RIGHTS-OF-WAY

A. Confine access, and operations and storage areas to rights-of-way provided by the City as stipulated in Document 00700 - General Conditions; trespassing on abutting lands or other lands in the area is not allowed.

B. Make arrangements, at no cost to the City, for temporary use of private properties. Contractor and Surety shall indemnify and hold harmless the City against claims or demands arising from such use of properties outside of rights-of-way. Submit a copy of agreements between private property owners and Contractor prior to use of the area. Agreements between private property owners and Contractor shall be notarized or bear the signatures of two witnesses.

C. Obtain written permission from City of Houston Parks and Recreation Department for storage of materials on esplanades and other areas within rights-of-way under that department's jurisdiction. Submit copies of written permission prior to use of the area.

D. Restrict total length of distributed materials along the route of construction to 1,000 linear feet unless otherwise approved in writing by City Engineer.

1.03 PROPERTIES OUTSIDE OF RIGHTS-OF-WAY

A. Do not alter the condition of properties adjacent to and along rights-of-way.

B. Do not use ways, means, methods, techniques, sequences, or procedures that result in damage to properties or improvements.

C. Restore damaged properties outside of rights-of-ways at no cost to the city

1.04 USE OF SITE

A. Obtain approvals from governing authorities prior to impeding or closing public roads and streets. Do not close more than two consecutive intersections at one time.

B. Notify Project Manager and Public Works and Engineering Traffic Management Branch at least five working days prior to closing a street or street crossing. Obtain permits for street closures in advance.

C. Maintain 10-foot-wide minimum access lanes for emergency vehicles including access to fire hydrants.

D. Avoid obstructing drainage ditches or inlets. When obstruction is unavoidable due to requirements of the Work, provide grading and temporary drainage structures to maintain unimpeded flow.

E. Locate and protect private lawn sprinkler systems that may exist within the site. Repair or replace damaged systems to condition existing at start of the Work, or better. Test irrigation system prior to construction.

F. Conform to daily clean-up requirements of Article 3 of Document 00700 - General Conditions.

G. Beware of overhead power lines existing in area and in close proximity of the Project. When 10 feet of clearance between energized overhead power line and construction-related activity cannot be maintained, request Center Point Energy (CPE) de-energize or move conflicting overhead power line. Contact CPE representatives at (713) 207-2222. Schedule, coordinate and pay costs associated with de-energizing or moving conflicting overhead power lines. When there is no separate pay item for this effort, include these costs in various items of bid that make such work necessary.

1.05 NOTIFICATION TO ADJACENT OCCUPANTS

A. Notify individual occupants in areas to be effected by the Work of proposed construction and time schedule. Notify not less than 72 hours or more than two weeks prior to work performed within 200 feet of homes or businesses. Follow form and content of sample door hanger provided by Project Manager.

B. Include in notification nature of the Work, and names and telephone numbers of two company representatives for resident contact available on 24-hour call.

C. Submit proposed notification to Project Manager for approval. Consider ethnicity of the neighborhood where English is not the dominant language. Provide notice in an understandable language.

1.06 PUBLIC, TEMPORARY, AND CONSTRUCTION ROADS AND RAMPS

A. Construct and maintain temporary detours, ramps, and roads to provide for normal public traffic flow when it is necessary to close public roads or streets.

B. Provide mats or other means to prevent overloading or damage to existing roadways from tracked equipment, large tandem axle trucks or equipment that will damage the existing roadway surfaces.

C. Construct and maintain access roads and parking areas as specified in Section 01504 - Temporary Facilities and Controls.

1.07 EXCAVATION IN STREETS AND DRIVEWAYS

A. Avoid hindering or inconveniencing public travel on streets or intersecting alleys for more than two blocks at any one time, except by permission of City Engineer.

B. Obtain Traffic Management Branch and City Engineer's approval when nature of the Work requires closure of an entire street. Permits required for street closure are Contractor's responsibility. Avoid unnecessary inconvenience to abutting property owners.

C. Remove surplus materials and debris and open each block for public use, as work in that block is complete.

D. Acceptance of any portion of the Work will not be based on return of street to public use.

E. Avoid obstructing driveways or entrances to private property.

F. Provide temporary crossings or complete excavation and backfill in one continuous operation to minimize duration of obstruction when excavation is required across drives or entrances.

G. Provide barricades and signs in accordance with Section VI of the State of Texas Manual on Uniform Traffic Control Devices.

1.08 TRAFFIC CONTROL

A. Comply with traffic regulation as specified in Section 01555 - Traffic Control and Regulation.

1.09 SURFACE RESTORATION

A. Restore the site including landscaping to the condition existing before construction, or better.

B. Repair paved areas per the requirements of Section 02951 - Pavement Repair and restoration.

C. Repair damaged turf areas, level with bank run sand conforming to Section 02317 - Excavation and Backfill for Utilities, or topsoil conforming to Section 02911 - Topsoil, and re-sod in accordance with Section 02922 - Sodding. Water and level newly sodded areas with adjoining turf using appropriate steel wheel rollers for sodding. Do not use spot sodding or sprigging.

1.10 LIMITS OF CONSTRUCTION

A. Confine operations to lands within construction work limits shown on Drawings. Unless otherwise noted on Drawings adhere to the following:

1. Where utility alignment is within esplanade, and construction limits are shown on Drawings to extend to edge of esplanade, keep equipment, materials, stockpiles a minimum of five feet from back of curb.

2. Where construction limits shown on Drawings extend to property line, keep sidewalks free of equipment, materials, and stockpiles.

1.11 EQUIPMENT AND MATERIAL SALVAGE

A. Upon completion of the Work, carefully remove salvageable equipment and material. Deliver them to City of Houston as directed by Project Manager. Dispose of equipment offsite at no additional cost to the City when Project Manager deems equipment unfit for further use.

PART 2 P R O D U C T S - Not Used

PART 3 E X E C U T I O N - Not Used

END OF SECTION

Section 01255

CHANGE ORDER PROCEDURES

PART 1 GENERAL

1.01 SECTION INCLUDES

A. Procedures for processing Change Orders, including:

1. Assignment of a responsible individual for approval and communication of changes in the Work;
2. Documentation of change in Contract Price and Contract Time;
3. Change procedures, using proposals and Modifications;
4. Execution of Change Orders;
5. Correlation of Contractor submittals.

1.02 REFERENCES

A. Blue Book is defined as the Rental Rate Blue Book for Construction Equipment (a.k.a. Data Quest Blue Book).

B. Rental Rate is defined as the full-unadjusted base rental rate for the appropriate item of construction equipment.

1.03 RESPONSIBLE INDIVIDUAL

A. Provide a letter indicating the name and address of the individual authorized to execute Modifications, and who will be responsible for informing others in Contractor's employ and Subcontractors of changes to the Work. Provide this information at the pre-construction meeting.

1.04 DOCUMENTATION OF CHANGE IN CONTRACT PRICE AND CONTRACT TIME

A. Maintain detailed records of changes in the Work. Provide full information required for identification and evaluation of proposed changes, and substantiate costs of changes in the Work.

B. Document each proposal for change in Contract Price or Contract Time with sufficient data to allow evaluation of proposal.

C. Include the following minimum information on proposals:

1. Quantities of items in original Document 00410 – Bid Form with additions, reductions, deletions, and substitutions.

2. Quantities and cost of items in original Schedule of Values with additions, reductions, deletions and substitutions.

3. Provide Unit Prices for new items, with supporting information, for inclusion in Schedule of Unit Price Work.

4. Justification for changes in Contract Time.

5. Additional data upon request.

D. For changes in the Work performed on a time-and-material basis, provide the following additional information:

1. Quantities and description of Products.

2. Taxes, insurance and Bonds.

3. Overhead and profit as noted in Document 00700 - General Conditions.

4. Dates, times and by who work was performed.

5. Time records and certified copies of applicable payrolls.

6. Invoices and receipts for Products, rental equipment, and subcontracts, similarly documented.

E. For changes in the Work performed on a time-and-materials basis, rental equipment is paid as follows:

1. Actual invoice cost for duration of time required to complete extra work without markup for overhead and profit. When extra work comprises only a portion of a rental invoice where equipment would otherwise be on site, compute hourly equipment rate by dividing the actual monthly invoice by 176. One day equals eight hours and one week equals 40 hours.

2. Do not exceed estimated operating costs given in Blue Book for items of equipment. Overhead and profit will be allowed on the operating cost.

F. For changes in the Work performed on a time-and-materials basis using Contractor-owned equipment, use Blue Book rates as follows:

1. Contractor-owned equipment will be paid at the Blue Book Rental Rate for the duration of time required to complete extra work without markup for overhead and profit. Utilize lowest cost combination of hourly, daily, weekly or monthly rates. Use 150 percent of Rental Rate for double shifts, one extra shift per day, and 200 percent of Rental Rate for more than two shifts per day. Standby rates shall be 50 percent of the appropriate Rental Rate shown in Blue Book. No other rate adjustments apply.

2. Do not exceed estimated operating costs given in Blue Book. Overhead and profit will be allowed on operating costs. Operating costs will not be allowed for equipment on standby.

1.05 CHANGE PROCEDURES

A. Changes to Contract Price or Contract Time can only be made by issuance of Document 00941 - Change Order. Issuance of Document 00940 - Work Change Directive will be formalized into a Change Order. Changes will be in accordance with requirements of Document 00700 - General Conditions.

B. City Engineer will advise of Minor Changes in the Work as authorized by the Document 00700 - General Conditions by issuing Document 00942 – Minor Change.

C. Request clarification of Drawings, Specifications, Contract documents or other information by using Document 00931- Request for Information. Response by Project Manager to Requests for Information does not authorize Contractor to perform tasks outside scope of the Work. Changes must be authorized as described in this Section.

1.06 PROPOSALS AND CONTRACT MODIFICATIONS

A. Project Manager may issue Document 00932- Request for Proposal, which includes a detailed description of the proposed change with supplementary or revised Drawings and Specifications. Project Manager may also request a proposal in response to a Request for Information. Prepare and submit the proposal within seven days or as specified in request.

B. Submit requests for Contract changes to City Engineer describing proposed change and its full effect on the Work, with a statement describing reason for change and effect on Contract Price and Contract Time including full documentation.

C. Design Consultant may review Change Orders.

1.07 WORK CHANGE DIRECTIVE

A. City Engineer may issue a signed Work Change Directive instructing Contractor to proceed with a change in the Work. Work Change Directive will subsequently be incorporated into a Change Order.

B. Work Change Directives will describe changes in the Work and designate the method of determining change in Contract Price or Contract Time.

C. Proceed promptly to execute changes in the Work in accordance with the Work Change Directive.

1.08 STIPULATED PRICE CHANGE ORDER

A. A Stipulated Price Change Order will be based on an accepted proposal.

1.09 UNIT PRICE CHANGE ORDER

A. Where Unit Prices for affected items of the Work are included in Document 00410 – Bid Form, the Change Order will be based on Unit Prices, subject to Articles 7 and 9 of Document 00700 - General Conditions.

B. Where Unit Prices of the Work are not pre-determined in Document 00410-Bid Form, the Work Change Directive or accepted proposal will specify the Unit Prices to be used.

1.10 TIME-AND-MATERIAL CHANGE ORDER

A. Provide itemized account and supporting data after completion of change, within time limits indicated for claims in Document 00700 - General Conditions.

B. City Engineer will determine the change allowable in Contract Price and Contract Time as provided in Document 00700 - General Conditions.

C. Maintain detailed records for work done on time-and-material basis as specified in Paragraph 1.04 above.

D. Provide full information required for evaluation of changes and substantiate costs for changes in the Work.

1.11 EXECUTION OF CHANGE DOCUMENTATION

A. City Engineer will issue Change Orders, Work Change Directives, or Minor Change in the Work for signatures of Parties as described in Document 00700 - General Conditions.

1.12 CORRELATION OF CONTRACTOR SUBMITTALS

A. For Stipulated Price Contracts, promptly revise Schedule of Values and Application for Payment forms to record authorized Change Orders as separate line item.

B. For Unit Price Contracts, the next monthly estimate of the Work after acceptance of a Change Order will be revised to include new items not previously included with appropriate Unit Prices.

C. Promptly revise progress schedules to reflect change in Contract Time, and to adjust time for other items of work affected by the change, and resubmit for review.

D. Promptly enter changes to on-site and record copies of Drawings, Specifications or Contract documents as required in Section 01785 - Project Record Documents.

PART 2 P R O D U C T S - Not Used

PART 3 E X E C U T I O N - Not Used

END OF SECTION

Section 01270

MEASUREMENT AND PAYMENT

PART 1 G E N E R A L

1.01 SECTION INCLUDES

A. Procedures for measurement and payment plus conditions for nonconformance assessment and nonpayment for rejected Products.

1.02 AUTHORITY

A. Measurement methods delineated in Specification sections are intended to complement criteria of this Section. In event of conflict, requirements of the Specification section shall govern.

B. Project Manager will take all measurements and compute quantities accordingly.

C. Assist by providing necessary equipment, workers, and survey personnel.

D. Measurement and Payment paragraphs are included only in those Specification sections of Division 01 where direct payment will be made. Include costs in the total bid price for those Specification sections in Division 01 that do not contain Measurement and Payment paragraphs,

1.03 UNIT QUANTITIES SPECIFIED

A. Quantity and measurement estimates stated in the Agreement are for contract purposes only. Quantities and measurements supplied or placed in the Work and verified by Project Manager will determine payment as stated in Article 9 of Document 00700 - General Conditions.

B. When actual work requires greater or lesser quantities than those quantities indicated in Document 00410 – Bid Form, provide required quantities at Unit Prices contracted, except as otherwise stated in Article 9 of Document 00700 - General Conditions.

1.04 MEASUREMENT OF QUANTITIES

A. Measurement by Weight: Reinforcing steel, rolled or formed steel or other metal shapes are measured by CRSI or AISC Manual of Steel Construction weights. Welded assemblies are measured by CRSI or AISC Manual of Steel Construction or scale weights.

B. Measurement by Volume:

1. Stockpiles: Measured by cubic dimension using mean length, width, and height or thickness.

2. Excavation and Embankment Materials: Measured by cubic dimension using average end area method.

C. Measurement by Area: Measured by square dimension using mean length and width or radius.

D. Linear Measurement: Measured by linear dimension, at item centerline or mean chord.

E. Stipulated Price Measurement: By unit designated in the Agreement.

F. Other: Items measured by weight, volume, area, or linear means or combination, as appropriate, as completed item or unit of the Work.

G. Measurement by Each: Measured by each instance or item provided.

H. Measurement by Lump Sum: Measure includes all associated work.

.05 PAYMENT

A. Payment includes full compensation for all required supervision, labor, Products, tools, equipment, plant, transportation, services, and incidentals; and erection, application or Installation of an item of the Work; and Contractor's overhead and profit.

B. Total compensation for required Unit Price work shall be included in Unit Price bid in Document 00410 – Bid Form. Claims for payment as Unit Price work, but not specifically covered in the list of Unit Prices contained in Document 00410 – Bid Form, will not be accepted.

C. Interim payments for stored materials will be made only for materials to be incorporated under items covered in Unit Prices, unless disallowed in Document 00800 - Supplementary Conditions.

D. Progress payments will be based on Project Manager's observations and evaluations of quantities incorporated in the Work multiplied by Unit Price.

E. Final payment for work governed by Unit Prices will be made on the basis of actual measurements and quantities determined by Project Manager multiplied by the Unit Price for work which is incorporated in or made necessary by the Work.

1.06 NONCONFORMANCE ASSESSMENT

A. Remove and replace work, or portions of the Work, not conforming to the Contract documents.

B. When not practical to remove and replace work, City Engineer will direct one of the following remedies:

1. Nonconforming work will remain as is, but Unit Price will be adjusted lower at discretion of City Engineer.

2. Nonconforming work will be modified as authorized by City Engineer, and the Unit Price will be adjusted lower at the discretion of City Engineer, when modified work is deemed less suitable than specified.

C. Specification sections may modify the above remedies or may identify a specific formula or percentage price reduction.

D. Authority of City Engineer to assess nonconforming work and identify payment adjustment is final.

1.07 NONPAYMENT FOR REJECTED PRODUCTS

A. Payment will not be made for any of the following:

1. Products wasted or disposed of in an unacceptable manner.

2. Products determined as nonconforming before or after placement.

3. Products not completely unloaded from transporting vehicles.

4. Products placed beyond lines and levels of required work.

5. Products remaining on hand after completion of the Work, unless specified otherwise.

6. Loading, hauling, and disposing of rejected Products.

PART 2 P R O D U C T S - Not Used

PART 3 E X E C U T I O N - Not Used

END OF SECTION

Section 01292

SCHEDULE OF VALUES

PART 1 G E N E R A L

1.01 SECTION INCLUDES

A. Preparation and submittal of Schedule of Values for Stipulated Price Contracts or for Major Unit Price Work on Unit Price Contracts.

1.02 PREPARATION

A. For Stipulated Price Contracts, subdivide the Schedule of Values into logical portions of the Work, such as major work items or work in contiguous construction areas. Use Section 01325 - Construction Schedule as a guide to subdivision of work items. Directly correlate Items in the Schedule of Values with tasks in the Construction Schedule. Organize each portion using the Project Manual Table of Contents as an outline for listing value of the Work by Sections. A pro rata share of mobilization, Bonds, and insurance may be listed as separate items for each portion of the Work.

B. For Unit Price Contracts, items should include a proportional share of Contractor's overhead and profit so that total of all items will equal Contract Price.

C. For lump sum equipment items, where submittal of operation and maintenance data and testing are required, include separate items for equipment operation and maintenance data where:

1. submittal of maintenance data is valued at five percent of the lump sum amount for each equipment item and

2. submittal for testing and adjusting is valued at five percent of the lump sum amount for each equipment item.

Round off figures for each item listed to the nearest $100. Set the value of one item, when necessary, to make total of all values equal the Contract Price for Stipulated Price Contracts or the lump sum amount for Unit Price Work.

1.03 SUBMITTAL

A. Submit the Schedule of Values, in accordance with requirements of Section 01330 - Submittal Procedures, at least 10 days prior to processing of the first Certificate for Payment.

B Submit the Schedule of Values in an approved electronic spreadsheet file and an 81/2-inch by 11-inch print on white bond paper.

C. Revise Schedule of Values for items affected by Contract Modifications. After City Engineer has reviewed changes, resubmit at least 10 days prior to the next scheduled Certificate for Payment date.

PART 2 P R O D U C T S - Not Used

PART 3 E X E C U T I O N - Not Used

END OF SECTION

Section 01312

COORDINATION AND MEETINGS

PART 1 GENERAL

1.01 SECTION INCLUDES

A. General coordination including pre-construction meeting, site mobilization conference, and progress meetings.

1.02 COORDINATION OF DOCUMENTS

A. Coordination is required throughout documents. Refer to Contract documents and coordinate as necessary.

1.03 CONTRACTOR COORDINATION

A. Coordinate scheduling, submittals, and work of various Specification sections to assure efficient and orderly sequence of Installation of interdependent construction elements.

B. Coordinate completion and clean up of the Work prior to the Date of Substantial Completion and for portions of the Work designated for City's partial occupancy.

C. Coordinate access to the site for correction of nonconforming work to minimize disruption of the City's activities where the City is in partial occupancy.

1.04 PRE-CONSTRUCTION MEETING

A. Project Manager will schedule pre-construction meeting.

B. Attendance Required: City representatives, Design Consultant, special consultants as required by Project Manager, Contractor, and major Subcontractors and Suppliers.

C. Agenda:

1. Distribution of Contract documents.

2. Designation of personnel representing the Parties and Design Consultant.

3. Review of insurance.

4. Discussion of formats for Schedule of Values and Construction Schedule.

5. Procedures and processing of Shop Drawings, substitutions, pay estimates or Applications for Payment, Requests for Information, Requests for Proposal, Modifications, and the Contract closeout, other submittals.

6. Scheduling of the Work and coordination with other contractors.

7. Review of Subcontractors and Suppliers.

8. Appropriate agenda items listed for the site mobilization conference, Paragraph 1.05.C, when pre-construction meeting and site mobilization conference are combined.

9. Procedures for testing.

10. Procedures for maintaining record documents.

1.05 SITE MOBILIZATION CONFERENCE

A. When required by Contract documents, Project Manager will schedule a conference at the Project site prior to Contractor mobilization.

B. Attendance Required: City representatives, Design Consultant, special consultants, Superintendent, and major Subcontractors.

C. Agenda:

1. Use of premises by the City and Contractor.

2. Safety and first aid procedures.

3. Construction controls provided by the City.

4. Temporary utilities.

5. Survey and layout.

6. Security and housekeeping procedures.

7. Field office requirements.

1.06 PROGRESS MEETINGS

A. Hold meetings at Project field office or other location designated by Project Manager. Hold meetings at monthly intervals, or more frequently when directed by Project Manager.

B. Attendance Required: Superintendent, major Subcontractors and Suppliers, City representatives, Design Consultant and its subconsultants as appropriate for agenda topics for each meeting.

C. Project Manager will make arrangements for meetings, and for recording minutes.

D. Project Manager will prepare the agenda and preside at meetings.

E. Provide required information and be prepared to discuss each agenda item.

F. Agenda:

1. Review minutes of previous meetings.
2. Review of construction schedule, pay estimates, cash flow curve, payroll and compliance submittals.
3. Field observations, problems, and necessary decisions.
4. Identification of problems that impede planned progress.
5. Review of submittal schedule and status of submittals.
6. Review of RFI and RFP status.
7. Modification status.
8. Review of off-site fabrication and delivery schedules.
9. Maintenance of Construction Schedule.
10. Corrective measures to regain Construction Schedule.
11. Planned progress during the succeeding work period.
12. Coordination of projected progress.
13. Maintenance of quality and work standards.

14. Effect of proposed Modifications on Construction Schedule and coordination.

15. Review Project Record Contract Drawings.

16. Other item relating to the Work.

PART 2 P R O D U C T S - Not Used

PART 3 E X E C U T I O N - Not Used

END OF SECTION

Section 01321

CONSTRUCTION PHOTOGRAPHS

PART 1 GENERAL

1.01 SECTION INCLUDES

A. Photographic requirements for construction photographs and submittals.

1.02 DEFINITIONS

A. Pre-construction Photographs: Photographs taken, in sufficient numbers and detail, prior to Date of Commencement of the Work, to show original construction site conditions.

B. Progress Photographs: Photographs, taken throughout the duration of construction at regular intervals and from fixed vantage points, pre-approved by the City, that document progress of the Work.

C. Finished Photographs: Photographs, taken by a professional photographer near Date of Substantial Completion and before City Council's acceptance of the Work, that are suitable for framing and for use in brochures or on the Internet

1.03 SUBMITTALS

A. Refer to Section 01330, Submittal Procedures, for submittal requirements.

B. Format and Media. Film or digital photography may be used. Submit color photographs, unless otherwise specified.

1. Prints. Submit each Progress or Pre-construction Photograph print in a three-hole plastic pocket or sleeve, bound in a three-ring notebook. Produce prints on photographic-quality paper approved by Project Manager. Minimum size for Pre-construction Photograph prints shall be 3-inches by 5-inches. Progress Photograph prints shall be 8-inches by 10-inches.

2. Film. Use 35mm or larger color film. Submit negatives used to make submitted photographs, in 3-hole 8-1/2 inch by 11-inch plastic sheets with sleeves for negatives.

3. Digital Photography. Use 2.1 megapixel density or greater for photographs. Scanned photographs must equal or exceed 400 dots

per inch when scanned from 8-inch by 10-inch prints. Submit digital photographic files on computer disks. Format disks for MS-DOS (Microsoft Disk Operating System) filing system and in JPEG (Joint Photographic Experts Group) format.

C. Submittal Quantities and Frequencies.

1. Pre-construction Photographs:
   a. For Stipulated Price Contracts, submit two sets of Pre-construction Photographs, if required, prior to first Application for Payment.
   b. For Unit Price Contracts, submit two sets of Pre-construction Photographs prior to start of construction operations.

2. Progress Photographs:
   a. For Stipulated Price Contracts, submit three sets of Progress Photographs with each Application for Payment at the times established for submittal of Applications for Payment. Monthly Applications for Payment shall be deemed incomplete if not accompanied by the required Progress Photographs. Contractor's failure or election to not submit a monthly Application for Payment shall not affect the requirement for monthly Progress Photographs.
   b. Progress Photographs are not required for Unit Price Contracts unless otherwise specified.

3. Finished Photographs: For Stipulated Price Contracts submit two sets of Finished Photographs, if required, after Date of Substantial Completion and prior to final payment. Each set shall contain one 11-inch by 14-inch matte finish color photographic print from each of the two vantage points pre-approved by the City. Vantage points for Finished Photographs will be approved separately from vantage points approved for Progress Photographs. Finished Photographs are not required for Unit Price Contracts unless otherwise specified.

D. Labeling. Place a label on the back of each photographic print, applied so as to not to show through on the front. Labels shall contain the following information:

1. Name of Project, address of Project and GFS Number.

2. Name and address of Contractor.

3. Date photograph was taken.

4. Location photo was taken from and short description of photo subject.

5. Name and address of professional photographer who took the photograph, if applicable.

E. Hand-deliver or transmit prints in standard photographic mailers marked "Photographs - Do Not Bend".

F. Photographic prints, negatives, photographic files and disks become the property of the City. Do not be publish photographs without written consent by the City.

1.04 QUALITY ASSURANCE

A. Contractor shall be responsible for the quality of and timely execution and submittal of photographs.

B. For Finished Photographs, Contractor shall use a professional photographer, with five years minimum professional experience in the Houston area. Contractor shall submit name, address and credentials of professional photographer for Project Manager's review and approval.

PART 2 PRODUCTS - Not Used

PART 3 EXECUTION

3.01 PRE-CONSTRUCTION PHOTOGRAPHS

A. Prior to commencement of construction operations, photograph the site to include initial construction corridor, detour routes, and staging or storage areas.

1. For Stipulated Price Contracts, unless specified as a requirement in other Sections, these photographs are optional for Contractor, but are highly recommended for areas bounded by other property owners.

2. Pre-construction photographs are required for Unit Price Contracts. For line projects with scheduled construction segments, take Pre-construction Photographs prior to commencement of work on each segment.

B. Prepare Pre-construction Photographs as follows:

1. Show the following information on a non-reflective chalkboard placed within the picture frame:
   a. Job number.
   b. Project Number.
   c. Date and time photographs were taken (Automatic date/time in negative is acceptable).
   d. Baseline station, direction of view (i.e. N, S, NW, etc.) and house number or street address and street name.

2. Pre-construction Photographs shall indicate condition of the following:
   a. Esplanades and boulevards.
   b. Yards (near side and far side of street).
   c. House walks and sidewalks.
   d. Curbs.
   e. Areas between walks and curbs.
   f. Particular features (e.g. yard lights, shrubs, fences, trees).

3. Show date photographs were taken on negatives.

C. Show the location of vantage points and direction of shots on a key plan of the site.

3.02 PROGRESS PHOTOGRAPHS

A. Progress Photographs document monthly advancement of the Work. Select vantage points for each shot so as to best show status of construction and progress since last photograph submittal. Select camera stations that will require little or no movement or adjustment over the duration of construction.

B. Take monthly Progress Photographs at regular intervals to coincide with cutoff dates associated with each Application for Payment.

3.03 FINISHED PHOTOGRAPHS

A. Finished Photographs shall be "staged" and taken by a professional photographer to depict the most flattering images of a finished facility. Two vantage points, from which Finished Photographs will be taken, shall be agreed to in advance by the City. Photographer shall consider lighting, time of day, height of eye, landscaping and placement of vehicles, people and other props in each picture. Filters and post-photography processing may be utilized to achieve a finished product acceptable to the City.

3.04 LOCATION

A. Vantage points, times and conditions for camera stations and photography for Progress and Finished Photographs shall be mutually agreed upon by the City, Contractor and Photographer. Progress Photograph vantage points may be changed by mutual agreement as the Work progresses, at no additional cost to the City.

END OF SECTION

Section 01325

CONSTRUCTION SCHEDULE

PART 1 GENERAL

1.01 GENERAL

A. Provide Construction Schedules for the Work included in this Contract in accordance with requirements in this Section. Create Construction Schedule using Critical Path Method (CPM) computer software capable of mathematical analysis of Precedence Diagramming Method (PDM) plan. Provide printed activity listings and bar charts in formats described in this Section.

B. Combine activity listings and bar charts with narrative report to form Construction Schedule submittal for Project Manager.

1.02 SCHEDULING STAFF

A. Employ or retain services of individual experienced in CPM scheduling for duration of the Contract. Individual shall cooperate with Project Manager and update schedule monthly as required to indicate current status of the Work.

1.03 SUBMITTALS

A. Conform to requirements of Section 01330 - Submittal Procedures.

B. During preconstruction meeting, as described in Section 01312 - Coordination and Meetings, provide sample bar charts and activity listings produced from scheduling software proposed. Scheduling software is subject to review by Project Manager and must meet requirements provided in this Section. Project Manager will provide review of samples within seven days of submittal.

C. Within 21 days of receipt of approval of Contractor's format, or 30 days of Notice to Proceed, whichever is later, submit proposed Construction Schedule for review. Base Construction Schedule submittal on the following:

1. Level of detail and number of activities required in schedule are dependent on project type.
   a. For wastewater projects, categorize work type and area code in schedule.
      1) For wastewater rehabilitation projects, there are six work type categories. An area code will be assigned for each

Meter Service Area or Basin. Include at least one activity for each unique combination of work type and area code. Normal schedules of wastewater rehabilitation projects contain between 35 and 100 activities, depending on number of basins and work types involved in each basin.

2) For wastewater relief projects (line work), area codes will be assigned geographically.

3) For wastewater plant or facility work, other criteria may apply to assignment of area codes, such as a combination of geographical and craft categories.

b. For projects with multiple types of tasks within scope, indicate types of work separately within schedule.

c. For projects with work at different physical locations or service areas, or different facilities within a site, indicate each location or facility separately within schedule. Show work on each floor of multi-story building as separate tasks.

d. For projects with multiple crafts or significant Subcontractor components, indicate elements separately within schedule. Unless permitted by Project Manager, tasks shall consist of work covered by only one division of Project Manual.

2. Unless permitted by Project Manager, each scheduled task shall be same as Schedule of Values line item, and vice versa.

3. For projects with Major Unit Price Work, indicate Shop Drawing submittal and review, purchase, delivery, and Installation dates on Project schedule. Include activities for testing, adjustment, and delivering O&M manuals.

4. No task except the acquisition of Major Unit Price Work shall represent more than one percent of Original Contract Price for facility projects and three percent of Original Contract Price for other projects. Duration of tasks may not exceed 40 calendar days.

5. For projects where operating facilities are involved, identify each period of work that will impact any process or operation in the schedule and that must be agreed to by Project Manager and facility operator prior to starting work in the area.

D. Construction Schedule submittals shall include:

1. printed bar charts that meet criteria outlined in this Section and are produced by Contractor's approved scheduling software;

2. activity listings that meet criteria outlined in this Section and are produced by Contractor's approved scheduling software; and

3. a predecessor/successor listing sorted by Activity ID that meets criteria outlined in this Section and is produced by Contractor's scheduling software.

4. A logic network diagram is required with the first Construction Schedule submittal for facilities projects.

5. Prepare and submit graphic or tabular display of estimated monthly billings (i.e. a cash flow curve for the Work) with the first schedule submittal. This information is not required in monthly updates, unless significant changes in work require re-submittal of schedule for review. Display shall allocate units indicated in bid schedule or Schedule of Values to Construction Schedule activities. Weighted allocations are acceptable, where appropriate. Dollar value associated with each allocated unit will be spread across the duration of that activity on a monthly basis. Total for each month and cumulative total will be indicated. These monthly forecasts are only for Project Manager's planning purposes. Monthly payments for actual work completed will be made in accordance with Document 00700 - General Conditions.

6. Narrative Report that provides the information outlined in this Section.

E. No payment will be made until Project Manager approves Construction Schedule and billing forecast.

F. If Contractor desires to make changes in its method of operating and scheduling, after Project Manager has reviewed original schedule, notify Project Manager in writing, stating reasons for changes. When Project Manager considers these changes to be significant, Contractor may be required to revise and resubmit for review all or affected portion of Contractor's Construction Schedule to show effect on the Work.

G. Upon written request from Project Manager, revise and submit for review all or any part of Construction Schedule submittal to reflect changed conditions in the Work or deviations made from original schedule.

H. Updated Construction Schedule with actual start and actual finish dates, percent complete, and remaining duration of each activity shall be submitted monthly. Data date used in updating monthly Construction Schedule shall be the same date as used in monthly Payment Application. Monthly update of Construction Schedule is required for monthly Payment Application to be processed for payment.

)4 SCHEDULING COMPUTER SOFTWARE REQUIREMENTS

A. Contractor's scheduling software shall be capable of creating bar charts and activity listings, which can be sorted by various fields (i.e. Activity ID, Early Start, Total Float, Area Code, Specification Section number, and Subcontractor). Use software capable of producing logic network diagram.

B. Use scheduling software capable of producing activity listings and bar charts with the following information for each activity in the schedule:

1. Activity ID
2. Activity Description
3. Estimated (Original) Duration
4. Remaining Duration
5. Actual Duration
6. Early Start Date
7. Late Start Date
8. Early Finish Date
9. Late Finish Date
10. Free Float
11. Total Float
12. Activity Codes (such as Area Code, Work Type, Specification Section, Subcontractor)

C. Use scheduling software capable of printing calendars using mathematical analysis of schedule, indicating standard workdays of week and scheduled holidays.

D. Use scheduling software capable of printing activity listing that indicates predecessors and successors, lag factors and lag relationships used in creating logic of the schedule.

E. Use scheduling software to provide monthly time in Bar Chart format and scale with 12-month scale not to exceed one page width. Bar charts may be

printed or plotted on 8-1/2 by 11-inch, 8-1/2 by 14-inch or 11 by 17-inch she sizes. Over-size plots are not acceptable.

1.05 NARRATIVE SCHEDULE REPORT

A. Narrative schedule report shall list activities started this month, activities completed this month, activities continued this month, activities scheduled to start or complete next month, problems encountered this month, and actions taken to solve these problems.

B. Narrative schedule report shall describe changes made to Construction Schedule logic (i.e. changes in predecessors and lags), activities added to schedule, activities deleted from schedule, any other changes made to the schedule other than addition of actual start dates and actual finish dates and changes of data date and remaining durations for re-calculation of mathematical analysis.

PART 2 P R O D U C T S - Not Used

PART 3 E X E C U T I O N - Not Used

END OF SECTION

Section 01326

CONSTRUCTION SCHEDULE (BAR CHART)

PART 1 G E N E R A L

1.01 SECTION INCLUDES

A. Provide an initial Construction Schedule as required by this section for the Work. Do not start construction until Project Manager reviews the schedule.

1.02 FORM AND CONTENT OF INITIAL CONSTRUCTION SCHEDULE

A. Bar Chart:

1. Show major construction activities such as pipe laying, by traffic control phases or other approved key areas; tunnel construction, pavement removal, pavement replacement, pressure testing, chlorination, clean up and punch list as separate activities on the schedule.

2. Show week duration for each activity.

3. Show separate activities for each Shop Drawing and Product Data submittal critical to timely completion. Show submittal dates and dates Project Manager needs to provide approved submittals.

4. Provide separate horizontal bar for each activity. List start and finish date for each activity at left side of diagram.

5. Horizontal Time Scale: Identify first work day of each week.

6. Scale and Spacing: Notes must be legible. Allow space for notations and future revisions.

7. Order of Listings: Order bar chart listings by phases or other approved groups of activities that are contiguous. List activities in chronological order within each phase or group.

B. Narrative Description:

1. Submit narrative descriptions of anticipated work sequences as indicated by the sequence of activities presented in the schedule.

2. Discuss any activity that affects the public (such as phases of traffic control), interaction with specific forces of the City (such as valve operation, chlorination and testing) or other associated contractors.

1.03 PROGRESS REVISIONS

A. Submit progress revisions or necessary information to complete and process Payment Applications. When required, re-submittals for rejected revisions must be submitted and reviewed prior to the following month's processing of a Payment Application. The following month's Payment Application will not be processed until the re-submittal is reviewed and required progress revisions are received.

B. Provide a narrative report to describe:

1. Major changes in scope.

2. Revised projections in progress, completion, or changes in activity duration.

3. Other identifiable changes.

4. Problem areas, anticipated delays, and the impact on schedule.

5. Corrective action recommended and its effect.

6. Effect of changes on schedules or other contractors.

7. Product delivery lead times.

C. Include additional data with Bar Chart described in Paragraph 1.03A of this Section:

1. Show original dates for each activity in the approved initial progress schedule by narrow bar next to a wider bar for the current schedule.

2. Show date each activity actually started or finished when an event has occurred. Clearly identify actual dates in two right-most columns in left portion of an 11 by 17-inch chart.

3. Indicate the percentage progress to the date of submittal for each activity.

1.04 SUBMITTALS

A. Submit the initial progress schedule within 15 days after award of contract. Project Manager will review the schedule and return a reviewed copy within 21 days after receipt.

B. Cut-off dates for progress revisions may be as early as the 20th of the month to avoid delaying processing of Payment Applications. Use the cut-off date for the first approved revision for further revisions.

C. When required, re-submit within seven days after return of review copy.

D. Include connecting lines between bars in the schedule to indicate the sequence that activities will be accomplished. Connecting lines when the activity's start or finish is modified will identify impact of preceding or succeeding activities. Submit a minimum of six copies of the bar chart on 11 by 17-inch opaque reproductions. Project Manager will retain five copies and return the remaining copy.

PART 2 P R O D U C T S - Not Used

PART 3 E X E C U T I O N - Not Used

END OF SECTION

Section 01330

SUBMITTAL PROCEDURES

PART 1 G E N E R A L

1.01 SECTION INCLUDES

A. Submittal procedures for:

1. Schedule of Values
2. Construction Schedules and Cash Flow Curve (billing forecast).
3. Shop Drawings, Product Data and Samples
4. Operations and Maintenance (O&M) Data
5. Manufacturer's Certificates
6. Construction Photographs
7. Project Record Documents and monthly certification.
8. Video Tapes
9. Design Mixes

1.02 SUBMITTAL PROCEDURES

A. Scheduling and Handling:

1. Submit Shop Drawings, data and Samples for related components as required by Specifications and Project Manager.
2. Schedule submittals well in advance of need for construction Products. Allow time for delivery of Products after submittal approval.
3. Develop submittal schedule that allows sufficient time for initial review, correction, resubmission and final review of all submittals. Allow a minimum of 30 days for initial review. Project Manager will review and return submittals to Contractor as expeditiously as possible but time required for review will vary depending on complexity and quantity of data submitted.

4. Project Manager's review of submittals covers only general conformity to Drawings, Specifications and dimensions that affect layout. Contractor is responsible for quantity determination. No quantities will be verified by Project Manager. Contractor is responsible for errors, omissions or deviations from Contract requirements; review of submittals does not relieve Contractor from the obligation to furnish required items in accordance with Drawings and Specifications.

5. Submit five copies of documents unless otherwise specified.

6. Revise and resubmit submittals as required. Identify all changes made since previous submittal.

7. Assume risk for fabricated Products delivered prior to approval. Do not incorporate Products into the Work, or include payment for Products in periodic progress payments, until approved by Project Manager.

B. Transmittal Form and Numbering:

1. Transmit each submittal to Project Manager with Transmittal letter which includes:
   a. Date and submittal number
   b. Project title and number
   c. Names of Contractor, Subcontractor, Supplier and manufacturer
   d. Identification of Product being supplied
   e. Location of where Product is to be Installed
   f. Applicable Specification section number

2. Identify deviations from Contract documents clouding submittal drawings. Itemize and detail on separate 8-1/2 by 11-inch sheets entitled "DEVIATIONS FOR _____." When no deviations exist, submit a sheet stating no deviations exist.

3. Have design deviations signed and sealed by an appropriate design professional, registered in the State of Texas.

4. Sequentially number transmittal letters beginning with number one. Use original number for resubmittals with an alphabetic suffix (i.e., 2A for the first resubmittal of submittal 2, or 15C for third resubmittal of submittal 15, etc.). Show only one type of work or Product on each submittal. Mixed submittals will not be accepted.

C. Contractor's Stamp:

1. Apply Contractor's Stamp certifying that the items have been reviewed in detail by Contractor and that they comply with Contract requirements, except as noted by requested variances.

2. As a minimum, Contractor's Stamp shall include:
   a. Contractor's name
   b. Job number
   c. Submittal number
   d. Certification statement Contractor has reviewed submittal and it is in compliance with the Contract
   e. Signature line for Contractor

D. Submittals will be returned with one of the following Responses:

1. "ACKNOWLEDGE RECEIPT" when no response and resubmittal is required.

2. "NO EXCEPTION" when sufficient information has supplied to determine that item described is accepted and that no resubmittal is required.

3. "EXCEPTIONS AS NOTED" when sufficient information has been supplied to determine that item will be acceptable subject to changes, or exceptions, which will be clearly stated. When exceptions require additional changes, the changes must be submitted for approval. Resubmittal is not required when exceptions require no further changes.

4. "REJECTED-RESUBMIT" when submittal does not contain sufficient information, or when information provided does not meet Contract requirements. Additional data or details requested by Project Manager must be submitted to obtain approval.

1.03 MANUFACTURER'S CERTIFICATES

A. When required by Specification sections, submit manufacturers' certificate of compliance for review by Project Manager.

B. Place Contractor's Stamp on front of certification.

C. Submit supporting reference data, affidavits, and certifications as appropriate.

D. Product certificates may be recent or from previous test results, but must be acceptable to Project Manager.

1.04 DESIGN MIXES

A. When required by Specification sections, submit design mixes for review.

B. Place Contractor's Stamp, as specified in this section, on the front of each design mix.

C. Mark each mix to identify proportions, gradations, and additives for each class and type of mix submitted. Include applicable test results from samples for each mix. Perform tests and certifications within 12 months of the date of the submittal.

D. Maintain copies of approved mixes at mixing plant.

1.05 CHANGES TO CONTRACT

A. Changes to Contract may be initiated by completing a Request for Information form. Project Manager will provide a response to Contractor by completing the form and returning it to Contractor.

1. If Contractor agrees that the response will result in no increase in cost or time, a Minor Change in the Work will be issued by City Engineer.

2. If Contractor and Project Manager agree that an increase in time or cost is warranted, Project Manager will forward the Request for Proposal for negotiation of a Change Order.

PART 2 P R O D U C T S - Not Used

PART 3 E X E C U T I O N - Not Used

END OF SECTION

Section 01340

SHOP DRAWINGS, PRODUCT DATA, AND SAMPLES

PART 1 GENERAL

1.01 SECTION INCLUDES

A. Methods, schedules, and processes to be followed for Shop Drawings, Product Data and Sample submittals.

1.02 REQUIREMENT

A. Submit Shop Drawings, Product Data and Samples as required by Document 00700 - General Conditions and Specification sections, using procedures specified in Section 01330 - Submittal Procedures and the requirements of this Section.

B. Shop Drawings, Product Data and Samples are not considered Contract documents.

1.03 SHOP DRAWING/SUBMITTAL SCHEDULE

A. Submit a separate Shop Drawing submittal schedule at same time the Construction Schedule is submitted. List Products for which Shop Drawings and other submittals are required in the order that they appear in Specifications. Include Product Data and Sample submittals in the schedule. Payment Applications or Certificates for Payment will not be processed until Project Manager has approved the Shop Drawing submittal schedule.

1.04 SHOP DRAWINGS

A. Submit a minimum of seven sets of Shop Drawings and Product Data in a form and quality suitable for microfilming. Review and sign Shop Drawings indicating compliance with the Contract.

B. Place Contractor's Stamp on each drawing as described in Section 01330 - Submittal Procedures.

C. Show the following accurately and distinctly:

1. Field and erection dimensions;

2. Arrangement and section views;

3. Relation to adjacent materials or structure, including complete information for making connections between the Work and work under other contracts;

4. Types of Products and finishes;

5. Parts list and descriptions;

6. Assembly drawings of equipment components and accessories showing respective positions and relationships to the complete equipment package;

7. Identify details by referencing drawing sheet and detail numbers, schedule or room numbers as shown on the Contract drawings, where necessary for clarity.

D. Scale drawings to provide a true representation of the specific equipment or item Furnished.

E. Coordinate and submit components, necessary for Project Manager to adequately review submittal, as a complete package. Reproduction of the Drawings for use in Shop Drawings is not allowed.

F. For major changes to original documents, submit Computer-Aided Design (CAD) drawings on a media acceptable to Project Manager.

1.05 PRODUCT DATA

A. Submit Product Data for review as required in Specifications.

B. Place Contractor's stamp, on each data item submitted, as described in Section 01330 - Submittal Procedures.

C. Mark each copy to identify applicable Products, models, and options to be used in the Work. Where required by Specifications, supplement manufacturers' standard data to provide information unique to the Work.

D. Give manufacturers, trade name, model or catalog designation and applicable reference standard for Products specified only by reference standards.

E. Pre-approved and Pre-qualified Products.

1. For "pre-approved", "pre-qualified" and "approved" Products named in the City standard products list, provide an appropriate list designation,

as described in Section 01630 - Product Substitution Procedures, within 30 days after Notice to Proceed.

2. For Products proposed as alternates to "approved" products, provide information required to demonstrate that the proposed Products meet the level of quality and performance criteria of the "approved" product.

1.06 SAMPLES

A. Submit Samples for review as required by Specifications. Have Samples reviewed and signed by a Registered Professional.

B. Place Contractor's stamp on each Sample or firmly attach a sheet of paper with Contractor's stamp, as described in Section 01330 - Submittal Procedures.

C. Submit the number of Samples specified in Specifications; Project Manager will retain one.

D. Reviewed Samples that may be used in the Work are identified in Specifications.

PART 2 P R O D U C T S - Not Used

PART 3 E X E C U T I O N - Not Used

END OF SECTION

SECTION 01351

ENVIRONMENTAL SAFETY AND WORKER PROTECTION

PART 1 GENERAL

1.01 SECTION INCLUDES

Environmental Safety and Worker Protection including monitoring emissions and exposure to workers and providing an appropriate response. The role of the Certified Industrial Hygienist (CIH) is also defined.

1.02 MEASUREMENT AND PAYMENT

No separate measurement and payment for work performed under this Section. The Contractor shall include the cost for this work in the contract bid price for work of which this is a component part.

1.03 REFERENCES

The following is a list of applicable requirements to this project. It is not intended to be a complete listing of all laws and regulations to which the Contractor must comply.

A. Code of Federal Regulations

1. 29 CFR 1910, "Occupational Safety and Health Standards".

   a. 29 CFR 1910.146 "Permit-required confined spaces".

2. 29 CFR 1926, "Safety and Health Regulations for Construction" (Construction Industry Standards).

   a. 29 CFR 1926.33 "Access to Employee Exposure and Medical Records".

   b. 29 CFR 1926.51, "Sanitation Standard".

   c. 29 CFR 1926.59, "Hazard Communication".

   d. 29 CFR 1926.62, "Lead".

   e. 29 CFR 1926.103 "Respiratory Protection".

3. 40 CFR 50, "National Primary and Secondary Ambient Air Quality

Standards"

a. 40 CFR 50 Appendix B, "Reference Method for the Determination of Suspended Particulate Matter in the Atmosphere (High Volume Method)".

b. 40 CFR 50 Appendix G, "Reference Method for the Determination of Lead in Suspended Particulate Matter Collected from Ambient Air".

4. 40 CFR 58, "Ambient Air Quality Surveillance".

5. 40 CFR 60 Appendix A, "Visual Determination of Fugitive Emissions from Material Sources and Smoke Emissions from Fires".

6. 40 CFR 117, "Determination of Reportable Quantities for Hazardous Substances".

7. 40 CFR 122, "Administered Permit Program: The National Pollutant Discharge Elimination System".

B. National Institute for Occupational Health and Safety

NIOSH Method 7082, "Lead" (or equivalent).

C. American Society for Testing and Materials

ASTM D3335, "Test Method for Low Concentrations for Lead, Cadmium, and Cobalt in Paint by Atomic Absorption Spectroscopy."

D. EPA (Environmental Protection Agency) Publications

1. SW-846, "Test Methods for Evaluating Solid Waste - Physical/Chemical Methods".

2. EPA Method 3050, "Acid Digestion of Sediments, Sludges, and Soils".

E. SSPC Guide 6, "Guide for Containing Debris Generated During Paint Removal Operations".

F. SSPC Guide 7, "Guide for the Disposal of Lead Contaminated Surface Preparation Debris".

G. SSPC Publication 91-18, "Industrial Lead Paint Removal Handbook".

H. Texas Commission on Environmental Quality

1. Texas Administrative Code (TAC) 30, Chapter 101, "General Rules".

2. Texas Administrative Code (TAC) 30, Chapter 111, "Control of Air Pollution from Visible Emissions and Particulate Matter".

3. Texas Administrative Code (TAC) 30, Chapter 290, "Water Hygiene".

4. Texas Administrative Code (TAC) 30, Chapter 307, "Surface Water Quality Standards".

5. Texas Administrative Code (TAC) 30, Chapter 309, "Effluent Limitations".

6. Texas Administrative Code (TAC) 30, Chapter 335, "Industrial Solid Waste and Municipal Hazardous Waste".

1.04 SUBMITTALS

A. Submittals shall conform to requirements of Section 01330 – Submittal Procedures.

B. Submittals shall conform to appropriate codes for regulatory requirements.

1.05 DEFINITION

A. Acceptance Criteria: Minimum standards for the content of programs, plans, procedures, and designs required by this specification for the performance of this project. Acceptance criteria will be the basis for judging the responsiveness of Contractors' programs and will also be used as a basis for suspending work, if necessary.

B. Action Level: Employee exposure, without regard to the use of respirators, to an airborne concentration of lead of 30 micrograms per cubic meter of air (µg/m3) calculated as an eight hour time-weighted average (TWA).

C. CERCLA: Comprehensive Environmental Response, Compensation, and Liability Act; commonly called Superfund. Federal laws addressing the clean up of hazardous waste sites. Amended in 1986 by Superfund Amendments and Re-Authorization Act (SARA). EPA implementing regulations are contained in 40 CFR 300-373.

D. Competent Person: One who is capable of identifying existing and predictable lead hazards in the surroundings or working conditions and who has authorization to take prompt corrective measures to eliminate them.

E. Containment System: An enclosure built around lead paint removal areas designed to contain lead paint debris and prevent emissions to the environment.

F. Dust Collection: Mechanical ventilation system designed specifically for the containment, capture, and removal of airborne particulate from the containment. Dust collection systems shall include ductwork, plenums and/or hoppers, and dust collector(s) for the removal of leaded paint dust from the air stream prior to discharging to the atmosphere.

G. Emission: A release of material to the air, water, or ground.

H. Entry/Exit Airlock: An isolated enclosure located at the entrance of the containment in which the workers remove contaminated dust and debris from their work clothes.

I. EPA: The US. Environmental Protection Agency. Regulations are contained in Title 40 of the Code of Federal Regulations (40 CFR).

J. Hazardous Waste (lead paint debris): Waste that is classified as hazardous due to its concentrations of regulated hazardous substances. Paint debris is classified as hazardous waste if, after testing by the Toxicity Characteristic Leaching Procedure (TCLP), the leachate contains any of the 8 metals or other substances in concentrations at or above limits established in 40 CFR 261.

K. HEPA: A high efficiency particulate filter (HEPA) that is 99.97% efficient against particles of 0.3 microns in size or larger.

L. Lead Containing Dust and Debris: Dust and debris generated during the project which contains lead in any amount, including but not limited to pulverized paint, spent abrasive, filters (wet and dry), and containment materials upon which lead is still present.

M. NIOSH: National Institute of Occupational Safety and Health.

N. OSHA: Occupational Safety and Health Administration. Standards are contained in Title 29 of the Code of Federal Regulations, Parts 1910 and 1926 (29 CFR 1910 and 29 CFR 1926).

O. Owner: The City of Houston

P. PEL: Permissible Exposure Limit. An employee exposure, without regard to the use of respirators, to an airborne concentration of lead of 50 µg/m3 over an 8 hour TWA.

Q. POTW: Publicly Owned Treatment Works

R. RCRA: Resource Conservation and Recovery Act. Federal law pertaining to hazardous waste management. EPA implementing regulations are contained in 40 CFR 240-280.

S. Regulated Area: Area established by the Contractor to demarcate the zone(s) beyond which airborne concentrations of lead do not exceed the Action Level.

T. SSPC: Society for Protective Coatings. An independent, non-profit organization of engineers, technical specialists, and Contractors whose goal is research and development of new coatings and methods for removal, application, and disposal of existing coatings on industrial structures.

U. Tarpaulins: Flexible fabric, vinyl, plastic or canvas cover sheets, impenetrable to dust, wind, and water, used to enclose the cable and/or scaffold support system comprising the containment enclosure.

V. TCLP: Toxicity Characteristic Leaching Procedure. Laboratory tests conducted on wastes that determine the amount of hazardous materials that leach out into a test solution. The test is intended to simulate the properties of water as it leaches through a solid waste landfill. TCLP testing is defined in 40 CFR 261, Appendix II.

W. TSP: Total Suspended Particulate

PART 2 PRODUCTS

2.01 MATERIAL AND EQUIPMENT

A. The Contractor is to supply materials and equipment to insure the safety and protection of workers and the environment in accordance with these specifications.

PART 3 EXECUTION

3.01 ENVIRONMENTAL PROTECTION AND MONITORING

NOTE: Section 09971 "Painting and Protective Coatings", 2.04 "Containment System" specifically identifies containment system requirements.

A. Protection of Ambient Air: Visible emissions are to be controlled to meet, as a minimum, TAC 30 Chapter 111," Control of Air Pollution from Visible Emissions and Particulate Matter" requirements and SSPC-Guide 6I (CON), Level 1 Emissions. Air monitoring and analysis may be performed by the City during abrasive blast cleaning operations. Such monitoring will be in accordance with 40

CFR 50, Appendix B, "Reference Method for the Determination of Suspended Particulate Matter in the Atmosphere" and/or 40 CFR 50, Appendix G, "Reference Method for the Determination of Lead in Suspended Particulate Matter Collected from Ambient Air". The limits for down wind pollutant concentrations allowed during blasting operations are as follows:

PM-10: 450 micrograms/cubic meter/ 8 hr.. (40 CFR 50.6)

Lead (Pb): 13.5 micrograms/cubic meter/8 hr.. (40 CFR 50.12)

Visible emissions and/or monitored emissions for PM-10 and TSP lead in excess of the above levels shall be cause for shut down of the project until corrections to control/ containment system or paint removal/ surface preparation operations are made to comply with these requirements.

B. Protection of Surface and Storm Water: The Contractor shall take all necessary precautions to ensure lead contaminants do not enter surface waters or storm water drainage systems.

1. The Contractor shall protect the area around ditches and drainage inlets. Daily verification of proper protection to minimize the potential contaminants reaching the drainage system shall be performed.

2. The Contractor shall collect all potentially contaminated process waters for testing and, as appropriate, treatment. Process water from pressure washing, wet abrasive blast cleaning or hygiene facilities shall not be discharged to drainage systems or surface waters.

3. The Contractor may remove lead or other heavy metals from such waters through filtration, ion exchange or other approved means. Following treatment, water samples must be tested prior to disposal. Discharge to sanitary sewer lines requires authorization, in writing, from a POTW.

C. Protection of Soil and Grounds: The Contractor shall protect the soil around the structure to ensure that the soil does not become contaminated. Where lead is present in the coatings to be removed, as indicated in Section 02136 "Waste Material Handling and Disposal", the Contractor shall provide for the sampling and analysis of soil samples for total lead content.

1. Sampling and analysis shall be performed prior to commencement of paint removal operations to establish a background "base level". Soil samples shall be taken 3 feet from the base of the tank(s), at a distance of 6-10 feet beyond the proposed containment structure and at the property line.

2. Samples from each area shall be taken in a minimum of four directions, at

circular increments of 90^0, one of which shall include the direction of prevailing wind. Samples shall also be obtained, at the direction of the engineer, at the closest points of public access (i.e. housing, park, school).

3. The soil sampling procedure shall be as outlined in SSPC Guide 6 Section 5.5.5. Each sampling point shall be sufficiently identified on a site map to allow return to the exact location upon project completion.

4. Each sample shall be split in two portions, one for immediate analysis and the other sealed, preserved and furnished to the Engineer. The samples shall be analyzed in accordance with EPA Method 3050, "Acid Digestion of Sediments, Sludges and Soils", and shall be performed by a qualified laboratory approved by the Engineer.

5. Samples shall be obtained at the completion of work (post-construction samples) from all locations from which pre-construction samples were obtained. Samples shall be collected, handled and tested in the same manner as described above.

6. Upon completion of the work, soils found to be contaminated with lead in greater quantity than found in the background "base level", established at the start of the work, shall be removed by the Contractor to the depth necessary to achieve a lead content equivalent to, or below, the pre-construction back ground levels. Disposal shall be in accordance with applicable regulations.

7. The Contractor shall replace in-kind (i.e., topsoil, structural fill, etc.) with an equivalent amount of non-contaminated soil, compact in place and grade to pre-existing conditions. The Contractor shall also replace in-kind any surface improvements, such as grass, shrubs, etc. that were damaged or destroyed by the work. The soil removal, replacement and related work is to be performed by the Contractor at no additional cost to the Owner.

3.02 WORKER PROTECTION

A. The Contractor shall develop a written Compliance Program to establish and implement practices and procedures for assuring that no employee is exposed to lead at concentrations greater than 50 micrograms per cubic meter of air ($\mu g/m^3$), the OSHA permissible exposure limit (PEL). This program is in addition to other OSHA hazard communication and safety and health requirements of the project, and shall be revised and updated at least every six months.

1. The program shall establish methods for complying with this specification and the OSHA Construction Industry Lead Standard, 29 CFR 1926.62(e)(2)(ii). The Federal regulation is referred to as the "Lead

Standard" for the purpose of this specification.

2. The program shall apply to all Contractor employees associated with lead on the project, and to subcontractors working under the direct control of the Contractor who are associated with lead on the project.

3. The program shall assign the specific responsibility for implementation and enforcement of the program to the Contractors' company management. The Contractor's Competent Person(s) shall be identified, by name, and qualifications submitted. The Competent Person shall be on-site during any operations which involve the removal, handling or disturbing of lead containing materials.

4. The program shall contain a description of each activity in which lead is emitted (e.g. equipment used, material involved, controls in place, crew size, employee job responsibilities, operating procedures and maintenance practices).

5. The program shall contain a report of the technology considered in meeting the PEL and air monitoring data which documents the source of lead emissions.

6. The program shall contain a work practice program which includes items required in the lead standard such as protective clothing and equipment, housekeeping, and hygiene facilities and practices.

B. Exposure Monitoring: The Contractor shall be responsible for conducting and reporting worker exposure assessments in accordance with 29 CFR 1926.62.

1. Representative personal air samples shall be collected at the beginning of the lead removal work to determine employee lead exposures. Tasks involving potential lead exposure include, but are not limited to, paint removal operations, clean-up, and debris handling operations. Full shift (at least 7 hours) air samples shall be collected for each job classification in the exposure area. The range of exposures for lead removal and cleanup activities shall be determined.

2. During the initial monitoring, workers performing the following activities (or equivalent) shall be protected to the anticipated exposure levels which are dictated by the lead standard:

   a. 500 $\mu g/m^3$: Manual demolition of structures containing lead-containing coatings or paint (e.g., dry wall), manual scraping, manual sanding, heat gun applications, power tool cleaning with dust collection systems, and spray painting with lead paint.

b. 2,500 $\mu g/m^3$: Using lead-containing mortar, lead burning, or conducting the following activities where lead-containing coatings or paint are present: rivet busting, power tool cleaning without dust collection systems, clean-up activities where dry expendable abrasives are used, and the movement and removal of abrasive blasting enclosures.

c. More than 2,500 $\mu g/m^3$: Activities involving lead containing coatings or paint on structures disturbed by abrasive blasting, welding, cutting, and torch burning.

3. Protection requires compliance with the necessary respiratory protection, personal protective clothing and equipment, change areas and washing facilities, blood lead and zinc protoporphyrin monitoring, and employee training. The protection measures shall be modified, as necessary, after the exposure results are received.

4. Where initial monitoring indicates that lead exposures are below the Action Level, and where work activities and conditions remain the same as at the time of initial sampling, additional monitoring need not be repeated for that work activity.

5. Where the initial monitoring of a given work activity indicates that lead exposures are at or above the Action Level, additional exposure monitoring shall be conducted monthly. The monthly monitoring is more frequent than frequencies established in the lead standard which are at least every 6 months if above the Action Level, but below the PEL, or every 3 months if above the PEL.

6. All air samples shall be collected and analyzed according to NIOSH Method 7082, or equivalent. All samples shall be analyzed by laboratories accredited by the American Industrial Hygiene Association for metals analysis.

7. All exposed employees shall be notified in writing of the monitoring results within five (5) days after receiving the results.

8. The Action Level for airborne lead exposure is 30 $\mu g/m^3$, as an 8-hour time weighted average (TWA) concentration, without regard to the use of respirators. Whenever workers' airborne lead exposures exceed the Action Level, the Contractor shall implement the following:

   a. Periodic Exposure Monitoring
   b. Employee Information and Training

c. Employee Medical Surveillance and Medical Removal Protection
d. Housekeeping
e. Record keeping
f. Signs and Regulated Areas

9. The Permissible Exposure Limit (PEL) for airborne lead exposure is 50 $\mu g/m^3$, as an 8-hour TWA concentration. When the work area contains airborne lead levels above the PEL the Contractor shall implement the following in addition to those items listed in 3.02.B.8 of this section:

a. Compliance Program
b. Respiratory Protection
c. Protective Clothing and Equipment
d. Hygiene Facilities and Practices

C. Respiratory Protection: After feasible engineering controls and work practices have been implemented, respiratory protection shall be used to maintain employees' lead exposures below the PEL.

1. Respirators shall be worn by all employees, other Contractors, inspectors, or observers who enter regulated areas.

2. The Contractor shall develop a written Respiratory Protection Program in compliance with 29 CFR 1910.134, paragraphs (b), (d), (e), and (f), and the lead standard. The program shall address the selection, use, maintenance, and inspection of respirators, and qualifications for respirator users.

D. Protective Clothing and Equipment: The Contractor shall provide protective clothing and equipment and ensure they are worn by all employees whose lead exposures exceed the PEL, or who enter regulated areas.

1. Protective clothing shall include washable and/or disposable full body coveralls, gloves, foot coverings, and hoods. Other protective equipment shall include face shields, hard hats, eye protection, and hearing protection as appropriate.

2. Disposable protective clothing shall be used for no more than one work day. Such clothing may have to be disposed of as hazardous waste.

3. Reusable protective equipment shall be cleaned or replaced weekly if exposure levels are less than 200 $\mu g/m^3$, or daily if the exposure levels are greater than or equal to 200 $\mu g/m^3$.

4. Clothing shall not be removed or "cleaned" by any means which could reintroduce the lead dust into the ambient air. This includes brushing,

shaking, and blowing. Vacuums equipped with HEPA filters shall be used for this purpose.

5. Reusable coveralls shall be collected at the end of each work day in closed containers. The containers shall be labeled in accordance with the requirements of 29 CFR 1926.62(g)(2)(vii). Contaminated clothing shall be cleaned in accordance with all applicable Federal, State, or local regulations pertaining to lead-contaminated laundry and water discharge. Laundries shall be informed that the clothing contains lead. If the clothing is washed on site, the discharge water shall be filtered, containerized, and arrangements made with the local POTW or other approved means of proper disposal.

6. Protective clothing and equipment shall be removed in the contaminated section of the change area and shall not be worn into any clean areas.

7. The Contractor shall provide the necessary clothing and equipment for use by the Owner and its designated representatives.

E. Housekeeping: Accumulations of lead-containing dust and debris generated by work activities shall be removed and cleaned daily.

1. All persons doing the cleanup shall be trained in performing lead activities, respirator qualified, and participate in the medical surveillance program. Respirators and protective clothing shall be worn by all persons doing the cleanup.

2. Compressed air may be used for housekeeping if used within containment and in conjunction with a ventilation system designed to capture the dust. Otherwise, HEPA-filtered vacuum cleaners shall be employed.

3. All lead-containing dust and debris shall be collected in sealed containers. The waste shall be tested to determine whether it will be disposed of as hazardous waste.

F. Personal Hygiene Facilities and Practices

1. Clean change areas shall be provided when employees' lead exposures exceed the PEL. The change areas shall be equipped with storage facilities for street clothing and a separate area for the removal and storage of lead-contaminated clothing and equipment. They shall be designed and used so that contamination of street clothing does not occur. Employees shall not leave the project site wearing any clothing worn while performing lead activities. Airborne lead exposures in the change area shall be maintained below the Action Level.

2. Shower facilities shall be provided whenever employees' lead exposures exceed the PEL. Shower facilities shall comply with OSHA Sanitation Standard, 29 CFR 1929.51. All employees whose lead exposures exceed the PEL shall shower at the end of each work shift or before leaving the project area. The shower facilities shall be made available for use by the Owner and its representatives, such as inspectors or observers.

3. Arrangements shall be made with the local POTW for the proper disposal of the shower and wash water after filtration (e.g., through a three stage 100, 50, and 5 micron filtering system), ion exchange, or other approved treatment technology.

4. Clean lunch areas shall be provided for all employees whose lead exposures exceed the PEL. Employees shall remove or clean (by vacuuming) their protective clothing and wash their hands and face before entering the lunch area. Lead exposures in the lunch area shall be maintained as free as practicable from lead contamination.

5. An adequate number of clean lavatory and hand washing facilities shall be provided. These shall comply with the OSHA Sanitation Standard, 29 CFR 1929.51.

6. Eating, drinking, smoking, chewing of food or tobacco products, or the application of cosmetics shall not be permitted in any areas where the lead exposures exceed the PEL. Thorough washing of hands and face is required prior to undertaking any of these activities.

G. Medical Surveillance and Medical Removal Protection

1. All employees who are exposed to lead above the Action Level in a single day during this project shall be provided with initial and periodic medical examinations and blood lead tests as required by the lead standard. A final blood lead test shall be provided for each worker upon completion of the project, or at any time a worker's employment at the project ceases.

2. When blood lead levels over 50 µg/dl are encountered, the Contractor shall provide for the temporary removal of employees from lead exposure above the Action Level. The required medical surveillance and periodic blood lead tests shall be provided in strict accordance with the lead standard throughout the removal.

3. Employees who will be required to wear a respirator or who request one shall be provided with a respirator and the necessary medical examinations to determine their ability to wear a respirator.

4. All examinations shall be provided by the Contractor and shall be performed by or under the direct supervision of a licensed physician.

H. Employee Information and Training

1. The Contractor shall provide lead training for all employees who are exposed to lead above the Action Level for this project.

2. The content of lead training shall include, as a minimum, those items listed in the lead standard.

3. Training shall also include hazard communication in accordance with 29 CFR 1926.59.

4. The Contractor shall notify other employers at the project site of the nature of the lead exposure work, the need to remain out of exposure areas, the warning sign and labeling system in effect, and the potential need for them to take measures to protect their employees.

I. Signs and Regulated Areas

1. The Contractor shall establish a regulated area surrounding activities where lead exposures exceed the Action Level. This includes locations where lead-containing debris is handled or transferred to storage containers.

2. The regulated area shall be demarcated by ropes, tape, walls, or containment's with caution signs posted at all accessible sides. Signs shall contain the legend:

WARNING
LEAD WORK AREA
POISON
NO SMOKING OR EATING

3. The Contractor shall control access of persons into regulated areas. Access shall be limited to individuals with proper training and personal protective equipment, and medical surveillance testing.

4. All persons entering regulated areas shall wear protective clothing and respirators.

5. Eating, drinking, smoking, and chewing of food or tobacco products shall be prohibited in regulated areas and in any area where lead exposures exceed the Action Level.

J. Record keeping: All records relating to training, medical examinations, blood lead monitoring, and exposure monitoring shall be maintained by the Contractor as required by the lead standard. All records shall be available for review by the Owner or its representative upon request.

3.03 CERTIFIED INDUSTRIAL HYGIENIST (CIH)

A. The Contractor shall provide for the services of a Certified Industrial Hygienist (CIH) who must be certified by the American Board of Industrial Hygiene in comprehensive practice.

B. Duties of the CIH shall be as follows:

1. Conduct and/or verify training for contractor employees in accordance with 29 CFR 1926.62 (l).

2. Review and approve Contractor's Written Compliance Plan for conformance to 29 CFR 1926.62(e)(2)(ii) and this Specification.
3. Monitor and evaluate work weekly to assure conformance with the approved plan and that hazardous exposure is adequately controlled in accordance with worker safety and health requirements of these specifications

4. Provide monthly reports of work compliance with control requirements in regards to working in a lead environment.

C. Activities of the CIH shall include:

1. Meet with City to discuss details of Contractor's Written Compliance Plan for lead paint removal.

2. Ensure worker and area air monitoring, testing and reporting are conducted by or under the direction of the CIH.

3. Furnish a detailed worker and area air monitoring schedule coordinated with Contractor's proposed production schedule.

4. Directing, monitoring and inspecting lead paint removal work to ensure that the requirements of the Contract have been satisfied during the entire lead paint removal operation.

5. Report results of air monitoring samples to the Engineer, signed by the CIH within 48 hours after the air samples are taken.

6. The CIH shall review sampling data, collected on a day when lead paint

removal operations occur, to determine if conditions require any change in work methods. Removal work shall not continue until approval is given by the CIH.

7. The CIH shall verify in writing and submit monitoring data to verify that:

   a. Air borne lead levels at and beyond the lead control (regulated) area were and remained less than 30 mg/m^3 of air

   b. Contractor conformance to 29 CFR 1926.62 and Item 3.02, above

   c. There were no visible accumulations of lead contaminated paint, dust or debris on the work site. Adjacent areas that may have become contaminated were properly cleaned and inspected.

   d. The CIH shall verify that the work area and contractor's equipment have been adequately cleaned of lead contamination prior to demobilization from the work site.

3.04 DEMOBILIZATION

The Contractor shall not remove the lead control area, boundaries, warning signs, etc. prior to proper removal of all hazardous wastes, debris and materials from the site and the City's receipt and acceptance of the CIH's verification.

END OF SECTION

Section 01410

TPDES REQUIREMENTS

1.01 SECTION INCLUDES

A. Documentation to be prepared and signed by Contractor/Operator before conducting construction operations, in accordance with the Texas Pollutant Discharge Elimination System (TPDES) Construction General Permit Number TXR 150000 issued February 15, 2008 (the Construction General Permit).

B. Implementation, maintenance inspection, and termination of storm water pollution prevention control measures including, but not limited to, erosion and sediment controls, storm water management plans, waste collection and disposal, off-site vehicle tracking, and other appropriate practices shown on the Drawings or specified elsewhere in the Contract.

C. Review of the Storm Water Pollution Prevention Plan (SWP3) implementation in a meeting with Project Manager prior to start of construction.

1.02 DEFINITIONS

A. Commencement of Construction Activities: The exposure of soil resulting from activities such as clearing, grading, and excavation activities, as well as other construction related activities (e.g., stock piling of fill material, demolition).

B. Large Construction Activity: Project that:o

1. disturbs five acres or more, or

2. disturbs less than five acres but is part of a larger common plan of development that will disturb five acres or more of land.

C. Small Construction Activity: Project that:

1. disturbs one or more acres but less than five acres, or

2. disturbs less than one acre but is part of a larger common plan of development that will ultimately disturb one or more acres but less than five acres.

D. TPDES Operator:

Operator - The person or persons associated with a large or small construction activity that is either a primary or secondary as defined below:

Primary Operator – the person or persons associated with a large or small construction activity that meets either of the following two criteria:

(a) the persons have operational control over construction plans and specifications, including the ability to make modifications to those plans and specifications; or

(b) the person or persons have day-to-day operational control of those activities at a construction site that are necessary to ensure compliance with a storm water pollution prevention plan (SWP3) for the site or other permit conditions (e.g., they are authorized to direct workers at a site to carry out activities required by the SWP3 or comply with other permit conditions).

Secondary Operator – The person whose operational control is limited to the employment of other operators or to the ability to approve or disapprove changes to plans and specifications. A secondary operator is also defined as a primary operators if there are no other operators if there are no other operators at the construction site.

PART 2 P R O D U C T S - Not Used

PART 3 E X E C U T I O N

3.01 SITE SPECIFIC STORM WATER POLLUTION PREVENTION PLAN (SWP3)

A. Prepare a SWP3 following Part III of the Construction General Permit and the Storm Water Management Handbook for Construction Activities issued under City Ordinance Section 47-695(b). If conflicts exist between the Construction General Permit and the handbook, the more stringent requirements will apply.

B. Update or revise the SWP3 as needed during the construction following Part III, Section E of the Construction General Permit.

C. Submit the SWP3 and any updates or revisions to Project Manager for review and address comments prior to commencing, or continuing, construction activities.

3.02 NOTICE OF INTENT For Large Construction Activity

A. Fill out, sign, and date TCEQ Form 20022 (03/05/2008) Notice of Intent (NOI) for Storm Water Discharges Associated with Construction Activity under the TPDES Construction General Permit (TXR 150000), **ATTACHMENT 1** of this Section 01410.

B. Transmit the signed Contractor's copy of TCEQ Form 20022 (03/05/2008), along with a $325.00 check, made out to Texas Commission on Environmental Quality, and the completed Payment Submittal Form to Project Manager.

C. Project Manager will complete a separate TCEQ Form 20022 (03/05/2008) f City's Notice of Intent, and will submit both Notices, along with checks for application fees, to the TCEQ.

D. Submission of the Notice of Intent form by both the City and Contractor to TCEQ if mailing is required a minimum of seven days before Commencement of Construction Activities.

3.03 CONSTRUCTION SITE NOTICE FOR SMALL CONSTRUCTION ACTIVITY

A. Fill out, sign, and date the Construction Site Notice, Attachment 2 to TPDES General Permit TXR 150000, "Construction Site Notice", **ATTACHMENT 2** of this Section 01410.

B. Transmit the signed Construction Site Notice to Project Manager at least seven days prior to Commencement of Construction Activity.

3.04 CERTIFICATION REQUIREMENTS

A. Fill out TPDES Operator's Information form, **ATTACHMENT 3** of this Section 01410, including Contractor's name, address, and telephone number, and the names of persons or firms responsible for maintenance and inspection of erosion and sediment control measures. Use multiple copies as required to document full information.

B. Contractor and Subcontractors shall sign and date the Contractor's / Subcontractor's Certification for TPDES Permitting, **ATTACHMENT 4** of this Section 01410. Include this certification with other Project certification forms.

C. Submit properly completed certification forms to Project Manager for review before beginning construction operations.

D. Conduct inspections in accordance with TCEQ requirements. Ensure persons or firms responsible for maintenance and inspection of erosion and sediment control measures read, fill out, sign, and date the Erosion Control Contractor's Certification for Inspection and Maintenance. Use the City of Houston Storm Water Pollution Prevention Plan, Construction Site Inspection Report, **ATTACHMENT 5** of this Section 01410 to record maintenance inspections and repairs.

3.05 RETENTION OF RECORDS

A. Keep a copy of this document and the SWP3 in a readily accessible location at the construction site from Commencement of Construction Activity until submission of the Notice of Termination (NOT) for Storm Water Discharges Associated with Construction Activity under TPDES Construction General Permit (TXR 150000). Contractors with day-to-day operational control over SWP3 implementation shall have a copy of the SWP3 available at a central location, on-site, for the use of all operators and those identified as having responsibilities under the SWP3. Upon submission of the NOT, submit all required forms and a copy of the SWP3 with all revisions to Project Manager.

3.06 REQUIRED NOTICES

A. Post the following notices from effective date of the SWP3 until date of final site stabilization as defined in the Construction General Permit:

1. Post the TPDES permit number for Large Construction Activity, with a signed TCEQ Construction Site Notice for large or Small Construction Activity. Signed copies of the City's and Contractor's NOI must also be posted.

2. Post notices near the main entrance of the construction site in a prominent place where it is safely and readily available for viewing by General Public, Local, State, and Federal Authorities. Post name and telephone number of Contractor's local contact person, brief project description and location of the SWP3.

    a. If posting near a main entrance is not feasible due to safety concerns, coordinate posting of notice with Project Manager to conform to requirements of the Construction General Permit.

    b. If Project is a linear construction project (e.g.: road, utilities, etc.), post notice in a publicly accessible location near active construction. Move notice as necessary.

3. Post a notice to equipment and vehicles operators, instructing them to stop, check, and clean tires of debris and mud before driving onto traffic lanes. Post at each stabilized construction access area.

4. Post a notice of waste disposal procedures in a readily visible location on site.

3.07 ON-SITE WASTE MATERIAL STORAGE

A. On-site waste material storage shall be self-contained and shall satisfy appropriate local, state, and federal rules and regulations.

B. Prepare list of waste material to be stored on-site. Update list as necessary to include up-to-date information. Keep a copy of updated list with the SWP3.

C. Prepare description of controls to reduce pollutants generated from on-site storage. Include storage practices necessary to minimize exposure of materials to storm water, and spill prevention and response measures consistent with best management practices. Keep a copy of the description with the SWP3.

3.08 NOTICE OF TERMINATION

A. Submit a NOT, **ATTACHMENT 7** of this Section 01410, to Project Manager within 30 days after:

1. Final stabilization has been achieved on all portions of the site that are the responsibility of the Contractor; or

2. Another operator has assumed control over all areas of the site that have not been stabilized; and

3. All silt fences and other temporary erosion controls have either been removed, scheduled to be removed as defined in the SWP3, or transferred to a new operator if the new operator has sought permit coverage.

B. Project Manager will complete City's NOT and submit Contractor and City's notices to the TCEQ and MS4 entities.

END OF SECTION

PAGE LEFT INTENTIONALLY BLANK

ATTACHMENT 1

Notice of Intent (NOI) for Storm Water Discharges Associated with Construction Activity under the TPDES Construction General Permit (TXR150000)

For help completing this application, read the TXR150000 NOI Instructions (TCEQ-20022-Instructions).

TCEQ Office Use Only
TPDES Permit Number: TXR15|__|__|__|__|__| - NO
GIN Number: |__|__|__|__|__|__|__|__|

A. Construction Site Operator ☐New ☐No Change Customer Reference Number: CN_____
Name:_____
Mailing Address:_____ City:_____ State:____ Zip Code:_____
Country Mailing Information (*if outside USA*) Territory:_____ Country Code:_____ Postal Code:_____
Phone Number:_____ Extension:_____ Fax Number:_____
E-mail Address:_____
Type of Operator: ☐ Individual ☐ Sole Proprietorship - D.B.A. ☐ Partnership ☐ Corporation ☐ Federal Government
☐ State Government ☐ County Government ☐ City Government ☐ Other:_____
Independent Operator? ☐ Yes ☐ No Number of Employees: ☐ 0-20 ☐ 21-100 ☐ 101-250 ☐ 251-500 ☐ 501 or higher
Federal Tax ID:_____ State Franchise Tax ID Number:_____ DUNS Number:_____

B. Billing Address
Name:_____
Mailing Address:_____ City:_____ State:____ Zip Code:_____
Country Mailing Information (*if outside USA*) Territory:_____ Country Code:_____ Postal Code:_____

C. Project / Site Information ☐New ☐No Change Regulated Entity Reference Number: RN_____
Name:_____
Mailing Address:_____ City:_____ State:____ Zip Code:_____
Physical Address:_____ City:_____ County:_____ Zip Code:_____
Location Access Description:_____
Latitude:___ °___ '___ " N Longitude:___ °___ '___ " W Degrees (°), Minutes ('), and Seconds (")
Latitude:_____ Longitude:_____ Decimal Form
Standard Industrial Classification (SIC) code:_____ Also, describe the construction activity at this site (*do not repeat the SIC code*):
_____
Has a storm water pollution prevention plan been prepared as specified in the general permit (TXR150000)? ☐ Yes ☐ No
Estimated area of land disturbed (to the nearest acre):_____ Is the project / site located on Indian Country Lands? ☐ Yes ☐ No
Does this project / site discharge storm water into a municipal separate storm sewer system (MS4)? ☐ Yes ☐ No
If yes, provide the name of the MS4 operator:_____
Provide the name or segment number of the water body that receives storm water from this project / site:_____

D. Contact - If the TCEQ needs additional information regarding this application, who should be contacted?
Name:_____ Title:_____
Phone Number:_____ Extension:_____ Fax Number:_____
E-mail Address:_____

E. Payment Information - Check / Money Order Number:_____ Name on Check / Money Order:_____

F. Certification
I certify under penalty of law that this document was prepared under my direction or supervision in accordance with a system designed to assure that qualified personnel properly gather and evaluate the information submitted. Based on my inquiry of the person or persons who manage the system, or those persons directly responsible for gathering the information, the information submitted is, to the best of my knowledge and belief, true, accurate, and complete. I am aware there are significant penalties for submitting false information, including the possibility of fine and imprisonment for knowing violations.

Construction Site Operator:
Prefix:_____ First:_____ Middle:_____
Last:_____ Suffix:_____ Title:_____
Signature:_____ Date:_____

If you have questions on how to fill out this form or about the storm water program, please contact us at (512) 239-4671.
Individuals are entitled to request and review their personal information that the agency gathers on its forms. They may also have any errors in their information corrected. To review such information, contact us at (512) 239-3282.

The completed NOI must be mailed to the following address. Use the attached document to submit the $100 application fee. Please note that the NOI and application fee are submitted separately to different addresses.

Texas Commission on Environmental Quality
Storm Water & General Permits Team; MC - 228
P.O. Box 13087
Austin, Texas 78711-3087

TCEQ-20022 (05/03) Page 1 of

ATTACHMENT 1

Texas Commission on Environmental Quality
Payment Submittal Form

The storm water application fee shall be sent under separate cover to the Texas Commission on Environmental Quality.

This form must be used to submit your Storm Water Application Fee. Please complete the following information, staple your check in the space provided at the bottom of this document, and mail it to:

BY REGULAR U.S. MAIL

Texas Commission on Environmental Quality
Financial Administration Division
Cashier's Office, MC-214
P.O. Box 13088
Austin, TX 78711-3088

BY OVERNIGHT/EXPRESS MAIL

Texas Commission on Environmental Quality
Financial Administration Division
Cashier's Office, MC-214
12100 Park 35 Circle
Austin, TX 78753

Fee Code: GPA

Storm Water General Permit: TXR150000

Check / Money Order No: _____ Amount of Check/Money Order: _____

Date of Check or Money Order: _____

Name on Check or Money Order: _____

Facility / Site Name: _____

Facility / Site Physical Address: _____

City: _____ Zip Code: _____

Staple Check In This Space

ATTACHMENT 1

Completing the Notice of Intent for Storm Water Discharges Associated with Construction Activity under the TPDES Construction General Permit (TXR150000)

A. Construction Site Operator Information

Check boxes and Customer Reference Number
These boxes designate the operator's status as a TCEQ "customer"—in other words, an individual or business that is involved in an activity that we regulate. We assign each customer a number that begins with "CN," followed by nine digits. ***This is not a permit number, registration number, or license number.*** In the remainder of this section, we will use "this customer" to mean the operator for Part A of the form.

- If this customer has not been assigned a Customer Reference Number or if this number is unknown, check "New" and leave the space for the Customer Reference Number blank.
- If this customer has already been assigned this number, enter the operator's Customer Reference Number and:
  - Check "No Change" if all the remaining customer information is the same as previously reported. However, you must still complete most blanks in this form for this notice of intent to be valid.
  - If this customer's information has changed since the last time it was reported to the TCEQ, check neither box and complete the remainder of this notice of intent.
- ***Do not enter a permit number, registration number, or license number in place of the Customer Reference Number.***

Name
Enter the legal name of this customer as authorized to do business in Texas. Include any abbreviations (LLC, Inc., etc.).

Mailing Address
Enter a central and general mailing address for this customer to receive mail from the TCEQ. For example, if this customer is a large company, this address might be the corporate or regional headquarters. On the other hand, for a smaller business, this address could be the same as the site address.

If this is a street address, please follow US Postal Service standards. In brief, these standards require this information in this order.

- the "house" number—for example, the 1401 in 1401 Main St
- if there is a direction before the street name, the one- or two-letter abbreviation of that direction (N, S, E, W, NE, SE, SW, or NW)
- the street name (if a numbered street, do not spell out the number—for example, 6th St, not Sixth St)
- an appropriate abbreviation of the type of street—for example, St, Ave, Blvd, Fwy, Expy, Hwy, Cr, Ct, Ln
- if there is a direction after the street name, the one- or two-letter abbreviation of that direction (N, S, E, W, NE, SE, SW, or NW)
- if there is a room number, suite number, or company mail code

City, State, *and* ZIP Code
Enter the name of the city, the two-letter USPS abbreviation for the state (for example, TX), and the ZIP Code. (Enter the full ZIP+4 if you know it.)

Country Mailing Information
If this address is ***outside*** the United States, enter the territory name, country code, and any non-ZIP mailing codes or other non–U.S. Postal Service features here. If this address is ***inside*** the United States, leave these spaces blank.

Phone Number *and* Extension
This number should correspond to this customer's mailing address given earlier. Enter the area code and phone number here. Leave "Extension" blank if this customer's phone system lacks this feature.

Fax Number
This number should correspond to this customer's mailing address given earlier. Enter the area code and fax number here.

E-mail Address
As with the mailing address, this should be a general address that is appropriate for e-mail to this customer's central or regional headquarters, if applicable.

If "No Change" was checked for this customer, you may skip the rest of the fields in this part of the form and continue to the next part of the NOI.

Type of Operator
Check *only one* box.

Check ...	*if this customer ...*
Individual	is a person and has not established a business to do whatever causes them to be regulated by us.
Sole Proprietorship—D.B.A.	is a business that is owned by only one person and has not been incorporated. This business may: • be under the person's name • have its own name ("doing business as," or d.b.a.) • have any number of employees
Partnership	is a business that is established as a partnership as defined by the Texas Secretary of State's Office.
Corporation	meets all of these conditions: • is a legally incorporated entity under the laws of any state or country • is recognized as a corporation by the Texas Secretary of State • has proper operating authority to operate in Texas
Federal, state, county, or city government (as appropriate)	is either an agency of one of these levels of government or the governmental body itself (If a utility district, water district, tribal government, college district, council of governments, or river authority, check "Other" and write in the specific type of government.)
Other	fits none of the above descriptions. Enter a short description of the type of customer in the blank provided.

Independent Operator?
Check "No" if this customer is a subsidiary or part of a larger company. Otherwise, check "Yes."

Number of Employees
Check one box to show the number of employees for this customer's entire company, at all locations. ***This is not necessarily the number of employees at the site named in this NOI.***

Federal Tax ID
All businesses, except for some small sole proprietors, should have a federal taxpayer identification number (TIN). Enter this number here. Use no prefixes, dashes, or hyphens. Individuals and sole proprietors do not need to provide a federal tax ID.

State Franchise Tax ID
Corporations and limited liability companies that operate in Texas are issued a franchise tax identification number. If this customer is a corporation or limited liability company, enter this number here.

DUNS Number
Most businesses have a DUNS (Data Universal Numbering System) number issued by Dun and Bradstreet Corp. If this customer has one, enter it here.

B. Billing Address

We will mail the annual fee invoice for this site to the address entered in this section.

Name
Enter the legal name of the person or business to which we should mail this site's fee invoice each year.

Mailing Address
Enter the specific mailing address to which we should mail this site's fee invoice each year. If this is a street address, please follow the US Postal Service standards as described under "A. Construction Site Operator Information" on page 1 of these instructions.

City, State, *and* ZIP Code
Enter the name of the city, the two-letter USPS abbreviation for the state (for example, TX), and the ZIP Code. (Enter the full ZIP+4 if you know it.)

Country Mailing Information
If this address is ***outside*** the United States, enter the territory name, country code, and any non-ZIP mailing codes or other non–U.S. Postal

ATTACHMENT 1

Service features here. If this address is ***inside*** the United States, leave these spaces blank.

C. Project / Site Information

Check boxes *and* Regulated Entity Reference Number
These boxes designate this site's status as a TCEQ "regulated entity"—in other words, a location where an activity that we regulate occurs. We assign each regulated entity a number that begins with "RN," followed by nine digits. ***This is not a permit number, registration number, or license number.***

- If this site has not been assigned a Regulated Entity Reference Number or if this number is unknown, check "New" and leave the space for the Regulated Entity Reference Number blank.
- If this site has already been assigned this number, enter the Regulated Entity Reference Number and:
  - Check "No Change" if all the remaining information is the same as previously reported. However, even if there has been no change, you must complete this section at least through "E-mail Address" for this NOI to be valid.
  - If this site's information has changed since the last time it was reported to the TCEQ, check neither box and complete the remainder of this notice of intent.
- ***Do not enter a permit number, registration number, or license number in place of the Regulated Entity Reference Number.***

Name
Enter the name by which you want this site to be known to the TCEQ.

Mailing Address
Enter the specific mailing address for this site. If this is a street address, please follow the US Postal Service standards as described under "A. Construction Site Operator Information" on page 1 of these instructions. If the project / site's mailing address is the same as what is provided in Section A, you may enter "Same as Section A".

City, State, *and* ZIP Code
Enter the name of the city, the two-letter USPS abbreviation for the state (for example, TX), and the ZIP Code. (Enter the full ZIP+4 if you know it.)

Physical Address
Enter the physical address of the site itself. TCEQ staff should be able to use this address to find the site. Please follow the US Postal Service standards as described under "A. Construction Site Operator Information" on page 1 of these instructions. If the project / site does not have a physical address, enter "No Address".

City, County, *and* ZIP Code
Enter the name of the city, the county, and the ZIP Code. (Enter the full ZIP+4 if you know it.) This information must be provided even if you have entered "No Address" in the previous field.

Location Access Description
Enter a physical description of the location of the site based on highway intersections and/or permanent landmarks.

Latitude *and* Longitude
Enter the latitude and longitude of the site in ***either*** degrees, minutes, and seconds ***or*** decimal form.

For help obtaining the latitude and longitude, go to:
http://www.tnrcc.state.tx.us/gis/drgview.html

Standard Industrial Classification (SIC) Code and Activity Description

Provide the SIC code that best describes the construction activity being conducted at the site.

For help with SIC codes, go to:
http://www.osha.gov/oshstats/sicser.html

In addition to the SIC code, you must also provide a description of the construction activity being conducted at the site. This may include such descriptions as: "Apartment Building Construction" or "Shopping Center Construction."

Storm Water Pollution Prevention Plan
This plan identifies the areas and activities that could produce contaminated runoff at your site and then tells how you will ensure that this contamination is mitigated. For example, in describing your mitigation measures, your site's plan might identify the devices that collect and filter storm water, tell how those devices are to be maintained, and tell how frequently that maintenance is to be carried out. ***You must develop this plan before you complete this NOI.*** This plan must be available for a TCEQ investigator to review on request. Specific requirements for the development of the plan can be found in the *Texas Pollutant Discharge Elimination System Construction General Permit (TXR150000).*

Estimated Area of Land Disturbed
Provide the approximate number of acres that the construction site will disturb. It is appropriate to enter a value less than 5, only if the project is part of a larger common plan that disturbs five or more acres. If the acreage is less than 1, enter 1. "Disturb" means any clearing, grading, excavating, or other similar activities.

Is the site located on Indian Country Lands?
Check "Yes" only if the site is on a reservation or other areas designated by the federal government as Indian Country Lands. If not, check "No."

Destination of Storm Water Discharge
The storm water from your site eventually reaches a receiving water body such as a local stream or lake, possibly via a drainage ditch. The discharge may initially be into a municipal separate storm sewer system (MS4). Check the appropriate boxes for whether storm water is discharged into an MS4. If you checked "Yes" to "An MS4?", then enter the name of the entity that operates the storm sewer—often a city, town, or utility district, but possibly another form of government.

You must also provide the name of the water body that receives the discharge from the construction site (a local stream or lake). Storm water may be discharged directly to a receiving stream or via a storm sewer system. If known, please include the segment number if the discharge is to a classified water body.

For a map that includes segment numbers, go to:
http://www.tnrcc.state.tx.us/water/quality/data/index.html

D. Contact

Give all the relevant information for the person whom TCEQ can contact if there are questions about any of the information on this form—perhaps the same person who completed the form.

E. Payment Information

Provide the number and account holder name from the check or money order used to pay the $100 application fee.

F. Certification

The operator must sign and date this statement to validate this NOI. Be sure to enter the full legal name of the person signing the form and the relevant title—for example, "Operator," "Vice-President," or "Partner." Use the "Prefix" blank for such titles as Dr., Mr., or Ms., as desired. Use the "Suffix" blank for such designations as Ph.D., Jr., Sr., III, or J.D., if applicable.

For a corporation, the application shall be signed by a responsible corporate officer. A responsible corporate officer means a president, secretary, treasurer, or vice-president of the corporation in charge of a principal business function, or any other person who performs similar policy or decision-making functions for the corporation; or the manager of one or more manufacturing, production, or operating facilities employing more than 250 persons or having gross annual sales or expenditures exceeding $25 million (in second-quarter 1980 dollars), if authority to sign documents has been assigned or delegated to the manager in accordance with corporate procedures. Corporate procedures governing authority to sign permit applications may provide for assignment or delegation to applicable corporate positions rather than to specific individuals.

For a partnership or sole proprietorship, the application shall be signed by a general partner or the proprietor, respectively.

For a municipality, state, federal, or other public agency, the application shall be signed by either a principal executive officer or a ranking elected official. For purposes of this application, a principal executive officer of a federal agency includes the chief executive officer of the agency, or a senior executive officer having responsibility for the overall operations of a principal geographic unit of the agency (e.g. regional administrator of the United States Environmental Protection Agency).

Questions?

If you have questions about any of the information on this form, contact our Storm Water Program at 512/239-4671 or look for "Storm Water" on our Web site:

www.tceq.state.tx.us

ATTACHMENT 2

CONSTRUCTION SITE NOTICE

FOR THE
Texas Commission on Environmental Quality (TCEQ)
Storm Water Program

TPDES GENERAL PERMIT TXR150000

The following information is posted in compliance with **Part II.D.2.** of the TCEQ General Permit Number TXR150000 for discharges of storm water runoff from construction sites. Additional information regarding the TCEQ storm water permit program may be found on the internet at:
www.tnrcc.state.tx.us/permitting/waterperm/wwperm/tpdestorm

Contact Name and Phone Number:	
Project Description: (Physical address or description of the site's location, estimated start date and projected end date, or date that disturbed soils will be stabilized)	
Location of Storm Water Pollution Prevention Plan :	

For Construction Sites Authorized Under Part II.D.2. (Obtaining Authorization to Discharge) the following certification must be completed:

I _____ (Typed or Printed Name Person Completing This Certification) certify under penalty of law that I have read and understand the eligibility requirements for claiming an authorization under Part II.D.2. of TPDES General Permit TXR150000 and agree to comply with the terms of this permit. A storm water pollution prevention plan has been developed and implemented according to permit requirements. A copy of this signed notice is supplied to the operator of the MS4 if discharges enter an MS4 system. I am aware there are significant penalties for providing false information or for conducting unauthorized discharges, including the possibility of fine and imprisonment for knowing violations.

_____ _____
Signature and Title Date

PAGE LEFT INTENTIONALLY BLANK

ATTACHMENT 3

TPDES OPERATOR'S INFORMATION

Owner's Name and Address: City of Houston

Mr. _____
(City Official)

_____
(Department)
P. O. Box 1562
Houston, Texas 77251-1562
(713) 247-1000

Contractors' Names and Addresses:

General Contractor: _____

Telephone: _____

Site Superintendent: _____

Telephone: _____

Erosion Control and
Maintenance Inspection: _____

Telephone: _____

Subcontractors' Names and Addresses:

_____ _____

_____ _____

_____ _____

_____ _____

Phone: _____ Phone: _____

Note: Insert name, address, and telephone number of person or firms

PAGE LEFT INTENTIONALLY BLANK

ATTACHMENT 4

CONTRACTOR'S / SUBCONTRACTOR'S

CERTIFICATION FOR TPDES PERMITTING

I certify under penalty of law that I understand the terms and conditions of TPDES General Permit No. TXR150000 and the Storm Water Pollution Prevention Plan for the construction site identified as part of this certification.

Signature: _____

Name: (printed or typed) _____

Title: _____

Company: _____

Address: _____

Date: _____

Signature: _____

Name: (printed or typed) _____

Title: _____

Company: _____

Address: _____

Date: _____

Signature: _____

Name: (printed or typed) _____

Title: _____

Company: _____

Address: _____

Date: _____

PAGE LEFT INTENTIONALLY BLANK

ATTACHMENT 5

EPA NPDES Construction Inspection Form

The following inspection is being performed in compliance with Part IV.D.4. of the NPDES Region 6 Storm Water Construction General Permit [63 Fed. Reg. 36502] and being retained in accordance with Part V of the Permit. Qualified personnel (provided by the permittee or cooperatively by multiple permittees) shall inspect disturbed areas of the construction site that have not been finally stabilized, areas used for storage of materials that are exposed to precipitation, placement and effectiveness of structural control measures, and locations where vehicles enter or exit the site. Inspections shall be performed at least once every 14 days and within 24 hours of the end of a storm event of 0.5 inches or greater. Where sites have been temporarily stabilized, runoff is unlikely due to winter conditions, or during seasonal arid periods in arid areas (0-10 inches of rainfall annually) and semi-arid areas (10-20 inches annually) such inspections shall be conducted at least once every month. This form is primarily intended for use with construction projects in Texas and New Mexico. Permittees on Indian Country lands in Oklahoma, Louisiana and Arkansas and some oil and gas facilities in Oklahoma may use this form if they are eligible for this permit. Other facilities need to check with their NPDES authority before using this form.

If you do not know your NPDES Permit Number, contact the NOI Processing Center at (301)495-4145. This form was prepared as an example and it is not a required form for use with the permit. Alternative forms may be used if they contain all of the required information as set forth in the permit. This form and additional information regarding the NPDES Region 6 storm water program may be found on the Internet at http://www.epa.gov/region6/sw/. Any person who has a complaint about the operation of this facility in regards to this permit should contact EPA Region 6 at (214)665-7112.

Permit Number(s) covered by this inspection (e.g. owners, developers, general contractor, builders)		
Signature and Certification in accordance with Part VI.G of the permit:	I certify under penalty of law that this document and all attachments were prepared under my direction or supervision in accordance with a system designed to assure that qualified personnel properly gathered and evaluated the information submitted. Based on my inquiry of the person or persons who manage the system, or those persons directly responsible for gathering the information, the information submitted is, to the best of my knowledge and belief, true, accurate, and complete. I am aware that there are significant penalties for submitting false information, including the possibility of fine and imprisonment for knowing violations. Signature_____ Date_____	
Date of Inspection		
Inspector Name		
Is there a copy of the permit language with the SWPPP?	❒ YES	❒ NO
Is the inspector qualified and are the qualifications documented in the SWPPP?	❒ YES	❒ NO
Is an NPDES storm water construction sign posted at the entrance for all permittees?	❒ YES	❒ NO

You may want to use EPA Region 6 construction checklist to assure components of the SWPPP are complete. This form, the construction sign, and the checklist are available on the Region 6 NPDES Storm Water Forms and Documents web page which may be found on the internet at http://www.epa.gov/earth1r6/6en/w/formsw.htm In addition to the checklist, you should provide a narrative (see next page) on the existing Best Management Practices and Structural Controls found during each inspection. Any problems identified in an inspection should be corrected within 7 days. The inspection should cover all components of the SWPPP and all potential pollutants. While eroded soil is the primary pollutant of concern, do not forget to inspect for other pollutant sources such as fuel tanks, paints, solvents, stabilization materials, concrete hardner, batch plants, and construction debris. The inspector will need to update the SWPPP to reflect findings of the inspection. The site map should be updated after an inspection to show controls that have been added or removed, to ensure the site map is kept current in accordance with Part I of the permit.

Revision 4, March 1, 2000

ATTACHMENT 5

Narrative Findings of the inspection:

Observations should include any findings of Best Management Practices or controls that are not in accordance with the SWPPP. If a control is not in place or failed, observe the reason why. A control removed temporarily for work is not necessarily a violation if properly recorded in the SWPPP. If it has been removed, record why it was removed and, if applicable, when it will be reinstalled. If the control has failed, observe the conditions so a conclusion may be made as to wether the control failed for improper maintenance or improper design. The qualified inspector will know when a failed control is inadequate and should be replaced by an improved control mechanism. Qualified inspectors are to have authority to make changes to the SWPPP to assure compliance. Controls that have not been installed should be given a reason why they are not installed and/or a scheduled date for installation if they are designed for a later phase of construction. After the inspection, the SWPPP and its site map should be updated to reflect current conditions of controls and Best Management Practices at the time of the inspection. This includes removing uninstalled controls from the site map or otherwise denoting on the site map if they are no longer installed if the controls have been removed because they are no longer necessary (e.g. stabilization has been achieved in that area).

ATTACHMENT 6

City of Houston

Storm Water Pollution Prevention Plan
Construction Site Inspection Report

TPDES/EPA Permit Number _____

COH Storm Water Quality Permit Number _____

DATE _____

No exceptions noted.

The following must be corrected prior to continuing work:

Public Notice improperly posted

Initial Construction Site Inspection Report information requires updating

Copy of NOI not on site

Storm water pollution prevention plan not on site

Erosion and sediment controls improperly installed

Erosion and sediment control devices improperly maintained

Fueling or washout areas not properly protected

Portocan or other sanitary facilities not properly protected

Self-inspection and maintenance records incomplete

Sediment from site outside area of construction

Other (see description below)

_____

_____

Please contact the Storm Water Quality Engineer at
611 Walker, RA-257, Houston TX 77002
713-837-7383 fax 713-837-0570

Once the above items have been corrected, call to arrange for reinspection. No further inspections for any construction related activity shall be made until the above items have been corrected.

_____	_____
Inspector's Signature	Contractor's Signature
_____	_____
Inspector's Name	Contractor's Name

not present

Distribution Stormwater Quality Engineer, Code Enforcement, Inspector, Operator
(Operator is Contractor)

Form _____ (10-01-

PAGE LEFT INTENTIONALLY BLANK

ATTACHMENT 7

Notice of Termination (NOT) for Storm Water Discharges Associated with Construction Activity under the TPDES Construction General Permit (TXR150000)

TCEQ Office Use Only
TPDES Permit Number: TXR15__|__|__|__|__| - NO
GIN Number: __|__ __|__ __|__|__|

For help completing this application, read the TXR150000 NOI Instructions (TCEQ-20023-Instructions).

A. TPDES Permit Number: TXR15_____

B. Construction Site Operator Customer Reference Number: CN_____
Name:_____
Mailing Address:_____
City:_____ State: --_____ Zip Code:_____
Country Mailing Information (*if outside USA*) Territory:_____ Country Code:_____ Postal Code:_____
Phone Number:_____ Extension:_____ Fax Number:_____
E-mail Address:_____

C. Project / Site Information Regulated Entity Reference Number: RN_____
Name:_____
Physical Address:_____
Location Access Description:_____
City:_____ County: --_____ Zip Code:_____

D. Contact - If the TCEQ needs additional information regarding this termination, who should be contacted?
Name:_____ Title:_____
Phone Number:_____ Extension:_____ Fax Number:_____
E-mail Address:_____

E. Certification

I certify under penalty of law that authorization under the TPDES Construction General Permit (TXR150000) is no longer necessary based on the provisions of the general permit. I understand that by submitting this Notice of Termination, I am no longer authorized to discharge storm water associated with construction activity under the general permit TXR150000, and that discharging pollutants in storm water associated with construction activity to waters of the U.S. is unlawful under the Clean Water Act where the discharge is not authorized by a TPDES permit. I also understand that the submittal of this Notice of Termination does not release an operator from liability for any violations of this permit or the Clean Water Act.

Construction Site Operator Representative:

Prefix:_____ First:_____ Middle:_____
Last:_____ Suffix:_____
Title:_____

Signature:_____ Date:_____

If you have questions on how to fill out this form or about the storm water program, please contact us at (512) 239-4671. Individuals are entitled to request and review their personal information that the agency gathers on its forms. They may also have any errors in their information corrected. To review such information, contact us at (512) 239-3282.

The completed NOT must be mailed to the following address:

Texas Commission on Environmental Quality
Storm Water & General Permits Team; MC - 228
P.O. Box 13087
Austin, Texas 78711-3087

TCEQ - 20023 (02/03) Page 1 of 1

PAGE LEFT INTENTIONALLY BLANK

ATTACHMENT 7

Completing the Notice of Termination for Storm Water Discharges Associated with Construction Activity under the TPDES Construction General Permit (TXR150000)

Who May File a Notice of Termination (NOT) Form
Permittees disturbing 5 acres or more (or part of a larger common plan of development or sale disturbing 5 acres or more) who are presently covered under the Texas Pollutant Discharge Elimination System (TPDES) Construction General Permit must submit a Notice of Termination (NOT) when final stabilization has been achieved on all portions of the site that is the responsibility of the permittee; or another permitted operator has assumed control over all areas of the site that have not been finally stabilized and all silt fences and other temporary erosion controls have either been removed, scheduled for removal as defined in the SWP3, or transferred to a new operator if the new operator has sought permit coverage. Erosion controls that are designed to remain in place for an indefinite period, such as mulches and fiber mats, are not required to be removed or scheduled for removal.

Final Stabilization occurs when either of the following conditions are met:

(a) All soil disturbing activities at the site have been completed and a uniform (e.g, evenly distributed, without large bare areas) perennial vegetative cover with a density of 70% of the native background vegetative cover for the area has been established on all unpaved areas and areas not covered by permanent structures, or equivalent permanent stabilization measures (such as the use of riprap, gabions, or goetextiles) have been employed.

(b) For individual lots in a residential construction site by either:

(1) the homebuilder completing final stabilization as specified in condition (a) above; or

(2) the homebuilder establishing temporary stabilization for an individual lot prior to the time of transfer of the ownership of the home to the buyer and after informing the homeowner of the need for, and benefits of, final stabilization.

(c) For construction activities on land used for agricultural purposes (e.g. pipelines across crop or range land), final stabilization may be accomplished by returning the disturbed land to its preconstruction agricultural use. Areas disturbed that were not previously used for agricultural activities, such as buffer strips immediately adjacent to a surface water and areas which are not being returned to their preconstruction agricultural use must meet the final stabilization conditions of condition (a) above.

A. TPDES Permit Number
Provide the TPDES permit number assigned to the operator of the construction site.

B. Construction Site Operator Information
Customer Reference Number
This number designates the operator's status as a TCEQ "customer"—in other words, an individual or business that is involved in an activity that we regulate. We assign each customer a number that begins with "CN," followed by nine digits. ***This is not a permit number, registration number, or license number.*** In the remainder of this section, we will use "this customer" to mean the operator for Part B of the form.

- If this customer has not been assigned a Customer Reference Number, leave the space for the Customer Reference Number blank.
- If this customer has already been assigned this number, enter the operator's Customer Reference Number.
- ***Do not enter a permit number, registration number, or license number in place of the Customer Reference Number.***

Name
Enter the legal name of this customer as authorized to do business in Texas. Include any abbreviations (LLC, Inc., etc.).

Mailing Address
Enter a central and general mailing address for this customer to receive mail from the TCEQ. For example, if this customer is a large company, this address might be the corporate or regional headquarters. On the other hand, for a smaller business, this address could be the same as the site address.

If this is a street address, please follow US Postal Service standards. In brief, these standards require this information in this order:

- the "house" number—for example, the 1401 in 1401 Main St
- if there is a direction before the street name, the one- or two-letter abbreviation of that direction (N, S, E, W, NE, SE, SW, or NW)
- the street name (if a numbered street, do not spell out the number—for example, 6th St, not Sixth St)
- an appropriate abbreviation of the type of street—for example, St, Ave, Blvd, Fwy, Exwy, Hwy, Cr, Ct, Ln
- if there is a direction after the street name, the one- or two-letter abbreviation of that direction (N, S, E, W, NE, SE, SW, or NW)
- if there is a room number, suite number, or company mail code

City, State, *and* ZIP Code
Enter the name of the city, the two-letter USPS abbreviation for the state (for example, TX), and the ZIP Code. (Enter the full ZIP+4 if you know it.)

ATTACHMENT 7

Country Mailing Information
If this address is ***outside*** the United States, enter the territory name, country code, and any non-ZIP mailing codes or other non–U.S. Postal Service features here. If this address is ***inside*** the United States, leave these spaces blank.

Phone Number *and* Extension
This number should correspond to this customer's mailing address given earlier. Enter the area code and phone number here. Leave "Extension" blank if this customer's phone system lacks this feature.

Fax Number
This number should correspond to this customer's mailing address given earlier. Enter the area code and fax number here.

E-mail Address
As with the mailing address, this should be a general address that is appropriate for e-mail to this customer's central or regional headquarters, if applicable.

C. Project / Site Information

Regulated Entity Reference Number
This number designates this site's status as a TCEQ "regulated entity"—in other words, a location where an activity that we regulate occurs. We assign each regulated entity a number that begins with "RN," followed by nine digits. ***This is not a permit number, registration number, or license number.***

- If this site has not been assigned a Regulated Entity Reference Number, leave the space for the Regulated Entity Reference Number blank.
- If this site has already been assigned this number, enter the Regulated Entity Reference Number.
- ***Do not enter a permit number, registration number, or license number in place of the Regulated Entity Reference Number.***

Name
Enter the name by which you want this site to be known to the TCEQ.

Physical Address
Enter the physical address of the site itself. TCEQ staff should be able to use this address to find the site.

Location Description
Enter a physical description of the location of the site based on highway intersections and/or permanent landmarks.

City, County, *and* ZIP Code
Enter the name of the city, the county, and the ZIP Code. (Enter the full ZIP+4 if you know it.)

D. Contact

Give all the relevant information for the person whom TCEQ can contact if there are questions about any of the information on this form—perhaps the same person who completed the form.

E. Certification

The operator must sign and date this statement to validate this NOI. Be sure to enter the full legal name of the person signing the form and the relevant title—for example, "Operator," "Operator's attorney," or "Senior Site Manager." Use the "Prefix" blank for such titles as Dr., Mr., or Ms., as desired. Use the "Suffix" blank for such designations as Ph.D., Jr., Sr., III, or J.D., if applicable.

For a corporation, the application shall be signed by a responsible corporate officer. A responsible corporate officer means a president, secretary, treasurer, or vice-president of the corporation in charge of a principal business function, or any other person who performs similar policy or decision-making functions for the corporation; or the manager of one or more manufacturing, production, or operating facilities employing more than 250 persons or having gross annual sales or expenditures exceeding $25 million (in second-quarter 1980 dollars), if authority to sign documents has been assigned or delegated to the manager in accordance with corporate procedures. Corporate procedures governing authority to sign permit applications may provide for assignment or delegation to applicable corporate positions rather than to specific individuals.

For a partnership or sole proprietorship, the application shall be signed by a general partner or the proprietor, respectively.

For a municipality, state, federal, or other public agency, the application shall be signed by either a principal executive officer or a ranking elected official. For purposes of this application, a principal executive officer of a federal agency includes the chief executive officer of the agency, or a senior executive officer having responsibility for the overall operations of a principal geographic unit of the agency (e.g. regional administrator of the United States Environmental Protection Agency).

Questions?

If you have questions about any of the information on this form, contact our Storm Water Program at 512/239-4671 or look for "Storm Water" on our Web site:
www.tceq.state.tx.us

Section 01422

REFERENCE STANDARDS

PART 1 G E N E R A L

1.01 SECTION INCLUDES

A. Section includes general quality assurance as related to Reference Standards and a list of references.

1.02 QUALITY ASSURANCE

A. For Products or workmanship specified by association, trade, or Federal Standards, comply with requirements of the standard, except when more rigid requirements are specified or are required by applicable codes.

B. Conform to reference standard by date of issue current on the date as stated in the General Conditions.

C. Request clarification from Project Manager before proceeding should specified reference standards conflict with Contract documents.

1.03 SCHEDULE OF REFERENCES

AASHTO	American Association of State Highway and Transportation Officials 444 North Capitol Street, N.W. Washington, DC 20001
ACI	American Concrete Institute P.O. Box 9094 Farmington Hills, MI 48333-9094
AGC	Associated General Contractors of America 333 John Carlyle Street Alexandria, VA 22314
AI	Asphalt Institute Research Park Drive P.O. Box 14052 Lexington, KY 40512

AITC	American Institute of Timber Construction 7012 S. Revere Parkway, Suite 140 Englewood, CO 80112
AISC	American Institute of Steel Construction One East Wacker Dr. Chicago, IL 60601
AISI	American Iron and Steel Institute 1101 17th Street NW, Suite 1300 Washington, DC 20036
ASME	American Society of Mechanical Engineers Three Park Avenue New York, NY 10016
ANSI	American National Standards Institute 1819 L Street NW Sixth Floor Washington, D.C. 20036
APA	American Plywood Association Box 11700 Tacoma, WA 98411
API	American Petroleum Institute 1220 L Street, N.W. Washington, DC 20005
AREA	American Railway Engineering and Maintenance-of-Way-Association 8201 Corporate Drive, Suite 1125 Landover, Maryland 20785
ASTM	American Society for Testing and Materials 100 Barr Harbor Drive West Conshohocken, PA 19428
AWPA	American Wood-Preservers' Association P.O. Box 5690 Granbury, TX 76049
AWS	American Welding Society 550 NW 42nd Avenue Miami, FL 33126

AWWA	American Water Works Association 6666 West Quincy Avenue Denver, CO 80235
COH	City of Houston P.O. Box 1562 Houston, TX 77251-1562
CLFMI	Chain Link Fence Manufacturers Institute 9891 Broken Land Parkway, Suite 300 Columbia, MD 21046
CRSI	Concrete Reinforcing Steel Institute 933 Plum Grove Road Schaumburg, IL 60173-4758
EJMA	Expansion Joint Manufacturers Association 25 North Broadway Tarrytown, NY 10591
FS	Federal Standardization Documents General Services Administration Specifications Unit (WFSIS) 7th and D Streets, S.W. Washington, DC 20406
ICEA	Insulated Cable Engineer Association P.O. Box 440 S. Yarmouth, MA 02664
IEEE	Institute of Electrical and Electronics Engineers 445 Hoes Lane P.O. Box 440 Piscataway, NJ 08855-459
ISA	International Society of Arboriculture P.O. Box 3129 Champaign, IL 61826-3129
MIL	Military Specifications General Services Administration Specifications Unit (WFSIS) 7th and D Streets, S.W. Washington, DC 20406

NACE	National Association of Corrosion Engineers 1440 South Creek Drive Houston, TX 77084-4906
NEMA	National Electrical Manufacturers' Association 1300 North 17th Street, Suite 1847 Rosslyn, VA 22209
NFPA	National Fire Protection Association 1 Batterymarch Park P.O. Box 9101 Quincy, MA 02269-9101
OSHA	Occupational Safety Health Administration U.S. Department of Labor Office of Public Affairs – Room N3647 Washington, DC 20210
PCA	Portland Cement Association 5420 Old Orchard Road Skokie, IL 60077-1083
PCI	Prestressed Concrete Institute 209 W. Jackson Blvd. Chicago, IL 60606
SDI	Steel Deck Institute P.O. Box 25 Fox River Grove, IL 60021
SSPC	Society for Protective Coatings (Steel Structures Painting Council) 40 24th Street, Sixth Floor Pittsburgh, PA 15222
TAC	Texas Administrative Code Texas Water Resources Conservation Commission P. O. Box 13087 Library MC-196 Austin, TX 78711-3087
TxDOT	Texas Department of Transportation 125 East 11th Street Austin, TX 78701-2483

UL	Underwriters' Laboratories, Inc. 333 Pfingston Road Northbrook, IL 60062
UNI-BELL	UNI-BELL Pipe Association 2655 Villa Creek Drive, Suite 155 Dallas, TX 75234

PART 2 P R O D U C T S - Not Used

PART 3 E X E C U T I O N - Not Used

END OF SECTION

Section 01450

CONTRACTOR'S QUALITY CONTROL

PART 1 G E N E R A L

1.01 SECTION INCLUDES

A. Quality assurance and control of Installation and manufacturers' field services and reports.

1.02 QUALITY ASSURANCE AND CONTROL OF INSTALLATION

A. Monitor quality control over Suppliers, manufacturers, Products, services, site conditions and workmanship, to produce work of specified quality at no additional cost to the City.

B. Comply fully with manufacturers' Installation instructions, including each step in sequence.

C. Request clarification from Project Manager before proceeding when manufacturers' instructions conflict with the Contract.

D. Comply with specified standards as minimum requirements for the Work except when more stringent tolerances, codes, or specified requirements indicate higher standards or more precise workmanship.

E. Perform the Work by persons qualified to produce a specified level of workmanship.

1.03 REFERENCES

A. Obtain copies of standards and maintain at job site when required by individual Specification sections.

1.04 MANUFACTURERS' FIELD SERVICES AND REPORTS

A. When specified in individual Specification sections, or as required by Project Manager, provide Product suppliers' or manufacturers' technical representative to observe site conditions, conditions of surfaces and Installation, quality of workmanship, start-up of equipment, operator training, testing, adjusting and balancing of equipment as applicable and to initiate required operation. Conform to minimum time requirements for start-up operations and operator training when provided in Specification sections.

B. At Project Manager's request, submit qualifications of manufacturers' representative to Project Manager 15 days in advance of required representatives' services. Representative is subject to approval by Project Manager.

C. Manufacturer's representatives shall report observations and site decisions or instructions given to applicators or installers that are supplemental or contrary to a manufacturer's written instructions. Submit report within 14 days of observation to Project Manager for review.

PART 2 P R O D U C T S - Not Used

PART 3 E X E C U T I O N - Not Used

END OF SECTION

Section 01452

INSPECTION SERVICES

PART 1 G E N E R A L

1.01 SECTION INCLUDES

A. Inspection services and references

1.02 INSPECTION

A. City Engineer will appoint an Inspector to represent the City and perform inspections, tests, and other services specified in individual Specification sections.

B. City Engineer may also appoint, employ, and pay an independent firm to provide additional inspection or construction management services as indicated in Section 01454 - Testing Laboratory Services.

C. The independent firm will submit reports to Project Manager, indicating observations and results of tests and indicating compliance or noncompliance with Contract requirements.

D. Contractor shall assist and cooperate with the Inspector; furnish samples of materials, design mix, equipment, tools, and storage.

E. Contractor shall notify Project Manager 24 hours prior to expected time for operations requiring services.

F. Contractor shall sign and acknowledge reports for Inspector.

PART 2 P R O D U C T S - Not Used

PART 3 E X E C U T I O N - Not Used

END OF SECTION

Section 01454

TESTING LABORATORY SERVICES

PART 1 G E N E R A L

1.01 SECTION INCLUDES

A. Testing laboratory services and Contractor responsibilities related to those services.

1.02 REFERENCES

A. ASTM C 1077 - Standard Practice for Laboratories Testing Concrete and Concrete Aggregates for Use in Construction and Criteria for Laboratory Evaluation.

B. ASTM D 3666 - Standard Specification for Minimum Requirements for Agencies Testing and Inspecting Bituminous Paving Materials.

C. ASTM D 3740 - Standard Practice for Minimum Requirements for Agencies Engaged in the Testing and/or Inspection of Soil and Rock as Used in Engineering Design and Construction.

D. ASTM E 329 - Standard Specification for Minimum Requirements for Agencies Engaged in the Testing and/or Inspection of Materials Used in Construction.

E. ISO/TEC Guide 25 - General Requirements for the Competence of Calibration and Testing Laboratories.

1.03 SELECTION AND PAYMENT

A. The City will select, employ, and pay for services of an independent testing laboratory to perform inspection and testing identified in Part 3 of individual Specification sections.

B. Contractor shall employ and pay for services of an independent testing laboratory or laboratories to perform inspection and testing identified in Part 2 of individual Specification sections.

C. Employment of a testing laboratory by the City shall not relieve Contractor of its obligation to perform work in accordance with requirements of Contract documents.

D. The City will deduct a minimum two-hour charge for testing laboratory time from periodic progress payment when operations requiring testing or inspection are canceled without prior notification.

E. The City will deduct cost of retesting from periodic progress payment whenever failed work is removed, replaced and retested.

1.04 QUALIFICATION OF LABORATORY

A. Meet laboratory requirements of ASTM E 329 and applicable requirements of ASTM C 1077, ASTM D 3666, and ASTM D 3740.

B. Meet ISO/TEC Guide 17025 conditions for accreditation by the American Association for Laboratory Accreditation (A2LA) in specific fields of testing required in individual Specification sections.

C. If laboratory subcontracts are part of the testing services, such work will be placed with a laboratory complying with the requirements of this Section.

1.05 LABORATORY REPORTS

A. Testing laboratory shall provide and distribute copies of laboratory reports to the distribution list Project Manager provides at the pre-construction conference.

B. Keep one copy of each laboratory report distributed or faxed at the site field office for duration of the Work.

C. Laboratory will fax material supplier, Contractor and Project Manager reports that indicate failing test results by no later than close of business on the working day following test completion and review.

1.06 LIMITS ON TESTING LABORATORY AUTHORITY

A. Laboratory may not release, revoke, alter, or enlarge requirements of the Contract.

B. Laboratory may not approve or accept any portion of the Work.

C. Laboratory may not assume Contractor duties.

D. Laboratory has no authority to stop the Work.

1.07 CONTRACTOR RESPONSIBILITIES

A. Provide safe access to the Work and to manufacturer's facilities for Project Manager and for testing laboratory personnel.

B. Provide testing laboratory with a copy of the Construction Schedule and a copy of each update to Construction Schedule.

C. Notify Project Manager and testing laboratory during normal working hours of the day previous to expected time for operations requiring inspection and testing services. When Contractor fails to make timely prior notification, do not proceed with the operations requiring inspection and testing services.

D. Notify Design Consultant 24 hours in advance when Specification requires presence of Design Consultant for sampling or testing.

E. Request and monitor testing as required to provide timely results and to avoid delays to the Work. Provide samples to laboratory in sufficient time to allow required test to be performed in accordance with specified test methods before intended use of the Product.

F. Cooperate with laboratory personnel in collecting samples on site. Provide incidental labor and facilities for safe access to the Work to be tested, to obtain and handle samples at site or at source of Products to be tested, and to facilitate tests and inspections including storage and curing of test samples.

G. Make arrangements with laboratory through Project Manager. Payment for additional testing will be made in accordance with Document 00700 - General Conditions:

1. Re-testing required for failed tests.

2. Re-testing for nonconforming work.

3. Additional sampling and tests requested beyond specified requirements.

4. Insufficient notification of cancellation of tests for work scheduled but not performed.

PART 2 P R O D U C T S - Not Used

\RT 3 E X E C U T I O N

3.01 CONDUCTING TESTING

A Conform to laboratory sampling and testing methods specified in individual Specification sections to the latest issues of ASTM standards, TxDOT methods, or other recognized test standards as approved by Project Manager.

B Requirements of this Section shall also apply to those tests for approval of materials, for mix designs, and for quality control of materials as performed by employed testing laboratories.

END OF SECTION

Section 01502

MOBILIZATION

PART 1 GENERAL

1.01 SECTION INCLUDES

A. Mobilization of construction equipment and facilities onto the site.

1.02 MEASUREMENT AND PAYMENT

A. Unit Price Contracts. If Contract is Unit Price Contract, measurement for mobilization is on a lump sum basis.

B. Stipulated Price (Lump Sum) Contract. If Contract is Stipulated Price Contract, payment for Work in this Section is included in total Stipulated Price.

C. Mobilization payments will be included in monthly payment estimates upon written application by Contractor subject to the following provisions:

1. Authorization for payment of 50 percent of that portion of Contract Price designated for mobilization will be made upon receipt and approval by Project Manager of the following items, as applicable:

   a. Safety Program (Document 00700, Paragraph 10.1.1).

   b. Site Utilization Plan (Section 01145).

   c. Schedule of Values (Section 01292), if any.

   d. Initial Construction Photographs (Section 01321), if needed.

   e. Preliminary Construction Schedule and Billing Forecast (Section 01325).

   f. Construction Schedule (Section 01325 or Section 01326, as applicable).

   g. Submittal Schedule (Section 01330).

   h. Site specific Storm Water Pollution Prevention Plan (SWPPP) and Notice of Intent (NOI) along with storm water application fee (Section 01410), if required.

   i. Contractor's Quality Control Plan (Section 01450), if required.

j. Establishment of a Field Office for Project Manager meeting requirements of Section 01520 - Temporary Field Office.

k. Traffic Control Plan (Section 01555), if required.

l. Plan for Control of Ground and Surface Water (Section 01578), if required.

m. Project Signs Submittal (Section 01580).

n. Trench Safety Program (Section 02260), if required.

o. Dewatering plan, when required.

2. Authorization for payment of the balance of that portion of Contract Price designated for mobilization will be made upon completion of the Work amounting to five percent of Original Contract Price. The amount of Contract Price designated for mobilization may not be applied in computing whether or not five percent of the Original Contract Price has been obtained.

3. Mobilization payments will be subject to retainage amounts stipulated in Document 00700 – General Conditions.

PART 2 P R O D U C T S -Not Used

PART 3 E X E C U T I O N -Not Used

END OF SECTION

Section 01504

TEMPORARY FACILITIES AND CONTROLS

PART 1 GENERAL

1.01 SECTION INCLUDES

A. Temporary facilities and necessary controls for the Project, including utilities, telephone, sanitary facilities, storage sheds and building, safety requirements, first aid equipment, fire protection, security measures, protection of the Work and property, access roads and parking, environmental controls, pest and rodent control and disposal of trash, debris and excavated material.

B. Facilities and controls specified in this section are considered minimum for the Project. Provide additional facilities and controls for proper execution of the Work and to meet Contractor's responsibilities for protection of persons and property.

1.02 MEASUREMENT AND PAYMENT

A. UNIT PRICES

1. No separate payment will be made for any temporary facilities and controls required under this section. Include cost of such work in contract price listed for mobilization.

1.03 CONTRACTOR'S RESPONSIBILITY

A. Comply with applicable requirements specified in other sections of Specifications.

1. Maintain and operate temporary facilities and systems to assure continuous service.

2. Modify and extend systems as the Work progress requires.

3. Completely remove temporary materials and equipment when no longer required.

4. Restore existing facilities used for temporary services to specified or original condition.

PART 2 PRODUCTS - NOT USED

PART 3 EXECUTION

3.01 TEMPORARY UTILITIES

A. Obtaining Temporary Service:

1. Make arrangements with utility service companies for temporary services.

2. Abide by rules and regulations of the utility service companies or authorities having jurisdiction.

3. Be responsible for utility service costs until Date of Substantial Completion. Included are fuel, power, light, heat, and other utility services necessary for execution, completion, testing, and initial operation of work.

B. Water:

1. Provide water required for and in connection with work to be performed and for specified tests of piping, equipment, devices, or for other use as required for proper completion of the Work.

2. Water to be drawn from public fire hydrants. Obtain transit meter from City of Houston, Department of Public Works and Engineering, Taps and Meters Section. Pay required deposit based on rates established by latest ordinance.

3. Provide and maintain an adequate supply of potable water for domestic consumption by Contractor personnel, Project Manager and representatives of the City.

C. Electricity and lighting:

1. Provide electric power service required for the Work including required testing, lighting, operation of equipment, and other Contractor use.

2. Electric power service includes temporary power or generators required to maintain plant operations during scheduled shutdowns.

3. Minimum lighting level shall be 10 foot-candles for open areas; 20-foot-candles for stairs and shops. Provide a minimum of one 300-watt lamp for each 200 square feet of work area.

D. Temporary Heat and Ventilation:

1. Provide temporary heat necessary for protection or completion of the Work.

2. Provide temporary heat and ventilation to assure safe working conditions; maintain enclosed areas at a minimum of 50 degrees F.

E. Telephone:

1. Provide emergency telephone service at Project site for use by Contractor personnel and others performing work or furnishing services at the site.

2. Provide Houston-Metro lines, allowing unlimited calls, without charge in Greater Houston Metropolitan area with "call waiting" and "call forwarding" options. Provide one telephone answering machine with beeperless remote message retrieval capability.

F. Sanitary Facilities:

1. Provide and maintain sanitary facilities for persons on the site; comply with regulations of State and local departments of health.

2. Enforce use of sanitary facilities by construction personnel at site. Enclose sanitary facilities. Pit-type toilets are not permitted. No discharge will be allowed from these facilities. Collect and store sewage and waste so as not to cause nuisance or health problems. Haul sewage and waste off-site and properly dispose in accordance with applicable regulations.

3. Locate toilets near the Work site and secluded from view insofar as possible. Keep toilets clean and supplied throughout the course of the Work.

3.02 STORAGE SHEDS AND BUILDINGS

A. Provide adequately ventilated, watertight storage facilities with floor above ground level for Products susceptible to weather damage.

B. Storage of Products not susceptible to weather damage may be on blocks off the ground.

C. Store Products in a neat and orderly manner. Place Products to permit easy access for identification, inspection and inventory.

D. Fill and grade site for temporary structures to provide drainage away from temporary and existing buildings.

3.03 SAFETY REQUIREMENTS

A. Submit a safety program at the pre-construction meeting and follow the program in accordance with Document 00700 – General Conditions. Include documented response to trench safety requirements of Section 02260 - Trench Safety System.

B. Conduct operations in strict accordance with applicable Federal, State and local safety codes and statutes and with good construction practice. Establish and maintain procedures for safety of all work, personnel and equipment involved in the Work.

C. Observe and comply with Texas Occupational Safety Act (Art. 5182a, V.C.S.) and with all safety and health standards promulgated by Secretary of Labor under Section 107 of Contract Work Hours and Standards Act, published in 29 CFR Part 1926 and adopted by Secretary of Labor as occupational safety and health standards under Williams-Steiger Occupational Safety and Health Act of 1970, and to other legislation enacted for safety and health of Contractor employees. Safety and health standards apply to Subcontractors and Suppliers as well as to the Contractor.

D. Observance of and compliance with safety regulations is Contractor's responsibility without reliance or superintendence of or direction by Project Manager. Immediately advise Project Manager of investigation or inspection by Federal Safety and Health inspectors of Contractor's or Subcontractor's work or place of work on site under the Contract, and after investigation or inspection, advise Project Manager of results. Submit one copy of accident reports to Project Manager within 10 days of occurrence.

E. Protect areas occupied by workmen using the best available devices for detection of lethal and combustible gases. Test devices frequently to assure functional capability. Constantly observe infiltration of liquids into the Work area for visual or odor evidence of contamination, and immediately take appropriate steps to seal off entry of contaminated liquids to the Work area.

F. Implement safety measures, including but not limited to safety personnel, first-aid equipment, ventilating equipment and other safety equipment specified or detailed on Drawings.

G. Maintain required coordination with City Police and Fire Departments during entire period covered by the Contract.

H. Include Project safety analysis in safety plan. Itemize major tasks and potential safety hazards. Plan to eliminate hazards or protect workers and public from each hazard.

3.04 FIRST AID EQUIPMENT

A. Provide a first aid kit throughout the construction period. List telephone numbers for physicians, hospitals, and ambulance services in each first aid kit.

B. Have at least one person thoroughly trained in first aid and CPR procedures present on the site when work is in progress. Contractor to conform to protocols and requirements for training and protection against "blood borne pathogens".

3.05 FIRE PROTECTION

A. Conform to specified fire protection and prevention requirements established by Federal, State, or local governmental agencies and as provided in Safety Program.

3.06 SECURITY MEASURES

A. Protect the Work, materials, equipment, and property from loss, theft, damage, or vandalism. Protect City property used in performance of the Contract.

B. If existing fencing or barriers are breached or removed for purposes of construction, provide and maintain temporary security fencing equal to existing.

3.07 PROTECTION OF UTILITIES AND PIPELINES

A. Prevent damage to existing public utilities during construction. Approximate locations of known utilities are shown on Drawings, but all lines may not be shown. Excavate with caution and repair lines damaged by construction operations.

B. Use the Utility Coordinating Committee One Call System, telephone number, (713) 223-4567, which must be called 48 hours in advance. The toll free telephone number is 1-800-669-8344, Texas One Call System.

C. Before excavating, locate underground utilities by appropriate means including the use of metal detection equipment, and probes, or by excavation or surveys. Repair damage caused by investigative work and by failure to locate or to preserve underground utilities.

D. Give utility owners a minimum five days notice before commencing excavation to allow time to locate utilities and make adjustments or

relocations when they conflict with the Work. Include cost for temporary relocation of water, wastewater, and storm drainage lines, necessary to accommodate construction, in unit prices for utility construction unless otherwise noted. Bypassing of sanitary waste to storm drainage facilities is not allowed.

E. Prior to excavation near pipelines, request a representative of the pipeline company to meet with Contractor and Project Manager at the site to discuss procedures to be used. Request pipeline company's representative to locate the pipelines in at least three locations: at each side and at centerline of proposed excavation of proposed utility. Also request representative and Project Manager to be present to observe Contractor operations when excavation is conducted within 15 feet of pipeline.

F. Utility service lines are not shown on the construction document drawings. Contractor should anticipate that such service lines exit and should exercise extreme caution during construction. The utility service lines should be repaired and restored immediately as per the specification, if damaged due to any construction activities. No separate payment will be made for this repair and restoration work. Include payment in unit price for work in appropriate sections.

G. Prior to abandonment of utility, make appropriate arrangements with City and owner of utility to terminate service, remove meters, tranformers, and poles as may be required by site conditions.

3.08 PROTECTION OF THE WORK AND PROPERTY

A. Preventive Actions

1. Take necessary precautions and actions to prevent damage, injury, or loss to the Work or public and private property, including:

   a. Storage of apparatus, supplies, and Products in an orderly, safe manner to limit interference with progress of the Work or work of other contractors, utility service companies, or the City's operations.

   b. Suitable storage for Products subject to damage by exposure to weather, theft, breakage, etc.

   c. Limitation of loading pressures imposed upon portions of the Work.

   d. Frequent clean up of refuse, scrap materials, and debris from construction operations, necessary to maintain the site in a safe and orderly condition.

e. Provision of barricades and guard rails to protect pedestrian and traffic around openings, scaffolding, temporary stairs and ramps, excavations, elevated walkways, and other hazardous areas.

2. Protect public and private property adjacent to the site. Obtain written consent before entering or occupying privately-owned land except on easements provided for construction. Restore property damaged by construction operations to condition equal to or better than that existing before the damage.

B. Barricades and Warning Systems

1. Where work is performed on or adjacent to roadways, rights-of-ways, or public land, provide barricades, fences, lights, warning signs, danger signals, and other precautionary measures necessary for protection of persons or property and for protection of the Work.

a. Erect sufficient barricades to keep vehicles and pedestrians from entering the Work. Paint barricades to be visible at night. From sunset to sunrise, provide at least one light at each barricade.

b. Maintain barricades, signs, lights, and provide watchmen until Project Manager approves removal. Whenever work creates encroachment onto public roadways, station flagmen to manage traffic flow in accordance with approved traffic control plan.

c. Conform to requirements of section 01555 – Traffic Control and regulation.

C. PROTECTION OF EXISTING STRUCTURES

1. Underground Facilities

a. Known Underground Facilities are shown on the Drawings but all Facilities may not be shown. Explore sufficiently ahead of trenching and excavation work to locate Underground Facilities in order to prevent damage to them and to prevent interruption of utility services. Restore damage to Underground Facilities to original condition at no additional cost to the City.

b. If necessary to avoid unanticipated Underground Facilities, Project Manager may make changes in location of the Work.

c. If permanent relocation of an Underground Facility is required

and not provided for in the Contract documents, City Engineer will direct Contractor in writing to perform the Work under Modification provisions in Document 00700 - General Conditions.

2. Surface Structures include buildings, tanks, walls, bridges, roads, dams, channels, open drainage, piping, poles, wires, posts, signs, markers, curbs, walks, guard cables, fencing, and other facilities that are visible above the ground level.

3. Protection of Underground Facilities and Surface Structures:

   a. Support in place and protect Underground Facilities and Surface Structures located within or adjacent to the limits of the Work from damage. Install supports as required by the owner of the structure. Satisfy Project Manager that the owner of the facility or structure has approved methods and procedures before installing structure supports.

   b. Avoid moving or changing public utility or private corporation property without prior written consent of a responsible official of the facility or structure. Allow representatives of utilities to enter the construction site for maintenance and repair purposes or to make necessary changes.

   c. Notify utility and pipeline owners and operators of the nature of construction operations and dates when operations will be performed. When construction operations are required in immediate vicinity of existing structures, pipelines, or utilities, give a minimum of five working days advance notice. Probe and flag location of Underground Facilities prior to commencement of excavation. Keep flags in place until construction operations uncover the facility.

   d. Assume risk for damages and expenses to Underground Facilities and Surface Structures within or adjacent to the Work.

D. Employ a structural engineer to ensure protection measures are adequate for the safety and integrity of structures and facilities.

E. PROTECTION OF INSTALLED PRODUCTS:

1. Provide protection of Installed Products to prevent damage from subsequent operations. Remove protection facilities when no longer needed, prior to completion of the Work.

2. Control traffic to prevent damage to Products and surfaces.

3. Provide coverings to protect Products from damage. Cover projections, wall corners, jambs, sills, and exposed sides of openings in areas used for traffic and passage of materials in subsequent work.

3.09 ROADS AND PARKING

A. Prevent interference with traffic and operations of the City on existing roads.

B. Designate temporary parking areas to accommodate construction and City personnel. When site space is not adequate, provide additional off-site parking. Locate as approved by Project Manager.

C. Minimize use by construction traffic on existing streets and driveways.

D. Do not allow heavy vehicles or construction equipment in existing parking areas.

3.10 ENVIRONMENTAL CONTROLS

A. Use methods, equipment, and temporary construction necessary for control of environmental conditions at the site and adjacent areas.

B. Comply with statutes, regulations, and ordinances relating to prevention of environmental pollution and preservation of natural resources including National Environmental Policy Act of 1969, PL 91-190, Executive Order 11514.

C. Minimize impact to the surrounding environment. Do not use construction procedures that cause unnecessary excavation and filling of terrain, indiscriminate destruction of vegetation, air or stream pollution, or harassment or destruction of wildlife.

D. Limit disturbed areas to boundaries established by the Contract. Do not pollute on-site streams, sewers, wells, or other water sources.

E. Do not burn rubbish, debris or waste materials.

3.11 POLLUTION CONTROL

A. Provide methods, means, and facilities necessary to prevent contamination of soil, water or the atmosphere by discharge of Pollutants from construction operations.

B. Provide equipment and personnel to perform emergency measures to contain spillage, and to remove contaminated soils or liquids. Excavate and dispose of contaminated earth off-site in accordance with laws and regulations, and

replace with suitable compacted fill and topsoil.

C. Provide systems necessary for control of Pollutants.

1. Prevent toxic concentrations of chemicals.

2. Prevent harmful dispersal of Pollutants into the environment.

D. Use equipment that conforms to current Federal, State, and local laws and regulations.

3.12 PEST AND RODENT CONTROL

A. Provide rodent and pest control as necessary to prevent infestation of construction or storage areas.

B. Employ methods and use materials that will not adversely affect conditions at site or on adjoining properties.

3.13 NOISE CONTROL

A. Provide vehicles, equipment, and use construction activities that minimize noise to the greatest degree practicable. Conform to noise levels of Chapter 30 –Noise and Sound Level Regulation, City Code of Ordinances, and latest OSHA standards. Do not permit noise levels to interfere with the Work or create a nuisance to surrounding areas.

B. Conduct construction operations during daylight hours except as approved by Project Manager.

C. Select construction equipment that operates with minimum noise and vibration. When directed by Project Manager, correct objectionable noise or vibration produced by operation of equipment at no additional cost to the City. Sound Power Level (PWL) of equipment shall not exceed 85 dbA (re: 10^{-12} watts) measured five feet from the equipment, or at a lower level if prescribed by City Ordinances. Equipment noise requirements are contained in equipment specifications.

3.14 DUST CONTROL

A. Use water or other methods approved by Project Manager to control amount of dust generated by vehicle and equipment operations.

3.15 WATER RUNOFF AND EROSION CONTROL

A. Comply with requirements of section 01410 – TPDES Requirements.

B. Conduct fill, grading and ditching operations and provide adequate methods necessary to control surface water, runoff, subsurface water, and water from excavations and structures in order to prevent damage to the Work, the site, or adjoining properties.

1. Plan and execute construction and earthwork by methods that control surface drainage from cuts and fills, and from borrow and waste disposal areas.

2. Minimize area of bare soil exposed at one time.

3. Provide temporary control measures, such as berms, dikes, and drains.

4. Provide, operate, and maintain equipment and facilities of adequate size to control surface water.

5. Construct fill and waste areas by selective placement of materials to eliminate erosion of surface silts or clays that may erode.

6. Direct water away from excavations, pits, tunnels, and other construction areas to prevent erosion, sedimentation or damage.

7. Maintain existing drainage patterns adjacent to the site by constructing temporary earth berms, sedimentation basins, retaining areas, and temporary ground cover.

8. Dispose of drainage water in a manner to prevent flooding, erosion, or other damage to the site or adjoining areas, in conformance with environmental requirements.

9. Inspect earthwork periodically to detect any evidence of erosion. Take corrective measures as required to control erosion.

END OF SECTION

Section 01506

DIVERSION PUMPING

PART 1 GENERAL

1.01 DEFINITIONS

A. Diversion-pumping: Installation and operation of bulkheads, plugs, hoses, piping, and pumps required to maintain sewer flow and prevent backups and overflows.

1.02 SYSTEM DESCRIPTION

A. Provides continuous sewer service to users of sewer systems while maintenance or construction operations are in progress, by diverting flow around construction locations. Maintain sewer flow to prevent backup or overflow onto streets, yards and unpaved areas or into buildings, adjacent ditches, storm sewers, and waterways. Do not divert sewage outside of sanitary sewer system.

B When pumps are operating, have an experienced operator on site to monitor operation, adjust pumps, make minor repairs to system, and report problems.

1.03 SUBMITTALS

A. Conform to requirements of Section 01330 - Submittals Procedures.

B. For systems that bypass sanitary sewer line segments of 42-inch diameter or larger, submit a Diversion Pumping Plan prior to installation. Show location, number and size of pumps, number, location, size and type of hoses or rigid piping, and location of downstream discharge; and special features where pipes or hoses cross roadways, temporary trenches, support bridges.

1.04 SCHEDULING

A. When the City operates or maintains diversion pumping in construction areas, coordinate construction activities with Project Manager.

B. Cease operation of diversion pumping when approved by Project Manager.

PART 2 PRODUCTS

2.01 MATERIALS

A. Design piping, joints and accessories to withstand at least twice maximum system pressure or 50 psi, whichever is greater.

B. Use self-priming type or submersible electric pumps, with a working pressure gauge on the discharge. Pumps shall meet requirements of City of Houston Noise and Sound Level Regulations.

PART 3 EXECUTION

3.01 FIELD QUALITY CONTROL

A. During diversion pumping, do not allow sewage to leak, dump, or spill into or onto areas outside of existing sanitary sewer systems.

B. In the event of an accidental spill or overflow, immediately stop discharge and take action to clean up and disinfect spill. Promptly notify Project Manager so required reporting can be made to the Texas Commission on Environmental Quality (TCEQ) and the Environmental Protection Agency (EPA).

3.02 CLEANING

A. When diversion-pumping operations are complete, drain sewage within piping into sanitary sewers prior to disassembly.

END OF SECTION

Section 01520

TEMPORARY FIELD OFFICE

PART 1 GENERAL

1.01 SECTION INCLUDES

A Temporary field office building and associated parking area.

1.02 FACILITY DESCRIPTION

A Temporary field office to be utilized by authorized representatives of the City to coordinate and monitor daily construction activities performed by Contractor.

B. Field office shall be a non-smoking facility.

PART 2 PRODUCTS

2.01 FIELD OFFICE

A General:

1. Locate office in vicinity of the Work at a location approved by Project Manager or where indicated on Drawings.

2. Furnish, Install and maintain field office for exclusive use of authorized representatives of the City. Provide sufficient room for Project meetings and Inspector's office.

3. Provide office within 10 days of Date of Commencement of the Work.

4. Construct two all-weather, hard surfaced parking spaces for exclusive use of authorized representatives of the City. Provide all-weather surfaced walk between parking spaces and field office.

B. Minimum Construction:

1 Structurally sound foundation and superstructure.

Weather tight with insulated roof, walls and 7-foot ceiling (minimum).

3. Stairs or walkway with handrail and covered entrance platform (minimum 4 feet by 4 feet) with mud scraper at door.

4. Resilient floor covering.

5. Screened windows with area equal to approximately 10 percent of floor area sufficient for light, view of the site, and ventilation. Provide each window with operable sash and burglar bars.

6. Secure exterior doors with dead-bolt cylinder locks and burglar bars.

C. Minimum Services:

1. Exterior entrance light.

2. Interior lighting of 75 foot-candles minimum at desktop height

3. Automatic heating to maintain 65 degrees F in winter.

4. Automatic cooling to maintain 75 degrees F in summer.

5. Electric power service.

6. Three telephone service lines one for voice, one for data, and one for fax, for exclusive use of authorized representatives of the City.

7. Sanitary facilities in field office with one water closet, one lavatory, and one medicine cabinet for exclusive use of authorized representatives of the City.

D. Minimum Furnishings:

1. One 5-drawer desk

2. Two swivel desk chairs with casters.

3. One plan table.

4. One drawing plan rack.

5. One 4-drawer legal file cabinet complete with fifty legal-size hanging folders and two full-sized carriers.

6. One marker board with cleaner and markers.

7. Two waste baskets.

8. One 30-inch by 36-inch tack board.

9. One all-purpose fire extinguisher.

10. Six protective helmets (hard hats) with ratchet adjustment for exclusive use of authorized representatives of the City.

11. Conference table and chairs to accommodate 10 persons.

12. All in one printer, copier, plain paper fax machine.

13. Telephone instrument separate from fax machine.

E. Provide adequate space for one set of Contract documents for ready reference.

PART 3 EXECUTION

3.01 MAINTENANCE

A Maintain all-weather surface driveway and parking areas, buildings, walkways, stairs and required furnishings and equipment for duration of the Contract.

B. Provide janitorial services for duration of the Contract consisting of twice weekly sweeping and mopping floors, trash removal, weekly restroom cleaning, and weekly dusting of furniture and equipment.

C. Provide soap, paper towels, toilet paper, cleansers and other necessary consumables.

D. Immediately repair damage, leaks or defective service.

3.02 PROJECT CLOSEOUT

A Remove temporary field office and signs and restore site as specified in Section 01770 - Closeout Procedures.

END OF SECTION

SECTION 01554

TRAFFIC CONTROL AND STREET SIGNS

PART 1 GENERAL

1.01 SECTION INCLUDES

A. Materials, hardware and installation of Traffic Signs.

1.02 SUBMITTALS

A. Contractor shall submit a list of intended suppliers and products to be used for all signs, posts, and associated hardware. City reserves the right to request actual product samples prior to approval.

1.03 MEASUREMENT AND PAYMENT

A. Signs installed or replaced will be measured by the each sign. Signs refurbished will be measured by each sign.

B. Payment for installation of traffic signs will be on the basis of each sign installed.

C. The price is full compensation for furnishing and installing new signs and hardware. Cost of associated posts, footings, and miscellaneous mounting hardware will not be paid for directly but is to be included in the unit price bid for installation of each traffic sign.

D. Non-standard signs installed or replaced will be measured by the square foot of the sign face. Non-standard signs shall not be installed without prior approval from the City.

PART 2 PRODUCTS

2.01 MATERIALS

A. The following ASTM Standards and documents, of the issue in effect on the date of Invitation for Bid, form a part of this specification to the extent herein.

1. ASTM B 209 Specification for Aluminum and Aluminum Alloy Sheet and Plate

2. ASTM D 523 Standard Method for Test for Specular Gloss

3. ASTM D 4956 Standard Specification for Retroreflective Sheeting for Traffic Control

4. ASTM E 284 Standard Definition of Terms Relating to Appearance of Materials

5. ASTM E 308 Computing the Colors of Objects by Using the CIE System

6. ASTM E 810 Standard Test Method for Coefficient of Retroreflection of Retroreflective Sheeting

7. ASTM E 1164 Standard Practice for Obtaining Spectrophotometric Data for Object-Color Evaluation

B. Substrate (Sign Blanks). This shall be aluminum alloy 5052-H38 and otherwise in conformance with ASTM B-209 and have gold chromate finish. The size, shape and thickness of the sign blanks are as indicated on the standard detail sheet in the plans or as specified by the Engineer.

1. Metal working. The aluminum shall be free of burrs and pits on both sides, including
edges and holes, and shall be made ready for applications of the sheeting.

2. Surface Preparation. The aluminum shall be thoroughly cleaned and degreased with solvent and alkaline emulsions cleaner by immersion, spray, or vapor degreasing and dried prior to application of the gold chromate sheeting coat. The aluminum shall be new and corrosion-free with holes drilled or punched, corners rounded to the radii shown in the standard detail sheet, and all edges smoothed prior to application of sheeting. The heavy or medium chromate coating shall conform in color and corrosion resistance to that imparted by the Alodine 1200F treatment.

3. Size. The dimensions of substrate applications for regulatory, warning, and guide signs shall be as specified by the Engineer and as shown on the plans.

C. Sign Face (Background, Legends, Symbols, and Colors). These shall be in accordance with the Standard Highway Sign Designs (SHSD) for Texas and with the Texas Manual of Uniform Traffic Control Devices (TMUTCD).

1. The sign face, made of electronic film and retro-reflective sheeting shall comply with the appearance, specification, and good workmanship designated by the using agency for sign faces constructed of screen processed retro-reflective sheeting of the same type.

2. All sign blanks shall be covered with appropriate retro-reflective sheeting.

   a. All ground mounted stop signs, warning signs, and other regulatory signs, shall use at a minimum High Intensity Prismatic Reflective Sheeting.

   b. All overhead signs shall use Diamond Grade Reflective Sheeting.

   c. All other signs shall use Super Engineer Grade Sheeting

3. Application Methods. The method of application of sheeting, letters, numbers, and symbols shall be precisely as prescribed in writing by the manufacturer.

   a. Legend Spacing and Layout. Spacing and layout for all traffic control signs shall conform to the SHSD.

   b. Tolerance for Horizontal Alignment. Letters, numerals, and symbols shall be horizontally aligned to a tolerance of 1/16 inch.

   c. Tolerance for Vertical Alignment. Letters, numerals, and symbols shall be vertically aligned to a tolerance of 1/16 on each letter in each line.

D. Sign Posts. Steel post shall conform to the standard specification for hot rolled carbon sheet steel, structural quality, ASTM designation A570, Grade 50. Average minimum yield strength after cold forming is 60,000 psi. The cross section of the post shall be square tube formed steel, carefully rolled to size and shall be welded directly in the corner by high frequency resistance welding or equivalent process and externally scarified to agree with corner radii. Sign posts shall be hot dipped galvanized conforming to ASTM A653, G90.

1. Installation. The square end of the post shall not be modified or pointed.

   a. Flange. When sign post installation is required over building basements, bridges and cavities, a galvanized cast iron pipe flange shall be used. The base shall be 8 inches in diameter with six 5/16 inch holes drilled equidistant around the circumference, ⅝ inch from the outer edge. The neck of the flange shall be 3inches in diameter, drilled and threaded to receive a 2 inch diameter galvanized post.

   b. Hardware. All ground mounted signs shall be attached to posts using 5/16" nut and bolt assembly, the bolt being 2 ½" in length. Stainless steel banding material, brackets and clips will be used for signs installed on light standards or mast arms.

c. Construction. Anchors shall be anchored in a minimum of one cubic foot of class "C" concrete, 28 inches deep, with a 6 inch long, ⅜ inch diameter pin inserted through the pre-drilled hole 3 inches from the bottom of the pole. Where the pole installation requires surface mounting, an 8 inch flange with a 2 inch threaded collar shall be used. The pole shall be galvanized, two inches in diameter and threaded to fit the flange. Sign placement and orientation shall be as specified in the construction plans.

E. Each finished sign shall have the following sticker affixed to the back in a location where it will be visible when the sign is installed:

The sticker shall be Zebra Technologies Z-Ultimate 3000 White or approved equal. Finished product shall be weather and fade resistant for the expected life of the sign.

F. Warranty. The Contractor shall warrant the materials and workmanship of each sign in accordance with the maximum limits of material warranties extended by manufacturers of raw materials, subject to the conditions they specify. The retro-reflective sheeting will be considered unsatisfactory if it has deteriorated due to natural causes to the extent that: (1) the sign is ineffective for its intended purpose when viewed from a moving vehicle under normal day and night driving conditions; or (2) the coefficient of retro-reflection is less than the minimum specified for that sheeting. When sign failure occurs prior to the minimum years indicated and an inspection demonstrates that the failure is caused by materials warranted to contractor to endure at least that long, the sign will be replaced or repaired free of materials charges. When failure occurs and inspection demonstrates that such failure is due to poor workmanship, the sign will be replaced or repaired at Contractor's expense, including shipping charges.

PART 3 EXECUTION

3.01.1 EQUIPMENT

A. The contractor shall provide machinery, tools, and equipment necessary for proper execution of the work.

3.01.2 CONSTRUCTION

A. Construction shall be high quality with no visible defects in the finished product. Fabrication shall be in accordance with these specifications. Street name signs shall always be supplied and installed at each project intersection whether signs previously existed at the location or not.

B. The removal of existing signs shall be coordinated with the Traffic Operations Section of the Public Works Department (713-803-3054) and arrangements made for a convenient time to deliver City signs and poles. All salvaged traffic signs shall be delivered to the Traffic Operations Center located at 2200 Patterson Street. All deliveries to the Traffic Operations Center requires a minimum notice of two (2) working days prior to returning or delivering any sign and/or sign related material.

3.03 RESPONSIBILITIES

A. The contractor is responsible for providing and supplying aluminum traffic signs covered with retro-reflective sheeting, applying standard legends (or special legends if shown in the plans) to the covered sign blanks, galvanized steel sign poles, pole anchors, all hardware for installing the signs and poles, and for installing traffic signs, poles and anchors as shown in the plans or call for in the contract documents, complete and ready for field installations.

END OF SECTION

Section 01555-S

TRAFFIC CONTROL AND REGULATION

1.02 MEASUREMENT AND PAYMENT

A. Unit Prices: *Delete subparagraph 2 and 2b replace with the following.*

2. Payment for traffic control for wastewater or water line projects will be authorized by Project Manager in three (3) parts. Partial payment will be made according to following schedule:

   b. A payment of 50 percent of traffic control amount will be authorized when pavement replacement commences. This limiting percentage will be prorated based upon linear footage, as measured along centerline axis of wastewater or water line, of pavement replaced.

END OF SUPPLEMENT

Approved by:

J. Timothy Lincoln, P.E.
Office of the City Engineer
Planning and Development Service Division

10/4/13
Date

Section 01555

TRAFFIC CONTROL AND REGULATION

PART 1 GENERAL

1.01 SECTION INCLUDES

A. Requirements for signs, signals, control devices, traffic barriers, flares, lights and traffic signals; construction parking control, designated haul routes, and bridging of trenches and excavations.

B. Qualifications and requirements for use of flagmen.

1.02 MEASUREMENT AND PAYMENT

A. Unit Price Contracts.

1. Traffic control and regulation. Payment for traffic control and regulation is on a lump sum basis. Include preparation and submittal of traffic control plan if different than shown on Drawings, and provision of traffic control devices, equipment, and personnel necessary to protect the Work and public. Payment will be based on Contractor's Schedule of Values for traffic control and regulation.

2. Payment for traffic control will be authorized by Project Manager in three (3) parts. Partial payment will be made according to following schedule:

   a. Payment of 25 percent of traffic control amount will be authorized when permanent control devices and necessary temporary markings, sufficiently deployed along job site as required to maintain progress of work, are installed at job site and approved. This limiting percentage will be prorated based upon extent of Contractor's setup.

   b. A payment of 50 percent of traffic control amount will be authorized when pavement replacement commences. This limiting percentage will be prorated based upon linear footage, as measured along centerline axis of water main, of pavement replaced.

   c. A payment of 25 percent of traffic control amount will be authorized when permanent pavement markings are restored and all unnecessary permanent and temporary control devices removed. This limiting percentage will be prorated based upon the extent of restoration.

3. Flagmen: Measurement is on a lump sum basis for flagmen as required for the project. The amount invoiced shall be determined based on the schedule of value submitted for flagmen.

4. New Portable Concrete Low Profile Traffic Barrier Provided. Payment is on a unit price basis for each linear foot of low profile traffic barrier provided, installed with hardware assemblies and connected together in accordance with the approved traffic control plan.

5. Portable Concrete Low Profile Traffic Barrier picked up from City of Houston Stockpile. Payment is on a unit price basis for each linear foot of low profile traffic barrier picked up from designated stockpile, moved onto the project, set at location and connected together.

6. Portable Concrete Low Profile Traffic Barrier Installed. Payment is on a unit price basis for each linear foot of low profile traffic barrier delivered to the project location, installed with hardware assemblies and connected together in accordance with the approved traffic control plan.

7. Portable Concrete Low Profile Traffic Barrier Moved and Reset. Payment is on a unit price basis for each linear foot of low profile traffic barrier disassembled, moved on the project, reset at the new locations and connected together. Include cost to repair roadway in the unit price.

8. Portable Concrete Low Profile Traffic Barrier Removed. Payment is on a unit price basis for each linear foot of low profile traffic barrier removed from the project, including hardware assemblies, and stockpiling at location listed in Section 01110 – Summary of Work. Include cost to repair roadway in the unit price.

9. Refer to Section 01270 - Measurement and Payment for unit price procedures.

B. Stipulated Price Contracts. Include payment for work under this section in the total Stipulated Price.

1.03 REFERENCES

A. Texas Manual on Uniform Traffic Control Devices (TMUTCD)

B. Article 4413 (29bb), commonly referred to as Private Investigators and Private Security Agencies Act, and Article 2.12, Texas Code of Criminal Procedure.

C. Code of Ordinances, City of Houston, Texas.

1. Chapter 10 Buildings And Neighborhood Protection, Article X Cleanup After Demolition Or Removal Of Structures

2. Chapter 40 Streets and Sidewalks, Article XVII Pedestrian Way Impairments

1.04 SUBMITTALS

A. Conform to requirements of Section 01330 - Submittal Procedures.

B. Traffic control plan:

1. If using traffic control plan contained in the Contract without modification, submit a letter confirming use of the plan.

2. If using a different traffic control plan, submit the plan for approval. The plan must conform to TMUTCD requirements and be sealed by a Registered Texas Professional Engineer.

C. Submit copies of approved lane closure permits issued by City Traffic Engineering Branch.

D. Submit Schedules of Values for traffic control plan and flagmen within 30 days following Notice to Proceed.

E. Submit records verifying qualifications of Uniformed Peace Officers and Certified Flagmen proposed for use on the Work.

F. When working in the central business district, submit copies of approved Pedestrian Way permits issued by the City's Traffic Engineering Branch.

1.05 FLAGMEN

A. Use Uniformed Peace Officers and Certified Flagmen to control movement of vehicular and pedestrian traffic when construction operations encroach on public traffic lanes. Unless otherwise approved by Project Manager, use Uniformed Peace Officer for work along major thoroughfares, schools, churches, hospitals and Work at signalized intersections.

B. Uniformed Peace Officer: Individual employed full-time as a peace officer who receives separate compensation as a privately employed flagman. Private employment may be an employee-employer relationship or on an individual basis. Flagman may not be in the employ of another peace officer nor be a reserve peace officer.

1. Uniformed Peace Officers may be:

   a. sheriffs and their deputies;

   b. constables and deputy constables;

   c. marshals or police officers of an incorporated city, town or village; or

   d. as otherwise provided by Article 2.12, Code of Criminal Procedure.

2. The Uniformed Peace Officer must be a full-time peace officer, must work a minimum average of 32 paid hours per week, and must be paid a rate not less than the prevailing minimum hourly wage rate set by the federal Wage and Hour Act. The individual must be entitled to vacation, holidays, and insurance and retirement benefits.

C. Certified Flagman: Individual who receives compensation as a flagman and meets the following qualifications:

1. Formally trained and certified in traffic control procedures by the City s E. B. Cape Center.

2. Speaks English. Ability to speak Spanish is desirable but not required.

3. Paid for flagman duty at an hourly rate not less than the wage rate set for Rough Carpenter under the City's Wage Scale for Engineering Construction.

D. Certified Flagmen must wear a distinctive uniform, bright-colored vest, and be equipped with appropriate flagging and communication devices while at the Work site. They must also have in their possession while on duty, a proof of training identification card issued by the appropriate training institute.

PART 2 P R O D U C T S

2.01 SIGNS, SIGNALS, AND DEVICES

A. Comply with TMUTCD requirements.

B. Traffic cones and drums, flares and lights: Conform to local jurisdictions' requirements.

C. When working in the Central business district, provide pedestrian pathway

signage approved by the City's Traffic Engineering Branch.

2.02 PORTABLE LOW PROFILE CONCRETE BARRIERS

A. The low profile concrete barrier is a patented design. Information concerning this barrier may be obtained from Texas Transportation Institute, Texas A&M University System, College Station, Texas 77843-3135, (409) 845-1712.

PART 3 E X E C U T I O N

3.01 PUBLIC ROADS

A. Submit requests forms for lane closure and sidewalk closure to the City's Traffic Engineering Branch at least three working days prior to need for blocking vehicular lanes or sidewalks. Do not block lanes or sidewalks without approved permits. Obtain application from the City's Traffic Engineering Branch at 611 Walker, 5th floor or at the following internet address: http://www.ci.houston.tx.us/pwe/mrow/laneclosure.htm.

B. Follow laws and regulations of governing jurisdictions when using public roads. Pay for and obtain permits from jurisdiction before impeding traffic or closing lanes. Coordinate activities with Project Manager.

C. Give Project Manager one-week notice before implementing approved traffic control phases. Inform local businesses of impending traffic control activities.

D. Notified police department, fire department, METRO, and local schools, churches, and businesses in writing a minimum of five business days prior to beginning work.

E. Maintain 10-foot wide all-weather lanes adjacent to the Work for emergency vehicle use. Keep all-weather lanes free of construction equipment and debris.

F. Do not to obstruct normal flow of traffic from 7:00 a.m. to 9:00 a.m. and 4:00 p.m. to 6:00 p.m. on designated major arterials or as directed by Project Manager.

G. Maintain local driveway access to residential and commercial properties adjacent to work areas at all times. Use all-weather materials approved by Project Manager to maintain temporary driveway access to commercial and residential driveways.

H. Keep streets entering and leaving job site free of excavated material, debris, and foreign material resulting from construction operations in compliance with

applicable ordinances.

I. Remove existing signage and striping that conflict with construction activities or that may cause driver confusion.

J. Provide safe access for pedestrians along major cross streets.

K. Alternate closures of cross streets so that two adjacent cross streets are not closed simultaneously.

L. Do not close more than two consecutive esplanade openings at a time without prior approval from Project Manager.

3.02 CONSTRUCTION PARKING CONTROL

A. Control vehicular parking to prevent interference with public traffic and parking, access by emergency vehicles, and the City's operations.

B. Monitor parking of construction personnel's vehicles in existing facilities. Maintain vehicular access to and through parking areas.

C. Prevent parking on or adjacent to access roads or in non-designated areas.

3.03 FLARES AND LIGHTS

A. Provide flares and lights during hours of low visibility to delineate traffic lanes and to guide traffic.

3.04 HAUL ROUTS

A. Utilize haul routes designated by authorities or shown on drawings for construction traffic.

B. Confine construction traffic to designated haul routes.

C. Provide traffic control at critical areas of haul routes to regulate traffic and minimize interference with public traffic.

3.05 TRAFFIC SIGNS AND SIGNALS

A. Construct necessary traffic control devices for temporary signals required to complete the Work including loop detectors, traffic signal conduits, traffic signal wiring and crosswalk signals. Notify the City's Traffic Engineering Branch a minimum of 60 days in advance of need for control boxes and switchgear. The City will perform necessary service, programming or adjustments, to signal boxes and switchgear if required during construction.

B. Install and operate traffic control signals to direct and maintain orderly traffic flow in areas under Contractor's control affected by Contractor's operations. Post notices, signs and traffic controls before moving into next phase of traffic control.

C. Relocate traffic signs and signals as the Work progresses to maintain effective traffic control.

D. Unless otherwise approved by Project Manager, provide driveway signs with name of business that can be accessed from each crossover. Use two signs for each crossover.

E. Replace existing traffic control devices in Project area.

F. Project Manager may direct Contractor to make minor adjustments to traffic control signage to eliminate driver confusion and maintain orderly traffic flow during construction at no additional cost to the City.

3.06 BRIDGING TRENCHES AND EXCAVATIONS

A. When necessary, construct bridges over trenches and excavation to permit an unobstructed flow of traffic across construction areas and major drives. Use steel plates of sufficient thickness to support H-20 loading and install to operate with minimum noise.

B. Shore trench or excavation to support bridge and traffic.

C. Secure bridging against displacement with adjustable cleats, angles, bolts or other devices when:

1. bridging is placed over existing bus routes,

2. more than five percent of daily traffic is comprised of commercial or truck traffic,

3. more than two separate plates are used for bridging, and

4. when bridge is to be used for more than five consecutive days.

D. Extend steel plates used for bridging a minimum of 1 foot beyond edges of trench or excavation. Use temporary paving materials such as premix to feather edges of plates to minimize wheel impact on secured bridging.

3.07 REMOVAL

A. Remove equipment and devices when no longer required.

B. Repair damage caused by installation.

C. Remove post settings to a depth of 2 feet.

3.08 TRAFFIC CONTROL, REGULATION AND DIRECTION

A. Use Flagmen to control, regulate and direct an even flow and movement of vehicular and pedestrian traffic, for periods of time as may be required to provide for public safety and convenience, where:

1. multi-lane vehicular traffic must be diverted into single lane vehicular traffic,

2. vehicular traffic must change lanes abruptly,

3. construction equipment must enter or cross vehicular traffic lanes and walks,

4. construction equipment may intermittently encroach on vehicular traffic lanes and unprotected walks and crosswalk,

5. traffic regulation is needed due to rerouting of vehicular traffic around the Work site, and

6. where construction activities might affect public safety and convenience.

B. Use of Flagmen to assist in the regulation of traffic flow and movement does not relieve Contractor of responsibility to take other means necessary to protect the Work and public.

3.09 INSTALLATION STANDARDS

A. Place temporary pavement for single lane closures, in accordance with TMUTCD.

B. Reinstall temporary and permanent pavement markings as approved by Project Manager. When weather conditions do not allow application according to manufacturer's requirements, alternate markings may be considered. Submit proposed alternate to Project Manager for approval prior to installation. No additional payment will be made for use of alternate markings.

3.10 MAINTENANCE OF EQUIPMENT AND MATERIAL

A. Submit name, address and telephone number of individual designated to be

responsible for maintenance of traffic handling at construction site to Project Manager. Individual must be accessible at all times to immediately correct deficiencies in equipment and materials used to handle traffic including missing, damaged, or obscured signs, drums, barricades, or pavement markings.

B. Inspect signs, barricades, drums, lamps and temporary pavement markings daily to verify that they are visible, in good working order, and conform with traffic handling plans as approved by Project Manager. Immediately repair, clean, relocate, realign, or replace equipment or materials that are not in compliance.

C. Keep equipment and materials, signs and pavement markings, clean and free of dust, dirt, grime, oil, mud, or debris.

D. Obtain approval of Project Manager to reuse damaged or vandalized signs, drums, and barricades.

END OF SECTION

Section 01562

TREE AND PLANT PROTECTION

PART 1 GENERAL

1.01 SECTION INCLUDES

A. Tree and plant protection.

B. Minimum qualifications of Arborist and Urban Forester.

1.02 MEASUREMENT AND PAYMENT

A. Payment for Tree Protection, including tree pruning or tree removal, shall be paid as a Lump Sum basis that shall include all items specified in this section unless payment is specified otherwise in this section

B Payment for Zero Curb Cutback will be on a per linear foot basis.

C. Payment for Checker Plate will be on a square foot basis.

D. Refer to Section 01270-Measurement and Payment for unit price procedures.

1.03 SUBMITTALS

A. Conform to requirements of Section 01330 – Submittal Procedures.

B. Submit name and experience of qualified Arborist, proposed for use on the Work, to Project Manager.

1.04 PROJECT CONDITIONS

A. Preserve and protect existing trees and plants to remain from foliage, branch, trunk, or root damage that could result from construction operations.

B. Prevent following types of damage:

1. Compaction of root zone by foot or vehicular traffic, or material storage.

2. Trunk damage from equipment operations, material storage, or from nailing or bolting.

3. Trunk and branch damage caused by ropes or guy wires.

4. Root or soil contamination from spilled solvents, gasoline, paint, lime slurry, and other noxious materials.

5. Branch damage due to improper pruning or trimming.

6. Damage from lack of water due to:

   a. Cutting or altering natural water migration patterns near root zones.

   b. Failure to provide adequate watering

7. Damage from alteration of soil pH factor caused by depositing lime, concrete, plaster, or other base materials near roots zones.

8. Cutting of roots larger than one inch in diameter.

1.05 DAMAGE ASSESSMENT

A. When trees other than those designated for removal are destroyed or damaged as result of construction operations, remove and replace with same size, species, and variety up to and including 8 inches in trunk diameter. Trees larger than 8 inches in diameter shall be replaced with an 8 inch diameter tree of the same species and variety and total contract amount will be reduced by an amount determined from the following formula and paid to Tree Fund 0.7854 x D2 x $13.25 where D is diameter in inches of tree or shrub trunk measured 12 inches above grade for that portion of the tree which is greater than 8 inches in diameter. A permit must be applied for and approved by the City of Houston, Urban Forestry Division prior to removal of any tree not scheduled for removal in the tree treatment schedule. Contractor shall contact City of Houston, Urban Forestry, at 832-395-8459 to apply for tree removal permit when needed.

PART 2 PRODUCTS

2.01 MATERIALS

A. Pruning Paint: Black latex, water based paint, free of all petroleum products.

B. Fertilizer: Fertilizer shall be a root stimulant that contains at a minimum the following ingredients: Ectomycorrhizal Fungi, VA Mycorrhizal (VAM) Fungi, Rhizosphere Bacillus spp., Kelp Meal Humic Acid, and Soluble Yucca.

C. Tree Protection Fencing: Orange, plastic mesh fenching, 4 feet in height with 6 feet high "t" bar posts installed 10 feet on centers as per drawings.

D. Plastic Root/Soil Protection: Clear polyethylene sheeting, minimum 6 mil, thickness.

PART 3 EXECUTION

3.01 PROTECTION OF EXISTING TREES AND SHRUBS

A. Site preparation work and/or construction work shall not begin in any area where tree preservation measures have not been completed and approved.

B. Protect exposed roots and root zone areas from contamination from stabilization materials and concrete using polyethylene.

C. Cover exposed roots within 4 hours to reduce damage caused by desiccation. Roots may be covered with soil, mulch, polyethylene, or wet burlap to help protect them from drying.

D. Designate limited areas as concrete washout areas. Locate concrete washout areas away from root zones.

E. Install root pruning trenching where designated in tree treatment schedule and shown on the tree protection drawings. Trees scheduled for root pruning are called out specifically in the treatment schedule. Trench shall be located 2 ft. from the edge of proposed waterline or sanitary sewer for trees called out for root pruning for water or fittings, or sanitary sewer in the treatment schedule, 2 ft. from edge of proposed storm sewer pipe for trees called out for root pruning for storm in the treatment schedule, 30" back of proposed curb for trees called out for root pruning for street, and at edge of sidewalk for trees called out for root pruning for sidewalk. Root pruning shall not be performed where there is not adequate space to be located sufficiently away from tree to prevent damage. All pruning must be evaluated by Contractor's Certified Arborist and reviewed and approved by City Forester before being performed. Trench locations shown on tree preservation plan are drawn to scale and should be located in field as drawn on plan. Exact locations shall be approved in the field by engineer and/or project urban forester prior to installation. Trenching depth shall be a minimum of 2 ft. deep and a maximum of 6 inches wide for water, fittings, sanitary sewer, storm, and street. Trenching depth shall be to the anticipated bottom of sidewalk and base material for sidewalk root pruning, roots lower than sidewalk shall not be pruned. All roots shall be cut by trencher, chainsaw, or handsaw to the specified depth. Roots shall be cut cleanly, and or not ripped, torn, or chopped. Trench shall be backfilled and compacted immediately after trenching. Trench shall be installed prior to any clearing and grubbing, excavation for underground, or any other site work.

F. Install tree protection fencing around each tree to be preserved as indicated in the tree treatment schedule and on the tree protection plan.

1. Each tree to be preserved shall be protected with a tree protection fence. The fencing shall be continuous between posts, shall be pulled taut prior to securing to posts, and shall be firmly attached to the posts with a minimum of 4 wire ties.

2. All tree protection fencing shall be installed prior to site work or construction activity. The fence shall be placed in a continuous alignment as shown on the tree protection plan. Fences shown on tree protection plan are drawn to scale and shall be installed as drawn, in the field. In general fences shall be placed 30" back of existing curb or edge of pavement where root pruning or zero curb cutback is not specified, and 6" back of root pruning trench where root pruning is specified and immediately back of curb where zero curb cutback is specified. Exact locations shall be approved by the project urban forester and/or engineer in the field. The Fences shall be placed to protect roots, trunks, and foliage. The contractor shall not remove or relocate tree protection fencing and shall not operate within the limits shown without direct approval of the project urban forester. In areas where the proposed waterline is located in the existing road side ditch and where tree protection fencing can not be installed across the ditch, the fencing shall be installed at the top of outside ditch bank and no bore pits, peep holes, service taps, or any excavation should occur in the area immediately in front of the tree protection fencing for trees called out with "bore" in the Tree Treatment Schedule. The "bore" limits shall be the same as the limits of the tree protection fencing.

3. Storage of equipment or materials will not be allowed inside a fence. Entryways and access into a protected area shall not be provided unless approved by the project urban forester.

4. Damage to tree fences occurring during the progress of the work shall be repaired immediately at no additional cost to owner. Workmen shall be clearly instructed to exercise caution in performance of work near trees being preserved.

5. Tree protection fencing shall be removed by contractor, at no additional costs, upon completion of all construction activity in each work zone area. Tree protection fencing materials used in the first two work zone areas shall be removed and utilized in subsequent work zone areas. Materials and labor shall be paid for each linear foot of fencing installed in first two work areas. All fencing installed in subsequent work zone areas shall be paid for labor only.

G. Boring/Auguring of water lines or sanitary sewer lines

1. Water line or sanitary sewer line shall be bored/augured/ horizontally drilled under

critical root zones areas of trees designated with auger or bore in the tree treatment schedule. The entire area protected with tree protection fencing shall be bored. No bore pits, come through holes, peep holes, push pits, or long or short side service taps shall be allowed in the areas protected by tree protection fencing. The tree protection plan takes into consideration the limits of augering equipment, there should be room for adequately spaced bore pits, peep holes, come through holes, and push pits. Any changes to the location of the tree protection fencing shall be authorized by the project Urban Forester and City Engineer.

H. Hand digging of Service taps and leads

1. Trees called out for Hand dig short side service tap are located in very close proximity to existing short side water meters. Excavating the service tap with machinery would significantly impact the tree and be in violation of the City of Houston's Street Tree Ordinance. These short side service taps shall be excavated with manual labor to expose any roots 1" in diameter and larger. The first 24" of excavation shall be completed manually to expose the roots. Any root 1" in diameter and larger shall remain undamaged, the roots shall not be cut , nor shall the bark and cambium layer be scraped or damaged. Once the roots are exposed, if there is adequate room to utilize a mini-excavator without damaging the roots, the mini-excavator can be utilized to complete the excavation down to the water line. 1" plywood shall be placed on grade to provide root protection in the area of access of the mini-excavator. If roots 1" diameter or larger are cut or damaged, responsible party will be subject to a citation under the Street Tree Ordinance, and may also be required to incur the cost of tree removal and replacement of damaged tree on an inch for inch basis, if required by City of Houston Urban Forestry Division.

2. Trees called out for Hand dig short side or long side service lead are located in very close proximity to existing water meters. Excavating the service lead with machinery would significantly impact the tree and be in violation of the City of Houston's Street Tree Ordinance. Short side leads shall be excavated with manual labor to expose any roots 1" in diameter and larger from the service tap of the meter. Come out hole and excavation required for long service leads shall be excavated with manual labor to expose roots 1" in diameter and larger, from the come out hole to the meter. In each case, all roots 1" in diameter and larger shall remain undamaged, the roots shall not be cut, nor shall the bark and cambium layer be scraped or damaged. If roots 1" diameter or larger are cut or damaged, responsible party will be subject to a citation under the cost of tree removal and replacement of damaged tree on an inch by inch basis, if required by City of Houston Urban Forestry Division.

3. Trees called out for Hand dig sanitary stub up are located in very close proximity to proposed service lead. Excavating the service lead with machinery would significantly impact the tree and be in violation of the City of Houston's Street Tree

Ordinance. Excavation for sanitary stub up shall be completed with manual labor to expose any roots 1" in diameter and larger. The lead shall be bored from face of curb to stub up hole when called out in the tree treatment schedule. Come out and stub up holes shall be excavated with manual labor to expose roots 1" in diameter and larger. In case, all roots 1" in diameter and larger shall remain undamaged, the roots shall not be cut, nor shall the bark and cambium layer be scraped or damaged. If roots 1" diameter or larger are cut or damaged, responsible party will be subject to a citation under the Street Tree Ordinance, and may be required to incur the cost of tree removal and replacement of damaged tree on an inch by inch basis, if required by City of Houston Urban Forestry Division.

4. Long side service taps shall not be located in an area specified to be bored in the tree treatment schedule. Should it be absolutely necessary to locate a long side service tap in an area specified to be bored, the excavation shall be completed as specified in paragraph 1 of this section-Hand digging short side service taps.
5. All water meters and sanitary service leads called out on P&P drawings and visible in the field have been addressed in the Tree Protection Plan. Should any additional meters or lead be found during construction, or in any new meters or leads installed beneath the canopy of any tree, fenced for tree protection, the excavation shall be completed as specified in paragraph 1 and/or 2 of this section and paid for at the unit cost for each included in contract.

I. Pruning of Trees

1. Trees shall be pruned in accordance with the American National Standard for tree pruning, ANSI A300 (Part 1) – 2001 Pruning Revision of ANSI A300-1995 Tree, Shrub and Other Woody Plant Maintenance – Standard Practices. Pruning shall be completed by professional arborists who has received training in proper pruning techniques.

2. Clearance prune designated trees for public streets, sidewalks, and construction areas. Provide minimum 14 feet and maximum of 18 feet of vertical clearance over proposed water trunk lines. Provide minimum of 14 feet and maximum of 16 feet of vertical clearance over proposed street construction, from 24" back of curb on one side to 24" back of curb on the other side. Provide 20' of vertical clearance over proposed storm sewer up to 38" in size, and 30' of vertical clearance for storm sewer larger than 38" in size. Pruning to be installed prior to any construction activity. Contractor shall notify property owner prior to trimming or pruning any trees with trunks located on private property. Exceptions will be made for trees determined to be arboriculturally significant by City of Houston Urban Forestry. Pruning of trees identified will be completed with approval and supervision of City of Houston Urban Forestry.

3. All cuts should be made sufficiently close to the parent limb or trunk without cutting into the branch collar or leaving a protruding stub, so that closure can readily start under normal conditions. All lateral cuts shall be made to a lateral that is least 1/3 the diameter of the parent limb. Clean cuts shall be made at all times.

4. Trees shall be pruned in a manner that will not destroy or alter the natural shape and character of the tree. Apply black latex paint to all fresh wounds on Oak (Quercus) species immediately after each cut is made.

5. Crown cleaning prune designated trees shall include selective removal of dead, diseased, and/or broken limbs.

J. Tree Removal

1. Trees scheduled for removal shall be sawed down and debris hauled from the site the same day. The stump shall be ground to 6" below grade and excess grindings shall be hauled from the site the same day, so that a pile of grindings is not left where the stump was ground. Enough grindings should be left so that an open hole does not remain.

2. Only those trees called out for removal in the Tree Treatment Schedule shall be removed, or otherwise damaged. Should it be determined that any additional trees must be removed, a permit must be applied for and approved from the City of Houston Urban Forestry Division prior to removal. Contractor shall contact Urban Forestry at 832-395-8459.

K. Root Stimulation

1. Deep root stimulate designated trees. Mix fertilizer with wetting agent per label instructions.

2. Stimulate entire root zone area within the dripline of the tree and continue 10 feet beyond the dripline, leaving out areas of anticipated root loss (construction areas).

3. Mixture shall be injected into the top 10 inches of soil under pressure of 150 to 200 psi as soil conditions warrant.

4. Mix in a tank with agitation capability per label instructions. Inject the mixture on a 2.5 ft. square grid at 4 lbs, actual nitrogen per 1,000 sq. ft.

L. Regularly water trees which have received root damage, to eliminate additional stress caused by lack of moisture. Water during periods without adequate rainfall. For example, should 1.0" of rain not be received within a week period, the trees should be thoroughly watered.

March through September, water once every two weeks. October through February, water every three weeks. Water thoroughly to saturate the entire root zone area.

M. Chemically treat tree trunks with evidence of borer activity with the appropriate approved insecticide mixed and applied per the manufacturer's product application recommendations. Trees shall be sprayed within 24 hours after observance of borer activity.

N. Grading and filling around trees.

1. Maintain existing grade within the dripline of trees, unless otherwise indicated.

2. Where existing grade around trees is above new finish grade, under supervision of project urban forester, carefully hand excavate within the dripline to make transition to new finish grade.

3. Where existing grade is below new finish grade, place clean bank sand in a single layer to make the transition to new grade. Do not compact; hand grade to required elevation. Specifically to areas where proposed curb is higher than existing and backfill will be required.

O. Demolition, Forming and Pouring Sidewalks (Sidewalk on Grade)

1. Demolition of existing sidewalks, located in or adjacent to the limits of tree protection fencing, shall be completed without disturbing, cutting, or otherwise damaging tree roots and soil located beneath them.

2. The new sidewalk shall be formed at or above the elevation of the existing sidewalk, without disturbing, cutting or otherwise damaging tree roots. Every effort has been made to address tree root and sidewalk elevation issues with information available in the field and on plan and profile sheets. The elevation of every tree root was not available, if tree roots are found to be in conflict with proposed sidewalk, project engineer and urban forester shall be consulted as to how to install sidewalks with minimal impacts to adjacent trees.

3. Checkerplate shall be installed in areas called out only if tree root elevations prohibit construction of ADA compliant sloped concrete sidewalks. Checkerplate shall be installed per detail.

P. Zero curb cutback

1. Disturbance of tree roots or soil behind the existing and/or proposed curb within root zones of trees designated for zero curb cutback shall be prohibited. If the curb can not be removed without disturbing soil or damaging roots back of curb when using

equipment for demolition, the curb shall be broken using a hand held jackhammer and removed by hand.

2. The exposed roots and soil shall be covered immediately after demolition with 6 mil polyethylene in order to avoid desiccation, and contamination by the lime used for road bed stabilization. The polyethylene shall be placed so that it covers the vertical face of soil back of curb and laid back onto the grade 12 inches back of curb. The polyethylene should remain in place, across the entire area specified for zero curb cutback, from the time the existing curb is demolished until the time when the new curb is formed and backfilled. The polyethylene can be pulled up from the vertical face while the road bed is being graded or mixed, to avoid catching the plastic with machinery, but shall be replaced immediately after equipment has completed. The vertical face shall not be exposed for more than 8 hours in any 24 hour period.

3. There shall be no stabilization back of curb in the zero curb cutback areas, or forming with steel forms. The existing grade and roots back of existing curb shall not be disturbed. This may require forming of the new street with wooden forms with stakes inside forms, which may require leaving the forms in place after the street is poured. Should wooden forms be utilized, the wood shall be at minimum a 2x6. The new curb may require hand finishing, as a slip curb machine may not have adequate clearance without disturbing the roots that are to be protected with the zero curb cutback.

4. Roots extending into the street, or on top of the existing curb, in areas to paved shall be cut and removed by hand prior to disturbance or removal with equipment. Roots shall be pruned flush with the proposed back of curb. Roots one inch in diameter and larger shall be cut in a manner to provide a smooth, clean cut surface. Cuts shall be made with the appropriate pruning shears or pruning saws. Roots shall not be chopped or broken.

5. In areas where proposed curb will be may be lower than existing top of curb and tree roots 2" diameter or larger are present, the soil and roots shall not be graded or laid back. The existing elevation shall be maintained and the curb formed to meet elevation or a short elevation difference roots and top of curb maintained.

Q. Demolition, Forming and Pouring of Drive Way Approaches

1. Demolition of existing driveway approaches located beneath the dripline of any tree shall be completed without disturbing, cutting, or otherwise damaging tree roots and soil located beneath them.

2. The new approach shall be formed at or above the elevation of the existing approach where tree roots 2" diameter or larger are present, without disturbing, cutting or

otherwise damaging tree roots. Maximum drive slopes may be needed at bottom of apron to allow forming of drive over tree roots at top of drive. As with sidewalks, the elevation of every tree roots was not available in design. If tree roots are found to be in conflict with proposed approach, project engineer and urban forester shall be consulted as to how to install drive way with minimal impacts to adjacent trees.

R. Replacement Trees for Tree Removals under Ordinance

1. Location, species, and size of replacement trees are indicated on the drawings. Contractor shall layout individual trees at locations shown on drawings. Contractor shall layout individual trees at locations shown on drawings and be responsible for utility locate requirements. In case of conflicts, notify City Engineer and City Urban Forestry before proceeding with work. Trees shall be laid out and locations approved by City Engineer prior to planting.

2. Trees shall meet and be planted according to City of Houston Standard Specification 02915.

S. Arborist and Urban Forester Qualifications

1. Arborist – Employ qualified arborist acceptable to City's Parks and Recreation Department to complete all tree treatments. Arborist shall be normally engaged in the field and have a minimum of 5 years experience. Qualifications of the selected arborist shall be submitted for review and approval by the project engineer and City of Houston.

2. Urban Forester – An Urban forester shall be hired to monitor and assist with field layout (exact locations of fencing, root pruning, and zero curb cutback) of the tree preservation program during demolition and construction to ensure tree protection procedures and techniques are practiced as specified to address concerns and conditions which occur in the field. At a minimum, the individual responsible for monitoring and field layout of the tree protection shall have a minimum of 5 years of experience as a consultant, and shall not be affiliated with a tree care contractor in the Houston area. Qualifications of the selected urban forester shall be submitted for review and approval by the project engineer and City of Houston Urban Forestry Department.

END OF SECTION

Section 01570

STORM WATER POLLUTION PREVENTION CONTROL

PART 1 GENERAL

1.01 SECTION INCLUDES

A. Implementation of Storm Water Pollution Prevention Plans (SWP3) described in Section 01410 – TPDES Requirement.

B. Installation, maintenance and removal, of storm water pollution prevention structures: diversion dikes, interceptor dikes, diversion swales, interceptor swales, down spout extenders, pipe slope drains, paved flumes and level spreaders. Structures are used during construction and prior to final development of the site.

C. Filter Fabric Barriers:

1. Type 1: Temporary filter fabric barrier for erosion and sediment control in non-channelized flow areas.
2. Type 2: Temporary reinforced filter fabric barrier for erosion and sediment control in channelized flow areas.

D. Hay Bale Fence.

E. Drop Inlet Basket

F. Inlet Sediment Traps

G. Brush Berm

H. Sand Bag Barrier

I. Bagged Gravel Barrier

J. Sediment Basin

K. Inlet Protection Barrier

1.02 MEASUREMENT AND PAYMENT

A. UNIT PRICES

1. Payment for filter fabric barrier is on a linear foot basis measured between limits of beginning and ending of stakes.

2. Payment for reinforced filter fabric barrier is on a linear foot basis measured between limits of beginning and ending of stakes.

3. Payment for drop inlet baskets is on a unit price basis for each drop inlet basket.

4. Payment for storm inlet sediment traps is on a unit price basis for each storm inlet sediment trap.

5. Payment for storm water pollution prevention structures is on a lump sum basis for the project. Earthen structures with outlet and piping include diversion dikes, interceptor dikes, diversion swales, interceptor swales, and excavated earth-outlet sediment trap, embankment earth-outlet sediment trap, down spout extenders, pipe slope drains, paved flumes, stone outlet sediment trap, and level spreaders.

6. Payment for hay bale barrier, if included in Document 00410 - Bid Form, is on a linear foot of accepted bale barriers, if not include in cost of storm water pollution prevention structures.

7. Payment for brush berm, if included in Document 00410 - Bid Form, is on a linear foot of accepted brush berm, if not include in cost of storm water pollution prevention structures.

8. Payment for sandbag barrier, if included in Document 00410 - Bid Form, is on a linear foot basis measured between limits of beginning and ending of sandbags, if not include in cost of storm water pollution prevention structures.

9. Payment for bagged gravel barrier, if included in Document 00410 - Bid Form, is on a linear foot basis measured between limits of beginning and ending of bagged gravel barrier, if not include in cost of storm water pollution prevention controls.

10. Payment for inlet protection barriers, if included in Document 00410 - Bid Form, is on a linear foot basis measured along outside face of inlet protection barrier, if not include in cost of storm water pollution prevention structures.

11. Refer to Section 01270 - Measurement and Payment for unit price procedures.

B. Stipulated Price (Lump Sum) Contract. If Contract is Stipulated Price Contract, payment for Work in this Section is included in total Stipulated

1.03 REFERENCE STANDARDS

A. ASTM

1. A 36 – Standard Specification for Carbon Structural Steel.

2. D698 – Standard Test Methods for Laboratory Compaction Characteristics of Soil Using Standard Effort (12,400 ft-lbf/ft3 (600kN-m/m3)).

3. D3786 – Standard Test Method for Hydraulic Bursting Strength for knitted Goods and Nonwoven Fabrics.

4. D 4355 - Standard Test Method for Deterioration of Geotextiles from Exposure to Ultraviolet Light and Water (Xenon-Arc Type Apparatus).

5. D 4491 - Standard Test Methods for Water Permeability of Geotextiles by Permittivity.

6. D 4632 - Standard Test Method for Grab Breaking Load and Elongation of Geotextiles.

7. D 4833 - Standard Test Method for Index Puncture Resistance of Geotextiles, Geomembranes, and Related Products.

8. D 6382 - Standard Practice for Dynamic Mechanical Analysis and Thermogravimetry of Roofing and Waterproofing Membrane Material.

B. Storm Water Management Handbook for Construction Activities prepared by City of Houston, Harris County and Harris County Flood Control District.

1.04 SYSTEM DESCRIPTIONS

A. Filter Fabric Barrier Type 1 and Type 2: Install to allow surface or channel runoff percolation through fabric in sheet-flow manner and to retain and accumulate sediment. Maintain Filter Fabric Barriers to remain in proper position and configuration at all times.

B. Hay Bale Fence: Install to allow surface runoff percolation through hay in sheet-flow manner and to retain and accumulate sediment. Maintain Hay Bale Fence to remain in proper position and configuration at all times.

C. Interceptor Dikes and Swales: Construct to direct surface or channel runoff around the project area or runoff from project area into sediment traps.

D. Drop Inlet Baskets: Install to allow runoff percolation through the basket and to retain and accumulate sediment. Clean accumulation of sediment to prevent clogging and backups.

E. Sediment Traps: Construct to pool surface runoff from construction area to allow sediment to settle onto the bottom of trap.

F. Sand Bags: Are used during construction activities in unstabilized minor swales, ditches, or streambeds when the contributing drainage area is no greater than 2 acres. It is also sediment barrier for stage one Inlet.

G. Bagged Gravel Barrier: Are used during construction activities in unstabilized minor swales, ditches, or streambeds when the contributing drainage area is no greater than 2 acres. It is also sediment barrier for stage two Inlet.

H. Drop Inlet Insert Basket: Is a temporary barrier placed within a storm drain inlet (Lower Portion of Stage I and Upper Portion of Stage II Inlets) consisting of a filter fabric supported by a metal frame work to prevent sediment and other pollutants from entering convey system.

I. Brush Berm: Brush Berm is constructed at the perimeter of a distribute site within the developing area.

1.05 SUBMITTALS

A. Conform to requirements of Section 01330 - Submittal Procedures.

B. Submit manufacturer's literature for product specifications and installation instructions.

C. Submit manufacturer's catalog sheets and other product data on geotextile or filter fabrics, outlet pipe, perforated riser and connectors.

D. Submit proposed methods, equipment, materials, and sequence of operations for storm-water pollution prevention structures.

E. Submit shop drawings for Drop Inlet Baskets.

PART 2 P R O D U C T S

2.01 CONCRETE

A. Concrete: Class B in accordance with Section 03315 – Concrete for Utility Construction or as shown on the Drawings.

2.02 AGREGATE MATERIALS

A. Use poorly graded cobbles with diameter greater than 3 inches and less than 5 inches.

B. Provide gravel lining in accordance with Section 2320 – Utility Backfill Materials or as shown on the drawings.

C. Provide clean cobbles and gravel consisting of crushed concrete or stone. Use clean, hard crushed concrete or stone free from adherent coatings, salt, alkali, dirt, clay, loam, shale, soft or flaky materials, or organic matter.

D. Sediment Pump Pit Aggregate: Use nominal 2-inch diameter river gravel.

2.03 PIPE

A. Polyethylene culvert pipe or PVC sewer pipe in accordance with Section 02505- High Density Polyethylene (HDPE) Solid and Profile Wall Pipe and Section 02506 Polyvinyl Chloride Pipe or as shown on the Drawings.

B. Inlet Pipes: Galvanized steel pipe in accordance with Section 02642 Corrugated Metal Pipe or as shown on the Drawings.

C. Standpipe for Sediment Pump Pits: Galvanized round culvert pipe or round PVC pipe, minimum of 12-inch and a maximum of 24-inch diameter, perforate at 6 to 12 inch centers around circumference.

2.04 GEOTEXTILE FILTER FABRIC

A. Woven or nonwoven geotextile filter fabric made of either polypropylene, polyethylene, ethylene, or polyamide material, in continuous rolls of longest practical length.

B. Grab Strength: 100 psi in any principal direction (ASTM D-4632), Mullen burst strength >200 psi (ASTM D-3786), and equivalent opening size between 50 and 140.

C. Furnish ultraviolet inhibitors and stabilizers for minimum 6 months of expected usable construction life at temperature range of 0 degrees F to 120 degrees F.

D. Mirafi, Inc., Synthetic Industries, or equivalent

2.05 BARRIER

A. Wire Barrier: Woven galvanized steel wire, 14 gauge by 6-inch square mesh spacing, minimum 24 inch roll or sheet width of longest practical length.

B. Barrier Stakes: Nominal 2 by 2 inch moisture-resistant treated wood or steel posts (min. of 1.25 lbs. per linear foot and Brinell Hardness greater than 140) with safety caps on top; length as required for minimum 8 inch bury and full

height of filter fabric.

2.06 SANDBAGS

A. Provide woven material made of polypropylene, polyethylene, or polyamide material.

1. Minimum unit weight of four ounces per square yard.

2. Minimum grab strength of 100 lbs in any principal direction (ASTM D4632)

3. Mullen burst strength exceeding 300 lbs (ASTM D4833).

4. Ultraviolet stability exceeding 70 percent. After 500 hours of exposure (ASTM 4355).

5. Size: Length:18 to 24 inches. Width: 12 to 18 inches. Thickness: 6 to 8 inches. Weight: Approximately 40 to 50 pounds not to exceed 75 pounds.

2.07 Bagged gravel Barrier

1. Minimum unit weight of four ounces per square yard.

2. Minimum grab strength of 100 lbs in any principal direction (ASTM D4632)

3. Mullen burst strength exceeding 300 lbs (ASTM D4833).

4. Ultraviolet stability exceeding 70 percent. After 500 hours of exposure (ASTM 4355).

5. Size: Length:18 to 24 inches. Width: 12 to 18 inches. Thickness: 6 to 8 inches. Weight: Approximately 40 to 50 pounds not to exceed 75 pounds.

2.08 DROP INLET BASKET

A. Provide steel frame members in accordance with ASTM A36.

B. Construct top frame of basket with two short sides of 2 inch by 2 inch and single long side of 1 inch by 1 inch, 1/8 inch angle iron. Construct basket hangers of 2 inch by 1/4 inch iron bars. Construct bottom frame of 1 inch by 1/4 inch iron bar or 1/4 inch plate with center 3 inches removed. Use minimum 1/4 inch diameter iron rods or equivalent for sides of inlet basket.

Weld minimum of 14 rods in place between top frame/basket hanger and bottom frame. Exact dimensions for top frame and insert basket will be determined based on dimensions of type of inlet being protected.

2.09 HAY BALE

A. Hay: Standard-baled agricultural hay bound by wire, nylon, or polypropylene rope. Do not use jute or cotton binding.

B. Hay Bale Stakes (applicable where bales are on soil): No. 3 (3/8 diameter) reinforcing bars, deformed or smooth at Contractor's option, length as required for minimum 18 inch bury and full height bales.

PART 3 E X E C U T I O N

3.01 PREPARATION, INSTALLATION AND MAINTEINANCE

A. Provide erosion and sediment control structures at locations shown on the Drawings.

B. Do not clear, grub or rough cut until erosion and sediment control systems are in place unless approved by Project Manger to allow installation of erosion and sediment control systems, soil testing and surveying.

C. Maintain existing erosion and sediment control systems located within project site until acceptance of Project or until directed by Project Manger to remove and discard existing system.

D. Regularly inspect and repair or replace damaged components of erosion and sediment control structures. Unless otherwise directed, maintain erosion and sediment control structure until project area stabilization is accepted. . Redress and replace granular fill at outlets as needed to replenish depleted granular fill. Remove erosion and sediment control structures promptly when directed by Project Manger. Dispose of materials in accordance with Section 01576 - Waste Material Disposal.

E. Remove and dispose sediment deposits at the designated spoil site for the Project. If a project spoil site is not designated on Drawings, dispose of sediment off site at approved location in accordance with Section 01576 - Waste Material Disposal.

F. Unless otherwise shown on the Drawings, compact embankments, excavations, and trenches in accordance with Section 02315 Roadway

Excavation or Section 2317 Excavation and Backfill for Utilities.

G. Prohibit equipment and vehicles from maneuvering on areas outside of dedicated right of way and easements for construction. Immediately repair damage caused by construction traffic to erosion and sediment control structures.

H. Protect existing trees and plants in accordance with Section 1562 – Tree and Plant Protection.

3.02 SEDIMENT TRAPS

A. Install sediment traps so that surface runoff shall percolate through system in sheet flow fashion and allow retention and accumulation of sediment.

B. Inspect sediment traps after each rainfall, daily during periods of prolonged rainfall, and at a minimum once each week. Repair or replace damaged sections immediately.

C. Use fill material for embankment in accordance with Section 02320 – Utility Backfill Materials.

D. Excavation length and height shall be as specified on Drawings. Use side slopes of 2:1 or flatter.

E. Stone outlet sediment traps:

1. Maintain minimum of 6 inches between top of core material and top of stone outlet, minimum of 4 inches between bottom of core material and existing ground and minimum of 1 foot between top of stone outlet and top of embankment.

2. Embed cobbles minimum of 4 inches into existing ground for stone outlet. Core shall be minimum of 1 foot in height and in width and wrapped in triple layer of geotextile filter fabric.

F. Sediment Basin with Pipe Outlet Construction Methods: Install outlet pipe and riser as shown on the Drawings.

G. Remove sediment deposits when design basin volume is reduced by one-third or sediment level is one foot below principal spillway crest, whichever is less.

3.03 FILTER FABRIC BARRIER CONSTRUCTION METHODS

A. Fence Type 1: Filter Fabric: Barrier

1. Install stakes 3 feet on center maximum and firmly embed minimum 8 inches in soil. If filter fabric is factory preassembled with support netting, then maximum support spacing is 8 feet. Install wood stakes at a slight angle toward the source of anticipated runoff.

2. Trench in the toe of the fence lines so the downward face of the trenches is flat and perpendicular to direction of flow. V-trench configuration as shown on Drawings may also be used.

3. Lay fabric along edges of trenches in longest practical continuous runs to minimize joints. Make joints only at a support post. Splice with minimum 6-inch overlap and seal securely.

4. Staple filter fabric to stakes at maximum 3 inches on center. Extend fabric minimum 18 inches and maximum 36 inches above natural ground.

5. Backfill and compact trench.

B. Barrier Type 2: Reinforced Filter Fabric Barrier

1. Layout barrier same as for Type 1.

2. Install stakes at 6 feet on center maximum and at each joint in wire fence, firmly embedded 1-foot minimum, and inclined it as for Type 1.

3. Tie wire fence to stakes with wire at 6 inches on center maximum. Overlap joints minimum one bay of mesh.

4. Install trench same as for Type 1.

5. Fasten filter fabric wire fence with tie wires at 3 inches on center maximum.

6. Layout fabric same as for Type 1. Fasten to wire fence with wire ties at 3 inches on center maximum and, if applicable, to stakes above top of wire fence it as for Type 1.

7. Backfill and compact trench.

8. Attach filter fabric to wooden fence stakes spaced a maximum of 6 feet apart or steel fence stakes spaced a maximum of 8 feet apart and embedded a minimum of 12 inches. Install stakes at a slight angle toward source of anticipated runoff.

9. Trench in toe of filter fabric barrier with spade or mechanical trencher so that downward face of trench is flat and perpendicular to direction of flow. A V-trench configuration may also be used. Lay filter fabric along edges of trench. Backfill and compact trench upon completion of Construction.

10. Filter fabric fence shall have a minimum height of 18 inches and a maximum height of 36 inches above natural ground.

11. Cut length of fence to minimize use of joints. When joints are necessary, splice fabric together only at support post with minimum 6 inch overlap and seal securely.

12. When used in swales, ditches or diversions, elevation of barrier at top of filter fabric at flow line location in channel shall be lower than bottom elevation of filter fabric at ends of barrier or top of bank, whichever is less, in order to keep storm water discharge in channel from overtopping bank.

C. Triangular Filter Fabric Barrier Construction Methods

1. Attach filter fabric to wire fencing, 18 inches on each side. Provide a fabric cover and skirt with continuous wrapping of fabric. Skirt should form continuous extension of fabric on upstream side of fence.

2. Secure triangular fabric filter barrier in place using one of the following methods:
   a. Toe-in skirt 6 inches with mechanically compacted material;
   b. Weight down skirt with continuous layer of 3-inch to 5-inch graded rock; or
   c. Trench-in entire structure 4 inches.

3. Anchor triangular fabric filter barrier structure and skirt securely in place using 6-inch wire staples on 2-foot centers on both edges and on skirt, or staked using 18-inch by 3/8-inch diameter re-bar with tee ends.

4. Lap fabric filter material by 6 inches to cover segment joints. Fasten joints with galvanized shoat rings.

3.04 DIKE AND SWALE

A. Unless otherwise indicated, maintain minimum dike height of 18 inches, measured from cleared ground at up slope toe to top of dike. Maintain side slopes of 2:1 or flatter.

B. Dike and Swale Stabilization: When shown on the Drawings, place gravel lining 3 inches thick and compacted into the soil or 6 inches thick if truck crossing is expected. Extend gravel lining across bottom and up both sides of swale minimum height of 8 inches vertically, above bottom. Gravel lining on dike side shall extend up the up slope side of dike a minimum height of 8 inches, measured vertically from interface of existing or graded ground and up slope toe of dike, as shown on Drawings.

C. Divert flow from dikes and swales to sediment basins, stabilized outlets, or sediment trapping devices of types and at locations shown on Drawings. Grade dikes and swales as shown on Drawings, or, if not specified, provide positive drainage with maximum grade of 1 percent to outlet or basin.

D. Clear in accordance with Section 2233 – Clearing and Grubbing Compact embankments in accordance with Section 2315 – Roadway Excavation.

E. Carry out excavation for swale construction so that erosion and water pollution is minimal. Minimum depth shall be 1 foot and bottom width shall be 4 feet, with level swale bottom. Excavation slopes shall be 2:1 or flatter. Clear, grub and strip excavation area of vegetation and root material.

3.05 DOWN SPOUT EXTENDER

A. Down spout extender shall have slope of approximately 1 percent. Use pipe diameter of 4 inches or as shown on the Drawings. Place pipe in accordance with Section 2317 - Bedding and Backfill for Utilities.

3.06 PIPE SLOPE DRAIN

A. Compact soil around and under drain entrance section to top of embankment in lifts appropriately sized for method of compaction utilized.

B. Inlet pipe shall have slope of 1 percent or greater. Use pipe diameter as shown on the Drawings.

C. Top of embankment over inlet pipe and embankments directing water to pipe shall be at least 1 foot higher at all points than top of inlet pipe.

D. Pipe shall be secured with hold-down grommets spaced 10 feet on centers.

E. Place riprap apron with a depth equal to pipe diameter with 2:1 side slopes.

3.07 PAVED FLUME

A. Compact soil around and under the entrance section to top of the embankment in lifts appropriately sized for method of compaction utilized.

B. Construct subgrade to required elevations. Remove and replace soft sections and unsuitable material. Compact subgrade thoroughly and shape to a smooth, uniform surface.

C. Construct permanent paved flumes in accordance with Drawings.

D. Remove sediment from riprap apron when sediment has accumulated to depth of one foot.

3.08 LEVEL SPREADER

A. Construct level spreader on undisturbed soil and not on fill. Ensure that spreader lip is level for uniform spreading of storm runoff.

B. Maintain at required depth, grade, and cross section as specified on Drawings. Remove sediment deposits as well as projections or other irregularities which will impede normal flow.

3.09 INLET PROTECTION BARRIER

A. Place sandbags for Stage I, Bagged gravel for Stage II and filter fabric barriers at locations shown on the SWP3. Maintain to allow minimal inlet in flow restrictions / blockage during storm event.

3.10 DROP INLET BASKET CONSTRUCTION METHODS

A. Fit inlet insert basket into inlet without gaps around insert at locations shown on the SWP3.

B. Support for inlet insert basket shall consist of fabricated metal as shown on Drawings.

C. Push down and form filter fabric to shape of basket. Use sheet of fabric large enough to be supported by basket frame when holding sediment and extend at least 6 inches past frame. Place inlet grates over basket/frame to serve as fabric anchor.

D. Remove sediment deposit after each storm event and whenever accumulation exceeds 1-inch depth during weekly inspections.

3.11 HAY BALE FENCE CONSTRUCTION METHODS

A. Place bales in row with ends tightly abutting adjacent bales. Place bales with bindings parallel to ground surface.

B. Embed bale in soil a minimum of 4 inches.

C. Securely anchor bales in place with Hay Bale Stakes driven through bales a minimum of 18-inches into ground. Angle first stake in each bale toward previously laid bale to force bales together.

D. Fill gaps between bales with straw to prevent water from channeling between bales. Wedge carefully in order not to separate bales.

E. Replace with new hay bale fence every two months or as required by Project Manager.

3.12 BRUSH BERM CONSTRUCTION METHODS

A. Construct brush berm along contour lines by hand placing method. Do not use machine placement of brush berm.

B. Use woody brush and branches having diameter less than 2-inches with 6-inches overlap. Avoid incorporation of annual weeds and soil into brush berm.

C. Use minimum height of 18-inches measured from top of existing ground at upslope toe to top of berm. Top width shall be 24 inches minimum and side slopes shall be 2:1 or flatter.

D. Embed brush berm into soil a minimum of 4-inches and anchor using wire, nylon or polypropylene rope across berm with a minimum tension of 50 pounds. Tie rope securely to 18-inch x 3/8-inch diameter rebar stakes driven into ground on 4-foot centers on both sides of berm.

3.13 STREET AND SIDEWALK CLEANING

A. Keep areas clean of construction debris and mud carried by construction vehicles and equipment. If necessary, install stabilized construction exits at construction, staging, storage, and disposal areas, following Section 01575-Stabilized Construction Exit.

B. In lieu of or in addition to stabilized construction exits, shovel or sweep pavements as required to keep areas clean. Do not waterhose or sweep debris and mud off street into adjacent areas, except, hose sidewalks during off-peak hours, after sweeping.

3.14 WASTE COLLECTION AREAS

A. Prevent water runoff from passing through waste collection areas, and prevent water runoff from waste collection areas migrating outside collection areas.

3.15 EQUIPMENT MAINTENANCE AND REPAIR

A. Confine maintenance and repair of construction machinery and equipment to areas specifically designated for that purpose, so fuels, lubricants, solvents, and other potential pollutants are not washed directly into receiving streams or storm water conveyance systems. Provide these areas with adequate waste disposal receptacles for liquid and solid waste. Clean and inspect maintenance areas daily.

B. Where designated equipment maintenance areas are not feasible, take precautions during each individual repair or maintenance operation to prevent potential pollutants from washing into streams or conveyance systems. Provide temporary waste disposal receptacles.

3.16 VEHICLE/ EQUIPMENT WASHING AREAS

A. Install wash area (stabilized with coarse aggregate) adjacent to stabilized construction access, as required to prevent mud and dirt run-off. Release wash water into drainage swales or inlets protected by erosion and sediment controls. Build wash areas following Section 01575- Stabilized Construction access. Install gravel or rock base beneath wash areas.

B. Wash vehicles only at designated wash areas. Do not wash vehicles such as concrete delivery trucks or dump trucks and other construction equipment at locations where runoff flows directly into waterways or storm water conveyance systems.

C. Locate wash areas to spread out and evaporate or infiltrate wash water directly into ground, or collect runoff in temporary holding or seepage basins.

3.17 WATER RUNOFF AND EROSION CONTROL

A. Control surface water, runoff, subsurface water, and water from excavations and structures to prevent damage to the Work, the site, or adjoining properties. Follow environment requirements.

B. Control fill, grading and ditching to direct water away from excavations, pits, tunnels, and other construction areas, and to direct drainage to proper runoff courses to prevent erosion, sedimentation or damage.

C. Provide, operate, and maintain equipment and facilities of adequate size to control surface water.

D. Retain existing drainage patterns external to the site by constructing temporary earth berms, sedimentation basins, retaining areas, and temporary ground cover as required to control conditions.

E. Plan and execute construction and earth work to control surface drainage from cuts and fills, and from borrow and waste disposal areas, to prevent erosion and sedimentation.

1. Hold area of bare soil exposed at one time to a minimum.

2. Provide temporary controls such as berms, dikes, and drains.

F. Construct fill and waste areas by selective placement to eliminate surface silts or clays which will erode.

G. Inspect earthwork periodically to detect start of erosion. Immediately apply corrective measures as required to control erosion.

H. Dispose of sediments offsite, not in or adjacent to waterways or floodplains, nor allow sediments to flush into streams or drainage ways. Assume responsibility for offsite disposal location.

I. Unless otherwise indicated, compact embankments, excavations, and trenches by mechanically blading, tamping, and rolling soil in maximum of 8-inch layers. Provide compaction density at minimum 90 percent Standard Proctor ASTM D-698-78 density. Make at least one test per 500 cubic yards of embankment.

J. Prohibit equipment and vehicles from maneuver on areas outside of dedicated rights-of-way and easements for construction. Immediately repair damage to erosion and sedimentation control systems caused by construction traffic.

K. Do not damage existing trees intended to remain.

3.18 REMOVAL OF CONTROLS

A. Remove erosion and sediment controls when the site is finally stabilized or as directed by Project Manager.

B. Dispose of sediments and waste products following Section 01505-Temporary Facilities.

END OF SECTION

Section 01575

STABILIZED CONSTRUCTION ACCESS

PART 1 GENERAL

1.01 SECTION INCLUDES

A. Installation and removal of erosion and sediment control for stabilized construction access used during construction and prior to final development of site, as shown in City of Houston Standard Construction details, DWG No. 01571-01.

1.02 MEASUREMENT AND PAYMENT

A. Unit Price Contracts. If Contract is Unit Price Contract, payment for work in this Section will be based on the following:

1. Stabilized construction roads, parking areas, access and wash areas: per square yard of aggregate/recycled concrete without reinforcing placed in 8-inch layers. No separate payment will be made for street cleaning necessary to meet TPDES requirements. Include cost of work for street cleaning under related Specification section.

B. Stipulated Price (Lump Sum) Contracts. If the Contract is a Stipulated Price Contract, include payment for work under this Section in the total Stipulated Price.

1.03 SUBMITTALS

A. Conform to requirements of Section 01330 - Submittal Procedures.

B. Submit manufacturer's catalog sheets and other Product Data on geotextile fabric.

C. Submit sieve analysis of aggregates conforming to requirements of this Specification.

1.04 REFERENCES

A. ASTM D 4632 - Standard Test Method for Grab Breaking Load and Elongation of Geotextiles.

B. Storm Water Quality Management Handbook For Construction Activities prepared by the City of Houston, Harris County and Harris County Flood Control District.

PART 2 PRODUCTS

2.01 GEOTEXTILE FABRIC

A. Provide woven or non-woven geotextile fabric made of polypropylene, polyethylene, ethylene, or polyamide material.

B. Geotextile fabric: Minimum grab strength of 200 lbs in any principal direction (ASTM D-4632) and equivalent opening size between 50 and 140.

C. Geotextile and threads: Resistant to chemical attack, mildew, and rot and contain ultraviolet ray inhibitors and stabilizers to provide minimum of six months of expected usable life at temperature range of 0 to 120 degrees F.

D. Representative Manufacturers: Mirafi, Inc. or equal.

2.02 COARSE AGGREGATES

A. Coarse aggregate: Crushed stone, gravel, crushed blast furnace slag, or combination of these materials. Aggregate shall be composed of clean, hard, durable materials free from adherent coatings of, salt, alkali, dirt, clay, loam, shale, soft or flaky materials, or organic and injurious matter.

B. Coarse aggregates to consist of open graded rock 2" to 8" in size.

PART 3 EXECUTION

3.01 PREPARATION AND INSTALLATION

A. Provide stabilized construction roads and access at construction, staging, parking, storage,
and disposal areas to keep street clean of mud carried by construction vehicles and equipment. Construct erosion and sediment controls in accordance with Drawings and Specification requirements.

B. Do not clear grub or rough cut until erosion and sediment control systems are in place, unless approved by Project Manager to allow soil testing and surveying.

C. Maintain existing construction site erosion and sediment control systems until acceptance of the Work or until removal of existing systems is approved by Project Manager.

D. Regularly inspect, repair or replace components of stabilized construction access. Unless otherwise directed, maintain stabilized construction roads and

access until the City accepts the Work. Remove stabilized construction roads and access promptly when directed by Project Manager. Discard removed materials off-site.

E. Remove and dispose of sediment deposits at designated spoil site for Project. If a spoil site is not designated on Drawings, dispose of sediment off-site at a location not in or adjacent to stream or flood plain. Assume responsibility for off-site disposal.

F. Spread compacted and stabilized sediment evenly throughout site. Do not allow sediment to flush into streams or drainage ways. Dispose of contaminated sediment in accordance with existing federal, state, and local rules and regulations.

G. Prohibit equipment and vehicles from maneuvering on areas outside of dedicated rights-of-way and easements for construction. Immediately repair damage to erosion and sediment control systems caused by construction traffic.

H. Conduct construction operations in conformance with erosion control requirements of Specification 01570 – Storm Water Pollution Control.

3.02 CONSTRUCTION MAINTENANCE

A. Provide stabilized access roads, subdivision roads, parking areas, and other on-site vehicle transportation routes where shown on Drawings.

B. Provide stabilized construction access and vehicle washing areas, when approved by Project Manager, of sizes and at locations shown on Drawings or as specified in this Section.

C. Clean tires to remove sediment on vehicles leaving construction areas prior to entering public right-of-ways. Construct wash areas needed to remove sediment. Release wash water into drainage swales or inlets protected by erosion and sediment control measures.

D. Details for stabilized construction access are shown on Drawings. Construct other stabilized areas to same requirements. Maintain minimum roadway widths of 14 feet for one-way traffic and 20 feet for two-way traffic and of sufficient width to allow ingress and egress. Place geotextile fabric as a permeable separator to prevent mixing of coarse aggregate with underlaying soil. Limit exposure of geotextile fabric to elements between laydown and cover to a maximum 14 days to minimize potential damage.

E. Grade roads and parking areas to provide sufficient drainage away from stabilized areas. Use sandbags, gravel, boards, or similar materials to prevent sediment from entering public right-of-ways, waterways or

storm water conveyance systems.

F. Inspect and maintain stabilized areas daily. Provide periodic top dressing with additional coarse aggregates to maintain required depth. Repair and clean out damaged control systems used to trap sediment. Immediately remove spilled, dropped, washed, or tracked sediment from public right-of-ways.

G. Maintain lengths of stabilized areas as shown on Drawings or a minimum of 50 feet. Maintain a minimum thickness of 8 inches. Maintain minimum widths at all points of ingress or egress.

H. Stabilize other areas with the same thickness, and width of coarse aggregate required for stabilized construction access, except where shown otherwise on Drawings.

I. Stabilized areas may be widened or lengthened to accommodate truck washing areas when authorized by Project Manager.

J. Clean street daily before end of workday. When excess sediments have tracked onto streets, Project Manager may direct Contractor to clean street as often as necessary. Remove and legally dispose of sediments.

K. Use other erosion and sediment control measures to prevent sediment runoff during rain periods and non-working hours and when storm discharges are expected.

END OF SECTION

Section 01576

WASTE MATERIAL DISPOSAL

PART 1 GENERAL

1.01 SECTION INCLUDES

A. Disposal of waste material and salvageable material.

1.02 SUBMITTALS

A. Conform to requirements of Section 01330 - Submittal Procedures.

B. Submit copy of approved "Development Permit", as defined in Chapter 19 of Flood Plain Ordinance (City Ordinance Number 81-914 and Number 85-1705), prior to disposal of excess material in areas designated as being in "100-year Flood Hazard Area" within the City. Contact the City of Houston Flood Plain Manager, 3300 Main Street, at (713) 525-7605 for flood plain information.

C. Obtain and submit disposal permits for proposed disposal sites, if required by local ordinances.

D. Submit copy of written permission from property owner, with description of property, prior to disposal of excess material adjacent to Project. Submit written and signed release from property owner upon completion of disposal work.

E. Describe waste materials expected to be stored on-site and a description of controls to reduce Pollutants from these materials, including storage practices to minimize exposure of materials to storm water; and spill prevention and response measures in the Project's Storm Water Pollution Prevention Plan (SWPPP). Refer to Section 01410 – TPDES Requirements.

PART 2 PRODUCTS - Not Used

PART 3 EXECUTION

3.01 SALVAGEABLE MATERIAL

A. Excavated Material: When indicated on Drawings, load, haul, and deposit excavated material at location or locations shown on Drawings outside limits of Project.

B. Base, Surface, and Bedding Material: Load shell, gravel, bituminous, or other base and surfacing material designated for salvage into City trucks.

C. Pipe Culvert: Load culverts designated for salvage into City trucks.

D. Other Salvageable Materials: Conform to requirements of individual Specification Sections.

E. Coordinate loading of salvageable material on City trucks with Project Manager.

3.02 EXCESS MATERIAL

A. Remove and legally dispose of vegetation, rubble, broken concrete, debris, asphaltic concrete pavement, excess soil, and other materials not designated for salvage from job site.

B. Excess soil may be deposited on private property adjacent to Project when written permission is obtained from property owner. See Paragraph 1.02 D above.

C. Verify flood plain status of any proposed disposal site. Do not dispose of excavated materials in area designated as within 100-year Flood Hazard Area unless "Development Permit" has been obtained. Remove excess material placed in "100-year Flood Hazard Area" within the City, without "Development Permit", at no additional cost to the City.

D. Remove waste materials from site daily, in order to maintain site in neat and orderly condition.

END OF SECTION

Section 01578

CONTROL OF GROUND AND SURFACE WATER

PART 1 GENERAL

1.01 SECTION INCLUDES

A. Dewatering, depressurizing, draining, and maintaining trenches, shaft excavations, structural excavations and foundation beds in stable condition, and controlling ground water conditions for tunnel excavations.

B. Protecting work against surface runoff and rising floodwaters.

C. Trapping suspended sediment in the discharge form the surface and ground water control systems.

1.02 MEASUREMENT AND PAYMENT

A. UNIT PRICES

1. When noted, dewatering of trench or excavation during course of project shall be measured per linear foot and paid for at contract unit prices for dewatering, when directed to perform such work by Project Manager. Dewatering must be fully detailed in submittal and submittal must be approved prior to performing dewatering work before payment will be made for dewatering. No payment will be made for work unless directed to perform work by Project Manager.

2. Presence of a pump on project does not constitute dewatering for payment under bid item "Ground Water Control for Open Cut Construction."

3. Dewatering required during course of project to lower water table for other utility installation less than 24 inches in diameter, construction of structures, removal of standing water, surface drainage seepage, or to protect against rising waters or floods shall be considered incidental to Work unless otherwise noted.

4. No separate payment will be made for groundwater control associated with augering, tunnels or casing. Include cost in unit price for augering.

5. Refer to Section 01270 - Measurement and Payment for unit price procedures.

B. Stipulated Price (Lump Sum) Contract. If the Contract is a Stipulated Price Contract, include payment for work under this section in the total Stipulated

Price.

1.03 REFERENCES

A. ASTM D 698 - Standard Test Methods for Laboratory Compaction of Soils Using Standard Effort (12,400 ft-lbf/ft3 (600kN-m/m3)

B. Federal Regulations, 29 CFR Part 1926, Standards-Excavation, Occupational Safety and Health Administration (OSHA)

C. Storm Water Management Handbook for Construction Activities prepared by City of Houston, Harris County and Harris County Flood Control District.

1.04 DEFINITIONS

A. Ground water control system: system used to dewater and depressurize water-bearing soil layers.

1. Dewatering: lowering the water table and intercepting seepage that would otherwise emerge from slopes or bottoms of excavations, or into tunnels and shafts; and disposing of removed water. Intent of dewatering is to increase stability of tunnel excavations and excavated slopes, prevent dislocation of material from slopes or bottoms of excavations, reduce lateral loads on sheeting and bracing, improve excavating and hauling characteristics of excavated material, prevent failure or heaving of bottom of excavations, and to provide suitable conditions for placement of backfill materials and construction of structures and other installations.

2. Depressurization: includes reduction in piezometric pressure within strata not controlled by dewatering alone, necessary to prevent failure or heaving of excavation bottom or instability of tunnel excavations.

B. Excavation drainage: includes keeping excavations free of surface and seepage water.

C. Surface drainage: includes use of temporary drainage ditches and dikes and installation of temporary culverts and sump pumps with discharge lines necessary to protect Work from any source of surface water.

D. Monitoring facilities for ground water control system: includes piezometers, monitoring wells and flow meters for observing and recording flow rates.

1.05 PERFORMANCE REQUIREMENTS

A. Conduct subsurface investigations to identify groundwater conditions and to

provide parameters for design, installation, and operation of groundwater control systems. Submit proposed method and spacing of readings for review prior to obtaining water level readings.

B. Design ground water control system, compatible with requirements of Federal Regulations 29 CFR Part 1926 and Section 02260 - Trench Safety Systems, to produce following results:

1. Effectively reduce hydrostatic pressure affecting:

   a. Excavations

   b. Tunnel excavation, face stability or seepage into tunnels

2. Develop substantially dry and stable subgrade for subsequent construction operations

3. Preclude damage to adjacent properties, buildings, structures, utilities, installed facilities and other work

4. Prevent loss of fines, seepage, boils, quick condition, or softening of foundation strata

5. Maintain stability of sides and bottom of excavations

C. Provide ground water control systems that include single-stage or multiple-stage well point systems, eductor and ejector-type systems, deep wells, or combinations of these equipment types.

D. Provide drainage of seepage water and surface water, as well as water from other sources entering excavation. Excavation drainage may include placement of drainage materials, crushed stone and filter fabric, together with sump pumping.

E. Provide ditches, berms, pumps and other methods necessary to divert and drain surface water from excavation and other work areas.

F. Locate ground water control and drainage systems so as not to interfere with utilities, construction operations, adjacent properties, or adjacent water wells.

G. Assume sole responsibility for ground water control systems and for any loss or damage resulting from partial or complete failure of protective measures and settlement or resultant damage caused by ground water control operations. Modify ground water control systems or operations if they cause or threaten to cause damage to new construction, existing site improvements, adjacent property, adjacent water wells, or potentially contaminated areas. Repair damage caused by ground water control systems or resulting from

failure of system to protect property as required.

H. Install an adequate number of piezometers installed at proper locations and depths, necessary to provide meaningful observations of conditions affecting excavation, adjacent structures and water wells.

I. Install environmental monitoring wells at proper locations and depths necessary to provide adequate observations of hydrostatic conditions and possible contaminant transport from contamination sources into work area or ground water control system.

1.06 SUBMITTALS

A. Conform to requirements of Section 01330 - Submittals Procedures.

B. Submit Ground Water and Surface Water Control Plan for review by Project Manager prior to start of excavation work. Include the following:

1. Results of subsurface investigations and description of extent and characteristics of water bearing layers subject to ground water control

2. Names of equipment Suppliers and installation Subcontractors

3. Description of proposed ground water control systems indicating arrangement, location, depth and capacities of system components, installation details and criteria and operation and maintenance procedures

4. Description of proposed monitoring facilities indicating depths and locations of piezometers and monitoring wells, monitoring installation details and criteria, type of equipment and instrumentation with pertinent data and characteristics

5. Description of proposed filters including types, sizes, capacities and manufacturer's application recommendations

6. Design calculations demonstrating adequacy of proposed systems for intended applications. Define potential area of influence of ground water control operation near contaminated areas.

7. Operating requirements, including piezometric control elevations for dewatering and depressurization

8. Excavation drainage methods including typical drainage layers, sump pump application and other means

9. Surface water control and drainage installations

10. Proposed methods and locations for disposing of removed water

C. Submit following records upon completion of initial installation:

1. Installation and development reports for well points, eductors, and deep wells

2. Installation reports and baseline readings for piezometers and monitoring wells

3. Baseline analytical test data of water from monitoring wells

4. Initial flow rates

D. Submit the following records weekly during control of ground and surface water operations:

1. Records of flow rates and piezometric elevations obtained during monitoring of dewatering and depressurization. Refer to Paragraph 3.02, Requirements for Eductor, Well Points, or Deep Wells.

2. Maintenance records for ground water control installations, piezometers and monitoring wells

1.07 ENVIRONMENTAL REQUIREMENTS

A. Comply with requirements of agencies having jurisdiction.

B. Comply with Texas Commission on Environmental Quality regulations and Texas Water Well Drillers Association for development, drilling, and abandonment of wells used in dewatering system.

C. Obtain necessary permits from agencies with jurisdiction over use of groundwater and matters affecting well installation, water discharge, and use of existing storm drains and natural water sources. Since review and permitting process may be lengthy, take early action to obtain required approvals.

D. Monitor ground water discharge for contamination while performing pumping in vicinity of potentially contaminated sites.

PART 2 P R O D U C T S

2.01 EQUIPMENT AND MATERIALS

A. Select equipment and materials necessary to achieve desired results for dewatering. Selected equipment and materials are subject to review by Project Manager through submittals required in Paragraph 1.06, Submittals.

B. Use experienced contractors, regularly engaged in ground water control system design, installation, and operation, to furnish and install and operate educators, well points, or deep wells, when needed

C. Maintain equipment in good repair and operating condition.

D. Keep sufficient standby equipment and materials available to ensure continuous operation, where required.

E. Portable Sediment Tank System: Standard 55-gallon steel or plastic drums, free of hazardous material contamination.

1. Shop or field fabricate tanks in series with main inlet pipe, inter-tank pipes and discharge pipes, using quantities sufficient to collect sediments from discharge water.

PART 3 EXECUTION

3.01 GROUND WATER CONTROL

A. Perform necessary subsurface investigation to identify water bearing layers, piezometric pressures and soil parameters for design and installation of ground water control systems. Perform pump tests, if necessary to determine draw down characteristics. Present results in the Ground Water and Surface Water Control Plan. submittal

B. Provide labor, material, equipment, techniques and methods to lower, control and handle ground water in manner compatible with construction methods and site conditions. Monitor effectiveness of installed system and its effect on adjacent property.

C. Install, operate, and maintain ground water control systems in accordance with the Ground Water and Surface Water Control Plan. Notify Project Manager in writing of changes made to accommodate field conditions and changes to Work. Provide revised drawings and calculations with notification.

D. Provide continuous system operation, including nights, weekends, and holidays. Arrange appropriate backup if electrical power is primary energy source for dewatering system.

E. Monitor operations to verify systems lower ground water piezometric levels at rate required to maintain dry excavation resulting in stable subgrade for

subsequent construction operations.

F. Depressurize zones where hydrostatic pressures in confined water bearing layers exist below excavations to eliminate risk of uplift or other instability of excavation or installed works. Define allowable piezometric elevations in the Ground Water and Surface Water Control Plan.

G. Removal of ground water control installations.

1. Remove pumping system components and piping when ground water control is no longer required.

2. Remove piezometers, including piezometers installed during design phase investigations and left for Contractor's use, upon completion of testing, as required in accordance with Part 3 of applicable specification.

3. Remove monitoring wells when directed by Project Manager.

4. Grout abandoned well and piezometer holes. Fill piping that is not removed with cement-bentonite grout or cement-sand grout.

H. During backfilling, maintain water level a minimum of 5 feet below prevailing level of backfill. Do not allow the water level to cause uplift pressures in excess of 80 percent of downward pressure produced by weight of structure or backfill in place. Do not allow water levels to rise into cement-stabilized sand until at least 48 hour after placement.

I. Provide uniform pipe diameter for each pipe drain run constructed for dewatering. Remove pipe drains when no longer required. If pipe removal is impractical, grout connections at 50-foot intervals and fill pipe with cement-bentonite grout or cement-sand grout after removal from service.

J. The extent of ground water control for structures with permanent perforated underground drainage systems may be reduced, for units designed to withstand hydrostatic uplift pressure. Provide a means to drain affected portions of underground systems, including standby equipment. Maintain drainage systems during construction operations.

K. Remove systems upon completion of construction or when dewatering and control of surface or ground water is no longer required.

L. Compact backfill to not less than 95 percent of maximum dry density in accordance with ASTM D 698.

M. Foundation Slab: Maintain saturation line at least 3 feet below lowest elevations where concrete is to be placed. Drain foundations in areas where

concrete is to be placed before placing reinforcing steel. Keep free from water for 3 days after concrete is placed.

3.02 REQUIREMENTS FOR EDUCTOR, WELL POINTS, OR DEEP WELLS

A. For aboveground piping in ground water control system, include a 12-inch minimum length of clear, transparent piping between each eductor well or well point and discharge header to allow visual monitoring of discharge from each installation.

B. Install sufficient piezometers or monitoring wells to show that trench or shaft excavations in water bearing materials are pre-drained prior to excavation. Provide separate piezometers for monitoring of dewatering and for monitoring of depressurization. Install piezometers and monitoring wells for tunneling as appropriate for selected method of work.

C. Install piezometers or monitoring wells at least one week in advance of the start of associated excavation.

D. Dewatering may be omitted for portions of under drains or other excavations, where auger borings and piezometers or monitoring wells show that soil is pre-drained by existing systems and that ground water control plan criteria are satisfied.

E. Replace installations that produce noticeable amounts of sediments after development.

F. Provide additional ground water control installations, or change method of control if, ground water control plan does not provide satisfactory results based on performance criteria defined by plan and by specifications. Submit revised plan according to Paragraph 1.06B.

3.03 SEDIMENT TRAPS

A. Install sediment tank as shown on approved plan.

B. Inspect daily and clean out tank when one-third of sediment tank is filled with sediment.

3.04 SEDIMENT SUMP PIT

A. Install sediment sump pits as shown on approved plan.

B. Construct standpipe by perforating 12 inch to 24-inch diameter corrugated metal or PVC pipe.

C. Extend standpipe 12 inches to 18 inches above lip of pit.

D. Convey discharge of water pumped from standpipe to sediment trapping device.

E. Fill sites of sump pits, compact to density of surrounding soil and stabilize surface when construction is complete.

3.05 EXCAVATION DRAINAGE

A. Use excavation drainage methods if well-drained conditions can be achieved. Excavation drainage may consist of layers of crushed stone and filter fabric, and sump pumping, in combination with sufficient ground water control wells to maintain stable excavation and backfill conditions.

3.06 MAINTENANCE AND OBSERVATION

A. Conduct daily maintenance and observation of piezometers or monitoring wells while ground water control installations or excavation drainage is operating at the site, or water is seeping into tunnels, and maintain systems in good operating condition.

B. Replace damaged and destroyed piezometers or monitoring wells with new piezometers or wells as necessary to meet observation schedules.

C. Cut off piezometers or monitoring wells in excavation areas where piping is exposed, only as necessary to perform observation as excavation proceeds. Continue to maintain and make specified observations

D. Remove and grout piezometers inside or outside of excavation area when ground water control operations are complete. Remove and grout monitoring wells when directed by Project Manager.

3.07 MONITORING AND RECORDING

A. Monitor and record average flow rate of operation for each deep well, or for each wellpoint or eductor header used in dewatering system. Also, monitor and record water level and ground water recovery. Record observations daily until steady conditions are achieved and twice weekly thereafter.

B. Observe and record elevation of water level daily as long as ground water control system is in operation, and weekly thereafter until Work is completed or piezometers or wells are removed, except when Project Manager determines more frequent monitoring and recording are required. Comply with Project Manager's direction for increased monitoring and recording and

take measures necessary to ensure effective dewatering for intended purpose.

3.08 SURFACE WATER CONTROL

A. Intercept surface water and divert it away from excavations through use of dikes, ditches, curb walls, pipes, sumps or other approved means. Requirement includes temporary works required to protect adjoining properties from surface drainage caused by construction operations.

B. Divert surface water and seepage water into sumps and pump it into drainage channels or storm drains, when approved by agencies having jurisdiction. Provide settling basins when required by agencies.

END OF SECTION

Section 01580

PROJECT IDENTIFICATION SIGNS

PART 1 GENERAL

1.01 SECTION INCLUDES

A. Project identification sign description.

B. Project sign installation.

C. Maintenance and removal of Project sign.

1.02 SYSTEM DESCRIPTION

A. Sign Construction: Construct signs of new materials in accordance with Standard Detail provided at the Pre-construction Conference.

B. Appearance: Maintain signs to present a clean and neat look throughout Contract duration.

C. Sign Manufacturer: Experienced professional sign company.

D. Sign Placement: At locations shown in Drawings unless otherwise specified by Project Manager at pre-construction meeting.

1. Provide one sign at each end of a linear Project involving paving, overlay, sewer line, storm drainage, or water main construction located in rights-of-ways.

2. Provide one sign for site or building construction Contracts

3. Provide one sign at each site for Contracts with multiple sites.

4. Sign Relocation: As work progresses, relocate signs if directed by Project Manager in writing. Include cost for one relocation of post-mounted signs in Contract Price. Subsequent relocations, if directed by Project Manager in writing, will be subject to Change Order.

E. Skid-mounted signs: Use for projects with noncontiguous locations where work progresses from one location to another. Design skid structure to withstand a 60 mile-per-hour wind load to the face or back of sign using stakes, straps, or ballast. Contractor shall be responsible for security of signs at each site.

1.03 SUBMITTALS

A. Submit Shop Drawings under provisions of Section 01330 - Submittal Procedures.

B. Show content, layout, lettering style, lettering size, and colors. Make sign and lettering to scale, clearly indicating condensed lettering, if used.

PART 2 P R O D U C T S

2.01 SIGN MATERIALS

A. Structure and Framing: Use new sign materials.

1. Sign Posts: 4-inch by 4-inch pressure treated wood posts, 9 feet long for skid mounting and 12 feet long minimum for in-ground mounting.

2. Skid Bracing: 2-inch by 4-inch wood framing material.

3. Skid Members: 2-inch by 6-inch wood framing material.

4. Fasteners:
   a. Galvanized steel.
   b. Attach sign to posts with 1/2-inch by 5-1/2 inch button head carriage bolts and secure with nuts and flat head washers.
   c. Cover button heads with white reflective film or paint to match sign background.
   d. Use metal brackets and braces and 3/4-inch wood screws to attach sign header.

B. Sign and Sign Header: 3/4-inch thick marine plywood. Use 4-foot by 8 -foot sheet for the sign and a single piece for the header to minimize joints. Do not piece wood sheets to fabricate sign face.

C. Paint and Primers: White industrial grade, fast-drying, oil-based paint with gloss finish for structural and framing members, sign, and sign header material surfaces. Paint all sign surfaces prior to adding adhesive applications.

D. Colors:

1. Sign Background: Reflective white 3M Scotchlite Engineer Grade, Pressure Sensitive Sheeting (White), or approved equal.

2. Border: For red border around area, which designates project name and project amount, use reflective red 3M Scotchlite Engineer Grade, Pressure Sensitive Sheeting (Red), or approved equal.

3. Sign Film: 3M Scotchcal Pressure Sensitive Films, or approved equal for legends, symbols, lettering, and artwork. Match colors to 3M Scotchcal Pressure Sensitive Films.

a.	Lettering Below Seal:	Black
b.	Lettering Above Project Name:	Vivid Blue
c.	Lettering on Blue Background:	White
d.	Background Behind Project Name:	Vivid Blue

E. City Seal: Project Manager will provide City seals to Contractor, as needed.

2.02 SIGN LAYOUT

A. Lettering:

1. Style, Size, and Spacing: Helvetica Regular lettering.

2. Condensed Style: Text may be condensed if needed to maintain sign composition.

B. Composition:

1. Lines with Standard Text
   a. Top line shall read "BUILDING TOGETHER FOR THE FUTURE".
   b. Use lower left below City Seal to list names and titles for Mayor, Controller and Council Members. Place as shown on Drawings with indicated size and spacing.
   c. Center telephone number of the Customer Response Center, "311", near the bottom of the area with the blue background.

2. Lines with Variable Text. Use blue background space for Project name and dollar amount.
   a. Project Manager will provide Project name and dollar amount of Project for preparation of sign. Center name on one or two lines, and dollar amount immediately below Project name, in area with blue background. Use condensed lettering if necessary.

2.03 LAYOUT AND COMPOSITION FOR HEADER

A. City of Houston Seal:

1. A space of approximately 24 inches in diameter is provided for the City seal, the top 6 inches of which extends above the sign on the sign header.

2. Construct sign header of same material as sign face. Cut material to match curve of the City seal.

3. Project Manager will provide the seal to be affixed to the sign by sign maker.

PART 3 E X E C U T I O N

3.01 INSTALLATION

A. Install Project identification signs within seven days after Date of Commencement of the Work.

B. Erect signs at locations shown in Drawings unless otherwise designated by Project Manager at pre-construction meeting. Position sign so it is fully visible and readable to general public.

C. Erect sign level and plumb.

D. If mounted on posts, sink posts 3 to 4 feet below grade and stabilize posts to minimize lateral motion. Leave a minimum of 8 feet of post above existing grade for mounting of sign.

E. Erect sign so that top edge of sign is at a nominal 8 feet above existing grade.

3.02 MAINTENANCE AND REMOVAL

A. Keep signs and supports clean. Repair deterioration and damage.

B. Remove signs, framing, supports, and foundations to a depth of at least 2 feet upon completion of Project. Restore area to a condition equal to or better than before construction.

END OF SECTION

PROJECT No.: (FILE NO:)	CONTRACT No.:	REVIEWED BY:

*INSTRUCTIONS TO SIGN MAKER (LIST COMPANY NAME):		
QTY.	ACTION ITEMS:	
	Make new sign(s)	
	Follow City standards attached	
	Provide submittal (drawing) to the City for project sign showing content, layout, lettering style, lettering size, and colors	
VARIABLE TEXT		
Line 1	Project Name:	
Line 2	Project Amount (rounded to nearest $1000):	
ATTACHMENTS INCLUDED		
QTY.	SEALS / LOGOS	
	City of Houston - 24" diameter	
	STANDARDS	
	Standard Specification Section 01580 - Project Identification Signs	
	Standard Detail 01580-02 Construction Sign	

(*Instructions on reverse.*)

INSTRUCTIONS

Contractor produces this form. Contractor shall insert the information and provide the form to the sign maker with Contractor's purchase order.

List PROJECT No., (FILE No.), CONTRACT No., and name of City's Project Manager REVIEWED BY.

INSTRUCTIONS TO SIGN MAKER:

- Give COMPANY NAME of sign maker.
- Indicate QUANTITY of new signs to be made.
- Direction for sign maker to follow City Standards in making signs.
- Require submittals from sign maker, who provides Shop Drawing of Project sign showing content, layout, lettering style, lettering size, and colors.

VARIABLE TEXT:

- Give PROJECT NAME. Write it out in all caps and suggest line break. Lines are required.
- Give Project amount to be listed on sign. Round off to nearest $1000.

ATTACHMENTS INCLUDED:

- **Seals**

  City provides the quantity of City seals required, one for each Project sign.

- **Standards**

  Contractor provides set of Standards to sign maker, including (Specification Section 01580 - Project Identification Signs, and Standard Detail No. 01580-02 - Construction Sign.

Section 01581

EXCAVATION IN PUBLIC WAY PERMIT SIGNS

PART 1 GENERAL

1.01 SECTION INCLUDES

A. Project sign installation.

B. Maintenance and removal of Project sign.

1.02 SYSTEM DESCRIPTION

A. Sign Construction: Construct signs of new materials.

B. Appearance: Maintain signs to present a clean and neat look throughout the Contract duration.

C. Sign Placement: Place signs at each street entrance to street cut excavation.

1.03 SUBMITTALS

A. Submit Shop Drawings under provisions of Section 01330 - Submittal Procedures.

B. Show content, layout, lettering style, lettering size and colors. Make sign and lettering to scale, clearly indicating condensed lettering, if used.

PART 2 PRODUCTS

2.01 SIGN LAYOUT

A. Conform to Texas Manual on Uniform Traffic Control Devices. Minimum size: 36 inches by 36 inches.

B. Lettering: Uppercase Helvetica Regular lettering.

C. Composition: Include on sign copy of street cut permit, title "City of Houston", contracting department's name, address, and emergency telephone number and Contractor's name. Project Manager will provide department name, address, and emergency telephone number for preparation of sign.

PART 3 EXECUTION

3.01 INSTALLATION

A. Install Project signs before commencement of pavement excavation in Public Way.

B. Position sign so it is fully visible and readable to general public.

C. Erect sign level and plumb.

D. Erect sign so that top edge of sign is at a nominal 8 feet above existing grade.

3.02 MAINTENANCE AND REMOVAL

A. Keep signs and supports clean. Repair deterioration and damage.

B. Remove signs, framing, supports and foundations to depth of at least 2 feet upon completion of the Work. Restore area to condition equal to or better than before construction.

END OF SECTION

Section 01610

BASIC PRODUCT REQUIREMENTS

PART 1 GENERAL

1.01 SECTION INCLUDES

A. Requirements for transportation, delivery, handling, and storage of Products.

1.02 PRODUCTS

A. Products: Defined in Document 00700 – General Conditions. Does not include machinery and equipment used for preparation, fabrication, conveying and erection of the Work. Products may also include existing materials or components designated for reuse.

B. For material and equipment specifically indicated or specified to be reused in the work:

1. Use special care in removal, handling, storage and reinstallation, to assure proper function in completed work.

2. Arrange for transportation, storage and handling of products which require off-site storage, restoration or renovation. Include cost in unit price for related items.

C. When contract documents require that installation of work comply with manufacturer's printed Instructions, obtain and distribute copies of such instructions to parties involved in installation, including two copies to Project Manager. Maintain one set of complete instructions at job site during installation until completion.

D. Provide Products from the fewest number of manufacturers as practical, in order to simplify spare parts inventory and to allow for maximum interchangeability of components. For multiple components of the same size, type or application, use the same make and model of component throughout the Work.

1.03 TRANSPORTATION

A. Make arrangements for transportation, delivery, and handling of Products required for timely completion of the Work.

B. Transport and handle Products in accordance with manufacturer's instructions.

C. Consign and address shipping documents to proper party giving name of the Project and its complete street address. Shipments shall be delivered to

Contractor.

1.04 DELIVERY

A. Arrange deliveries of Products to accommodate short-term site completion schedules and in ample time to facilitate inspection prior to Installation. Avoid deliveries that cause lengthy storage or overburden of limit storage space.

B. Coordinate deliveries to avoid conflict with the Work and conditions at the site and to accommodate the following:

1. Work of other contractors or the City.

2. Limitations of storage space.

3. Availability of equipment and personnel for handling Products.

4. The City's use of premises.

C. Have Products delivered to the site in manufacturer's original, unopened, labeled containers.

D. Immediately upon delivery, inspect shipment to assure:

1. Product complies with requirements of the Contract.

2. Quantities are correct.

3. Containers and packages are intact; labels are legible.

4. Products are properly protected and undamaged.

1.05 PRODUCT HANDLING

A. Coordinate off-loading of Products delivered to the site. If necessary during construction, move and relocate stored Products at no additional cost to the City.

B. Provide equipment and personnel necessary to handle Products, including those provided by the City, by methods to prevent damage to Products or packaging.

C. Provide additional protection during handling as necessary to prevent breaking, scraping, marring, or otherwise damaging Products or surrounding areas.

D. Handle Products by methods to prevent over-bending or overstressing.

E. Lift heavy components only at designated lifting points.

F. Handle Products in accordance with manufacturer's recommendations.

G. Do not drop, roll, or skid Products off delivery vehicles. Hand-carry or use Suitable materials handling equipment.

1.06 STORAGAE OF PRODUCTS

A. Store and protect Products in accordance with manufacturer's recommendations and requirements of these Specifications.

B. Make necessary provisions for safe storage of Products. Place Products so as to prevent damage to any part of the Work or existing facilities and to maintain free access at all times to all parts of the Work and to utility service company installations in the vicinity of the Work. Keep Products neatly and compactly stored in locations that will cause minimum inconvenience to other contractors, public travel, adjoining owners, tenants, and occupants. Arrange storage in a manner so as to provide easy access for inspection.

C. Restrict storage to areas available on the site for storage of Products as shown on Drawings or approved by Project Manager.

D. Provide off-site storage and protection when on-site storage is not adequate. Provide addresses of, and access to, off-site storage locations for inspection by Project Manager.

E. Do not use lawns, grass plots, or other private property for storage purposes without written permission of owner or other person in possession or control of premises.

F. Protect stored Products against loss or damage.

G. Store in manufacturers' unopened containers.

H. Neatly, safely, and compactly stack Products delivered and stored along the line of the Work to avoid inconvenience and damage to property owners and general public, and maintain at least 3 feet clearance around fire hydrants. Keep public, private driveways and street crossings open.

I. Repair or replace damaged lawns, sidewalks, streets or other improvements to satisfaction of Project Manager. Total length that Products may be distributed along route of construction at one time is 1000 linear feet, unless otherwise approved in writing by Project Manager.

PART 2 P R O D U C T S - Not Used

PART 3 E X E C U T I O N - Not Used

END OF SECTION

Section 01630

PRODUCT SUBSTITUTION PROCEDURES

PART 1 GENERAL

1.01 SECTION INCLUDES

A. Options for making Product or process selections.

B. Procedures for proposing equivalent Products or processes, including pre-approved, pre-qualified, and approved Products or processes.

1.02 DEFINITIONS

A. Product: As defined in Document 00700 – General Conditions. Product does not include machinery and equipment used for production, fabrication, conveying, and erection of the Work. Products may also include existing materials or components designated for reuse.

B. Process: Any proprietary system or method for installing system components resulting in an integral, functioning part of the Work. For this Section, the word Products includes Processes.

1.03 SELECTION OPTIONS

A. Pre-approved Products: Construction products of certain manufacturers or Suppliers designated in Specifications as "pre-approved." The City maintains a list of pre-approved products. Pre-approved Products for this Project are designated as pre-approved in Specifications. Products of other manufacturers or suppliers are not acceptable for this Project and will not be considered under the submittal process for approving alternate products.

B. Pre-qualified Products: Construction products of certain manufacturers or Suppliers designated in Specifications as "pre-qualified." Pre-qualified Products for this Project are designated as pre-qualified in Specifications. Products of other manufacturers or suppliers are not acceptable for this Project and will not be considered under the submittal process for approving alternate products.

C. Approved Products: Construction products of certain manufacturers or Suppliers designated in Specifications followed by words "or approved equal." Approval of alternate products not listed in Specifications may be obtained through provisions for product options and substitutions in Document 00700 - General Conditions, and by following submittal procedures specified in

Section 01330- Submittal Procedures. The procedure for approval of alternate products is not applicable to pre-approved or pre-qualified products.

D. Product Compatibility: To the maximum extent possible, provide Products that are of the same type or function from a single manufacturer, make, or source. Where more than one choice is available, select Product that is compatible with other Products already selected, specified, or in use by the City.

1.04 CONTRACTOR'S RESPONSIBILITY

A. Responsibility related to Product options and substitutions is defined in Document 00700 - General Conditions.

B. Furnish information Project Manager deems necessary to judge equivalency of alternate Product.

C. Pay for laboratory testing, as well as any other review or examination costs, needed to establish equivalency between products in order to obtain information upon which Project Manager can base a decision.

D. If Project Manager determines alternate product is not equal to that named in Specifications, Furnish one of the specified Products.

1.05 CITY REVIEW

A. Use alternate Products only when approved in writing by Project Manager. Project Manager's determination regarding acceptance of proposed alternate Product is final.

B. Alternate Products shall be accepted if Products are judged by Project Manager to be equivalent to specified Product or to offer substantial benefit to the City.

C. The City retains the right to accept any Product deemed advantageous to the City, and similarly, to reject any product deemed not beneficial to City.

1.06 SUBSTITUTION PROCEDURE

A. Collect and assemble technical information applicable to the proposed Product to aid in determining equivalency as related to the approved Product specified.

B. Submit a written request for a construction Product to be considered as an alternate Product.

C. Submit Product information after the effective date of the Contract and within the time period allowed for substitution submittals given in Document 00700 - General Conditions. After the submittal period has expired, requests for alternate Products shall be considered only when specified Product becomes unavailable because of conditions beyond Contractor's control.

D. Submit five copies of each request for alternate Product approval. Include the following information:

1. Complete data substantiating compliance of proposed substitution with the Contract.

2. For Products:
   a. Product identification, including manufacturer's name and address.
   b. Manufacturer's literature with Product description, performance and test data, and reference standards.
   c. Samples, as applicable.
   d. Name and address of similar projects on which Product was used and date of installation. Include names of Owner, design consultant, and installing contractor.

3. For construction methods:
   a. Detailed description of proposed method.
   b. Drawings illustrating methods.

4. Itemized comparison of proposed substitution with Product or method specified.

5. Data relating to changes in Construction Schedule.

6. Relation to separate contracts, if any.

7. Accurate cost data on proposed substitution in comparison with Product or method specified.

8. Other information requested by Project Manager.

E. Approved alternate Products will be subject to the same review process as the specified Product would have been for Shop Drawings, Product Data, and Samples.

PART 2 P R O D U C T S - Not Used

PART 3 E X E C U T I O N - Not Used

END OF SECTION

Section 01725

FIELD SURVEYING

PART 1 GENERAL

1.01 QUALITY CONTROL

A. Conform to State of Texas laws for surveys requiring licensed surveyors. Employ a surveyor acceptable to Project Manager if required by the Contract.

1.02 MEASUREMENT AND PAYMENT

A. UNIT PRICES

1. No separate payment will be made for field surveying. Include cost in unit price for related items.

1.03 SUBMITTALS

A. Conform to requirements of Section 01330 - Submittal Procedures.

B. Submit name, address, and telephone number of Surveyor to Project Manager before starting survey work.

C. Submit documentation verifying accuracy of survey work on request.

D. Submit certificate signed by Surveyor, that elevations and locations of the Work are in conformance with the Contract.

1.04 PROJECT RECORD DOCUMENTS

A. Maintain a complete and accurate log of control and survey work as it progresses.

B. Prepare a certified survey setting forth dimensions, locations, angles, and elevations of construction and site work upon completion of foundation walls and major site improvements.

C. Submit record documents under provisions of Section 01785 - Project Record Documents.

1.05 EXAMINATION

A. Verify locations of survey control points prior to starting the Work.

B. Notify Project Manager immediately if any discrepancies are discovered.

1.06 SURVEY REFERENCE POINTS

A. The City will establish survey control datum as provided in Document 00700 - General Conditions and as indicated on Drawings. Inform Project Manager in Advance of time horizontal and vertical control points will be established so

verification deemed necessary by Project Manager may be done with minimum inconvenience to the City or Contractor.

B. Locate and protect survey control points prior to starting site work; preserve permanent reference points during construction.

C. Notify Project Manager a minimum of 48 hours before relocation of reference points is needed due to changes in grades or other reasons.

D. Promptly report loss or destruction of reference points to Project Manager.

E. Reimburse the City for cost of reestablishment of permanent reference points disturbed by construction operations.

1.07 SURVEY REQUIREMENTS

A. Utilize recognized engineering survey practices.

B. Establish a minimum of two permanent benchmarks on site, referenced to established control points. Record horizontal and vertical location data on Project record documents.

C. Establish elevations, lines and levels to provide quantities required for measurement and payment and for appropriate controls for the Work. Locate and lay out the following with appropriate instruments:

1. Site improvements including grading, fill and topsoil placement, utilities, and footings and slabs

2. Grid or axis for structures

3. Building foundation, column locations, and ground floor elevations

D. Periodically verify layouts.

PART 2 P R O D U C T S - Not Used

PART 3 E X E C U T I O N - Not Used

END OF SECTION

Section 01731

CUTTING AND PATCHING

PART 1 GENERAL

1.01 SECTION INCLUDES

A. Cutting, patching and fitting of the Work or work under construction. Coordinating Installation or connection of the Work to existing facilities, or uncovering work for access, inspection or testing and related submittals.

1.02 MEASUREMENT AND PAYMENT

A. UNIT PRICES

1. No separate payment will be made for cutting and patching. Include cost in unit price for related items.

1.03 CUTTING AND PATCHING

A. Perform activities to avoid interference with facility operations and work of others in accordance with Document 00700 - General Conditions of Contract.

B. Execute cutting and patching, including excavation, backfill and fitting to:

1. Remove and replace defective work or work not conforming to Drawings and Specifications;

2. Take samples of installed work as required for testing;

3. Remove construction required to provide for specified alterations or additions to existing work;

4. Uncover work to allow inspection or reinspection by Project Manager or regulatory agencies having jurisdiction;

5. Connect uninstalled work to completed work in proper sequence;

6. Remove or relocate existing utilities and pipes that obstruct work;

7. Make connections or alterations to existing or new facilities;

8. Provide openings, channels, chases and flues and cut, patch, and finish; if required; or

9. Provide protection for other portions of the Work.

C. Restore existing work to a condition equal to or better than that which existed Prior to cutting and patching, and to standards required by Specifications.

D. Support, anchor, attach, match, trim and seal materials to work of others. Unless otherwise specified, Furnish and Install sleeves, inserts, and hangers required for execution of the Work.

E. Provide shoring, bracing and support necessary to maintain structural integrity and to protect adjacent work from damage during cutting and patching. Request written approval from Project Manager, before cutting structural members such as beams, anchors, lintels, or other supports. Follow approved submittals, as applicable.

F. Match new materials to existing materials by bonding, lapping, mechanically tying, anchoring or other effective means in order to prevent cracks and to minimize evidence of patching. Conceal effects of demolition and patching by blending new construction to existing surfaces. Avoid obvious breaks, joints or changes of surface appearance unless shown on Drawings or authorized by Project Manager.

1.04 SUBMITTALS

A. Conform to requirements of Section 01330 - Submittal Procedures.

B. Submit a written request to Project Manager for consent to proceed, before conducting cutting operations that might affect structural integrity, design function, City operations, or work of another contractor.

C. Include the following in submittal:

1. Identification of Project

2. Description of affected work

3. Necessity for cutting

4. Effect on other work and on structural integrity

5. Describe the proposed work including:
   a. Scope of cutting and patching
   b. Contractor, Subcontractor or Supplier who will execute the work
   c. Proposed Products
   d. Extent of refinishing
   e. Schedule of operations

6. Alternatives to cutting and patching

D. When work conditions or schedules dictate the need for change of materials or methods, submit a written recommendation to Project Manager that includes:

1. conditions necessitating the change;

2. recommendations for alternative materials or methods; and

3. submittals required for proposed substitutions

E. Notify Project Manager in writing when work will be uncovered for observation. Do not begin cutting or patching operations until authorized by Project Manager.

1.05 CONNECTIONS TO EXISTING FACILITIES

A. Perform construction operations necessary to complete connections and tie-ins to existing facilities. Keep existing facilities in continuous operation unless otherwise permitted in the Specifications or approved in writing by Project Manager.

B. Coordinate interruption of service requiring connection to existing facilities with Project Manager. Do not bypass wastewater or sludge to waterways. Provide temporary pumping facilities to handle wastewater if necessary. Use temporary bulkheads to minimize disruption. Provide temporary power and piping to facilitate construction where necessary.

C. Submit a detailed schedule of proposed connections, including shut-downs and tie-ins. Include proposed time and date as well as anticipated duration of work. Coordinate the connection schedule with the construction schedule.

1. Submit specific times and dates to Project Manager at least 48 hours in advance of proposed work.

D. Procedures and Operations:

1. Operate existing pumps, valves and gates in required sequence under supervision of Project Manager. Do not operate valves, gates or other items of equipment without Project Manager's knowledge.

2. If possible, test equipment under operating conditions before making final tie-ins to connect equipment to existing facility.

3. Coordinate work and schedules. Notify Project Manger at least 48 Hours before shutdowns or bypasses are required.

PART 2 P R O D U C T S Not Used

PART 3 E X E C U T I O N Not Used

END OF SECTION

Section 01732

PROCEDURE FOR WATER VALVE ASSISTANCE

PART 1 G E N E R A L

1.01 SECTION INCLUDES

A. Operation of valves. City of Houston employees will operate existing valves. Contractor's employees may operate new valves included in the Project prior to acceptance by the City.

1.02 PROCEDURE

A. Perform activities listed in Exhibit A attached to this Section.

1.03 SUBMITTALS

A. Submit request for work order planning meetings in accordance with Exhibit A. Include information listed in Step 1 of Exhibit A, attached to this Section.

1.04 CANCELLATION

A. Contractor, Project Manager, or Public Utilities Division may cancel a scheduled valve assistance appointment at no extra cost or payment to Contractor. Contractor shall notify City's appointed Project Inspector ("Inspector") 24 hours in advance of cancellation. Inspector shall notify Central Operation Service (COS) immediately upon receipt of cancellation notice. Cancellation may be caused by bad weather, preparation work taking longer than anticipated, or unforeseen delays by one or more of the three parties.

PART 2 P R O D U C T S - Not Used

PART 3 E X E C U T I O N - Not Used

END OF SECTION

PAGE LEFT INTENTIONALLY BLANK

EXHIBIT A

PROCEDURE FOR VALVE ASSISTANCE

The following procedure will be used by Utility Maintenance Branch personnel when completing a service request from individual Contractors, through Inspector, for operation of existing water valves.

ROUTINE VALVE ASSISTANCE REQUEST (NON-EMERGENCY JOBS):

Step 1. a. When notified by Contractor, Inspector will schedule a work order planning meeting by calling Central Operation Service (COS) at **(713) 295-5521** and providing information shown below. The work order planning meeting shall be conducted a minimum of three days after the request; excluding weekends, holidays, inclement weather days, and the day of the call.

Location of Work (Street Intersection)	Project #
Project Description	Contractor (Company Name)
Job Superintendent's Name	Superintendent's Office #/Mobile #/Pager #
Contractor's Emergency Information	Name and Phone #/Mobile #/Pager #
Inspector/Senior Inspector	Name, Phone #/Mobile #/Pager #
Date & Time assistance is requested	

b. COS will create a work order for each wet connection, cut and plug, etc. that will be designated as a "Code 40" (Private Contractor).

c. COS will give Inspector the work order number. This work order number must be used as a reference in all communications regarding this request for Valve Assistance.

d. Valve personnel must have the work order number on their route sheet. When valve personnel arrive at the job site for the Work Order Planning Meeting between Inspector, Contractor, and Utility Maintenance valve personnel, they will verify the street intersection and work order number with the Inspector before beginning Work Order Planning Meeting.

e. During Work Order Planning Meeting, the work to be performed will be outlined and the actual date work will be performed will be mutually determined by Inspector, Contractor and City's Utility Maintenance Division valve personnel, based upon relevant factors such as preparatory work needed, customer requirements, etc.

f. Valve personnel will perform work specifically outlined in the work order requested. Also, Utility Maintenance Branch valve personnel will only operate existing water valves. Inspector must contact COS and request a new work order for additional work.

g. Valve personnel will contact the dispatcher and advise when the job is complete. Valve personnel will list all appropriate information on the Crew Activity Report.

Step 2. Should valve personnel not be able to keep an appointment to provide valve assistance, Utility Maintenance Branch will provide notification to appropriate Inspector by phone at least 24 hours prior, with that fact and rescheduling information, if available.

Step 3. Inspector will notify COS if valve personnel have not arrived at the site within 30 minutes of scheduled appointment. If Contractor is not ready when valve operator arrives to provide valve assistance, the City shall charge Contractor $50.00 per hour, starting 15 minutes after the scheduled appointment time, minimum one hour charge.

Step 4. Contractor will not be due delay claims or downtime if Utility Maintenance Branch has notified Inspector that they will not be able to provide valve assistance as scheduled.

Step 5. Test installed new valves in the presence of Inspector before substantial completion inspection is scheduled. Place new valves in open position on or before the Date of Substantial Completion.

Step 6. Project Manager will notify, in writing, Utility Maintenance Branch two months before the warranty expires to report any problems they have with new water lines. Project Manager will notify Contractor about these problems.

EMERGENCY REQUEST FOR VALVE ASSISTANCE PROCEDURE:

Step 1. When notified by Contractor, Inspector will request emergency Valve Assistance due to a broken line/service, etc. by calling COS at **(713) 295-5521** and providing the following information:

Location of Work (Street Intersection)	Project #
Project Description	Superintendent's Office #/Mobile #/Pager #
Contractor (Company Name)	Name and Phone #/Mobile #/Pager #
Job Superintendent's Name	Name, Phone #/Mobile #/Pager #
Contractor's Emergency Information	
Inspector/Senior Inspector	
Date & Time assistance is requested	

Step 2. COS will create an emergency work order number and describe the work to be performed.

Step 3. COS will give Inspector the emergency work order number. Reference work order number in all communications regarding request for Valve Assistance.

Step 4. COS will contact designated valve personnel and assign emergency work order. Dispatcher will follow standard COS procedures if this situation occurs after normal working hours.

Step 5. Valve personnel must have the emergency work order number on the route sheet. When valve personnel arrive at the job site for emergency work, they will verify the street intersection and emergency work order number with Inspector prior to beginning work requested for operating existing water valves. Valve personnel will coordinate verification of street intersection and work order number with Inspector prior to performing work.

SUPPLEMENTARY SPECIFICATION

Section 01740

SITE RESTORATION

The following supplement modifies Specification Section 01740. Where a portion of the Specification is modified or deleted by this Supplementary Specification, the unaltered portions of the Specification shall remain the effect

PART 1 GENERAL

1.03 DEFINITIONS: Add paragraph 1.03D as follows:

D. Removal and reinstallation: includes the removal of existing street signs to storage and reinstallation of the stored signs.

END OF SECTION

Approved by

Harish Jajoo, P.E.
Managing Engineer
Storm Water Engineering Section

-30-2010
Date

Section 01740

SITE RESTORATION

PART 1 G E N E R A L

1.01 SECTION INCLUDES

A. Restoration of site affected by the Work in public or private property, including pavement, esplanades, sidewalks, driveways, fences, lawns and landscaping.

1.02 MEASUREMENT AND PAYMENT

A. Unit Prices.

1. Payment for restoration of Project site disturbed by utility construction operations is on a linear foot basis. Measurement will be as provided for corresponding utility in each Specification section. No separate payment made for branch pipe, valves and, other associated work for utilities. Measurement for restoration with multiple utilities within the same right-of-way will be on a linear foot basis for only one utility.

2. No separate payment made for facility or roadway projects. Include cost in the surface improvements associated with the facility or roadway construction.

3. Payment includes required site restoration within the right-of-way or easement regardless of size or type of pipe, method of construction, paved or unpaved areas or thickness and width of pavement.

4. No separate payment made for site restoration for service connections under this Section. Include cost in appropriate utility section.

5. Refer to Section 01270 – Measurement and Payment for Unit Price procedures.

B. Stipulated Price (Lump Sum) Contracts. If Contract is Stipulated Price Contract, include payment for work under this section in total Stipulated Price.

1.03 DEFINITIONS

A. Phase: Locations identified on the plans and listed in Section 1110 – Summary of Work under Work Sequence.

B. Site Restoration: Replacement or reconstruction of Site Improvements located in rights-of-way, easements, public property, and private property affected or altered by the Work.

C. Site Improvement: Includes pavement, curbs and gutters, esplanades, sidewalks, driveways, fences, lawns, irrigation systems, landscaping, and other improvements in existence at the Project site before commencement of construction operations.

1.04 SUBMITTALS

A. Conform to requirements of Section 01330 - Submittal Procedures.

B. Schedule of testing, service connections, abandonment, backfill, and site restoration.

C. Sample of notices to residents outlining their responsibility for maintenance of site improvements adjacent to the Project that are not disturbed by construction operations

1.05 SCHEDULING

A. Schedule testing, service connections, abandonment, backfill and site restoration immediately following completion of pipe laying work or paving within each block or line segment.

B. Phased Construction:

1. Commencement of subsequent Phase will follow scheduling of site restoration of prior Phase. Limit work to a maximum of two Phases of the project.

C. Construction of Projects with no Phases listed in Section 01110- Summary of Work:

1. Complete site restoration prior to disturbing over 50% of total project linear feet or 2,000 linear feet, whichever is greater, of right-of-way or easement.

2. Limit work to a maximum of 50% of total project linear feet or 2,000 linear feet, whichever is greater, of right-of-way and easement. Commence work in additional right-of-way or easement after completion of site restoration.

PART 2 PRODUCTS

2.01 MATERIALS

A. Pavement, Sidewalks and Driveways: Materials specified in Section 02951 - Pavement Repair and Resurfacing.

B. Seeding and Sodding: Sod specified in Section 02922 - Sodding and Seed specified in Section 02921 - Hydromulch Seeding.

C. Trees, Shrubs and Plantings: Conform to requirements of Section 01562 – Tree and Plant Protection.

PART 3 EXECUTION

3.01 Preparatory Work

A. Provide cleanup and restoration crews to work closely behind pipe laying and roadway construction crews, and where necessary, during testing, service restoration, abandonment, backfill and surface restoration.

B. Water Lines: Unless otherwise approved by Project Manager, comply with the following:

1. Once Project Manager approves work within a Phase, immediately begin preparatory work for disinfection effort.

2. No later than three days after completing disinfection preparatory work, submit to City appropriate request for disinfection.

3. If City fails to perform initial disinfection of lines in accordance with Section 2514 - Disinfection of Water Lines, within seven days from submission of appropriate request, and if approved by Project Manager, pipe laying operations may continue beyond approved limits until the City responds.

4. Immediately after transfer of services, begin abandonment of old water lines and site restoration.

C. Wastewater Lines:

1. Once Project Manager approves work within a Line Segment, immediately begin preparatory work for testing effort.

2. No later than three days after completing preparatory work for testing, initiate testing work.

3. Immediately after transfer of service connections, begin abandonment of old wastewater lines, and site restoration.

D. Street Construction and Paving Projects

1. Once Project Manager approves work within a Line Segment or block, immediately begin preparatory work for testing effort.

2. No later than three days after completing preparatory work for testing, initiate testing work.

3. Immediately after testing begin site restoration.

E. Street Construction and Paving Projects

1. Once Project Manager approves work within a block, immediately begin preparatory work for sidewalk construction, sodding and hydromulching and tree planting.

2. No later than seven days after completing preparatory work, initiate construction.

3.02 CLEANING

A. Remove debris and trash to maintain a clean and orderly site in accordance with requirements of General Conditions and Section 01576 - Waste Material Disposal.

3.03 LANDSCAPING AND FENCES

A. Seeding and Sodding.

1. Remove construction debris and level area with bank sand so that new grass surface matches level of existing grass and maintains pre-construction drainage patterns. Level and fill minor ruts or depressions caused by construction operations with bank sand, where grass is still viable.

2. Restore previously existing turfed areas with sod and fertilize in accordance with Section 02922 - Sodding. Sod to match existing turf.

3. Restore unpaved areas not requiring sodding with hydromulch seeding conforming to Section 02921 - Hydromulch Seeding.

B. Trees, Shrubbery and Plants.

1. Remove and replant trees, shrubs, and plants in accordance with requirements of Section 01562 – Tree and Plant Protection.

C. Fence Replacement.

1. Replace removed or damaged fencing to equal or better condition than existed prior to construction, including concrete footings and mow strips. Provide new wood posts, top and bottom railing and panels. Metal fencing material, not damaged by the Work, may be reused.

2. Remove and dispose of damaged or substandard material.

3.04 MAINTENANCE

A. Maintain shrubs, plantings, sodded areas and seeded areas.

B. Replace shrubs, plantings and seeded or sodded areas that fail to become established.

C. Refer to Section 01562 - Tree and Plant Protection, Section 02921 - Hydromulch Seeding and Section 02922 - Sodding for maintenance requirements.

END OF SECTION

Section 01755

STARTING SYSTEMS

PART 1 G E N E R A L

1.01 SECTION INCLUDES

A. Starting systems.

B. Demonstration and instructions.

C. Testing, adjusting and balancing.

PART 2 P R O D U C T S - Not Used

PART 3 E X E C U T I O N

3.01 PREPARATION

A. Coordinate schedule for start-up of various equipment and systems.

B. Notify Project Manager seven days prior to startup of each item.

C. Verify each piece of equipment or system has been checked for proper lubrication, drive rotation, belt tension, control sequence, or other damage-causing conditions.

D. Verify tests, meter readings, and specified electrical characteristics agree with those required by equipment or system manufacturer.

E. Verify wiring and support components for equipment are complete and tested.

F. Execute start-up under supervision in accordance with manufacturer's instructions.

G. When specified in individual Specification sections, require manufacturer to provide an authorized representative to be present at the site to inspect, check and approve equipment or system installation prior to start-up, and to supervise placing equipment or system in operation.

H. Submit written report indicating that equipment or system has been properly installed and is functioning correctly.

3.02 DEMONSTRATION AND INSTRUCTIONS

A. Demonstrate operation and maintenance of Products to Project Manager two weeks prior to Date of Substantial Completion.

B. Utilize O&M Manuals as the basis for instruction. Review contents of manual with Project Manager in detail to explain aspects of operation and maintenance.

C. Demonstrate start-up, operation, control, adjustment, trouble-shooting, servicing, maintenance, and shutdown of each item of equipment at agreed-upon times, at the equipment location.

D. Prepare and insert additional data in O&M Manuals when the need for additional data becomes apparent during instruction.

E. At a minimum, Contractor will demonstrate the following:

1. Products and procedures to be used in maintaining various surfaces, e.g., counter tops, toilet partitions, tile floors and carpeting;

2. procedures to set and maintain landscape irrigation system;

3. procedures to set and maintain security and fire alarm systems; and

4. procedures to set and maintain HVAC systems.

3.03 TESTING, ADJUSTING AND BALANCING

A. Contractor shall appoint, employ and pay for the services of an independent firm to perform testing, adjusting and balancing.

B. Submit reports by the independent firm to Project Manager describing observations and results of tests and signifying compliance or non-compliance with specified requirements and requirements of the Contract.

END OF SECTION

Section 01770

CLOSEOUT PROCEDURES

PART 1 GENERAL

1.01 SECTION INCLUDES

A. Procedures to establish Date of Substantial Completion.

B. Closeout procedures for final submittals, O&M data, warranties, spare parts and maintenance materials.

C. Texas Department of Licensing and Regulation (TDLR) inspection for Texas Accessibility Standards (TAS) compliance.

1.02 SUBSTANTIAL COMPLETION

A. Comply with Document 00700 - General Conditions regarding Date of Substantial Completion when Contractor considers the Work, or portion thereof designated by Project Manager, to be substantially complete.

B. Insure the following items have been completed when included in the Work, prior to presenting a list of items to be inspected by Project Manager for issuance of a Certificate of Substantial Completion:

1. cutting, plugging, and abandoning of water, wastewater, and storm sewer lines, as required by Contract documents for each item;

2. construction of, and repairs to, pavement, driveways, sidewalks, and curbs and gutters;

3. sodding and hydromulch seeding, unless waived by Project Manager in writing;

4. general clean up including pavement markings, transfer of services, successful testing and landscape;

5. additional requirements contained in Section 01110 - Summary of Work.

C. Assist Project Manager with inspection of Contractor's list of items and complete or correct the items, including items added by Project Manager, within specified time period.

D. Should Project Manager's inspection show failure of Contractor to comply with requirements to obtain Date of Substantial Completion, including those items in Paragraph 1.02 B. of this section, Contractor shall complete or correct the items, before requesting another inspection by Project Manager.

1.03 CLOSEOUT PROCEDURES

A. Comply with Document 00700 - General Conditions regarding final completion and final payment when the Work is complete and ready for Project Manager's final inspection.

B. Provide Project Record Documents in accordance with Section 01785 - Project Record Documents.

C. Complete or correct items on punch list, with no new items added. Address new items during warranty period.

D. The City will occupy portions of the Work as specified in other sections.

1.04 FINAL CLEANING

A. Execute final cleaning prior to final inspection.

B. For facilities, clean interior and exterior glass and surfaces exposed to view; remove temporary labels, stains and foreign substances, polish transparent and glossy surfaces, vacuum carpeted and soft surfaces.

C. Clean equipment and fixtures to sanitary condition.

D. Clean or replace filters of operating equipment.

E. Clean debris from roofs, gutters, down spouts, and drainage systems.

F. Clean site; sweep paved areas, and rake clean landscaped surfaces.

G. Remove waste and surplus materials, rubbish, and temporary construction facilities from site following final test of utilities and completion of the Work.

1.05 ADJUSTING

A. Adjust operating equipment to ensure smooth and unhindered operation. Value of this testing and adjusting is five percent of Lump Sum Price in the Schedule of Values for item being tested.

1.06 OPERATION AND MAINTENANCE DATA

A. Submit O&M data as noted in Section 01330 - Submittal Procedures.

B. Five percent of lump sum amount of each piece of equipment as indicated in Schedule of Unit Price Work or Schedule of Values will be paid after the required O&M data submittals are received and approved by Project Manager.

1.07 WARRANTIES

A. Provide one original of each warranty from Subcontractors, Suppliers, and manufacturers.

B. Provide Table of Contents and assemble warranties in a 3-ring/D binder with durable plastic cover.

C. Submit warranties prior to final progress payment.

D. Warranties shall commence in accordance with the requirements in Document 00700 - General Conditions.

1.08 SPARE PARTS AND MAINTENANCE MATERIALS

A. Provide Products, spare parts, maintenance and extra materials in quantities specified in individual Specification sections.

B. Deliver to a location within the City limits as directed by Project Manager. Applicable items must be delivered prior to issuance of a final Certificate for Payment.

PART 2 P R O D U C T S - Not Used

PART 3 E X E C U T I O N - Not Used

END OF SECTION

Section 01782

OPERATIONS AND MAINTENANCE DATA

PART 1 G E N E R A L

1.01 SECTION INCLUDES

A. Submittal requirements for equipment and facility Operations and Maintenance (O&M) Manuals

1.02 MEASUREMENT AND PAYMENT

A. Measurement for equipment O&M Manuals is on a lump sum basis equal to five percent of the individual equipment value contained in Schedule of Unit Prices or Schedule of Values. The lump sum amount may be included in the first Progress Payment following approval of the O&M Manuals by Project Manager.

1.03 SUBMITTALS

A. Conform to requirements of Section 01330 - Submittal Procedures. Submit a list of O&M Manuals and parts manuals for equipment to be incorporated into the Work.

B. Submit documents with 8-1/2 x 11-inch text pages, bound in 3-ring/D binders with durable plastic covers.

C. Print "OPERATION AND MAINTENANCE INSTRUCTIONS", Project name, and subject matter of binder on covers when multiple binders are required.

D. Subdivide contents with permanent page dividers, logically organized according to the Table of Contents, with tab titling clearly printed under reinforced laminated plastic tabs.

E. O&M Manual contents: Prepare a Table of Contents for each volume, with each Product or system description identified.

1. Part 1 - Directory: Listing of names, addresses, and telephone numbers of Design Consultant, Contractor, Subcontractors, and major equipment Suppliers.

2. Part 2 - O&M instructions arranged by system. For each category, identify names, addresses, and telephone numbers of Subcontractors and Suppliers and include the following:
   a. Significant design criteria.
   b. List of equipment.
   c. Parts list for each component.
   d. Operating instructions.
   e. Maintenance instructions for equipment and systems.
   f. Maintenance instructions for special finishes, including recommended cleaning methods and materials and special precautions identifying detrimental agents.

3. Part 3 - Project documents and certificates including:
   a. Shop Drawings and relevant data.
   b. Air and water balance reports.
   c. Certificates.
   d. Photocopies of warranties.

F. Submit two copies of O&M Manuals and parts manuals, for review, within one month prior to placing the equipment or facility in service.

G. Submit one copy of completed volumes in final form 10 days prior to final inspection. One copy with Project Manager comments will be returned after final inspection. Revise content of documents based on Project Manager's comments prior to final submittal.

H. Revise and resubmit three final volumes within 10 days after final inspection.

1.04 EQUIPMENT O&M DATA

A. Furnish O&M Manuals, prepared by manufacturers for all equipment. Manuals must contain, as a minimum, the following:

1. Equipment functions, normal operating characteristics, and limiting conditions.

2. Assembly, Installation, alignment, adjustment, and checking instructions.

3. Operating instructions for start-up, normal operation, regulation and control, normal shutdown, and emergency shutdown.

4. Detailed drawings showing the location of each maintainable part and lubrication point with detailed instructions on disassembly and reassembly of the equipment.

5. Troubleshooting guide.

6. Spare parts list, predicted life of parts subject to wear, lists of spare parts recommended to be on hand for both initial start-up and for normal operating inventory, and local or nearest source of spare parts availability.

7. Outline, cross-section, and assembly drawings with engineering data and wiring diagrams.

8. Test data and performance curves.

B. Furnish parts manuals for all equipment, prepared by the equipment manufacturer, which contain, as a minimum, the following:

1. Detailed drawings giving the location of each maintainable part.

2. Spare parts list with predicted life of parts subject to wear, lists of spare parts recommended on hand for both initial start-up and for normal operating inventory, and local or nearest source of spare parts availability.

PART 2 P R O D U C T S - Not Used

PART 3 E X E C U T I O N - Not Used

END OF SECTION

Section 01785

PROJECT RECORD DOCUMENTS

PART 1 G E N E R A L

1.01 SECTION INCLUDES

A. Maintenance and submittal of record documents and Samples.

1.02 MAINTENANCE OF DOCUMENTS AND SAMPLES

A. Maintain one record copy of documents at the site in accordance with Document 00700 - General Conditions.

B. Store record documents and Samples in field office, if a field office is required by the Contract, or in a secure location. Provide files, racks, and secure storage for record documents and Samples.

C. Label each document "PROJECT RECORD" in neat, large, printed letters.

D. Maintain record documents in a clean, dry, and legible condition. Do not us record documents for construction purposes. Do not use permit drawings to record Modifications to the Work.

E. Keep record documents and Samples available for inspection by Project Manager.

F. Bring record documents to progress review meetings for viewing by Project Manager and, if applicable, Design Consultant.

1.03 RECORDING

A. Record information legibly with red ink pen on a set of blueline opaque drawings, concurrently with construction progress. Maintain an instrument on site at all times for measuring elevations accurately. Do not conceal work until required information is recorded

B. Contract Drawings and Shop Drawings: Mark each item to record completed Modifications, or when minor deviations exist, the actual construction including:

1. Measured depths of elements of foundation in relation to finish first floor datum.
2. Measured horizontal locations and elevations of Underground Facilitie and appurtenances, referenced to permanent surface improvements.

3. Elevations of Underground Facilities referenced to City of Houston benchmark utilized for the Work.

4. Measured locations of internal utilities and appurtenances concealed in construction, referenced to visible and accessible features of the Work.

5. Dimensions and details of field changes

6. Changes made by Modifications.

7. Details not on original Drawings.

8. References to related Shop Drawings and Modifications.

C. Survey all joints of water mains at the time of construction. Record on Drawings, water main invert elevation, elevation top of manway, and centerline horizontal location relative to baseline.

D. For large diameter water mains, mark specifications and addenda to record:

1. Manufacturer, trade name, catalog number and Supplier of each Product actually Installed.

2. Changes made by Modification or field order.

3. Other matters not originally specified.

E. Annotate Shop Drawings to record changes made after review.

1.04 SUBMITTALS

A. At closeout of the Contract, deliver Project record documents to Project Manager.

PART 2 P R O D U C T S - Not Used

PART 3 E X E C U T I O N - Not Used

END OF SECTION

SUPPLEMENTARY SPECIFICATION
Section 02084

FRAMES, GRATES, RINGS, AND COVERS

The following supplement modifies Specification Section 02084. Where a portion of the Specification is modified or deleted by this Supplementary Specification, the unaltered portions of the Specification shall remain the effect

PART 1 GENERAL

1.02 MEASUREMENT AND PAYMENT: Add paragraph 1.02. A.4 through A.6 as follows:

A. Unit Prices.

4. Measurement for bolts of all sizes and materials, as included in Section 00410B – Bid Form, Part B, is on unit price basis for each bolt installed.

5. Payment for bolts includes the bolt, all appurtenances, and labor necessary for complete installation of each bolt.

6. Measurement and payment to remove and replace grates bolted or non-bolted, is on unit price basis for each grate removed and replaced.

PART 3 EXECUTION

3.01 INSTALLATION: Add paragraph 3.01 E. as follows

E. Orientation of bars on installation of ring grates shall be vertical only.

END OF SECTION

Approved by

Harish Jajoo, P.E.
Managing Engineer
Storm Water Engineering Section

3/30/2010
Date

Section 02084

FRAMES, GRATES, RINGS, AND COVERS

PART 1 GENERAL

1.01 SECTION INCLUDES

A. Iron castings for manhole frames and covers, inlet frames and grates, catch basin frames and grates, meter vault frames and covers, adjustment rings, and extensions.

B. Ring grates.

C. Trench Drainage

D. Tree Grates

1.02 MEASUREMENT AND PAYMENT

A. Unit Prices.

1. No payment will be made for frames, grates, rings, covers, and seals under this Section. Include payment in unit price for related item.

2. Payment to rack over existing manhole is on a unit price basis for each manhole.

3. Refer to Section 01270 - Measurement and Payment for unit price procedures

B. Stipulated Price (Lump Sum). If Contract is Stipulated Price Contract, payment for Work in this Section is included in total Stipulated Price.

1.03 REFERENCES

A. AASHTO - American Association of State Highway and Transportation Officials

1. Standard Specification for Highway Bridges

2. M306: Drainage, Sewer, Utility, and Related Castings

3. M105: Gray Iron Castings

B. ASTM A 48 - Standard Specification for Gray Iron Castings

C. ASTM A 536 – Standard Specification for Ductile Iron Castings

D. ASTM A 615 - Standard Specification for Deformed and Plain Billet-Steel Bars for Concrete Reinforcement

E.. AWS - D 12.1 Welding Reinforcing Steel.

1.04 SUBMITTALS

A. Conform to requirements of Section 01330 - Submittal Procedures.

B. Submit copies of manufacturer's specifications, load tables, dimension diagrams, anchor details, and installation instructions.

C. Submit shop drawings for fabrication and installation of casting assemblies that are not included in Drawings or standard City of Houston details. Include plans, elevations, sections and connection details. Show anchorage and accessory items. Include setting drawings for location and installation of castings and anchorage devices.

PART 2 P R O D U C T S

2.01 CASTINGS

A. All castings shall be made from gray cast iron conforming to the requirements of AASHTO M105 class 35b or ductile iron conforming to the requirements ASTM A536 70-50-05.

B. Castings intended for traffic service shall be clean castings capable of withstanding an application of 40,000 pound proof load as described in Section 5 of AASHTO M306 (includes items such as frames, grates, rings, covers, trench drainage, etc.)

C. Fabricate castings to conform to shapes, dimensions, and with wording or logos shown on Drawings.

D. All castings shall be manufactured in accordance with the requirement of Section 4 of AASHTO M306.

E. Unless otherwise indicated, all gray iron castings shall be provided uncoated.

F. Each individual casting shall include all markings as shown on the specification drawings and shall be identified by the producing foundry showing the following: Name of producing foundry; country of manufacturer preceded by the words "Made in," such as "Made in USA"; material designation, heat identification and cast date (MM/DD/YY), casting lettering as required by the purchaser. If a casting is melted and poured at one foundry and labeled with the name of another organization, manufacturer, or foundry the casting shall include the name of the producing foundry and the organization the casting is produced for. The name of the producing foundry and the organization the product is made for shall have lettering of

equal size, be in close proximity to each other, and be easily identified from the same side of the casting. The casting shall also include any additional markings as required in Section 9 of AASHTO M306 and Section 17 of AASHTO M105.

2.02 TESTING REQUIREMENTS

A. Testing shall be performed in accordance with the following inspection criteria unless otherwise specified in the contract or purchase order. The manufacturer/supplier shall be responsible for carrying out all of the required tests and inspections. All testing shall be conducted in the United States using purchaser approved reliable facilities. The manufacturer/supplier shall maintain complete records of all such tests and inspections. All testing shall be paid for by the manufacturer/supplier.

B. The manufacturer shall report and certify material information obtained from separately cast test bars. If there are more than three test bar failures in a calendar year the manufacturer shall report this to the purchaser and shall discontinue supplying product. In order to resume supplying product, documentation that a new Quality System is in place to ensure material compliance must be submitted to and accepted by the purchaser.

2.03 SPECIAL FRAMES AND COVERS

A. Where indicated on Drawings, provide watertight manhole frames and covers with minimum of four bolts and gasket designed to seal cover to frame. Supply approved watertight manhole covers and frames.

B. Where shown on Drawing, provide manhole frames and covers with 48 inch diameter clear opening, with inner cover for 22 inch diameter clear opening. Provide approved inner cover with pattern shown on Drawings.

C. Where indicated on Drawings provide security enabled covers or grates, to be secured with the addition of Cam locks and lock lugs to inhibit opening and removal of cover or grate without proper authorized tool. Supply approved security feature Frames, Cover or Grates

2.04 FABRICATED RING GRATES

A. Fabricate ring grates from reinforcing steel conforming to ASTM A 615.

B. Conform to welds connecting bars to AWS D 12.1.

2.05 ADJUSTMENT RINGS FOR ASPHALT OVERLAYS

A. Use castings conforming Section 2.01.

B. One piece casting with dimensions to fit frame and cover.

PART 3 EXECUTION

3.01 INSTALLATION

A. Install castings according to approved shop drawings, instructions in related specifications, and applicable directions from manufacturer's printed materials.

B. Set castings accurately at required locations to proper alignment and elevation. Keep castings plumb, level, true, and free of rack. Measure location accurately from established lines and grades. Brace or anchor frames temporarily in form work until permanently set.

C. Fabricate ring grates in accordance with City of Houston standard detail, "Ring Grate for Open End of 18 Inch to 72 Inch Stubs to Ditch". Set in mortar in mouth of pipe bell.

D. Install adjustment rings in existing frames with clean bearing surfaces that are free from rocking.

END OF SECTION

Section 02105

CHEMICAL SAMPLING AND ANALYSIS

PART 1 GENERAL

1.01 SECTION INCLUDES

A. Preparatory work related to site remediation and excavation in a Potentially Petroleum Contaminated Area (PPCA).

B. Sampling and analysis of site material.

1.02 MEASUREMENT AND PAYMENT

A. Unit Prices

1. Preparatory work is paid on a lump sum basis. Item includes hiring environmental consultants, preparing Environmental Health and Safety Plan, preparing Environmental Work Plan, training personnel, and obtaining permits and additional insurance.

2. Underground Utility Construction in PPCA.

a. Underground utility construction and appurtenances in areas identified within PPCA limits is on a linear foot basis, each basis, or lump sum basis, as shown in Document 00410 – Bid Form.

b. Payment includes compensation for labor, equipment, and supervision for mobilization, environmental monitoring and field screening, handling, sampling, and testing of contaminated soil and ground water. Contaminated soil may be Category I or II. Contaminated groundwater will be that encountered during excavation for underground utilities and flowing at a rate not greater than 20 gallons per minute. Included in this pay item is incremental cost for upgraded piping, gaskets, and appurtenant materials.

c. Limits of measurement under this section are noted on Drawings as "Begin PPCA Excavation" and "End PPCA Excavation," and other areas determined by Project Manager during the course of the work.

d. Payment will be made upon receipt of field test reports from approved analytical laboratory.

3. A force account for Extra Work for PPCA Handling will be used to compensate for time and materials required for additional work associated with PPCA when directed by Project Manager to perform such work and for which there is no bid item. Authorization and compensation for this work will be in accordance with Document 00700 - General Conditions.

4. Refer to Section 01270 - Measurement and Payment for unit price procedures.

B. Stipulated Price (Lump Sum). If the Contract is a Stipulated Price Contract, payment for work in this Section is included in the total Stipulated Price.

1.03 REFERENCE STANDARDS

A. ASTM D 5092 - Practice for Design and Installation of Groundwater Monitoring Wells in Aquifers.

B. Code of Federal Regulation (CFR), Title 40, Section 261.24. - Protection of the Environment.

C. CFR, Title 29, Section 1910.120. - Occupational Safety and Health Administration, Department of Labor.

D. CFR, Title 29, Section 1926. - Occupational Safety and Health Administration, Department of Labor.

E. CFR, Title 40, Section 261, Appendix II. - Protection of the Environment.

F. Texas Administrative Code (TAC), Title 30, Chapter 335. - Industrial Solid Waste & Municipal Hazardous Waste.

G. TAC, Title 30, Chapter 334. - Underground and Aboveground Storage Tanks.

H. TAC, Title 30, Chapter 106.533. - Exemptions from Permitting, Subchapter X. Waste Processes and Remediation.

I. U.S. Environmental Protection Agency (EPA), (SW-846) Test Methods for Evaluating Solid Waste, Office of Solid Waste and Emergency Response, Washington, D.C. (P1388-239223, November 1986).

J. Texas Commission on Environmental Quality (TCEQ) Interoffice Memo, dated 4/12/94, by Chris Chandler, RPR Section, PST Division, regarding

Revised Procedures for Classifying and Assigning Waste Codes for Underground and Aboveground Petroleum Storage Tank Wastes (text attached following this section).

1.04 DEFINITIONS

A. Petroleum: Crude oil, natural gas, natural gas liquids, liquefied natural gas, and synthetic gas usable for fuel, as well as distillates of crude oil including gasoline, kerosene, diesel oil, motor oil, waste oil, jet fuels, and fuel oil.

B. Potentially Petroleum Contaminated Area (PPCA): An area within station-to-station locations identified on Drawings where petroleum contamination has been detected in the soil or groundwater. PPCA also includes areas where contamination is suspected or encountered during utility installation outside areas identified on Drawings, and such contamination has been verified by Project Manager.

C. Category I Soil: Soil containing visual or physical evidence of contamination, as described in paragraph 3.01, and that is not Category II Soil.

D. Category II Soil: Soil that contains petroleum contamination in excess of levels identified in paragraph 3.04, and is consistent with a classification as Special Waste-PST as defined by TCEQ in their interoffice memo dated 4/12/94, or soil that contains visible free product or is impacted with non-petroleum compounds detected above Risk Reduction Standard Number 2 levels as defined in Texas Administrative Code, Title 30, Chapter 335.

E. Potentially Contaminated Groundwater: Water recovered in a groundwater control system located in PPCA or groundwater that contains visual or physical evidence of contamination, as described in paragraph 3.01, and such contamination has been verified by Project Manager.

1.05 SUBMITTALS

A. Conform to requirements of Section 01330 - Submittal Procedures.

B. Submit an Environmental Work Plan within 30 days after issuance of Notice to Proceed.

1. The Environmental Work Plan shall be prepared by a Corrective Action Project Manager licensed in Texas, who has completed 40-hours of Health and Safety Training and the required annual refresher training, and in the employment of a registered Corrective Action Specialist firm.

2. The Environmental Work Plan shall include the following items. Compile and arrange in a format that can be reviewed by TCEQ.

   a. Proposed sequence of construction through PPCA;

   b. Procedures for screening soil in PPCA, identifying Category I or II Soil;

   c. Procedures for handling material from PPCA;

   d. Proposed location of stockpile areas;

   e. Proposed reuse of Category I Soil as trench backfill below depths of 30 inches;

   f. Proposed methods for disposal or recycling of Category I or II Soil;

   g. Proposed carriers of Category I or II Soil or potentially contaminated groundwater with verification each is properly licensed;

   h. Proposed recycle/disposal sites for Category I or II Soil or potentially contaminated groundwater with verification that each is properly licensed;

   i. Copy of permit required for discharge of potentially contaminated groundwater in sanitary sewer system, if to be disposed in sanitary sewer;

   j. Name and qualifications of Corrective Action Project Manager and professional environmental consultants for health, environmental, and safety issues regarding operations within PPCA; and,

   k. Proposed analytical laboratory with verification it is accredited by A2LA or other recognized association, or it is a participant in the EPAs Performance Evaluation Program.

3. Do not commence work in PPCA until Environmental Work Plan has been reviewed and accepted by Project Manager.

C. Submit Environmental Health and Safety Plan within 30 days after issuance of Notice to Proceed.

1. The Health and Safety Plan shall be prepared by a Corrective Action Project Manager licensed in Texas, who has completed 40 hours of health and safety training, and required annual refresher training, or a Certified Industrial Hygienist.

2. Include methods and procedures for assuring work, which will be conducted under conditions expected in the field, is safe.

D. As work proceeds, submit field screening, monitoring and analytical laboratory test results on a weekly basis for soil and on a daily basis for groundwater. Summarize test results in tables together with applicable regulatory criteria.

E. Submit copies of correspondence, reports, permits and other documents provided to, or received from, regulatory agencies.

1.06 PERSONNEL REQUIREMENTS

A. Provide trained personnel who have completed minimum health and safety programs specified by the Occupational Safety and Health Administration in 29 CFR 1910.120. Before beginning work at the site, each employee that will work in PPCA is required to have completed 40 hours health and safety training and the required annual refresher training.

PART 2 P R O D U C T S

2.01 MATERIALS

A. Do not use polyvinyl chloride or other plastic material, unless approved by Project Manager.

B. Water Line Pipe Material.

1. Furnish ductile-iron pipe or steel pipe material within station-to-station locations identified as PPCA on Drawings.

2. Provide restrained joints for ductile-iron pipe or welded joints for steel pipe.

3. Provide pipe material conforming to Section 02501 - Ductile-Iron Pipe and Fittings or Section 02502 - Steel Pipe and Fittings.

C. Sanitary Sewer Pipe Material.

1. Furnish ductile-iron pipe, centrifugally cast fiberglass pipe, or equivalent protective materials approved by Project Manager.

2. Provide restrained joints.

3. Provide pipe material conforming to Section 02501 - Ductile-Iron Pipe and Fittings or Section 02504 - Centrifugally Cast Fiberglass Pipe. Use pipe with a minimum pressure rating of 150 psi.

D. Use Viton (FKM) type gaskets, or other material as recommended by the pipe manufacturer, for water lines, sanitary and storm sewer pipe, and appurtenances requiring gaskets.

PART 3 EXECUTION

3.01 POTENTIALLY PETROLEUM CONTAMINATED AREAS

A. Conduct operations in PPCA in accordance with the accepted Environmental Work Plan and the Environmental Health and Safety Plan and to minimize the spread of contamination. In other areas which are either detected or suspected to be potentially petroleum contaminated areas, immediately notify Project Manager and proceed with work in accordance with this Section, unless otherwise directed by Project Manager.

B. Immediately notify Project Manager and TCEQ's Region 12 Field Office whenever Category I or II Soil or potentially contaminated groundwater is encountered.

1. Provide location, depth, type (soil or groundwater), source (if known), and evidence of suspected contamination.

2. Determine if Category I Soil or potentially contaminated groundwater is present by visual or physical evidence of contamination. Visual or physical evidence includes:

a. Petroleum or chemical odor.

b. Indication of levels of contamination by air monitoring devices employed as part of the Environmental Health and Safety Plan.

c. Soil or groundwater discoloration.

d. Material oozing/dripping into excavation.

e. Liquid or oily sheen floating on groundwater.

f. Buried containers or refuse.

g. Field screening head-space results in excess of a 25 ppm reading on a photoionization detector (PID) or flame ionization detector (FID).

C. Install piping and gasket materials and appurtenances in conformance with appropriate section, except as modified in this Section.

D. Construct trench dams within a utility trench at each boundary of PPCA and laterals to minimize potential for contaminant transport within pipe bedding material. A trench dam shall consist of at least 24 inches of cement stabilized sand with 10 percent bentonite clay added, extending from 6 inches below bottom of trench to within 12 inches of limits of topsoil or pavement.

3.02 ENVIRONMENTAL MONITORING

A. An environmental consultant shall monitor conditions in PPCA, as specified in the Environmental Health and Safety Plan. Maintain safe working conditions in accordance with OSHA requirements (29 CFR 1926).

3.03 SCREENING PPCA SOILS

A. An environmental consultant shall perform field screening of soil removed from excavation or tunneling in PPCA.

B. Screening Procedures.

1. Place samples in a sealed plastic bag and place in a warm location for 15 minutes prior to screening.

2. Properly calibrate the PID/FID using a calibration gas. For PID use 100 ppm isobutylene and for FID use 100 ppm methane.

3. Open bag just enough to insert instrument probe and take maximum headspace reading.

4. Screen at least twice per hour while removing soils in open cut areas or shafts.

5. During tunneling, screen once for each pipe length in pipe jacked tunnels or each advance of tunnel shield in primary-lined tunnels. Screen at least once per shift when excavating.

3.04 SAMPLING AND TESTING

A. Frequency.

1. Sample soil in PPCA at a rate of not less than one composite sample for every 20 cubic yards of excavation or volume corresponding to every 50 linear feet of installed underground utility, whichever is more frequent.

2. Sample water from PPCA to be discharged to a sanitary sewer one week prior to initiation of discharge, and at a rate of one grab sample once per day during discharge to sanitary sewer.

B. Analyze soil samples for parameters listed in Table 01160-1, Soil Criteria - Petroleum Only, and in accordance with SW-846. Handle as a Category II Soil if analytical results indicate any one, or more, parameters exceed allowable Maximum Concentration listed in Table 01160-1. If benzene concentration from composite sample is greater than 5 milligrams per kilogram (mg/kg) or lead concentration is greater than 30 mg/kg, perform Toxicity Characteristic Leaching Procedure (TCLP) analysis of appropriate compound for that sample to determine if a more stringent disposal classification is warranted. If contaminants other than petroleum are suspected, immediately notify Project Manager who will determine the list of parameters to be analyzed. If such are encountered, compensation will be made under the Allowance for PPCA Handling. Use a 4-part representative composite sample for analysis of parameters, except when inconsistent with SW-846.

C. Analyze groundwater samples for discharge to sanitary sewers. Analyze samples for BTEX by EPA Method 602, 8020, or 8021; TPH by EPA Method 418.1 or Method TX 1005; and LEL in accordance with EPA Method 1010.

D. Conduct analyses by proposed analytical testing laboratory listed in Environmental Work Plan.

3.05 AIR MONITORING REQUIREMENTS

A. Ensure health and safety of workers at the construction site. Maintain air quality within the construction zone to conform to exposure limits specified in Code of Federal Regulations (CFR) Title 29, Section 1910.120 enforceable by OSHA.

B. Provide adequate shoring and sufficient escape ladders in accordance with applicable trench safety regulatory requirements.

C. In the trench, continuously operate a combustible gas indicator (CGI) with LEL/O_2 meter to monitor vapor and oxygen levels. Properly calibrate CGI and provide an alarm that sounds if greater than or equal to 20 percent Lower Explosive Limit (LEL), less than or equal to 19.5 percent oxygen, or greater than or equal to 25 percent oxygen is reached. Record monitoring data from CGI every 15 minutes to ensure safe work conditions.

D. Take appropriate measures during construction to keep LEL levels below 20 percent in the trench. If vapor concentrations exceed 20 percent of LEL stop construction work, turn off equipment, and have workers immediately vacate the PPCA in an upwind direction.

E. Take readings with PID/FID 50 feet downwind of area during excavation or work in contaminated excavation areas and until one hour after cessation of such work. Take readings within breathing zone at approximately 4 feet above ground level. Record readings, date, time, initials of person taking reading, PID/FID serial number and last calibration date of PID/FID in bound field book.

END OF SECTION

Attachment to Section 02105

PETROLEUM CONTAMINATION

Following, for informational purposes only, is the text of the 4/12/94 Interoffice Memo from Chris Chandler of the Texas Commission on Environmental Quality (TCEQ), RPR Section, PST Division, regarding Revised Procedures for Classifying and Assigning Waste Codes for Underground and Aboveground Petroleum Storage Tank Wastes:

This document is a revision of the waste classification memo dated July 18, 1991 which revised the original March 11, 1991 document. The main difference between the first two documents was the elimination of the distinction between industrial and nonindustrial petroleum substance wastes. This latest version has been revised to reflect changes in the rules and in the agency itself. Significant changes are denoted by underlines. Please discard the previous document.

An appropriate response to any leaking petroleum storage tank incident must always include the proper handling and disposal of all generated wastes. In the majority of cases these wastes include contaminated soils and/or wastewater. Before a disposal destination can be determined for a particular waste, the waste must be classified based on the concentrations of contaminants. The procedures for classification of petroleum contaminated wastes are detailed in the attached Guidance Document for the proper Management of Wastes Associated with Underground and Aboveground Petroleum Storage Tanks. The waste first must be analyzed by a laboratory and then, based upon the results of the analysis, a classification can be assigned to the waste with its corresponding waste code number. The waste code is a predesignated number based upon both the wastes classification and the type of contaminants.

Many disposal facilities are now requiring the generator of any petroleum substance waste to obtain a waste classification from TCEQ that assigns a waste code number to that particular waste before the facility will accept it (even though this is not a regulatory requirement for nonhazardous PST wastes). In order to receive this waste code, the generator first must submit laboratory reports and other information providing the results of analysis for the waste. This information should be attached to a completed copy of TCEQ Form No. 0197. Only after receipt of this documentation should the waste code assignment be made. Waste code numbers should never be issued based upon analytical results unsupported by laboratory documentation.

Laboratory reports should include a description of the analytical procedures utilized, the condition in which the sample was received, and the signature of the laboratory personnel. Also, reports must be accompanied by a description of the sample collection and handling procedures. If the procedures described are not in accordance with EPA-approved and/or TCEQ-accepted procedures, the results should be rejected as invalid.

Soil samples should be collected at the rate of one sample for every fifty cubic yards of material, and each sample should be a composite which is representative of the fifty

cubic yard unit. Water samples from inside storage vessels should be collected from the top of the water column in order to identify the highest contaminant level. Water should be sampled at the rate of one sample per 3000 gallons of water, or a minimum of one sample per container if there is more than one container.

When a waste is categorized as Class II PST or Special Waste-PST, the generator must document the volume, means of transportation, and ultimate destination for the waste. Once all of the proper information has been received by the PST of FO Division in writing, the waste classification and code number can be verbally issued to the generator. The number should be written on the submitted Form No. 0197 in the space marked TCEQ Use Only, and a copy of the form mailed or faxed to the Responsible Party (not the contractor or consultant). Also include the date, the person issuing the code number and the Regional Office number on the form. A copy of the completed form and all submitted information should be sent to the Central Office (or regional office as appropriate).

Regional Field Inspectors as well as PST Division Coordinators should issue waste classifications and code numbers for only Class II PST and Special Wastes-PST on cases they are responsible for coordinating.

Additionally, for all waste classification requests which are not associated with LPST sites (such as for disposal of water used to clean tanks or for disposal of soil/backfill material not associated with a confirmed release), the I&HW Division or the appropriate Regional Office should oversee the waste classification. All hazardous and industrial Class I waste must be manifested in accordance with the Industrial Solid Waste Rules, Chapter 335, Texas Administrative Code. Generators of any hazardous wastes or industrial Class I waste should be referred to the Waste Evaluation Section of the TCEQ Industrial and Hazardous Waste Division at (512) 239-6832.

Following are the waste classification and code numbers for typical nonhazardous wastes generated at leaking underground and aboveground petroleum storage tank sites involving the release of petroleum substances only (i.e., gasoline, diesel, kerosene, jet fuel, etc.).

CONTAMINATED SOILS

Contaminant Level	**Classification**	**Waste Code Number**
If greater than 150 ppm BTEX **OR** 600 ppm TPH	Special Waste PST	PSTW4891
If less than 150 ppm BTEX **AND** 600 ppm TPH	Class II PST Waste	PSTW4892

Note Soils saturated (drippy) with gasoline are likely to be ignitable. Contaminated soils analyzed as ignitable are classified as hazardous waste and therefore can only be transported by a registered hazardous waste hauler and only disposed of at a permitted facility authorized to receive hazardous wastes.

CONTAMINATED WATER

Contaminant Level	**Classification**	**Waste Code Number**
Any concentration of dissolved contamination with no phase-separated product	Class II PST Waste	PSTW1021

As routinely requested in TCEQ's letters, documentation of the handling and disposition of all wastes generated in a LPST response action must be provided to TCEQ. It is essential that we track PST wastes through signed receipts and, when required, manifests to prevent their illegal dumping.

Should you have any questions or comments, please contact me at 512/239-2245 or the Waste Evaluation Section at 512/239-6832.

(Signed) Chris Chandler

END OF ATTACHMENT

Section 02120

OFF-SITE TRANSPORTATION AND DISPOSAL

PART 1 GENERAL

1.01 SECTION INCLUDES

A. Off-site disposal of non-hazardous and hazardous solid, liquid and resinous waste.

1.02 MEASUREMENT AND PAYMENT

A. Unit Prices

1. Payment for transportation and disposal of Class II Soil at approved facility is on a cubic yard basis.

2. Payment for transportation and disposal of Class I Soil at approved facility is on a cubic yard basis.

3. No separate payment will be made for soil reused as backfill material.

4. Payment for transportation and disposal of contaminated groundwater at approved facility is on a per gallon basis.

5. No separate payment for ground water discharged into a sanitary sewer.

6. Refer to Section 01270 - Measurement and Payment for unit price procedures.

B. Stipulated Price (Lump Sum). If the Contract is a Stipulated Price Contract, payment for work in this Section is included in the total Stipulated Price.

1.03 REFERENCES

A. CFR, Title 29, Section 1910.120.- Occupational Safety and Health Administration, Department of Labor.

B. Texas Administrative Code (TAC), Title 30, Chapter 335.- Industrial Solid Waste & Municipal Hazardous Waste.

C. TAC, Title 30, Chapter 334.- Underground and Aboveground Storage Tanks.

D. TAC, Title 30, Chapter 106.533.- Exemptions from Permitting, Subchapter X, Waste Processes and Remediation.

E. U.S. Environmental Protection Agency (EPA), (SW-846) Test Methods for Evaluating Solid Waste, Office of Solid Waste and Emergency Response, Washington, D.C. (P1388-239223, November 1986).

PART 2 P R O D U C T S (Not Used)

PART 3 E X E C U T I O N

3.01 HANDLING CATEGORY I AND II SOILS

A. Do not place Category II Soil back into excavation. Properly dispose of Category II Soil at the facility listed in Environmental Work Plan. Category I Soil consistent with classification as Class II PST Waste as defined by Texas Commission on Environmental Quality (TCEQ) in their interoffice memo dated 4/12/94, and not Category II Soil (as demonstrated through laboratory testing) can be reused as backfill material, provided;

1. Soil is reused in the same area from which it originated at depths greater than 30 inches below top of pavement, finished grade or ditch flowline, whichever is lower.

2. Soil has suitable engineering properties for backfill material as specified in Section 02320 - Utility Backfill Material.

3. Does not have indications of impact by contaminants other than petroleum.

B. Do not spread Category I or II Soil on ground surface.

C. Place Category I or II Soil in covered roll-off box with a minimum 20-mil plastic liner or in a stockpile at temporary storage area, pending receipt of analytical results and receipt of authorization from TCEQ and the disposal site for final disposal; or, in trucks for transport directly to the disposal facility.

1. Do not commingle Category I or II Soil from different locations or with different sources.

2. Temporary storage area to meet following criteria:

a. Within 2 miles of project site, to allow access by City personnel, unless otherwise approved by Project Manager.

b. Outside the 100-year floodplain.

c. Outside of, and not adjacent to, an area known or suspected to be a wetland.

d. Acceptable to Project Manager.

3. Secure using temporary fencing or other means of controlling access.

4. Place stockpiled soils on an impervious membrane. Surround with a berm to prevent migration of soils or moisture either into or out of the stockpile, other than evaporation.

5. Protect and cover the stockpile with minimum 20-mil plastic or other approved waterproof membrane covering. Replace damaged covers.

6. Do not place soil over monitoring wells or piezometers, utility line manholes, or any other potential route for water to migrate to subsurface.

7. Handle runoff from the temporary storage area in accordance with paragraph 3.06, Handling Water.

8. Do not stockpile soil for greater than 30 days.

9. Remove remaining material, including excavated soil from construction site, from temporary storage area prior to completion of Work.

D. Remove, handle, transport, stockpile, and dispose of Category II Soil under direction of Corrective Action Project Manager. Dispose waste classified (i.e., meets characteristics or other definitions of) a hazardous waste consistent with Resource Conservation and Recovery Act (RCRA) and 30 TAC Chapter 335.

E. Transport Category I or II Soil in accordance with Department of Transportation (DOT) and TCEQ rules and regulations.

F. Dispose Category I Soil, not reused as backfill, under direction of Corrective Action Project Manager, at a properly licensed facility with prior approval of Project Manager.

G. Obtain signed manifests from the receiving facility and provide originals to Project Manager.

H. Decontaminate large equipment to prevent cross-contamination with clean material. Steam clean or pressure wash dump trucks, bulldozers, backhoes, and other large equipment prior to use in uncontaminated areas after being used in PPCA.

3.02 HANDLING WATER

A. Prior to discharging petroleum contaminated groundwater, obtain an Industrial Wastewater Discharge Permit (no cost) from the City for disposal directly to a sanitary sewer which discharges to a City-owned wastewater treatment plant.

B. Procedures.

1. Provide equipment sized to handle flows anticipated by dewatering operations.

2. Include commercially available oil/water separator unit as part of the treatment system for dewatering operation discharging to sanitary sewer.

3. Do not exceed limits listed in Table 01160-2, Potentially Contaminated Groundwater Discharge Limits for groundwater discharged to the sanitary sewer. Provide additional treatment systems as needed prior to discharge to sanitary sewers where groundwater contamination levels exceed those noted in Table 01160-2. Approval by Project Manager shall be obtained for proposed treatment system prior to initiation of treatment and discharge.

4. Comply with all applicable requirements of 30 TAC, Chapter 106.533, including submitting a PI-7 form to the TCEQ for a standard exemption of oil/water separator unit, and any additional treatment systems. Submit copy of PI-7 form to Project Manager.

5. Do not discharge treated water into sanitary sewer if water level is within one foot of the top of sanitary sewer manhole or would cause an overflow situation.

6. Recover free product collected in treatment equipment. Recycle for beneficial reuse or dispose of recovered contaminants in a manner acceptable to Project Manager and TCEQ.

7. Transport potentially contaminated groundwater and free product in accordance with DOT and TCEQ rules and regulations for flammable products. Use DOT-licensed carrier for transport.

8. Obtain signed manifests for potentially contaminated groundwater and free product from the receiving facility and provide originals to Project Manager.

9. Furnish laboratory reports to Project Manager within one week of sample date.

C. Install and operate groundwater control systems, as described in Section 01578 - Control of Groundwater and Surface Water. Design and operate groundwater control systems so water from PPCA is handled in a system separated and isolated from groundwater control systems outside PPCA.

D. Handle, test, treat, and discharge potentially contaminated groundwater to the sanitary sewer in accordance with City of Houston, Industrial Wastewater Discharge Permit requirements, or have water evacuated and hauled for off-site treatment and disposal at a TCEQ-permitted facility. Perform discharge under direction of Corrective Action Project Manager.

3.03 AIR MONITORING REQUIREMENTS

A. Ensure health and safety of workers at the construction site. Maintain air quality within the construction zone to conform to exposure limits specified in Code of Federal Regulations (CFR) Title 29, Section 1910.120 enforceable by OSHA.

B. Provide adequate shoring and sufficient escape ladders in accordance with applicable trench safety regulatory requirements.

C. In the trench, continuously operate a combustible gas indicator (CGI) with LEL/O_2 meter to monitor vapor and oxygen levels. Properly calibrate CGI and provide an alarm that sounds if greater than or equal to 20 percent Lower Explosive Limit (LEL), less than or equal to 19.5 percent oxygen, or greater than or equal to 25 percent oxygen is reached. Record monitoring data from CGI every 15 minutes to ensure safe work conditions.

D. Take appropriate measures during construction to keep LEL levels below 20 percent in the trench. If vapor concentrations exceed 20 percent of LEL stop construction work, turn off equipment, and have workers immediately vacate the PPCA in an upwind direction.

E. Take readings with PID/FID 50 feet downwind of area during excavation or work in contaminated excavation areas and until one hour after cessation of such work. Take readings within breathing zone at approximately 4 feet above ground level. Record readings, date, time, initials of person taking reading, PID/FID serial number and last calibration date of PID/FID in bound field book.

3.04 DISPOSAL OF MATERIAL

A. Non-categorized Material. Dispose of excess or unsuitable excavated materials, not Category I or II Soil, off-site in accordance with Section 01576 - Waste Material Disposal.

B. Category I or II Soil. Dispose of excess or unsuitable excavated materials off-site at a state registered Treatment, Storage, or Disposal (TSD) facility. Obtain signed manifests from the receiving facility and provide originals to Project Manager.

TABLE 01160-1
SOIL CRITERIA - PETROLEUM ONLY

Contaminant	Maximum[a] Concentration (mg/kg)	Method
TPH	1500	EPA 418.1/TX 1005
Total BTEX[b]	150	EPA 8020/8021
Total Lead[c]	250	EPA 6000/6010/7000

Notes: [a] If any parameters exceed the maximum concentrations, then the soil shall be considered Category II Soil and a Special Waste-PST as defined by the TCEQ in their interoffice memo dated 4/12/94.
[b] If benzene is greater than 5.0 mg/kg then analyze TCLP benzene which should be <0.3 mg/l.
[c] If total lead is greater than 30 mg/kg then analyze TCLP lead which should be <1.5 mg/l.

Definitions: TCLP - toxicity characteristic leachate procedure (40 CFR 261, Appendix II)
BTEX - benzene, toluene, ethyl benzene, and total xylenes
TPH - total petroleum hydrocarbons
mg/kg - milligrams per kilogram
mg/l - milligrams per liter

TABLE 01160-2
POTENTIALLY CONTAMINATED GROUNDWATER DISCHARGE LIMITS

Parameter	Discharge to Sanitary Sewer	
	Limit	Method
TPH (mg/l)	30.0	EPA 418.1/TX 1005
Total BTEX (mg/l)	1.0	EPA 602/8020/8021
Lower Explosive Limit (%)	10	EPA 1010

Notes: See definitions above.

END OF SECTION

Section 02221S

REMOVING EXISTING PAVEMENTS, STRUCTURES, WOOD, AND DEMOLITION DEBRIS

The following supplements modify Specification Section 02221 – Removing Existing Pavements, Structures, Wood, and Demolition Debris. Where a portion of the Specification or Detail is modified or deleted by this Supplementary Specification, the unaltered portions of the Specification shall remain in effect.

1.03 REGULATORY REQUIREMENTS: Add the following Paragraph C:

C. For removal of asbestos containing materials, or material that could potentially contain asbestos, comply with applicable provisions of OSHA 29 CFR 1926.1101 – Asbestos, OSHA 29 CFR 1926.32 – General Safety and Health Provisions, and EPA 40 CFR 61 Subpart M – National Emission Standard for Asbestos.

3.01 PREPARATION: Add the following Paragraph C:

C. For removal of asbestos containing materials, or materials that could potentially contain asbestos, comply with the following:

1. Crew members must be trained in accordance with OSHA 29 CFR 1926.1101 – Asbestos.
2. Conduct negative exposure assessment to demonstrate asbestos exposure below permissible exposure limit (PEL) in accordance with OSHA 29 CFR 1926.1101 – Asbestos and EPA 40 CFR 763 – Asbestos.
3. If negative exposure assessment not conducted, or if results are above PEL, provide respiratory protection in accordance with Paragraph 3.02 of this Section.

3.02 PROTECTION: Add the following Paragraph B:

B. When required, provide respiratory protection in accordance with OSHA 29 CFR 1910.134 – Respiratory Protection, and National Institute of Occupational Safety and Health (NIOSH).

3.03 REMOVALS: Add the following Paragraph G:

G. Labeling of Asbestos Cement (AC) Pipe:

1. Label leak-tight container with warning statement of hazardous asbestos content in accordance with OSHA 29 CFR 1926.1101 and as noted below.
2. Label waste material with following warning:

DANGER
CONTAINS ASBESTOS FIBERS
MAY CAUSE CANCER
CAUSES DAMAGE TO LUNGS
DO NOT BREATHE DUST
AVOID CREATING DUST

3. Neatly print labels in letters of sufficient size and contrast so label is easily visible and legible.

3.05 DISPOSAL: Add the following Paragraph C:

C. For asbestos-containing materials:

1. Comply with 40 CFR Part 61 and 30 TAC Sections 330.137(b) for Industrial Class 1 waste.
2. Inspect load to ensure correct packaging and labeling.
3. Line vehicles with two layers of 6-mil polyethylene sheeting.
4. Remove asbestos-containing waste from site daily.

END OF SUPPLEMENT

Approved by:

Mark L. Loethen, P.E., CFM, PTOE
City Engineer
Department of Public Works & Engineering

11/17/2012
Date

Section 02221

REMOVING EXISTING PAVEMENTS, STRUCTURES, WOOD, AND DEMOLITION DEBRIS

PART 1 GENERAL

1.01 SECTION INCLUDES

A. Removing concrete paving, asphaltic concrete pavement, brick pavement and base courses.

B. Removing concrete curbs, concrete curbs and gutters, sidewalks and driveways.

C. Removing pipe culverts, sewers, and sewer leads.

D. Removing waterlines and water services lines including asbestos cement pipe per OSHA guidelines.

E. Removing existing inlets and manholes.

F. Removing and disposing of pre-stressed concrete beams and drill shafts.

G. Removing miscellaneous structures of concrete or masonry.

H. Removing existing bridge.

I. Removing existing wood and demolition debris.

1.02 MEASUREMENT AND PAYMENT

A. Unit Prices.

1. Payment for removing and disposing of asphaltic surfacing with or without base, regardless of thickness encountered, is on square yard basis measured between lips of gutters.

2. Payment for removing and disposing of reinforced concrete pavement, with or without asphalt overlay, regardless of its thickness, is on square yard basis measured from back-to-back of curbs. Payment includes concrete pavement, esplanade curbs, curbs and gutters, and paving headers.

3. Payment for removing and disposing of cement stabilized shell base course, with or without asphaltic surfacing, is on square yard basis.

4. Payment for removing and disposing of concrete sidewalks and driveways is on square yard basis.

5. Payment for removing asphaltic pavement surface by milling shall be in accordance with Section 2960.

6. Payment for removing and disposing of miscellaneous concrete and masonry is on cubic yard basis of structure in place.

7. Payment for removing and disposing of pipe culverts, sewers, and sewer leads, is on linear foot basis for each diameter and each material type of pipe removed.

8. Payment for removing and disposing of waterlines and water service lines including asbestos cement pipe is on linear foot basis for each diameter pipe and each material type of pipe removed.

9. Payment for removing and disposing of existing inlets is on unit price basis for each inlet removed.

10. Payment for removing and disposing of prestressed concrete piles and drill shafts is on linear foot basis.

11. Payment for removing and disposing of existing bridge, including piles and abutments to minimum of 4 feet below ground level, is on a lump sum basis.

12. Payment for removing and disposing of existing manholes is on unit price basis for each manhole removed.

13. Payment for removing and disposing of miscellaneous wood and demolition debris is on cubic yard basis.

14. No payment for saw cutting of pavement, curbs, or curbs and gutters will be made under this section. Include cost of such work in unit prices for items listed in bid form requiring saw cutting.

15. No payment will be made for work outside maximum payment limits indicated on Drawings, or for pavements or structures removed for Contractor's convenience.

    a. For utility installations: Match actual pavement replaced but no greater than maximum pavement replacement limits shown on Drawings. Limits of measurement will be as shown on Street Cut Pavement Replacement Rules.

16. Refer to Section 01270 - Measurement and Payment for unit price procedures

B. Stipulated Price (Lump Sum). If Contract is Stipulated Price Contract, payment for work in this Section is included in total Stipulated Price.1.03 REGULATORY REQUIREMENTS

A. Conform to applicable codes for disposal of debris.

B. Coordinate removal work with utility companies.

PART 2 P R O D U C T S - Not Used
PART 3 E X E C U T I O N

3.01 PREPARATION

A. Obtain advance approval from Project Manager for dimensions and limits of removal work.

B. Identify known utilities below grade. Stake and flag locations.

3.02 PROTECTION

A. Protect following from damage or displacement:

1. Adjacent public and private property.

2. Trees, plants, and other landscape features designated to remain.

3. Utilities designated to remain.

4. Pavement and utility structures designated to remain.

5. Bench marks, monuments, and existing structures designated to remain.

3.03 REMOVALS

A. Remove pavements and structures by methods that will not damage underground utilities. Do not use drop hammer near existing underground utilities.

B. Minimize amount of earth loaded during removal operations.

C. Where existing pavement is to remain, make straight saw cuts in existing pavement to provide clean breaks prior to removal. Do not break concrete pavement or base with drop hammer unless concrete or base has been saw cut to minimum depth of 2 inches.

D. When street and driveway saw cut location is greater than one-half of pavement lane width, remove pavement for full lane width or to nearest longitudinal joint as directed by Project Manager.

E. Remove sidewalks and curbs to nearest existing dummy, expansion, or construction joint.

F. Where existing end of pipe culvert or end of sewer is to remain, install 8-inch-thick masonry plug in pipe end prior to backfill in accordance with requirements of Section 02316 - Excavation and Backfill for Structures.

3.04 BACKFILL

A. Backfill of removal areas shall be in accordance with requirements of Section 02316 - Excavation and Backfill for Structures.

3.05 DISPOSAL

A. Inlet frames, grates, and plates; and manhole frames and covers, may remain City property. Disposal shall be in accordance with requirements of Section 01576 - Waste Material Disposal.

B. Remove from site, debris resulting from work under this section in accordance with requirements of Section 01576 - Waste Material Disposal.

END OF SECTION

Section 02315S

ROADWAY EXCAVATION

The following supplement modifies Specification Section 02315 – Roadway Excavation. Where a portion of the Specification or Detail is modified or deleted by this Supplementary Specification, the unaltered portions of the Specification shall remain in effect

PART 1 GENERAL

1.01 SECTION INCLUDES: Add paragraph 1.01.C and 1.01.D as follows:

C. Excavation and compaction of materials for detention basins.

1.02 MEASUREMENT AND PAYMENT: Add paragraph 1.02.A.7 as follows:

A. Unit Prices.

7. Excavation and compaction detention basins to original lines and grades and disposal of all excess silt, earthen materials and debris, in accordance with Section 01576 – Waste Material Disposal, is in cubic yard basis with final quantity and payment to be verified by truck ticket.

PART 3 EXECUTION

3.09 REGRADING DITCHES: Add paragraph 3.09A as follows:

A. Work shall consist of excavating ditches, rectifying and/or altering ditches, placement of erosion control blanket, grading side slopes to line and grade as show on Drawings or as directed by Project Manager, removal and proper utilization or disposal of excavated materials to ensure proper drainage of project area.

END OF SUPPLEMENT

Approved by:

Dane P. Schneider, P.E.
Interim Managing Engineer
Storm Water Engineering Section
Engineering and Construction Division

01-17-2013
Date

Section 02315

ROADWAY EXCAVATION

PART 1 GENERAL

1.01 SECTION INCLUDES

A. Excavation and compaction of materials for roadways.

B. Excavation and compaction of materials for roadside ditches.

1.02 MEASUREMENT AND PAYMENT

A. Unit Prices.

1. Payment for roadway excavation, with or without subgrade, is on cubic yard basis. Unless specified otherwise under the borrow (off-site) material or embankment fill work item, measurement for payment shall be based on the cut quantity shown on the drawing.

2. No payment will be made for material excavated under the following conditions:

   a. More than 2 feet outside of vertical planes behind back of curbs

   b. For portion within limits of trench for utilities 24-inch and greater constructed by open-cut methods

   c. As indicated otherwise on Drawings.

3. Measurement for the bid item "Regrade Ditches" is on a linear foot basis. No separate payment will be made for reshaping and regrading roadway ditch shoulder slope and side slope adjacent to installed temporary pavement upon removal of temporary pavement.

4. If specified, off-site borrow material including placement and compaction will be paid by final in-place quantity on cubic yard basis.

5. If specified and shown on the drawing, embankment fill including placement and compaction will be paid by final in-place quantity on cubic yard basis.

6. Refer to Section 01270 - Measurement and Payment for unit price procedures.

B. Stipulated Price (Lump Sum). If Contract is Stipulated Price Contract, payment for work in this Section is included in total Stipulated Price.

1.03 REFERENCES

A. ASTM D 698 - Standard Test Method for Laboratory Compaction Characteristics of Soil Using Standard Effort (12.44 ft-lbf/ft^3).

B. ASTM D 2216 - Standard Test Method for Laboratory Determination of Water (Moisture) Content of Soil and Rock by Mass.

C. ASTM D 2922 - Standard Test Methods for Density of Soil and Soil-Aggregate in Place by Nuclear Methods (Shallow Depth).D. ASTM D 3017 - Standard Test Method for Water content of Soil and Rock in Place by Nuclear Methods (Shallow Depth).

E. ASTM D 4318 - Standard Test Methods for Liquid Limit, Plastic Limit, and Plasticity Index of Soils.

PART 2 PRODUCTS

2.01 MATERIALS

A. Provide topsoil conforming to requirements of Section 02911 - Topsoil.

B. Provide backfill which is excavated material, graded free of roots, lumps greater than 6 inches, rocks larger than 3 inches, organic material, and debris.

C. Provide structural backfill which is select material meeting following requirements:

1. Plasticity index: not less than 12 nor more than 20.

2. Maximum liquid limit: 45

PART 3 EXECUTION

3.01 PREPARATION

A. Identify required lines, levels, and datum. Coordinate with Section 01725 - Field Surveying.

B. Identify and flag surface and aerial utilities.

C. Notify utility companies to remove or relocate utilities.

D. Identify, stake, and flag known utility locations below grade. Make temporary or permanent relocation of underground pipes, ducts, or utilities where indicated on Drawings.

E. Upon discovery of unknown or badly deteriorated utilities, or concealed conditions, discontinue work. Notify Project Manager and obtain instructions before proceeding in such areas.

F. Obtain approval of top soil quality before excavating and stockpiling.

3.02 PROTECTION

A. Protect following from damage or displacement:

1. Trees, shrubs, lawns, existing structures, and other features outside of grading limits.

2. Utilities either above or below grade, which are to remain.

3.03 TOPSOIL REMOVAL

A. Strip off topsoil from area to be excavated to minimum depth of 6 inches, unless indicated otherwise on Drawings.

B. Stockpile topsoil in designated location for reuse. Stockpile topsoil to depth not exceeding 8 feet. Cover to protect from erosion.

3.04 SOIL EXCAVATION

A. Excavate to lines and grades shown on Drawings.

B. Remove unsuitable material not meeting specifications. Backfill with embankment materials and compact to requirements of Section 02330 - Embankment.

C. Record location and plug and fill inactive water and oil wells. Conform to Texas Department of Health, Texas Natural Resource Conservation Commission, and Texas Railroad Commission requirements. Notify Project Manager prior to plugging wells.

D. At intersections, grade back at minimum slope of one inch per foot. Produce smooth riding junction with intersecting street. Maintain proper drainage.

E. When area is inadvertently over excavated, fill area in accordance with requirements of Section 02330 - Embankment at no additional cost to City.

F. Remove material not qualified for use and excess soil not being reused from site in accordance with requirements of Section 01576 - Waste Material Disposal.

3.05 COMPACTION

A. Maintain optimum moisture content of subgrade to attain required density.

B. Compact to following minimum densities at moisture content of optimum to 3 percent above optimum as determined by ASTM D 698, unless otherwise indicated on Drawings:

1. Areas under future paving and shoulders: Minimum density of 95 percent of maximum dry density.

2. Other areas: Minimum density of 90 percent of maximum dry density.

3.06 TOLERANCES

A. Top of Compacted Surface: Plus or minus 1/2 inch in cross section, or in 16-foot length.

3.07 FIELD QUALITY CONTROL

A. Testing will be performed under provisions of Section 01454 - Testing Laboratory Services.

B. Test and analysis of soil materials will be performed in accordance with ASTM D 4318, ASTM D 2216, and ASTM D 698.

C. Compaction testing will be performed in accordance with ASTM D 698 or ASTM D 2922 and ASTM D 3017.

D. A minimum of three tests will be taken for each 1000 linear feet per lane of roadway.

E. When tests indicate work does not meet specified compaction requirements, recondition, recompact, and retest at no additional cost to City.

3.08 PROTECTION

A. Prevent erosion at all times. Maintain ditches and cut temporary swales to allow natural drainage in order to avoid damage to roadway. Do not allow water to pond.

B. Distribute construction traffic evenly over compacted areas, where practical, to aid in obtaining uniform compaction. Protect exposed areas having high moisture content from wheel loads that cause rutting.

C. Maintain excavation and embankment areas until start of subsequent work. Repair and recompact slides, washouts, settlements, or areas with loss of density.

END OF SECTION

Section 02511S

WATER LINES

The following supplements modify Section 02511 - Water Lines Standard Specification. Where a portion of the Specification is modified or deleted by this Supplementary Specification, the unaltered portions of the Specification shall remain in effect.

1.02 MEASUREMENT AND PAYMENT: replace Paragraph 1.02 A. 1 with the following:

1. Payment for water lines installed by open- cut or trenchless construction or aerial crossing, with or without restrained joints, with or without casing, within limits of pipe offset section or within limits of Potentially Petroleum Contaminated Area (PPCA) or within limits of Fault Hazard Zone (FHZ) is on a linear foot basis for each size of pipe installed. Payment will include welded and restrained joints, for large diameter water lines. Separate pay items are used for each type of installation:

    a. Mains: Mains Measure along axis of pipe and include fittings and valves.

    b. Branch Pipe: Measure from axis of water line to end of branch.

Insert the following paragraph:

2.05 FLEXIBLE EXPANSION JOINTS:

A. Install Flexible Expansion Joints at locations indicated on drawings, within limits of Fault Hazard Zone, in accordance with the manufacturer's recommendations.

3.01 PREPARATION: Delete Paragraph I and replace with the following:

I. If asbestos-cement (A.C.) pipe is encountered, follow safety practices outlined in OSHA 29 CFR 1926.1101 – Asbestos. Refer to Section 02221 – Removing Existing Pavements, Structures, Wood, and Demolition Debris for removing and disposing of A.C. pipe.

END OF SUPPLEMENT

Approved by:

James T. Lincoln, P.E. Date 10/21/13
City Engineer
Department of Public Works & Engineering

Section 02511

WATER LINES

PART 1 GENERAL

1.01 SECTION INCLUDES

A. Installation of water lines.

B. Specifications identify requirements for both small diameter water lines and large diameter water lines. When specifications for large diameter water lines differ from those for small diameter water lines, large diameter specifications will govern for large diameter pipe.

1.02 MEASUREMENT AND PAYMENT

A. Unit Prices.

1. Payment for water lines installed by open-cut, trenchless construction with or without casing, aerial crossing, and pipe offset section or within limits of Potentially Petroleum Contaminated Area (PPCA) is on linear foot basis for each size of pipe installed. Separate pay items are used for each type of installation:

   a. Mains: Measure along axis of pipe and include fittings and valves.

   b. Branch Pipe: Measure from axis of water line to end of branch.

2. Payment for interconnection is on lump sum basis for each interconnection identified on Drawings. Payment will include tapping sleeve and valves piping, connections and other related work necessary for construction as shown on Drawings or specified herein.

3. Payment for removal of existing internal elliptical or dished head plug is on unit price basis for each internal elliptical or dished head plug removed. Payment will include deletion of plug, drainage or dewatering of water lines, repair of damaged linings, rechlorination and items incidental to operation.

4. Payment for plug and clamp is on a unit price basis for each size of pipe.

5. Payment for drainline connection with service manhole is on unit price basis for each drainline shown on drawings. Payment includes valve, access manhole and connection.

6. Payment for cylindrical corrosion barriers is on a unit price basis for each pipe fitting installed with one or more barriers.

7. When directed by Project Manager to install extra fittings as required to avoid unforeseen obstacles, payment will be based on the following:

   a. Each extra fitting requested by Project Manager and delivered to jobsite will be paid according to unit price for "Extra Fittings in Place."

   b. Payment will include and be full compensation for items necessary for installation and operation of water line.

8. Payment for pipe support structure, including pipe guards will be paid on a lump sum basis for each aerial crossings. Payment includes related work performed in accordance with related Sections.

9. No separate payment will be made for pavement removal and replacement of surface improvement necessary for augering, tunneling, or other trenchless methods of installation, unless shown on drawings.

10. Refer to Section 01270 - Measurement and Payment for unit price procedures.

B. Stipulated Price (Lump Sum). If Contract is Stipulated Price Contract, payment for work in this Section is included in total Stipulated Price.

1.03 REFERENCES

A. ANSI A 21.11/AWWA C111 - Standard for Rubber-Gasket Joints for Ductile - Iron Pressure Pipe and Fittings.

B. ANSI/NSF Standard 61 - Drinking Water System -Health Components.

C. ASTM A 36 - Standard Specification for Carbon Structural Steel

D. ASTM A 536 - Standard Specification for Ductile Iron Castings

E. ASTM A 126 - Standard Specification for Gray Iron Castings for Valves, Flanges, and Pipe Fittings.

F. ASTM B 21 - Standard Specification for Naval Brass Rod, Bar, and Shapes.

G. ASTM B 98 - Standard Specification for Copper-Silicon Alloy Rod, Bar, and Shapes.

H. ASTM B 301 - Standard Specification for Free-Cutting Copper Rod and Bar.

I. ASTM B 584 - Standard Specification for Copper Alloy Sand Casting for General Application.

J. ASTM E 165 - Standard Test Method for Liquid Penetrant Examination

K. ASTM E 709 - Standard Guide for Magnetic Particle Examination

L. ASTM F 1674 - Standard Test Method for Joint Restraint Products for Use with PVC Pipe.

M. AWWA C 206 - Standard for Field Welding of Steel Water Pipe.

N. AWWA C 207 - Standard for Steel Pipe Flanges for Waterworks Service - Sizes 4 Inches through 144 Inches.

1.04 SUBMITTALS

A. Conform to requirements of Section 01330 - Submittal Procedures.

B. Conform to submittal requirements of applicable Section for type of pipe used.

C. Photographs: Submit photographs conforming to requirements of Section 01321 - Construction Photographs prior to commencement of construction.

D. Submit Lone Star notification transmittal number prior to beginning excavation.

E. Submit, a minimum of 15 days before beginning pipe laying operations, layout drawing identifying proposed sections for disinfecting, hydrostatic testing and site restoration for entire project for review and approval. Layout drawing to identify sequence of sections for:

1. Disinfection according to the following criteria:

   a. 2,000 linear feet for small diameter pipelines (20-inches in diameters or smaller)
   b. 4,000 linear feet for large diameter pipelines (24-inches in diameters or larger)

2. Hydrostatic testing and transfer of services; to immediately follow sequence of disinfected section.

3. Site restoration; not to exceed limits specified; Sequence in order of disturbance.

F. For pipe with bell-and-spigot ends with rubber gasket, submit complete joint details with dimensions and tolerances and performance history indicating the proposed joint has performed satisfactorily under similar conditions.

PART 2 P R O D U C T S

2.01 PIPE MATERIALS

A. Install pipe materials which conform to following:

1. Section 02501 - Ductile Iron Pipe and Fittings.

2. Section 02502 - Steel Pipe and Fittings. Water line piping within plant site and aerial crossings to be welded joint steel pipe with flange or approved restraint joint connections, unless otherwise shown on Drawings.

3. Section 02506 - Polyvinyl Chloride Pipe.

4. Section 02507 - Prestressed Concrete Cylinder Pipe.

5. Section 02518 - Steel Pipe and Fittings for Large Diameter Water Lines.

6. Section 02613 - Bar-Wrapped Steel Cylinder Pipe.

B. Conform to American National Standards Institute/National Sanitation Foundation (ANSI/NSF) Standard 61 and have certified by an organization accredited by ANSI.

C. Type of pipe materials used is Contractor's option unless specifically identified on Drawings.

D. Provide minimum of 3/8 inch inside joint recess between ends of pipe in straight pipe sections.

E. Pipe Manufacturer: Performance history shall be minimum 5 years of successful field installations with proposed pipe diameter and proposed type of pipe joint. In absence of 5-year performance history for proposed pipe diameter, the following items shall be required for review by Project Manager prior to approval:

a. Quality Assurance Program: Submit certified quality assurance program addressing all aspects of pipe manufacturing process, including coating and lining applications. Certified program shall be ISO 9001; 2000 or other equivalent industry standard nationally recognized program.

b. Hydrostatic Joint Test: Perform hydrostatic test of proposed joint at proposed pipe diameter in presence of Project Manager. Test duration shall be minimum 8 hours at 150 psi with no leakage, with pipe cylinder deflected at joint to 3% of nominal diameter, with maximum allowable joint engagement deflection.

c. Provide minimum four (4) weeks notice to Project Manager for hydrostatic joint test. Submit test procedures to Project Manager for approval.

Project Manager's decision as to acceptability of joint is final.

2.02 WELDED JOINT PROTECTION FITTING FOR SMALL DIAMETER STEEL PIPE

A. Cylindrical Corrosion Barrier: Provide approved cylindrical corrosion barrier.

B. O-rings: Conform to National Sanitary Foundation requirements.

2.03 RESTRAINED JOINTS

A. Ductile-Iron Pipe: See Section 02501 - Ductile Iron Pipe and Fittings.

B. PVC Pipe: See Section 02506 - Polyvinyl Chloride Pipe. Perform hydrostatic testing in accordance with ASTM F 1674.

C. Prestressed Concrete Cylinder Pipe, Bar-Wrapped Pipe and Steel Pipe: Welded joints (see Paragraph 3.06 D).

D. Restrained Joints where required on DIP and PVC pipe is allowed with the following requirement as an alternative to the pipe with an integral restrained joint systems:

1. Restraint devices: Manufacture of high strength ductile iron, ASTM A 536 up to 24 inches, and ASTM A 36 for sizes greater than 30 inches. Working pressure rating twice that of design test pressure.

2. Bolts and connecting hardware: High strength low alloy material in accordance with ANSI A21.11/AWWA C111.

E. Ductile Iron Pipe in auger holes must be provided with integral restrained joints at both the bell and the spigot.

2.04 COUPLINGS AND APPURTENANCES FOR LARGE DIAMETER WATERLINE

A. Flexible (Dresser-type) Couplings.

1. Install where shown on Drawings or where allowed by Project Manager for Contractor's convenience. Use galvanized flexible couplings when installed on galvanized pipe which is cement lined, or when underground. Provide gaskets manufactured from Neoprene or Buna-N.

2. For steel pipe; provide approved sleeve-type flexible couplings. Thickness of middle ring equal to or greater than thickness of pipe wall.

3. Provide approved flanged adapter couplings for steel pipe

4. Use Type 316 stainless steel bolts, nuts and washers where flexible couplings are installed underground. Coat entire coupling with 20-mil of approved coal tar coating.

B. Flap Valves: Provide approved flap valves on discharge of manhole drainline as shown on Drawings.

1. Body and Flap: ASTM A 126-B cast iron.

2. Seats: ASTM B 21-CA482 or ASTM B 301-CA145 bronze.

3. Resilient Seat:

4. Hinge Arms: ASTM B 584-CA865 high tensile bronze.

5. Hinge pins: ASTM B 98-CA655 silicon bronze.

PART 3 EXECUTION

3.01 PREPARATION

A. Conform to applicable installation specifications for types of pipe used.

B. Employ workmen who are skilled and experienced in laying pipe of type and joint configuration being furnished. Provide watertight pipe and pipe joints.

C. Lay pipe to lines and grades shown on Drawings.

D. Confirm that nine feet minimum separation from gravity sanitary sewers and manholes or separation of four feet minimum from force mains as specified in this Section in all directions unless special design is provided on Drawings.

E. Where above clearances cannot be attained, and special design has not been provided on Drawings, obtain direction from Project Manager before proceeding with construction.

F. Inform Project Manager if unmetered sprinkler or fire line connections exist which are not shown on Drawings. Make transfer only after approval by Project Manager.

G. For projects involving multiple subdivisions or locations, limit water line installation to maximum of two project site locations. Maximizing 2 pipe installation crews shall be permitted, unless otherwise approved by Project Manager.

H. City of Houston Utility Operations Division will handle, at no cost to Contractor, operations involving opening and closing valves for wet connections and for chlorination. Contractor is responsible for handling necessary installations and removal of chlorination and testing taps and risers.

I. If asbestos-cement (A.C.) pipe is encountered, follow safety practices outlined in American Water Works Association's publication, "Work Practices for A/C Pipe". Strictly adhere to "recommended practices" contained in this publication and make them "mandatory practices" for this Project.

J. For pipe diameters 36 inches and greater, clearly mark each section of pipe and fitting with unique designation on inside of pipe along with pressure class. Locate unique identifying mark minimum of five feet away from either end of each section of pipe. Provide one unique identifying mark in middle of each fitting. Place markings at consistent locations. Use permanent black paint and minimum letter height of 4 inches to mark designations.

K. Contractor is responsible for assuring chosen manufacturer fulfills requirements for extra fittings and, therefore, is responsible for costs due to downtime if requirements are not met.

L. Do not remove plugs or clamps during months of peak water demands; June, July and August, unless otherwise approved by Project Manager.

3.02 HANDLING, CLEANING AND INSPECTION

A. Handling:

1. Place pipe along project site where storm water or other water will not enter or pass through pipe.

2. Load, transport, unload, and otherwise handle pipe and fittings to prevent damage of any kind. Handle and transport pipe with equipment designed, constructed and arranged to prevent damage to pipe, lining and coating. Do not permit bare chains, hooks, metal bars, or narrow skids or cradles to come in contact with coatings. Where required, provide pipe fittings with sufficient interior strutting or cross bracing to prevent deflection under their own weight.

3. Hoist pipe from trench side into trench by means of sling of smooth steel cable, canvas, leather, nylon or similar material.

4. For large diameter water lines, handle pipe only by means of sling of canvas, leather, nylon, or similar material. Sling shall be minimum 36 inches in width. Do not tear or wrinkle tape layers.

5. Use precautions to prevent injury to pipe, protective linings and coatings.

   a. Package stacked pipe on timbers. Place protective pads under banding straps at time of packaging.

   b. Pad fork trucks with carpet or other suitable material. Use nylon straps around pipe for lift when relocating pipe with crane or backhoe.

   c. Do not lift pipe using hooks at each end of pipe.

   d. Do not place debris, tools, clothing, or other materials on pipe.

6. Repair damage to pipe or protective lining and coating before final acceptance.

7. For cement mortar line and coated steel pipe, permit no visible cracks longer than 6 inches, measured within 15 degrees of line parallel to pipe longitudinal axis of finished pipe, except:

   a. In surface laitance of centrifugally cast concrete.

   b. In sections of pipe with steel reinforcing collars or wrappers.

   c. Within 12 inches of pipe ends.

8. Reject pipe with visible cracks (not meeting exceptions) and remove from project site.

B. Cleaning: Thoroughly clean and dry interior of pipe and fittings of foreign matter before installation, and keep interior clean until Work has been accepted. Keep joint contact surfaces clean until jointing is completed. Do not place debris, tools, clothing or other materials in pipe. After pipe laying and joining operations are completed, clean inside of pipe and remove debris.

C. Inspection: Before installation, inspect each pipe and fitting for defects. Reject defective, damaged or unsound pipe and fittings and remove them from site.

3.03 EARTHWORK

A. Conform to applicable provisions of Section 02317 - Excavation and Backfilling for Utilities and Section 02447 - Augering Pipe and Conduit.

B. Bedding: Use bedding materials in conformance with Section 02320 - Utility Backfill Materials.

C. Backfill: Use bank run sand or earth or native soil as specified in Section 02320 - Utility Backfill Materials. Backfill excavated areas in same day excavated. When not possible, cover excavated areas using steel plates on paved areas and other protective measures elsewhere.

D. Place material in uniform layers of prescribed maximum loose thickness and wet or dry material to approximately optimum moisture content. Compact to prescribed density Water tamping is not allowed.

E. Pipe Embedment: Including 6-inch pipe bedding and backfill to 12 inches above top of pipe.

3.04 PIPE CUTTING

A. Cut pipe 12 inches and smaller with standard wheel pipe cutters. Cut pipe larger than 12 inches in manner approved by Project Manager. Make cuts smooth and at right angles to axis of pipe. Bevel plain end with heavy file or grinder to remove sharp edges.

3.05 PIPING INSTALLATION

A. General Requirements:

1. Lay pipe in subgrade free of water.

2. Make adjustments of pipe to line and grade by scraping away subgrade or filling in with granular material.

3. Properly form bedding to fully support bell without wedging or blocking up bell.

4. Open Cut Construction: Keep pipe trenches free of water which might impair pipe laying operations. Grade trench to provide uniform support along bottom of pipe. Excavate for bell holes after bottom has been graded and in advance of placing pipe. Lay not more than nominal city block length of not more than 300 feet of pipe in trench ahead of backfilling operations. Cover or backfill laid pipe if pipe laying operations are interrupted and during non-working hours. Place backfill carefully and simultaneously on each side of pipe to avoid lateral displacement of pipe and damage to joints. If adjustment of pipe is required after it has been laid, remove and re-lay as new pipe.

B. Install pipe continuously and uninterrupted along each street on which work is to be performed. Obtain approval of Project Manager prior to skipping any portion of Work.

C. Protection of Pipeline: Securely place stoppers or bulkheads in openings and in end of line when construction is stopped temporarily and at end of each day's work.

D. Perform Critical Location as shown on Drawings. Refer to Section 02317 - Excavation and Backfill for Utilities for additional requirements at critical locations.

E. Laying Large Diameter Water Line

1. Lay not more than 50 feet of pipe in trench ahead of backfilling operations.

2. Dig trench proper width as shown. When trench width below top of pipe becomes 4 feet wider than specified, install higher class of pipe or improved bedding, as determined by Project Manager. No additional payment will be made for higher class of pipe or improved bedding.

3. Use adequate surveying methods and equipment; employ personnel competent in use of this equipment. Horizontal and vertical deviations from alignment as indicated on Drawings shall not exceed 0.10 feet. Measure and record "as-built" horizontal alignment and vertical grade at maximum of every 100 feet on record drawings.

4. Prevent damage to coating when placing backfill. Use backfill material free of large rocks or stones, or other material which could damage coatings.

5. Before assembling couplings, lightly coat pipe ends and outside of gaskets with cup grease or liquid vegetable soap to facilitate installation.

6. Prior to proceeding with critical tie-ins submit sequence of work based on findings from "critical location" effort.

F. Perform following additional procedures when working on plant sites.

1. Seventy-two hours prior to each plant shut down or connection, schedule coordination meeting with Project Manager and Water Production personnel. At this meeting, present proposed sequencing of Work and verification of readiness to complete Work as required and within time permitted. Do not proceed with Work until Project Manager agrees key personnel, equipment and materials are on hand to complete Work.

2. Prior to fully excavating around existing piping, excavate as minimal as possible to confirm type and condition of existing joints. Verify size, type, and condition of pipe prior to ordering materials or fully mobilizing for Work.

3. Do not proceed with connections to existing piping and identified critical stages of work unless approved by Project Manager and City's Utility Maintenance Division operator is present to observe.

4. Coordinate with Public Utilities Division (PUD) operators to obtain reduction in operating pressures prior to performing connections to existing piping.

5. Make connections to existing piping only when two valves are closed off between connection and source of water pressure. Do not make connection relying solely on one valve, unless otherwise approved by Project Manager.

6. Perform critical stages of Work identified on Drawings at night or during low water demand months as specified in Section 01110 - Summary of Work.

7. Excavation equipment used on plant sites to have smooth bucket; no teeth or side cutters.

8. Submit to Project Manager Lone Star Notification transmittal number prior to beginning excavation.

9. Before each "dig" with mechanical excavator, probe ground to determine potential obstructions. Repeat procedure until existing pipe is located or excavation reaches desired elevation. Perform excavations within one foot to existing piping by hand methods.

10. Provide adequate notice to pipe manufacture's representative when connecting or modifying existing prestressed or pretension concrete cylinder pipe.

11. Provide field surveyed (horizontal and vertical elevations) "as-builts" of new construction and existing underground utilities encountered. Submit in accordance with Section 01330 - Submittal Procedures.

12. Prior to performing plant work to be done on weekend, provide list of sites and contact person with phone numbers to Project Manager by noon on Thursday of week. Contact person must be accessible during weekend, have Houston Metro Area phone number, and be authorized to make emergency decisions.

13. No night work or plant shut down will be scheduled to begin two working days before or after designated City Holidays.

G. For tie-ins to existing water lines, provide necessary material on hand to facilitate connection prior to shutting down existing water line. Provide City a minimum of two weeks notice prior to shutting down existing water line.

3.06 JOINTS AND JOINTING

A. Rubber Gasketed Bell-and-Spigot Joints for Concrete Cylinder Pipe, Bar Wrapped Pipe PVC, Steel, and DIP:

1. After rubber gasket is placed in spigot groove of pipe, equalize rubber gasket cross section by inserting tool or bar recommended by manufacturer under rubber gasket and moving it around periphery of pipe spigot.

2. Lubricate gaskets with nontoxic water-soluble lubricant before pipe units are joined.

3. Fit pipe units together in manner to avoid twisting or otherwise displacing or damaging rubber gasket.

4. After pipe sections are joined, check gaskets to ensure that no displacement of gasket has occurred. If displacement has occurred, remove pipe section and remake joint as for new pipe. Remove old gasket, inspect for damage and replace if necessary before remaking joint.

5. Where preventing movement of 16-inch diameter or greater pipe is necessary due to thrust, use restrained joints as shown on Drawings.

   a. Include buoyancy conditions for soil unit weight when computing thrust restraint calculations.

   b. Do not include passive resistance of soil in thrust restraint calculations.

6. Except for PVC pipe, provide means to prevent full engagement of spigot into bell as shown on Drawings. Means may consist of wedges or other types of stops as approved by Project Manager.

7. Use feeler gauge to verify water-tightness of each pipe joint prior to application of joint grout. Perform feeler gauge test from interior of pipe, immediately after installation and after backfilling and compaction. Perform feeler gauge test in accordance with manufacturer's recommendations to determine if the joint is within tolerance. Provide

results to Project Manager. Notify Project Manager immediately when a joint is found to be out of tolerance or fails feeler gauge test, and submit repair plan for approval by Project Manager.

B. Flanged Joints where required on Concrete Cylinder Pipe, Bar Wrapped Pipe, Ductile Iron Pipe, or Steel Pipe:

1. AWWA C 207. Prior to installation of bolts, accurately center and align flanged joints to prevent mechanical prestressing of flanges, pipe and equipment. Align bolt holes to straddle vertical, horizontal or north-south center line. Do not exceed 3/64 inch per foot inclination of flange face from true alignment.

2. Use full-face gaskets for flanged joints. Provide 1/8-inch-thick cloth inserted rubber gasket material. Cut gaskets at factory to proper dimensions.

3. Use galvanized or black nuts and bolts to match flange material. Use cadmium-plated steel nuts and bolts underground. Tighten bolts progressively to prevent unbalanced stress. Maintain at all times approximately same distance between two flanges at points around flanges. Tighten bolts alternately (180° apart) until all are evenly tight. Draw bolts tight to ensure proper seating of gaskets. Provide Densco petroleum based tape or approved equal for all exposed portions of nuts, bolts and pipe.

4. Full length bolt isolating sleeves and washers shall be used with flanged connections. Furnish kits in accordance with City's "Approved Products List."

5. For in-line flange joints 30 inches in diameter and greater and at butterfly valve flanges, provide Pyrox G-10 with nitrite seal, conforming to ANSI A 21.11 mechanical joint gaskets. For in-line flange joints sized between 12 inches in diameter and greater and 24 inches in diameter and smaller, provide Phenolic PSI with nitrite seal gasket conforming to ANSI A 21.11 mechanical joint gaskets.

C. Welded Joints (Concrete Cylinder Pipe, Bar Wrapped Pipe, Steel Pipe):

1. Prior to starting work, provide certification of qualification for welders employed on project for type of work procedures and positions involved.

2. Joints: AWWA C 206. Full-fillet, single lap-welded slip-type either inside or outside, or double butt-welded type; use automatic or hand welders; completely penetrate deposited metal with base metal; use filler metal compatible with base metal; keep inside of fittings and joints free from globules of weld metal which would restrict flow or become loose. Do not use mitered joints. For interior welded joints, complete backfilling before welding. For exterior field-welded joints, provide adequate working room under and beside pipe. Use exterior welds for 30-inch and smaller.

3. Furnish welded joints with trimmed spigots and interior welds for 36-inch and larger pipe.

4. Bell-and-spigot, lap-welded slip joints: Deflection may be taken at joint by pulling joint up to 3/4 inch as long as 1 ½ inch minimum lap is maintained. Spigot end may be miter cut to take deflections up to 5 degrees as long as joint tolerances are maintained. Miter end cuts of both ends of butt-welded joints may be used for joint deflections of up to 5 degrees.

5. Align piping and equipment so that no part is offset more than 1/8 inch. Set fittings and joints square and true, and preserve alignment during welding operation. For butt welded joints, align abutting ends to minimize offset between surfaces. For pipe of same nominal wall thickness, do not exceed 1/16 inch offset. Use line-up clamps for this purpose; however, take care to avoid damage to linings and coatings.

6. Protect coal-tar-epoxy lining during welding by draping an 18-inch-wide strip of heat resistant material over top half of pipe on each side of lining holdback to avoid damage to lining by hot splatter. Protect tape coating similarly if external welding is required.

7. Welding rods: Compatible with metal to be welded to obtain strongest bond, E-70XX.

8. Deposit metal in successive layers to provide at least 2 passes or beads for automatic welding and 3 passes or beads for manual welding in completed weld.

9. Deposit no more than 1/4 inch of metal on each pass. Thoroughly clean each individual pass with wire brush or hammer to remove dirt, slag or flux.

10. Do not weld under weather condition that would impair strength of weld, such as wet surface, rain or snow, dust or high winds, unless work is properly protected.

11. Make tack weld of same material and by same procedure as completed weld. Otherwise, remove tack welds during welding operation.

12. Remove dirt, scale, and other foreign matter from inside piping before tying in sections, fittings, or valves.

13. Welded Joints for Large Diameter Water Lines:

    a. Furnish pipe with trimmed spigots and interior welds for 36-inch and larger pipe.

    b. Use exterior welds for 30 inch and smaller.

    c. Only one end may be miter cut. Miter end cuts of both ends of butt-welded joints may be used for joint deflections of up to 2 ½ degrees.

    d. For large diameter water lines, employ an independent certified testing laboratory, approved by Project Manager, to perform weld acceptance tests on welded joints. Include cost of such testing and associated work to accommodate

testing in contract unit price bid for water line. Furnish copies of test reports to Project Manager for review. Project Manager has final decision as to suitability of welds tested.

1) Weld acceptance criteria:

a) Conduct in accordance with ASTM E165- Standard Test Method for Liquid Penetrant Examination and ASTM E709 Standard Guide for Magnetic Particle Examination. Use X-ray methods for butt welds, for 100 percent of joint welds.

b) Examine welded surfaces for the following defects:

i) Cracking.

ii) Lack of fusion/penetration.

iii) Slag which exceeds one-third (t) where (t) equals material thickness.

iv) Porosity/Relevant rounded indications greater than 3/16 inch; rounded indication is one of circular or elliptical shape with length equal to or less than three times its width.

v) Relevant linear indications in which length of linear indication exceeds three times its width.

vi) Four or more relevant 1/16-inch rounded indications in line separated by 1/16 inch or less edge to edge.

14. After pipe is joined and prior to start of welding procedure, make spigot and bell essentially concentric by jacking, shimming or tacking to obtain clearance tolerance around periphery of joint except for deflected joints.

15. Furnish each welder employed steel stencil for marking welds, so work of each welder can be identified. Mark pipe with assigned stencil adjacent to weld. When welder leaves job, stencil must be voided and not duplicated. Welder making defective welds must discontinue work and leave project site. Welder may return to project site only after recertification.

16. Provide cylindrical corrosion barriers for epoxy lined steel pipe 24-inch diameter and smaller, unless minimum wall thickness is 0.5 inches or greater.

a. In addition to welding requirements contained here in Paragraph 3.06, conform to protection fitting manufacturer's installation recommendations.

b. Provide services of technical representative of manufacturer available on site at beginning of pipe laying operations. Representative to train welders and advise regarding installation and general construction methods. Welders must have 12 months prior experience installing protection fittings.

c. All steel pipe is to have cutback 3/4 inch to no greater than 1 inch of internal diameter coating from weld bevel.

d. Furnish steel fittings with cylindrical corrosion barriers with shop welded extensions to end of fittings. Extension length to measure no less than diameter of pipe. Shop apply lining in accordance with AWWA C 210 or AWWA C 213.

e. All steel pipe receiving field adjustments are to be cold cut using standard practices and equipment. No cutting using torch is to be allowed.

D. Harnessed Joints (Concrete Cylinder Pipe, Bar Wrapped Pipe):

1. Use of snap-ring type restrained joints on pipe is limited to 20-inch through 48-inch diameters.

2. Position snap-ring joint bolt on top (12 o'clock portion). Provide minimum 1/2-inch joint recess. Use joint "diapers" minimum of 12 inches wide.

3. For field adjustments with deflections beyond manufacturer's recommendations:

   a. Field trim spigot.

   b. Do not engage ring.

4. Harnessed joints are not permitted in areas defined on Drawings as potentially petroleum contaminated material, in tunnels, or at bend greater than 5 degrees.

5. Install harness type joints including snap rings at straight sections of pipe.

E. Restrained Joints

1. For existing water lines and water lines less than 16 inches in diameter, restrain pipe joints with concrete thrust blocks.

2. Thrust restraint lengths shown on Drawings are minimum anticipated lengths. These lengths are based on deflections indicated and on use of prestressed concrete cylinder pipe for large diameter lines and ductile iron pipe for small diameter lines. Adjustments in deflections or use of other pipe material may result in reduction or increase of thrust lengths. Perform calculations by pipe manufacturer to verify proposed thrust restraint lengths. Submit calculations for all pipe materials sealed by a registered Professional Engineer in State of Texas for review by Project Manager. Make adjustments in thrust restraint lengths at no additional cost to City.

3. Passive resistance of soil will not be permitted in calculation of thrust restraint.

4. For 16-inch lines and larger use minimum 16-foot length of pipe in and out of joints made up of beveled pipe where restraint joint lengths are not identified on Drawings. Otherwise, provide restraint joints for a minimum length of 16 feet on each side of beveled joints.

5. Installation.

   a. Install restrained joints mechanism in accordance with manufacturer's recommendations.

   b. Examine and clean mechanism; remove dirt, debris and other foreign material.

   c. Apply gasket and joint NSF 61 FDA food grade approved lubricant.

   d. Verify gasket is evenly seated.

   e. Do not over stab pipe into mechanism.

6. Prevent any lateral movement of thrust restraints throughout pressure testing and operation.

7. Place 2500 psi concrete conforming to Section 03315 - Concrete for Utility Construction, for blocking at each change in direction of existing water lines, to brace pipe against undisturbed trench walls. Finish placement of concrete blocking, made from Type I cement, 4 days prior to hydrostatic testing of pipeline. Test may be made 2 days after completion of blocking if Type II cement is used.

F. Joint Grout (Concrete Cylinder Pipe, Bar Wrapped Pipe, Steel Pipe):

1. Mix cement grout mixture by machine except when less than 1/2 cubic yard is required. When less than 1/2 cubic yard is required, grout may be hand mixed. Mix grout only in quantities for immediate use. Place grout within 20 minutes after mixing. Discard grout that has set. Retempering of grout by any means is not permitted.

2. Prepare grout in small batches to prevent stiffening before it is used. Do not use grout which has become so stiff that proper placement cannot be assured without retempering. Use grout for filling grooves of such consistency that it will adhere to ends of pipe.

3. Surface Preparation: Remove defective concrete, laitance, dirt, oil, grease and other foreign material from concrete surfaces with wire brush or hammer to sound, clean surface. Remove rust and foreign materials from metal surfaces in contact with grout.

4. Follow established procedures for hot and cold weather concrete placement.

5. Complete joint grout operations and backfilling of pipe trenches as closely as practical to pipe laying operations. Allow grouted exterior joints to cure at least 1 hour before compacting backfill.

6. Grouting exterior joint space: Hold wrapper in place on both sides of joint with minimum 5/8-inch-wide steel straps or bands. Place no additional bedding or backfill material on either side of pipe until after grout band is filled and grout has mechanically stiffened. Pull ends of wrapper together at top of pipe to form access hole. Pour grout down one side of pipe until it rises on other side. Rod or puddle grout to ensure complete filling of joint recess. Agitate for 15 minutes to allow excess water to seep through joint band. When necessary, add more grout to fill joint completely. Protect gap at top of joint band from backfill by allowing grout to stiffen or by covering with structurally protective material. Do not remove band from joint. Proceed with placement of additional bedding and backfill material.

7. Interior Joints for Pipe 24 inches and Smaller: Circumferentially butter bell with grout prior to insertion of spigot, strike off flush surplus grout inside pipe by pulling filled burlap bag or inflated ball through pipe with rope. After joint is engaged, finish off joint grout smooth and clean. Use swab approved by Project Manager for 20-inch pipe and smaller.

8. Protect exposed interior surfaces of steel joint bands by metallizing, by other approved coatings, or by pointing with grout. Joint pointing may be omitted on potable water pipelines if joint bands are protected by zinc metallizing or other approved protective coatings.

9. Remove and replace improperly cured or otherwise defective grout.

10. Strike off grout on interior joints and make smooth with inside diameter of pipe.

11. When installed in tunnel or encasement pipe and clearance within casing does not permit outside grout to be placed in normal manner, apply approved flexible sealer, such as Flex Protex or equal, to outside joint prior to joint engagement. Clean and prime surfaces receiving sealer in accordance with manufacturer's recommendations. Apply sufficient quantities of sealer to assure complete protection of steel in joint area. Fill interior of joint with grout in normal manner after joint closure.

12. Interior Joints for Water Lines 30 inches and Larger: Clean joint space, wet joint surfaces, fill with stiff grout and trowel smooth and flush with inside surfaces of pipe using steel trowel so that surface is smooth. Accomplish grouting at end of each work day. Obtain written acceptance from Project Manager of inside joints before proceeding with next day's pipe laying operation. During inspection, insure no delamination of joint mortar has occurred by striking joint mortar lining with rubber mallet. Remove and replace delaminated mortar lining.

13. Work which requires heavy equipment to be over water line must be completed before mortar is applied to interior joints.

14. Do not apply grout to joints that are out of tolerance until acceptable repairs are made.

G. Large Diameter Water Main Joint Testing: In addition to testing individual joints with feeler gauge approximately 1/2 inch wide and 0.015-inch thick, use other joint testing procedure approved or recommended by pipe manufacturer which will help ensure watertight installation prior to backfilling. Perform tests at no additional cost to City.

H. Make curves and bends by deflecting joints or other method as recommended by manufacturer and approved by Project Manager. Submit details of other methods of providing curves and bends which exceed manufacturer's recommended deflection prior to installation.

1. Deflection of pipe joints shall not exceed maximum deflection recommended by pipe manufacturer, unless otherwise indicated on Drawings.

2. If deflection exceeds that specified but is less than 5 percent, repair entire deflected pipe section such that maximum deflection allowed is not exceeded.

3. If deflection is equal to or exceeds 5 percent from that specified, remove entire portion of deflected pipe section and install new pipe.

4. Replace, repair, or reapply coatings and linings as required.

5. Assessment of deflection may be measured by Project Manager at location along pipe. Arithmetical averages of deflection or similar average measurement methods will not be deemed as meeting intent of standard.

6. When rubber gasketed pipe is laid on curve, join pipe in straight alignment and then deflect to curved alignment.

I. Closures Sections and Approved Field Modifications to Steel, Concrete Cylinder Pipe, Bar Wrapped Pipe and Fittings:

1. Apply welded-wire fabric reinforcement to interior and exterior of exposed interior and exterior surfaces greater than 6 inches in diameter. Welded-wire fabric: minimum W1; maximum spacing 2 inches by 4 inches; 3/8 inch from surface of steel plate or middle third of lining or coating thickness for mortar thickness less than 3/4 inch.

2. Fill exposed interior and exterior surfaces with nonshrink grout.

3. For pipe diameters 36 inches and greater, perform field welds on interior and exterior of pipe.

4. For large diameter water lines, provide minimum overlap of 4 inches of butt strap over adjacent piece on butt-strap closures.

3.07 CATHODIC PROTECTION APPURTENANCES

A. Where identified on Drawings, modify pipe for cathodic protection as detailed on Drawings and specified. Unless otherwise noted, provide insulation kits including test stations at connections to existing water system or at locations to isolate one type of cathodic system from another type, between water line, access manhole piping and other major openings in water line, or as shown on Drawings.

B. Bond joints for pipe installed in tunnel or open cut, except where insulating flanges are provided. Weld strap or clip between bell and spigot of each joint or as shown on Drawings. No additional bonding required where joints are welded for thrust restraint. Repair coatings as specified by appropriate AWWA standard, as recommended by manufacturer, and as approved by Project Manager.

C. Bonding Strap or Clip: Free of foreign material that may increase contact resistance between wire and strap or clip.

3.08 SECURING, SUPPORTING AND ANCHORING

A. Support piping as shown on Drawings and as specified in this Section, to maintain line and grade and prevent transfer of stress to adjacent structures.

B. Where shown on Drawings, anchor pipe fittings and bends installed on water line by welding consecutive joints of pipe together to distance each side of fitting. Restrained length, as shown on Drawings, assumes that installation of pipe and subsequent hydrostatic testing begins upstream and proceed downstream, with respect to normal flow of water in pipe. If installation and testing differs from this assumption, submit for approval revised method of restraining pipe joints upstream and downstream of device used to test against (block valve, blind flange or dished head plug).

C. Use adequate temporary blocking of fittings when making connections to distribution system and during hydrostatic tests. Use sufficient anchorage and blocking to resist stresses and forces encountered while tapping existing water line.

3.09 POLYETHYLENE WRAP FOR DUCTILE IRON PIPE

A. Double wrap pipe and appurtenances (except fire hydrants and fusion bond or polyurethane coated fittings) with 8-mil polyethylene film.

B. Conform to requirements of Section 02528 - Polyethylene Wrap.

3.10 CLEANUP AND RESTORATION

A. Provide cleanup and restoration crews to work closely behind pipe laying crews, and where necessary, during disinfection and hydrostatic testing, service transfers, abandonment of old water lines, backfill and surface restoration.

B. Unless otherwise approved by Project Manager, comply with the following;

1. Once water line is installed to limits approved in layout submitted, immediately begin preparatory work for disinfection effort.

2. No later than three days after completing disinfection preparatory work, submit to City appropriate request for disinfection.

3. If City fails to perform initial disinfection of lines in accordance with Section 2514 - Disinfection of Water Lines, within seven days from submission of appropriate request, and if approved by Project Manager, pipe laying operations may continue beyond approved limits until the City responds.

4. Immediately after transfer of services, begin abandonment of old water lines and site restoration.

5. Do not exceed a total of 50% of total project linear feet of disturbed right-of-way and easement until site is restored in accordance with Section 01740 - Site Restoration.

6. Exceeding any of the above footage limitations shall be considered a material breach of the Contract and subject to termination in accordance with the General Conditions.

C. For large diameter water lines, do not install more than 2,000 linear feet of water line, without previous 2,000 linear feet being restored in accordance with Section 01740 - Site Restoration. Schedule paving crews so repaving work will not lag behind pipe laying work by more than 1,000 linear feet. Failure to comply with this requirement shall be considered a material breach of the Contract and subject to termination in accordance with the General Conditions.

3.11 CLEANING PIPING SYSTEMS

A. Remove construction debris or foreign material and thoroughly broom clean and flush piping systems. Provide temporary connections, equipment and labor for cleaning. City must inspect water line for cleanliness prior to filling.

3.12 DISINFECTION OF WATER LINES

A. Conform to requirements of Section 02514 - Disinfection of Water Lines.

3.13 FIELD HYDROSTATIC TESTS

A. Conform to requirements of Section 02515 - Hydrostatic Testing of Pipelines.

Section 02513S

WET CONNECTIONS

The following supplements modify Specification Section 02513 – Wet Connections. Where a portion of the Specification or Detail is modified or deleted by this Supplementary Specification, the unaltered portions of the Specification shall remain in effect.

1.03 REFERENCES: Add the following Paragraph B:

B. OSHA 29 CFR 1926.1101 – Asbestos.

Add the following new Paragraph:

3.03 CONNECTION TO ASBESTOS-CEMENT (AC) PIPE

A. Notify Project Manager when AC pipe is encountered.

B. Refer to Section 02221 – Removing Existing Pavements and Structures for crew training, safety precautions, and AC pipe removal requirements.

C. Protocol:

1. Mechanically excavate to no more than 6 in. of AC Pipe. Carefully uncover the remainder of pipe by hand or with shovel.
2. Keep pipe adequately wet before and during work.
3. Place 2 layers of 6 mil polyethylene sheeting under the asbestos pipe to prevent soil contamination.
4. Use hand tools to remove collars. Replace minimum 6 ft. section of pipe. Use of power tools is prohibited.
5. Do not crush AC pipe in place. Remove waste AC pipe.

END OF SUPPLEMENT

Approved by:

Mark L. Loethen, P.E., CFM, PTOE
City Engineer
Department of Public Works & Engineering

11/17/2012
Date

Section 02513

WET CONNECTIONS

PART 1 GENERAL

1.01 SECTION INCLUDES

A. Wet connections for new water lines and service lines to existing water lines.

1.02 MEASUREMENT AND PAYMENT

A. Unit Prices.

1. Payment for wet connections shown on Drawings is on unit price basis for each wet connection. Separate payment will be made for each size of water line.

2. No compensation will be given for extra work or for damages occurring as result of incomplete shutoff.

3. Refer to Section 01270 - Measurement and Payment for unit price procedures.

B. Stipulated Price (Lump Sum). If Contract is Stipulated Price Contract, payment for work in this Section is included in total Stipulated Price.

1.03 REFERENCES

A. AWWA C 800 - Standard for Underground Service Line Valves and Fittings.

1.04 DEFINITIONS

A. Wet connections consist of isolating sections of pipe to be connected with existing valves, draining isolated sections, and completing connections.

B. Connection of 2-inch or smaller lines, which may be referred to on Drawings as "2-inch standard connections" or "gooseneck connections" will be measured as 2-inch wet connections. This item is not to be used as part of 2-inch service line.

PART 2 PRODUCTS

2.01 MATERIALS

A. Pipe shall conform to requirements of applicable portions of Sections 02501 through 02528 related to piping materials and to water distribution.

B. Corporation cocks and saddles shall conform to requirements of Section 02512 - Water Tap and Service Line Installation.

C. Valves shall conform to requirements of Section 02521 - Gate Valves.

D. Brass fittings shall conform to requirements of AWWA C 800.

PART 3 EXECUTION

3.01 CONNECTION OPERATIONS

A. Plan wet connections in manner and at hours with least inconvenience public. Notify Project Manager at least 72 hours in advance of making connections.

B. Do not operate valves on water lines in use by City. City of Houston Utility Operations Division will handle, at no cost to Contractor, operations involving opening and closing valves for wet connections.

C. Conduct connection operations when Inspector is at job site. Connection work shall progress without interruption until complete once existing water lines have been cut or plugs have been removed for making connections.

3.02 2-INCH WET CONNECTIONS

A. Tap water line. Use corporation cocks, saddles, copper tubing as required for line and grade adjustment, and brass fittings necessary to adapt to existing water line. Use 2-inch valves when indicated on Drawings for 2-inch copper gooseneck connections.

END OF SECTION

Section 02525S

TAPPING SLEEVES AND VALVES

The following supplements modify Specification Section 02525 – Tapping Sleeves and Valves. Where a portion of the Specification or Detail is modified or deleted by this Supplementary Specification, the unaltered portions of the Specification shall remain in effect.

1.03 REFERENCES: Add the following Paragraph I:

I. OSHA 29 CFR 1926.1101 – Asbestos.

Add the following new Paragraph:

3.03 ADDITIONAL REQUIREMENTS FOR TAPPING ASBESTOS-CEMENT (AC) PIPE

A. Notify Project Manager when AC pipe is encountered.

B. Refer to Section 02221 – Removing Existing Pavements and Structures for crew training, safety precautions, and AC pipe removal requirements.

C. Protocol:

1. Mechanically excavate to no more than 6 in. of AC Pipe. Carefully uncover the remainder of pipe by hand or with shovel.
2. Keep pipe adequately wet before and during work.
3. Locate tap a minimum of 2 ft. away from existing AC collar.
4. Use of power tools is prohibited.
5. Remove waste AC pipe coupon.

END OF SUPPLEMENT

Approved by:

Mark L. Loethen, P.E., CFM, PTOE
City Engineer
Department of Public Works & Engineering

11/17/2012
Date

Section 02525

TAPPING SLEEVES AND VALVES

PART 1 GENERAL

1.01 SECTION INCLUDES

A. Tapping sleeves and valves for connections to existing water system.

1.02 MEASUREMENT AND PAYMENT

A. Unit Prices.

1. Payment is on unit price basis for each tap installed.

2. Refer to Section 01270 - Measurement and Payment for unit price procedures.

3. For water lines 4-inches and greater, no payment will be made until coupon (cut out portion of pipe tapped) is delivered to City.

B. Stipulated Price (Lump Sum). If Contract is Stipulated Price Contract, payment for work in this Section is included in total Stipulated Price.

1.03 REFERENCES

A. ASTM A240 - Standard Specification for Heat-Resisting Chromium and Chromium-Nickel Stainless Steel Plate, Sheet, and Strip for Pressure Vessels

B. ASTM A193 Standard Specification for Alloy-Steel and Stainless Steel Bolting Materials for High-Temperature Service.

C. ASTM A194 Standard Specification for Carbon and Alloy Steel Nuts for Bolts for High-Pressure or High-Temperature Service

D. AWWA C 110 - Standard for Ductile-Iron and Gray-Iron Fittings, 3 in. through 48 in., for Water and other Liquids.

E. AWWA C 200 - Standard for Steel Water Pipe - 6 in. and Larger.

F. AWWA C 207 - Standard for Steel Pipe Flanges for Waterworks Service - Sizes 4 in. Through 144 in.

G. AWWA C 500 - Standard for Metal Seated Gate Valves, for Water Supply Service.

H. AWWA C 223 - Fabricated Steel and Stainless Steel Tapping Sleeves.

1.04 SUBMITTALS

A. Conform to requirements of Section 01330 - Submittal Procedures.

B. Submit results of tapping sleeves NPT test opening.

C. Submit manufacturer's affidavit as required in Section 02521 - Gate Valves.

1.05 DELIVERY, STORAGE AND HANDLING

A. Ship steel sleeves in wooden crates that provide protection from damage to epoxy coating during transport and storage.

PART 2 P R O D U C T S

2.01 MATERIALS

A. Tapping Sleeves:

1. Tapping Sleeve Bodies: AWWA C 110 cast or ductile iron or AWWA C 200 carbon steel in two sections to be bolted together with high-strength, corrosion-resistant, low-alloy steel bolts with mechanical joint ends.

2. Branch Outlet of Tapping Sleeve:

a. Flanged, machined recess, AWWA C 207, Class D, ANSI 150 pound drilling.

b. Gasket: Affixed around recess of tap opening to prevent rolling or binding during installation.

3. Use cast iron split sleeve where fire service from 6-inch water line is approved.

B. Welded-steel tapping-sleeve bodies may be used in lieu of cast or ductile iron bodies for following sizes and with following restrictions:

1. Flange: AWWA C 207, Class D, ANSI 150 pound drilling.

2. Gasket: Affixed around recess of tap opening to prevent rolling or binding during installation.

3. Steel sleeves are restricted to use on pipe sizes 6 inches and larger.

4. Body: Heavy, welded-steel construction; top half grooved to retain neoprene O-ring seal permanently against outside diameter of pipe.

5. Bolts: AWWA C 500 Section 3.5; coated with 100 percent vinyl resin or corrosive resistant material.

6. Steel Sleeves Finish: Fusion-bonded epoxy coated to minimum 12 mil thickness.

7. Finished Epoxy Coat: Free of laminations and blisters; and remain pliant and resistant to impact with non-peel finish.

8. Provide approved steel tapping sleeves

9. Tapping Sleeves: Provide with 3/4-inch NPT test opening for testing prior to tapping. Provide 3/4-inch bronze plug for opening.

10. Do not use steel sleeves for taps greater than 75 percent of pipe diameter.

11. Comply with AWWA C 223 - Fabricated Steel and Stainless Steel Tapping Sleeves.

C. Stainless Steel tapping-sleeve bodies and flange may be used in lieu of cast or ductile iron bodies for following sizes and with following restrictions:

1. Flange: ASTM A240 Stainless Steel, Type 304, ANSI 150 pound drilling.

2. Gasket: Full circumferential, affixed around recess of tap opening to prevent rolling or binding during installation, compounded for water and sewer service.

3. Stainless Steel sleeves are restricted to use on pipe sizes 4 inches and larger.

4. Body: ASTM A240 Stainless Steel, Type 304.

5. Bolts: ASTM A193 Stainless Steel, Type 304.

6. Nuts: ASTM A194 Stainless Steel, Type 304

7. Branch Outlet: Heavy Stainless Steel Pipe

8. Provide approved stainless steel tapping sleeves.

9. Do not use stainless steel sleeves for taps greater than 75 percent of pipe diameter.

10 Comply with AWWA C 223 - Fabricated Steel and Stainless Steel Tapping Sleeves.

D. Tapping Valves: Meet requirements of Section 02521 - Gate Valves with following exceptions:

1. Inlet Flanges:

a. AWWA C 110; Class 125.

b. AWWA C 110; Class 150 and higher: Minimum 8-hole flange.

2. Outlet: Standard mechanical or push-on joint to fit any standard tapping machine.

3. Valve Seat Opening: Accommodate full-size shell cutter for nominal size tap without contact with valve body; double disc.

E. Valve Boxes: Standard Type "A" valve boxes conforming to requirements of Section 02085 - Valve Boxes, Meter Boxes, and Meter Vaults.

PART 3 EXECUTION

3.01 APPLICATION

A. Install tapping sleeves and valves at locations and of sizes shown on Drawings. Install sleeve so valve is in horizontally level position unless otherwise indicated on Drawings.

B. Clean tapping sleeve, tapping valve, and pipe prior to installation and in accordance with manufacturer's instructions.

C. Hydrostatically test installed tapping sleeve to 150 psig for minimum of 15 minutes. Inspect sleeve for leaks, and remedy leaks prior to tapping operation.

D. When tapping concrete pressure pipe, size on size, use shell cutter one standard size smaller than water line being tapped.

E. Do not use Large End Bell (LEB) increasers with next size tap unless existing pipe is asbestos-cement.

3.02 INSTALLATION

A. Verify outside diameter of pipe to be tapped prior to ordering sleeve.

B. Tighten bolts in proper sequence so that undue stress is not placed on pipe.

C. Align tapping valve properly and attach to tapping sleeve. Insert insulation sleeves into flange holes of tapping valve and pipe. Make insertions of sleeves on pipe side of tapping valve. Do not damage insulation sleeves during bolt tightening process.

D. Make tap with sharp, shell cutter:

1. For 12-inch and smaller tap, use minimum cutter diameter one-half inch less than nominal tap size.

2. For 16-inch and larger tap, use manufacturer's recommended cutter diameter.

E. Withdraw coupon and flush cuttings from newly-made tap.

F. Wrap:

1. For 12-inch and smaller tap, wrap completed tapping sleeve and valve in accordance with Section 02528 - Polyethylene Wrap.

2. For 16-inch and larger tap, apply coal tar epoxy around completed tapping sleeve and valve. The coal tar epoxy shall be applied with minimum of two (2) coats. Each coat of coal tar epoxy shall have minimum dry film thickness of 16 mils.

G. Place concrete thrust block behind tapping sleeve (not over tapping sleeve and valve).

H. Request inspection of installation prior to backfilling.

I. Backfill in accordance with Section 02317 - Excavation and Backfill for Utilities.

END OF SECTION

Section 2752S

The following supplement modifies Section 02752 Standard Specification. Where a portion of the Specification is modified or deleted by this Supplementary Specification, the unaltered portions of the Specification shall remain in effect.

1.01 SECTION INCLUDES.

Add Part C as follows.
C. Full depth saw cutting of concrete pavement as required by other agency.

1.02 MEASUREMENT AND PAYMENT

Add item 6.
6. Full depth Saw cutting for concrete pavement will be paid on linear foot base, if required by other agency for joining with existing roadway.

Renumber item 6 as 7

END OF SUPPLEMENT

Approved:

John H Kuo, P.E.
Assistant Director
Engineering and Construction Division

12/29/09
Date

Section 02752

CONCRETE PAVEMENT JOINTS

PART 1 GENERAL

1.01 SECTION INCLUDES

A. Joints for concrete paving; concrete sidewalks, concrete driveways, curbs, and curb and gutters.

B. Saw-cutting existing concrete or asphalt pavements for new joints.

1.02 MEASUREMENT AND PAYMENT

A. Unit Prices.

1. Payment for street pavement expansion joints, with or without load transfer, is on linear foot basis.

2. Payment for horizontal dowels is on a unit price basis for each horizontal dowel.

3. No separate payment will be made for formed or sawed street pavement contraction joints and longitudinal weakened plane joints. Include payment in unit price for Concrete Paving.

4. No separate payment will be made for joints for Curb, Curb and Gutter, Saw-tooth Curb, Concrete Sidewalks, and Concrete Driveways. Include payment in unit price for Curb and Gutter, Concrete Sidewalks, and Concrete Driveways.

5. Payment will be made for Preformed Expansion Joints on a linear foot basis only when field conditions require that sidewalk be moved adjacent to existing concrete structure (i.e., street, back of curb, etc.).

6. Refer to Section 01270 - Measurement and Payment for unit price procedures.

B. Stipulated Price (Lump Sum). If Contract is Stipulated Price Contract, payment for work in this Section is included in total Stipulated Price.

1.03 REFERENCES

A. ASTM A 615 - Standard Specification for Deformed and Plain Billet-Steel Bars for Concrete Reinforcement.

B. ASTM D 994 - Standard Specification for Preformed Expansion Joint Filler for Concrete (Bituminous Type).

C. ASTM D 1751 - Standard Specification for Preformed Expansion Joint Filler for Concrete Paving and Structural Construction (Nonextruding and Resilient Bituminous Types).

D. ASTM D 3405 - Standard Specification for Joint Sealants, Hot-Applied, for Concrete and Asphalt Pavements.

E. TxDOT Tex-525-C - Tests for Asphalt and Concrete Joint Sealers

1.04 SUBMITTALS

A. Conform to requirements of Section 01330 - Submittal Procedures.

B. Submit product data for joint sealing compound and proposed sealing equipment for approval.

C. Submit samples of dowel cup, metal supports, and deformed metal strip for approval. Submit manufacturer's recommendation for placing sealant(s).

PART 2 P R O D U C T S

2.01 BOARD EXPANSION JOINT MATERIAL

A. Filler board of selected stock. Use wood of density and type as follows:

1. Clear, all-heart cypress weighing no more than 40 pounds per cubic foot, after being oven dried to constant weight.

2. Clear, all-heart redwood weighing no more than 30 pounds per cubic foot, after being oven dried to constant weight.

2.02 PREFORMED EXPANSION JOINT MATERIAL

A. Bituminous fiber and bituminous mastic composition material conforming to ASTM D 994 and ASTM D 1751.

2.03 JOINT SEALING COMPOUND

A. Conform joint sealants to one of sealant classes described in this section.

B. Conform hot-poured rubber-asphalt compound to ASTM D 3405.

C. Two-component Synthetic Polymer.

1. Curing is to be by polymerization and not by evaporation of solvent or fluxing of harder particles.

2. Cure sufficiently at average temperature of 25 ∀ 1 C (77 ∀ 2 F) so as not to pick up under wheels of traffic in maximum three hours.

3. Performance requirements, when tested in accordance with TxDOT Tex-525-C, shall meet above curing times and requirements as follows:

Cold-Extruded and Cold-Pourable (Self-Leveling) Specifications	
Property	**Requirement**
Penetration, 25 C (77 F) 150 g Cone, 5 s, 0.1 mm (in.), maximum	130
Bond and Extension 50%, -29 C (-20 F), 3 cycles: X Dry Concrete Block X Steel blocks (Primed, if recommended by manufacturer) *Steel blocks shall be used when armor joints are specified	 Pass Pass
Flow at 70 C (158 F)	None
Water content % by mass, maximum	5.0
Resilience: X Original sample, % min. (cured) X Oven-aged at 70 C (158 F), % min.	 50 50
Cold-extruded material only - Cold Flow (10 minutes)	None

After bond and extension test, there shall be no evidence of cracking, separation or other opening that is over 3 millimeters (1/8 inch) deep in sealer or between sealer and test blocks.

4. Provide cold-extruded type for vertical or sloping joints.

5. Provide self-leveling type for horizontal joints.

D. Self-Leveling, Low Modulus Silicone or Polyurethane Sealant for Asphaltic Concrete and Portland Cement Concrete Joints. This shall be a single component self-leveling silicone or polyurethane material that is compatible with both asphalt and concrete pavements. The sealer shall not require a primer for bond; a backer rod shall be required which is compatible with the sealant; no reaction shall occur between rod and sealant.

When tested in accordance with TxDOT Tex-525-C, self-leveling sealant shall meet following requirements:

Self-Leveling, Low Modulus Silicone or Polyurethane Sealant	
Property	**Requirements**
Tack Free Time, 25 ∀ 1 C (77 ∀ 2 F), minutes	120 maximum
Nonvolatile content, % by mass	93 minimum
Tensile Strength and 24 Hour Extension Test: X Initial, 10-day cure, 25 ∀ 1 C (77 ∀ 2 F), kPa (psi) X After Water Immersion, kPa (psi) X After Heat Aging, kPa (psi) X After Cycling, -29 C (-20 F), 50%, 3 cycles, kPa (psi) X 24 Hour Extension	 X 21 to 69 (3 to 10) X 21 to 69 (3 to 10) X 21 to 69 (3 to 10) X 21 to 69 (3 to 10) X Pass (All Specimens) After 24 hours, there shall be no evidence of cracking, separation or other opening that is over 3 mm (1/8 in.) deep at any point in the sealer or between the sealer and test blocks.

)4 LOAD TRANSMISSION DEVICES

A. Smooth, steel dowel bars conforming to ASTM A 615, Grade 60. When indicated on Drawings, encase one end of dowel bar in approved cap having inside diameter 1/16 inch greater than diameter of dowel bar.

B. Deformed steel tie bars conforming to ASTM A 615, Grade 60.

2.05 SUPPORTS FOR REINFORCING STEEL AND JOINT ASSEMBLY

A. Employ supports of approved shape and size that will secure reinforcing steel and joint assembly in correct position during placing and finishing of concrete. Space supports as directed by Project Manager.

PART 3 EXECUTION

3.01 PLACEMENT

A. When new Work is adjacent to existing concrete, place joints at same location as existing joints in adjacent pavement.

B. If limit of removal of existing concrete or asphalt pavement does not fall on existing joint, saw cut existing pavement minimum of 2 inches deep to provide straight, smooth joint surface without chipping, spalling or cracks.

3.02 CONSTRUCTION JOINTS

A. Place transverse construction joint wherever concrete placement must be stopped for more than 30 minutes. Place longitudinal construction joints at interior edges of pavement lanes using No. 6 deformed tie bars, 30 inches long and spaced 18 inches on centers.

3.03 EXPANSION JOINTS

A. Place 3/4 inch expansion joints at radius points of curb returns for cross street intersections, or as located in adjacent pavement but no further than 80 feet apart. Use no boards shorter than 6 feet. When pavement is 24 feet or narrower, use not more than 2 lengths of board. Secure pieces to form straight joint. Shape board filler accurately to cross section of concrete slab. Use load transmission devices of type and size shown on Drawings unless otherwise specified or shown as "No Load Transfer Device." Seal with joint sealing compound.

3.04 CONTRACTION JOINTS

A. Place contraction joints at same locations as in adjacent pavement or at spaces indicated on Drawings. Place smoothed, painted and oiled dowels accurately and normal to joint. Seal groove with joint sealing compound.

3.05 LONGITUDINAL WEAKENED PLANE JOINTS

A. Place longitudinal weakened plane joints at spaces indicated on Drawings. If more than 15 feet in width is poured, longitudinal joint must be saw cut. Seal groove with joint sealing compound.

3.06 SAWED JOINTS

A. Use sawed joints as alternate to contraction and weakened plane joints. Use circular cutter capable of cutting straight line groove minimum of 1/4 inch wide. Maintain depth of one quarter of pavement thickness. Commence sawing as soon as concrete has hardened sufficiently to permit cutting without chipping, spalling or tearing and prior to initiation of cracks. Once sawing has commenced, continue until completed. Make saw cut with one pass. Complete sawing within 24 hours of concrete placement. Saw joints at required spacing consecutively in sequence of concrete placement.

B. Concrete Saw: Provide sawing equipment adequate in power to complete sawing to required dimensions and within required time. Maintain ample supply of saw blades at work site during sawing operations. Maintain sawing equipment on job during concrete placement.

7 JOINTS FOR CURB, CURB AND GUTTER

A. Place 3/4 inch preformed expansion joints through curb and gutters at locations of expansion and contraction joints in pavement, at end of radius returns at street intersections and driveways, and at curb inlets. Maximum spacing shall be 120-foot centers.

3.08 JOINTS FOR CONCRETE SIDEWALKS

A. Provide 3/4 inch expansion joints conforming to ASTM A 1751 along and across sidewalk at back of curbs, at intersections with driveways, steps, and walls; and across walk at intervals not to exceed 36 feet. Provide expansion joint material conforming to ASTM D 994 for small radius curves and around fire hydrants and utility poles. Extend expansion joint material full depth of slab.

3.9 JOINTS FOR CONCRETE DRIVEWAYS

A. Provide 3/4-inch expansion joints conforming to ASTM D 1751 across driveway in line with street face of sidewalks, at existing concrete driveways, and along intersections with sidewalks and other structures. Extend expansion joint material full depth of slab.

3.10 JOINT SEALING

A. Seal joints only when surface and joints are dry, ambient temperature is above 50 degrees F and less than 85 degrees F and weather is not foggy or rainy.

B. Use joint sealing equipment in like new working condition throughout joint sealing operation, and be approved by Project Manager. Use concrete grooving machine or power-operated wire brush and other equipment such as plow, brooms, brushes, blowers or hydro or abrasive cleaning as required to produce satisfactory joints.

C. Clean joints of loose scale, dirt, dust and curing compound. The term joint includes wide joint spaces, expansion joints, dummy groove joints or cracks, either preformed or natural. Remove loose material from concrete surfaces adjacent to joints.

D. Fill joints neatly with joint sealer to depth shown. Pour sufficient joint sealer into joints so that, upon completion, surface of sealer within joint will be 1/4 inch above level of adjacent surface or at elevation as directed.

3.11 PROTECTION

A. Maintain joints in good condition until completion of Work.

B. Replace damaged joints material with new material as required by this Section.

END OF SECTION

Item 467
Safety End Treatment

1. DESCRIPTION

Furnish, construct, and install safety end treatments for drainage structures, or install or replace pipe runners or pipe runner assemblies on existing drainage structures.

2. MATERIALS

2.1. **General.** Furnish materials in accordance with the following.

- Item 420, "Concrete Substructures"
- Item 421, "Hydraulic Cement Concrete"
- Item 432, "Riprap"
- Item 440, "Reinforcement for Concrete"
- Item 442, "Metal for Structures"
- Item 445, "Galvanizing"
- Item 460, "Corrugated Metal Pipe"
- Item 464, "Reinforced Concrete Pipe"

Use Class C concrete for cast-in-place and precast concrete units unless otherwise shown on the plans. Furnish cast-in-place or precast safety end treatments unless otherwise shown on the plans. Furnish Class B concrete for concrete riprap unless otherwise shown on the plans. Provide galvanized steel for prefabricated metal end sections in accordance with Item 460, "Corrugated Metal Pipe."

Furnish pipe runners in accordance with the following:

- ASTM A1085;
- ASTM A53, Type E or S, Grade B;
- ASTM A500, Grade B; or
- API 5L, Grade X42.

Furnish plates and angles in accordance with ASTM A36. Furnish nuts and bolts in accordance with ASTM A307. Galvanize pipes, plates, angles, nuts, and bolts in accordance with Item 445, "Galvanizing."

2.2. **Fabrication.** Fabricate cast-in-place concrete units and precast units in accordance with Item 420, "Concrete Substructures." Provide either prefabricated metal end sections or mitered CMP when specified for the pipe structure unless otherwise shown on the plans.

Provide one of the following when reinforced concrete pipe (RCP) is specified for the pipe structure, unless otherwise shown on the plans:

- mitered RCP or
- precast safety end treatment (SET) units. Provide riprap only if the plans specifically require it for this alternative.

2.2.1. **SET Types.**

2.2.1.1. **Type I.** Provide Type I SET consisting of reinforced concrete headwalls or wingwalls and pipe runners in accordance with the details shown on the plans when required.

2.2.1.2. **Type II**. Provide Type II SET in accordance with the details shown on the plans consisting of the following:

- CMP or RCP mitered to the proper slope, concrete riprap and pipe runners, when required;
- prefabricated metal end sections, concrete riprap and pipe runners, when required; or
- precast SET units, concrete riprap, when required, and pipe runners, when required.

2.2.2. **Lifting Holes**. Provide no more than 4 lifting holes in each section for precast units. Lifting holes may be cast, cut into fresh concrete after form removal, or drilled. Provide lifting holes large enough for adequate lifting devices based on the size and weight of the section. The maximum hole diameter is 3 in. at the inside surface of the wall and 4 in. at the outside surface. Cut no more than 1 longitudinal wire or 2 circumferential wires per layer of reinforcing steel when locating lift holes. Repair spalled areas around lifting holes.

2.2.3. **Marking**. Clearly mark the following on each precast unit, mitered CMP, mitered RCP, or metal end section before shipment from the casting or fabrication yard:

- the date of manufacture,
- the name or trademark of the manufacturer, and
- the type and size designation.

2.2.4. **Storage and Shipment**. Store precast units on a level surface. Do not place any loads on precast units until the design strength is reached. Do not ship units until design strength requirements have been met.

2.2.5. **Causes for Rejection**. Precast units may be rejected for not meeting any one of the specification requirements. Individual units may also be rejected for fractures or cracks passing through the wall or surface defects indicating honeycombed or open texture surfaces. Remove rejected units from the project and replace with acceptable units meeting the requirements of this Item.

2.2.6. **Defects and Repairs**. Occasional imperfections in manufacture or accidental damage sustained during handling may be repaired. The repaired units will be acceptable if they conform to the requirements of this Item and the repairs are sound and properly finished and cured in conformance with pertinent specifications. Repair damaged galvanizing in accordance with Section 445.3.5., "Repairs."

3. CONSTRUCTION

3.1. **General**. Remove portions of existing structures in accordance with Section 420.4.8., "Extending Existing Substructures." Drill, dowel, and grout in accordance with Item 420, "Concrete Substructures." Furnish concrete riprap in accordance with Item 432, "Riprap."

Provide riprap on all prefabricated metal end sections.

3.2. **Excavation, Shaping, Bedding, and Backfill**. Excavate, shape, bed, and backfill in accordance with Item 400, "Excavation and Backfill for Structures." Take special precautions in placing and compacting the backfill to avoid any movement or damage to the units. Bed precast units on foundations of firm and stable material accurately shaped to conform to the bases of the units.

3.3. **Placement of Precast Units**. Provide adequate means to lift and place the precast units. Fill lifting holes with mortar or concrete and cure. Precast concrete or mortar plugs may be used.

3.4. **Connections**. Make connections to new or existing structures in accordance with the details shown on the plans. Furnish jointing material in accordance with Item 464, "Reinforced Concrete Pipe."

Also remove a length of the existing pipe from the headwall to the joint when removing existing headwalls as shown on the plans or as approved. Re-lay the removed pipe if approved, or furnish and lay a length of new pipe.

3.5. **Install or Replace Pipe Runners or Assemblies**. Install or replace individual pipe runners or pipe runner assemblies on existing drainage structures as indicated on the plans.

4. MEASUREMENT

SETs of all types will be measured by each barrel of each structure end.

Pipe runners or pipe runner assemblies installed or replaced on existing structure will be measured by each installed or replaced on each structure end.

5. PAYMENT

The work performed and materials furnished in accordance with this Item and measured as provided under "Measurement" will be paid for at the unit price bid for the various designations of "Safety End Treatment" specified as follows:

- SET (Type I) (Barrel Span) (Wall Height) (Slope, Horizontal:Vertical) (Orientation, Cross or Parallel)
- SET (Type I) (Pipe Diameter or Design) (Slope, Horizontal:Vertical) (Orientation, Cross or Parallel)
- SET (Type II) (Pipe Diameter or Design) (Pipe Material) (Slope, Horizontal:Vertical) (Orientation, Cross or Parallel)
- SET (Pipe Runner)
- SET (Pipe Runner Assembly)

For payment purposes, the wingwall heights of Type I SETs for box culverts will be rounded to the nearest foot.

This price is full compensation for constructing, furnishing, transporting, and installing the end treatments; pipe runners, or pipe runner assemblies, connecting to existing structure; breaking back, removing and disposing of portions of the existing structure, removing and disposing of existng pipe runner or pipe runner assemblies, and replacing portions of the existing structure as required to make connections; excavation and backfill; furnishing concrete, reinforcing steel, corrugated metal pipe or reinforced concrete pipe, and pipe runners; and concrete riprap, nuts, bolts, plates, angles, equipment, labor, tools, and incidentals.

The removal and re-laying of existing pipe or the furnishing of new pipe to replace existing pipe will not be paid for directly but will be considered subsidiary to this Item.

The mitered length of CMP or RCP that is a part of the SET (Type II) will not be paid for directly but will be considered subsidiary to this Item. The limits for payment for pipe will be as shown on the plans and paid for in accordance with the pertinent bid item.

The limits of riprap to be included in the price bid for each SET will be shown on the plans. Any riprap placed beyond the limits shown will be paid in accordance with Item 432, "Riprap." Riprap between multiple precast SET units will be required as shown on the plans and is included in the price bid for SET.

When precast SETs are provided as an option to mitered RCP, riprap aprons will not be required unless the plans specifically require riprap aprons for precast SET units. The plans will show the limits of the riprap to be included with the precast SET for payment.

Texas Department of Transportation

SPECIAL SPECIFICATION

6834

Portable Changeable Message Sign

1. **Description.** Furnish, operate, and maintain portable trailer mounted changeable message sign (PCMS) units.

2. **Materials.** Furnish new or used material in accordance with the requirements of this Item and the details shown on the plans. Provide a self-contained PCMS unit with the following:

   - Sign controller
   - Changeable Message Sign
   - Trailer
   - Power source

   Paint the exterior surfaces of the power supply housing, supports, trailer, and sign with Federal Orange No. 22246 or Federal Yellow No. 13538 of Federal Standard 595b, except paint the sign face assembly flat black.

   A. **Minimum Luminance Requirements.** All PCMS units shall meet the following luminance requirements measured at the character level in candela as is published in Report 4940-2, "Photometric Requirements for Portable Changeable Message Signs," conducted by the Texas Transportation Institute. Luminance will be tested in accordance with Tex-880.

      - Minimum Daytime Character Luminance of 4000cd/m2 with a contrast ratio of 5.
      - Minimum Nighttime Character Luminance of 30/cd/m2.

   B. **Sign Controller.** Provide a controller with permanent storage of a minimum of 75 pre-programmed messages. Provide an external input device for random programming and storage of a minimum of 75 additional messages. Provide a controller capable of displaying up to 3 messages sequentially. Provide a controller with adjustable display rates. Enclose sign controller equipment in a lockable enclosure.

   C. **Changeable Message Sign.** Provide a sign capable of being elevated to at least 7 ft. above the roadway surface from the bottom of the sign. Provide a sign capable of being rotated 360° and secured against movement in any position.

      Provide a sign with 3 separate lines of text and 8 characters per line minimum. Provide a minimum 78 in. high x 126 in. wide sign housing. Provide a minimum 18 in. character height. Provide a 5 x 7 character pixel matrix. Provide a message visibility distance of 750 ft. Provide for manual and automatic dimming light sources.

      The following are descriptions for 3 screen types of PCMS:

- **Character Modular Matrix.** This screen type comprises of character blocks.
- **Continuous Line Matrix.** This screen type uses proportionally spaced fonts for each line of text.
- **Full Matrix.** This screen type uses proportionally spaced fonts, varies the height of characters, and displays simple graphics on the entire sign.

D. Trailer. Provide a 2 wheel trailer with square top fenders, 4 leveling jacks, and trailer lights. Do not exceed an overall trailer width of 96 in. Shock mount the electronics and sign assembly.

E. Power Source. Provide a diesel generator, solar powered power source, or both. Provide a backup power source as necessary.

F. Cellular Telephone. When shown on the plans, provide a cellular telephone connection to communicate with the PCMS unit remotely.

3. Construction. Place or relocate PCMS units as shown on the plans or as directed. The plans will show the number of PCMS units needed, for how many days, and for which construction phases.

Maintain the PCMS units in good working condition. Repair damaged or malfunctioning PCMS units as soon as possible. PCMS units will remain the property of the Contractor.

4. Measurement. This Item will be measured by each PCMS or by the day used. All PCMS units shall be set up on a work area and operational before a calendar day can be considered measurable. When measurement by the day is specified, a day shall be measured for each PCMS set up and operational on the worksite.

5. Payment. The work performed and materials furnished in accordance with this Item and measured as provided under "Measurement" will be paid for at the unit price bid for "Portable Changeable Message Sign." This price is full compensation for PCMS units; set up; relocating; removing; replacement parts; batteries (when required); fuel, oil, and oil filters (when required); cellular telephone charges (when required); software; and equipment, materials, tools, labor, and incidentals.

CENTERPOINT ENERGY
SPECIFICATIONS

SPECIFICATION

FOR

INSTALLATION OF CONDUIT SYSTEM FOR THOROUGHFARE STREET LIGHTING

CenterPoint Energy
Distribution Engineering
P.O. Box 1700
Houston, Texas 77251

REFERENCE DRAWINGS:
004-237-16 Revision 4

REFERENCE STANDARDS:

NO.	DATE	ITEMS REVISED	BY	CH	APP
5	7-25-07	Revised for practical application	KTN	JCD	MMG
4	2-23-99	Added conduit run for high density area	KTN	JCD	LHH

CenterPoint Energy HOUSTON, TEXAS				
WRITTEN	9-13-90	N.T. Khanh		
CHECKED	9-13-90	JCD / RKM		
APPROVED	9-14-90	Robert Boucher		
Sheet 1 of 16				
SPEC ID.		007	371	08

Table of Contents

Item No.	Title	Page No.
1.0	SCOPE	3
2.0	GENERAL	3
3.0	Material furnished by CNP	4
4.0	Pull-Box	5
5.0	Warning tape	5
6.0	Material furnished by the Customer	5
7.0	Conduits	6
8.0	Conduit install in bridge or elevated roadway	7
9.0	Conduit plugs	7
10.0	Liability	8
	Small Pull-Box	9
	Large Pull-Box	10
	Typical street light conduit layout	11
	Multiple conduit run street light foundation	12
	Street light conduit from manhole	13
	Typical terminal pole layout	14
	Conduits installed in bridge or elevation roadway	15
	Block-out for street light in concrete area	16

1.0 SCOPE

This Specification covers CenterPoint Energy (CNP) requirements concerning the installation of pull-boxes and conduits for underground electrical service to street lights. Number, size and direction of conduits to be specified on layout at CNP's discretion. Where there is a conflict between this specification and the CNP project drawing, the drawing will take precedence.

2.0 GENERAL

The following sub-articles state the general procedures to be followed for coordination of conduit system installation:

2.1 For City/County Contractor installed conduit: City/County Street Light Division shall approve proposed street light locations. City/County shall forward proposed locations to CNP. CNP shall design the conduit system and return design to City/County for contracting.

2.2 For Metro Contractor installed conduit: Metro shall forward construction drawings to COH Street Light Division for proposed street light locations. COH shall submit their approved locations to CNP. CNP shall design the conduit system and return design to COH. (For conduit to be located in utility or side lot easements, CNP will perform the work in conjunction with street light installation, with reimbursement from Metro).

2.3 CNP shall require, and note on drawings, when pull-boxes are required at the beginning and ending of each continuous conduit run, in addition to those areas where pull-boxes are currently required for crossings or distance.

2.4 CNP Street Light Engineering shall attend City/County/Metro utility coordinating meeting prior to the start of construction. The proposed conduit installation (as well as potential conflicts with existing CNP facilities) will be reviewed at that time.

2.5 In conjunction with the utility coordinating meeting, Contractor, CNP representative, Metro (if applicable) and City/County or other municipal representative shall review proposed light locations in the field.

2.6 Contractor will notify CNP Street Light Engineering, at least 2 (two) working days in advance, of Contractor's schedule for conduit installation. CNP Street Light Engineering will perform final inspections with Contractor present when all conduits had been installed.

2.7 Contractor shall attempt to determine if existing underground utilities or any other obstructions would prohibit CNP's installation of proposed new street lights. If such obstructions exist, Contractor may revise the proposed location of the light up to 5 feet in any direction within street right-of-way in order to avoid obstructions. For revised street light locations greater than 5 feet in any direction, Contractor must obtain prior approval as follows:

For projects being performed for City/County, Contractor shall notify the City Inspector, who will notify the City/County 's Public Works Department. Public Works will review the problem with the City's Street Light Division and CNP for approval of any changes. (In the case of municipalities other than City/County, Contractor shall notify City Inspector who shall notify appropriate Department of City. City shall consult with CNP for approval of any changes)

For projects being performed for Metro, Contractor must notify the Metro Inspector, who will in turn contact Metro's Utility Coordination Section. The Utility Coordination Section will review the problem with the COH's Street Light Division (or other municipality if applicable) and CNP for approval of any changes.

2.8 For <u>any</u> contractor-proposed changes to CNP's conduit system design, Contractor must obtain prior approval from CNP. Contractor shall first notify City/County or Metro Inspector of requested changes, who will in turn notify City/County Public Works, other municipality or Metro's Utility Coordination Section. City/County Public Works, other municipality or Metro Utility Coordination will review the requested changes with CNP for approval.

2.9 For proposed street lights on bridges or elevated roads, Contractor shall design and install foundations that meet the loading requirements of CNP Specification for Galvanized Street Light Standards 007-371-04. For information on pull-boxes and conduit, see Article 8.0.

3.0 MATERIAL FURNISHED BY CNP

CNP shall only furnish the pull-boxes (see Article 4.0) and the warning tape (see Article 5.0). Pull-boxes will not be furnished for installation on bridges or elevated roads.

3.1 The Customer's Contractor shall notify CNP Street Light Engineering when pull-boxes and warning tape are required, seven working days in advance of planned pick-up. Pull-boxes and tape can be obtained Tuesday through Friday, excluding holidays, from the South Houston Complex-Building D, located at 4500 South Shaver, Houston, Texas, 77034.

3.2 After Contractor's notification, CNP will provide Contractor with a work order number for reference when picking up materials at the South Houston Complex-Building D.

4.0 PULL-BOX

The following sub-articles state the general requirements for pull-boxes:

4.1 The pull-boxes shall be furnished by CNP and shall be installed by the Customer's Contractor as a part of the conduit system.

4.2 Pull-boxes shall be installed in accordance with sheet 9 & 10 of this specification. The conduit layout will specify the type of pull-box to be installed.

4.3 At the point of entrance to the pull-box, the conduits shall always have a minimum ground cover as noted on pull-box drawing. Conduit shall run up a maximum of 5 inches into the pull-box. The bends to be used with the pull-box shall have a minimum radius as shown on pull-box drawing.

5.0 WARNING TAPE

5.1 Warning tape shall be furnished by CNP and installed by the Customer's Contractor (see sheet 11).

5.2 Warning tape shall be installed approximately 12 inches above the street light conduit.

6.0 MATERIAL FURNISHED BY THE CUSTOMER

The Customer or Customer's Contractor shall furnish the conduits (see Article 7.0), the conduits and pull-boxes installed in bridges or elevated roadways (see Artical 8.0), the conduit plugs (see Article 9.0), and all other materials not furnished by CNP.

7.0 CONDUIT

The following sub-articles state the general requirements, unless specifically stated otherwise on the layout, for the number, size and installation of the conduit system from the pull-box to the street light or terminal pole.

7.1 Conduit shall be PVC Nema Tc2 Schedule 40 or Schedule 80, U.L. label, US trade size, and meet the standards of the National Electrical Code (NEC). Size to be determined by layout.

7.2 A No. 14 Aluminum or Copper wire, and a fiber pulling cord of at least 1200 pounds breaking strength shall be installed in the conduit.
Pulling cord shall be installed in such a manner as to provide adequate access and be free to pull without hindrance. Pulling cord shall not be glued or permanently attached to conduit in any manner. The pulling cord and wire shall beviewable from outside the end of conduit run.

7.3 The conduit runs shall be made "continuous" with all sections connected from beginning to end, including the conduit crossing the street. Stub-out will be required at all conduit end and street light locations (see drawing #004-237-16).

7.4 The conduit shall be placed 3 feet behind curb unless sidewalk is to be installed. Where sidewalks exist, conduit shall be placed up to 6 inches behind the sidewalk (or in grassy area between the curb and the start of sidewalk, where 12 inches or more of grassy area exists) (see sheet 12). Even though sidewalks exist, CNP will install street light approximately 3 feet back of curb. City/County/Metro Contractor shall design a block-out area for the street light installation in concrete area (see sheet 16).

7.5 The conduit shall have a minimum cover of <u>36 inches from final grade</u> except as noted on pull-box and manhole drawing, or where city, county or state regulators require a greater depth, and shall consist of PVC conduit.

7.6 For the burial of street light conduits crossing under driveways or sidewalks, schedule 40 PVC or better is required. When crossing under streets, the conduit shall be PVC conduit schedule 80.

7.7 For terminal pole source locations specified on the layout, the bend of the conduits at the terminal pole shall be 90 degrees, 24 inch radius bend, schedule 40 PVC conduit. This bend shall be brought to the face of the pole and stubbed out approximately 12 inches above the final grade (see sheet 14).

7.8 For pad mounted transformer source locations specified on the layout, conduit shall be brought to within 1 foot of transformer pad, opposite the small notch "V" on the pad, stubbed out approximately 12 inches above the final grade.

7.9 For secondary pedestal source locations specified on the layout, conduit shall be brought to within 1 foot of pedestal and stubbed out approximately 12 inches above the final grade.

7.10 For manhole source location, the conduit shall enter the manhole a minimum of 12 inches from the inside ceiling or as specified on the layout. A ductbell terminator will be installed in the manhole wall for conduit termination. CNP shall be notified 48 hours prior to the actual coring of the manhole wall so that CNP can verify the location in each manhole to be penetrated. CNP will stand-by only during the actual coring. The contractor shall do the coring and installation of the ductbell terminator. The contractor shall seal around the ductbell terminator with packaged, dry, rapid hardening cementitious material conforming to ASTM C928-80 specifications, to ensure a water

tight seal.

8.0 CONDUIT INSTALLED IN BRIDGE OR ELEVATED ROADWAY

Customer or Customer's Contractor shall be responsible for designing, furnishing and installing the conduits and pull-boxes. The pull-boxes should be located to provide CNP personnel safe and reasonable access, without using ladders or other special equipment, for cable installation, inspection and maintenance. Where there are junction-boxes in addition to the pull-boxes, reasonable access shall also be provided.

8.1 The conduit shall be at least 2 inches, in diameter and meet all requirements of the latest National Electrical Code (NEC) and National Electrical Safety Code (NESC).

8.2 The conduits shall run to each street light location. The conduits shall be arranged to allow the source conductor to be pulled in and out of each street light location or Contractor shall provide junction-boxes on main conduit run at each street light location and run tap conduit to the street light location (see sheet 15 for examples of conduit runs).

8.3 A #14 Aluminium or Copper wire, and a fiber pulling cord of at least 1200 pound breaking strength shall be installed in the conduit.

A toning wire and pulling cord shall be installed in such a manner as to provide adequate access and be free to pull without hindrance. Pulling cord shall not be glued or permanently attached to conduit in any manner. The wire and pulling cord shall be attached and viewable outside the end of conduit run.

8.4 The pull-boxes used to pull the main circuit cable through the conduit system shall have a minimum opening of 15" x 15" x 12".

8.5 Junction boxes used as tap location shall meet all requirements of the latest NEC.

9.0 CONDUIT PLUGS

Plugs shall be installed on all conduit terminator points at the time the conduits are installed, to prevent blockage, until the cable is installed.

10.0 LIABILITY

10.1 Upon completion of the conduit installation, the Customer (or Customer's Contractor) shall forward to CNP Street Light Engineering notification in writing from a City or County Inspector that the installation meets CNP Specifications. In addition, Customer shall provide CNP with as-built drawings (showing conduits, pull-box, blockout, etc.).

10.2 The Customer shall be responsible for either: (1) correcting any violations of said Specifications and clearing any blockage or repairing any breaks within the street light conduits prior to street lights and circuit installation by CNP, or (2) reimbursing CNP for correcting violation.

10.3 Upon installation of street lights, with the exception of street lights on bridges or elevated roadways, CNP shall furnish, install, own, and at all times have complete control over said street light service conduit system and shall be responsible for the location and maintenance thereof. Maintenance of conduit systems on bridges or elevated roadways will be the Customer's responsibility.

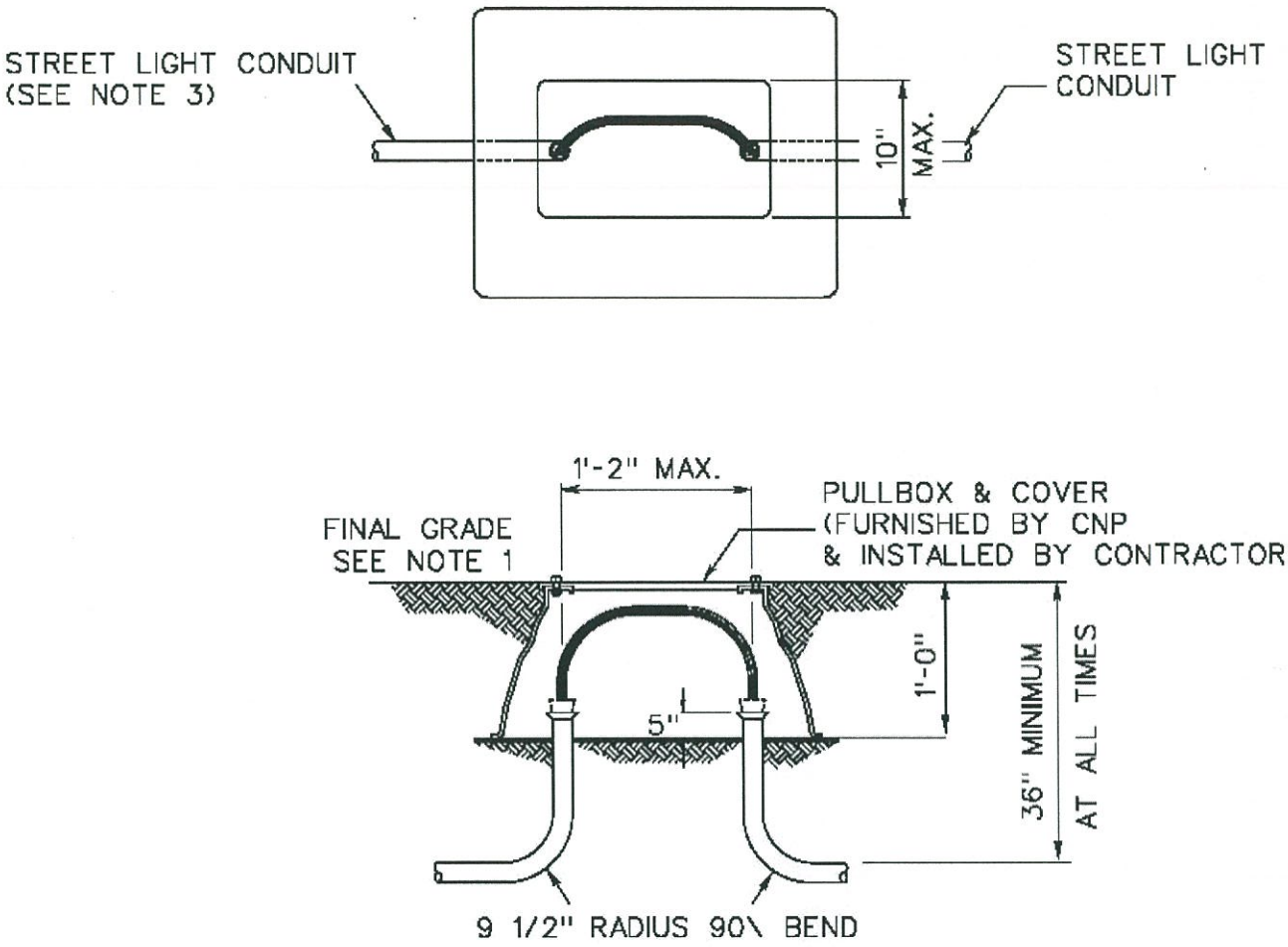

SMALL PULL BOX

NOTES:

1. GRADE AT TIME OF INSTALLATION SHALL BE CONSIDERD DEVELOPER'S FINAL GRADE.
2. THE SMALL CONCRETE PULL-BOX CAN BE INSTALLED IN DRIVEWAYS AND PARKING LOTS BUT NOT IN STREET.
3. THE NUMBER, SIZE AND DIRECTION OF CONDUITS TO BE SPECIFIED ON CNP CONDUIT LAYOUT.

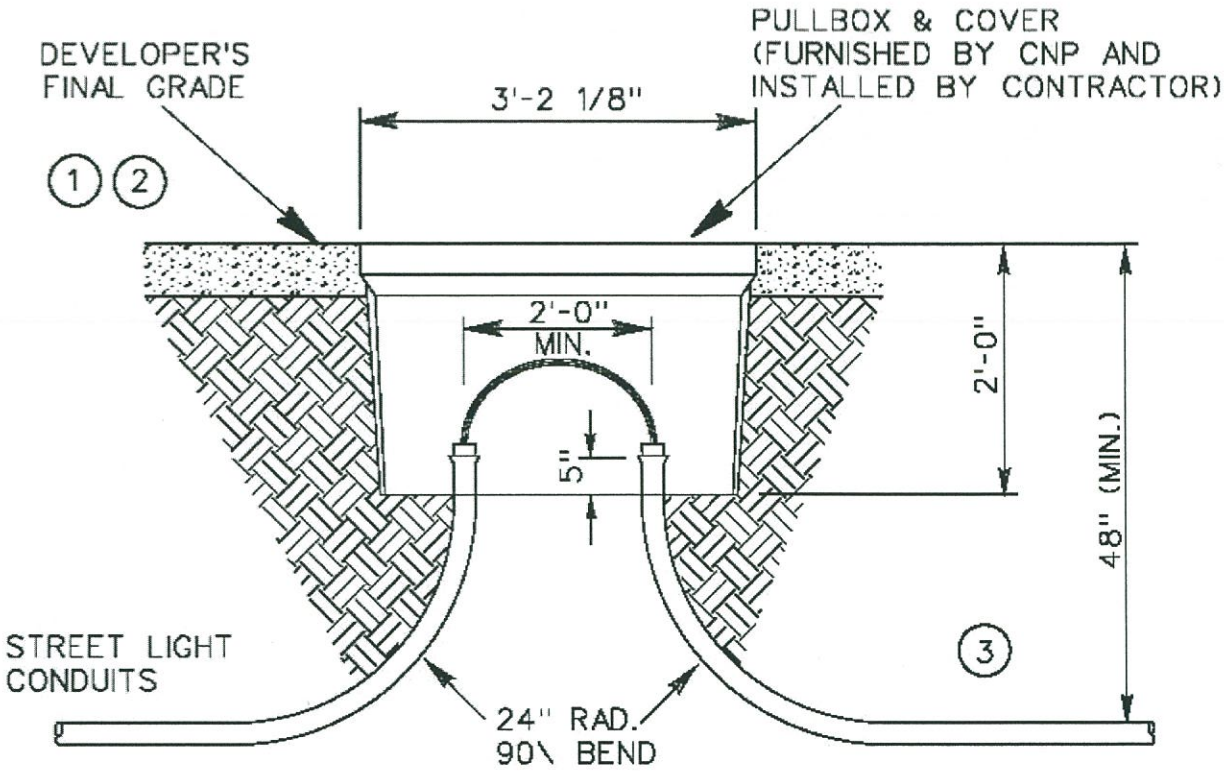

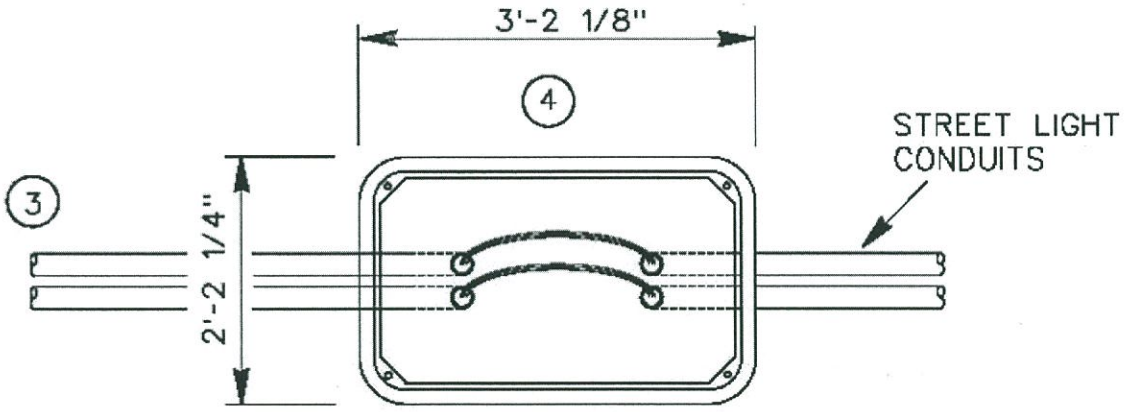

LARGE PULL BOX

1. GRADE AT TIME OF INSTALLATION SHALL BE CONSIDERED DEVELOPER'S FINAL GRADE.
2. WHEN INSTALLING PULL BOXES IN INCIDENTAL TRAFFIC LOADING AREA, DEVELOPER'S FINAL GRADE REFERS TO THE SURFACE OF THE PAVEMENT.
3. THE NUMBER, SIZE AND DIRECTION OF CONDUITS TO BE SPECIFIED ON CNP CONDUIT LAYOUT.
4. THIS PULL-BOX CAN BE INSTALLED IN DRIVEWAYS AND PARKING LOTS BUT NOT IN STREET.

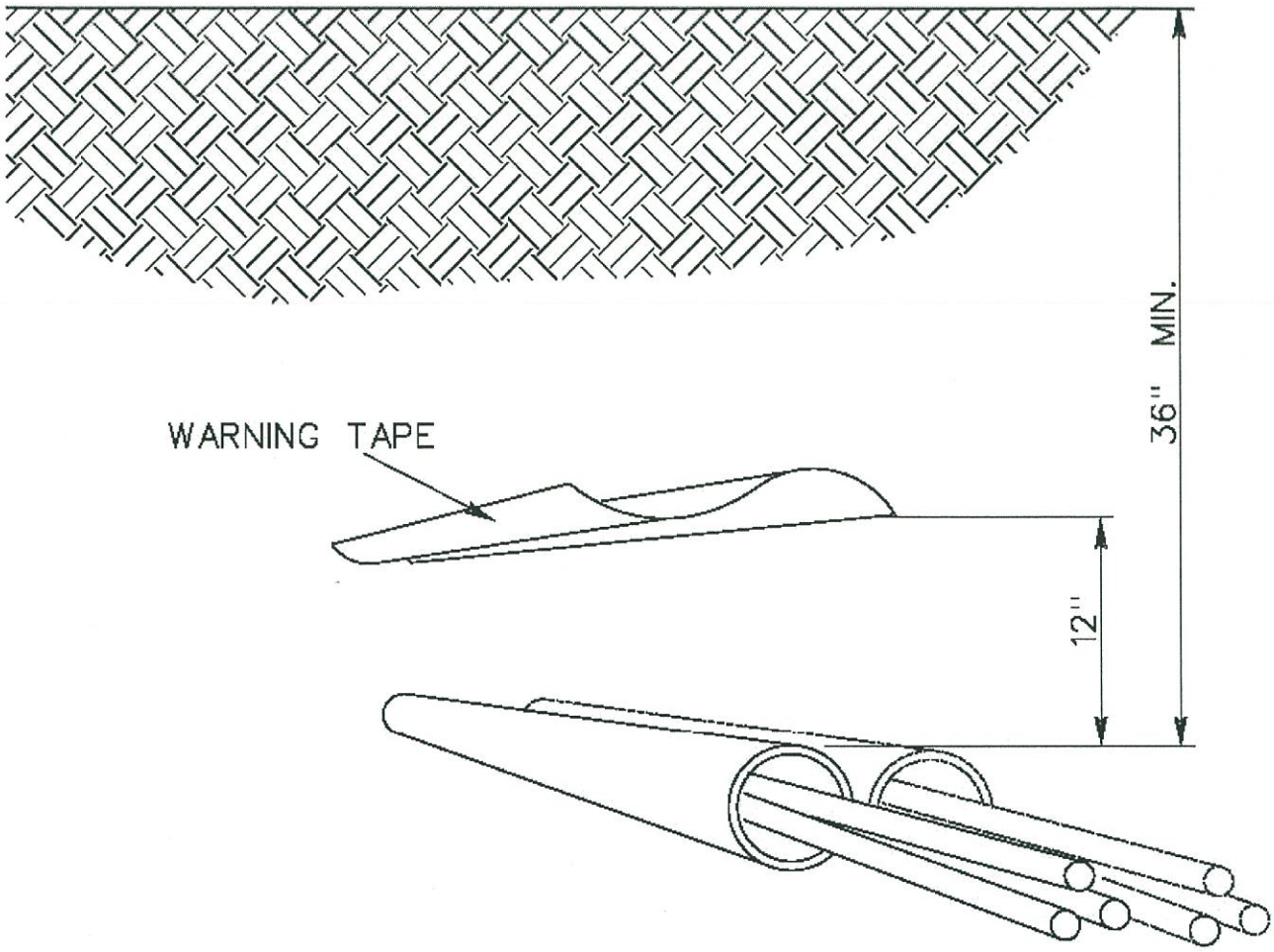

TYPICAL STREET LIGHT CONDUIT LAYOUT

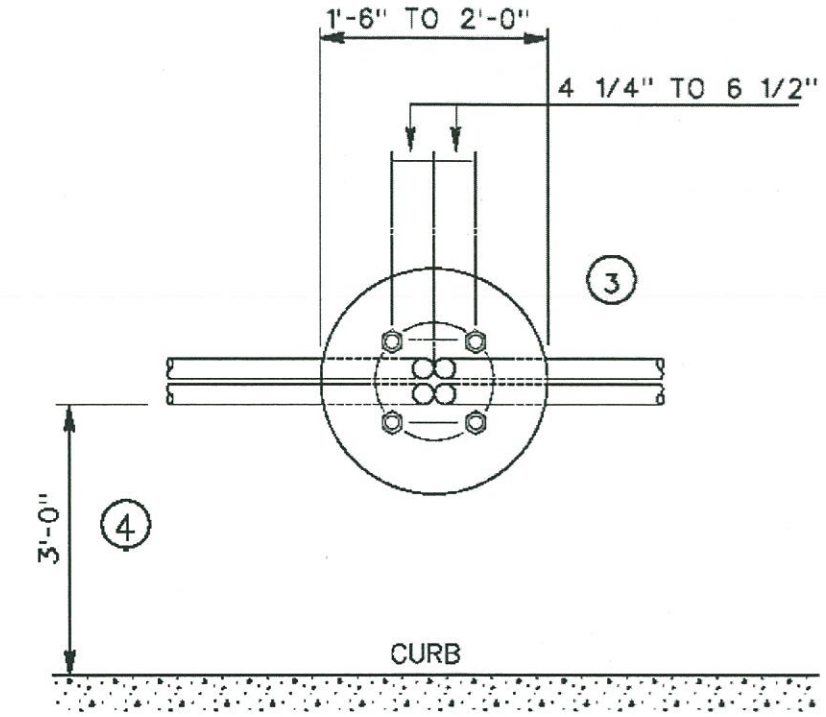

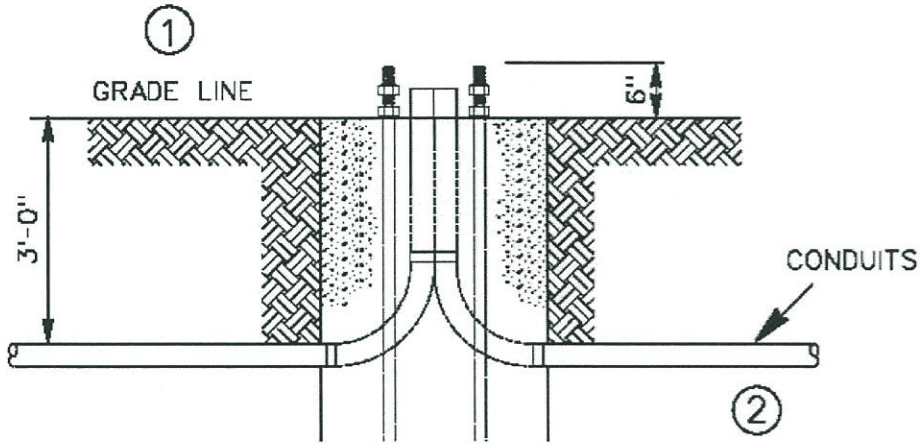

MULTIPLE CONDUIT RUN IN STREET LIGHT FOUNDATION

1. GRADE AT TIME OF INSTALLATION SHALL BE CONSIDERED DEVELOPER'S FINAL GRADE.
2. THE QUANTITY, SIZE AND DIRECTION OF CONDUITS TO BE SPECIFIED BY ENGINEERING DEPARTMENT.
3. SEE ACCOMPANING CNP STANDARDS FOUNDATION FOR ACTUAL SIZE AND ANCHOR BOLT POSITION.
4. CNP STANDARD LOCATION OF STREET LIGHT IS 3' BEHIND THE 6" CURB, UNLESS SPECIFIED DIFFERENTLY BY CITY / COUNTY / METRO.

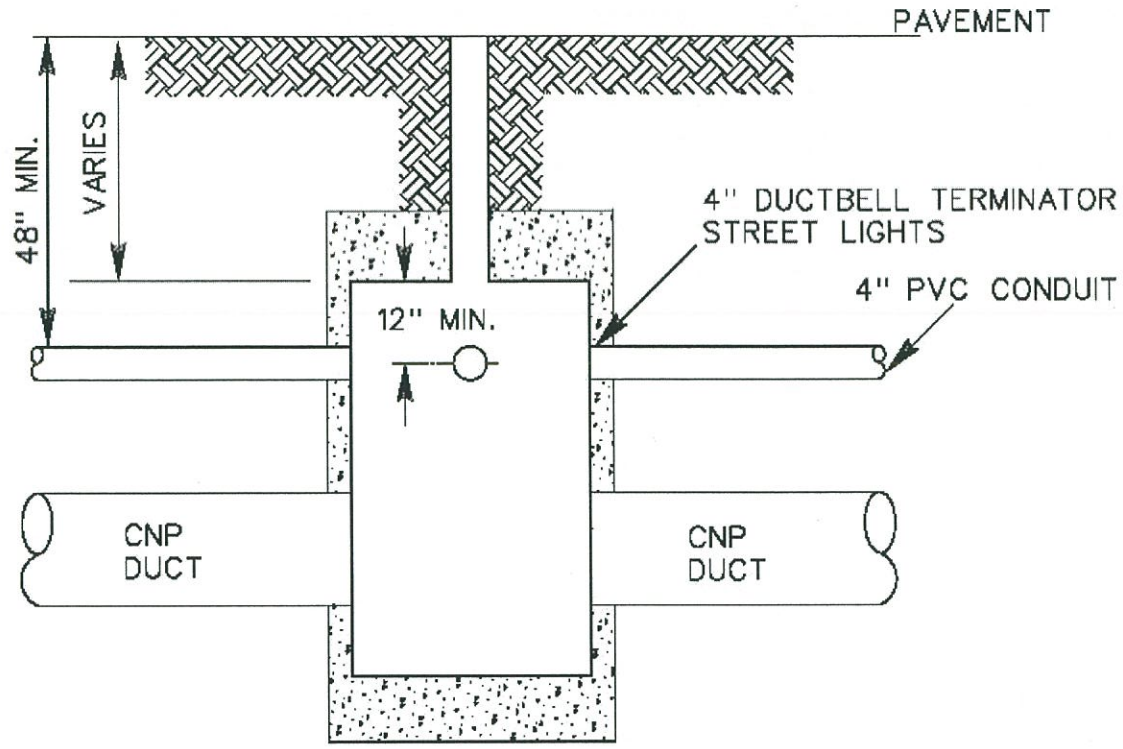

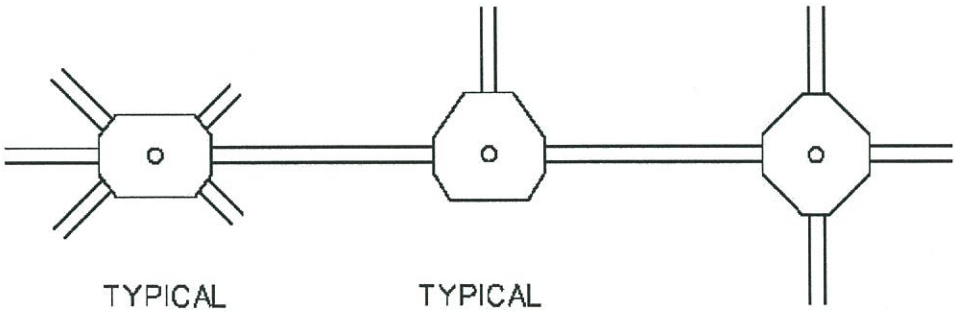

STREET LIGHT CONDUIT RUN FROM MANHOLE

① CONDUITS SHALL TYPICALLY ENTER THE MANHOLE THROUGH THE SHORT WALLS. CNP MUST APPROVE ENTRY THROUGH OTHER WALLS.

② THE NUMBER, SIZE AND DIRECTION OF CONDUITS TO BE SPECIFIED BY ENGINEERING DEPARTMENT.

③ CNP TO BE NOTIFIED 48 HOURS PRIOR TO THE ACTUAL CORING TO THE MANHOLE WALL.

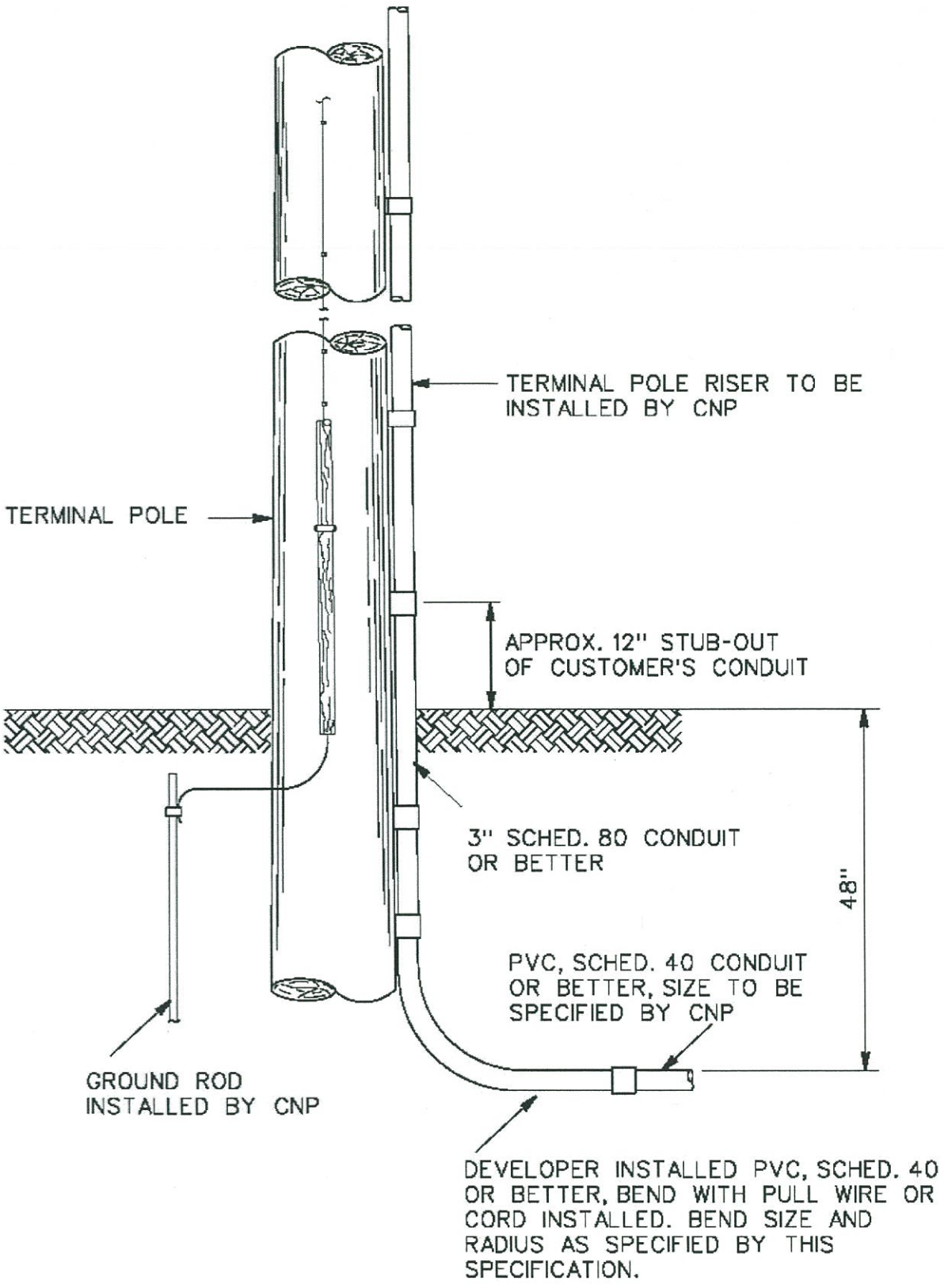

TYPICAL TERMINAL POLE LAYOUT

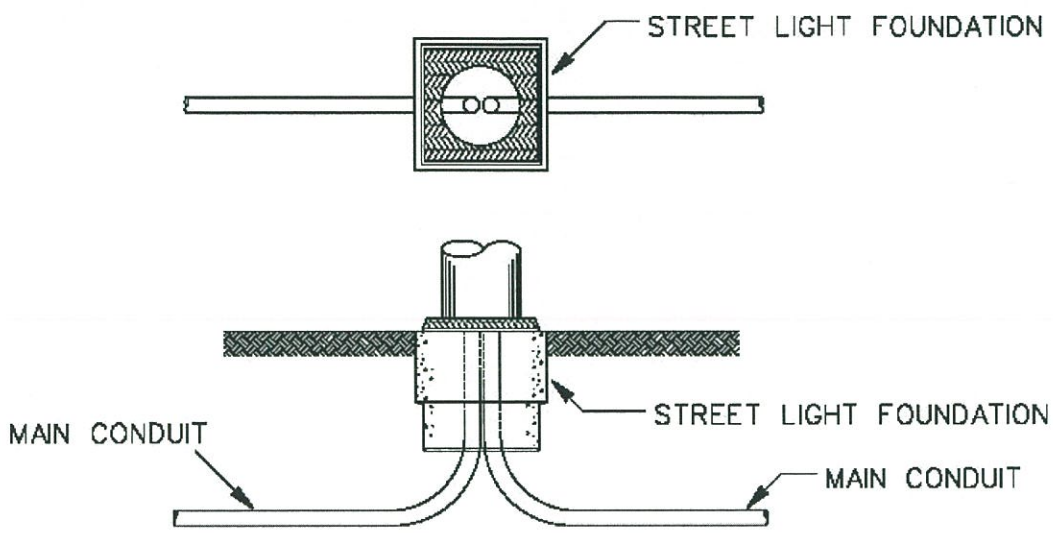

MAIN CONDUIT INSTALLED TO EACH STREET LIGHT
(SOURCE WIRE PULLED TO EACH LOCATION)

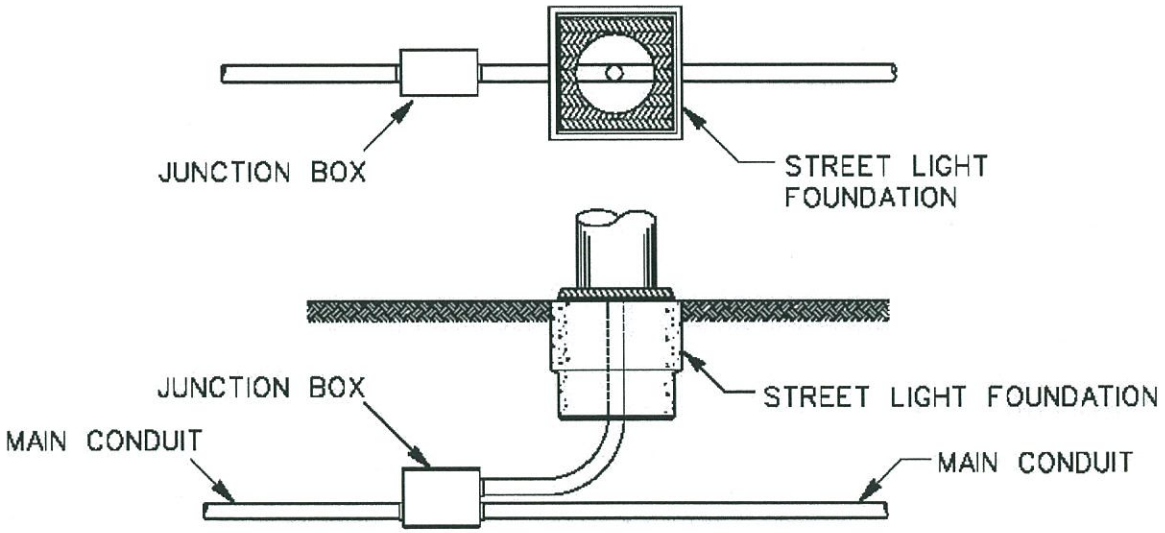

MAIN CONDUIT WITH TAPS FEEDING EACH LOCATION

NOTE:
ALL MATERIAL INSTALLED IN BRIDGE OR ELEVATED ROADWAY CONSTRUCTION SHALL BE FURNISHED BY CUSTOMER.

CONDUIT INSTALLED IN BRIDGE OR ELEVATED ROADWAY

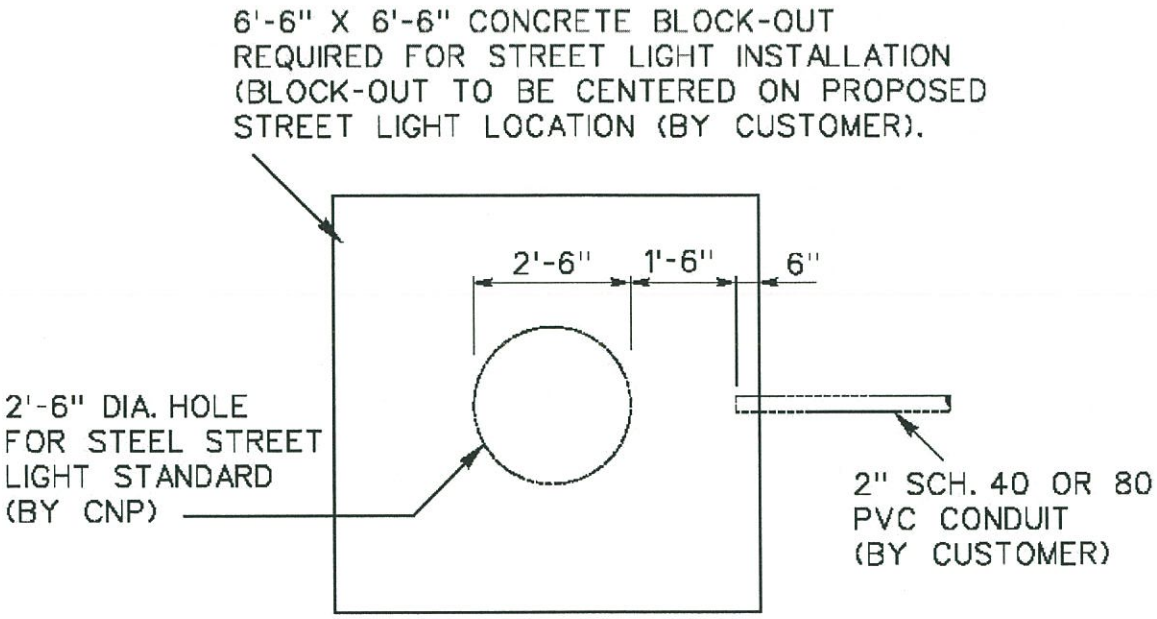

STREET LIGHT @ END OF CIRCUIT

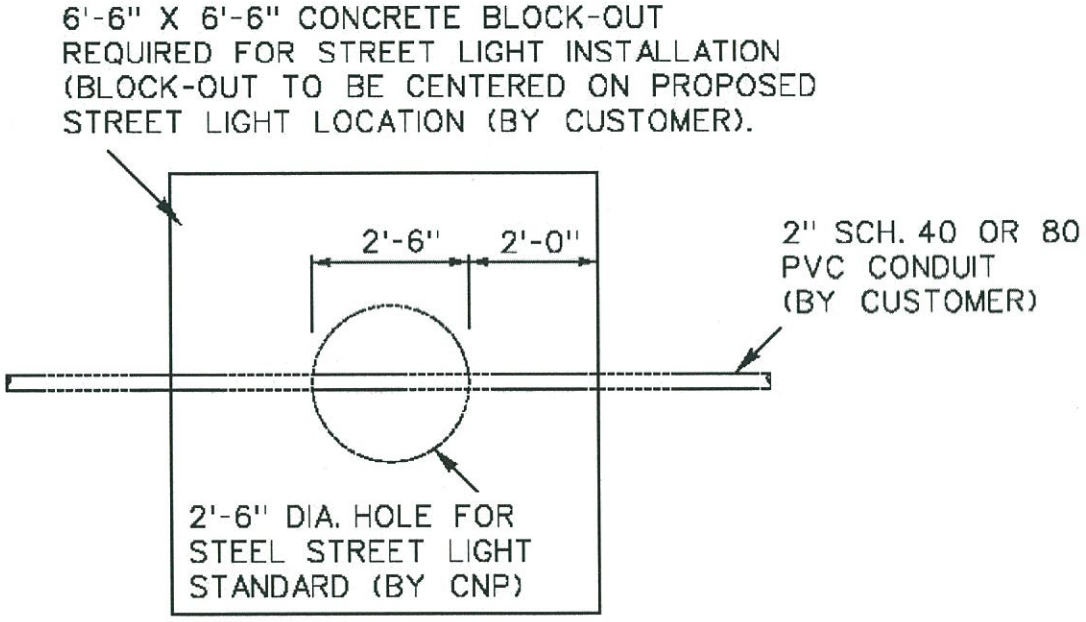

STREET LIGHT @ CONTINUOUS CIRCUIT

BLOCK-OUT DETAIL FOR STREET LIGHTS LOCATED IN CONCRETE AREAS