**CITY OF HOUSTON**
**DEPARTMENT OF PUBLIC WORKS AND ENGINEERING**
**ENGINEERING AND CONSTRUCTION DIVISION**

# PROJECT MANUAL
# BUFFALO SPEEDWAY PAVING AND DRAINAGE
# FROM WEST AIRPORT BOULEVARD TO HOLMES ROAD
# WBS No. N-000784-0001-4

**VOLUME 1 of 1**

Divisions 00 through 16

JULY 2014

**CLR, Inc.**
**Tx Firm Reg. No. 275**
**Engineers/Surveyors/GIS**
**19530 FM 362**
**Waller, Texas 77484**
**713-462-0993**

**CITY OF HOUSTON**
**DEPARTMENT OF PUBLIC WORKS AND ENGINEERING**
**ENGINEERING AND CONSTRUCTION DIVISION**

# PROJECT MANUAL
# BUFFALO SPEEDWAY PAVING AND DRAINAGE
# FROM WEST AIRPORT BOULEVARD TO HOLMES ROAD
# WBS No. N-000784-0001-4

**VOLUME 1 of 1**

Divisions 00 through 16

JULY 2014


**CLR, Inc.**
**Tx Firm Reg. No. 275**
**Engineers/Surveyors/GIS**
**19530 FM 362**
**Waller, Texas 77484**
**713-462-0993**


STATE OF TEXAS
KYLE A. BERTRAND
84575
LICENSED
PROFESSIONAL ENGINEER
7/3/14

Document 00010

# TABLE OF CONTENTS

NOTE: Bold capitalized Specification Sections are included in the City of Houston Department of Public Works and Engineering Standard Construction Specifications for Wastewater Collection Systems, Water Lines, Storm Drainage, Street Paving, and Traffic located here: **http://documents.publicworks.houstontx.gov/document-center/cat_view/88-engineering-and-construction/92-specifications/208-division-02-16-standard-specifications.html**; and are incorporated in Project Manuals by reference as if copied verbatim. Documents listed "for filing" are to be provided by Bidder and are not included in this Project Manual unless indicated for example only. The Document numbers and titles hold places for actual documents to be submitted by Contractor during Bid, post-bid, or construction phase of the Project. Specification Sections marked with an asterisk (*) are amended by a supplemental specification, printed on blue paper and placed in front of the Specification it amends. Documents in the 200, 300 and 400 series of Division 00, except for Document 00410B – Bid Form, Part B, are not part of the Contract.

**Doc. No.** **Document Title** **Doc. Date**

## INTRODUCTORY INFORMATION

00010 Table of Contents ..... 05-16-2014
00015 List of Drawings ..... 02-01-2004
00041 List of Pre-qualified Asbestos & Lead Abatement Contractors ..... 03-21-2012
00042 List of Designated Subcontractors and Suppliers ..... 02-01-2004

## BIDDING REQUIREMENTS

INSTRUCTIONS TO BIDDERS
00200 Instructions to Bidders ..... 03-01-2014
00210 Supplementary Instructions to Bidders ..... 07-01-2013
00220 Request for Bid Information ..... 06-11-2004

INFORMATION AVAILABLE TO BIDDERS
00320 Geotechnical Information ..... 09-02-2005
00340 Environmental Information ..... 09-14-2005

BID FORMS AND SUPPLEMENTS
00410 Bid Form, Parts A & B ..... 08-01-2013
00430 Bidder's Bond (For filing; Example Form) ..... 02-01-2004
00450 Bidder's Statement of MWBE/PDBE/DBE/SBE Status ..... 07-01-2013
00452 Contractor Submission List - Fair Campaign Ordinance ..... 04-30-2004
00453 Bidder's Statement of Residency ..... 02-01-2004
00454 Affidavit of Non-interest ..... 02-01-2004
00455 Affidavit of Ownership or Control ..... 09-04-2007

| Doc. No. | Document Title | Doc. Date |
|---|---|---|
| 00456 | Bidder's Certificate of Compliance with Buy American Program | 02-01-2004 |
| 00457 | Conflict of Interest Questionnaire | 02-28-2006 |
| 00458 | Bidder's Certificate Regarding Foreign Trade Restriction | 02-01-2004 |
| 00459 | Contractor's Statement Regarding Previous Contracts Subject to EEO | 02-01-2004 |
| 00460 | (POP-1) Pay or Play Acknowledgement Form | 07-03-2012 |
| 00470 | Bidder's MWSBE Participation Plan | 08-01-2013 |
| 00471 | Pre-bid Good Faith Efforts | 07-01-2013 |
| 00472 | Bidder's Goal Deviation Request | 07-01-2013 |

POST-BID PROCEDURES

| | | |
|---|---|---|
| 00495 | Post-bid Procedures | 08-01-2013 |

**CONTRACTING REQUIREMENTS**

AGREEMENT

| | | |
|---|---|---|
| 00500 | Form of Business | 02-01-2004 |
| 00501 | Resolution of Contractor | 02-01-2010 |
| 00520 | Agreement | 07-01-2013 |
| 00570 | Contractor's Revised MWSBE Participation Plan | 08-01-2013 |
| 00571 | Record of Post-Award Good Faith Efforts | 08-01-2013 |
| 00572 | Contractor's Request for Plan Deviation | 08-01-2013 |

BONDS AND CERTIFICATES

| | | |
|---|---|---|
| 00600 | List of Proposed Subcontractors and Suppliers | 07-01-2013 |
| 00601 | Drug Policy Compliance Agreement | 02-01-2004 |
| 00602 | Contractor's Drug Free Workplace Policy (For filing) | |
| 00604 | History of OSHA Actions and List of On-the-job Injuries | 02-01-2004 |
| 00605 | List of Safety Impact Positions | 02-01-2004 |
| 00606 | Contractor's Certification of No Safety Impact Positions | 02-01-2004 |
| 00607 | Certification Regarding Debarment, Suspension, and Other Responsibility Matters | 02-01-2004 |
| 00610 | Performance Bond | 05-17-2005 |
| 00611 | Statutory Payment Bond | 05-17-2005 |
| 00612 | One-year Maintenance Bond | 05-17-2005 |
| 00613 | One-year Surface Correction Bond | 05-17-2005 |
| 00620 | Affidavit of Insurance (with attached Certificates of Insurance) | 02-01-2004 |
| 00622 | Name and Qualifications of Proposed Superintendent (For filing) | |
| 00623 | Contractor's Act of Assurance (SRF Form ED-103) | 02-01-2004 |
| 00624 | Affidavit of Compliance with Affirmative Action Program | 02-01-2004 |
| 00630 | (POP-2) Certification of Compliance with Pay or Play Program | 07-03-2012 |
| 00631 | (POP-3) City of Houston Pay or Play Program – List of Subcontractors | 07-03-2012 |
| 00633 | Equal Employment Opportunity–Certification By Material Suppliers | 02-01-2010 |
| 00642 | Monthly Subcontractor Payment Reporting Form | 02-01-2010 |

| Doc. No. | Document Title | Doc. Date |
|---|---|---|
| 00646 | Payment Notification Explanation of Withholding | 02-01-2010 |
| GENERAL CONDITIONS | | |
| 00700 | General Conditions | 11-01-2014 |
| SUPPLEMENTARY CONDITIONS | | |
| 00800 | Supplementary Conditions | 11-01-2014 |
| 00808 | Requirements for the City of Houston Program for Minority, Women, and Small Business Enterprises (MWSBE), and Persons with Disabilities Business Enterprises (PDBE) Program | 08-01-2013 |
| 00820 | Wage Scale for Engineering Construction | 02-01-2014 |
| 00830 | Trench Safety Geotechnical Information | 02-01-2004 |
| 00840 | Pay or Play Program Requirements | 07-03-2012 |
| ADDENDA AND MODIFICATIONS | | |
| 00910 | Addendum | 02-01-2004 |
| 00911 | Notice of Addendum | 02-01-2004 |
| 00931 | Request for Information | 02-01-2004 |

| Doc. No. | Document Title | Doc. Date |
|---|---|---|
| | **SPECIFICATIONS** | |
| **DIVISION 1 - GENERAL REQUIREMENTS** | | |
| 01110 | Summary of Work | 06-27-2005 |
| 01145 | Use of Premises | 01-01-2011 |
| 01255 | Change Order Procedures | 08-01-2003 |
| 01270 | Measurement and Payment | 08-01-2003 |
| 01292 | Schedule of Values | 08-01-2003 |
| 01312 | Coordination and Meetings | 08-01-2003 |
| 01321 | Construction Photographs | 08-01-2003 |
| 01325 | Construction Schedule | 08-01-2003 |
| 01326 | Construction Schedule (Bar Chart) | 08-01-2003 |
| 01330 | Submittal Procedures | 08-01-2003 |
| 01340 | Shop Drawings, Product Data, and Samples | 08-01-2003 |
| 01351 | Environmental Safety and Worker Protection | 01-01-2011 |
| 01410 | TPDES Requirements (with Attachments) | 02-01-2011 |
| 01422 | Reference Standards | 08-01-2003 |
| 01450 | Contractor's Quality Control | 08-01-2003 |
| 01452 | Inspection Services | 08-01-2003 |
| 01454 | Testing Laboratory Services | 08-01-2003 |
| 01502 | Mobilization | 08-01-2008 |
| 01504 | Temporary Facilities and Controls | 01-01-2011 |
| 01506 | Diversion Pumping | 08-01-2003 |
| 01520 | Temporary Field Office | 02-08-2012 |
| 01554 | Traffic Control and Street Signs | 07-01-2012 |
| 01555 | Traffic Control and Regulation | 01-01-2011 |
| 01562 | Tree and Plant Protection | 01-01-2011 |
| 01570 | Storm Water Pollution Control | 01-26-2012 |
| 01575 | Stabilized Construction Access | 02-01-2011 |
| 01576 | Waste Material Disposal | 08-01-2003 |
| 01578 | Control of Ground and Surface Water | 01-01-2011 |
| 01580 | Project Identification Signs | 08-01-2003 |
| 01581 | Excavation in Public Way Permit Signs | 08-01-2003 |
| 01610 | Basic Product Requirements | 01-01-2011 |
| 01630 | Product Substitution Procedures | 08-01-2003 |
| 01725 | Field Surveying | 01-01-2011 |
| 01731 | Cutting and Patching | 01-01-2011 |
| 01732 | Procedure for Water Valve Assistance (with Attachments) | 08-01-2003 |
| 01740 | Site Restoration | 08-01-2003 |
| 01755 | Starting Systems | 08-01-2003 |
| 01770 | Closeout Procedures | 08-01-2003 |
| 01782 | Operations and Maintenance Data | 08-01-2003 |
| 01785 | Project Record Documents | 08-01-2003 |

| Doc. No. | Document Title | Doc. Date |
|---|---|---|
| DIVISION 2 - SITE WORK | | |
| 02081 | CAST-IN-PLACE CONCRETE MANHOLES | 01-01-2011 |
| 02082 | PRECAST CONCRETE MANHOLES | 01-01-2011 |
| 02083 | FIBERGLASS MANHOLES | 01-01-2011 |
| 02084 | FRAMES, GRATES, RINGS, AND COVERS | 08-01-2008 |
| 02085 | VALVE BOXES, METER BOXES, AND METER VAULTS | 01-01-2011 |
| 02086 | ADJUSTING MANHOLES, INLETS, AND VALVE BOXES TO GRADE | 01-01-2011 |
| 02087 | BRICK MANHOLE FOR STORM SEWERS | 10-01-2002 |
| 02136 | WASTE MATERIAL HANDLING, TESTING AND DISPOSAL | 01-01-2011 |
| 02201 | SITE PREPARATION, GRADING, RESTORATION AND CLEAN UP FOR WATER STORAGE TANKS | 01-01-2011 |
| 02221 | REMOVING EXISTING PAVEMENTS AND STRUCTURES | 07-01-2009 |
| 02222 | ABANDONMENT OF SEWERS | 01-01-2011 |
| 02233 | CLEARING AND GRUBBING | 01-01-2011 |
| 02260 | TRENCH SAFETY SYSTEM | 02-01-2011 |
| 02315 | ROADWAY EXCAVATION | 07-01-2009 |
| 02316 | EXCAVATION AND BACKFILL FOR STRUCTURES | 01-01-2011 |
| 02317 | EXCAVATION AND BACKFILL FOR UTILITIES | 01-01-2011 |
| 02318 | EXTRA UNIT PRICE WORK FOR EXCAVATION AND BACKFILL | 01-01-2011 |
| 02319 | BORROW | 01-01-2011 |
| 02320 | UTILITY BACKFILL MATERIALS | 01-01-2011 |
| 02321 | CEMENT STABILIZED SAND | 01-01-2011 |
| 02322 | FLOWABLE FILL | 08-01-2008 |
| 02330 | EMBANKMENT | 10-01-2002 |
| 02336 | LIME-STABILIZED SUBGRADE | 10-01-2002 |
| 02337 | LIME/FLY-ASH STABILIZED SUBGRADE | 10-01-2002 |
| 02338 | PORTLAND CEMENT STABILIZED SUBGRADE | 10-01-2002 |
| 02340 | COMPACTED SANDFILL UNDER TANK FLOOR PLATE | 01-01-2011 |
| 02400 | TUNNEL SHAFTS | 01-01-2011 |
| 02401 | COMMON TUNNEL SHAFTS | 01-01-2011 |
| 02425 | TUNNEL EXCAVATION AND PRIMARY LINER | 10-01-2002 |
| 02426 | SEWER LINE IN TUNNELS | 10-01-2002 |
| 02427 | PLASTIC LINER FOR LARGE-DIAMETER CONCRETE SEWERS AND STRUCTURES | 10-01-2002 |
| 02431 | TUNNEL GROUT | 10-01-2002 |
| 02441 | MICROTUNNELING AND PIPE-JACKED TUNNELS | 01-01-2011 |
| 02447 | AUGERING PIPE AND CONDUIT | 10-01-2002 |
| 02448 | PIPE AND CASING AUGERING FOR SEWERS | 10-01-2002 |
| 02465 | DRILLED SHAFT FOUNDATIONS | 10-01-2002 |
| 02476 | CAISSON FOR LIFT STATION | 01-01-2011 |
| 02501 | DUCTILE IRON PIPE AND FITTINGS | 02-01-2011 |

| Doc. No. | Document Title | Doc. Date |
|---|---|---|
| 02502 | STEEL PIPE AND FITTINGS | 01-01-2011 |
| 02503 | COPPER TUBING | 10-01-2002 |
| 02504 | CENTRIFUGALLY CAST FIBERGLASS PIPE | 02-01-2011 |
| 02505 | HIGH DENSITY POLYETHYLENE (HDPE) SOLID AND PROFILE WALL PIPE | 02-01-2011 |
| 02506 | POLYVINYL CHLORIDE PIPE | 01-01-2011 |
| 02507 | PRESTRESSED CONCRETE CYLINDER PIPE | 01-01-2011 |
| 02508 | EXTRA STRENGTH CLAY PIPE | 02-01-2011 |
| 02509 | FIBERGLASS REINFORCED PIPE FOR PRESSURE MAINS | 01-01-2011 |
| 02511 | WATER LINES | 01-01-2011 |
| 02512 | WATER TAP AND SERVICE LINE INSTALLATION | 04-27-2012 |
| 02513 | WET CONNECTIONS | 10-01-2002 |
| 02514 | DISINFECTION OF WATER LINES | 01-01-2011 |
| 02515 | HYDROSTATIC TESTING OF PIPELINES | 01-01-2011 |
| 02516 | CUT, PLUG, AND ABANDONMENT OF WATER LINES | 01-01-2011 |
| 02517 | WATER LINE IN TUNNELS | 10-01-2002 |
| 02518 | STEEL PIPE AND FITTINGS FOR LARGE-DIAMETER WATER LINES | 01-01-2011 |
| 02520 | FIRE HYDRANTS | 05-05-2011 |
| 02521 | GATE VALVES | 01-01-2011 |
| 02522 | BUTTERFLY VALVES | 01-01-2011 |
| 02523 | PRESSURE REDUCING VALVES | 10-01-2002 |
| 02524 | AIR RELEASE AND VACUUM RELIEF VALVES | 01-01-2011 |
| 02525 | TAPPING SLEEVES AND VALVES | 01-01-2011 |
| 02526 | WATER METERS | 01-01-2011 |
| 02527 | POLYURETHANE COATINGS ON STEEL OR DUCTILE IRON PIPE | 10-01-2002 |
| 02528 | POLYETHYLENE WRAP | 01-01-2011 |
| 02531 | GRAVITY SANITARY SEWERS | 01-01-2011 |
| 02532 | SANITARY SEWER FORCE MAINS | 01-01-2011 |
| 02533 | ACCEPTANCE TESTING FOR SANITARY SEWERS | 01-01-2011 |
| 02534 | SANITARY SEWER SERVICE STUBS OR RECONNECTIONS | 01-01-2011 |
| 02550 | SLIPLINING SANITARY SEWERS | 01-01-2011 |
| 02553 | POINT REPAIR AND OBSTRUCTION REMOVALS | 01-01-2011 |
| 02555 | MANHOLE REHABILITATION | 01-01-2011 |
| 02557 | FOLDED AND FORMED PIPE | 01-01-2011 |
| 02558 | CLEANING AND TELEVISION INSPECTION | 01-01-2011 |
| 02571 | CRUSHING SANITARY SEWERS | 01-01-2011 |
| 02581 | STREET LIGHTING CONDUIT | 10-01-2002 |
| 02582 | TRAFFIC SIGNAL POLE ASSEMBLIES | 07-01-2009 |
| 02611 | REINFORCED CONCRETE PIPE | 02-01-2011 |
| 02612 | PRECAST REINFORCED CONCRETE BOX SEWERS | 10-01-2002 |
| 02613 | BAR WRAPPED STEEL CYLINDER PIPE | 01-01-2011 |
| 02621 | GEOTEXTILE | 10-01-2002 |

| Doc. No. | Document Title | Doc. Date |
|---|---|---|
| 02631 | STORM SEWERS | 01-26-2012 |
| 02632 | CAST-IN-PLACE INLETS, HEADWALLS, AND WINGWALLS | 10-01-2002 |
| 02633 | PRECAST CONCRETE INLETS, HEADWALLS, AND WINGWALLS | 10-01-2002 |
| 02642 | CORRUGATED METAL PIPE | 10-01-2002 |
| 02643 | PLATE CULVERT STRUCTURES | 10-01-2002 |
| 02662 | PIPING, VALVES, FITTINGS, AND ACCESSORIES FOR WATER STORAGE TANKS | 01-01-2011 |
| 02711 | HOT MIX ASPHALT BASE COURSE | 07-01-2009 |
| 02712 | CEMENT STABILIZED BASE COURSE | 10-01-2002 |
| 02713 | RECYCLED CRUSHED CONCRETE BASE COURSE | 07-01-2009 |
| 02714 | FLEXIBLE BASE COURSE FOR TEMPORARY DRIVEWAYS | 07-01-2009 |
| 02741 | ASPHALTIC CONCRETE PAVEMENT | 07-01-2009 |
| 02742 | PRIME COAT | 10-01-2002 |
| 02743 | TACK COAT | 10-01-2002 |
| 02751 | CONCRETE PAVING | 07-01-2009 |
| *02752S* | *Concrete Pavement Joints* | *12-29-2009* |
| *02752 | CONCRETE PAVEMENT JOINTS | 10-01-2002 |
| 02753 | CONCRETE PAVEMENT CURING | 10-01-2002 |
| 02754 | CONCRETE DRIVEWAYS | 09-01-2002 |
| 02761 | COLORED CONCRETE FOR MEDIANS AND SIDEWALKS | 09-01-2002 |
| 02762 | BLAST CLEANING OF PAVEMENT | 10-01-2002 |
| 02764 | RAISED PAVEMENT MARKERS | 07-01-2012 |
| 02765 | TEMPORARY AND REMOVABLE REFLECTORIZED PAVEMENT MARKINGS | 07-01-2012 |
| 02767 | THERMOPLASTIC PAVEMENT MARKINGS | 07-01-2012 |
| 02771 | CURB, CURB AND GUTTER, AND HEADERS | 10-01-2002 |
| 02772 | CONCRETE MEDIANS AND DIRECTIONAL ISLANDS | 10-01-2002 |
| 02775 | CONCRETE SIDEWALKS | 10-01-2002 |
| 02811 | LANDSCAPE IRRIGATION | 10-01-2002 |
| 02893 | TRAFFIC SIGNAL CONSTRUCTION | 07-01-2009 |
| 02911 | TOPSOIL | 10-01-2002 |
| 02912 | TREE, PLANT, AND HARDSCAPE PROTECTION | 07-01-2009 |
| 02915 | TREE PLANTING | 01-01-2011 |
| 02921 | HYDROMULCH SEEDING | 01-01-2011 |
| 02922 | SODDING | 07-01-2009 |
| 02951 | PAVEMENT REPAIR AND RESTORATION | 07-01-2009 |
| 02960 | MILLING PAVEMENT | 07-01-2009 |
| 02983 | REMOVAL AND RESTORATION OF BRICK-PAVED STREETS | 10-01-2002 |

DIVISION 3 - CONCRETE

| | | |
|---|---|---|
| 03315 | CONCRETE FOR UTILITY CONSTRUCTION | 10-01-2002 |

| Doc. No. | Document Title | Doc. Date |
|---|---|---|
| DIVISION 4 - MORTAR | | |
| 04061 | MORTAR | 10-01-2002 |
| 04210 | BRICK MASONRY FOR UTILITY CONSTRUCTION | 10-01-2002 |
| DIVISION 5 - METALS | | |
| 05501 | METAL FABRICATIONS | 01-01-2011 |
| DIVISION 6 - WOOD AND PLASTICS | | |
| DIVISION 7 - THERMAL AND MOISTURE PROTECTION | | |
| DIVISION 8 - DOORS AND WINDOWS | | |
| DIVISION 9 - FINISHES | | |
| 09901 | PROTECTIVE COATINGS | 01-01-2011 |
| 09971 | HIGH BUILD GLAZED COATINGS | 01-01-2011 |
| DIVISION 10 - SPECIALTIES | | |
| DIVISION 11 – EQUIPMENT | | |
| DIVISION 12 - FURNISHINGS | | |
| DIVISION 13 - SPECIAL CONSTRUCTION | | |
| 13111 | CATHODIC PROTECTION FOR WATER TANK INTERIORS | 01-01-2011 |
| 13112 | CATHODIC PROTECTION FOR WATER TANK INTERIORS(ICCP) | 01-01-2011 |
| 13113 | CATHODIC PROTECTION FOR NEW TANK BOTTOMS | 01-01-2011 |
| 13201 | WELDED STEEL WATER STORAGE TANKS | 01-01-2011 |
| 13202 | REHABILITATION OF WELDED STEEL WATER STORAGE TANKS | 01-01-2011 |
| 13203 | TANK CLEAN-UP AND DISINFECTION | 01-01-2011 |
| DIVISION 14 - CONVEYING SYSTEMS | | |
| DIVISION 15 – MECHANICAL | | |
| 15640 | JOINT BONDING AND ELECTRICAL ISOLATION | 01-01-2011 |
| 15641 | CORROSION CONTROL TEST STATIONS | 01-01-2011 |
| DIVISION 16 – ELECTRICAL | | |
| 16010 | BASIC ELECTRICAL REQUIREMENTS | 01-01-2011 |
| 16640 | CATHODIC PROTECTION FOR PIPELINES | 01-01-2011 |

| Doc. No. | Document Title | Doc. Date |
|---|---|---|
| 16641 | CATHODIC PROTECTION FOR EXISTING TANK BOTTOM | 01-01-2011 |
| 16642 | CATHODIC PROTECTION FOR PIPE LINE | 01-01-2011 |
| 16644 | CATHODIC PROTECTION FOR CLARIFIERS | 01-01-2011 |
| 16645 | CATHODIC PROTECTION FOR NEW TANK BOTTOMS | 01-01-2011 |
| 16709 | COMMUNICATIONS CONDUIT | 07-01-2012 |
| 16710 | PULL BOXES | 07-01-2009 |
| 16711 | TRAFFIC SIGNAL CONDUIT | 07-01-2009 |
| 16712 | SOLAR POWERED SCHOOL ZONE FIELD EQUIPMENT | 07-01-2012 |
| 16713 | PRE-FORMED LOOPS | 07-01-2012 |
| 16715 | VEHICLE SIGNAL HEADS | 07-01-2009 |
| 16716 | PEDESTRIAN SIGNAL HEADS | 07-01-2009 |
| 16717 | PROGRAMMABLE VEHICLE SIGNAL HEADS | 07-01-2009 |
| 16718 | LED VEHICLE TRAFFIC SIGNAL MODULE | 07-01-2009 |
| 16719 | COUNTDOWN PEDESTRIAN SIGNAL MODULE | 07-01-2009 |
| 16720 | TRAFFIC SIGNAL CABLE | 07-01-2009 |
| 16724 | EMERGENCY VEHICLE PREEMPTION (EVP) | 07-01-2009 |
| 16725 | DYNAMIC MESSAGE SIGN | 07-01-2012 |
| 16730 | ITS CONTROLLER CABINET ASSEMBLY | 07-01-2012 |
| 16731 | MODEL 2070 CONTROLLER UNIT | 07-01-2009 |
| 16732 | UNINTERRUPTIBLE POWER SUPPLY (UPS) SYSTEM FOR TRAFFIC SIGNAL CABINETS | 07-01-2012 |
| 16733 | MANAGED FIELD HARDENED ETHERNET SWITCH | 07-01-2012 |
| 16734 | WIMAX | 07-01-2012 |
| 16735 | FIBER OPTIC SPLICE ENCLOSURE | 07-01-2012 |
| 16736 | FIBER DISTRIBUTION UNIT | 07-01-2009 |
| 16737 | COMMUNICATION SERVICE BOX | 07-01-2012 |
| 16738 | WIRELESS COMMUNICATION SYSTEM | 07-01-2009 |
| 16739 | BLUETOOTH SPECIFICATION | 07-01-2012 |
| 16740 | SINGLE MODE FIBER OPTIC COMMUNICATION SYSTEM | 07-01-2012 |
| 16742 | VIDEO DETECTION SYSTEMS | 07-01-2009 |
| 16743 | CDMA MODEM ASSEMBLY | 07-01-2009 |
| 16744 | ETHERNET VIDEO MPEG-4 ENCODER | 07-01-2012 |
| 16745 | ETHERNET VIDEO MPEG-4 DECODER | 07-01-2012 |
| 16746 | VIDEO MANAGEMENT SOFTWARE | 07-01-2012 |
| 16747 | PERMANENT COUNT STATION | 07-01-2012 |
| 16748 | SYSTEM INTEGRATION | 07-01-2012 |
| 16750 | ACCESSIBLE PEDESTRIAN PUSH BUTTON STATION | 07-01-2009 |
| 16780 | CCTV FIELD EQUIPMENT | 07-01-2012 |
| 16785 | GPS SERIAL COMMUNICATIONS | 07-01-2012 |

| | | |
|---|---|---|
| HCFCD 02314 | FILL MATERIAL | 08-31-2005 |
| HCFCD 02315 | EXCAVATING AND BACKFILL | 08-31-2005 |
| HCFCD 02378 | RIPRAP AND GRANULAR FILL | 08-31-2005 |

| Doc. No. | Document Title | Doc. Date |
|---|---|---|
| | **APPENDIX A – STORMWATER POLLUTION PREVENTION PLAN** | |
| | **APPENDIX B – TCEQ NOI & NOT** | |

END OF DOCUMENT

Document 00015

LIST OF DRAWINGS

| Sheet No. | Drawing Title |
|---|---|
| 1 | Cover Sheet |
| 2 | Index Sheet |
| 3 | General Notes |
| 4 | Legend, Abbreviations and Flood Insurance Rate Map |
| 5 | Overall Layout |
| 6 | Survey Control Map 1 of 6 |
| 7 | Survey Control Map 2 of 6 |
| 8 | Survey Control Map 3 of 6 |
| 9 | Survey Control Map 4 of 6 |
| 10 | Survey Control Map 5 of 6 |
| 11 | Survey Control Map 6 of 6 |
| 12 | COH Monument Swing Ties 1 of 2 |
| 13 | COH Monument Swing Ties 2 of 2 |
| 14 | Control Point Swing Ties 1 of 5 |
| 15 | Control Point Swing Ties 2 of 5 |
| 16 | Control Point Swing Ties 3 of 5 |
| 17 | Control Point Swing Ties 4 of 5 |
| 18 | Control Point Swing Ties 5 of 5 |
| 19 | Overall Drainage System Map |
| 20 | Overall Drainage Area Map 100-yr (1 of 2) |
| 21 | Overall Drainage Area Map 100-yr (2 of 2) |
| 22 | Overall Drainage Area Map 2-yr (1 of 2) |
| 23 | Overall Drainage Area Map 2-yr (2 of 2) |
| 24 | Drainage Area Map 1 of 6 |
| 25 | Drainage Area Map 2 of 6 |
| 26 | Drainage Area Map 3 of 6 |
| 27 | Drainage Area Map 4 of 6 |
| 28 | Drainage Area Map 5 of 6 |
| 29 | Drainage Area Map 6 of 6 |
| 30 | Houston Storm Sewer Computations 1 of 4 |
| 31 | Houston Storm Sewer Computations 2 of 4 |
| 32 | Houston Storm Sewer Computations 3 of 4 |
| 33 | Houston Storm Sewer Computations 4 of 4 |
| 34 | Typical Roadway Sections |

| | |
|---|---|
| 35 | Plan and Profile – Buffalo Speedway – Sta. Begin To 112+00 |
| 36 | Plan and Profile – Buffalo Speedway – Sta. 112+00 to 116+00 |
| 37 | Plan and Profile – Buffalo Speedway – Sta. 116+00 to 121+00 |
| 38 | Plan and Profile – Buffalo Speedway – Sta. 121+00 to 126+00 |
| 39 | Plan and Profile – Buffalo Speedway – Sta. 126+00 to 130+50 |
| 40 | Plan and Profile – Buffalo Speedway – Sta. 130+50 to 135+00 |
| 41 | Plan and Profile – Buffalo Speedway – Sta. 135+00 to 139+50 |
| 42 | Plan and Profile – Buffalo Speedway – Sta. 139+50 to 144+00 |
| 43 | Plan and Profile – Buffalo Speedway – Sta. 144+00 to 149+00 |
| 44A | Plan – Buffalo Speedway – Sta. 149+00 to 154+00 |
| 44B | Profile – Buffalo Speedway – Sta. 149+00 to 154+00 |
| 45 | Plan and Profile – Buffalo Speedway – Sta. 154+00 to 159+00 |
| 46 | Plan and Profile – Buffalo Speedway – Sta. 159+00 to 164+00 |
| 47 | Plan and Profile – Buffalo Speedway – Sta. 164+00 to 169+00 |
| 48 | Plan and Profile – Buffalo Speedway – Sta. 169+00 to 174+00 |
| 49 | Plan and Profile – Buffalo Speedway – Sta. 174+00 to 179+00 |
| 50 | Plan and Profile – Buffalo Speedway – Sta. 179+00 to 184+00 |
| 51 | Plan and Profile – Buffalo Speedway – Sta. 184+00 to 189+00 |
| 52 | Plan and Profile – Buffalo Speedway – Sta. 189+00 to 194+00 |
| 53 | Plan and Profile – Buffalo Speedway – Sta. 194+00 to 198+00 |
| 54 | Plan and Profile – Buffalo Speedway – Sta. 198+00 to End |
| 55 | Plan and Profile – Connector – Sta. 0+00 to 4+50 |
| 56 | Plan and Profile – Connector – Sta. 4+50 to 9+50 |
| 57 | Plan and Profile – Connector – Sta. 9+50 to 14+50 |
| 58 | Plan and Profile – Holmes Road – Sta. 302+00 TO 306+50 |
| 59 | Plan and Profile – Holmes Road – Sta. 306+50 to 311+00 |
| 60 | Plan and Profile – Holmes Road – Sta. 311+00 to 314+00 |
| 61 | Buffalo Speedway/W. Airport Blvd Intersection Grading Plan |
| 62 | Buffalo Speedway Roundabout Grading Plan |
| 63 | Plan and Profile – Outfall Ditch A – Sta. 400+00 to 405+00 |
| 64 | Plan and Profile – Outfall Ditch A – Sta. 405+00 to 408+00 |
| 65 | Plan and Profile – Outfall Ditch A – Sta. 408+00 to 413+00 |
| 66 | Plan and Profile – Outfall Ditch B – Sta. 500+00 to 505+00 |
| 67 | Plan and Profile – Outfall Ditch B – Sta. 505+00 to 510+00 |
| 68 | Plan and Profile – Outfall Ditch B – Sta. 510+00 to 514+50 |
| 69 | Plan and Profile – Outfall Ditch B – Sta. 514+50 to 518+00 |
| 70 | Plan and Profile – Outfall Ditch B – Sta. 518+00 to 521+35 |
| 71 | Plan and Profile – Outfall Ditch C – Sta. 600+00 to 604+50 |
| 72 | Plan and Profile – Outfall Ditch C – Sta. 604+50 to 607+00 |
| 73 | Plan and Profile – Outfall Ditch C – Sta. 607+00 to 611+50 |
| 74 | Plan and Profile – Outfall Ditch C – Sta. 611+50 to 614+00 |

| | |
|---|---|
| 75 | Plan and Profile – Outfall Ditch C – Sta. 614+00 to 618+00 |
| 76 | Plan and Profile – Outfall Ditch C – Sta. 618+00 to 622+50 |
| 77 | Plan and Profile – Outfall Ditch C – Sta. 622.50 to 628+00 |
| 78 | Plan and Profile – Outfall Ditch D – Sta. 700+00 to 705+00 |
| 79 | Plan and Profile – Outfall Ditch D – Sta. 705+00 to 710+00 |
| 80 | Plan and Profile – Outfall Ditch D – Sta. 710+00 to 715+00 |
| 81 | Plan and Profile – Outfall Ditch D – Sta. 715+00 to 720+00 |
| 82 | Plan and Profile – Outfall Ditch D – Sta. 720+00 to 724+50 |
| 83 | Plan and Profile – Outfall Ditch D – Sta. 724+50 to 728+00 |
| 84 | Buffalo Speedway Cross Sections – Sta. 110+40 to 117+00 |
| 85 | Buffalo Speedway Cross Sections – Sta. 118+00 to 125+00 |
| 86 | Buffalo Speedway Cross Sections – Sta. 126+00 to 132+22 |
| 87 | Buffalo Speedway Cross Sections – Sta. 133+00 to 140+00 |
| 88 | Buffalo Speedway Cross Sections – Sta. 141+00 to 147+00 |
| 89 | Buffalo Speedway Cross Sections – Sta. 148+00 to 151+14 |
| 90 | Buffalo Speedway Cross Sections – Sta. 152+00 to 153+35 |
| 91 | Buffalo Speedway Cross Sections – Sta. 154+00 to 156+00 |
| 92 | Buffalo Speedway Cross Sections – Sta. 157+00 to 163+00 |
| 93 | Buffalo Speedway Cross Sections – Sta. 164+00 to 170+00 |
| 94 | Buffalo Speedway Cross Sections – Sta. 171+00 to 178+14 |
| 95 | Buffalo Speedway Cross Sections – Sta. 179+00 to 181+00 |
| 96 | Connector Cross Sections – Sta. 0+16 to 9+00 |
| 97 | Connector Cross Sections – Sta. 10+00 to 14+00 |
| 98 | Holmes Road Cross Sections – Sta. 302+80 to 310+00 |
| 99 | Holmes Road Cross Sections – Sta. 311+00 to 313+93 |
| 100 | Pond A Cross Sections – Sta. 400+76 to 406+00 |
| 101 | Pond A Cross Sections – Sta. 407+00 to 410+46 |
| 102 | Pond B Cross Sections – Sta. 500+73 to 507+00 |
| 103 | Pond B Cross Sections – Sta. 507+90 to 515+24 |
| 104 | Pond B Cross Sections – Sta. 516+00 to 518+95 |
| 105 | Pond C Cross Sections – Sta. 600+72 to 609+30 |
| 106 | Pond C Cross Sections – Sta. 610+69 to 619+00 |
| 107 | Pond C Cross Sections – Sta. 620+55 to 626+02 |
| 108 | Pond D Cross Sections – Sta. 700+79 to 707+12 |
| 109 | Pond D Cross Sections – Sta. 708+00 to 713+92 |
| 110 | Pond D Cross Sections – Sta. 715+00 to 722+00 |
| 111 | Pond D Cross Sections – Sta. 723+00 to 725+15 |
| 112 | Standard Waterline Details |
| 113 | Prestressed Concrete Cylinder Pipe Details |
| 114 | Steel Pipe Details |
| 115 | Valve and Service Manhole Details |

| | |
|---|---|
| 116 | Air Valve and Manhole Details |
| 117 | Miscellaneous Waterline Details |
| 118 | Tunnel and Casing Details |
| 119 | Excavation, Bedding, Backfill & Pavement Repair Details |
| 120 | Cathodic Protection Details for Joint Bonding (1 of 2) |
| 121 | Cathodic Protection Details for Joint Bonding (2 of 2) |
| 122 | Cathodic Protection Details for Test Stations |
| 123 | Cathodic Protection Details for Test Stations and Anodes (1 of 2) |
| 124 | Cathodic Protection Details for Test Stations and Anodes (2 of 2) |
| 125 | Storm Sewer Details 1 of 2 |
| 126 | Storm Sewer Details 2 of 2 |
| 127 | Harris County Flood Control Interceptor Structure Details |
| 128 | Harris County Flood Control Storm Sewer & Riprap Details |
| 129 | Paving Details 1 of 2 |
| 130 | Paving Details 2 of 2 |
| 131 | Project Sign Details |
| 132 | Buffalo Speedway – Traffic Control Plan General Notes |
| 133 | Buffalo Speedway – Traffic Control Plan |
| 134 | Buffalo Speedway – Traffic Control Plan – Barricade Standard |
| 135 | Pavement Marking and Signing Plan 1 of 5 |
| 136 | Pavement Marking and Signing Plan 2 of 5 |
| 137 | Pavement Marking and Signing Plan 3 of 5 |
| 138 | Pavement Marking and Signing Plan 4 of 5 |
| 139 | Pavement Marking and Signing Plan 5 of 5 |
| 140 | Pavement Marking Details |
| 141 | Buffalo Speedway – Street Lighting Plan Sheet – Sheet 1 of 5 |
| 142 | Buffalo Speedway – Street Lighting Plan Sheet – Sheet 2 of 5 |
| 143 | Buffalo Speedway – Street Lighting Plan Sheet – Sheet 3 of 5 |
| 144 | Buffalo Speedway – Street Lighting Plan Sheet – Sheet 4 of 5 |
| 145 | Buffalo Speedway – Street Lighting Plan Sheet – Sheet 5 of 5 |
| 146 | Storm Water Pollution Prevention Plan 1 of 2 |
| 147 | Storm Water Pollution Prevention Plan 2 of 2 |
| 148 | Storm Water Pollution Prevention Plan Details |
| 149 | HCFCD Storm Water Pollution Prevention Details |
| 150 | Tree Protection Plan 1 of 11 |
| 151 | Tree Protection Plan 2 of 11 |
| 152 | Tree Protection Plan 3 of 11 |
| 153 | Tree Protection Plan 4 of 11 |
| 154 | Tree Protection Plan 5 of 11 |
| 155 | Tree Protection Plan 6 of 11 |
| 156 | Tree Protection Plan 7 of 11 |

| | |
|---|---|
| 157 | Tree Protection Plan 8 of 11 |
| 158 | Tree Protection Plan 9 of 11 |
| 159 | Tree Protection Plan 10 of 11 |
| 160 | Tree Protection Plan 11 of 11 |
| 161 | Harris County Express Review Sheet |

END OF DOCUMENT

Document 00041

# LIST OF PRE-QUALIFIED ASBESTOS/LEAD ABATEMENT, MOLD & SOIL REMEDIATION, DEMOLITION AND PETROLEUM STORAGE TANK REMOVAL CONTRACTORS

## 1.01 DOCUMENT INCLUDES

A. Authorization

B. List of Authorized Contractors.

## 2.0 RELATED DOCUMENTS

A. Section 13280 – Hazardous Materials Remediation

B. Section 13281&13282 – Abatement of Asbestos/Lead Containing Materials

## 3.0 AUTHORIZATION

A. The list of Contractors Pre-qualified for Asbestos/Lead Abatement, Mold & Soil Remediation, Demolition & Petroleum Storage Tank Removal ("List") was authorized on March 21, 2012, by City of Houston Council Motion No. 12-0180.

B. Only those firms on the List can be utilized by Bidder in subcontracting for asbestos & lead abatement, mold & soil remediation, demolition & petroleum storage tank removal included in the Work.

C. The List is administered by General Services Department. All inquiries should be directed to Gabriel Mussio (832-393-8079).

## 4.0 LIST OF AUTHORIZED CONTRACTORS

A. As of the date specified in paragraph 3.0.A., all contractors listed in paragraph 4.0.B were licensed in the State of Texas for the type of work. Authorized Contractors must maintain there license to be on the list.

B. Authorized Contractors:

1. AAR Incorporated, 6640 Signat Drive, Houston, Texas 77041

2. A & M Environmental, LLC, 6536 Supply Row, Houston, Texas 77011

3. ARC Abatement Inc., 6827 Signat Drive, Houston, Texas 77041

4. AIA General Contractors, Inc., 18331 Running Vine Lane, Spring, Texas 77379

5. Arrow Services, Inc., 10202 Airline Drive, Suite A, Houston, Texas 77037

6. Basic Environmental Group, LLC., 1839 Key Biscayne Court, Houston,

Texas 77065

7. Cherry Environmental Services, Inc., 4501 Cherry Lane, Santa Fe, Texas 77517

8. Clark-Tech Environmental Systems, Inc., 1515 Globe Street, Houston, Texas 77034

9. CRG Environmental Services, LLC., 2504 Avenue I, Rosenberg, Texas 77471

10. DNB Enterprises, Inc., 12969 West Hardy, Houston, Texas 77037

11. Dunphey Petroleum Services, Inc., 3505 Daphne, Houston, Texas 77021

12. EC Government Services, 5850 San Felipe, Suite 400, Houston, Texas 77057

13. Effective Environmental, Inc., 9950 Chemical Road, Pasadena, Texas 77507

14. GenTech Construction Company, LLC., 2211 West 34th Street, Houston, Texas 77018

15. Hazard Assessment Leaders, Inc., dba HAL, Inc., 5311 Petty Street, Houston, Texas 77007

16. Inland Environmental, Ltd., PO Box 6751, Kingwood, Texas 77325

17. J.T.B. Services, Inc., 9026 Lambright, Houston, Texas 77075

18. NCM, 16421 Aldine Westfield Road, Houston, Texas 77032

19. PfP Abatement Group, LLC., 3823 Shadow Trail Drive, Houston, Texas 77084

20. PEMCO, Inc., PO Box 2009, Pearland, Texas 77588-2009

21. RNDI Companies, Inc., 2255 Ridge Road, Suite 216, Rockwell, Texas 75807

22. Separation Systems Consultants, Inc., 17041 El Camino Real, Suite 200 Houston, Texas 77058

23. Texas Environmental Control, Inc., 4623 Steffani Lane, Houston, Texas 77041

24. Weston Solutions, Inc., 5599 San Felipe, Suite 700, Houston, Texas 77056

25. 1 Priority Environmental Services, Inc., 2573 Gravel Drive, Fort Worth, Texas 76118

END OF DOCUMENT

Document 00042

DESIGNATED SUBCONTRACTORS AND SUPPLIERS

A. Subcontract work for the following Sections to firm(s) listed and for reason(s) stated below:

**********
*Edit following list. Ensure individual Sections include names of designated firms and the reason is stated here. Use the following sample format.*
**********

1. [Section 12610- Open Office Furniture; procurement and installation of Open Office Furniture. The City has an existing procurement/installation contract with the firm stated in Section 12610.]

END OF DOCUMENT

Document 00200

TABLE OF CONTENTS

INSTRUCTIONS TO BIDDERS


| PARA | TITLE | PAGE |
|---|---|---|
| 1.0 | *RELATED DOCUMENTS* | 1 |
| 2.0 | *DEFINITIONS* | 1 |
| 3.0 | *NOTICE TO BIDDERS* | 2 |
| 4.0 | *BID DOCUMENTS* | 2 |
| 5.0 | *EXAMINATION OF DOCUMENTS, SITE, AND LOCAL CONDITIONS* | 2 |
| 6.0 | *INTERPRETATIONS DURING BIDDING* | 2 |
| 7.0 | *ADDENDA* | 3 |
| 8.0 | *SUBSTITUTION OF PRODUCTS* | 3 |
| 9.0 | *PREPARATION OF BIDS* | 3 |
| 10.0 | *BID SUBMISSION* | 3 |
| 11.0 | *BID SECURITY* | 4 |
| 12.0 | *SUBCONTRACTORS AND SUPPLIERS* | 4 |
| 13.0 | *MODIFICATION OR WITHDRAWAL OF BID* | 4 |
| 14.0 | *BID DISQUALIFICATION* | 4 |
| 15.0 | *PREBID MEETING* | 5 |
| 16.0 | *OPENING OF BIDS* | 5 |
| 17.0 | *EVALUATION AND CONSIDERATION OF BIDS* | 5 |
| 18.0 | *ACCEPTANCE OF THE BID* | 5 |

# Document 00200

# INSTRUCTIONS TO BIDDERS

1.0 *RELATED DOCUMENTS*

A. Document 00210 – Supplementary Instructions to Bidders.

B. Document 00320 – Geotechnical Information.

C. Document 00330 – Existing Conditions.

D. Document 00410 – Bid Form, Parts A & B.

E. Document 00495 – Post-Bid Procedures.

F. Document 00520 – Agreement.

G. Document 00700 – General Conditions.

H. Document 00800 – Supplementary Conditions.

2.0 *DEFINITIONS*

A. Definitions set forth in Document 00700 – General Conditions and in other documents of Project Manual, are applicable to Bid Documents.

B. *Addendum:* Written or graphic instrument issued prior to Bid opening, which clarifies, modifies, corrects, or changes Bid Documents.

C. *Alternate:* The total amount bid for additions to work, as described in Section 01110 – Summary of Work. Each Alternate includes cost of effects on adjacent or related components, and Bidder's overhead and profit.

D. *Bid:* A complete and properly signed offer to perform the Work in accordance with this Document and Document 00210 – Supplementary Instructions to Bidders.

E. *Bid Date:* Date and time set for receipt of Bids as stated in Document 00210 – Supplementary Instructions to Bidders, or as modified by Addenda.

F. *Bid Documents:* Project Manual, Drawings, and Addenda.

G. *Bid Supplement: A* Bid submittal that is required in Document 00410 – Bid Form.

H. *Bidder:* Person or firm, identified in Document 00410B – Bid Form – Part B, including its successors, and its authorized representative.

I. *Code:* Code of Ordinances, Houston, Texas.

J. *Low Bidder:* Apparent successful Bidder that qualifies as a responsible Bidder and that submits Bid with lowest Total Bid Price.

K. *Project Manager:* Person designated in Document 00100 – Advertisement for Bids and Document 00220 – Request for Bid Information to represent the City during bidding and post-bid periods.

L. *Project Manual:* Volume assembled for the Work that includes the bidding requirements, sample forms, Conditions of the Contract, and Specifications.

M. *Security Deposit:* A certified check, cashier's check, or bid bond in the amount of 10 percent of the Total Bid Price.

N. *Total Bid Price:* Total amount bid for performing the Work as identified by Bidder in Document 00410B – Bid Form – Part B, which amount includes:

1. Stipulated Price;
2. Total Base Unit Prices;
3. Total Extra Unit Prices;
4. Total Cash Allowances; and
5. Total Alternates.

3.0 *NOTICE TO BIDDERS*

A. The City of Houston Fair Campaign Ordinance makes it unlawful for a Contractor to offer any contribution to a candidate for City elective office (including elected officers and officers-elect) during a certain period of time prior to and following the award of the Contract by the City Council. The term "Contractor" includes proprietors of proprietorships, all partners of partnerships, and all officers, directors, and holders of 10 percent or more of the outstanding shares of corporations. A statement disclosing the names and business addresses of each of those persons will be required to be submitted with each bid or proposal; for a City Contract. Bidder shall complete and submit Document 00452 – Form A, Contractor Submission List, City of Houston Fair Campaign Ordinance, with its Bid to comply with this requirement. See Chapter 18 of the Code for further information.

B. Chapter 15, Article VIII, of the City's Code provides that no contract shall be let, nor any other business transaction entered into, by the City with any person indebted to the City or a qualifying entity, if the contractor or transaction comes within the provisions of Section 15-1 (c) of the Code. Exceptions are provided in Section 15-126 of the Code. Bidder shall complete and submit Document 00455 – Affidavit of Ownership or Control, with its Bid to comply with this requirement.

C. Neither bidder(s) nor any person acting on bidder(s)'s behalf shall attempt to influence the outcome of the award by the offer, presentation or promise of gratuities, favors, or anything of value to any appointed or elected official or employee of the City of Houston, their families or staff members. All inquiries regarding the solicitation are to be directed to the designated City Representative identified on the first page of the solicitation. Upon issuance of the solicitation through the pre-award phase and up to the date the City Secretary publicly posts notice of any City Council agenda containing the applicable award, aside from bidder's formal response to the solicitation, through the pre-award phase, written requests for clarification during the period officially designated for such purpose by the City Representative, neither bidder(s) nor persons acting on their behalf shall communicate with any appointed or elected official or employee of the City of Houston, their families or staff through written or oral means in an attempt to persuade or influence the outcome of the award or to obtain or deliver information intended to or which could reasonably result in an advantage to any bidder. However, nothing in this paragraph shall prevent a bidder from making public statements to the City Council convened for a regularly scheduled session after the official selection has been made and placed on the City Council agenda for action, or to a City Council committee convened to discuss a recommendation regarding the solicitation.

4.0 *BID DOCUMENTS*

A. The Bid Documents may be obtained at location specified in Document 00210 – Supplementary Instructions to Bidders.

B. The Bid Documents are made available only for the purpose of bidding on the Work. Receipt of Bid Documents does not grant a license for other purposes.

C. On receipt of Bid Documents, Bidder shall verify that documents are legible and complete, compare contents of Project Manual with Document 00010 – Table of Contents, and compare Index of Drawings with Document 00015 – List of Drawings. Bidder shall notify Project Manager if Bid Documents are incomplete.

D. If City of Houston Standard Specifications or Standard Details are required by the Project Manual, Bidder shall refer to Document 00210 – Supplementary Instructions to Bidders for purchase information.

5.0 *EXAMINATION OF DOCUMENTS, SITE, AND LOCAL CONDITIONS*

A. Bidder shall examine Project site, become familiar with local conditions under which the Work shall be performed, conduct appropriate investigations, and correlate personal observations with requirements of the Bid Documents before submitting a Bid.

B. Bidder shall make site investigations to the extent Bidder deems necessary to ascertain extent of subsurface conditions.

C. Failure of Bidder to perform the investigations prior to submitting a Bid does not relieve Bidder of responsibility for investigations, interpretations and proper use of available information in the preparation of its Bid.

D. Bidder shall observe limitations of access to occupied or restricted site as stated in Document 00210 – Supplementary Instructions to Bidders.

6.0 *INTERPRETATIONS DURING BIDDING*

A. Bidder shall immediately submit Document 00220 – Request for Bid Information to Project Manager upon finding errors, discrepancies, or omissions in Bid Documents. Confirmation of receipt of questions by the City is the responsibility of Bidder. Verbal discussions and answers are not binding.

B. Document 00220 – Request for Bid Information must be received at least 10 days before the Bid Date to allow issuance of Addenda in accordance with Paragraph 7.O.D. Replies, if issued, are by Addenda.

7.0 *ADDENDA*

A. Addenda that affect bidding requirements are applicable only during applicable only through issuance of the Notice to Proceed. Addenda that affect the Contract are a part of the Contract.

B. BIDDERS WHO SUBMIT A BID ON THIS PROJECT SHALL BE PRESUMED TO HAVE RECEIVED ALL ADDENDA AND TO HAVE INCLUDED ANY COST THEREOF IN THEIR BIDS, REGARDLESS OF WHETHER THEY ACKNOWLEDGE THE ADDENDA OR NOT.

C. The City will make Addenda available at same location where the Bid Documents may be obtained. The City will notify plan holders of record when Addenda are available. Bidders are responsible for obtaining Addenda after notification.

D. No Addendum will be issued later than noon on Monday before Bid Date, except Addenda with minor clarifications, withdrawing request for Bids, or postponing Bid Date.

8.0 *SUBSTITUTION OF PRODUCTS*

A. No substitutions of Products will be considered during the bidding period.

9.0 *PREPARATION OF BIDS*

A. Bidder shall fill in applicable blanks in Document 00410A&B – Bid Form – Parts A & B and Bid Supplements. In addition, Bidder shall bid all Alternates. Bidder shall properly sign Document 00410B -Bid Form.

B. Bidder shall initial all pages, except signature page, of Document 00410B – Bid Form – Part B.

C. Bidder is responsible for all costs incurred by the Bidder, associated with preparation of its Bid and compliance with Post-bid Procedures.

D. Bidder may not adjust preprinted price on line items stating "Fixed Unit Price" in the description on the Bid Form.

E. Bidder may increase preprinted price on line items stating "Minimum Bid Price" in the description on the Bid Form by crossing out the minimum and inserting revised price on the line above.

F. Bidder may decrease preprinted price on line items stating "Maximum Bid Price" in the description on the Bid Form by crossing out the maximum and inserting revised price on the line above.

G. Bidder shall insert a price no greater than the maximum preprinted range and no less than the preprinted range for line items stating "Fixed Range Unit Price" in the description on the Bid Form by crossing out prices noted and inserting revised price on the line above.

H. Bidder may not adjust Cash Allowance amounts.

10.0 *BID SUBMISSION*

A. City Secretary will receive Bids on Bid Date at location specified in Document 00210 – Supplementary Instructions to Bidders.

B. Bids submitted after Bid Date will be returned to Bidder unopened.

C. Verbal, facsimile, or electronic Bids are invalid and will not be considered.

D. Bidder shall submit in person or by mail one copy of the signed Document 00410 – Bid Form, Parts A and B, along with required Security Deposit, and required Bid Supplements, in a sealed, opaque envelope. In addition, Bidder shall clearly identify Project, Bid Date and Bidder's name on outside of envelope. If forwarded by mail, the sealed envelope containing the Bid must be enclosed in another envelope addressed for postal delivery.

11.0 *BID SECURITY*

A. Bidder shall submit a Security Deposit with its Bid.

B. Certified Check or Cashier's Check

1. Bidder shall make check payable to the City of Houston.

2. A check is submitted on the condition that if Bidder is named Low Bidder and fails either to timely and properly submit documents required in Document 00495 – Post-Bid Procedures, the City will cash the check in accordance with Paragraph 11.0.E.

C. Bid Bond

1. The bid bond must be a valid and enforceable bond, signed by a surety that complies with other requirements set out by law.

2. The bid bond must name the City of Houston as obligee, and be signed by the Bidder as principal and signed and sealed by the surety.

3. The bid bond must be conditioned such that if Bidder is named Low Bidder and then fails to timely and properly submit documents required in Document 00495 – Post-Bid Procedures, surety will be obligated to pay to the City an amount in accordance with Paragraph 11.0.E.

D. Security Deposits will be retained until after the Contract is awarded or all Bids are rejected.

E. Low Bidder forfeits Security Deposit if it fails to timely and properly submit documents required in Document 00495 – Post-Bid Procedures. The City may claim an amount equal to the difference between the Total Bid

Price of the defaulting Bidder and the Total Bid Price of the Bidder awarded the Contract. If Security Deposit is a check, the City will reimburse any remaining balance to the defaulting Bidder.

12.0 *SUBCONTRACTORS AND SUPPLIERS*

A. The City may reject proposed Subcontractors or Suppliers.

B. Refer to Document 00800 – Supplementary Conditions, for MWBEPDBE, DBE and SBE goals.

13.0 *MODIFICATION OR WITHDRAWAL OF BID*

A. A Bidder may modify or withdraw a Bid submitted before the Bid Date by written notice to the City Secretary. The notice may not reveal the amount of the original Bid and must be signed by the Bidder.

B. Bidder may not modify or withdraw its Bid by verbal, facsimile, or electronic means.

C. A withdrawn Bid may be resubmitted up to the time designated for receipt of Bids.

14.0 *BID DISQUALIFICATION*

A. The City may disqualify a Bid if the Bidder:

1. fails to provide required Security Deposit in the proper amount;

2. improperly or illegibly completes information required by the Bid Documents;

3. fails to sign Bid or improperly signs Bid;

4. qualifies its Bid; or

5. improperly submits its Bid.

B. When requested, Low Bidder shall present satisfactory evidence that Bidder has regularly engaged in performing construction work as proposed, and has the capital, labor, equipment, and material to perform the Work.

15.0 *PREBID MEETING*

A. A prebid meeting is scheduled to be held at the place, time, and date listed in Document 00210 – Supplementary Instructions to Bidders.

B. All Bidders, subcontractors, and suppliers are invited to attend.

C. Representatives of City Engineer will attend.

16.0 *OPENING OF BIDS*

A. Bids are opened by the City Secretary and publicly read in City Council Chambers on the Public Level in City Hall Annex at 11:00 a.m. on Bid Date.

B. Place and date of Bid opening may be changed in accordance with Sections 15-3(b)(5) and 15-3(b)(6) of the City Code.

17.0 *EVALUATION AND CONSIDERATION OF BIDS*

A. Project Manager will tabulate, record and evaluate Bids.

B. The City may reject all Bids or may reject any defective Bid.

18.0 *ACCEPTANCE OF THE BID*

A. The City will send to Low Bidder Document 00498 – Notice of Intent to Award. Acceptance by the City is conditioned upon Bidder's timely and proper submittal of documents required in Document 00495 – Post-Bid Procedures.

B. The Bid remains open to acceptance and is irrevocable for the period of time stated in Document 00410A – Bid Form – Part A.

END OF DOCUMENT

Document 00210

# SUPPLEMENTARY INSTRUCTIONS TO BIDDERS

The following Paragraphs modify Document 00200 - Instructions to Bidders. Where a portion of the Instructions to Bidders is modified or deleted by these Supplementary Instructions, the unaltered portions of the Instructions to Bidders remains in effect.

2.0 – DEFINITIONS: Add the following Paragraphs to this Section:

O. *Office of Business Opportunity (OBO):* All references to Affirmative Action Contract Compliance Division (AACC) set forth in Document 00700 – General Conditions and in other documents of the Project Manual, shall refer to, and include, the Office of Business Opportunity.

P. *Certificate of Responsibility:* An unexpired and unrevoked letter from the Director containing an identification number and stating that a Bidder has met the minimum qualifications to bid on street and bridge contracts within the amount and type of bidding capacity, based on Texas Department of Transportation (TxDOT) determination of Bidder's capability and approval of financial stability.

Q. *Director:* Director, Department of Public Works and Engineering, City of Houston.

3.0 - NOTICE TO BIDDERS: Add the following Paragraph to this Section:

C. The City will award this contract to a "Local Business", as that term is defined in Section 15-176 of the City of Houston Code of Ordinances ("the Code"):

- If the bid of the Local Business is less than $100,000 and is the lowest responsible bid or is within 5% of the lowest bid received, or
- If the bid of the Local Business is more than $100,000 and is the lowest responsible bid or is within 3% of the lowest bid received, and
- Unless the Director determines that such an award would unduly interfere with contract needs, as provided in Section 15-181 of the Code.

If there is no bid of a Local Business that meets these criteria, the City will award the contract to the lowest responsible bidder.

3.0 - NOTICE TO BIDDERS: Add the following Paragraph to this Section:

D. This is a City Street and Bridge Construction or Improvement Contract which requires a current Certificate of Responsibility filed with the Director

no later than three business days prior to Project Bid Date. A Certificate of Responsibility is a valid Prequalification Approval Letter issued by TxDOT stating that a Bidder is qualified to bid on State Highway improvement contracts pursuant to 43 Texas Administrative Code, Section 9.12, as it may be amended from time-to-time, and Chapter 15, Article IV of the Code of Ordinances, Houston, Texas (the "Ordinance").

4.0 – BID DOCUMENTS: Add the following Paragraphs to this Section:

**A. Add the following Paragraph A.1:**

1. Bid documents may only be obtained electronically at the City's website: http://bidsets.publicworks.houstontx.gov/.

**D. Add the following Paragraph D.1:**

1. Copies of the City Standard Specifications and Details may be acquired at no cost on the City's website **http://documents.publicworks.houstontx.gov/document-center/cat_view/88-engineering-and-construction/92-specifications/208-division-02-16-standard-specifications.html**

E. The following plan rooms, whose names, addresses, phone and fax numbers were last updated on April 9, 2007, have been authorized by the City to display Bid Documents for examination:
(Note: The Bid Documents furnished to the plan rooms for examination can be in electronic format, in hard copies, or in any other formats pertaining to each City Contracting Division's discretion.)

1. AMTEK Information Services, Inc., 4001 Sherwood Lane, Houston, TX 77092, 713-956-0100, Fax 713-956-5340, Email: planroom@amtekusa.com

2. Associated Builders & Contractors, Inc., (ABC), 3910 Kirby, Suite 131, Houston, TX 77098-4151, 713-523-6222, Fax 713-874-0747. Email: lori@abchouston.org

3. Associated General Contractors (AGC-BB) Building Branch, 3825 Dacoma, Houston, TX 77092-8717, 713-843-3700, Fax 713-843-3701. Email: karla.s@agchouston.org

4. Associated General Contractors, (AGC-HHUI), Highway, Heavy Utilities and Industrial Branch, 2400 Augusta St., Suite 180, Houston, TX 77057, 713-334-7100, Fax 713-334-7130. Email: houston@agctx.org (Attention: Mel Keyser)

5. Construction Information Network, 1225 North Loop West, Suite 550, Houston, TX 77008, 713-868-2233 ext. 329, Fax 866-852-2713. Email: paul.tilford@cnsx.com

6. F. W. Dodge Corporation, 4101 Greenbriar, Suite 320, Houston, TX 77098, 713-529-4895, Fax 713-524-7639. Email: terrie_harris@mcgraw-hill.com

7. Hispanic Contractors Association of Houston (HCA-GHA), 11 Parker Road, Suite 7, Houston, TX 77241, 713-699-2732 or 832-754-3705, Fax 713-695-1556, Email: hispanicontractorsassociation@yahoo.com; or Randymagdaleno@yahoo.com

8. Houston Minority Business Development Center, 2900 Woodridge, Suite 124, Houston, TX 77087, 713-644-0821, Fax 713-644-3523. Email: gtamez@gacompanies.com

9. Reed Construction Data, 30 Technology Parkway South, Suite 100, Norcross, GA – 30092-8629. Tel. 1-800-424-3996 or 1-800-699-8640; Fax 1-800-317-0870 or 1-800-508-5370.

10. The Builders' Exchange of Texas, Inc., 3910 Kirby, Suite 131, Houston, TX 77098, 210-564-6900, Fax: 210-564-6921, Email: houston@bxtx.com

**F. Add the following Paragraph F.1:**

**1. Designation as a City Business or Local Business**

To be designated as a City or Local Business for the purpose of the Hire Houston First Program, as set out in Article XI of Chapter 15 of the Houston City Code, a bidder or proposer must submit the Hire Houston First Application and Affidavit to the Director of the Mayor's Office of Business Opportunity (OBO) and receive notice that the designation has been approved prior to submission of a bid or proposal. Submit with your bid a valid official letter from OBO with your designation as a City or Local Business.

5.0 - EXAMINATION OF DOCUMENTS, SITE, AND LOCAL CONDITIONS: Insert the following paragraph:

A. Add the following Paragraph D.1:

1. Work will be performed in public right-of-way. The site may be examined at any time during daylight hours.

9.0 – PREPARATION OF BIDS: Add the following Paragraph I to this Paragraph:

I. For math errors the City encounters in analyzing Bids, the following guidance will be used:

| In the event of a conflict between: | The Bid Price is: |
|---|---|
| 1. Individual Unit Price and Extension of that Unit Price | Individual Unit Price times Estimated Quantity |
| 2. A Unit Price extension and total of Unit Price Extensions | Sum of all Individual Unit Price Extensions |
| 3. Individual Alternate and total of Alternates | Sum of all Individual Alternates |
| 4. Individual subtotals for Stipulated Price, Base Unit Prices, Extra Unit Prices, Contractor Bonus, Cash Allowances, and Alternates; and the Total Bid Price | Sum of Individual subtotals for Stipulated Price, Base Unit Prices, Extra Unit Prices, Contractor Bonus, Cash Allowances and Alternates |

10.0 – BID SUBMISSION: Add the following Paragraph A.1 to this Section:

A. Add the following Paragraph A.1:

1. City Secretary will receive Bids at 900 Bagby, Room P101, Houston, Texas until 10:30 a.m., local time on January 22, 2015.

D. Submit one copy of the executed offer on the bid forms provided, properly signed, with required Security Deposit, and other Supplements to Bid Forms, in a sealed, opaque envelope. On the outside of the envelope, clearly identify the Certificate of Responsibility number, Bidders name, Project name, and the City's name. Bids submitted by mail shall be enclosed in a separate envelope addressed for mailing, and identifying the enclosure as a bid.

E. Bidders are responsible for obtaining a Certificate of Responsibility number for the class of contract indicated in Document 00210 – Supplementary Instructions to Bidders. TxDOT Certificate of Qualification letter must be filed with the Director not less than three days prior to Project Bid opening. Bidders who do not have a City of Houston Certificate of Responsibility will be notified by the City.

15.0 – PREBID MEETING: Add the following Paragraph A.1 to this Section:

A. Add the following Paragraph A.1:

1. A Prebid Meeting will be held at 2:00 P.M. on Tuesday, January 6, 2015, in 14th Floor, Conference Room No. 1453 at 611 Walker, Houston, Texas 77002.

END OF DOCUMENT

Document 00220

# REQUEST FOR BID INFORMATION

PROJECT: Buffalo Speedway Paving and Drainage: Holmes Road to West Airport

PROJECT No.: WBS No. N-000784-0001-4

TO: Stephen M. Campagna
14th Floor
611 Walker, Houston, Texas 77002

Phone No. (832) 395-2225
Fax No. (832) 395-2252
Email Addr. stephen.campagna@houstontx.gov

(Type or Print question legibly; use back if more space is needed)

_____
_____
_____
_____
_____
_____
_____
_____
_____

This request relates to _____ and/or _____
Drawing / Detail No. Specification Section No.

Attachments to this request: _____
_____
_____

_____ _____
Signature Date

_____
(Type or Print Name)

_____
(Type or Print Company Name)

END OF DOCUMENT

Document 00320

# GEOTECHNICAL INFORMATION

1. DOCUMENT INCLUDES

   A. Soils investigation reports.
   B. Bidder's responsibilities.

2. RELATED DOCUMENTS

   A. Document 00340 – Environmental Information
   B. Section 02260 - Trench Safety Systems

3. SITE INVESTIGATION REPORTS

   A. In the design and preparation of Contract documents for this Project, the City and Design Consultant have used information in geotechnical reports for the investigation and analysis of soils and subsurface conditions at the Project site.

   B. An electronic copy of the report for this project is included in a CD-Rom affixed to the inside front cover of the project manual.

   C. Neither the City nor Design Consultant is responsible for accuracy or completeness of any information or data.

4. GEOTECHNICAL REPORTS

   A. Report No.: TWEI-11.13.180 Prepared by (Firm Name): Tolunay-Wang Engineers, Inc.; Title: Geotechnical Study-Buffalo Speedway Extension from West Airport Blvd. to Willowbend Blvd., Pavement, Utilities, Bridge Overpass and Off-Site Drainage Ditches.; Report Date: February 2012 No. of Pages: 302

5. BIDDER RESPONSIBILITIES

   A. Bidder shall take full responsibility for interpretation and use of information contained in above listed reports for its bidding and construction purposes.

   B. Bidder may perform additional soils investigations as Bidder deems appropriate.

END OF DOCUMENT

Document 00340

# ENVIRONMENTAL INFORMATION

## 1.0 DOCUMENT INCLUDES

A. Environmental Site Assessment, if applicable.

B. Asbestos and Lead Surveys, if applicable.

C. Bidder's responsibilities.

## 2.0 RELATED DOCUMENTS

A. Document 00320 - Geotechnical Information

## 3.0 SITE INVESTIGATION REPORTS

A. In the design and preparation of Contract documents for this Project, the City and Design Consultant have used information in environmental site assessment reports for the investigation and analysis of soils and subsurface conditions at the Project site.

B. In the design and preparation of Contract documents for this Project, the City and Design Consultant have relied upon information in surveys taken for Asbestos-containing Materials (ACMs) and lead at the Project site.

C. An electronic copy of each report for this project is included in a CD-Rom affixed to the inside front cover of the project manual.

D. Neither the City nor Design Consultant is responsible for accuracy or completeness of any information or data.

## 4.0 REPORTS

A. Environmental Assessment Surveys

1. Report No.: 8357YPT12 Prepared by (Firm Name): Berg Oliver Associates, Inc.; Title: Limited Phase II Environmental Site Assessment Report; Report Date: September 2012 No. of Pages: 150

## 5.0 BIDDER RESPONSIBILITIES

A. Bidder shall take full responsibility for interpretation and use of information contained in above listed reports for bidding and construction purposes.

B. Bidder may perform additional investigations as Bidder deems appropriate.

END OF DOCUMENT

Document 00410A

BID FORM – PART A

To: **The Honorable Mayor and City Council of the City of Houston**
**City Hall Annex**
**900 Bagby Street**
**Houston, Texas 77002**

Project: Buffalo Speedway Paving and Drainage: Holmes Road to West Airport
Project No.: WBS No. N-000784-0001-4
Bidder: _____
(Print or type full name of business entity, such as corporation, LLC, etc)

**OFFER**

**A. Total Bid Price:** Having examined the Project location and all matters referred to in Bid Documents for the Project, we, the undersigned, offer to enter into a Contract to perform the Work for the Total Bid Price shown on the signature page of this Document

**B. Security Deposit:** Included with the Bid is a Security Deposit in the amount of 10 percent of the Total Bid Price subject to terms described in Document 00200 – Instructions to Bidders.

**C. Period for Bid Acceptance:** This offer is open to acceptance and is irrevocable for 90 days from Bid Date. That period may be extended by mutual written agreement of the City and Bidder.

**D. Addenda**: All Addenda have been received. Modifications to Bid Documents have been considered and all related costs are included in the Total Bid Price.

**E. Bid Supplements:** The following documents are attached:

[X] Security Deposit *(as defined in Document 00200 – Instructions to Bidders)*
[X] Document 00450 - Bidder's Statement of MWSBE Status
[X] Document 00452 - Contractor's Submission List - Fair Campaign Ordinance Form A
[X] Document 00453 – Bidder's Statement of Residency *(not required for AIP funded project)*
[X] Document 00454 - Affidavit of Non-interest
[X] Document 00455 - Affidavit of Ownership or Control
[ ] Document 00456 - Bidder's Certificate of Compliance with Buy American Program *(required for AIP funded project)*
[X] Document 00457 – Conflicts of Interest Questionnaire (CIQ)
[ ] Document 00458 - Bidder's Certificate Regarding Foreign Trade Restriction *(required for AIP funded project)*
[ ] Document 00459 - Contractor's Statement Regarding Previous Contracts Subject to EEO *(required for AIP funded project)*
[X] Document 00460 – (POP 1) Pay or Play Acknowledgement Form

[X] Document 00470 – Bidder's MWSBE Participation Plan *(required unless no MWSBE participation goal is provided in Document 00800* (the "Goal")*)*.

[X] Document 00471 – Pre-bid Good Faith Efforts *(required if the goal in Bidder's Participation Plan–Document 00470 is lower than the Goal).*

[X] Document 00472 – Bidder's Goal Deviation Request *(required if the goal in Bidder's Participation Plan–Document 00470 is lower than the Goal).*

[X] Others as listed: Valid official letter from OBO with your designation as a City or Local Business *(Bidder's Participation Hire Houston First)*

## CONTRACT TIME

**A.** If offer is accepted, Contractor shall achieve Date of Substantial Completion within 442 days after Date of Commencement of the Work, subject to adjustments of Contract Time as provided in the Contract.

Document 00410B

BID FORM – PART B

## 1.0 TOTAL BID PRICE HAS BEEN CALCULATED BY BIDDER, USING THE FOLLOWING COMPONENT PRICES AND PROCESS (PRINT OR TYPE NUMERICAL AMOUNTS):

### A. STIPULATED PRICE: $N/A

(Total Bid Price; minus Base Unit Prices, Extra Unit Prices, Cash Allowances and All Alternates, if any)

### B. BASE UNIT PRICE TABLE:

**B1. UNIT PRICE-GENERAL ITEMS**

| Item No. | Spec Ref. | Base Unit Short Title | Unit of Measure | Estimated Quantities | Unit Price | Total in figures |
|---|---|---|---|---|---|---|
| 1 | 01502 | Mobilization | LS | 1 | $535,000.00 (1) | $535,000.00 (1) |
| 2 | 01554 | Ground Mounted Sign and Post Assembly | EA | 28 | | |
| 3 | 01555 | Traffic Control and Regulation | LS | 1 | $27,880.00 (2) | $27,880.00 (2) |
| 4 | 01555 | Flagman (Uniformed Police Officer) | LS | 1 | $1,600.00 (2) | $1,600.00 (2) |
| 5 | 01562 | Tree and plant protection | LS | 1 | | |
| 6 | 01570 | Inlet Sediment Trap | EA | 68 | | |
| 7 | 01570 | Inlet Protection Barrier | LF | 1,224 | | |
| 8 | 01570 | Filter fabric fence | LF | 22,446 | | |
| 9 | 01570 | Reinforced filter fabric barrier | LF | 16,176 | | |
| 10 | 01570 | Interceptor swale | LF | 16,542 | | |
| 11 | 01575 | Stabilized construction exit | EA | 4 | | |
| 12 | 01580-01 | Standard City of Houston Type III Barricade | EA | 6 | | |



Bidder's Initials [ ]

| Item No. | Spec Ref. | Base Unit Short Title | Unit of Measure | Estimated Quantities | Unit Price | Total in figures |
|---|---|---|---|---|---|---|
| 13 | 02220 | Demolish, cap and abandon well per TCEQ regulations | LS | 1 | | |
| 14 | 02221 | Remove and Dispose City of Houston Standard Type III Barricade | EA | 2 | | |
| 15 | 02221 | Demolition of existing foundation, equipment, and materials (Reqr'd Locations) ( STA 180+50 to 182+50, STA 184+90 to 186+25) | SY | 3,500 | | |
| 16 | 02221 | Remove Existing Utility Pole Foundation | EA | 3 | | |
| 17 | 02221 | Remove And Dispose of Miscellaneous 3" to 4" shallow piping including capping | LF | 390 | | |
| 18 | 02233 | Clearing and grubbing | AC | 62 | | |
| 19 | 02260 | Trench safety system for trench excavations | LF | 21,130 | | |
| 20 | 02915 | Plant 1.5 inch Tree with 15 gallon container | EA | 431 | | |
| 21 | 02915 | Water trees 1st two years | EA | 431 | | |
| 22 | 02915 | Install Root Pruning Trench | EA | 180 | | |
| 23 | 02921 | Hydromulch seeding | AC | 47 | | |
| 24 | 02922 | Sodding | SY | 6,921 | | |
| **TOTAL GENERAL ITEMS** | | | | | | $_____ |

REST OF PAGE INTENTIONALLY LEFT BLANK



Bidder's Initials [ ]

**B2. UNIT PRICE-PAVING ITEMS**

| Item No. | Spec Ref. | Base Unit Short Title | Unit of Measure | Estimated Quantities | Unit Price | Total in figures |
|---|---|---|---|---|---|---|
| 25 | 02315 | Roadway Excavation with or without subgrade | CY | 21,193 | | |
| 26 | 02315 | Embankment Fill | CY | 415 | | |
| 27 | 02336 | Lime for Lime stabilized Subgrade (4% DRY WEIGHT) | TON | 863 | | |
| 28 | 02336 | Lime Stabilized Subgrade 8-inch thick | SY | 57,494 | | |
| 29 | 02581 | Conduit 2-inch Sch 40 PVC | LF | 15,700 | | |
| 30 | 02711 | Hot Mix Asphalt Base Course (Type A/B) / All Thickness | TON | 2,184 | | |
| 31 | 02741 | Hot Mix Asphalt Concrete Pavement 2-inch thick | TON | 472 | | |
| 32 | 02751 | Reinforced Concrete Pavement 9-inch thick | SY | 50,779 | | |
| 33 | 02752 | Street Pavement Expansion Joint with Load transfer | LF | 6,640 | | |
| 34 | 02752 | Horizontal Dowels, 18-inch | EA | 578 | | |
| 35 | 02752S | Saw Cutting | LF | 102 | | |
| 36 | 02754 | Concrete Driveways including Excavation 6-inch thick | SF | 703 | | |
| 37 | 02762 | Blast cleaning pavement markers 4-inch wide lines | LF | 840 | | |
| 38 | 02762 | Blast cleaning pavement markers 8-inch wide lines | LF | 840 | | |
| 39 | 02764 | Raised Pav Marker TY II Two face Reflective (C/R) | EA | 560 | | |
| 40 | 02764 | Raised Pav Marker TY II Two face Reflective (A/A) | EA | 525 | | |
| 41 | 02767 | Thermoplastic Pavement Marking 4-inch wide White (SLD) | LF | 400 | | |



Bidder's Initials [ ]

| Item No. | Spec Ref. | Base Unit Short Title | Unit of Measure | Estimated Quantities | Unit Price | Total in figures |
|---|---|---|---|---|---|---|
| 42 | 02767 | Thermoplastic Pavement Marking 4-inch wide Yellow (SLD) | LF | 4,000 | | |
| 43 | 02767 | Thermoplastic Pavement Marking 4-inch wide White (BRK) | LF | 6,500 | | |
| 44 | 02767 | Thermoplastic Pavement Marking 4-inch wide White (DOT) | LF | 200 | | |
| 45 | 02767 | Thermoplastic Pavement Marking 4-inch wide Yellow (DOT) | LF | 90 | | |
| 46 | 02767 | Thermoplastic Pavement Marking Med Nose Yellow TYPE II | EA | 22 | | |
| 47 | 02767 | Thermoplastic Pavement Marking 8-inch wide White (SLD) | LF | 1,325 | | |
| 48 | 02767 | Thermoplastic Pavement Marking 8-inch wide Yellow (SLD) | LF | 780 | | |
| 49 | 02767 | Thermoplastic Pavement Marking 12-inch wide White (SLD) | LF | 590 | | |
| 50 | 02767 | Thermoplastic Pavement Marking 12-inch wide White (DOT) | LF | 110 | | |
| 51 | 02767 | Thermoplastic Pavement Marking 12-inch wide Yellow (SLD) TYPE II | LF | 675 | | |
| 52 | 02767 | Thermoplastic Pavement Marking 24-inch wide White (SLD) | LF | 350 | | |
| 53 | 02767 | Thermoplastic Pavement Marking 24-inch wide Yellow (SLD) | LF | 800 | | |
| 54 | 02767 | Thermoplastic Pavement Marking symbol COMBINED ARROW | EA | 19 | | |
| 55 | 02767 | Thermoplastic Pavement Marking Elongated Word ONLY | EA | 11 | | |
| 56 | 02771 | 6-Inch Concrete Curb (Monolithic) | LF | 30,119 | | |
| 57 | 02771 | Roll Over Curb (4"x12") | LF | 534 | | |
| 58 | 02771 | Concrete Paving Header | LF | 45 | | |

| Item No. | Spec Ref. | Base Unit Short Title | Unit of Measure | Estimated Quantities | Unit Price | Total in figures |
|---|---|---|---|---|---|---|
| 59 | 02771 | Modified Concrete Paving Header | LF | 531 | | |
| 60 | 02772 | Black Reinforced Concrete Median Nose | SY | 1,440 | | |
| 61 | 02775 | Sidewalk 4-1/2-inch thick | SF | 79,513 | | |
| 62 | 02775 | Curb Ramp | SF | 760 | | |
| 63 | 02960 | Milling Asphalt pavement up to 2-inches | SY | 3,216 | | |
| 64 | 16710 | Pull Boxes | EA | 7 | | |
| **TOTAL PAVING ITEMS** | | | | | | $_____ |

REST OF PAGE INTENTIONALLY LEFT BLANK

**B3. UNIT PRICE-STORM SEWER ITEMS**

| Item No. | Spec Ref. | Base Unit Short Title | Unit of Measure | Estimated Quantities | Unit Price | Total in figures |
|---|---|---|---|---|---|---|
| 65 | 02082/ 02087 | Type C manhole for 42-inch diameter and smaller sewers | EA | 17 | | |
| 66 | 02082/ 02087 | Type C manhole for 48-inch to 72-inch diameter sewers | EA | 2 | | |
| 67 | 02315 | Construction of roadside ditch | LF | 6,762 | | |
| 68 | HCFCD 02315 | Excavation of drainage pond (ponds A, B, C &D) | CY | 76,271 | | |
| 69 | HCFCD 02315 | Pond Embankment | CY | 12,599 | | |
| 70 | HCFCD 02378 | Rip-rap Gradation No. 2, 24-inch thick mat | SY | 3,160 | | |
| 71 | 02631 | 36-inch diameter culvert w/ 4:1 SET's | LF | 55 | | |
| 72 | 02631 | 24-inch diameter storm sewer by open cut | LF | 63 | | |
| 73 | 02631 | 30-inch diameter storm sewer by open cut | LF | 562 | | |
| 74 | 02631 | 36-inch diameter storm sewer by open cut | LF | 2,567 | | |
| 75 | 02631 | 42-inch diameter storm sewer by open cut | LF | 1,093 | | |
| 76 | 02631 | 48-inch diameter storm sewer by open cut | LF | 451 | | |
| 77 | 02631 | 4-foot by 2-foot box storm sewer by open cut | LF | 102 | | |
| 78 | 02631 | 4-foot by 3-foot box storm sewer by open cut | LF | 181 | | |
| 79 | 02631 | 5-foot by 3-foot box storm sewer by open cut | LF | 301 | | |
| 80 | 02631 | 5-foot by 4-foot box storm sewer by open cut | LF | 259 | | |
| 81 | 02631 | 6-foot by 4-foot box storm sewer by open cut | LF | 1,772 | | |
| 82 | 02631 | 10-foot by 5-foot box storm sewer by open cut | LF | 251 | | |

| Item No. | Spec Ref. | Base Unit Short Title | Unit of Measure | Estimated Quantities | Unit Price | Total in figures |
|---|---|---|---|---|---|---|
| 83 | 02631 | 24-inch diameter CMP storm sewer outfall | LF | 1,444 | | |
| 84 | 02631 | 54-inch diameter CMP storm sewer outfall | LF | 48 | | |
| 85 | 02631 | 60-inch diameter CMP storm sewer outfall | LF | 124 | | |
| 86 | 02631 | 66-inch diameter CMP storm sewer outfall | LF | 54 | | |
| 87 | 02631 | B/S Int Structure w/ 24-inch diameter CMP outfall | EA | 26 | | |
| 88 | 02631 | 48-inch diameter CMP storm sewer outfall including timber bent | LF | 260 | | |
| 89 | 02631 | 54-inch diameter CMP storm sewer outfall including timber bent | LF | 716 | | |
| 90 | 02633 | 24-inch diameter storm sewer lead | LF | 1,389 | | |
| 91 | 02633 | Type E inlet (Pre Cast) | EA | 4 | | |
| 92 | 02633 | Type C inlet | EA | 2 | | |
| 93 | 02633 | Type C-1 inlet | EA | 30 | | |
| 94 | 02633 | Type C-1 inlet (Modified) | EA | 6 | | |
| 95 | 02633 | Junction Box with lid or grate top for storm sewer | EA | 8 | | |
| 96 | 02633 | XL Junction Box with lid or grate top for storm sewer | EA | 6 | | |
| **TOTAL STORM SEWER ITEMS** | | | | | | $_____ |

REST OF PAGE INTENTIONALLY LEFT BLANK



Bidder's Initials [ ]

**B4. UNIT PRICE-WATER ITEMS**

| Item No. | Spec Ref. | Base Unit Short Title | Unit of Measure | Estimated Quantities | Unit Price | Total in figures |
|---|---|---|---|---|---|---|
| 97 | 02082 | Extra Depth Manhole | VF | 7 | | |
| 98 | 02082 | Service manhole for air valve | EA | 3 | | |
| 99 | 02086 | Adjust existing manhole frame and cover to new grade | EA | 1 | | |
| 100 | 02511 | 24-inch diameter DIP water line, by open-cut with restrained joints | LF | 8,830 | | |
| 101 | 02511 | 24-inch diameter DIP water line, by trenchless construction with restrained joints | LF | 80 | | |
| 102 | 02511 | 24-inch diameter DIP water line in steel casing, by trenchless construction with restrained joints | LF | 110 | | |
| 103 | 02511 | Removal of 16-inch blind flange | EA | 1 | | |
| 104 | 02511 | Remove 24-inch diameter internal elliptical or dished head plug | EA | 1 | | |
| 105 | 02513 | 16-inch diameter wet connection | EA | 1 | | |
| 106 | 02513 | 24-inch diameter wet connection | EA | 1 | | |
| 107 | 02520 | 6-inch diameter fire hydrant branch by open-cut | LF | 375 | | |
| 108 | 02520 | Fire hydrant assembly, all depths, including 6-inch diameter gate valve and box | EA | 23 | | |
| 109 | 02522 | 24-inch diameter butterfly valve | EA | 4 | | |
| 110 | 02524 | 2-inch diameter combination air valve assembly | EA | 3 | | |
| 111 | 16640 | Cathodic Protection System | LS | 1 | | |
| **TOTAL WATER ITEMS** | | | | | | $_____ |



Bidder's Initials [ ]

**B5. UNIT PRICE-POTENTIAL PETROLEUM CONTAMINATED AREA ITEMS**

| Item No. | Spec Ref. | Base Unit Short Title | Unit of Measure | Estimated Quantities | Unit Price | Total in figures |
|---|---|---|---|---|---|---|
| 112 | 01570 | Interceptor swale, within limits of PPCA | LF | 352 | | |
| 113 | 02082/ 02087 | Type C manhole for 42-inch diameter and smaller sewers, within limits of PPCA | EA | 2 | | |
| 114 | 02105 | Preparatory work for sampling and analysis in Potentially Petroleum Contaminated Area (PPCA) | LS | 1 | | |
| 115 | 02120 | Transportation and disposal of Class I soils | CY | 30778 | | |
| 116 | 02260 | Trench safety system for trench excavations within limits of PPCA | LF | 1067 | | |
| 117 | 02315 | Construction of roadside ditch, within limits of PPCA | LF | 158 | | |
| 118 | 02315 | Construction of drainage pond (ponds A, B, C &D), within limits of PPCA | CY | 901 | | |
| 119 | 02315 | Pond Embankment, within limits of PPCA | CY | 198 | | |
| 120 | HCFCD 02378 | Rip-rap Gradation No. 2, 24-inch thick mat, within limits of PPCA | SY | 300 | | |
| 121 | 02511 | 24-inch diameter DIP water line by open-cut with restrained joints, within limits of PPCA | LF | 400 | | |
| 122 | 02520 | Fire hydrant assembly, all depths, including 6-inch diameter gate valve and box within limits of PPCA | EA | 2 | | |
| 123 | 02520 | 6-inch diameter fire hydrant branch by open-cut within limits of PPCA | LF | 32 | | |
| 124 | 02522 | 24-inch diameter butterfly valve, within limits of PPCA | EA | 1 | | |
| 125 | 02524 | 2-inch diameter combination air valve assembly, within limits of PPCA | EA | 1 | | |
| 126 | 02631 | 36-inch diameter storm sewer by open cut, within limits of PPCA | LF | 296 | | |

| Item No. | Spec Ref. | Base Unit Short Title | Unit of Measure | Estimated Quantities | Unit Price | Total in figures |
|---|---|---|---|---|---|---|
| 127 | 02631 | 60-inch diameter CMP storm sewer outfall, within limits of PPCA | LF | 55 | | |
| 128 | 02631 | 54-inch diameter CMP storm sewer outfall including timber bent, within limits of PPCA | LF | 200 | | |
| 129 | 02633 | 24-inch diameter storm sewer lead, within limits of PPCA | LF | 84 | | |
| 130 | 02633 | Type C-1 inlet, within limits of PPCA | EA | 2 | | |
| 131 | 02633 | XL Junction Box with lid or grate top for storm sewer, within limits of PPCA | EA | 1 | | |
| **TOTAL POTENTIAL PETROLEUM CONTAMINATED AREA ITEMS** | | | | | | $_____ |

REST OF PAGE INTENTIONALLY LEFT BLANK

## C. EXTRA UNIT PRICE TABLE:

| Item No. | Spec Ref. | Extra Unit Short Title | Unit of Measure | Estimated Quantities | Unit Price | Total in figures |
|---|---|---|---|---|---|---|
| 132 | 01578 | Ground Water Control for open-cut construction | LF | 1000 | $25.00 (2) | |
| 133 | 02317 | 6" Over excavate trench bottom | LF | 200 | $15.00 (2) | |
| 134 | 02318 | Excavation around obstructions | CY | 200 | $10.00 (2) | |
| 135 | 02318 | Extra hand excavation | CY | 200 | $10.00 (2) | |
| 136 | 02318 | Extra machine excavation | CY | 200 | $15.00 (2) | |
| 137 | 02318 | Extra placement of backfill material | CY | 200 | $25.00 (2) | |
| 138 | 02318 | Extra cement-stabilized sand | CY | 200 | $35.00 (2) | |
| **TOTAL EXTRA UNIT ITEMS** | | | | | | $_____ |

REST OF PAGE INTENTIONALLY LEFT BLANK

## D. CASH ALLOWANCE TABLE:

| Item No. | Spec Ref. | Cash Allowance Short Title | Cash Allowance in figures (1) |
|---|---|---|---|
| 139 | 01110 | HCFCD Permit Fee | $1,000.00 |
| 140 | 01110 | Floodplain Development Permit Fee | $1,000.00 |
| 141 | 01110 | Lane Closure Permit Fee | $250.00 |
| 142 | 01110 | Street Cut Permit Fee | $1,000.00 |
| 143 | 01110 | Union Pacific Boring and ROE Permits | $5,000.00 |
| 144 | 01110 | Union Pacific Flagman Fee | $37,800.00 |
| 145 | 02581 | Street Lighting | $26,570.00 |
| **TOTAL CASH ALLOWANCE ITEMS** | | | **$72,620.00** |

## E. ALTERNATES TABLE:

| Item No. | Spec Ref. | Alternate Short Title | Total Price for alternate in figures |
|---|---|---|---|
| | | NONE | |
| **TOTAL ALTERNATES** | | | **$0.00** |



Bidder's Initials [ ]

**F. TOTAL BID PRICE:** $_____
(Add Totals for Items A., B., C., D., and E. above)

**2.0 SIGNATURES:** By signing this Document, I agree that I have received and reviewed all Addenda and considered all costs associated with the Addenda in calculating the Total Bid Price.

Bidder: _____
(Print or type full name of your proprietorship, partnership, corporation, or joint venture.*)

**By: _____
Signature Date

Name: _____
(Print or type name) Title

Address: _____
(Mailing)

_____
(Street, if different)

Telephone and Fax Number: _____
(Print or type numbers)

* If Bid is a joint venture, add additional Bid Form signature sheets for each member of the joint venture.

** Bidder certifies that the only person or parties interested in this offer as principals are those named above. Bidder has not directly or indirectly entered into any agreement, participated in any collusion, or otherwise taken any action in restraint of free competitive bidding.

Note: This document constitutes a government record, as defined by § 37.01 of the Texas Penal Code. Submission of a false government record is punishable as provided in § 37.10 of the Texas Penal Code.

Footnotes for Tables B through E:
(1) Fixed Unit Price determined prior to Bid. Cannot be adjusted by the Bidder.
(2) Minimum Bid Price determined prior to Bid. Can be increased by the Bidder by crossing out the Minimum and noting revised price on the line above.
(3) Maximum Bid Price determined prior to Bid. Can be decreased but not increased by Bidder by crossing out the Maximum and noting revised price on the line above. A Bid that increases the Maximum Bid Price may be found non-conforming and non-responsive.
(4) Fixed Range Bid Price determined prior to Bid. Unit Price can be adjusted by Bidder to any amount within the range defined by crossing out prices noted and noting revised price on the line above.

Document 00430

# BIDDER'S BOND

**THAT WE**, _____, as Principal,
(Bidder)
("Bidder"), and the other subscriber hereto, _____, as Surety, do hereby acknowledge ourselves to be held and firmly bound to the City of Houston, a municipal corporation, in the sum of _____ Dollars ($_____) (an amount equal to 10 percent of the Total Bid Price, including Cash Allowances and Alternates, if any, for the payment of which sum, well and truly to be made to the City of Houston and its successors, the Bidder and Surety do bind themselves, their heirs, executors, administrators, successors, and assigns, jointly and severally.

**THE CONDITIONS OF THIS OBLIGATION ARE SUCH THAT:**

**WHEREAS**, the Bidder has submitted on or about this day a proposal offering to perform the following:

_____
(Project Name, Location and Number)
in accordance with the Drawings, Specifications, and terms and conditions related thereto to which reference is hereby made.

**NOW, THEREFORE**, if the Bidder's offer as stated in the Document 00410 – Bid Form is accepted by the City, and the Bidder executes and returns to the City Document 00520 – Agreement, required by the City, on the forms prepared by the City, for the Work and also executes and returns the same number of the Performance, Payment and Maintenance Bonds (such bonds to be executed by a Corporate Surety authorized by the State Board of Insurance to conduct insurance business in the State of Texas, and having an underwriting limitation in at least the amount of the bond) and other submittals as required by Document 00495 - Post-Bid Procedures, in connection with the Work, within the Contract Time, then this obligation shall become null and void; otherwise it is to remain in full force and effect.

If Bidder is unable to or fails to perform the obligations undertaken herein, the undersigned Bidder and Surety shall be liable to the City for the full amount of this obligation which is hereby acknowledged as the amount of damages which will be suffered by the City on account of the failure of such Bidder to perform such obligations, the actual amount of such damages being difficult to ascertain.

Notices required or permitted hereunder shall be in writing and shall be deemed delivered when actually received or, if earlier, on the third day following deposit in a United States Postal Service post office or receptacle, with proper postage affixed (certified mail, return receipt requested), addressed to the respective other Party at the address prescribed in the Contract documents, or at such other address as the receiving Party may hereafter prescribe by written notice to the sending Party.

**IN WITNESS THEREOF**, the Bidder and Surety have signed and sealed this instrument on the respective dates written below their signatures and have attached current Power of Attorney.

ATTEST, SEAL: (if a corporation)
WITNESS: (if not a corporation)

By: _____
Name:
Title:

ATTEST/SURETY WITNESS: (SEAL)

By: _____
Name:
Title:
Date:

_____
(Name of Bidder)

By: _____
Name:
Title:
Date:

_____
(Full Name of Surety)

_____
(Address of Surety for Notice)

_____

_____
(Telephone Number of Surety)

By: _____
Name:
Title:
Date:

END OF DOCUMENT

Document 00450

BIDDER'S STATEMENT OF MWBE/PDBE/DBE/SBE STATUS

This certifies that the status of the Bidder, _____, in
(Bidder's Name)
regard to the City of Houston Code of Ordinances, Chapter 15, Article V, relating to City-wide percentage goals for contracting with Minority and Women-owned Business Enterprises (MWBE) and Disadvantaged Business Enterprises (DBE), Chapter 15, Article VI, relating to City-wide percentage goals for contracting with Persons with Disabilities Business Enterprises (PDBE) and Chapter 15, Article IX, relating to City-wide percentage goals for contracting with a Small Business Enterprise (SBE) is as follows:

1. Bidder (individual, partnership, corporation) is [__] is not [__] a Minority Business Enterprise as certified by the Office of Business Opportunity.

2. Bidder (individual, partnership, corporation) is [__] is not [__] a Women-owned Business Enterprise as certified by the Office of Business Opportunity

3. Bidder (individual, partnership, corporation) does [__] does not [__] declare itself to be a Persons with Disabilities Business Enterprise as defined above.

4. Bidder (individual, partnership, corporation) does [__] does not [__] declare itself to be a Disadvantaged Business Enterprise as defined above.

5. Bidder (individual, partnership, corporation) does [__] does not [__] declare itself to be a Small Business Enterprise as defined above.

Signature: _____

Title: _____

Date: _____

END OF DOCUMENT

Document 00452
Form A
CONTRACTOR SUBMISSION LIST
CITY OF HOUSTON FAIR CAMPAIGN ORDINANCE

The City of Houston Fair Campaign Ordinance makes it unlawful for a Contractor to offer any contribution to a candidate for City elective office (including elected officers-elect) during a certain period of time prior to and following the award of the Contract by the City Council. The term "Contractor" includes proprietors of proprietorships, partners or joint venturers having an equity interest of 10 percent or more for the partnership or joint venture, and officers, directors and holders of 10 percent or more of the outstanding shares of corporations. Submission of a statement disclosing the names and business addresses of each of those persons is required with each Bid/Proposal for a City Contract. See Chapter 18 of the City of Houston Code of Ordinances for further information.

This list is submitted under the provisions of Section 18-36(b) of the City of Houston Code of Ordinances in connection with the attached Bid/Proposal of:

Firm or Company Name: _____
Firm or Company Address: _____
_____

The firm/company is organized as indicated below. Check one as applicable and attach additional pages if needed to supply the required names and addresses.

[ ] SOLE PROPRIETOR

Name _____ _____
Proprietor Address

[ ] A PARTNERSHIP

LIST EACH PARTNER HAVING EQUITY INTEREST OF 10% OR MORE OF PARTNERSHIP (IF NONE STATE "NONE")

Name _____ _____
Partner Address

Name _____ _____
Partner Address

[ ] A CORPORATION

LIST ALL DIRECTORS OF THE CORPORATION (IF NONE STATE "NONE")

Name _____ _____
Director Address

Name _____ _____
Director Address

Name _____ _____
Director Address

LIST ALL OFFICERS OF THE CORPORATION (IF NONE STATE "NONE")

Name _____ _____
Officer Address

Name _____ _____
Officer Address

Name _____ _____
Officer Address

LIST ALL INDIVIDUALS OWNING 10% OR MORE OF OUTSTANDING SHARES OF STOCK OF THE CORPORATION (IF NONE STATE "NONE")

Name _____ _____
Owner Address

Name _____ _____
Owner Address

Name _____ _____
Owner Address

I certify that I am duly authorized to submit this list on behalf of the firm, that I am associated with the firm in the capacity noted below, and that I have knowledge of the accuracy of the information provided herein.

_____
Signature

_____
Printed Name

_____
Title

Note: This list constitutes a government record as defined by § 37.01 of the Texas Penal Code.

END OF DOCUMENT

Document 00453

# BIDDER'S STATEMENT OF RESIDENCY

The City may not award a contract for general construction, services, or purchases to a Nonresident Bidder unless Nonresident's Bid is lower than the lowest Bid submitted by a responsible Texas Resident Bidder by the same amount that a Texas Resident bidder would be required to underbid the Nonresident Bidder to obtain a comparable contract in the state in which Nonresident's principle place of business is located.

1. This certifies that the Bidder, _____, is a State of Texas Resident Bidder as defined in TEX. GOVT. CODE ANN. § 2252.001(4) (Vernon 1994).

   _____ _____
   Signature Title

   "Texas Resident Bidder" means a bidder whose principal place of business is in this State, and includes a Contractor whose ultimate parent company or majority owner has its principal place of business in this State. *When bidder cannot sign 1, above, proceed to 2.*

2. a. _____ is a resident of _____ and is a Nonresident Bidder as defined in TEX. GOVT. CODE ANN. § 2252.001(3) (Vernon 1994).

   _____ _____
   Signature Title

   "Nonresident Bidder" means a bidder whose principal place of business is not in this State, but excludes a contractor whose ultimate parent company or majority owner has its principal place of business in this State.

   b. The State of _____ _____ have a state statute giving
   Bidder's resident state Does or Does Not
   preference to resident bidders.

   _____ _____
   Signature Title

   *If the answer to 2.b is that your state does have a statute giving preference to resident bidders, then you must provide a copy and proceed to 3.*

3. A copy of the State of _____ statute is attached.

   _____ _____
   Signature Title

   _____
   Date

END OF DOCUMENT

Document 00454

AFFIDAVIT OF NON-INTEREST

**BEFORE ME**, the undersigned authority, a Notary Public in and for the State of Texas, on this day personally appeared _____, who
Affiant

being by me duly sworn on his oath stated that he is _____, of
Title

_____,
Name of Firm

the firm named and referred to and in the foregoing; and that he knows of no officer, agent, or employee of the City of Houston being in any manner interested either directly or indirectly in such Contract.

_____
Affiant's Signature

SWORN AND SUBSCRIBED before me on _____.
Date

_____
Notary Public in and for the State of TEXAS

_____
Print or type name

My Commission Expires: _____
Expiration Date

END OF DOCUMENT

## Document 00455

# AFFIDAVIT OF OWNERSHIP OR CONTROL

**ORIG. DEPT.:** DEPARTMENT OF PUBLIC WORKS AND ENGINEERING **FILE/I.D. NO.:** N-000784-0001-4

**INSTRUCTION: ENTITIES USING AN ASSUMED NAME SHOULD DISCLOSE SUCH FACT TO AVOID REJECTION OF THE AFFIDAVIT. THE FOLLOWING FORMAT IS RECOMMENDED: CORPORATE/LEGAL NAME DBA ASSUMED NAME.**

**STATE OF** _____ §
§ **AFFIDAVIT OF OWNERSHIP OR CONTROL**
**COUNTY OF** _____ §

BEFORE ME, the undersigned authority, on this day personally appeared _____ [*FULL NAME*] (hereafter "Affiant"), _____ [*STATE TITLE/CAPACITY WITH CONTRACTING ENTITY*] of _____ [*CONTRACTING ENTITY'S CORPORATE/LEGAL NAME*] ("Contracting Entity"), who being by me duly sworn on oath stated as follows:

**1.** Affiant is authorized to give this affidavit and has personal knowledge of the facts and matters herein stated.

**2.** Contracting Entity seeks to do business with the City in connection with _____ [*DESCRIBE PROJECT OR MATTER*] which is expected to be in an amount that exceeds $50,000.

**3.** The following information is submitted in connection with the proposal, submission or bid of Contracting Entity in connection with the above described project or matter.

**4.** Contracting Entity is organized as a business entity as noted below (check box as applicable).

**FOR PROFIT ENTITY**:

[ ] SOLE PROPRIETORSHIP
[ ] CORPORATION
[ ] PARTNERSHIP
[ ] LIMITED PARTNERSHIP
[ ] JOINT VENTURE
[ ] LIMITED LIABILITY COMPANY
[ ] OTHER (Specify type in space below)

_____

_____

_____

**NON-PROFIT ENTITY**:

[ ] NON-PROFIT CORPORATION
[ ] UNINCORPORATED ASSOCIATION

**5.** The information shown below is true and correct for the Contracting Entity and all owners of 5% or more of the Contracting Entity and, where the Contracting Entity is a non-profit entity, the required information has been shown for each officer, *i.e.*, president, vice-president, secretary, treasurer, etc. ***[NOTE: IN ALL CASES, USE FULL NAMES, LOCAL BUSINESS AND RESIDENCE ADDRESSES AND TELEPHONE NUMBERS. DO NOT USE POST OFFICE BOXES FOR ANY ADDRESS. INCLUSION OF E-MAIL ADDRESSES IS OPTIONAL, BUT RECOMMENDED. ATTACH ADDITIONAL SHEETS AS NEEDED.]***

**Contracting Entity**

Name: _____

Business Address *[NO./STREET]* _____

*[CITY/STATE/ZIP CODE]* _____

Telephone Number (_____)_____

Email Address *[OPTIONAL]* _____

Residence Address *[NO./STREET]* _____

*[CITY/STATE/ZIP CODE]* _____

Telephone Number (_____)_____

Email Address *[OPTIONAL]* _____

**5% Owner(s) or More** (IF NONE, STATE "NONE.")

Name: _____

Business Address *[NO./STREET]* _____

*[CITY/STATE/ZIP CODE]* _____

Telephone Number (_____)_____

Email Address *[OPTIONAL]* _____

Residence Address *[NO./STREET]* _____

*[CITY/STATE/ZIP CODE]* _____

Telephone Number (_____)_____

Email Address *[OPTIONAL]* _____

6. ***Optional Information***

Contracting Entity and/or _____ [*NAME OF OWNER OR NON-PROFIT OFFICER*] is actively protesting, challenging or appealing the accuracy and/or amount of taxes levied against _____ [*CONTRACTING ENTITY, OWNER OR NON-PROFIT OFFICER*] as follows:

Name of Debtor: _____

Tax Account Nos. _____

Case or File Nos. _____

Attorney/Agent Name _____

Attorney/Agent Phone No. (_____)_____

Tax Years _____

Status of Appeal *[DESCRIBE]* _____

_____

_____

_____

Affiant certifies that he or she is duly authorized to submit the above information on behalf of the Contracting Entity, that Affiant is associated with the Contracting Entity in the capacity noted above and has personal knowledge of the accuracy of the information provided herein, and that the information provided herein is true and correct to the best of Affiant's knowledge and belief.

_____
Affiant

**SWORN TO AND SUBSCRIBED** before me this _____ day of _____, 20_____.

(Seal)

_____
Notary Public

**NOTE:**
This affidavit constitutes a **government record** as defined by Section 37.01 of the Texas Penal Code. Submission of a false government record is punishable as provided in Section 37.10 of the Texas Penal Code. Attach additional pages if needed to supply the required names and addresses.

Document 00456

# BIDDER'S CERTIFICATION OF COMPLIANCE WITH BUY AMERICAN PROGRAM (AVIATION SAFETY AND CAPACITY EXPANSION ACT OF 1990)

By submitting a bid, except for those items listed by Bidder below or on additional copies of this page, attached to this page, Bidder certifies that steel and each manufactured product, is produced in the United States (as defined in the clause Buy American - Steel and Manufactured Products for Construction Contracts) and that components of unknown origin are considered to have been produced or manufactured outside the United States. In case of conflicts with corresponding provisions of other Bidding Documents, Buy American Program provisions govern.

Bidders may obtain from the City a list of products excepted from this provision. Use additional copies of this page as required.

| PRODUCT | COUNTRY OF ORIGIN |
|---|---|
| | |
| | |
| | |
| | |
| | |
| | |
| | |
| | |
| | |
| | |
| | |
| | |
| | |

The above information is true and complete to the best of my knowledge and belief.

_____
(Printed or typed Name of Signatory)

_____ _____
Signature Date

*Note: The penalty for making false statements in offers is prescribed in 18 U.S.C. 1001.*

END OF DOCUMENT

Document 00457

Conflict of Interest Questionnaire

**********

Print out latest version of CIQ form from website listed below:

**********

Local Government Code Chapter 176 requires Bidders with the City of Houston ("City") to file a Conflict of Interest Questionnaire with the City Secretary of the City of Houston.

The Conflict of Interest Questionnaire is available for downloading on the Texas Ethics Commission's website at: http://www.ethics.state.tx.us/forms/CIQ.pdf. The completed Conflict of Interest Questionnaire will be posted on the City Secretary's website. Also you will find a list of the City Local Government Officers on the City Secretary's website.

For your convenience the CIQ form is attached as part of this document. Although the City has provided this document for the Bidders convenience, it is the Bidders responsibility to submit the latest version of the CIQ form as promulgated by the Texas Ethics Commission.

The Failure of any Bidder to comply with this law is a Class C misdemeanor.

END OF DOCUMENT

Document 00458

# BIDDER'S CERTIFICATION REGARDING FOREIGN TRADE RESTRICTIONS (49 CFR PART 30)

The undersigned certifies that Contractor (a) is not owned or controlled by one or more citizens or nationals of a foreign country included in the list of countries that discriminate against U.S. firms published by the Office of the United States Trade representative (USTR); (b) has not knowingly entered into any contract or subcontract for this project with a contractor that is a citizen or national of a foreign country on said list, or is owned or controlled directly or indirectly by one or more citizens or nationals of a foreign country on said list; (c) has not procured any product nor subcontracted for the supply of any product for use in the Work that is produced in a foreign country on said list.

*Unless the restrictions of this clause are waived by the Secretary of Transportation in accordance with 49 CFR 30.17, no contract shall be awarded to a contractor or subcontractor who is unable to certify to the above. If Contractor knowingly procures or subcontracts for the supply of any product or service of a foreign country on said list for use in the Work, the Federal Aviation Administration may direct, through the sponsor, cancellation of the Contract at no cost to the Government.*

Further, Contractor agrees that, if awarded a contract, Contractor will incorporate this provision for certification without modification in each contract and in all lower tier subcontracts. Contractor may rely upon the certification of a prospective subcontractor unless Contractor has knowledge that the certification is erroneous. Contractor shall provide immediate written notice to the City if Contractor learns that its certification or that of a Subcontractor was erroneous when submitted or has become erroneous by reason of changed circumstances. Subcontractor agrees to provide immediate written notice to Contractor, if at any time it learns that Subcontractor certification was erroneous by reason of changed circumstances.

This certification is a material representation of fact upon which reliance was placed when making the award. If it is later determined that Contractor or Subcontractors knowingly rendered an erroneous certification, the Federal Aviation Administration may direct, through the City, cancellation of the Contract or subcontract for default at no cost to the City.

Nothing contained in the foregoing shall be construed to require establishment of a system of records in order to render, in good faith, certification required by this provision. The knowledge and information of Contractor is not required to exceed that which is normally possessed by a prudent person in the ordinary course of business dealings.

*This certification concerns a matter within the jurisdiction of an agency of the United States of America and the making of a false, fictitious, or fraudulent certification may render the maker subject to prosecution under Title 18, United States Code, Section 1001.*

Certification- The above information is true and complete to the best of my knowledge and belief.

_____
(Printed or typed Name of Signatory)

_____ _____
Signature Date

*Note: The penalty for making false statements in offers is prescribed in 18 U.S.C. 1001.*

END OF DOCUMENT

Document 00459

# CONTRACTOR'S STATEMENT REGARDING PREVIOUS CONTRACTS SUBJECT TO EQUAL EMPLOYMENT OPPORTUNITY

*Section 60-1.7(b) of the Regulations of the Secretary of Labor requires each bidder or prospective prime contractor and proposed subcontractor, where appropriate, to state in the bid or at the outset of negotiations for the contract whether it has participated in any previous contract or subcontract subject to the equal opportunity clause; and if so, whether it has filed with the Joint Reporting Committee, the Director, an agency, or the former President's Committee on Equal Employment Opportunity all reports due under the applicable filing requirements. In any case in which a bidder or prospective prime contractor or proposed subcontractor which participated in a previous contract subject to Executive Order 10925, 11114. or 11246 has not filed a report due under the applicable filing documents, no contract or subcontract shall be awarded unless such contractor submits a report covering the delinquent period or such other period specified by the FAA or the Director, OFCCP.*

Contractor has __ has not __ participated in a previous contract subject to the equal opportunity clause prescribed by Executive Order 10925, or Executive Order 11114, or Executive Order 11246.

Contractor has __ has not __ submitted all compliance reports in connection with any such contract due under the applicable filing requirements; and that representations indicating submission of required compliance reports signed by proposed subcontractors will be obtained prior to award of subcontracts.

If Contractor has participated in a previous contract subject to the equal opportunity clause and has not submitted compliance reports due under applicable filing requirements, Contractor (Proposer) shall submit a compliance report on Standard Form 100, "Employee Information Report EEO-1" prior to the award of the Contract.

*Standard Form 100 is normally furnished to contractors annually, based on a mailing list currently maintained by the Joint Reporting Committee. In the event Contractor has not received the form, Contractor may obtain it by writing to the following address:*

*Joint Reporting Committee*
*1800 G Street*
*Washington, DC 20506*

_____
(Printed or typed Name of Signatory)

_____ _____
Signature Date

_____
Title

_____
Contractor's Firm Name

*NOTE: The penalty for making false statements in offers is prescribed in 18 U.S.C. 1001.*

END OF DOCUMENT

**Document 00460**
**(POP -1)**
**City of Houston**
**Pay or Play Program**
**Acknowledgement Form**

It has been determined that the project currently open for bidding meets the criteria of the City of Houston Pay or Play program. This form acknowledges your awareness of the Pay or Play program which is authorized by Ordinance 2007-534. Your signature below affirms that you will comply with the requirements of the program if you are the successful bidder/proposer, and ensure the same on behalf of subcontracts subject to the Pay or Play Program.

I declare under penalty of perjury under the laws of the State of Texas that if awarded this contract which meets the criteria for the City of Houston's Pay or Play Program, I will comply with all requirements of the Pay or Play Program in accordance with Executive Order 1-7.

***Fill out all information below and submit this form with your bid/proposal packet.**

_____
Solicitation Number

_____ _____
Signature Date

_____ _____
Print Name City Vendor ID

_____ _____
Company Name Phone Number

_____
Email Address

**Note: For more information contact your POP Liaison or the POP Contract Administrator. All contact information can be found on www.houstontx.gov →Departments→Office of Business Opportunity→Pay or Play.**

Document 00470

## BIDDER'S MWSBE PARTICIPATION PLAN

The Bidder or Proposer shall submit this completed form with the bid, to demonstrate the Bidder/Proposer's plan to meet the contract-specific MWSBE goal ("contract goal"). If the Bidder or Proposer cannot meet the contract goal, the Bidder/Proposer has the burden to demonstrate "Good Faith Efforts", which shall include correctly and accurately preparing and submitting this form, a Record of Good Faith Efforts (Document 00471), and a Request for Deviation from the Goal (Document 00472), the documentation evidencing their "Good Faith Efforts", as required by the City of Houston's Good Faith Efforts Policy (Document 00808). The City will review the Participation Plan and Good Faith Efforts at the time of bid opening. Visit http://www.houstontx.gov/obo for more information.

| Contract Goal | MBEGoal % | WBEGoal % |
|---|---|---|
| | 11% | 7% |

| Bidder's Participation Plan Percentage | SBE | MBE | WBE | Total |
|---|---|---|---|---|
| | | | | |

| NAICS Code (6 digit) | Description of Work (Plan Sheet #, Unit Price #, Scope of Work #, as applicable) | % of Total Bid Price (2 decimal places) | Cert. Type for Goal MBE, WBE, SBE) | Certified Firm Name<br>Firm Address<br>Contact Name<br>Phone No. and E-Mail (if available) |
|---|---|---|---|---|
| | | | | |
| | | | | |
| | | | | |
| | | | | |
| | | | | |
| | | | | |
| | | | | |

Signature for Company: _____ Date: _____
Print Name: _____ Phone: _____
Bidder: _____
(Print or type full name of business entity, such as corporation, LLC, etc)

I understand that supplying inaccurate information may violate Texas Penal Code Section 37.10 and lead to City sanctions.

DOCUMENT 00470

## CONTINUATION PAGE

| NAICS Code (6 digit) | Description of Work (Plan Sheet #, Unit Price #, Scope of Work #, as applicable) | % of Total Bid Price (2 decimal places) | Cert. Type for Goal MBE, WBE, SBE) | Certified Firm Name<br>Firm Address<br>Contact Name<br>Phone No. and E-Mail (if available) |
|---|---|---|---|---|
| | | | | |
| | | | | |
| | | | | |
| | | | | |
| | | | | |
| | | | | |
| | | | | |
| | | | | |
| | | | | |
| | | | | |
| | | | | |

Signature for Company: _____ Date: _____
Print Name: _____ Phone: _____
Bidder: _____
(Print or type full name of business entity, such as corporation, LLC, etc)

*I understand that supplying inaccurate information may violate Texas Penal Code Section 37.10 and lead to City sanctions.

Document 00471

# PRE-BID GOOD FAITH EFFORTS

**Bidder or Proposer Name:** _____ **Project Name**_____

A Bidder or Proposer that may be unable to complete or follow a Participation Plan (Document CCD-00470) to meet the Contract Goal in the Supplemental Conditions (Document 00800), must submit this completed form as well as a Goal Deviation Request Form (Document 00472), and any other documentation of "Good Faith Efforts" with the bid (see Document 00808). The Bidder or Prime Contractor has the burden to demonstrate "Good Faith Efforts" to meet the MWSBE goal, which includes correctly and accurately preparing and submitting this form and other efforts described in the City's Good Faith Efforts Policy (Document 00808). The Office of Business Opportunity will review Good Faith Efforts and Participation Plan after selection of an apparent low bidder.

*UNLESS THE BIDDER'S/PROPOSER'S PARTICIPATION PLAN MEETS THE CONTRACT GOAL, FAILURE TO SUBMIT THIS FORM MAY RESULT IN THE BID BEING FOUND NON-RESPONSIVE.*

| NAICS Code | Plan Item No. | MWSBE Type for Goal | Certified Firm Name Address, Phone No. and E-Mail | Certified Firm Contact Person | Method of Contact | Prime Contact Date | Certified Firm Response | Results of Contact (why suitable or not suitable for work) |
|---|---|---|---|---|---|---|---|---|
| | | | | | Phone<br>E-mail<br>Fax | | | |
| | | | | | Phone<br>E-mail<br>Fax | | | |
| | | | | | Phone<br>E-mail<br>Fax | | | |
| | | | | | Phone<br>E-mail<br>Fax | | | |

Authorized Signature: _____ Date: _____ Phone: _____

Print Name: _____ Email Address: _____

CONTINUATION PAGE

| NAICS Code | Plan Item No. | MWSBE Type for Goal | Certified Firm Name Address, Phone No. and E-Mail | Certified Firm Contact Person | Method of Contact | Prime Contact Date | Certified Firm Response | Results of Contact (why suitable or not suitable for work) |
|---|---|---|---|---|---|---|---|---|
| | | | | | Phone<br>E-mail<br>Fax | | | |
| | | | | | Phone<br>E-mail<br>Fax | | | |
| | | | | | Phone<br>E-mail<br>Fax | | | |
| | | | | | Phone<br>E-mail<br>Fax | | | |
| | | | | | Phone<br>E-mail<br>Fax | | | |
| | | | | | Phone<br>E-mail<br>Fax | | | |
| | | | | | Phone<br>E-mail<br>Fax | | | |

Authorized Signature: _____ Date: _____ Phone: _____

Print Name: _____ Email Address: _____

Document 00472

# BIDDER'S MWSBE GOAL DEVIATION REQUEST

**Bidder or Proposer Name:**_____

**Project Name & Bid/Contract #:**_____

| | MBE | WBE | SBE | Total |
|---|---|---|---|---|
| **Department Approved MWSBE Goals** | % | % | % | % |

| | MBE | WBE | SBE | Total |
|---|---|---|---|---|
| **Bidder's Proposed MWSBE Goals** | % | % | % | % |

**Justification:** Please provide the reason the Bidder is unable to meet the Contract Goal in Form 00800.

_____

_____

_____

**Good Faith Efforts:** Please list any efforts not listed in the Bidder's Good Faith Effort Report (Form 00471).

_____

_____

_____

_____

Date:_____ Bidder: _____

Email:_____ By: _____

Phone Number: _____ Title: _____

**FOR OFFICIAL USE ONLY:** Approved ☐ Not Approved ☐

OBO Representative Date:_____

_____ Title: _____

Document 00495

# POST-BID PROCEDURES

## 1.0 DOCUMENT ADDRESSES

A. Notice of Intent to Award

B. Monitoring Authority/Contracting Department

C. Requirements of Bidder

D. Failure of Bidder to comply with requirements

E. Notice to Proceed

## 2.0 NOTICE OF INTENT TO AWARD

A. The City will provide written Notice of Intent to Award to Low Bidder.

## 3.0 DEFINITIONS

A. The "Monitoring Authority" or "OBO" for this Project is:

Director, Office of Business Opportunity Division
**City of Houston**
611 Walker Street, 7th Floor
**Houston, Texas 77002**

B. The "Contracting Department" for this Project is:
Director, Department of DEPARTMENT OF PUBLIC WORKS AND ENGINEERING
City of Houston
611 Walker Street
Houston, Texas 77002
ATTN: **Stephen M. Campagna,**

## 4.0 REQUIREMENTS OF BIDDER

A. Within10 days of receipt of Notice of Intent to Award, Low Bidder shall execute and deliver to Stephen M. Campagna, Project Manager and Monitoring Authority, for the City's approval, documents indicated by an "X" below:
[ ] Document 00570 – Revised MWSBE Participation Plan *(Do not submit if OBO Director approved Bidder's Plan – Document 00470)*

[ X ] Executed Subcontract(s), Letter(s) of Intent, or documentation of good faith efforts to meet the MWSBE goals

B. Within 10 days of receipt of Notice of Intent to Award, Low Bidder shall execute and deliver to Stephen M. Campagna, Project Manager for the City's approval, documents indicated by an "X" below:

[ ] Document 00500 - Form of Business
[ X ] Document 00501 - Resolution of Contractor
[ X ] Document 00520 - Agreement
[ X ] Document 00600 - List of Proposed Subcontractors and Suppliers
[ X ] Document 00601 - Drug Policy Compliance Agreement
[ X ] Document 00602 - Contractor's Drug-free Workplace Policy *(Contractor creates this document.)*
[ X ] Document 00604 - History of OSHA Actions and List of On-the-job Injuries
[ X ] Document 00605 - List of Safety Impact Positions *(Contractor completes this list. Do not submit if submitting Document 00606.)*
[ ] Document 00606 - Contractor's Certification of No Safety Impact Positions *(Do not submit if submitting Document 00605.)*
[ ] Document 00607 - Certification Regarding Debarment, Suspension, and Other Responsibility Matters
[ ] Document 00608 - Contractor's Certification Regarding Non-segregated Facilities for Project Funded by AIP Grant
[ X ] Document 00610 - Performance Bond
[ X ] Document 00611 - Statutory Payment Bond
[ X ] Document 00612 - One-year Maintenance Bond
[ X ] Document 00613 - One-year Surface Correction Bond
[ X ] Document 00620 - Affidavit of Insurance *(with Certificate of Insurance attached)*
[ X ] Document 00622 - Name and Qualifications of Proposed Superintendent *(Contractor creates this document.)*
[ ] Document 00623 - Contractor's Act of Assurance (SRF Form ED-103)
[ X ] Document 00624 - Affidavit of Compliance with S/WMBE Program
[ ] Document 00625 - SRF Participation Summary
[ ] Document 00626 - SRF Affirmative Steps Solicitation Report
[ ] Document 00627 - SRF Prime Contractor Affirmative Steps Certification and Goals
[ ] Document 00629 - Affidavit for FAA Form 7460-1
[ X ] Document 00630 - Certification of Compliance with Pay or Play Program
[ X ] Document 00631 - City of Houston Pay or Play Program – List of Subcontractors
[ ] Document 00809 – CDBG Requirements for Federally Funded Projects

**C.** Within 10 days of receipt of Notice of Intent to Award, Low Bidder shall execute the following forms and deliver them directly to the Monitoring Authority.

1. Original forms contained in Document 00805 – Equal Employment Opportunity Program Requirements:
   *[ X ] Pages 00805-3 to 00805-5, Certification by Bidder Regarding Equal*

*Employment Opportunity*

[ X ] *Page 00805-6, Total Work Force Composition of the Company, or copy of latest EEO-1 form (required only if Contractor has a work force of 50 or more people and the Original Contract Price is $50,000 or more)*

[ X ] *Page 00805-7, Equal Employment Opportunity Compliance Program*

[ X ] *Page 00805-26, Certification by Proposed Subcontractor Regarding Equal Employment Opportunity*

[ X ] *Page 00805-29, Certification by Proposed Material Supplier, Lessor, and Professional Service Providers Regarding Equal Employment Opportunity*

2. Original completed form Document 00633 - Certification by Proposed Material Suppliers, Lessors, and Professional Service Providers Regarding Equal Employment Opportunity, for each proposed material supplier and equipment supplier.

3. Original forms contained in Document 00820 – Wage Scale for Engineering Construction.

[ X ] *Certificate from Contractor Appointing Officer or Employee to Supervise Payment of Employees*

[ ] *Certificate from SubContractor Appointing Officer or Employee to Supervise Payment of Employees*

[ ] Document 00812, Exhibit "A" – Certificate from Contractor Appointing Officer or Employee to Supervise Payment of Employees

D. Designations of Subcontractors and Suppliers, who have been selected by Bidder in Document 00600 - List of Proposed Subcontractors and Suppliers, and accepted by the City, may be changed only with prior notice and acceptance by Project Manager as provided in Conditions of the Contract. For each Product Supplier subsequently added or substituted, provide an original completed form, Document 00633 - Certification by Proposed Material Suppliers, Lessors, and Professional Service Providers Regarding Equal Employment Opportunity, directly to the Monitoring Authority.

E. On Bidder's written request, Stephen M. Campagna, Project Manager may grant an extension of time, not to exceed 5 days, to furnish documents specified in Paragraphs 4.0.A and 4.0.B. If Bidder is required to resubmit documents specified in Paragraph 4.0.A or 4.0.B, Bidder shall do so within time limits provided in the request for resubmission.

F. Designations of Subcontractors and Suppliers, who have been selected by Bidder in its Participation Plan, and accepted by the City, may be changed only with prior notice and acceptance by the Monitoring Authority as provided in Document 00808 – Bidder/Contractor Requirements for the City of Houston Minority, Women, and Small Business Enterprise (MWSBE), and Persons with Disabilities Business Enterprise (PDBE).

## 5.0 FAILURE OF BIDDER TO COMPLY WITH REQUIREMENTS

A. Should Bidder, on receipt of Notice of Intent to Award, fail to comply with requirements of this Document 00495 within stated time, the City may declare award in default and require forfeiture of the Security Deposit.

B. After the City's written notice of default to Low Bidder, the City may award the Contract to Bidder whose offer is the next lowest bid, and Security Deposit of Bidder in default shall be forfeited to the City in accordance with provisions of Document 00200 - Instructions to Bidders.

6.0 NOTICE TO PROCEED

A. Upon the City's execution of the Agreement and delivery to Contractor, City Engineer will give Document 00551 - Notice to Proceed to Contractor, which establishes Date of Commencement of the Work.

**END OF DOCUMENT**

Document 00500

# FORM OF BUSINESS

Please mark the box describing your firm's form of business, fill in the requested information, and include the relevant attachments.

[ ] **Corporation**
Corporate Name: _____
State of Incorporation: _____
Mailing Address: _____, _____
Type of Corporation: _____

Certificate of Assumed Name, if operating under a name different than that on the corporate charter (the Certificate must have been issued within the past 10 years to be valid)

*Certificate of Good Standing

*Certificate of Existence (if non-Texas corporation, Certificate of Authority)

[ ] **Partnership/Joint Venture**
Partnership/Joint Venture Name: _____
Mailing Address: _____, _____
Type of Partnership/Joint Venture: _____

Copy of the Partnership or Joint Venture Agreement, **or**
Affidavit with the name of the partnership or joint venture, the names of the individual partners or participants in the joint venture, and a statement that the partnership or joint venture is in existence

Certificate of Assumed Name, (the Certificate must have been issued within the past 10 years to be valid)

If firm is a limited partnership, the Certificate of Limited Partnership

If any partner or joint venturer is a corporation, the above information relating to corporation must be included as to each sum partner or joint venturer.

[ ] **Sole Proprietorship**

Name: _____
Mailing Address: _____

Certificate of Assumed Name, if operating under a name different than that of the sole proprietor (the Certificate must have been issued within the past 10 years to be valid)

** Must be furnished upon request of the Director and must be less than 90 days old.*

END OF DOCUMENT

Document 00501

## RESOLUTION OF CONTRACTOR

_____ ("Contractor"),
(Name of Contractor, e.g., "Biz. Inc.", "Biz LLP")

is a _____,
(Type of Organization, e.g.: Corporation, Limited Partnership, Limited Liability Partnership, Limited Liability Company, etc.)

which is bound by acts of _____,
(Name and Form of Governing Entity, e.g., "Biz Inc. Board of Directors", "Bill Smith, GP", etc.)

("Governing Entity").

On the _____ day of _____, 20__, the Governing Entity resolved, in accordance with all documents, rules, and laws applicable to the Contractor, that

_____, is authorized to act as the
(Contractor's Representative)

Contractor's Representative in all business transactions (initial one) ____ conducted in the State of Texas OR ____ related to this Contract; and

The Governing Entity warrants that the above resolution (a) was entered into without dissent or reservation by the Governing Entity, (b) has not been rescinded or amended, and (c) is now in full force and effect; and

In authentication of the adoption of this resolution, I subscribe my name on this day of _____, 20___.

_____ _____
(Authorized Signature for Governing Entity) (Print or Type Name and Title of Authorized Signatory)

**SWORN AND SUBSCRIBED** before me on _____
Date

_____
Notary Public in and for the State of Texas

My Commission Expires: _____ _____
Expiration Date Print or Type Name of Notary Public

Document 00520

# AGREEMENT

**Project:** Buffalo Speedway Paving and Drainage: Holmes Road to West Airport

**Project Location:** Buffalo Speedway is generally bounded by Willowbend Boulevard on the north, West Airport on the south, Hiram Clarke on the west and Almeda Road on the east.(Key Map No. 532X, 572B and 572F)

**Project No:** WBS No. N-000784-0001-4

**The City:** THE CITY OF HOUSTON, 900 Bagby Street, Houston, Texas 77002 (the "City")

and

**Contractor:** _____

(Address for Written Notice) _____

_____

**Fax Number:** _____ **Phone Number:** _____

**City Engineer, with respect to Sections 4.3 thru 4.5 of the General Conditions, is:**

J. Timothy Lincoln, P.E. (or his successor)

P. O. Box 1562, Houston, Texas 77251-1562 (Address for Written Notice)

**City Engineer, with respect to all other terms of the General Conditions, is:**

Joseph T. Myers, P.E. (or his successor)

**Fax Number:** (832) 395-2410

**THE CITY AND CONTRACTOR AGREE AS FOLLOWS:**

## ARTICLE 1
## THE WORK OF THE CONTRACT

1.1 Contractor shall perform the Work in accordance with the Contract.

## ARTICLE 2
## CONTRACT TIME

2.1 Contractor shall achieve Date of Substantial Completion within **442** days after Date of Commencement of the Work, subject to adjustments of Contract Time as provided in the Contract.

2.2 The Parties recognize that time is of the essence for this Agreement and that the City will suffer financial loss if the Work is not completed within the Contract Time. Parties also recognize delays, expense, and difficulties involved in proving in a legal or arbitration proceeding actual loss suffered by the City if the Work is not completed on time. Accordingly, instead of requiring any such proof, the Parties agree that as

liquidated damages for delay (but not as a penalty), Contractor shall pay the City the amount stipulated in Document 00800 – Supplementary Conditions, for each day beyond Contract Time.

## ARTICLE 3
## CONTRACT PRICE

3.1 Subject to terms of the Contract, the City will pay Contractor in current funds for Contractor's performance of the Contract, Contract Price of $ which includes Alternates, if any, accepted below.

3.2 The City accepts Alternates as follows:

**********
*Delete or add lines below to indicate all Alternates that were included in Request for competative sealed proposals. Remove brackets and instructions when done. Change color of remaining text to black.*
**********

Alternate No. 1 [*Accepted or Not Accepted*]
Alternate No. 2 [*Accepted or Not Accepted*]
Alternate No. 3 [*Accepted or Not Accepted*]
Alternate No. 4 [*Accepted or Not Accepted*]

## ARTICLE 4
## PAYMENTS

4.1 The City will make progress payments to Contractor as provided below and in Conditions of the Contract.

4.2 The Period covered by each progress payment is one calendar month ending on the [___] 15th or [___] last day of the month.

4.3 The City will issue Certificates for Payment and will make progress payments on the basis of such Certificates as provided in Conditions of the Contract.

4.4 Final payment, constituting entire unpaid balance of Contract Price, will be made by the City to Contractor as provided in Conditions of the Contract.

## ARTICLE 5
## CONTRACTOR REPRESENTATIONS

5.1 Contractor represents:

5.1.1 Contractor has examined and carefully studied Contract documents and other related data identified in Request For or Competitive Sealed Proposals or Competitive Sealed Bids.

5.1.2 Contractor has visited the site and become familiar with and is satisfied as to general, local, and site conditions that may affect cost, progress, and performance of the Work.

5.1.3 Contractor is familiar with and is satisfied as to all federal, state, and local laws and regulations that may affect cost, progress, and performance of the Work.

5.1.4 Contractor has carefully studied all: (1) reports of explorations and tests of subsurface conditions at or contiguous to the site and all drawings of physical conditions in or relating to existing surface or subsurface structures at or contiguous to the site (except Underground Facilities) which have been identified in Contract documents and (2) reports and drawings of a hazardous environmental condition, if any, at the site which has been identified in Contract documents.

5.1.5 Contractor has obtained and carefully studied (or assumes responsibility for having done so) all additional or supplementary examinations, investigations, explorations, tests, studies, and data concerning conditions (surface, subsurface, and Underground Facilities) at or contiguous to the site which may affect cost, progress, or performance of the Work or which relate to any aspect of the means, methods, techniques, sequences, and procedures of construction to be employed by Contractor, including applying specific means, methods, techniques, sequences, and procedures of construction, if any, expressly required by the Contract to be employed by Contractor, and safety precautions and programs incident thereto

5.1.6 Contractor does not consider that any further examinations, investigations, explorations, tests, studies, or data are necessary for performance of the Work at Contract Price, within Contract Time, and in accordance with the Contract.

5.1.7 Contractor is aware of general nature of work to be performed by the City and others at the site that relates to the Work as indicated in Contract documents.

5.1.8 Contractor has correlated information known to Contractor, information and observations obtained from visits to the site, reports and drawings identified in the Contract, and all additional examinations, investigations, explorations, tests, studies, and data with the Contract.

5.1.9 Contractor has given City Engineer written notice of all conflicts, errors, ambiguities, or discrepancies that Contractor has discovered in the Contract, and written resolution thereof by City Engineer is acceptable to Contractor.

5.1.10 Contract documents are generally sufficient to indicate and convey understanding of all terms and conditions for performance and furnishing of the Work.

## ARTICLE 6
## MISCELLANEOUS PROVISIONS

6.1 The Contract may be terminated by either Party as provided in Conditions of the Contract.

6.2 The Work may be suspended by the City as provided in Conditions of the Contract.

## ARTICLE 7
## ENUMERATION OF CONTRACT DOCUMENTS

7.1 The following documents are incorporated into this Agreement:

7.1.1 Document 00700 - General Conditions.

7.1.2 Document 00800 - Supplementary Conditions.

7.1.3 Division 01 - General Requirements.

7.1.4 Divisions 02 through 16 of Specifications.

7.1.5 Drawings listed in Document 00015 - List of Drawings. Drawing No. N/A and bound separately.

7.1.6 Addenda [and Riders] which apply to the Contract, are as follows:

Addendum No. 1, dated N/A

Addendum No. 2, dated N/A

Addendum No. 3, dated N/A

Rider No. [___], dated N/A

7.1.7 Other documents:

| | Document No. | Title |
|---|---|---|
| [ X ] | 00410B | Bid Form – Part B |
| [ X ] | 00470 | Standard Pre-Bid Participation Plan Document |
| [ ] | 00471 | Pre-Bid Good Faith Efforts Report |
| [ ] | 00472 | Goal Deviation Request |
| [ ] | 00500 | Form of Business |
| [ X ] | 00501 | Resolution of Contractor (if a corporation) |
| [ ] | 00570 | Amended S/MWBE Participation Plan |
| [ ] | 00571 | Contractor's Good Faith Efforts Report |
| [ ] | 00572 | Plan Deviation Request |
| [ ] | 00608 | Contractor's Certification Regarding Non-Segregated Facilities for Project Funded by AIP Grant |
| [ X ] | 00610 | Performance Bond |
| [ X ] | 00611 | Statutory Payment Bond |
| [ X ] | 00612 | One-year Maintenance Bond |
| [ X ] | 00613 | One-year Surface Correction Bond |
| [ X ] | 00620 | Affidavit of Insurance (with the Certificate of Insurance attached) |
| [ ] | 00623 | Contractor's Act of Assurance (SRF Form ED-103) |
| [ X ] | 00624 | Affidavit of Compliance with Affirmative Action Program |
| [ ] | 00628 | Affidavit of Compliance with Disadvantaged Business Enterprise (DBE) Program for Project Funded By AIP Grant |
| [ X ] | 00630 | (POP-2) Certification of Compliance with Pay or Play Program |
| [ X ] | 00631 | (POP-3) City of Houston Pay or Play Program – List of Subcontractors |
| [ X ] | 00800 | Supplementary Conditions for Project CIP or AIP Funded |
| [ ] | 00801 | Supplementary Conditions for Project AIP Funded |
| [ ] | 00802 | SRF Supplementary Conditions |
| [ X ] | 00805 | Equal Employment Opportunity Program Requirements |
| [ ] | 00806 | EPA DBE and Wage Rate Requirements (SRF only) |
| [ ] | 00807 | Bidder/Contractor Requirements for DBE Program |
| [ X ] | 00808 | Minority and Women-owned Business Enterprise (MWBE) & Persons with Disabilities Business Enterprise (PDBE) Program |
| [ ] | 00810 | Federal Wage Rate - Highway |
| [ ] | 00811 | Federal Wage Rate - Building |
| [ ] | 00812 | Federal Wage Rate - Heavy |
| [ X ] | 00820 | Wage Rate for Engineering Construction |
| [ ] | 00821 | Wage Rate for Building Construction |
| [ X ] | 00830 | Trench Safety Geotechnical Information |
| [ X ] | 00840 | Pay or Play Program |
| [ ] | 00912 | Rider |

## ARTICLE 8
## SIGNATURES

8.1 This Agreement is executed in two original copies and is effective as of the date of countersignature by City Controller.

**CONTRACTOR:**

By: _____

Name: _____

Title: _____

Date: _____

Tax Identification Number: _____

(If Joint Venture)

By: _____

Name: _____

Title: _____

Date: _____

Tax Identification Number: _____

**CITY OF HOUSTON, TEXAS**

APPROVED:

By: _____
Director,
Department of Public Works and Engineering

SIGNED:

By: _____
Mayor

COUNTERSIGNED:

By: _____
City Controller

Date Countersigned:

_____

ATTEST/SEAL:

By: _____
City Secretary

8.2 This Contract and Ordinance have been reviewed as to form by the undersigned legal assistant and have been found to meet established Legal Department criteria. Legal Department has not reviewed the content of these documents.

_____ _____
Legal Assistant Date

END OF DOCUMENT

Document 00570

## CONTRACTOR'S REVISED MWSBE PARTICIPATION PLAN

As soon as the Contractor becomes aware that the Contractor may not abide by the most current approved Plan, the Contractor shall submit this completed form with a Record of Post-Bid Good Faith Efforts (Document 00571), a Request for Plan Deviation (Document 00572), and any other document evidencing "Good Faith Efforts", as required by the Good Faith Efforts Policy (Document 00808). The City will review this Revised Participation Plan and may approve this Revised Plan if the Contractor has made Good Faith Efforts. For more information, visit http://www.houstontx.gov/obo.

| **Original Participation Plan Percentage** | MBE | WBE | SBE |
|---|---|---|---|
| | | | |

| **Revised Participation Plan Percentage** | MBE | WBE | SBE |
|---|---|---|---|
| | | | |

| NAICS Code (6 digit) | Description of Work (Plan Sheet #, Unit Price #, Scope of Work #, as applicable) | % of Total Bid Price (2 decimal places) | Cert. Type for Goal (MBE, WBE, SBE) | Certified Firm Name<br>Firm Address<br>Contact Name<br>Phone No. and E-Mail (if available) |
|---|---|---|---|---|
| | | | | |
| | | | | |
| | | | | |
| | | | | |
| | | | | |
| | | | | |

Signature for Company: _____* Date: _____
Print Name: _____ Phone: _____

*I understand that supplying inaccurate information may violate Texas Penal Code Section 37.10 and lead to City sanctions.

Document 00570

## CONTINUATION PAGE

| NAICS Code (6 digit) | Plan Item Number (if applicable)/ Description of Work | % of Total Bid Price (2 decimal places) | Cert. Type for Goal (MBE, WBE, SBE) | Certified Firm Name Firm Address Contact Name Phone No. and E-Mail (if available) |
|---|---|---|---|---|
| | | | | |
| | | | | |
| | | | | |
| | | | | |
| | | | | |
| | | | | |
| | | | | |
| | | | | |
| | | | | |
| | | | | |

Signature for Company: _____* Date: _____
Print Name: _____ Phone: _____

understand that supplying inaccurate information may violate Texas Penal Code Section 37.10 and lead to City sanctions.

Document 00571

# RECORD OF POST-AWARD GOOD FAITH EFFORTS

**Contractor Name:** _____ **Project Name:** _____

A Contractor that may be unable to follow an agreed Participation Plan (Document 00470 or 00570) must submit this completed form, a Plan Deviation Request Form (Document 00572), and any other documentation of "Good Faith Efforts" (see Document 00808) that the OBO Representative may require. The Contractor shall submit one completed Document 00571 (Part A) for each Certified Firm that is no longer performing part or all of its work duties under the Approved Plan. The Contractor has the burden to demonstrate "Good Faith Efforts" to meet the MWSBE goal, which includes correctly and accurately preparing and submitting this form and other efforts described in the Good Faith Efforts Policy (Document 00808). The Office of Business Opportunity may review Participation Plan and Good Faith Efforts from time to time and may request that the Contractor submit this form and other information.

*UNLESS THE CONTRACTOR MEETS THE GOALS IN THE AGREED PARTICIPATION PLAN, FAILURE TO SUBMIT THIS FORM MAY RESULT IN A DEFAULT OF THE CONTRACT.*

## PART A (REASON FOR NON-USE OF CERTIFIED FIRM IN AGREED PLAN)

| NAICS Code | Plan Item No. | MWSBE Type for Goal | Certified Firm Name, Address, Phone No. and E-mail | Plan Goal & Actual Use (in % of total) | Method of Contact | Reason for Non-Use (why the Contractor was not able to use the Certified Firm in accordance with the Agreed Plan) |
|---|---|---|---|---|---|---|
| | | | | Plan %: ____<br>Actual %: ____ | Phone<br>E-mail<br>Fax | |

## PART B (REASON FOR NONUSE OF REPLACEMENT CERTIFIED FIRMS—IF APPLICABLE)

| NAICS Code | Plan Item No. | MWSBE Type for Goal | Certified Firm Name Address, Phone No. and E-Mail | Certified Firm Contact Person | Method of Contact | Prime Contact Date | Certified Firm Response | Results of Contact (why Certified Firm was unsuitable or unusable) |
|---|---|---|---|---|---|---|---|---|
| | | | | | Phone<br>E-mail<br>Fax | | | |
| | | | | | Phone<br>E-mail<br>Fax | | | |

Authorized Signature: _____ Date: _____ Phone: _____

Print Name: _____ Email Address: _____

Document 00571

## PART B CONTINUATION (REASON FOR NONUSE OF REPLACEMENT CERTIFIED FIRMS)

| NAICS Code | Plan Item No. | MWSBE Type for Goal | Certified Firm Name Address, Phone No. and E-Mail | Certified Firm Contact Person | Method of Contact | Prime Contact Date | Certified Firm Response | Results of Contact (why Certified Firm was unsuitable or unusable) |
|---|---|---|---|---|---|---|---|---|
| | | | | | Phone<br>E-mail<br>Fax | | | |
| | | | | | Phone<br>E-mail<br>Fax | | | |
| | | | | | Phone<br>E-mail<br>Fax | | | |
| | | | | | Phone<br>E-mail<br>Fax | | | |
| | | | | | Phone<br>E-mail<br>Fax | | | |
| | | | | | Phone<br>E-mail<br>Fax | | | |
| | | | | | Phone<br>E-mail<br>Fax | | | |
| | | | | | Phone<br>E-mail<br>Fax | | | |

Authorized Signature: _____ Date: _____ Phone: _____

Print Name: _____ Email Address: _____

Document 00572

# CONTRACTOR'S REQUEST FOR PLAN DEVIATION

**Contractor Name:**_____

**Project Name:**_____

| **Approved Participation Plan Percentages** | **MBE** | **WBE** | **SBE** | **Total** |
|---|---|---|---|---|
| | % | % | % | % |

| **Contractor's Requested Participation Plan** | **MBE** | **WBE** | **SBE** | **Total** |
|---|---|---|---|---|
| | % | % | % | % |

**Justification:** Please provide the reason the Contractor is unable to meet the MWSBE goal in the Approved Plan.

_____

_____

_____

**Good Faith Efforts:** Please list any efforts not listed in Contractor's Record of Good Faith Effort (Document 00571).

_____

_____

_____

_____

Please attach additional pages if the space for Justification or Good Faith Efforts is insufficient.

Date:_____ *Contractor:_____

E-mail: _____ *By:_____

Phone Number:_____ Title:_____

*I understand that the approval of this deviation request does not constitute a final decision by OBO that Contractor has used Good Faith Efforts in meeting the Contracting Goal.

**FOR OFFICIAL USE ONLY:** Approved ☐ Not Approved ☐

OBO Representative Date:_____

_____ Title: _____

Document 00600

# LIST OF PROPOSED SUBCONTRACTORS AND SUPPLIERS

PROJECT NAME: Buffalo Speedway Paving and Drainage: Holmes Road to West Airport
TOTAL DBE AWARD: $ _____
ORIG. CONTRACT PRICE: $ _____ TOTAL MWSBE AWARD: $ _____
PROJECT NO.: WBS No. N-000784-0001-4 TOTAL HUB AWARD: $ _____
DATE OF REPORT: _____ TOTAL PDBE AWARD: $ _____

| NAICS (6 digits) | SUBCONTRACTOR OR SUPPLIER (INCLUDE "MWSBE", "PDBE", "DBE", OR "HUB" DESIGNATION)[2] | ADDRESS | SCOPE OF WORK[3] |
|---|---|---|---|
| | | | |
| | | | |
| | | | |
| | | | |
| | | | |
| | | | |
| | | | |
| | | | |
| | | | |
| | | | |

**NOTES:**
1. RETURN FOR ALL PROJECTS AS REQUIRED IN DOCUMENT 00800 – SUPPLEMENTARY CONDITIONS. RETURN WITHIN THE SPECIFIED NUMBER OF DAYS AFTER RECEIPT OF NOTICE OF INTENT TO AWARD
2. DESIGNATE FIRMS CERTIFIED BY THE CITY OFFICE OF BUSINESS OPPORTUNITY ON THIS FORM.
3. DESCRIBE THE WORK TO BE PERFORMED, FOR WHICH THE FIRM IS CERTIFIED, SUCH AS "PAVING", "ELECTRICAL", ETC.
4. **CONTRACTOR SHALL EXECUTE CONTRACTS WITH APPROVED SUBCONTRACTORS AND SUPPLIERS WITHIN 30 DAYS AFTER THE DATE OF THE NOTICE TO PROCEED. COPIES OF CONTRACTS WITH DESIGNNATED FIRMS MUST BE SENT TO THE OFFICE OF BUSINESS OPPORTUNITY.**

SIGNATURE: _____ COMPANY NAME: _____

NAME: _____ TITLE: _____
(Type or Print)

Document 00600

Continuation Page

PROJECT NAME: Buffalo Speedway Paving and Drainage: Holmes Road to West Airport
DATE OF REPORT: _____
PROJECT NO.: WBS No. N-000784-0001-4

| NAICS (6 digits) | SUBCONTRACTOR OR SUPPLIER (INCLUDE "MWSBE", "PDBE", "DBE", OR "HUB" DESIGNATION)[2] | ADDRESS | SCOPE OF WORK[3] |
|---|---|---|---|
| | | | |
| | | | |
| | | | |
| | | | |
| | | | |
| | | | |
| | | | |
| | | | |
| | | | |
| | | | |
| | | | |
| | | | |
| | | | |
| | | | |

SIGNATURE: _____ COMPANY NAME: _____

NAME: _____ TITLE: _____
(Type or Print)

END OF DOCUMENT

Document 00601

# DRUG POLICY COMPLIANCE AGREEMENT

I, _____ _____,
Name Title

of _____
Contractor

have authority to bind Contractor with respect to its Bid, Proposal, or performance of any and all contracts it may enter into with the City of Houston; and that by making this Agreement, I affirm that Contractor is aware of and by the time the Contract is awarded will be bound by and agree to designate appropriate safety impact positions for company employee positions, and to comply with the following requirements before the City issues a Notice to Proceed:

1. Develop and implement a written Drug Free Workplace Policy and related drug testing procedures for Contractor that meet the criteria and requirements established by the Mayor's Amended Policy on Drug Detection and Deterrence (Mayor's Drug Policy) and the Mayor's Drug Detection and Deterrence Procedures for Contractors (Executive Order No. 1-31).

2. Obtain a facility to collect urine samples consistent with Health and Human Services (HHS) guidelines and an HHS-certified drug-testing laboratory to perform drug tests.

3. Monitor and keep records of drug tests given and results; and upon request from the City of Houston, provide confirmation of such testing and results.

4. Submit semi-annual Drug Policy Compliance Declarations.

I affirm on behalf of Contractor that full compliance with the Mayor's Drug Policy and Executive Order No. 1-31 is a material condition of the Contract with the City of Houston,

I further acknowledge that falsification, failure to comply with or failure to timely submit declarations or documentation in compliance with the Mayor's Drug Policy or Executive Order No. 1-31 will be considered a breach of the Contract with the City and may result in non-award or termination of the Contract by the City.

_____ _____
Contractor Title

_____ _____
Signature Date

END OF DOCUMENT

Document 00604

# HISTORY OF OSHA ACTIONS AND LIST OF ON-THE-JOB INJURIES

Prior to award of the Contract, Low Bidder will be required to file the following with the City:

1. A history of all OSHA actions, advisories, etc., Contractor has received on all jobs worked in any capacity, prime or subcontractor. The history shall be for the two-year period preceding the Bid Date of the Project.

2. A list of all on-the-job injuries, accidents, and fatalities suffered by any present or former employees of Contractor during the same two-year period.

3. If less than the two-year period, give the date Contractor started doing business.

This information must be submitted to the City within the time period stated in Document 00498 - Notice of Intent to Award. An officer of the company must certify in a notarized statement that the information submitted is true and correct.

END OF DOCUMENT

Document 00605

# LIST OF SAFETY IMPACT POSITIONS

**********

*Contractor is to provide a complete List of Employee Classifications that are considered in a "Safety Impact Position" and the number of employees in each of those classifications.*

**********

| **Employee Classification** | **Number of Employees** |
|---|---|
| | |
| | |
| | |
| | |
| | |
| | |
| | |
| | |
| | |
| | |
| | |
| | |
| | |
| | |
| | |
| | |
| | |
| | |
| | |
| | |
| | |
| | |
| | |
| | |
| | |
| | |
| | |
| | |
| | |

END OF DOCUMENT

Document 00606

CONTRACTOR'S CERTIFICATION OF
NO SAFETY IMPACT POSITIONS IN PERFORMANCE OF A CITY CONTRACT

**BEFORE ME**, the undersigned authority, on this day personally appeared

_____,
Affiant

who being by me duly sworn on his oath stated that he is _____
Title

of _____
Contractor

and that no employee safety impact positions, as defined in §5.17 of Executive Order No. 1-31, will be involved in performing _____.
Project

Contractor agrees and covenants that it shall immediately notify the City of Houston Director of Personnel if any safety impact positions are established to provide services in performing this City Contract.

_____
Affiant's Signature

SWORN AND SUBSCRIBED before me on this day of _____, 20___.

_____
Notary Public in and for the State of TEXAS

_____
Print or Type Notary Public Name

My Commission Expires: _____
Expiration Date

END OF DOCUMENT

Document 00607

# CERTIFICATION REGARDING DEBARMENT, SUSPENSION, AND OTHER RESPONSIBILITY MATTERS

Contractor certifies to the best of its knowledge and belief that it and its principals:

1. Are not presently debarred, suspended, proposed for debarment, declared ineligible, or voluntarily excluded from covered transactions by any Federal, State, or local department or agency;

2. Have not within a three-year period preceding this proposal been convicted of or had a civil judgment rendered against them for commission of fraud or a criminal offense in connection with obtaining, attempting to obtain, or performing a public (Federal, State, or local) transaction or contract under a public transaction: violation of Federal or State antitrust statutes or commission of embezzlement, theft, forgery, bribery, falsification or destruction of records, making false statements, or receiving stolen property;

3. Are not presently indicted for or otherwise criminally or civilly charged by a government entity (Federal, State, or local) with commission of any of the offenses enumerated in paragraph 2 of this certification; and

4. Have not within a three-year period preceding this application/proposal had one or more public transactions (Federal, State, or local) terminated for cause or default.

I understand that a false statement on this certification may be grounds for rejection of this proposal or termination of the award. In addition, under 18 USC Section 1001, a false statement may result in a fine of up to $10,000 or imprisonment for up to five years, or both.

Company:

_____
Typed Name & Title of Authorized Representative

_____ _____
Signature of Authorized Representative Date

☐ I am unable to certify the above statements. My explanation is attached.

END OF DOCUMENT

Document 00610

PERFORMANCE BOND

**THAT WE**, _____, as Principal, (the "Contractor"), and the other subscriber hereto, _____, as Surety, do hereby acknowledge ourselves to be held and firmly bound to the City of Houston (the "City"), a municipal corporation, in the penal sum of $_____ for the payment of which sum, well and truly to be made to the City, its successors and assigns, Contractor and Surety do bind themselves, their heirs, executors, administrators, successors and assigns, jointly and severally.

**THE CONDITIONS OF THIS OBLIGATION ARE SUCH THAT:**

**WHEREAS**, the Contractor has on or about this day executed a Contract in writing with the City for _____
_____,
all of such work to be done as set out in full in said Contract documents therein referred to and adopted by the City Council, all of which are made a part of this instrument as fully and completely as if set out in full herein.

**NOW THEREFORE**, if the said Contractor shall faithfully and strictly perform the Contract in all its terms, provisions, and stipulations in accordance with its true meaning and effect, and in accordance with the Contract documents referred to therein and shall comply strictly with each and every provision of the Contract and with this Bond, then this obligation shall become null and void and shall have no further force and effect; otherwise the same is to remain in full force and effect. Should the Contractor fail to faithfully and strictly perform the Contract in all its terms, including but not limited to the indemnifications thereunder, the Surety shall be liable for all damages, losses, expenses and liabilities that the City may suffer in consequence thereof, as more fully set forth herein.

It is further understood and agreed that the Surety does hereby relieve the City or its representatives from the exercise of any diligence whatever in securing compliance on the part of the Contractor with the terms of the Contract, and the Surety agrees that it shall be bound to take notice of and shall be held to have knowledge of all acts or omissions of the Contractor in all matters pertaining to the Contract. The Surety understands and agrees that the provision in the Contract that the City will retain certain amounts due the Contractor until the expiration of 30 days from the acceptance of the Work is intended for the City's benefit, and the City will have the right to pay or withhold such retained amounts or any other amount owing under the Contract without changing or affecting the liability of the Surety hereon in any degree.

It is further expressly agreed by Surety that the City or its representatives are at liberty at any time, without notice to the Surety, to make any change in the Contract documents and in the Work to be done thereunder, as provided in the Contract, and in the terms and conditions thereof, or to make any change in, addition to, or deduction from the Work to be done thereunder; and that such changes, if made, shall not in any way vitiate the obligation in this Bond and undertaking or release the Surety therefrom.

It is further expressly agreed and understood that the Contractor and Surety will fully indemnify and save harmless the City from any liability, loss, cost, expense, or damage arising out of Contractor's performance of the Contract.

If the City gives Surety notice of Contractor's default, Surety shall, within 45 days, take one of the following actions:

1. Arrange for Contractor, with consent of the City, to perform and complete the Contract; or

2. Take over and assume completion of the Contract itself, through its agents or through independent contractors, and become entitled to the payment of the balance of the Contract Price.

If the Surety fails to take either of the actions set out above, it shall be deemed to have waived its right to perform and complete the Contract and receive payment of the balance of the Contract Price and the City shall be entitled to enforce any remedies available at law, including but not limited to completing the Contract itself and recovering any cost in excess of the Original Contract Price from the Surety.

This Bond and all obligations created hereunder shall be performable in Harris County, Texas. This Bond is given in compliance with the provisions of Chapter 2253, Texas Government Code, as amended, which is incorporated herein by this reference.

Notices required or permitted hereunder shall be in writing and shall be deemed delivered when actually received or, if earlier, on the third day following deposit in a United States Postal Service post office or receptacle, with proper postage affixed (certified mail, return receipt requested), addressed to the respective other Party at the address prescribed in the Contract documents, or at such other address as the receiving party may hereafter prescribe by written notice to the sending party.

**IN WITNESS THEREOF**, the said Contractor and Surety have signed and sealed this instrument on the respective dates written below their signatures and have attached current Power of Attorney.

ATTEST, SEAL: (if a corporation)
WITNESS: (if not a corporation)

_____
Name of Contractor

By: _____
Name:
Title:

By: _____
Name:
Title:
Date:

ATTEST/SURETY WITNESS:

(SEAL)

_____
Full Name of Surety

_____
Address of Surety for Notice

_____

_____
Telephone Number of Surety

By: _____
Name:
Title:
Date:

By: _____
Name:
Title: Attorney-in-Fact
Date:

This Ordinance or Contract has been reviewed as to form by the undersigned legal assistant and have been found to meet established Legal Department criteria. The Legal Department has not reviewed the content of these documents.

_____
Legal Assistant

_____
Date

END OF DOCUMENT

Document 00611

STATUTORY PAYMENT BOND

**THAT WE,** _____, as Principal, hereinafter called Contractor and the other subscriber hereto, _____, as Surety, do hereby acknowledge ourselves to be held and firmly bound unto the City of Houston, a municipal corporation, in the sum of $_____ for the payment of which sum, well and truly to be made to the City of Houston, and its successors, the said Contractor and Surety do bind themselves, their heirs, executors, administrators, successors, jointly and severally.

**THE CONDITIONS OF THIS OBLIGATION ARE SUCH THAT**:

**WHEREAS,** the Contractor has on or about this day executed a contract in writing with the City of Houston for _____
_____,
all of such work to be done as set out in full in said Contract documents therein referred to and adopted by the City Council, all of which are made a part of this instrument as fully and completely as if set out in full herein;

**NOW, THEREFORE**, if the said Contractor shall pay all claimants supplying labor and materials to him or a Subcontractor in the prosecution of the Work provided for in the Contract, then, this obligation shall be void; otherwise the same is to remain in full force and effect;

**PROVIDED HOWEVER**, that this Bond is executed pursuant to the provisions of Chapter 2253, Texas Government Code, as amended, and all liabilities on this Bond shall be determined in accordance with the provisions of said Article to the same extent as if it were copied at length herein.

**IN WITNESS THEREOF**, the said Contractor and Surety have signed and sealed this instrument on the respective dates written below their signatures and have attached current Power of Attorney.

ATTEST, SEAL: (if a corporation)
WITNESS: (if not a corporation)

_____
Name of Contractor

By: _____
Name:
Title:

By: _____
Name:
Title:
Date:

ATTEST/SURETY WITNESS:

(SEAL)

_____
Full Name of Surety

_____
Address of Surety for Notice

_____

_____
Telephone Number of Surety

By: _____
Name:
Title:
Date:

By: _____
Name:
Title: Attorney-in-Fact
Date:

This Ordinance or Contract has been reviewed as to form by the undersigned legal assistant and have been found to meet established Legal Department criteria. The Legal Department has not reviewed the content of these documents.

_____
Legal Assistant

_____
Date

END OF DOCUMENT

Document 00612

ONE-YEAR MAINTENANCE BOND

**THAT WE**, _____, as Principal, hereinafter called Contractor, and the other subscriber hereto, _____, as Surety, do hereby acknowledge ourselves to be held and firmly bound to the City of Houston, a municipal corporation, in the sum of $_____, for the payment of which sum well and truly to be made to the City of Houston and its successors, the said Contractor and Surety do bind themselves, their heirs, executors, administrators, successors, jointly and severally.

**THE CONDITIONS OF THIS OBLIGATION ARE SUCH THAT:**

**WHEREAS**, the Contractor has on or about this day executed a Contract in writing with the City of Houston for _____
_____,
all of such work to be done as set out in full in said Contract documents therein referred to and adopted by the City Council, all of which are made a part of this instrument as fully and completely as if set out in full herein.

**NOW THEREFORE**, if the said Contractor shall comply with the provisions of Paragraph 11.5.1 of the General Conditions, and correct work not in accordance with the Contract documents discovered within the established one-year period, then this obligation shall become null and void, and shall be of no further force and effect; otherwise, the same is to remain in full force and effect.

Notices required or permitted hereunder shall be in writing and shall be deemed delivered when actually received or, if earlier, on the third day following deposit in a United States Postal Service post office or receptacle, with proper postage affixed (certified mail, return receipt requested), addressed to the respective other party at the address prescribed in the Contract documents, or at such other address as the receiving party may hereafter prescribe by written notice to the sending party.

**IN WITNESS THEREOF**, the said Contractor and Surety have signed and sealed this instrument on the respective dates written below their signatures and have attached current Power of Attorney.

ATTEST, SEAL: (if a corporation)
WITNESS: (if not a corporation)

_____
Name of Contractor

By: _____
Name:
Title:

By: _____
Name:
Title:
Date:

ATTEST/SURETY WITNESS:

(SEAL)

_____
Full Name of Surety

_____
Address of Surety for Notice

_____

_____
Telephone Number of Surety

By: _____
Name:
Title:
Date:

By: _____
Name:
Title: Attorney-in-Fact
Date:

This Ordinance or Contract has been reviewed as to form by the undersigned legal assistant and have been found to meet established Legal Department criteria. The Legal Department has not reviewed the content of these documents.

_____ _____
Legal Assistant Date

END OF DOCUMENT

Document 00613

ONE-YEAR SURFACE CORRECTION BOND

**THAT WE**, _____, as Principal, hereinafter called Contractor, and the other subscriber hereto, _____, as Surety, do hereby acknowledge ourselves to be held and firmly bound to the City of Houston, a municipal corporation, in the sum of $_____ such sum being equal to four percent of the Original Contract Price, for the payment of which sum to be made to the City of Houston and its successors, Contractor and Surety do bind themselves, their successors, jointly and severally.

**THE CONDITIONS OF THIS OBLIGATION ARE SUCH THAT:**

**WHEREAS**, the Contractor has entered into a Contract in writing with the City of Houston, Texas, dated of even date herewith, for _____
_____,
all of such work to be done in accordance with the Contract documents therein referred to, and adopted by the City Council of the City of Houston.

**NOW THEREFORE**, if the Contractor shall comply with the provisions of Paragraph 11.5.1 of the General Conditions, and repair, replace, restore, and correct surface work associated with backfill operations of subsurface work not in accordance with the Contract documents discovered within one year from the date that the One-year Maintenance Bond has expired, then this obligation shall become null and void, and shall be of no further force and effect; otherwise, the same is to remain in full force and effect.

Notices required or permitted hereunder shall be in writing and shall be deemed delivered when actually received or, if earlier, on the third day following deposit in a United States Postal Service post office or receptacle, with proper postage affixed (certified mail, return receipt requested), addressed to the respective other party at the address prescribed in the Contract documents, or at such other address as the receiving party may hereafter prescribe by written notice to the sending party.

**IN WITNESS THEREOF**, the said Principal and Surety have signed and sealed this instrument on the respective dates written below their signatures.

ATTEST, SEAL: (if a corporation)
WITNESS: (if not a corporation)

By: _____
Name:
Title:

_____
Name of Contractor

By: _____
Name:
Title:
Date:

ATTEST/SURETY WITNESS:

(SEAL)

_____
Full Name of Surety

_____
Address of Surety for Notice

_____

_____
Telephone Number of Surety

By: _____
Name:
Title:
Date:

By: _____
Name:
Title: Attorney-in-Fact
Date:

This Ordinance or Contract has been reviewed as to form by the undersigned legal assistant and have been found to meet established Legal Department criteria. The Legal Department has not reviewed the content of these documents.

_____
Legal Assistant

_____
Date

END OF DOCUMENT

Document 00620

AFFIDAVIT OF INSURANCE

**BEFORE ME**, the undersigned authority, on this day personally appeared

_____, who
Affiant

being by me duly sworn on his oath stated that he is _____, of
Title

_____,
Contractor's Company Name

the Contractor named and referred to within the Contract documents; that he is fully competent and authorized to give this affidavit and that the attached original insurance certificate truly and accurately reflects the insurance coverage that is now available and will be available during the term of the Contract.

_____
Affiant's Signature

SWORN AND SUBSCRIBED before me on _____.
Date

_____
Notary Public in and for the State of TEXAS

_____
Print or type Notary Public name

My Commission Expires: _____
Expiration Date

END OF DOCUMENT

Document 00624

AFFIDAVIT OF COMPLIANCE WITH
AFFIRMATIVE ACTION PROGRAM

**BEFORE ME**, the undersigned authority, on this day personally appeared

_____, who
Affiant

being by me duly sworn on his oath stated that he is _____,
Title

of _____,
Contractor

the Contractor named and referred to within the Contract documents; that he is fully competent and authorized to give this affidavit and that the Contract is in compliance with the Affirmative Action Program of the City and has done all that is required by the Contract documents, the Affirmative Action Program, and pursuant to Chapter 15, Code of Ordinances, City of Houston, §15.16 et seq.

_____
Affiant's Signature

SWORN AND SUBSCRIBED before me on this day of _____, 20___.

_____
Notary Public in and for the State of TEXAS

_____
Print or Type Notary Public Name

My Commission Expires: _____
Expiratio

END OF DOCUMENT

**Document 00630**
**(POP-2)**
**City of Houston**
**Certification of Compliance with**
**Pay or Play Program**

Contractor Name: _____ $ _____
*(Contractor/Subcontractor)* *(Amount of Contract)*

Contractor Address: _____

Project No.: «WBSNo» _____

Project Name: «LegalPrjName» _____

POP Liaison Name: _____

In accordance with the City of Houston Pay or Play Program authorized by Ordinance 2007-534 and Executive Order 1-7, Contractor/Subcontractor agrees to abide by the terms of this Program. This certification is required of all contractors for contracts subject to the program. You must agree EITHER to PAY or to PLAY for all covered employees. The Contractor/Subcontractor may also Pay on behalf of some covered employees and Play on behalf of other covered employees.

The Contractor/Subcontractor will comply with all provisions of the Pay or Play Program and will furnish all information and reports requested to determine compliance with program requirements of the Pay or Play Program (See Executive Order 1-7 for the terms of the Pay or Play program) The criteria of the program is as follows:

The Contractor/Subcontractor agrees to **"Pay"** $1.00 per hour for work performed by covered employees under the contract with the City. If independent contract labor is utilized the Contractor/Subcontractor agrees to report hours worked by the independent contract laborer and pay $1.00 per hour for work performed.

Otherwise the Contractor/Subcontractor agrees to **"Play"** by providing health benefits to each covered employee. The health benefits must meet the following criteria:

1. The employer will contribute no less than $150 per employee per month toward the total premium cost for single coverage only; and
2. The employee contribution, if any amount, will be no greater than 50% of the total premium cost and no more than $150 per month.
3. Pursuant to E.O. 1-7 section 4.04 a contractor is deemed to have complied with respect to a covered employee who is not provided health benefits if the employee refuses the benefits and the employee's contribution to the premium is no more than $40 per month.

| Please select whether you choose to: | Pay | Play | Both |
|---|---|---|---|
| | | | |

The Contractor/Subcontractor will file compliance reports with the City, which will include activity for covered employees subject to the program, in the form and to the extent requested by the administering department. Compliance reports shall contain information including, but not limited to, documentation showing employee health coverage and employee work records.
**Note: The Contractor is responsible to the City for the compliance of covered employees of covered subcontractors and only forms that are accurate and complete will be accepted.**

| *Estimated Number of: | Prime Contractor | Sub-Contractor |
|---|---|---|
| Total Employees on City Job | | |
| Covered Employees | | |
| Non-Covered Employees | | |
| Exempt Employees | | |

***Required**

I hereby certify that the above information is true and correct.

_____ _____
Contractor *(Signature)* Date

_____
Name and Title *(Print or type)*

# Document 00631
## (POP-3)
## City of Houston
## Pay or Play Program
## List of Subcontractors

**Prime Contractor:** _____ **POP Contact Person:** _____
**Project Number/Description:** _____ **Address:** _____
_____ _____
**Email:** _____
**Phone:** _____

**Note: Include ALL subcontractors (use additional form if necessary)**

| Subcontractor Name | Supplier Y/N? | Amount of Subcontract | Check One: Pay | Check One: Play | Check One: Both (Pay and Play) | Check One: N/A | Contact Person | Phone | Email Address | Mailing Address |
|---|---|---|---|---|---|---|---|---|---|---|
| | | | | | | | | | | |
| | | | | | | | | | | |
| | | | | | | | | | | |
| | | | | | | | | | | |
| | | | | | | | | | | |
| | | | | | | | | | | |
| | | | | | | | | | | |
| | | | | | | | | | | |
| | | | | | | | | | | |
| | | | | | | | | | | |

*If the above information is found to be submitted fraudulently with the intent to bypass or deceive the purpose of the Pay or Play Program the contractor will be held liable for all compliance requirements from the inception of the contract. All subcontracts that surpass the $200,000.00 threshold will be responsible for Pay or Play compliance from the inception of the contract.

**Affidavit**

I hereby solemnly affirm, certify and confirm that the total sub-contract value stated above is the final value of the contract (*) including all material costs, fuel, payroll, taxes, fees, profit sharing, labor or any payments in relation to the contracted work and no separate payment or contract has been made for the sub-contract under contract no._____ . The above sub-contract value includes all the costs related to work under the contract. The contractor and sub-contractor(s) agree to inform The Mayor's Office of Business Opportunity of any related cost(s) added to the contracted work and re-submit POP-3 with the current value of the sub-contract. I understand that compliance with "Pay or Play" program is mandatory and nothing has been hidden to circumvent the program requirements.

_____
Contractor Authorized Representative & Title Date
Name & Signature

Document 00633

CERTIFICATION BY PROPOSED MATERIAL SUPPLIERS,
LESSORS, AND PROFESSIONAL SERVICE PROVIDERS
REGARDING EQUAL EMPLOYMENT OPPORTUNITY

Company Name: _____ $_____
(Supplier, Lessor, Professional Service Provider) (Amount of Contract)

Company Address: _____

Company Telephone Number:_____ Fax:_____

E-mail Address: _____

Web Page/URL Address:_____

Company Tax Identification Number: _____

Project No.: [*WBS/CIP/AIP/File No.*]_____

Project Name: [*Legal Project Name*]_____

In accordance with the City of Houston Ordinance 78-1538, Supplier/Lessor/Professional Service Provider represents to be an equal opportunity employer and agrees to abide by the terms of the Ordinance. This certification is required of all Suppliers/Lessors/Professional Service Providers (herein Supplier) with contracts in the amount of $10,000.00 or more.

[ ] Yes [ ] No Supplier agrees not to discriminate against any employee or applicant for employment because of race, religion, color, sex, national origin, or age.

[ ] Yes [ ] No Supplier agrees that all qualified applicants will receive consideration for employment without regard to race, religion, color, sex, national origin, or age.

[ ] Yes [ ] No Supplier will comply with all provisions of Executive Order No. 11246 and rules, regulations and applicable orders of the Department of Labor or other Federal Agency responsible for enforcement of applicable equal opportunity and affirmative action provisions and will likewise furnish all information and reports required by the Mayor or Contract Compliance Officers for the purpose of investigation to ascertain and effect compliance with the City of Houston's Office of Affirmative Action and Contract Compliance.

[ ] Yes [ ] No The Supplier shall file and cause their sub-tier contractors to file compliance reports with the City in the form and to the extent as may be prescribed by the Mayor or Contract Compliance Officers. Compliance reports filed at such times as directed shall contain information including, but not limited to, the practices, policies, programs, and employment policies.

I hereby certify that the above information is true and correct.

_____ _____
COMPANY OFFICER (Signature) DATE

_____
NAME AND TITLE (Print or type)

END OF DOCUMENT

**********

*Instructions:*

*Before submitting this document, Contractor shall provide*

1. *Payment Notifications (00646) to each subcontractor on each contract;*
2. *A copy to the City Monitoring Authority of all applicable Payment Notifications;*
3. *A list to the City Monitoring Authority containing the information requested in this document for each subcontractor from which Contractor has withheld payment; and*
4. *The notarized signature of Contractor's Representative.*

**********

Document 00642

# MONTHLY SUBCONTRACTOR PAYMENT REPORTING FORM

Legal Project Name:_____

Outline Agreement No.:_____ WBS No.:_____

Contractor's Company Name: _____

Address: _____

## CERTIFICATION

_____, Contractor's Representative for the above referenced Contract, hereby certifies that (1) Contractor has paid all subcontractors, except those noted below, (2) Contractor made such payments (a) in proportion to the amount City paid Contractor and (b) in accordance and compliance with all applicable Contract Documents and laws; and (3) Contractor withheld no sums from any subcontractor for allegations of deficiency in Work. The term "subcontractor", as used herein, includes all persons or firms furnishing work, materials, services or equipment Contractor ordered incorporated into Work or placed near the Project for which the City made partial payment.

EXCEPTION: Contractor sent Payment Notifications to the following subcontractors explaining why Contractor withheld payment. Copies are attached.

| | |
|---|---|
| Subcontractor Name:_____ | Subcontractor Name: _____ |
| Street Address: _____ | Street Address: _____ |
| City, State, and Zip Code: _____ | City, State, and Zip Code: _____ |
| Amount of Payment Withheld:_____ | Amount of Payment Withheld: _____ |
| Date Payment First Withheld: _____ | Date Payment First Withheld: _____ |
| Description of Good Faith Reason:_____ | Description of Good Faith Reason:_____ |
| _____ | _____ |

_____
(Signature of Contractor's Representative)

_____
(Print or Type Name of Contractor's Representative)

**SWORN TO AND SUBSCRIBED** before me on:

_____
Date

_____
Notary Public in and for the State of Texas

My Commission Expires: _____
Expiration Date

_____
Print or Type Name of Notary Public

**********

*Instructions:*

*If Contractor withholds any amount of a payment to a Subcontractor for any reason, the Contractor shall send Payment Notifications to the Subcontractor explaining why the payment was withheld.*

*Contractor shall provide the City Monitoring Authority with Payment Notifications for each subcontractor from which Contractor has withheld payment. Contractor shall submit all necessary Payment Notifications (Document 00646), Payment Reporting Forms (Document 00642), and other documentation at the same time Contractor submits the Application and Certification for Payment or the Estimate for Payment.*

**********

Document 00646

## PAYMENT NOTIFICATION – EXPLANATION OF WITHHOLDING

Legal Project Name:_____

Outline Agreement No.:_____ WBS No.:_____

Contractor's Company Name: _____

Address: _____

Date: _____

## SUBCONTRACTOR PAYMENT INFORMATION:

Subcontractor Name:_____

Street Address: _____

City, State, and Zip Code: _____

Business Phone Number: _____

Amount of Subcontractor Invoice: _____

Amount of Payment Made: _____

Amount of Payment Withheld:_____

Date Payment First Withheld: _____

DETAILED EXPLANATION OF WITHHOLDING: _____

_____

_____

_____

_____

_____ _____

(Signature of Contractor's Representative) (Print or Type Name of Contractor's Representative)

Document 00700

# GENERAL CONDITIONS

November 1, 2014 EDITION

TABLE OF ARTICLES

1. GENERAL PROVISIONS
2. THE CITY
3. CONTRACTOR
4. ADMINISTRATION OF THE CONTRACT
5. SUBCONTRACTORS AND SUPPLIERS
6. CONSTRUCTION BY THE CITY OR BY SEPARATE CONTRACTORS
7. CHANGES IN THE WORK
8. TIME
9. PAYMENTS AND COMPLETION
10. SAFETY PRECAUTIONS
11. INSURANCE AND BONDS
12. UNCOVERING AND CORRECTION OF THE WORK
13. MISCELLANEOUS PROVISIONS
14. TERMINATION OR SUSPENSION OF THE CONTRACT

*ARTICLE 1 - GENERAL PROVISIONS ..... 3*

*1.1 DEFINITIONS ..... 3*
*1.2 EXECUTION, CORRELATION, AND INTENT ..... 5*
*1.3 OWNERSHIP AND USE OF DOCUMENTS ..... 6*
*1.4 INTERPRETATION ..... 6*

*ARTICLE 2 - THE CITY ..... 6*

*2.1 LIMITATIONS OF THE CITY'S OFFICERS AND EMPLOYEES ..... 6*
*2.2 DUTIES OF THE CITY ..... 6*
*2.3 AVAILABILITY OF LAND AND USE OF SITE ..... 6*
*2.4 THE CITY'S RIGHT TO STOP THE WORK ..... 7*
*2.5 THE CITY'S RIGHT TO CARRY OUT WORK ..... 7*

*ARTICLE 3 - CONTRACTOR ..... 7*

*3.1 RESPONSIBILITIES ..... 7*
*3.2 REVIEW OF CONTRACT AND FIELD CONDITIONS BY CONTRACTOR ..... 7*
*3.3 SUPERVISION AND CONSTRUCTION PROCEDURES ..... 7*
*3.4 SUPERINTENDENT ..... 8*
*3.5 LABOR ..... 8*
*3.6 PREVAILING WAGE RATES ..... 9*
*3.7 LABOR CONDITIONS ..... 9*
*3.8 DRUG DETECTION AND DETERRENCE ..... 9*
*3.9 MATERIALS & EQUIPMENT ..... 10*
*3.10 PRODUCT OPTIONS AND SUBSTITUTIONS ..... 10*
*3.11 CASH ALLOWANCES ..... 11*
*3.12 WARRANTY ..... 11*
*3.13 TAXES ..... 12*
*3.14 PERMITS, FEES, AND NOTICES ..... 12*
*3.15 CONSTRUCTION SCHEDULES ..... 12*
*3.16 DOCUMENTS AND SAMPLES AT THE SITE ..... 12*
*3.17 MANUFACTURER'S SPECIFICATIONS ..... 12*
*3.18 SHOP DRAWINGS, PRODUCT DATA, AND SAMPLES ..... 13*
*3.19 CULTURAL RESOURCES AND ENDANGERED SPECIES ..... 13*
*3.20 CUTTING AND PATCHING ..... 14*
*3.21 CLEANING ..... 14*
*3.22 SANITATION ..... 14*
*3.23 ACCESS TO WORK AND TO INFORMATION ..... 14*
*3.24 TRADE SECRETS ..... 14*
*3.25 INDEMNIFICATION ..... 14*
*3.26 RELEASE AND INDEMNIFICATION – PATENT, COPYRIGHT, TRADEMARK, AND TRADE SECRET INFRINGEMENT ..... 15*
*3.27 INDEMNIFICATION PROCEDURES ..... 15*
*3.28 CONTRACTOR DEBT ..... 15*

*ARTICLE 4 - ADMINISTRATION OF THE CONTRACT ..... 16*

*4.1 CONTRACT ADMINISTRATION ..... 16*
*4.2 COMMUNICATIONS IN ADMINISTRATION OF THE CONTRACT ..... 17*
*4.3 CLAIMS AND DISPUTES ..... 17*
*4.4 RESOLUTION OF CLAIMS AND DISPUTES ..... 18*
*4.5 CONDITION PRECEDENT TO SUIT; WAIVER OF ATTORNEYFEES AND INTEREST .....*
*4.6 INTERIM PAYMENT WAIVER & RELEASE ..... 18*

*ARTICLE 5 - SUBCONTRACTORS AND SUPPLIERS ..... 19*

*5.1 AWARD OF SUBCONTRACTS OTHER CONTRACTS FOR PORTIONS OF THE WORK ..... 19*
*5.2 CONTRACTOR RESPONSIBILITY FOR SUBCONTRACTORS ..... 19*

*ARTICLE 6 - CONSTRUCTION BY THE CITY OR BY SEPARATE CONTRACTORS ..... 19*

*6.1 THE CITY'S RIGHT TO PERFORM CONSTRUCTION AND TO AWARD SEPARATE CONTRACTS ..... 19*
*6.2 COORDINATION ..... 19*
*6.3 MUTUAL RESPONSIBILITY ..... 20*
*6.4 THE CITY'S RIGHT TO CLEAN UP ..... 20*

*ARTICLE 7 - CHANGES IN THE WORK ..... 20*

*7.1 CHANGES ..... 20*
*7.2 WORK CHANGE DIRECTIVES ..... 20*
*7.3 ADJUSTMENTS IN CONTRACT PRICE ..... 21*
*7.4 MINOR CHANGES IN THE WORK ..... 22*

*ARTICLE 8 - TIME ..... 22*

*8.1 PROGRESS AND COMPLETION ..... 22*
*8.2 DELAYS AND EXTENSIONS OF TIME ..... 22*

*ARTICLE 9 - PAYMENTS AND COMPLETION ..... 23*

*9.1 UNIT PRICE WORK ..... 23*
*9.2 ESTIMATES FOR PAYMENT, UNIT PRICE WORK ..... 23*
*9.3 STIPULATED PRICE WORK ..... 24*
*9.4 APPLICATIONS FOR PAYMENT, STIPULATED PRICE WORK ..... 24*
*9.5 CERTIFICATES FOR PAYMENT ..... 24*
*9.6 COMPUTATIONS OF CERTIFICATES FOR PAYMENT ..... 24*
*9.7 DECISIONS TO WITHHOLD CERTIFICATION ..... 24*
*9.8 PROGRESS PAYMENTS ..... 25*
*9.9 DATE OF SUBSTANTIAL COMPLETION ..... 25*
*9.10 PARTIAL OCCUPANCY OR USE ..... 26*
*9.11 FINAL COMPLETION AND FINAL PAYMENT ..... 26*

*9.12 LIQUIDATED DAMAGES ..... 27*

*ARTICLE 10 - SAFETY PRECAUTIONS ..... 27*

*10.1 SAFETY PROGRAMS ..... 27*
*10.2 POLLUTANTS AND POLLUTANT FACILITIES ..... 27*
*10.3 SAFETY OF THE ENVIRONMENT, PERSONS, AND PROPERTY ..... 28*
*10.4 EMERGENCIES ..... 28*

*ARTICLE 11 - INSURANCE AND BONDS ..... 28*

*11.1 GENERAL INSURANCE REQUIREMENTS ..... 28*
*11.2 INSURANCE TO BE PROVIDED BY CONTRACTOR ..... 29*
*11.3 PROOF OF INSURANCE ..... 32*
*11.4 PERFORMANCE AND PAYMENT BONDS ..... 33*
*11.5 MAINTENANCE BONDS ..... 33*
*11.6 SURETY ..... 33*
*11.7 DELIVERY OF BONDS ..... 34*

*ARTICLE 12 - UNCOVERING AND CORRECTION OF THE WORK ..... 34*

*12.1 UNCOVERING OF THE WORK ..... 34*
*12.2 CORRECTION OF THE WORK ..... 34*
*12.3 ACCEPTANCE OF NONCONFORMING WORK ..... 34*

*ARTICLE 13 - MISCELLANEOUS PROVISIONS ..... 34*

*13.1 GOVERNING LAWS ..... 34*
*13.2 SUCCESSORS ..... 35*
*13.3 BUSINESS STRUCTURE AND ASSIGNMENTS ..... 35*
*13.4 WRITTEN NOTICE ..... 35*
*13.5 RIGHTS AND REMEDIES ..... 35*
*13.6 TESTS AND INSPECTIONS ..... 35*
*13.7 INTEREST ..... 35*
*13.8 PARTIES IN INTEREST ..... 36*
*13.9 ENTIRE CONTRACT ..... 36*
*13.10 WRITTEN AMENDMENT ..... 36*
*13.11 COMPLIANCE WITH LAWS ..... 36*
*13.12 SEVERABILITY ..... 35*

*ARTICLE 14 - TERMINATION OR SUSPENSION OF THE CONTRACT ..... 36*

*14.1 TERMINATION BY THE CITY FOR CAUSE ..... 36*
*14.2 TERMINATION BY THE CITY FOR CONVENIENCE ..... 37*
*14.3 SUSPENSION BY THE CITY FOR CONVENIENCE ..... 37*
*14.4 TERMINATION BY CONTRACTOR ..... 38*

## ARTICLE 1 - GENERAL PROVISIONS

### *1.1 DEFINITIONS*

*1.1.1 Agreement:* Document signed by the Parties and binding the Parties, containing the name of Contractor, title and location of the Project, Original Contract Time, Original Contract Price, enumeration of documents included in the Contract, and other provisions.

*1.1.2 Bonds:* Performance Bond, Payment Bond, Maintenance Bond, and other Surety instruments executed by Surety. When in singular form, refers to individual instrument.

*1.1.3 Business Enterprise*: Any business entity registered in a program authorized by 49 C.F.R. § 26 (where applicable) or City Code of Ordinances, Chapter 15, Article II, relating to Equal Opportunity Employment and taking affirmative action to ensure that applicants are employed and employees are treated without regard to race, religion, color, sex, national origin, or age. The term "Business Enterprise" may include any Disadvantaged Business Enterprise ("DBE"), Minority Business Enterprise ("MBE"), Woman Business Enterprise ("WBE"), Small Business Enterprise ("SBE"), Person with Disability Enterprise ("PDBE"), and any Historically Underutilized Business ("HUB").

*1.1.4 Business Enterprise Policy:* Contract documents and applicable policies relating to Business Enterprises and authorized under 49 C.F.R. § 26 or City Code of Ordinances, Chapter 15, Article II.

*1.1.5 Cash Allowance*: An estimated sum of money to be used only for a limited class of expenditures such as utility relocation costs, fees for special licenses or permits, or other "pass-through" costs that would be the same for any contractor. Cash Allowances may not be used to purchase goods or services that are not specified in the Contract. The unspecified items must be purchased according to the terms of Article 7.

*1.1.6 Change Order:* Written instrument prepared by the City and signed by City Engineer and Contractor, specifying the following:

.1 a change in the Work;
.2 a change in Contract Price, if any; and
.3 a change in Contract Time, if any.

The value of a Change Order is the net amount after offsetting all deductions against all additions effected by the Change Order.

*1.1.7 City:* The City of Houston, a home rule municipality located principally within Harris County, Texas, including its successors and its authorized representatives.

*1.1.8 City Engineer:* The City Engineer, or the City employee representing the City Engineer, designated in the Agreement and authorized to represent the City, or successors.

*1.1.9 Claim:* Written demand or written assertion by one Party seeking adjustment of the Contract, payment of money, extension of time, or other relief under the Contract and includes, but is not limited to, claims for materials, labor, equipment, delay, changes, adjustments, substitutions, fees and third party claims. The Party making the Claim has the responsibility to substantiate the Claim.

*1.1.10 Conditions of the Contract:* General Conditions and Supplementary Conditions.

*1.1.11 Construction Manager:* Person or firm under contract with the City as its authorized representative to oversee and administer construction of the Work, and who may perform the role of Project Manager and Inspector, as designated by City Engineer in writing.

*1.1.12 Contract:* The Agreement; documents enumerated in and incorporated into the Agreement, Modifications, and amendments.

*1.1.13 Contract Price:* The monetary amount stated in the Agreement adjusted by Change Order, and increases or decreases in Unit Price Quantities, if any.

*1.1.14 Contract Time:* The number of days stated in the Agreement to substantially complete the Work, plus days authorized by Change Order.

*1.1.15 Contractor:* Person or firm identified as such in the Agreement including its successors and its authorized representatives.

*1.1.16 Date of Commencement of the Work:* Date established in Notice to Proceed on which Contract Time will commence. This date will not be changed by failure of Contractor, or persons or entities for whom Contractor is responsible, to act.

*1.1.17 Date of Substantial Completion:* Date that construction, or portion thereof designated by City Engineer, is certified by City Engineer to be substantially complete.

*1.1.18 Design Consultant:* Person or firm, under contract with the City, to provide professional services during construction and its authorized representatives. If a Design Consultant is not employed for services during construction, Project Manager will perform duties of Design Consultant designated in the Contract in addition to usual duties of Project Manager.

*1.1.19 Drawings:* Graphic and pictorial portions of the Contract that define the character and scope of the Work.

*1.1.20 Extra Unit Price:* Unit Prices, which may be required for completion of the Work. These Unit Prices and Unit Price Quantities are in the Contract and are included in Original Contract Price.

*1.1.21 Furnish:* To supply, pay for, deliver to the site, and unload.

*1.1.22 General Requirements:* The sections of Division 01 Specifications that specify administrative and procedural requirements and temporary facilities required for the Work.

*1.1.23 Inspector:* City's employee or agent authorized to assist with inspection of the Work.

*1.1.24 Install:* Unpack, assemble, erect, place, anchor, apply, work to dimension, finish, cure, clean, protect, and similar operations.

*1.1.25 Legal Holiday:* Day established by the City Council as a holiday.

*1.1.26 Major Unit Price Work:* An individual Unit Price item,

.1 whose value is greater than five percent of Original Contract Price,

.2 whose value becomes greater than five percent of Original Contract Price as the result of an increase in quantity, or

.3 whose value is $100,000, whichever is least.

*1.1.27 Mayor's Office of Business Opportunity:* any reference to, or use of, the "Office of Affirmative Action" shall mean the Mayor's Office of Business Opportunity, or any such future name to which it is changed.

*1.1.28 Minor Change in the Work*: A written change in the Work, ordered by City Engineer, that does not change Contract Price or Contract Time, and that is consistent with the general scope of the Contract.

*1.1.29 Modification:* Change Order, Work Change Directive, or Minor Change in the Work.

*1.1.30 Notice of Noncompliance:* A written notice by City Engineer to Contractor regarding defective or nonconforming work that does not meet the Contract requirements, and that establishes a time by which Contractor shall correct the defective or nonconforming work.

*1.1.31 Notice to Proceed:* A written notice by City Engineer to Contractor establishing Date of Commencement of the Work.

*1.1.32 Original Contract Price:* The monetary amount originally stated in the Agreement.

*1.1.33 Parties:* Contractor and the City. When in singular form, refers to Contractor or the City.

*1.1.34 Pollutant:* Any materials subject to the Texas Solid Waste Disposal Act.

*1.1.35 Pollutant Facility:* Any facility regulated by the State of Texas to protect the health and environment from contamination by Pollutants, including without limitation, landfills, oil and gas production and storage facilities, wastewater facilities, waste injection wells, and storage tanks (including drums).

*1.1.36 Product:* Materials, equipment, or systems incorporated into the Work or to be incorporated into the Work.

*1.1.37 Product Data:* Illustrations, standard schedules, performance charts, instructions, brochures, diagrams, and other information furnished by Contractor to illustrate a Product.

*1.1.38 Project:* Total construction, of which the Work performed under the Contract may be the whole or a part, and which may include construction by the City or by separate contractors.

*1.1.39 Project Manager:* City Engineer's authorized representative for administration of the Work. Titles used within the City's departments may be different than those used in this definition.

*1.1.40 Provide:* Furnish and Install, complete, ready for intended use.

*1.1.41 Samples:* Physical examples that illustrate Products, or workmanship, and establish standards by which the Work is judged.

*1.1.42 Shop Drawings:* Drawings, diagrams, schedules, and other data specially prepared for the Work by Contractor, Subcontractor or Supplier, to illustrate a portion of the Work.

*1.1.43 Specifications:* Divisions 01 through 16 of the documents that are incorporated into the Agreement, consisting of written General Requirements and requirements for Products, standards, and workmanship for the Work, and performance of related services.

*1.1.44 Stipulated Price:* Single lump sum amount stated in the Contract for completion of the Work, or for designated portion of the Work.

*1.1.45 Subcontractor:* Person or firm that has direct or indirect contract with Contractor or with another Subcontractor to perform a portion of the Work and its authorized representatives.

*1.1.46 Superintendent:* Employee of Contractor having authority and responsibility to act for and represent Contractor.

*1.1.47 Supplementary Conditions:* Part of Conditions of the Contract that amends or supplements General Conditions.

*1.1.48 Supplier:* Manufacturer, distributor, materialman, or vendor having a direct agreement with Contractor or Subcontractor for Products, or services and its authorized representatives.

*1.1.49 Surety:* Corporate entity that is bound by one or more Bonds, and is responsible for completion of the Work, including the correction period, and for payment of debts incurred in fulfilling the Contract. Surety shall include co-surety or reinsurer, as applicable.

*1.1.50 Underground Facilities:* Pipes, conduits, ducts, cables, wires, manholes, vaults, tanks, tunnels, or other such facilities or attachments and encasements containing such facilities that exist below ground level.

*1.1.51 Unit Price:* An amount stated in the Contract for an individual, measurable item of work, which, when multiplied by actual quantity incorporated into the Work, amounts to full compensation for completion of the item, including work incidental to it.

*1.1.52 Unit Price Quantities:* Quantities indicated in the Contract that are approximations made by the City for contracting purposes.

*1.1.53 Work:* Entire construction required by the Contract, including all labor, Products, and services provided by Contractor to fulfill Contractor's obligations. The Work may constitute the whole or a portion of the Project.

*1.1.54 Work Change Directive:* A written change in the Work, ordered by City Engineer, that is within the general scope of the Contract and consisting of additions, deletions, or other revisions. A Work Change Directive will state proposed basis for adjustment, if any, in Contract Price or Contract Time, or both.

*1.2 EXECUTION, CORRELATION, AND INTENT*

1.2.1 Execution of the Contract by Contractor is conclusive that Contractor has visited the Work site, become familiar with local conditions under which the Work will be performed, and fully informed itself as to conditions and matters which can affect the Work or costs. Contractor further agrees that it has carefully correlated personal observations with requirements of the Contract.

1.2.2 The Contract and Modifications have been read and carefully considered by Contractor, who understands and agrees to their sufficiency for the Work. The Contract may not be more strongly construed against the City than against Contractor and Surety.

1.2.3 Contractor shall include all items necessary for proper execution and completion of the Work.

1.2.4 Reference to standard specifications, manuals, or codes of a technical society, organization, or association, or to laws or regulations of a governmental authority, whether specific or implied, mean the latest edition in effect as of date of receipt of bids, except as may be otherwise specifically stated in the Contract.

1.2.5 No provision of any referenced standard, specification, or manual changes the duties and responsibilities of the City, City Engineer, Contractor, or Design Consultant from those set forth in the Contract. Nor do these provisions assign to Design Consultant any duty or authority to supervise or direct performance of the Work or any duty or

authority to undertake any actions contrary to provisions of the Contract.

1.2.6 Organization of Specifications into divisions, sections, and articles and arrangement of Drawings does not control Contractor in dividing the Work among Subcontractors or in establishing the extent of work to be performed by any trade.

1.2.7 Unless otherwise defined in the Contract, words which have well-known construction industry technical meanings are used in the Contract in accordance with these recognized meanings.

*1.3 OWNERSHIP AND USE OF DOCUMENTS*

1.3.1 Drawings, Specifications, and other documents prepared by the City or by Design Consultant are instruments of service through which the Work to be executed by Contractor is described. Contractor may retain one Contract record set.

1.3.2 Neither Contractor, Subcontractor, nor Supplier will own or claim a copyright to documents contained in the Contract or any part of the Contract.

1.3.3 Documents contained in the Contract, prepared by the City or by Design Consultant, and copies furnished to Contractor, are for use solely with respect to the Work. They may not be used by Contractor, Subcontractor or Supplier on other projects or for additions to the Work, outside the scope of the Work, without the specific written consent of City Engineer, and Design Consultant, when applicable.

1.3.4 Contractor, Subcontractors, and Suppliers are granted a limited license to use and reproduce applicable portions of the Contract appropriate to and for use in execution of their work under the Contract.

1.4 *INTERPRETATION*

1.4.1 Specifications are written in an imperative streamlined form and are directed to Contractor, unless noted otherwise. When written in this form, words "shall be" are included by inference where a colon (:) is used within sentences or phrases.

1.4.2 In the interest of brevity, the Contract frequently omits modifying words such as "all" and "any" and articles such as "the" and "an", but an absent modifier or article is not intended to affect interpretation of a statement.

## ARTICLE 2 - THE CITY

2.1 *LIMITATIONS OF THE CITY'S OFFICERS AND EMPLOYEES*

2.1.1 No officer or employee of the City may authorize Contractor to perform an act or work contrary to the Contract, except as otherwise provided in the Contract.

2.2 *DUTIES OF THE CITY*

2.2.1 If a building permit is required, the City will process an application for, and Contractor shall purchase the building permit before Date of Commencement of the Work.

2.2.2 The City will make available to Contractor a reproducible set of Drawings. Additional copies will be furnished, on Contractor's request, at the cost of reproduction.

2.2.3 When necessary for performance of the Work, the City will provide surveys describing physical characteristics, legal limitations, legal description of site, and horizontal and vertical control adequate to lay out the Work.

2.2.4 Information or services that the City is required to provide under the Contract will be provided by the City with reasonable promptness to avoid delay in orderly progress of the Work.

2.2.5 The Contract imposes no implied duty on the City. The City does not warrant any plans or specifications associated with the Contract.

2.2.6 Except as expressly stated in this Article, the City owes no duty to the Contractor or any subcontractor.

2.3 *AVAILABILITY OF LAND AND USE OF SITE*

2.3.1 The City will furnish, as indicated in the Contract, rights-of-way, land on which the Work is to be performed, and other land designated in the Contract for use by Contractor unless otherwise provided in the Contract.

2.3.2 Contractor shall confine operations at site to those areas permitted by law, ordinances, permits, and the Contract, and may not unreasonably encumber site with materials or equipment.

2.3.3 In addition to land provided by the City under Section 2.3, Contractor shall provide all land and access to land that may be required for use by Contractor for temporary construction facilities or for storage of materials and equipment, and shall indemnify the City during its use of the land as stated in Section 3.25.

2.4 *THE CITY'S RIGHT TO STOP THE WORK*

2.4.1 If Contractor fails to carry out the Work in accordance with the Contract, or fails to correct work which is not in accordance with requirements of the Contract as required in Sections 12.1 and 12.2, the City may, by Notice of Noncompliance, order Contractor to stop the Work or any portion of the Work until the cause for the order has been eliminated. However, the right of the City to stop the Work will not give rise to a Claim for delay or to a duty on the part of the City to exercise this right for the benefit of Contractor or any other person or entity, except to the extent required by Section 6.2. If Contractor corrects the defective or nonconforming work within the time established in Notice of Noncompliance, City Engineer will give written notice to Contractor to resume performance of the Work.

2.5 *THE CITY'S RIGHT TO CARRY OUT WORK*

2.5.1 If Contractor fails to carry out work in accordance with the Contract, and fails within the period established in a Notice of Noncompliance to correct the nonconforming work, the City may, after expiration of the required period, correct the deficiencies without prejudice to other remedies the City may have, including rights of the City under Section 14.1.

2.5.1.1 When the City corrects deficiencies, City Engineer will issue an appropriate Change Order and deduct from payments then or thereafter due Contractor the cost of correcting the deficiencies, including compensation for Design Consultant's and Construction Manager's additional services and expenses made necessary by such default, neglect, or failure. This action by the City and amounts charged to Contractor are both subject to prior approval of City Engineer. If payments, then or thereafter due Contractor, are not sufficient to cover these amounts, Contractor shall pay the difference to the City.

2.5.2 Notwithstanding the City's right to carry out work, maintenance and protection of the Work remains Contractor's responsibility, as provided in the Contract.

## ARTICLE 3 - CONTRACTOR

3.1 *RESPONSIBILITIES*

3.1.1 Contractor shall maintain office with agent in the greater City of Houston area during the Contractor's performance under the Contract. Contractor shall file its street address with City Engineer.

3.1.2 Contractor and Contractor's employees shall not give or lend money or anything of value to an officer or employee of the City. Should this Paragraph 3.1.2 be violated, City Engineer may terminate the Contract under Section 14.1.

3.2 *REVIEW OF CONTRACT AND FIELD CONDITIONS BY CONTRACTOR*

3.2.1 Contractor shall carefully study and compare documents contained in the Contract with each other and with information furnished by the City pursuant to Section 2.2 and shall immediately report, in writing, any errors, inconsistencies, or omissions to City Engineer. If work is affected, Contractor shall obtain a written interpretation or clarification from City Engineer before proceeding with the affected work. However, Contractor will not be liable to the City for failure to report an error, inconsistency, or omission in the Contract unless Contractor had actual knowledge or should have had knowledge of the error, inconsistency, or omission.

3.2.2 Contractor shall take field measurements and verify field conditions, and shall carefully compare the conditions and other information known to Contractor with the Contract, before commencing activities. Contractor shall immediately report, in writing, to City Engineer for interpretation or clarification of discrepancies, inconsistencies, or omissions discovered during this process.

3.2.3 Contractor shall make a reasonable attempt to understand the Contract before requesting interpretation from City Engineer.

3.3 *SUPERVISION AND CONSTRUCTION PROCEDURES*

3.3.1 Contractor shall supervise, direct, and inspect the Work competently and efficiently, devoting the attention and applying the skills and

expertise as necessary to perform the Work in accordance with the Contract. Contractor is solely responsible and has control over construction means, methods, techniques, sequences, and procedures of construction; for safety precautions and programs in connection with the Work; and for coordinating all work under the Contract.

3.3.2 Regardless of observations or inspections by the City or City's consultants, Contractor shall perform and complete the Work in accordance with the Contract and submittals approved pursuant to Section 3.18. The City is not liable or responsible to Contractor or Surety for work performed by Contractor that is not in accordance with the Contract regardless of whether discovered during construction or after acceptance of the Work.

3.4 *SUPERINTENDENT*

3.4.1 Contractor shall employ a competent Superintendent and necessary assistants who shall be present at the site during performance of the Work. Communications given to Superintendent are binding on the Contractor.

3.4.2 Contractor shall notify City Engineer in writing of its intent to replace the Superintendent. Contractor may not replace the Superintendent if City Engineer makes a reasonable objection in writing.

3.5 *LABOR*

3.5.1 Contractor shall provide competent, qualified personnel to survey and lay out the Work and perform construction as required by the Contract. The City may, by written notice, require Contractor to remove from the Work any employee of Contractor or Subcontractors to whom City Engineer makes reasonable objection.

3.5.2 Contractor shall comply with the applicable Business Enterprise Policy set out in this Agreement and in the Supplementary Conditions, as set out in Chapter 15, Article V of the City of Houston Code of Ordinances.

3.5.3 When Original Contract Price is greater than $1,000,000, Contractor shall make Good Faith Efforts to award subcontracts or supply agreements in at least the percentages set out in the Supplementary Conditions for Business Enterprise Policy. Contractor acknowledges that it has reviewed the requirements for Good Faith Efforts on file with the City's Office of Business Opportunity and shall comply with them.

3.5.3.1 Contractor shall require written subcontracts with Business Enterprises and shall submit all disputes with Business Enterprises to voluntary mediation. Business Enterprise subcontracts complying with City Code of Ordinances Chapter 15, Article II must contain the terms set out in Subparagraph 3.5.3.2. If Contractor is an individual person, as distinguished from a corporation, partnership, or other legal entity, and the amount of the subcontract is $50,000 or less, the subcontract must also be signed by the attorneys of the respective parties.

3.5.3.2 Contractor shall ensure that subcontracts with Business Enterprise firms are clearly labeled **"THIS CONTRACT MAY BE SUBJECT TO MEDIATION ACCORDING TO THE TEXAS ALTERNATIVE DISPUTE RESOLUTION ACT"** and contain the following terms:

.1 (Business Enterprise) may not delegate or subcontract more than 50 percent of work under this subcontract to any other subcontractor without the express written consent of the City's OBO Director (the "Director").

.2 (Business Enterprise) shall permit representatives of the City of Houston, at all reasonable times, to perform (1) audits of the books and records of the Subcontractors and Suppliers, and (2) inspections of all places where work is to be undertaken in connection with this subcontract. (Business Enterprise) shall keep the books and records available for this purpose for at least four years after the end of its performance under this subcontract. Nothing in this provision shall affect the time for bringing a cause of action nor the applicable statute of limitations.

.3 Within five business days of execution of this subcontract, Contractor and (Business Enterprise) shall designate in writing to the Director an agent for receiving any notice required or permitted to be given pursuant to Chapter 15 of the Houston City Code of Ordinances, along with the street and mailing address and phone number of the agent.

3.5.4 The requirements and terms of the City of Houston Pay or Play Program, as set out in Executive Order 1-7 and Ordinance 2007-0534, are incorporated into the Contract for all purposes. Contractor shall comply with the terms and conditions of the Pay or Play Program as they are set out at the time of City Council approval of this

agreement. IF CONTRACTOR DOES NOT PAY IN ACCORDANCE WITH THE PAY OR PLAY PROGRAM WITHIN 30 DAYS OF THE DATE CITY ENGINEEER SENDS CONTRACTOR WRITTEN NOTIFICATION, CITY CONTROLLER MAY DEDUCT FUNDS UP TO THE AMOUNT OWED FROM ANY PAYMENTS OWED TO CONTRACTOR UNDER THIS AGREEMENT, AND CONTRACTOR WAIVES ANY RECOURSE.

3.6 *PREVAILING WAGE RATES*

3.6.1 Contractor shall comply with governing statutes providing for labor classification of wage scales for each craft or type of laborer, worker, or mechanic.

3.6.2 Prevailing wage rates applicable to the Work may be one or a combination of the following wage rates identified in Division 00:

- .1 Federal Wage Rate General Decisions
  - .1 Highway Rates
  - .2 Building Rates
  - .3 Heavy Construction Rates
  - .4 Residential Rates
- .2 City Prevailing Wage Rates
  - .1 Building Construction Rates
  - .2 Engineering Construction Rates
  - .3 Asbestos Worker Rates

3.6.3 Each week Contractor shall submit to the City's Mayor's Office of Business Opportunity certified copies of payrolls showing classifications and wages paid by Contractor, Subcontractors, and Suppliers for each employee under the Contract, for any day included in the Contract.

3.7 *LABOR CONDITIONS*

3.7.1 In the event of labor disputes affecting Contractor or Contractor's employees, Contractor shall utilize all possible means to resolve disputes in order that the Work not be delayed to any extent. These means will include seeking injunctive relief and filing unfair labor practice charges, and any other action available to Contractor.

3.7.2 When Contractor has knowledge that any actual or potential labor dispute is delaying or is threatening to delay timely performance of the Work, Contractor shall immediately notify City Engineer in writing. No Claims will be accepted by City Engineer for costs incurred as a result of jurisdictional or labor disputes.

3.8 *DRUG DETECTION AND DETERRENCE*

3.8.1 It is the policy of the City to achieve a drug-free work force and to provide a workplace that is free from the use of illegal drugs and alcohol. It is also the policy of the City that manufacture, distribution, dispensation, possession, sale, or use of illegal drugs or alcohol by contractors while on the City's premises is prohibited. By executing the Contract, Contractor represents and certifies that it meets and will comply with all requirements and procedures set forth in the Mayor's Policy on Drug Detection and Deterrence, City Council Motion No. 92-1971 ("Mayor's Policy") and the Mayor's Drug Detection and Deterrence Procedures for Contractors, Executive Order No. 1-31, (Revised) ("Executive Order"). Mayor's Policy is on file in the office of the City Secretary. Copies of Executive Order may be obtained at the location specified in the Advertisement for Bids.

3.8.1.1 The Executive Order applies to the City's contracts for labor or services except the following:

- .1 contracts authorized by Emergency Purchase Orders,
- .2 contracts in which imposition of requirements of the Executive Order would exclude all potential bidders or proposers, or would eliminate meaningful competition for the Contract,
- .3 contracts with companies that have fewer than 15 employees during any 20-week period during a calendar year and no safety impact positions,
- .4 contracts with non-profit organizations providing services at no cost or reduced cost to the public, and
- .5 contracts with federal, state, or local governmental entities.

3.8.1.2 Prior to execution of the Contract, Contractor shall have filed with the City:

- .1 a Drug Policy Compliance Agreement form (Attachment "A" to the Executive Order), and
- .2 a copy of Contractor's drug free workplace policy, and
- .3 a written designation of all safety impact positions, if applicable, or a Contractor's Certification of a No Safety Impact Positions form (Attachment "C" to the Executive Order).

3.8.1.3 Every six months during performance of the Contract and upon completion of the Contract, Contractor shall file a Drug Policy Compliance Declaration form (Attachment "B" to the Executive Order). The Contractor shall submit the Drug Policy Compliance Declaration within 30 days of expiration of each six-month period of performance and within 30 days of completion of the Contract. The first six-month period shall begin on Date of Commencement of the Work.

3.8.1.4 Contractor shall have a continuing obligation to file updated designation of safety impact positions when additional safety impact positions are added to Contractor's employee workforce during performance of the Work.

3.8.1.5 Contractor shall require its Subcontractors and Suppliers to comply with the Mayor's Policy and Executive Order. Contractor is responsible for securing and maintaining required documents from Subcontractors and Suppliers for the City inspection throughout the term of the Contract.

3.8.1.6 Failure of Contractor to comply with requirements will be a material breach of the Contract entitling the City to terminate in accordance with Section 14.1.

3.9 *MATERIALS & EQUIPMENT*

3.9.1 Unless otherwise provided in the Contract, Contractor shall provide and assume full responsibility for Products, labor, transportation, construction equipment and machinery, tools, appliances, fuel, power, light, heat, telephone, water, sanitary facilities, transportation, temporary facilities, supplies, and other facilities and incidentals necessary for Furnishing, performing, testing, starting-up, and completing the Work.

3.9.1.1 Contractor, Subcontractors, and Suppliers shall use Ultra Low Sulfur Diesel Fuel in all diesel operating vehicles and motorized equipment utilized in performing the Work. Ultra Low Sulfur Diesel Fuel is defined as diesel fuel having 15 ppm or the applicable standard set by state or federal law or rules and regulations of the Texas Commission on Environmental Quality, or the Environmental Protection Agency, whichever is less in sulfur content. Off-road Ultra Low Sulfur Diesel Fuel may be used in lieu of on-road Ultra Low Sulfur Diesel Fuel. Contractor shall provide, upon request by City Engineer, proof that Contractor, Subcontractors, and Suppliers are using Ultra Low Sulfur Diesel Fuel.

3.9.2 Contractor shall provide Products that are:

.1 new, unless otherwise required or permitted by the Contract, and
.2 of specified quality.

If required by City Engineer, Contractor shall furnish satisfactory evidence, including reports of required tests, as to kind and quality of Products.

3.9.3 Contractor shall store Products in a safe, neat, compact, and protected manner. Contractor shall also store Products delivered during the work, along the right-of-way:

.1 so as to cause the least inconvenience to property owners, tenants, and general public; and
.2 so as not to block access to, or be closer than, three feet to any fire hydrant.

Contractor shall protect trees, lawns, walks, drives, streets, and other improvements that are to remain, from damage. If private or public property is damaged by Contractor, Contractor shall, at its sole expense, restore the damaged property to at least its original condition.

3.9.3.1 Contractor shall obtain City Engineer's approval for storage areas used for Products for which payment has been requested under Paragraph 9.6.1. Contractor shall provide the City access to the storage areas for inspection purposes. Products, once paid for by the City, become the property of the City and may not be removed from place of storage, without City Engineer's written permission except for a movement to the site. Contractor's Installation Floater, required under Section 11.2, shall cover all perils, including loss or damage to Products during storage, loading, unloading, and transit to the site.

3.10 *PRODUCT OPTIONS AND SUBSTITUTIONS*

3.10.1 For Products specified by reference standards or by description only, Contractor may provide any Product meeting those standards or description.

3.10.2 For Products specified by naming one or more manufacturers with provision for substitutions or equal, Contractor may submit a request for substitution for any manufacturer not named.

3.10.3 City Engineer will consider requests for substitutions only within the first 15 percent of Contract Time, or first 90 days after date of Notice to Proceed, whichever is less.

3.10.4 Contractor shall document each request for substitution with complete data

substantiating compliance of proposed substitution with the Contract.

3.10.5 A request for substitution constitutes a representation that Contractor:

.1 has investigated the proposed Product and determined that it meets or exceeds the quality level of the specified Product;

.2 shall provide the same warranty for the substitution as for the specified Product;

.3 shall coordinate installation of the proposed substitution and make changes to other work which may be required for the Work to be completed, with no additional cost or increase in time to the City;

.4 confirms that cost data is complete and includes all related costs under the Contract;

.5 waives Claim for additional costs or time extensions that may subsequently become apparent; and

.6 shall provide review or redesign services by a design consultant with appropriate professional license and shall obtain re-approval and permits from authorities.

3.10.6 City Engineer will not consider and will not approve substitutions when:

.1 they are indicated or implied on Shop Drawing or Product Data submittals without separate written request; or

.2 acceptance will require revision to the Contract.

3.10.7 City Engineer may reject requests for substitution, and his decision will be final and binding on the Parties.

3.11 *CASH ALLOWANCES*

3.11.1 Contract Price includes Cash Allowances as identified in the Contract.

3.11.2 The City will pay the actual costs of Cash Allowance item exclusive of profit, overhead or administrative costs. If actual costs exceed the Cash Allowance, City Engineer must approve a Change Order for the additional costs.

3.12 *WARRANTY*

3.12.1 Contractor warrants to the City that Products furnished under the Contract are:

.1 free of defects in title;

.2 of good quality; and

.3 new, unless otherwise required or permitted by the Contract.

If required by the City Engineer, Contractor shall furnish satisfactory evidence as to kind, quality and title of Products, and that Products conform to requirements of the Contract.

3.12.2 In the event of a defect in a Product, either during construction or warranty period, Contractor shall take appropriate action with manufacturer of Product to assure correction or replacement of defective Product with minimum delay.

3.12.3 Contractor warrants that the Work is free of defects not inherent in the quality required or permitted, and that the Work does conform with the requirements of the Contract. Contractor further warrants that the Work has been performed in a thorough and workmanlike manner.

3.12.4 Contractor warrants that the Work is free of concentrations on polychlorinated biphenyl (PCB) and other substances defined as hazardous by the Comprehensive Environmental Response Compensation and Liability Act (CERCLA) or any other applicable law or regulation.

3.12.5 Work not conforming to requirements of Section 3.12, including substitutions not properly approved and authorized, may be considered nonconforming work.

3.12.6 Contractor's warranty excludes remedy for damage or defect caused by:

.1 improper or insufficient maintenance by the City;

.2 normal wear and tear under normal usage; or

.3 claim that hazardous material was incorporated into the Work, if that material was specified in the Contract.

3.12.7 Contractor warrants that title to all work covered by Contractor's request for payment passes to the City upon incorporation into the Work or upon Contractor's receipt of payment, whichever occurs first. The Contractor further warrants that the title is free of all liens, claims, security interests or other interests ("Encumbrances"). If not, upon written demand from City Engineer, Contractor shall immediately take legal action necessary to remove Encumbrances.

3.13 *TAXES*

3.13.1 Contractor shall pay all sales, consumer, use, and similar taxes, which are in effect or scheduled to go into effect on or before bids are received, related to work provided by Contractor.

3.13.2 Contractor shall obtain, and require Subcontractors and Suppliers to obtain, necessary permits from the state and local taxing authorities to perform contractual obligations under the Contract, including sales tax permits.

3.13.3 The City is exempt from the Federal Transportation and Excise Tax. Contractor shall comply with federal regulations governing the exemptions.

3.13.4 Products incorporated into the Work are exempt from state sales tax according to provisions of the TEX. TAX CODE ANN. CH. 151, Subsection H.

3.14 *PERMITS, FEES, AND NOTICES*

3.14.1 Unless otherwise provided in the Contract, Contractor shall secure and pay for all construction permits, licenses, and inspections:

.1 necessary for proper execution and completion of the Work; and

.2 legally required at time bids are received.

3.15 *CONSTRUCTION SCHEDULES*

3.15.1 On receipt of Notice to Proceed, Contractor shall promptly prepare and submit construction schedule for the Work for City Engineer's review. The schedule must reflect the minimum time required to complete the Work not to exceed Contract Time.

3.15.2 Contractor shall give 24-hour written notice to City Engineer before commencing work or resuming work where work has been stopped. Contractor shall also give the same notice to inspectors.

3.15.3 Contractor shall incorporate milestones specified in Summary of Work Specification into the construction schedule. Contractor's failure to meet a milestone, as determined by City Engineer, may be considered a material breach of the Contract.

3.15.4 Each month, Contractor shall submit to City Engineer a copy of an updated construction schedule indicating actual progress, incorporating applicable changes, and indicating courses of action required to assure completion of the Work within Contract Time.

3.15.5 Contractor shall keep a current schedule of submittals that coordinates with the construction schedule, and shall submit the initial schedule of submittals to City Engineer for approval.

3.16 *DOCUMENTS AND SAMPLES AT THE SITE*

3.16.1 Contractor shall maintain at the site, and make available to City Engineer, one record copy of Drawings, Specifications, and Modifications. Contractor shall maintain the documents in good order and marked currently to record changes and selections made during construction. In addition, Contractor shall maintain at the site, approved Shop Drawings, Product Data, Samples, and similar submittals, which will be delivered to City Engineer prior to final inspection as required in Paragraph 9.11.4.

3.16.2 Contractor shall maintain all books, documents, papers, accounting records, and other relevant documentation pursuant to the Work and shall make the books, documents, papers, and accounting records available to representatives of the City for review and audits during the Contract term and for the greater of three years following Date of Substantial Completion or until all litigation or audits are fully resolved.

3.16.3 Contractor shall provide to City Attorney all documents and records that City Attorney deems necessary to assist in determining Contractor's compliance with the Contract, with the exception of those documents made confidential by federal or state law or regulation.

3.17 *MANUFACTURER'S SPECIFICATIONS*

3.17.1 Contractor shall handle, store, and Install Products and perform all work in the manner required by Product manufacturer. Should the Contract and manufacturer's instructions conflict, Contractor shall report conflict to City Engineer for resolution prior to proceeding with the affected work.

3.17.2 References in the Contract to the manufacturer's specifications, directions, or recommendations, mean manufacturer's current published documents in effect as of date of receipt of bids, or in the case of a Modification, as of date of Modification.

*3.18 SHOP DRAWINGS, PRODUCT DATA, AND SAMPLES*

3.18.1 Shop Drawings, Product Data, and Samples are not part of the Contract. The purpose of Contractor submittals is to demonstrate, for those portions of the Work for which submittals are required, the way Contractor proposes to conform to information given and design concept expressed in the Contract.

3.18.2 Contractor shall submit to Project Manager for review the Shop Drawings, Product Data, and Samples, which are required by the Contract. Review by Project Manager is subject to limitations of Paragraph 4.1.4. Contractor shall transmit the submittals to the Project Manager with reasonable promptness and in a sequence, so as to cause no delay in the Work or in activities of the City or of separate contractors. Contractor shall transmit submittals in time to allow a minimum of 30 days for Project Manager's review prior to date Contractor needs reviewed submittals returned. This time may be shortened for a particular job requirement if approved by Project Manager in advance of submittal.

3.18.3 Contractor shall certify that the content of submittals conforms to the Contract without exception by affixing Contractor's approval stamp and signature. By certifying and submitting Shop Drawings, Product Data, and Samples, Contractor represents, and Contractor's stamp of approval shall state, that Contractor has determined and verified materials, quantities, field measurements, and field construction criteria related to the submittal, and has checked and coordinated information contained within the submittals with requirements of the Contract.

3.18.4 Contractor may not perform any work requiring submittal and review of Shop Drawings, Product Data, or Samples until the submittal has been returned with appropriate review decision by the Project Manager. Contractor shall perform work in accordance with the review.

3.18.5 If Contractor performs any work requiring submittals prior to review and acceptance of the submittals by Project Manager, such work is at Contractor's risk and the City is not obligated to accept work if the submittals are later found to be unacceptable.

3.18.6 If, in the opinion of Project Manager, the submittals are incomplete, or demonstrate an inadequate understanding of the Work or lack of review by the Contractor, then submittals may be returned to the Contractor for correction and resubmittal.

3.18.7 Contractor shall direct specific attention in writing and on the resubmitted Shop Drawings, Product Data, or Samples to any additional proposed revisions, other than those revisions requested by Project Manager on previous submittals.

3.18.8 Contractor is not relieved of responsibility for deviations from requirements of the Contract by Project Manager's review of Shop Drawings, Product Data, or Samples unless Contractor has specifically informed Project Manager in writing of the deviation at the time of the submittal, and Project Manager has given written approval of the deviation.

3.18.9 When professional certification of performance criteria of Products is required by the Contract, the City may rely upon accuracy and completeness of the calculations and certifications.

3.18.10 For Product colors or textures to be selected by the City, Contractor shall submit all samples together to allow preparation of a complete selection schedule.

3.18.11 Contractor shall submit informational submittals, on which Project Manager is not expected to take responsive action, as required by the Contract.

3.18.12 Submittals made by Contractor which are not required by the Contract may be returned to Contractor without action.

*3.19 CULTURAL RESOURCES AND ENDANGERED SPECIES*

3.19.1 Contractor may not remove or disturb, or cause to be removed or disturbed, any historical, archaeological, architectural, or other cultural artifacts, relics, vestiges, remains, or objects of antiquity. If Contractor discovers one of these items, Contractor shall immediately notify City Engineer and further comply with the requirements of 13 Tex. Admin. Code Chs. 25 and 26 (2002), or successor regulation. Contractor shall protect site and cultural resources from further disturbance until professional examination can be made or until clearance to proceed is authorized in writing by City Engineer.

**3.19.2** Should either threatened or endangered plant or animal species be encountered,

Contractor shall cease work immediately in the area of encounter and notify City Engineer.

3.20 *CUTTING AND PATCHING*

3.20.1 Contractor is responsible for necessary cutting, fitting, and patching to accomplish the Work and shall suitably support, anchor, attach, match, and trim or seal materials to work of other contractors. Contractor shall coordinate the Work with work of other contractors to minimize conflicts, as provided in Article 6.

3.20.2 Contractor may not endanger work by cutting, digging, or other action, and may not cut or alter work of other contractors except by written consent of City Engineer and affected contractor.

3.21 *CLEANING*

3.21.1 Contractor shall perform daily cleanup of all dirt, debris, scrap materials and other disposable items resulting from Contractor's operations, whether on-site or off-site. Unless otherwise authorized in writing by City Engineer, Contractor shall keep all streets, access streets, driveways, areas of public access, walkways, and other designated areas clean and open at all times.

3.21.2 Failure of Contractor to maintain a clean site, including access streets, is the basis for City Engineer to issue a Notice of Noncompliance. Should compliance not be attained within the time period in the Notice of Noncompliance, City Engineer may authorize necessary cleanup to be performed by others and the cost of the cleanup will be deducted from monies due Contractor.

Contractor shall legally dispose off-site, all waste materials and other excess materials resulting from Contractor's operations.

3.22 *SANITATION*

3.22.1 Contractor shall provide and maintain sanitary facilities at site for use of all construction forces under the Contract. Newly-constructed or existing sanitary facilities may not be used by Contractor.

3.23 *ACCESS TO WORK AND TO INFORMATION*

3.23.1 Contractor shall provide the City, Design Consultant, testing laboratories, and governmental agencies which have jurisdictional interests, access to the Work in preparation and in progress wherever located. Contractor shall provide proper and safe conditions for the access.

3.23.2 If required by City Engineer, Contractor shall furnish information concerning character of Products and progress and manner of the Work, including information necessary to determine cost of the Work, such as number of employees, pay of employees, and time employees worked on various classes of the Work.

3.24 *TRADE SECRETS*

3.24.1 Contractor will not make any claim of ownership of trade secrets as to products used in the Work, or preparation of any mixture for the Work. City Engineer will at all times have the right to demand and Contractor shall furnish information concerning materials or samples of ingredients of any materials used, or proposed to be used, in preparation of concrete placed or other work to be done. Mixtures, once agreed on, shall not be changed in any manner without knowledge and consent of City Engineer. The City will make its best efforts to protect confidentiality of proprietary information.

3.25 *INDEMNIFICATION*

3.25.1 CONTRACTOR AGREES TO AND SHALL DEFEND, INDEMNIFY, AND HOLD THE CITY, ITS AGENTS, EMPLOYEES, OFFICERS, AND LEGAL REPRESENTATIVES (COLLECTIVELY THE "CITY") HARMLESS FOR ALL CLAIMS, CAUSES OF ACTION, LIABILITIES, FINES, AND EXPENSES (INCLUDING, WITHOUT LIMITATION, ATTORNEYS' FEES, COURT COSTS, AND ALL OTHER DEFENSE COSTS AND INTEREST) FOR INJURY, DEATH, DAMAGE, OR LOSS TO PERSONS OR PROPERTY SUSTAINED IN CONNECTION WITH OR INCIDENTAL TO PERFORMANCE UNDER THE CONTRACT INCLUDING, WITHOUT LIMITATION, THOSE CAUSED BY:

.1 CONTRACTOR'S AND/OR ITS AGENTS', EMPLOYEES', OFFICERS', DIRECTORS', CONTRACTORS', OR SUBCONTRACTORS' (COLLECTIVELY IN NUMBERED SUBPARAGRAPHS .1 through .3, "CONTRACTOR") ACTUAL OR ALLEGED NEGLIGENCE OR INTENTIONAL ACTS OR OMISSIONS;

.2 THE CITY'S AND CONTRACTOR'S ACTUAL OR ALLEGED CONCURRENT NEGLIGENCE, WHETHER CONTRACTOR IS IMMUNE FROM LIABILITY OR NOT;

.3 THE CITY'S AND CONTRACTOR'S ACTUAL OR ALLEGED STRICT PRODUCTS LIABILITY OR STRICT STATUTORY LIABILITY, WHETHER CONTRACTOR IS IMMUNE FROM LIABILITY OR NOT.

CONTRACTOR SHALL DEFEND, INDEMNIFY, AND HOLD THE CITY HARMLESS DURING THE TERM OF THE CONTRACT AND FOR FOUR YEARS AFTER THE CONTRACT TERMINATES. CONTRACTOR SHALL NOT INDEMNIFY THE CITY FOR THE CITY'S SOLE NEGLIGENCE.

3.25.2 NOTWITHSTANDING ANYTHING TO THE CONTRARY, THE LIABILITY OF CONTRACTOR FOR THE CITY'S CONCURRENT NEGLIGENCE SHALL NOT EXCEED $1,000,000.

3.26 *RELEASE AND INDEMNIFICATION – PATENT, COPYRIGHT, TRADEMARK, AND TRADE SECRET INFRINGEMENT*

3.26.1 UNLESS OTHERWISE SPECIFICALLY REQUIRED BY THE CONTRACT, CONTRACTOR AGREES TO AND SHALL RELEASE AND DEFEND, INDEMNIFY, AND HOLD HARMLESS THE CITY, ITS AGENTS, EMPLOYEES, OFFICERS, AND LEGAL REPRESENTATIVES (COLLECTIVELY THE "CITY") FROM ALL CLAIMS OR CAUSES OF ACTION BROUGHT AGAINST THE CITY BY ANY PARTY, INCLUDING CONTRACTOR, ALLEGING THAT THE CITY'S USE OF ANY EQUIPMENT, SOFTWARE, PROCESS, OR DOCUMENTS CONTRACTOR FURNISHES DURING THE TERM OF THE CONTRACT INFRINGES ON A PATENT, COPYRIGHT, OR TRADEMARK, OR MISAPPROPRIATES A TRADE SECRET. CONTRACTOR SHALL PAY ALL COSTS (INCLUDING, WITHOUT LIMITATION, ATTORNEYS' FEES, COURT COSTS, AND ALL OTHER DEFENSE COSTS, AND INTEREST) AND DAMAGES AWARDED.

3.26.2 CONTRACTOR SHALL NOT SETTLE ANY CLAIM ON TERMS WHICH PREVENT THE CITY FROM USING THE EQUIPMENT, SOFTWARE, PROCESS, OR PRODUCT WITHOUT THE CITY ENGINEER'S PRIOR WRITTEN CONSENT.

3.26.3 UNLESS OTHERWISE SPECIFICALLY REQUIRED BY THE CONTRACT, WITHIN 60 DAYS AFTER BEING NOTIFIED OF THE CLAIM, CONTRACTOR SHALL, AT ITS OWN EXPENSE, EITHER:

.1 OBTAIN FOR THE CITY THE RIGHT TO CONTINUE USING THE EQUIPMENT, SOFTWARE, PROCESS, OR PRODUCT, OR

.2 IF BOTH PARTIES AGREE, REPLACE OR MODIFY THEM WITH COMPATIBLE AND FUNCTIONALLY EQUIVALENT PRODUCTS.

IF NONE OF THESE ALTERNATIVES IS REASONABLY AVAILABLE, THE CITY MAY RETURN THE EQUIPMENT, SOFTWARE, OR PRODUCT, OR DISCONTINUE THE PROCESS, AND CONTRACTOR SHALL REFUND THE PURCHASE PRICE.

3.27 *INDEMNIFICATION PROCEDURES*

3.27.1 *Notice of Indemnification Claims:* If the City or Contractor receives notice of any claim or circumstances which could give rise to an indemnified loss, the receiving party shall give written notice to the other Party within 10 days. The notice must include the following:

.1 a description of the indemnification event in reasonable detail,

.2 the basis on which indemnification may be due, and

.3 the anticipated amount of the indemnified loss.

This notice does not estop or prevent the City from later asserting a different basis for indemnification or a different amount of indemnified loss than that indicated in the initial notice. If the City does not provide this notice within the 10-day period, it does not waive any right to indemnification except to the extent that Contractor is prejudiced, suffers loss, or incurs expense because of the delay.

3.27.2 *Defense of Indemnification Claims:*

.1 *Assumption of Defense:* Contractor may assume the defense of the claim at its own expense with counsel chosen by it that is reasonably satisfactory to the City. Contractor shall then control the defense and any negotiations to settle the claim. Within 10 days after receiving written notice of the indemnification request, Contractor must advise the City as to whether or not it will defend the claim. If Contractor does not assume the defense, the City shall assume and control the defense, and all defense expenses constitute an indemnified loss.

.2 *Continued Participation:* If Contractor elects to defend the claim, the City may

retain separate counsel to participate in, but not control, the defense and to participate in, but not control, any settlement negotiations. Contractor may settle the claim without the consent or agreement of the City, unless it:

.1 would result in injunctive relief or other equitable remedies or otherwise require the City to comply with restrictions or limitations that adversely affect the City;

.2 would require the City to pay amounts that Contractor does not fund in full; or

.3 would not result in the City's full and complete release from all liability to the plaintiffs or claimants who are parties to or otherwise bound by the settlement.

**3.28** ***CONTRACTOR DEBT***

**IF CONTRACTOR, AT ANY TIME DURING THE TERM OF THIS AGREEMENT, INCURS A DEBT, AS THE WORD IS DEFINED IN SECTION 15-122 OF THE HOUSTON CITY CODE OF ORDINANCES, IT SHALL IMMEDIATELY NOTIFY CITY CONTROLLER IN WRITING. IF CITY CONTROLLER BECOMES AWARE THAT CONTRACTOR HAS INCURRED A DEBT, IT SHALL IMMEDIATELY NOTIFY CONTRACTOR IN WRITING. IF CONTRACTOR DOES NOT PAY THE DEBT WITHIN 30 DAYS OF EITHER SUCH NOTIFICATION, CITY CONTROLLER MAY DEDUCT FUNDS IN AN AMOUNT EQUAL TO THE DEBT FROM ANY PAYMENTS OWED TO CONTRACTOR UNDER THIS AGREEMENT, AND CONTRACTOR WAIVES ANY RECOURSE THEREFOR. CONTRACTOR SHALL FILE A NEW AFFIDAVIT OF OWNERSHIP, USING THE FORM DESIGNATED BY CITY, BETWEEN FEBRUARY 1 AND MARCH 1 OF EVERY YEAR DURING THE TERM OF THE CONTRACT.**

## ARTICLE 4 - ADMINISTRATION OF THE CONTRACT

4.1 *CONTRACT ADMINISTRATION*

4.1.1 City Engineer will provide administration of the Contract and City Engineer is authorized to issue Change Orders, Work Change Directives, and Minor Changes in the Work.

4.1.2 City Engineer may act through Project Manager, Design Consultant, or Inspector. When the term "City Engineer" is used in the Contract, action by City Engineer is required unless City Engineer delegates his authority in writing. The City Engineer may not delegate authority to render decisions under Section 4.4.

The City does not have control over or charge of, and is not responsible for, supervision, construction, and safety procedures enumerated in Section 3.3. The City does not have control over or charge of and is not responsible for acts or omissions of Contractor, Subcontractors, or Suppliers.

4.1.3 The City and Design Consultant may attend project meetings and visit the site to observe progress and quality of the Work. The City and Design Consultant are not required to make exhaustive or continuous on-site inspections to check quality or quantity of the Work.

4.1.4 Project Manager will review and approve or take other appropriate action on Contractor's submittals, but only for limited purpose of checking for conformance with information given and design concept expressed in the Contract.

4.1.5 Project Manager's review of the submittals is not conducted for purpose of determining accuracy and completeness of other details, such as dimensions and quantities, or for substantiating instructions for installation or performance of Products, all of which remain the responsibility of Contractor.

4.1.6 Project Manager's review of submittals does not relieve Contractor of its obligations under Sections 3.3, 3.12, and 3.18. Review does not constitute approval of safety precautions or, unless otherwise specifically stated by Project Manager in writing, of construction means, methods, techniques, sequences, or procedures. Project Manager's review of a specific item does not indicate approval of an assembly of which the item is a component.

4.1.7 Based on field observations and evaluations, Project Manager will process Contractor's progress payments, certify amounts due Contractor, and issue Certificates for Payment in the amount certified.

4.1.8 Project Manager will receive and forward to City Engineer for his review and records, written warranties and related documents required by the Contract and assembled by Contractor.

4.1.9 Upon written request by Contractor or Project Manager, City Engineer will resolve matters

of interpretation of or performance of the Contract, which are not Claims. City Engineer's decisions are final and binding on the Parties.

4.1.10 City Engineer may reject work which does not conform to the Contract.

4.1.11 When City Engineer considers it necessary to implement the intent of the Contract, City Engineer may require additional inspection or testing of work in accordance with Paragraphs 13.6.3 and 13.6.4, whether such work is fabricated, Installed, or completed.

4.2 *COMMUNICATIONS IN ADMINISTRATION OF THE CONTRACT*

4.2.1 Except as otherwise provided in the Contract or when authorized by City Engineer in writing, Contractor shall communicate with Project Manager. Contractor shall communicate with Design Consultant, Design Consultant's subconsultants, and separate contractors through Project Manager. The City will communicate with Subcontractors and Suppliers through Contractor.

4.3 *CLAIMS AND DISPUTES*

4.3.1 *Documentation by Project Manager:* Contractor shall submit Claims, including those alleging an error or omission by Project Manager or Design Consultant, to Project Manager for documentation and recommendation to City Engineer.

4.3.2 *Decision of City Engineer:* Upon submission of Claim by Project Manager or Contractor, City Engineer will resolve Claims in accordance with Section 4.4.

4.3.3 *Time Limits on Claims:* Claims by Contractor must be made within 90 days after occurrence of event giving rise to the Claim.

4.3.4 *Continuing the Contract Performance:* Pending final resolution of a Claim including referral to non-binding mediation, unless otherwise agreed in writing, Contractor shall proceed diligently with the performance of the Contract and the City will continue to make payments in accordance with the Contract.

4.3.4.1 Pending final resolution of a Claim including referral to non-binding mediation, Contractor is responsible for safety and protection of physical properties and conditions at site.

4.3.5 *Claims for Concealed or Unknown Conditions:* Concealed or unknown physical conditions include utility lines, other man-made structures, storage facilities, Pollutants and Pollutant Facilities, and the like, but do not include conditions arising from Contractor operations, or failure of Contractor to properly protect and safeguard subsurface facilities. Concealed conditions also include naturally-occurring soil conditions outside the range of soil conditions identified through geotechnical investigations, but do not include conditions arising from groundwater, rain, or flood.

4.3.5.1 If conditions are encountered at the site which are Underground Facilities or otherwise concealed or unknown conditions which differ materially from:

.1 those indicated by the Contract; or
.2 conditions which Contractor could have discovered through site inspection, geotechnical testing, or otherwise;

then Contractor will give written notice to City Engineer no later than five days after Contractor's first observation of the condition and before condition is disturbed. Contractor's failure to provide notice constitutes a waiver of a Claim.

4.3.5.2 City Engineer will promptly investigate concealed or unknown conditions. If City Engineer determines that conditions at the site are not materially different and that no change in Contract Price or Contract Time is justified, City Engineer will notify Contractor in writing, stating reasons. If City Engineer determines the conditions differ materially and cause increase or decrease in Contractor's cost or time required for performance of part of the Work, City Engineer will recommend an adjustment in Contract Price or Contract Time, or both, as provided in Article 7. Opposition by a Party to the City Engineer's determination must be made within 21 days after City Engineer has given notice of the decision. If the Parties cannot agree on adjustment to Contract Price or Contract Time, adjustment is subject to further proceedings pursuant to Section 4.4.

4.3.6 *Claims for Additional Cost:* If Contractor wishes to make a Claim for increase in Contract Price, Contractor shall give written notice before proceeding with work for which Contractor intends to submit a Claim. Prior notice is not required for Claims relating to an emergency endangering life or property arising under Section 10.4.

4.3.6.1 Contractor may file a Claim in accordance with Section 4.4 if Contractor believes it has incurred additional costs, for the following reasons:

.1 written interpretation of City Engineer;
.2 order by City Engineer to stop the Work when Contractor is not at fault;
.3 suspension of the Work by City Engineer;
.4 termination of the Contract by City Engineer; or
.5 The City's non-compliance with another provision of the Contract.

4.3.6.2 No increase in Contract Price is allowed for delays or hindrances to the Work, except for direct and unavoidable extra costs to Contractor caused by failure of the City to provide information and services, or to make land and materials available, when required of the City under the Contract. Any increase claimed is subject to the provisions of Section 4.4 and Article 7.

4.3.6.3 The City is not liable for Claims for delay when Date of Substantial Completion occurs prior to expiration of Contract Time.

4.3.7 *Claims for Additional Time:* If Contractor wishes to make a Claim for an increase in Contract Time, Contractor shall give written notice as provided in Section 8.2. In case of continuing delay, only one Claim is necessary.

4.4 *RESOLUTION OF CLAIMS AND DISPUTES*

4.4.1 City Engineer will review Claims and take one or more of the following preliminary actions within 30 days of receipt of Claim:

.1 submit a suggested time to meet and discuss the Claim with City Engineer;
.2 reject Claim, in whole or in part, stating reasons for rejection;
.3 recommend approval of the Claim by the other Party;
.4 suggest a compromise; or
.5 take other actions as City Engineer deems appropriate to resolve the Claim.

4.4.2 City Engineer may request additional supporting data from claimant. Party making Claim shall, within 10 days after receipt of City Engineer's request, submit additional supporting data requested by City Engineer.

4.4.3 At any time prior to rendering a written decision regarding a Claim, City Engineer may refer Claim to non-binding mediation. If Claim is resolved, City Engineer will prepare and obtain all appropriate documentation. If Claim is not resolved, City Engineer will take receipt of Claim and begin a new review under Section 4.4.

4.4.4 If Claim is not referred to or settled in non-binding mediation, City Engineer may conduct a hearing and will render a written decision, including findings of fact, within 75 days of receipt of Claim, or a time mutually agreed upon by the Parties in writing. City Engineer may notify Surety and request Surety's assistance in resolving Claim. City Engineer's decision is final and binding on the Parties.

4.5 *CONDITION PRECEDENT TO SUIT; WAIVER OF ATTORNEY FEES AND INTEREST*

4.5.1 Neither the City nor Contractor may recover attorney fees for any claim brought in connection with this Contract.

4.5.2 Neither the City nor the Contractor may recover interest for any damages claim brought in connection with this Contract except as allowed by TEXAS LOCAL GOVERNMENT CODE Chapter 2251.

4.6 *INTERIM PAYMENT WAIVER & RELEASE*

4.6.1 In accordance with section 4.3, the Contractor shall use due diligence in the discovery and submission of any Claim against the City related to the Contractor's work.

4.6.2 The Contractor shall submit any Claim to the City not later than the 90th day after the occurrence of the event giving rise to the Claim.

4.6.3 Any failure to timely comply with the requirements of section 4.6.2 waives and releases any Claim when the Contractor submits an application for payment after the 90th day.

4.6.4 This waiver does not cover any retainage. In case of any conflict of law, this language shall be revised to the minimum extent necessary to avoid legal conflict. This waiver is made specifically for the benefit of the City.

## ARTICLE 5 - SUBCONTRACTORS AND SUPPLIERS

### 5.1 *AWARD OF SUBCONTRACTS OTHER CONTRACTS FOR PORTIONS OF THE WORK*

5.1.1 Contractor may not contract with a Subcontractor, Supplier, person, or entity that City Engineer has made a reasonable and timely objection to.

5.1.2 If City Engineer has a reasonable objection to person or entity proposed by Contractor, Contractor shall propose another with whom City Engineer has no reasonable objection.

5.1.3 Contractor shall execute contracts with approved Subcontractors, Suppliers, persons, or entities before the Subcontractors or Suppliers begin work under the Contract. All such contracts must be executed and sent to the OBO Director and Contracting Department within 30 days after the date of the Notice to Proceed and must include provisions set forth in Articles 3 and 5 of this Document.

5.1.4 Contractor shall notify City Engineer in writing of any proposed change of Subcontractor, Supplier, person, or entity previously accepted by the City.

5.1.5 Contractor shall make timely payments to Subcontractors and Suppliers for performance of the Contract. Contractor shall protect, defend, and indemnify the City from any claim or liability arising out of Contractor's failure to make the payments. Disputes relating to payment of Business Enterprise Subcontractors or Suppliers will be submitted to arbitration in same manner as other disputes under Business Enterprise subcontracts. Failure of Contractor to comply with decisions of arbitrator may be determined by City Engineer a material breach leading to termination of the Contract.

### 5.2 *CONTRACTOR RESPONSIBILITY FOR SUBCONTRACTORS*

5.2.1 Contractor is responsible to the City, as may be required by laws and regulations, for all acts and omissions of Subcontractors, Suppliers, and other persons and organizations performing or furnishing any of the Work under direct or indirect contract with Contractor.

5.2.2 Contractor shall make available to each proposed Subcontractor, prior to execution of subcontract, copies of the Contract to which Subcontractor is bound by this Section 5.2. Contractor shall notify Subcontractor of any terms of proposed subcontract which may be at variance with the Contract.

5.2.3 The City's approval of Subcontractor or Suppliers does not relieve Contractor of its obligation to perform, or to have performed to the full satisfaction of the City, the Work required by the Contract.

5.2.4 Unless there is a contractual relationship between Contractor and a Subcontractor or Supplier to the contrary, Contractor shall withhold no more retainage from Subcontractors or Suppliers than City withholds from Contractor under this Agreement. However, once a Subcontractor or Supplier completes performance, Contractor shall release all retainage to that Subcontractor or Supplier regardless if City continues to retain under this Agreement.

5.2.5 Prior to a Subcontractor or Supplier commencing performance for Contractor, Contractor shall meet with that Subcontractor or Supplier to provide instructions on invoicing procedures, dispute resolution procedures, and statutory rights, such as claim filing procedures under the McGregor Act. Subcontractors and Suppliers must certify to the City Engineer that Contractor has fulfilled the requirements of this Section.

## ARTICLE 6 - CONSTRUCTION BY THE CITY OR BY SEPARATE CONTRACTORS

### 6.1 *THE CITY'S RIGHT TO PERFORM CONSTRUCTION AND TO AWARD SEPARATE CONTRACTS*

6.1.1 The City may perform on-site construction operations related to the Work and as part of the Project with the City's workforce or with separate contractors.

### 6.2 *COORDINATION*

6.2.1 The City will coordinate activities of the City's workforce and of each separate contractor with work of Contractor, and Contractor shall cooperate with the City and separate contractors.

6.2.1.1 Contractor shall participate with other separate contractors and the City in reviewing their construction schedules when directed to do so by the Project Manager. Contractor shall make revisions to construction schedule and Contract Price deemed

necessary after joint review and mutual agreement. Construction schedules shall then constitute schedules to be used by Contractor, separate contractors, and the City, until subsequently revised.

6.2.2 Contractor shall afford to the City and to separate contractors reasonable opportunity for introduction and storage of their materials and equipment, and for performance of their activities.

6.2.3 If part of Contractor's work depends on proper execution of construction or operations by the City or a separate contractor, Contractor shall, prior to proceeding with that portion of the Work, inspect the other work and promptly report to City Engineer apparent discrepancies or defects in the other construction that would render it unsuitable for the proper execution of the Work. Failure of Contractor to report apparent discrepancies or defects in the other construction shall constitute acknowledgment that the City's or separate contractor's completed or partially completed construction is fit and proper to receive Contractor's work, except as to discrepancies or defects not then reasonably discoverable.

6.3 *MUTUAL RESPONSIBILITY*

6.3.1 The responsible party bears the costs caused by delays, by improperly timed activities, or by nonconforming construction.

6.3.2 Contractor shall promptly remedy damage caused by Contractor to completed or partially completed construction or to property of the City or separate contractor.

6.3.3 Claims or disputes between Contractor and other City contractors, or subcontractors of other City contractors, working on the Project must be submitted to binding arbitration in accordance with Construction Industry Arbitration Rules of the American Arbitration Association upon demand by any party to the dispute or by the City.

6.4 *THE CITY'S RIGHT TO CLEAN UP*

6.4.1 If dispute arises among Contractor, separate contractors, and the City as to responsibility under their respective contracts for maintaining premises and surrounding area free from waste materials and rubbish as described in Section 3.21, the City may clean up and allocate cost among those responsible, as determined by City Engineer.

## ARTICLE 7 - CHANGES IN THE WORK

7.1 *CHANGES*

7.1.1 Changes in scope of the Work, subject to limitations in Article 7 and elsewhere in the Contract, may be accomplished without invalidating the Contract, or without notifying Surety by:

.1 Change Order;
.2 Work Change Directive; or
.3 Minor Change in the Work.

7.1.2 The following types of Change Orders require City Council approval:

.1 a single Change Order that exceeds five percent of Original Contract Price,
.2 a Change Order which, when added to previous Change Orders, exceeds five percent of Original Contract Price,
.3 a Change Order, in which the total value of increases outside of the general scope of work approved by City Council, when added to increases outside the general scope of work approved by City Council in previous Change Orders, exceeds 40 percent of the Original Contract Price, even if the net increase to the Original Contract Price is five percent or less.
In this context, "increase" means an increase in quantity resulting from the addition of locations not within the scope of work approved by City Council, or the addition of types of goods or services not bid as unit price items.

Nothing in this Section is intended to permit an increase of the Contract Price in excess of the limit set out in TEX. LOC. GOV'T CODE ANN. §252.048 or its successor statute.

7.1.3 Contractor shall proceed promptly to execute changes in the Work provided in Modifications, unless otherwise stated in the Modification.

7.2 *WORK CHANGE DIRECTIVES*

7.2.1 A Work Change Directive cannot change Contract Price or Contract Time, but is evidence that the Parties agree that a change, ordered by directive, will be incorporated in a subsequently issued Change Order as to its effect, if any, on Contract Price or Contract Time.

7.2.2 Failure by Contractor to commence work identified in a Work Change Directive within the time specified by City Engineer, or to complete the

work in a reasonable period of time, may be determined by City Engineer to be a material breach of Contract.

7.2.3 A Work Change Directive is used in the absence of total agreement of the terms of a Change Order. Interim payments are made in accordance with Paragraph 9.6.1.

7.2.4 If Contractor signs a Work Change Directive, then Contractor agrees to its terms including adjustment in Contract Price and Contract Time or method for determining them. Agreement by the Parties to adjustments in Contract Price and Contract Time are immediately recorded as a Change Order.

7.2.5 City Engineer, by Work Change Directive, may direct Contractor to take measures as necessary to expedite construction to achieve Date of Substantial Completion on or before expiration of Contract Time. When the Work is expedited solely for convenience of the City and not due to Contractor's failure to prosecute timely completion of the Work, then Contractor is entitled to an adjustment in Contract Price equal to actual costs determined in accordance with Article 7.

7.3 *ADJUSTMENTS IN CONTRACT PRICE*

7.3.1 Adjustments in Contract Price are accomplished by Change Order and are based on one of the following methods:

.1 mutual acceptance of fixed price, properly itemized and supported by sufficient data to permit evaluation;
.2 unit prices stated in the Contract or subsequently agreed upon;
.3 cost to be determined in a manner agreed upon by the Parties and mutually acceptable fixed or percentage fee; or
.4 as provided in Paragraph 7.3.2.

7.3.2 If Contractor does not agree with a change in Contract Price or Contract Time or the method for adjusting them specified in the Work Change Directive within 21 days from date of the Work Change Directive's issuance, method and adjustment are determined by City Engineer. If Project Manager or Contractor disagree with City Engineer's determination they then may file a Claim in accordance with Section 4.4.

7.3.2.1 If City Engineer determines a method and adjustment in Contract Price under Paragraph 7.3.2, Contractor shall provide, in a form as City Engineer may prescribe, appropriate supporting data for items submitted under Paragraph 7.3.2. Failure to submit the data within 21 days of request for the data by City Engineer shall constitute waiver of a Claim.

7.3.2.2 Unless otherwise provided in the Contract, costs for the purposes of this Paragraph 7.3.2 are limited to the following:

.1 costs of labor, including labor burden as stated below for social security, unemployment insurance, customary and usual fringe benefits required by agreement or custom, and Workers' Compensation insurance;
  .1 the maximum labor burden applied to costs of labor for changes in the Work is 55 percent;
.2 costs of materials, supplies, and equipment, including cost of transportation, whether incorporated or consumed;
.3 rental costs of machinery and equipment, exclusive of hand tools, whether rented from Contractor or others, with prior approval of City Engineer;
.4 costs of premiums for Bonds and insurance and permit fees related to the change in the Work;
.5 additional costs of direct supervision of work and field office personnel directly attributable to the change; and
.6 allowances for overhead and profit as stated below.
  .1 the maximum allowances for overhead and profit on increases due to Change Orders:
  .2 for changes in the Work performed by Contractor and Subcontractors, allowance for overhead and profit are applied to an amount equal to cost of all additions less cost of all deletions to the Work. Allowance for overhead to Contractor and first tier Subcontractors on changes performed by Subcontractors are applied to an amount equal to the sum of all increases to the Work by applicable Subcontractors.

| | Overhead | Profit |
|---|---|---|
| to Contractor for change in the Work performed by Subcontractors: | 10 percent | 0 percent |
| to first tier Subcontractors for change in the Work performed by its Subcontractors: | 10 percent | 0 percent |
| to Contractor and Subcontractor for change in the Work performed by their respective firms: | 10 percent | 5 percent |

7.3.3 If the City deletes or makes a change, which results in a net decrease in Contract Price, the City is entitled to a credit calculated in accordance with Paragraphs 7.3.1 and 7.3.2 and Subparagraphs 7.3.2.1, and 7.3.2.2.1 through 7.3.2.2.5. When both additions and credits covering related work or substitutions are involved in a change, allowance for overhead and profit is figured on the basis of a net increase, if any, with respect to that change in accordance with Subparagraph 7.3.2.2.6.

7.3.4 When Contractor agrees with the determination made by City Engineer concerning adjustments in Contract Price and Contract Time, or the Parties otherwise reach agreement upon the adjustments, the agreement will be immediately recorded by Change Order.

7.4 *MINOR CHANGES IN THE WORK*

7.4.1 A Minor Change in Work is binding on the Parties. Contractor shall acknowledge, in a written form acceptable to City Engineer, that there is no change in Contract Time or Contract Price and shall carry out the written orders promptly.

## ARTICLE 8 - TIME

8.1 *PROGRESS AND COMPLETION*

8.1.1 Time is of the essence in the Contract. By executing the Contract, Contractor agrees that Contract Time is a reasonable period for performing the Work.

8.1.2 *Computation of Time:* In computing any period of time prescribed or allowed by the General Conditions, the day of the act, event, or default after which designated period of time begins to run is not to be included. Last day of the period so computed is to be included, unless it is a Sunday or Legal Holiday, in which event the period runs until end of next day which is not a Sunday or Legal Holiday. Sundays and Legal Holidays are considered to be days and are to be included in all other time computations relative to Contract Time.

8.1.3 Contractor may not commence the Work prior to the effective date of insurance and Bonds required by Article 11.

8.1.4 Contractor shall proceed expeditiously and without interruption, with adequate forces, and shall achieve Date of Substantial Completion within Contract Time.

8.1.5 Should progress of the Work fall behind construction schedule, except for reasons stated in Paragraph 8.2.1, Contractor shall promptly submit at the request of Project Manager, updated construction schedule to City Engineer for approval. Contractor's failure to submit updated schedule may, at City Engineer's discretion, constitute a material breach of the Contract. Contractor shall take action necessary to restore progress by working the hours, including night shifts and lawful overtime operations as necessary, to achieve Date of Substantial Completion within Contract Time.

8.1.6 Except in connection with safety or protection of persons or the Work or property at the site or adjacent to the site, and except as otherwise indicated in the Contract, all the Work at the site will be performed Monday through Saturday between the hours of 7:00 a.m. and 7:00 p.m. Contractor may not perform work between 7:00 p.m. and 7:00 a.m., on a Sunday, or on a Legal Holiday, without giving City Engineer 24-hour prior written notice and receiving written consent of City Engineer.

8.2 *DELAYS AND EXTENSIONS OF TIME*

8.2.1 Contractor may request extension of Contract Time for a delay in performance of work that arises from causes beyond control and without fault or negligence of Contractor. Examples of these causes are:

.1 acts of God or of the public enemy;
.2 acts of government in its sovereign capacity;
.3 fires;
.4 floods;
.5 epidemics;
.6 quarantine restrictions;
.7 strikes;
.8 freight embargoes;
.9 unusually severe weather; and
.10 discovery of Pollutants or Pollutant Facilities at the site.

8.2.2 For any reason other than those listed in Section 4.3.6.2, if the Contractor's work is delayed in any manner or respect, the Contractor shall have no claim for damages and shall have no right of additional compensation from the City by reason of any delay or increased expense to the Contractor's work, except for an extension of time as provided in this provision.

8.2.3 Contractor may request an extension of Contract Time for delay only if:

.1 delay is caused by failure of Subcontractor or Supplier to perform or make progress; and

.2 cause of failure is beyond control of both Contractor and Subcontractor or Supplier.

8.2.4 Claims relating to Contract Time must be made in accordance with Paragraph 4.3.7.

8.2.5 Claims for extending or shortening Contract Time are based on written notice promptly delivered by the Party making Claim to other Party. Claim must accurately describe occurrence generating Claim, and a statement of probable effect on progress of the Work.

8.2.6 Claims for extension of Contract Time are considered only when a Claim is filed within the time limits stated in Paragraph 4.3.3.

.1 Notwithstanding paragraph 4.3.3, an extension of time for delays under this paragraph may be granted only upon written application by the Contractor within 48 hours from the claimed delay.

8.2.7 Written notice of Claim must be accompanied by claimant's written statement that adjustment claimed is entire adjustment to which claimant is entitled as a result of the occurrence of the event. When the Parties cannot agree, Claims for adjustment in Contract Time are determined by City Engineer in accordance with Section 4.4.

8.2.8 Adjustments to Contract Time are accomplished by Change Order.

## ARTICLE 9 - PAYMENTS AND COMPLETION

### 9.1 *UNIT PRICE WORK*

9.1.1 Where the Contract provides that all or part of the Work is based on Unit Prices, the Original Contract Price includes, for all Unit Price work, an amount equal to the sum of Unit Prices times Unit Price Quantities for each separately identified item of Unit Price work.

9.1.2 Each Unit Price includes an amount to cover Contractor's overhead and profit for each separately identified item.

9.1.3 The Contractor may not make a Claim against the City for excess or deficiency in Unit Price Quantities provided in the Contract, except as provided in Subparagraph 9.1.4. Payment at the prices stated in the Contract is in full for the completed work. Contractor is not entitled to additional payment for materials, supplies, labor, tools, machinery and all other expenditures incidental to satisfactory completion of the Work.

9.1.4 City Engineer may increase or decrease quantities of the Work within limitations stated in Paragraph 7.1.2. Contractor is entitled to payment for actual quantities of items provided at Unit Prices set forth in the Contract.

9.1.5 Where the final quantity of work performed by Contractor on Major Unit Price Work item differs by more than 25 percent from quantity of the item stated in the Contract, a Party may request an adjustment in Unit Price, for the portion that differs by more than 25 percent, by a Change Order under Section 7.3.

### 9.2 *ESTIMATES FOR PAYMENT, UNIT PRICE WORK*

9.2.1 Following the day of each month indicated in the Contract, Project Manager will prepare a Certificate for Payment for the preceding monthly period based on estimated units of work completed. Prior to preparing Certificate of Payment, Contractor shall have submitted to City Engineer on a form approved by the Director of the Mayor's Office of Business Opportunity, evidence satisfactory to the City Engineer of payments made to Subcontractors and Suppliers for the month preceding the month for which the Certificate for Payment is prepared.

9.2.2 Before final completion, City Engineer will review and confirm with Contractor the actual final installed Unit Price quantities. City Engineer's determination of actual final installed Unit Price quantities will be included in the final Certificate for Payment and any previous underpayments and overpayments will be reconciled with the actual final Unit Price quantities. Contractor shall file written notice of intent to appeal, if any, City Engineer's

determination within 10 days of receipt of final Certificate for Payment. Upon expiration of the 10-day period, City Engineer's decision is final and binding on the Parties. If Contractor submits notice within the 10-day period, Contractor shall submit a Claim in accordance with Section 4.4.

9.3 *STIPULATED PRICE WORK*

9.3.1 For work contracted on a Stipulated Price basis, 10 days before submittal of first Application for Payment, Contractor shall submit to City Engineer a Schedule of Values allocated to various portions of the Work, prepared in the form and supported by the data as City Engineer may require to substantiate its accuracy. This schedule, as approved by City Engineer, is used as a basis for approval of Contractor's Applications for Payment.

9.4 *APPLICATIONS FOR PAYMENT, STIPULATED PRICE WORK*

9.4.1 For work contracted on a Stipulated Price basis, Contractor shall submit Applications for Payment to City Engineer each month on a form acceptable to City Engineer in accordance with Schedule of Values. Application must indicate percentages of completion of each portion of the Work listed in Schedule of Values as of the end of the period covered by the Application for Payment.

9.4.2 Applications for Payment must be supported by substantiating data as City Engineer may require and must reflect retainages as provided below. Evidence satisfactory to the City Engineer of payments made to Subcontractors and Suppliers for the month preceding the month for which the Application for Payment is submitted must accompany each Application for Payment on a form approved by the Director of Mayor's Office of Business Opportunity. Application must be sworn and notarized.

9.5 *CERTIFICATES FOR PAYMENT*

9.5.1 City Engineer will, within 10 days after the date specified in the Contract for Unit Price work, or upon receipt of Contractor's Application for Payment for Stipulated Price work, issue a Certificate for Payment for work based on amount which City Engineer determines is properly due, with copy to Contractor.

9.5.2 Unless otherwise provided in the Contract, payment for completed work and for properly stored Products is conditioned upon compliance with procedures satisfactory to City Engineer to protect the City's interests. Procedures will include applicable insurance, storage, and transportation to site for materials and equipment stored off-site. Contractor is responsible for maintaining materials and equipment until Date of Substantial Completion.

9.5.3 Contractor shall document its use of Ultra Low Sulfur Diesel Fuel by providing invoices and receipts evidencing Contractor's use.

9.6 *COMPUTATIONS OF CERTIFICATES FOR PAYMENT*

9.6.1 Subject to the provisions of the Contract, the amount of each Certificate for Payment is calculated as follows:

.1 that portion of Contract Price allocated to completed work as determined by:
  .1 multiplying the percentage of completion of each portion of the Work listed in the Schedule of Values by the value of that portion of the Work, or
  .2 multiplying Unit Price quantities Installed times the Unit Prices listed in the Contract;
.2 plus progress payments for completed work that has been properly authorized by Modifications;
.3 less retainage of five percent;
.4 plus actual costs, properly substantiated by certified copies of invoices and freight bills, of non-perishable materials and equipment delivered and properly stored, if approved in advance by Project Manager, less 15 percent;
.5 less any previous payments by the City.

9.7 *DECISIONS TO WITHHOLD CERTIFICATION*

9.7.1 City Engineer may decline to certify payment and may withhold payment in whole or in part to the extent reasonably necessary to protect the City if, in City Engineer's opinion, there is reason to believe that:

.1 nonconforming work has not been remedied;
.2 the Work cannot be completed for unpaid balance of Contract Price;
.3 there is damage to the City or another contractor;
.4 the Work will not be completed within Contract Time and that unpaid balance will not be adequate to cover actual and liquidated damages;

.5 probable evidence that third party claims will be filed in court, in arbitration, or otherwise;

.6 Contractor has failed to make payments to Subcontractors or Suppliers for labor, material, or equipment; or

.7 Contractor has persistently failed to carry out work in accordance with the Contract.

.8 Contractor has not paid Subcontractors or Suppliers because of a payment dispute; or

.9 Contractor has failed to provide satisfactory evidence described in Paragraphs 9.2.1, 9.4.2, and 9.8.2.

9.7.2 When the above reasons for withholding certification are removed, certification will be made for amounts previously withheld.

9.7.3 City Engineer may decline to certify payment and may withhold request for payment in whole or in part upon failure of Contractor to submit initial construction schedule or monthly schedule updates, as required in Paragraphs 3.15.1 and 3.15.3.

9.8 *PROGRESS PAYMENTS*

9.8.1 The City will make payment, in an amount certified by City Engineer, within 20 days after City Engineer has issued a Certificate for Payment.

9.8.2 The City has no obligation to pay or to facilitate the payment to a Subcontractor or Supplier, except as may otherwise be required by law. Contractor shall comply with the prompt payment requirements of Chapter 2251 of the Government Code. State law requires payment of Subcontractors and Suppliers by Contractor within 7 calendar days of Contractor's receipt of payment from the City, unless there is a payment dispute between Contractor and a Subcontractor or Supplier evidenced on a form approved by the Director of Mayor's Office of Business Opportunity and submitted to the City Engineer each month with Application for Payment or Estimate for Payment. **CONTRACTOR SHALL DEFEND AND INDEMNIFY THE CITY FROM ANY CLAIMS OR LIABILITY ARISING OUT OF CONTRACTOR'S FAILURE TO MAKE THESE PAYMENTS.**

9.8.2.1 The City may, upon request and at the discretion of City Engineer, furnish to Subcontractor information regarding percentages of completion or the amounts applied for by Contractor, and action taken thereon by the City because of work done by the Subcontractor.

9.8.2.2 Contractor shall prepare and submit to City Engineer a Certification of Payment to Subcontractors and Suppliers form to be attached to each monthly Estimate for Payment or Application for Payment.

9.8.3 A Certificate for Payment, a progress payment, or partial or entire use or occupancy of the Work by the City, does not constitute acceptance of work which is not in accordance with the Contract.

9.9 *DATE OF SUBSTANTIAL COMPLETION*

9.9.1 When Contractor considers the Work, or a portion thereof designated by City Engineer, to be substantially complete, Contractor shall prepare and submit to Project Manager a comprehensive punch list of items to be completed or corrected. Failure to include an item on the punch list does not alter the responsibility of Contractor to comply with the Contract.

9.9.1.1 By submitting the punch list to Project Manager, Contractor represents that work on the punch list will be completed within the time provided for in Subparagraph 9.9.4.3.

9.9.2 Upon receipt of Contractor's punch list, Project Manager will inspect the Work, or designated portion thereof, to verify that the punch list contains all items needing completion or correction. If Project Manager's inspection discloses items not on Contractor's punch list, the items must be added to the punch list of items to be completed or corrected. If Project Manager's inspection reveals that Contractor is not yet substantially complete, Contractor shall complete or correct the deficiencies and request another inspection by Project Manager. The City may recover the costs of re-inspection from Contractor.

9.9.3 Prior to City Engineer's issuing a Certificate of Substantial Completion, Contractor shall also provide:

.1 Certificate of Occupancy for new construction, or Certificate of Compliance for remodeled work, as applicable, and

.2 compliance with Texas Accessibility Standards through state inspection of the Work, if required. If Contractor calls for inspection in a timely manner

and the inspection is delayed through no fault of Contractor, and City Engineer so confirms, City Engineer may, upon request by Contractor, add the inspection to the punch list in Paragraph 9.9.2 and issue a Certificate of Substantial Completion.

9.9.4 When the Work, or designated portion thereof, is determined by City Engineer to be sufficiently complete in accordance with the Contract so the City can occupy or utilize the Work, or designated portion thereof, for the purpose for which it is intended, City Engineer will prepare a Certificate of Substantial Completion that incorporates the punch list in Paragraph 9.9.2 and establishes:

.1 Date of Substantial Completion;

.2 responsibilities of the Parties for security, maintenance, heating, ventilating and air conditioning, utilities, damage to the Work, and insurance; and

.3 fixed time within which Contractor shall complete all items on punch list of items to be corrected accompanying the certificate.

9.9.5 Warranties required by the Contract shall commence on the Date of Substantial Completion unless otherwise provided by City Engineer in Certificate of Substantial Completion. Warranties may not commence on items not substantially completed.

9.9.6 After Date of Substantial Completion and upon application by Contractor and approval by City Engineer, the City may make payment, reflecting adjustment in retainage, if any, as follows:

.1 with the consent of Surety, the City may increase payment to Contractor to 96 percent of Contract Price, less value of items to be completed and accrued liquidated damages.

9.9.7 Contractor shall complete or correct the items in Paragraph 9.9.2 within the time period set out in the Certificate of Substantial Completion. If Contractor fails to do so, the City may issue a Notice of Noncompliance and proceed according to Section 2.5.

9.10 *PARTIAL OCCUPANCY OR USE*

9.10.1 The City may occupy or use any completed or partially completed portion of the Work at any stage, provided the occupancy or use is consented to by Contractor and Contractor's insurer and authorized by public authorities having jurisdiction over the Work. Consent of Contractor to partial occupancy or use may not be unreasonably withheld.

9.10.2 Immediately prior to the partial occupancy or use, Project Manager and Contractor shall jointly inspect the area to be occupied or portion of the Work to be used to determine and record condition of the Work.

9.10.3 Partial occupancy or use of a portion of the Work does not constitute acceptance of work not in compliance with requirements of the Contract.

9.11 *FINAL COMPLETION AND FINAL PAYMENT*

9.11.1 Contractor shall review the Contract and inspect the Work prior to Contractor notification to City Engineer that the Work is complete and ready for final inspection. Contractor shall submit affidavit that the Work has been inspected and that the Work is complete in accordance with requirements of the Contract.

9.11.2 Project Manager will make final inspection within 15 days after receipt of Contractor's written notice that the Work is ready for final inspection and acceptance. If Project Manager finds the Work has been completed in accordance with the Contract, Contractor shall submit items set out in Paragraph 9.11.4 and, for stipulated price contracts, a final Application for Payment. City Engineer will, within 10 days, issue Certificate of Final Completion stating that to the best of City Engineer's knowledge, information, and belief, the Work has been completed in accordance with the Contract, and will recommend acceptance of the Work by City Council.

9.11.3 Should work be found not in compliance with requirements of the Contract, City Engineer will notify Contractor in writing of items of noncompliance. Upon inspection and acceptance of the corrections by Project Manager, compliance with all procedures of Paragraph 9.11.2, and Contractor's submission of the items set out in Paragraph 9.11.4, the City Engineer will issue Certificate of Final Completion to Contractor as provided in Paragraph 9.11.2.

9.11.4 Contractor shall submit the following items to City Engineer before City Engineer will issue a Certificate of Final Completion:

.1 affidavit that payrolls, invoices for materials and equipment, and other indebtedness of Contractor connected with the Work, less amounts withheld by the City, have been paid or otherwise satisfied. If required by City Engineer, Contractor shall submit

further proof including waiver or release of lien or claims from laborers or Suppliers of Products;

.2 certificate evidencing that insurance required by the Contract to remain in force after final payment is currently in effect, will not be canceled or materially changed until at least 30 days written notice has been given to the City;

.3 written statement that Contractor knows of no substantial reason that insurance will not be renewable to cover correction and warranty period required by the Contract;

.4 consent of Surety to final payment; and

.5 copies of record documents, maintenance manuals, tests, inspections, and approvals.

Upon City Engineer's issuance of a Certificate of Final Completion, Contractor may request increase in payment to 99 percent of Contract Price, less accrued liquidated damages.

9.11.5 If Contractor fails to submit required items in Paragraph 9.11.4 within 10 days of Project Manager's inspection of the Work under Paragraph 9.11.2 or Paragraph 9.11.3, City Engineer may, but is not obligated to:

.1 deduct liquidated damages accrued from monies held;

.2 proceed to City Council for acceptance of the Work, minus some or all of the items Contractor fails to submit under Paragraph 9.11.4; and,

.3 upon acceptance by City Council of the portion of the Work completed, make final payment as set out in Paragraph 9.11.8.

9.11.6 If final completion is materially delayed through no fault of Contractor, or by issuance of Change Orders affecting date of final completion, and City Engineer so confirms, the City may, upon application by Contractor and certification by City Engineer, and without terminating the Contract, make payment of balance due for that portion of the Work fully completed and accepted.

9.11.7 If remaining balance due for work not corrected is less than retainage stipulated in the Contract, Contractor shall submit to City Engineer written consent of Surety to payment of balance due for that portion of the Work fully completed and accepted, prior to certification of the payment. The payment is made under terms governing final payment, except that it does not constitute waiver of Claims.

9.11.8 The City will make final payment to Contractor within 30 days after acceptance of the Work by City Council, subject to limitations, if any, as stated in the Contract.

9.11.9 Acceptance of final payment by Contractor shall constitute a waiver of all Claims, whether known or unknown, by Contractor, except those previously made in writing and identified by Contractor as unsettled at time of final Application for Payment.

9.12 *LIQUIDATED DAMAGES*

9.12.1 Contractor, Surety, and the City agree that failure to complete the Work within Contract Time will cause damages to the City and that actual damages from harm are difficult to estimate accurately. Therefore, Contractor, Surety, and the City agree that Contractor and Surety are liable for and shall pay to the City the amount stipulated in Supplementary Conditions as liquidated damages, and that the amount of damages fixed therein is a reasonable forecast of just compensation for harm to the City resulting from Contractor's failure to complete the Work within Contract Time. The amount stipulated will be paid for each day of delay beyond Contract Time until Date of Substantial Completion.

9.12.2 Contractor shall pay the City an amount equal to $1,200.00 per diesel operating vehicle or piece of motorized equipment per incident of high sulfur diesel fuel usage.

## ARTICLE 10 - SAFETY PRECAUTIONS

10.1 *SAFETY PROGRAMS*

10.1.1 Contractor is responsible for initiating, maintaining, and supervising all safety precautions and programs in connection with performance of the Contract. Contractor shall submit a safety program to City Engineer prior to mobilizing for the Work, and is solely responsible for safety, efficiency, and adequacy of ways, means, and methods, and for damage which might result from failure or improper construction, maintenance, or operation performed by Contractor.

10.2 *POLLUTANTS AND POLLUTANT FACILITIES*

10.2.1 If Contractor encounters material on-site which it reasonably believes to be a Pollutant or

facilities which it reasonably believes to be a Pollutant Facility, Contractor shall immediately stop work in affected area and immediately notify City Engineer, confirming the notice thereafter in writing.

10.2.2 If City Engineer determines that the material is a Pollutant or facility is a Pollutant Facility, work in affected area may not be resumed except by Modification, and only if the work would not violate applicable laws or regulations.

10.2.3 If City Engineer determines that the material is not a Pollutant or a facility is not a Pollutant Facility, work in affected area will be resumed upon issuance of a Modification.

10.2.4 Contractor is not required to perform, unless authorized by Change Order, work relating to Pollutants or Pollutant Facilities except for that work relating to Pollutants or Pollutant Facilities specified in the Contract.

10.3 *SAFETY OF THE ENVIRONMENT, PERSONS, AND PROPERTY*

10.3.1 Contractor shall take reasonable precautions for safety and shall provide reasonable protection to prevent damage, injury, or loss from all causes, to:

.1 employees performing work on-site, and other persons who may be affected thereby;

.2 work, including Products to be incorporated into the Work, whether in proper storage, under control of Contractor or Subcontractor; and

.3 other property at or adjacent to the site, such as trees, shrubs, lawns, walks, pavements, roadways, structures, utilities, and Underground Facilities not designated for removal or replacement in course of construction.

10.3.2 Contractor shall give notices and comply with applicable laws, ordinances, rules, regulations, and lawful orders of public authorities bearing on safety of persons, property, or environment.

10.3.2.1 Contractor shall comply with requirements of Underground Facility Damage Prevention and Safety Act TEX. UTIL. CODE ANN. Ch. 251 (Vernon Supp. 2002).

10.3.2.2 Contractor shall comply with all safety rules and regulations of the Federal Occupational Health and Safety Act of 1970 and subsequent amendments (OSHA).

10.3.3 Contractor shall erect and maintain, as required by existing conditions and performance of the Contract, reasonable safeguards for safety and protection of persons and property, including posting danger signs and other warnings against hazards, promulgating safety regulations, and notifying owners and users of adjacent sites and utilities.

10.3.4 Contractor shall designate responsible member of Contractor's organization at site whose duty is prevention of accidents. This person will be Contractor's Superintendent unless otherwise designated by Contractor in writing to City Engineer.

10.3.5 Contractor shall prevent windblown dust and may not burn or bury trash debris or waste products on-site. Contractor shall prevent environmental pollution, including but not limited to particulates, gases and noise, as a result of the Work.

10.3.6 When use or storage of hazardous materials or equipment, or unusual methods are necessary for execution of the Work, Contractor shall exercise utmost care and carry on the activities under supervision of properly qualified personnel.

10.3.7 Contractor shall promptly remedy damage and loss to property referred to in Subparagraphs 10.3.1.2 and 10.3.1.3, caused in whole or in part by Contractor, or Subcontractors, which is not covered by insurance required by the Contract. Contractor is not required to remedy damage or loss attributable to the City, Design Consultant, or other contractors.

10.4 *EMERGENCIES*

10.4.1 In emergencies affecting safety of persons or property, Contractor shall act at Contractor's discretion to prevent imminent damage, injury, or loss. Additional compensation or extension of time claimed by Contractor because of emergencies are determined as provided in Article 7.

## ARTICLE 11 - INSURANCE AND BONDS

11.1 *GENERAL INSURANCE REQUIREMENTS*

11.1.1 With no intent to limit Contractor's liability under indemnification provisions set forth in Paragraphs 3.25 and 3.26, Contractor shall provide and maintain in full force and effect during term of the Contract and all extensions and amendments

thereto, at least the following insurance and available limits of liability.

11.1.2 If any of the following insurance is written as "claims made" coverage and the City is required to be carried as additional insured, then Contractor's insurance shall include a two-year extended discovery period after last date that Contractor provides any work under the Contract.

11.1.3 Aggregate amounts of coverage, for purposes of the Contract, are agreed to be amounts of coverage available during fixed 12-month policy period.

11.2 *INSURANCE TO BE PROVIDED BY CONTRACTOR*

11.2.1 *Risks and Limits of Liability:* Contractor shall provide at a minimum insurance coverage and limits of liability set out in Table 1.

11.2.1.1 If Limit of Liability for Excess Coverage is $2,000,000 or more, Limit of Liability for Employer's Liability may be reduced to $500,000.

11.2.2 *Form of Policies:* Insurance may be in one or more policies of insurance, form of which is subject to approval by City Engineer. It is agreed, however, that nothing City Engineer does or fails to do with regard to insurance policies relieves Contractor from its duties to provide required coverage and City Engineer's actions or inactions will never be construed as waiving the City's rights.

11.2.3 *Issuers of Policies:* Issuer of any policy shall have:

.1 a Certificate of Authority to transact business in Texas, or

.2 have a Best's rating of at least B+ and a Best's Financial Size Category of Class VI or better, according to the most current edition of Best's Key Rating Guide, and the issuer must be an eligible nonadmitted insurer in the State of Texas.

Each insurer is subject to approval by City Engineer in City Engineer's sole discretion as to conformance with these requirements, pursuant to Paragraph 11.2.2.

11.2.4 *Insured Parties:* The City shall be an Additional Insured under this Contract. Each policy, except those for Workers' Compensation and Owner's and Contractor's Protective Liability, must name the City, its officers, agents, and employees as Additional Insured parties on original policy and all renewals or replacements during term of the Contract. The City's status as Additional Insured under Contractor's insurance does not extend to instances of sole negligence of the City unmixed with any fault of Contractor.

11.2.5 *Deductibles:* Contractor assumes and bears any claims or losses to extent of deductible amounts and waives any claim it may ever have for same against the City, its officers, agents, or employees.

11.2.6 *Cancellation:* Contractor shall notify the Director in writing 30 days prior to any cancellation or material change to Contractor's insurance coverage. Within the 30 day period, Contractor shall provide other suitable policies in lieu of those about to be canceled or nonrenewed so as to maintain in effect the required coverage. If Contractor does not comply with this requirement, the City Engineer, at his or her sole discretion, may:

.1 immediately suspend Contractor from any further performance under this Contract and begin procedures to terminate for default, or

.2 purchase the required insurance with City funds and deduct the cost of the premiums from amounts due to Contractor under this Contract.

11.2.7 *Subrogation:* Contractor waives any claim or right of subrogation to recover against the City, its officers, agents, or employees. Each policy, except professional liability, must contain an endorsement waiving such claim.

11.2.8 *Endorsement of Primary Insurance:* Each policy, except Workers' Compensation policies, must contain an endorsement that the policy is primary insurance to any other insurance available to additional insured with respect to claims arising hereunder.

11.2.9 *Liability for Premium:* Contractor is solely responsible for payment of all insurance premium requirements hereunder and the City is not obligated to pay any premiums.

11.2.10 *Additional Requirements for Workers' Compensation Insurance Coverage:* Contractor shall, in addition to meeting the obligations set forth in Table 1, maintain throughout the term of the Contract Workers' Compensation coverage as required by statute, and Contractor shall specifically comply with requirements set forth in Paragraph 11.2.10. The definitions set out below shall apply only for purposes of this Paragraph 11.2.10.

11.2.10.1 Definitions:

.1 *Certificate of Coverage:* A copy of certificate of insurance, or coverage agreement (TWCC-81, TWCC-82, TWCC-83, or TWCC-84), showing statutory Workers' Compensation insurance coverage for Contractor's, Subcontractor's, or Supplier's employees providing services for the duration of the Contract.

.2 *Duration of the Work:* Includes the time from Date of Commencement of the Work until Contractor's work under the Contract has been completed and accepted by City Council.

.3 *Persons providing services for the Work (Subcontractor in Texas Labor Code § 406.096):* includes all persons or entities performing all or part of services Contractor has undertaken to perform on the Work, regardless of whether that person contracted directly with Contractor and regardless of whether that person has employees. This includes, without limitation, independent contractors, subcontractors, leasing companies, motor carriers, owner-operators, employees of the entity, or employees of entity which furnishes persons to provide services on the Work. Services include, without limitation, providing, hauling, or delivering equipment or materials, or providing labor, transportation, or other service related to the Work. Services do not include activities unrelated to the Work, such as food/beverage vendors, office supply deliveries, and delivery of portable toilets.

11.2.10.2 Contractor shall provide coverage, based on proper reporting of classification codes and payroll amounts and filing of coverage agreements, which meets the statutory requirements of TEX. LAB. CODE ANN., Section 401.011(44) for employees of Contractor providing services on the Work, for duration of the Work.

11.2.10.3 Contractor shall provide a Certificate of Coverage to the City prior to being awarded the Contract.

11.2.10.4 If coverage period shown on Contractor's original Certificate of Coverage ends during duration of the Work, Contractor shall file new Certificate of Coverage with the City showing that coverage has been extended.

11.2.10.5 Contractor shall obtain from each person providing services on the Work, and provide to City Engineer:

.1 Certificate of Coverage, prior to that person beginning work on the Work, so the City will have on file Certificates of Coverage showing coverage for all persons providing services on the Work; and

.2 no later than seven days after receipt by Contractor, new Certificate of Coverage showing extension of coverage, if coverage period shown on current Certificate of Coverage ends during the duration of the Work.

11.2.10.6 Contractor shall retain all required Certificates of Coverage for the duration of the Work and for one year thereafter.

11.2.10.7 Contractor shall notify City Engineer in writing by certified mail or personal delivery, within 10 days after Contractor knew or should have known, of any change that materially affects provision of coverage of any person providing services on the Work.

11.2.10.8 Contractor shall post on-site a notice, in text, form and manner prescribed by Texas Workers' Compensation Commission, informing all persons providing services on the Work that they are required to be covered, and stating how person may verify coverage and report lack of coverage.

11.2.10.9 Contractor shall contractually require each person with whom it contracts to provide services on the Work to:

.1 provide coverage, based on proper reporting of classification codes, payroll amounts and filing of any coverage agreements, which meets statutory requirements of TEX. LAB. CODE ANN., Section 401.011(44) for all its employees providing services on the Work, for the duration of the Work;

.2 provide to Contractor, prior to that person's beginning work on the Work, a Certificate of Coverage showing that coverage is being provided for all employees of the person providing services on the Work, for the duration of the Work;

.3 provide Contractor, prior to the end of the coverage period, a new Certificate of Coverage showing extension of coverage, if the coverage period shown on the current Certificate of Coverage ends during the duration of the Work;

.4 obtain from each other person with whom it contracts, and provide to Contractor: (1) Certificate of Coverage, prior to other person's beginning work on the Work; and (2) new Certificate of Coverage showing extension of coverage, prior to end of coverage period, if coverage period shown on the current Certificate of Coverage ends during duration of the Work.

.5 retain all required Certificates of Coverage on file for the duration of the Work and for one year thereafter;

.6 notify City Engineer in writing by certified mail or personal delivery within 10 days after person knew, or should have known, of change that materially affects provision of coverage of any person providing services on the Work; and

.7 contractually require each person with whom it contracts to perform as required by Paragraphs 11.2.10.1 through 11.2.10.7, with Certificates of Coverage to be provided to person for whom they are providing services.

11.2.10.10 By signing the Contract or providing or causing to be provided a Certificate of Coverage, Contractor is representing to the City that all employees of Contractor who will provide services on the Work will be covered by Workers' Compensation coverage for the duration of the Work, that coverage will be based on proper reporting of classification codes and payroll amounts, and that all coverage agreements will be filed with appropriate insurance carrier. Contractor is not allowed to self-insure Workers' Compensation. Contractor may be subject to administrative penalties, criminal penalties, civil penalties, or other civil actions for providing false or misleading information.

11.2.10.11 Contractor's failure to comply with Paragraph 11.2.10 is a breach of the Contract by Contractor, which entitles the City to declare the Contract void if Contractor does not remedy breach within 10 days after receipt of notice of breach from City Engineer.

11.2.11 *Subcontractor Insurance Requirements:* Contractor shall require Subcontractors and Suppliers to obtain Commercial General Liability, Workers' Compensation, Employer's Liability and Automobile Liability coverage that meets all the requirements of Paragraph 11.2. The amount must be commensurate with the amount of the subcontract, but not less than $500,000 per occurrence. Contractor shall require all Subcontractors with whom it contracts directly, whose subcontracts exceed $100,000, to provide proof of Commercial General Liability and Automobile Liability insurance coverage meeting the above requirements. Contractor shall comply with all requirements set out under Paragraph 11.2.10 as to Workers' Compensation Insurance for all Subcontractors and Suppliers.

TABLE 1
REQUIRED COVERAGE

| (Coverage) | (Limit of Liability) |
|---|---|
| .1 Workers' Compensation | Statutory Limits for Workers' Compensation |
| .2 Employer's Liability | Bodily Injury by Accident $1,000,000 (each accident)<br>Bodily Injury by Disease $1,000,000 (policy limit)<br>Bodily Injury by Disease $1,000,000 (each employee) |
| .3 Commercial General Liability:<br>Including Contractor's Protective, Broad Form Property Damage, Contractual Liability, Explosion, Underground and Collapse, Bodily Injury, Personal Injury, Products, and Completed Operations (for a period of one year following completion of the Work). | Combined single limit of $1,000,000 (each occurrence), subject to general aggregate of $1,000,000;<br>Products and Completed Operations $1,000,000 aggregate. |
| .4 Owner's and Contractor's Protective Liability | $1,000,000 combined single limit each Occurrence/ aggregate |
| .5 Installation Floater (Unless alternative coverage approved by City Attorney) | Value of stored material or equipment, listed on Certificates of Payments, but not yet incorporated into the Work |
| .6 Automobile Liability Insurance:<br>(For automobiles furnished by Contractor in course of his performance under the Contract, including Owned, Non-owned, and Hired Auto coverage) | $2,000,000 combined single limit each occurrence for (1) Any Auto or (2) All Owned, Hired, and Non-Owned Autos |
| .7 Excess Coverage | $1,000,000 each occurrence/combined aggregate in excess of limits specified for Employer's Liability, Commercial General Liability, and Automobile Liability |
| Aggregate Limits are per 12-month policy period unless otherwise indicated. | |

11.3 *PROOF OF INSURANCE*

11.3.1 Prior to commencing services and at time during the term of the Contract, Contractor shall furnish City Engineer with Certificates of Insurance, along with Affidavit from Contractor confirming that Certificate accurately reflects insurance coverage that is available during term of the Contract. If requested in writing by City Engineer, Contractor shall furnish City Engineer with certified copies of Contractor's actual insurance policies. Failure of Contractor to provide certified copies, as requested, may be deemed, at City Engineer's or City Attorney's discretion, a material breach of the Contract.

11.3.2 Notwithstanding the proof of insurance requirements, Contractor shall continuously maintain in effect required insurance coverage set forth in Paragraph 11.2. Failure of Contractor to comply with this requirement does constitute a material breach by Contractor allowing the City, at its option, to immediately suspend or terminate work, or exercise any other remedy allowed under the Contract. Contractor agrees that the City has not waived or is not estopped to assert a material breach of the Contract because of any acts or omissions by the City regarding its review or non-review of insurance documents provided by Contractor, its agents, employees, or assigns.

11.3.3 Contractor shall provide updated certificates of insurance to the Director upon request. The Contractor shall be responsible for delivering a current certificate of insurance in the proper form to the Director as long as Contractor is required to furnish insurance coverage under Paragraph 11.2.

11.3.4 Every certificate of insurance Contractor delivers in connection with this Contract shall

.1 be less than 12 months old;

.2 include all pertinent identification information for the Insurer, including the company name and address, policy

number, NAIC number or AMB number, and authorized signature;

.3 include in the Certificate Holder Box the Project name and reference numbers, contractor's email address, and indicates the name and address of the Project Manager;

.4 include the Contractor's email address in the Certificate Holder Box;

.5 include the Project reference numbers on the City address so the Project reference number is visible in the envelope window; and

.6 be appropriately marked to accurately identify all coverages and limits of the policy, effective and expiration dates, and waivers of subrogation in favor of the City for Commercial General Liability, Automobile Liability, and Worker's Compensation/Employers' Liability.

11.4 *PERFORMANCE AND PAYMENT BONDS*

11.4.1 For Contracts over the value of $25,000, Contractor shall provide Bonds on the City's standard forms covering faithful performance of the Contract and payment of obligations arising thereunder as required in the Contract pursuant to Chapter 2253 of the Government Code. The Bonds must be for 100 percent of Original Contract Price and in accordance with conditions stated on standard City Performance and Payment Bond and Statutory Payment Bond forms. Bonds may be obtained from Contractor's usual source and cost for the Bonds are included in Contract Price.

11.5 *MAINTENANCE BONDS*

11.5.1 *One-year Maintenance Bond:* Contractor shall provide Bond on standard City One-year Maintenance Bond form, providing for Contractor's correction, replacement, or restoration of any portion of the Work which is found to be not in compliance with requirements of the Contract during one-year correction period required in Paragraph 12.2. The Maintenance Bond must be for 100 percent of the Original Contract Price.

11.6 *SURETY*

11.6.1 A Bond that is given or tendered to the City pursuant to the Contract must be executed by a surety company that is authorized and admitted to write surety Bonds in the State of Texas.

11.6.2 If a Bond is given or tendered to the City pursuant to the Contract in an amount greater than 10 percent of Surety's capital and surplus, Surety shall provide certification that Surety has reinsured that portion of the risk that exceeds 10 percent of Surety's capital and surplus. The reinsurance must be with one or more reinsurers who are duly authorized, accredited, or trusted to do business in the State of Texas. The amount reinsured by reinsurer may not exceed 10 percent of reinsurer's capital and surplus. The amount of allowed capital and surplus must be based on information received from State Board of Insurance.

11.6.3 If the amount of a Bond is greater than $100,000, Surety shall:

.1 also hold certificate of authority from the United States Secretary of Treasury to qualify as surety on obligations permitted or required under federal law; or,

.2 Surety may obtain reinsurance for any liability in excess of $100,000 from reinsurer that is authorized and admitted as a reinsurer in the State of Texas and is the holder of a certificate of authority from the United States Secretary of the Treasury to qualify as surety or reinsurer on obligations permitted or required under federal law.

11.6.4 Determination of whether Surety on the Bond or the reinsurer holds a certificate of authority from the United States Secretary of the Treasury is based on information published in Federal Register covering the date on which Bond was executed.

11.6.5 Each Bond given or tendered to the City pursuant to the Contract must be on City forms with no changes made by Contractor or Surety, and must be dated, executed, and accompanied by power of attorney stating that the attorney in fact executing such the bond has requisite authority to execute such Bond. The Bonds must be dated and must be no more than 30 days old.

11.6.6 Surety shall designate in its Bond, power of attorney, or written notice to the City, an agent resident in Harris County to whom any requisite notices may be delivered and on whom service of process may be had in matters arising out of the suretyship.

11.6.7 Contractor shall furnish information to a payment bond beneficiary as required by TEX. GOV'T CODE ANN. CH. 2253.

11.7 *DELIVERY OF BONDS*

11.7.1 Contractor shall deliver required Bonds to the City within time limits stated in Notice of Intent to Award and prior to Date of Commencement of the Work.

## ARTICLE 12 - UNCOVERING AND CORRECTION OF THE WORK

12.1 *UNCOVERING OF THE WORK*

12.1.1 If a portion of the Work has been covered which City Engineer has not specifically requested to observe prior to its being covered, City Engineer may request to see such work and it must be uncovered by Contractor. If such work is in accordance with the Contract, the costs of uncovering and covering such work are charged to the City by Change Order. If such work is not in accordance with the Contract, Contractor shall pay for uncovering and shall correct the nonconforming Work promptly after receipt of Notice of Noncompliance to do so.

12.2 *CORRECTION OF THE WORK*

12.2.1 Contractor shall promptly correct or remove work rejected by City Engineer or work failing to conform to requirements of the Contract, whether observed before or after Date of Substantial Completion and whether fabricated, Installed, or completed.

12.2.2 Contractor bears costs of correcting the rejected or nonconforming work including additional testing and inspections, and compensation for Design Consultant's services and expenses made necessary thereby.

12.2.3 If within one year after Date of Substantial Completion, or after date for commencement of warranties established under Paragraph 9.9.5 or by other applicable special warranty required by the Contract, whichever is later in time, any of the Work is found not to be in accordance with the requirements of the Contract, Contractor shall correct such work promptly after receipt of Notice of Noncompliance to do so.

12.2.4 One-year correction period for portions of the Work completed after Date of Substantial Completion will begin on the date of acceptance of that portion of the Work. This obligation under this Paragraph survives acceptance of the Work under the Contract and termination of the Contract.

12.2.5 The one-year correction period does not establish a duration for the Contractor's general warranty under Paragraph 3.12. The City retains the right to recover damages from the Contractor as long as may be permitted by the applicable statute of limitations.

12.2.6 If Contractor does not proceed with correction of the nonconforming work within time fixed by Notice of Noncompliance, the City may correct nonconforming work or remove nonconforming work and store salvageable Products at Contractor's expense. Contractor shall pay the costs of correction of nonconforming work and removal and storage of salvageable Products to the City. If Contractor does not pay costs of the correction or removal and storage within 10 days after written notice, the City may sell the Products at auction or at private sale. The City will account for proceeds thereof after deducting costs and damages that would have been borne by Contractor, including compensation for services of Design Consultant and necessary expenses. If the proceeds of sale do not cover costs which Contractor should have borne, Contractor shall pay the value of the deficiency to the City.

12.2.7 Contractor bears cost of correcting work originally installed by Contractor, the City, or by separate contractors and damaged by Contractor's correction or removal of Contractor's work.

12.3 *ACCEPTANCE OF NONCONFORMING WORK*

12.3.1 If City Engineer prefers to accept work which is not in accordance with requirements of the Contract, City Engineer may do so only by issuance of Change Order, instead of requiring its removal and correction. City Engineer will determine Contract Price reduction. The reduction will become effective even if final payment has been made.

## ARTICLE 13 - MISCELLANEOUS PROVISIONS

13.1 *GOVERNING LAWS*

13.1.1 The Contract is subject to the laws of the State of Texas, the City Charter and Ordinances, the laws of the federal government of the United States, and all rules and regulations of any regulatory body or officer having jurisdiction.

13.1.2 Venue for any litigation relating to the Contract is Harris County, Texas.

13.2 *SUCCESSORS*

13.2.1 The Contract binds and benefits the Parties and their legal successors and permitted assigns; however, this Paragraph 13.2.1 does not alter the restrictions on assignment and disposal of assets set out in Paragraph 13.3.1. The Contract does not create any personal liability on the part of any officer or agent of the City.

13.3 *BUSINESS STRUCTURE AND ASSIGNMENTS*

13.3.1 Contractor may not assign the Contract at law or otherwise, or dispose of all or substantially all of its assets without City Engineer's prior written consent. Nothing in this Section, however, prevents the assignment of accounts receivable or the creation of a security interest as described in §9.406 of the Texas Business & Commerce Code. In the case of such an assignment, Contractor shall immediately furnish the City with proof of the assignment and the name, telephone number, and address of the assignee and a clear identification of the fees to be paid to the assignee.

13.3.2 Any series, as defined by the TEX. BUS. ORG. CODE ANN., affiliate, subsidiary, or successor to which Contractor assigns or transfers assets shall join in privity and be jointly and severally liable under this Contract.

13.4 *WRITTEN NOTICE*

13.4.1 All notices required or permitted by the Contract must be in writing and must be effected by hand delivery; registered or certified mail, return receipt requested; or facsimile with confirmation copy mailed to receiving Party. Notice is sufficient if made or addressed with proper postage to the address stated in the Agreement for each Party ("Notice Address") or faxed to the facsimile number stated in the Agreement for each Party. The notice is deemed delivered on the earlier of:

.1 the date the Notice is actually received;
.2 the third day following deposit in a United States Postal Service post office or receptacle; or
.3 the date the facsimile is sent unless the facsimile is sent after 5:00 p.m. local time of the recipient and then it is deemed received on the following day.

Any Party may change its Notice Address or facsimile number at any time by giving written notice of the change to the other Party in the manner provided for in this Paragraph at least 15 days prior to the date the change is affected.

13.5 *RIGHTS AND REMEDIES*

13.5.1 Duties and obligations imposed by the Contract and rights and remedies available thereunder are in addition to and not a limitation of duties, obligations, rights, and remedies otherwise imposed or available by law.

13.5.2 No act or failure to act by the City or Contractor is a waiver of rights or duties afforded them under the Contract, nor is the act or failure to act constitute approval of or acquiescence in a breach of the Contract. No waiver, approval or acquiescence is binding unless in writing and, in the case of the City, signed by City Engineer.

13.6 *TESTS AND INSPECTIONS*

13.6.1 Contractor shall give City Engineer, Construction Manager, and Design Consultant timely notice of the time and place where tests and inspections are to be made. Contractor shall cooperate with inspection and testing personnel to facilitate required inspections or tests.

13.6.2 The City will employ and pay for services of an independent testing laboratory to perform inspections or acceptance tests required by the Contract except:

.1 inspections or tests covered by Paragraph 13.6.3;
.2 those otherwise specifically provided in the Contract; or
.3 costs incurred in connection with tests or inspections conducted pursuant to Paragraph 12.2.2.

13.6.3 Contractor is responsible for and shall pay all costs in connection with inspection or testing required in connection with City Engineer's acceptance of a Product to be incorporated into the Work, or of materials, mix designs, or equipment submitted for approval prior to Contractor's purchase thereof for incorporation into the Work.

13.6.4 Neither observations by the City, Construction Manager, or Design Consultant, nor inspections, tests, or approvals by others, relieves Contractor from Contractor's obligations to perform the Work in accordance with the Contract.

13.7 *INTEREST*

13.7.1 No interest will accrue on late payments by the City except as provided under Chapter 2251 of the Government Code.

13.8 *PARTIES IN INTEREST*

13.8.1 The Contract does not bestow any rights upon any third party, but binds and benefits the Parties only.

13.9 *ENTIRE CONTRACT*

13.9.1 The Contract merges the prior negotiations and understandings of the Parties and embodies the entire agreement of the Parties. No other agreements, assurances, conditions, covenants, express or implied, or other terms of any kind, exist between the Parties regarding the Contract.

13.10 *WRITTEN AMENDMENT*

13.10.1 Changes to the Contract that cannot be effected by Modifications, must be made by written amendment, which will not be effective until approved by City Council.

13.11 *COMPLIANCE WITH LAWS*

13.11.1 Contractor shall comply with the Americans with Disabilities Act of 1990 as amended (ADA) and Texas Architectural Barriers Act and all regulations relating to either statute.

13.11.2 Contractor shall comply with all applicable federal, state, and city laws, rules and regulations.

13.12 *SEVERABILITY*

13.12.1 If any part of the Contract is for any reason found to be unenforceable, all other parts remain enforceable to the extent permitted by law.

## ARTICLE 14 - TERMINATION OR SUSPENSION OF THE CONTRACT

14.1 *TERMINATION BY THE CITY FOR CAUSE*

14.1.1 Each of the following acts or omissions of Contractor or occurrences shall constitute an "Event of Default" under the Contract:

.1 Contractor refuses or fails to supply enough properly skilled workers or proper Products;

.2 Contractor disregards laws, ordinances, rules, regulations, or orders of a public authority having jurisdiction;

.3 Contractor is guilty of material breach of any duty or obligation of Contractor under the Contract;

.4 Contractor has had any other contract with the City terminated for cause at any time subsequent to the effective date of the Contract as set out in the Agreement; or

.5 Contractor fails to utilize Ultra Low Sulfur Diesel Fuel, as required in Paragraph 3.9.1.1.

14.1.2 If an Event of Default occurs, City Engineer may, at his option and without prejudice to any other rights or remedies which the City may have, deliver a written notice to Contractor and Surety describing the Event of Default and giving the Contractor 10 days to cure the Event of Default. If after the cure period, Contractor has failed or refused to cure the Event of Default, then City Engineer may deliver a second written notice to Contractor giving notice of the termination of the Contract or of the termination of Contractor's performance under the Contract ("Notice of Termination"). If City Engineer issues a Notice of Termination, then City Engineer may, subject to any prior rights of Surety and any other rights of the City under the Contract or at law:

.1 request that Surety complete the Work; or

.2 take possession of the site and all materials, equipment, tools, and construction equipment and machinery on the site owned by Contractor; and

.3 finish the Work by whatever reasonable method City Engineer may deem expedient.

14.1.3 After Contractor's receipt of a Notice of Termination, and except as otherwise directed in writing by City Engineer, Contractor shall:

.1 stop the Work on the date and to the extent specified in the Notice of Termination;

.2 place no further orders or subcontracts for Products or services;

.3 terminate all orders and subcontracts to the extent that they relate to performance of work terminated;

.4 assign to the City, in the manner, at the times, and to the extent directed by City Engineer, all rights, title, and interest of Contractor, under the terminated supply orders and subcontracts. The City may settle or pay claims arising out of termination of the orders and subcontracts;

.5 settle all outstanding liabilities and all claims arising out of the termination of supply orders and subcontracts with approval of City Engineer;

.6 take action as may be necessary, or as City Engineer may direct, for protection and preservation of property related to the Work that is in possession of Contractor, and in which the City has or may acquire an interest; and

.7 secure the Work in a safe state before leaving the site, providing any necessary safety measures, shoring, or other devices.

14.1.4 If the City terminates the Contract or terminates Contractor's performance under the Contract for any one or more of the reasons stated in Paragraph 14.1.1, Contractor may not receive any further payment until the Work is complete, subject to Paragraph 14.1.5.

14.1.5 If the unpaid balance of Contract Price exceeds the costs of finishing the Work, including liquidated damages and other amounts due under the Contract, the balance will be paid to Contractor. If the costs of finishing the Work exceed the unpaid balance, Contractor shall, within 10 days of receipt of written notice setting out the amount of the excess costs, pay the difference to the City. The amount to be paid to Contractor or the City will be certified by City Engineer in writing, and this obligation for payment shall survive termination of the Contract or termination of Contractor's performance under the Contract. Termination of the Contractor for cause shall not relieve the Surety from its obligation to complete the project.

14.2 *TERMINATION BY THE CITY FOR CONVENIENCE*

14.2.1 City Engineer may, without cause and without prejudice to other rights or remedies of the City, give Contractor and Surety a Notice of Termination with a seven days written notice.

14.2.2 After receipt of the Notice of Termination, and except as otherwise approved by City Engineer, Contractor shall conform to requirements of Paragraph 14.1.3.

14.2.3 After receipt of the Notice of Termination, Contractor shall submit to the City its termination Claim, in forms required by City Engineer. The Claim will be submitted to the City promptly, but no later than six months from the effective date of termination, unless one or more extensions are granted by City Engineer in writing. If Contractor fails to submit its termination Claim within the time allowed, in accordance with Paragraph 14.2.4, City Engineer will determine, on the basis of available information, the amount, if any, due to Contractor because of termination, and City Engineer's determination is final and binding on the Parties. The City will then pay to Contractor the amount so determined.

14.2.4 City Engineer will determine, on the basis of information available to City Engineer, the amount due, if any, to Contractor for the termination as follows:

.1 Contract Price for all work performed in accordance with the Contract up to the date of termination determined in the manner prescribed for monthly payments in Article 9, except no retainage is withheld by the City either for payment determined by percentage of completion or for materials and equipment delivered to the site, in storage or in transit.

.2 Reasonable termination expenses, including costs for settling and paying Subcontractor and Supplier claims arising out of termination of the Work, reasonable cost of preservation and protection of the City's property after termination, if required, and the cost of Claim preparation. Termination expenses do not include field or central office overhead, salaries of employees of Contractor, or litigation costs, including attorneys' fees.

No amount is allowed for anticipated profit or central office overhead on uncompleted work, or any cost or lost profit for other business of Contractor alleged to be damaged by the termination.

14.2.5 Contractor shall promptly remove from the site any construction equipment, tools, and temporary facilities, except the temporary facilities which City Engineer may wish to purchase and retain.

14.2.6 Contractor shall cooperate with City Engineer during the transition period.

14.2.7 The City will take possession of the Work and materials delivered to the site, in storage, or in transit, as of date or dates specified in the Notice of Termination, and is responsible for maintenance, utilities, security, and insurance, as stated in Notice of Termination.

14.3 *SUSPENSION BY THE CITY FOR CONVENIENCE*

14.3.1 City Engineer may, without cause, after giving Contractor and Surety 24-hour prior written

notice, order Contractor to suspend, delay, or interrupt the Work in whole or in part for a period of time as City Engineer may determine.

14.3.2 An adjustment will be made in Contract Time equivalent to the time of suspension.

14.3.3 Adjustment will be made to Contract Price for increases in the cost of performance of the Work, including profit on increased cost of performance caused by suspension, delay, or interruption of the Work in accordance with Paragraph 7.3. No adjustment will be made to the extent that:

.1 performance was, or would have been, suspended, delayed, or interrupted by another cause for which Contractor is responsible; or

.2 adjustment is made or denied under another provision of the Contract.

14.4 *TERMINATION BY CONTRACTOR*

14.4.1 Contractor may terminate the Contract if the Work is stopped for a period of 30 days through no act or fault of Contractor, directly related to one of these events:

.1 issuance of an order of a court or other public authority having jurisdiction;

.2 act of government, such as a declaration of national emergency which makes material unavailable; or

.3 if repeated suspensions, delays, or interruptions by the City as described in Paragraph 14.3 constitute, in the aggregate, more than 100 percent of the total number of days scheduled for completion, or 120 days in any 365-day period, whichever is less;

No termination will be effective for the above reasons if Contractor delivers written notice to City Engineer describing the reason for termination, giving the proposed termination date, and granting the City a reasonable opportunity to respond and cure any City default before termination is effective.

14.4.2 If the Contract is terminated pursuant to this Paragraph 14.4, Contractor shall comply with the requirements of Paragraphs 14.2.2 through 14.2.7.

END OF DOCUMENT

Document 00800

SUPPLEMENTARY CONDITIONS

*Project Manager: Stephen M. Campagna*
*Project No.: WBS WBS No. N-000784-0001-4*

The following Paragraphs amend and supplement the November 1, 2014 edition of General Conditions. Unaltered portions of General Conditions remain in effect.

ARTICLE 1 - GENERAL PROVISIONS:

1.1 *DEFINITIONS: Insert the following Paragraph 1.1.23, and reorder the remaining definitions accordingly.*

1.1.23 *Good Faith Efforts*. Steps taken to achieve an MBE, WBE, SBE, or PDBE goal or other requirements which, by their scope, intensity, and usefulness, demonstrate the bidder's responsiveness to fulfill the business opportunity objective, as well as the Contractor's responsibility to put forth measures to meet or exceed the MBE, WBE, SBE, or PDBE goal (Contract Goal). These steps apply from before a contract's award, through its duration, and after its conclusion, in the event the Contractor has been unsuccessful in meeting the Contract Goal. These efforts are required whether a Goal Oriented Contract or a Regulated Contract, as defined in the Office of Business Opportunity's Policy & Procedures Manual, available at http://www.houstontx.gov/obo.

ARTICLE 3 - THE CONTRACTOR

3.5 *LABOR: Insert the following Paragraphs, 3.5.3.1.1, 3.5.3.1.2 and3.5.3.1.3.*

3.5.3.1.1 If the Original Contract Price is greater than One Million Dollars, Contractor shall make Good Faith Efforts to comply with the City ordinances regarding Minority Business Enterprises (MBE), Women Business Enterprises (WBE), Persons with Disabilities Business Enterprises (PDBE) and Small Business Enterprise (SBE) participation goals which are as follows:

.1 the MBE goal is 11% percent,

.2 the WBE goal is 7% percent, and

.3 the PDBE goal is 0% percent.

.4 The bidder may substitute SBE participation of no more than four percent of the MBE goal, the WBE goal, or portions of the MBE Goal and WBE Goal.

3.5.3.1.2 The MBE, WBE, PDBE, and SBE goals are specific to this Agreement. The Contractor shall make reasonable efforts to achieve these goals.

3.5.3.1.3 Failure by Contractor to comply with the goals for MBE, WBE, SBE, or PDBE is a material breach of the Agreement, which may result in termination of the Agreement, or such other remedy permitted as the City deems appropriate.

ARTICLE 8 - TIME

8.1 *PROGRESS AND COMPLETION: Add the following Paragraph 8.1.6.1.*

8.1.6.1 Contractor shall credit the City by Change Order for inspection services for overtime work or work performed on Sundays or Legal Holidays. The amount Contractor credits the City will be [$50.00 per hour] per inspector for inspection services.

ARTICLE 9 - PAYMENTS AND COMPLETION

9.12 *LIQUIDATED DAMAGES: Insert the following Paragraph 9.12.1.1.*

9.12.1.1 The amount of liquidated damages payable by Contractor or Surety for each and every day of delay beyond Contract Time, are $1,500.00 per day.

ARTICLE 11 - INSURANCE AND BONDS

11.2 INSURANCE TO BE PROVIDED BY CONTRACTOR: Insert the following Paragraph 11.2.1.2.

11.2.1.2 Contractor shall purchase for the duration of the Contract the insurance set out in Table 2 in addition to the minimum insurance coverage set out in section 11.2.1.

TABLE 2
ADDITIONAL REQUIRED COVERAGE
DEFENSE COSTS EXCLUDED FROM FACE AMOUNT OF POLICY.

| | |
|---|---|
| Contractor's Pollution Liability: Including pollution coverage for Contractual Liability, Clean-up costs, Abatement, Transport, and Non-owned disposal sites. Including Bodily Injury Liability, Property Damage Liability, and environmental damage arising from pollution conditions caused in performance of operations. Including Asbestos and Lead if part of operations. | $1,000,000 each occurrence |

| | |
|---|---|
| (MCS - 90 endorsement: to Auto Policy and removal of Pollution Exclusion) | $1,000,000 CSL |

11.5 *MAINTENANCE BONDS: Insert the following Paragraph 11.5.2.*

11.5.2 One-year Surface Correction Bond: Contractor shall provide, on the City standard form, an additional One-Year Bond in an amount equal to four percent of the Original Contract Price or cost of repair. Bond shall provide for Contractor's correction, replacement, or restoration of backfill or subsurface and surface work not in accordance with the Contract, within one year from the date the One-Year Maintenance Bond has expired.

END OF DOCUMENT

Document 00805

# EQUAL EMPLOYMENT OPPORTUNITY PROGRAM REQUIREMENTS
(City of Houston Information Requirements
for the Successful Bidder on All Construction Contracts)

## DOCUMENTS THAT MUST BE SIGNED AND RETURNED TO THE CITY OF HOUSTON PRIOR TO FINAL EXECUTION OF CONTRACT

Certification by Bidder Regarding Equal Employment Opportunity ..... EEO-3

Total Work Force Composition of the Company,..... EEO-6
*or in lieu thereof, a copy of the latest Equal Employment Opportunity Commission's EEO-1 form (This information is required only if the Contractor has a work force of 50 or more people and the Contract is $50,000 or more.)*

Company's Equal Employment Opportunity Compliance Program ..... EEO-7

## INFORMATION THAT MUST BE SUPPLIED DURING THE COURSE OF THE WORK

Certification By Proposed Subcontractor Regarding
Equal Employment Opportunity ..... EEO-26

Certification by Proposed Material Suppliers, Lessors,and
Professional Service Providers Regarding Equal Employment Opportunity..... EEO-29

PLEASE COMPLETE PAGES EEO-3 THROUGH EEO-7 AND MAIL TO:

City of Houston
Mayor's Office of Business Opportunity
Contract Compliance Section
611 Walker, 7th Floor
Houston, Texas 77002
Attention: Director

The remainder of the reports can be mailed at the appropriate time.

# EQUAL EMPLOYMENT OPPORTUNITY PROGRAM REQUIREMENTS

The following are Equal Employment Opportunity requirements to be met and documents to be submitted to:

Mayor's Office of Business Opportunity
Contract Compliance Section
611 Walker, 7th Floor
Houston, Texas 77002

Under the conditions and terms of all City construction contracts, the prime contractor is responsible for all Equal Employment Opportunity compliance, including subcontractor compliance.

## EQUAL EMPLOYMENT OPPORTUNITY FORMS (EEO Forms)

These forms are submitted by the prime contractors at the beginning of the Project and as requested:

- EEO Forms 3, 6, and 7, by prime contractors

This form is submitted by all subcontractors before they begin work on the project:

- EEO Form 26 by subcontractors

This form is submitted by all suppliers, lessors, or professional services providers before they begin work on the project:

- EEO Form 29

## POSTING

The following poster should be clearly displayed on each job site, or in case of annual service agreements, in the Contractor's office:

Equal Employment Opportunity is the Law Poster

## JOB SITE VISITS

Site visits will be made by a Contract Compliance Officer, who will make their presence known to the Project Manager, Supervisor, or Foreman, and will conduct interviews with employees on site.

## PAYMENT AND EVALUATION

Upon completion of the Project, as part of the contract-awarding department's total clearance process, the Office of Business Opportunity's Contract Compliance Section must certify to the department that all EEO compliance requirements have been met.

CERTIFICATION BY BIDDER REGARDING
EQUAL EMPLOYMENT OPPORTUNITY

GENERAL

In accordance with Executive Order 11246 (30 F.R. 12319-25), the implementing rules and regulations thereof, and orders of the Secretary of Labor, a certification regarding Equal Opportunity is required of bidders or prospective contractors and their proposed subcontractors prior to the award of contracts or subcontracts.

CERTIFICATION OF BIDDER

Bidder's Name:_____

Address:_____

Telephone Number:_____ Fax :_____

Name of the Company's EEO Officer: _____

E-mail Address:_____

Web Page/URL Address:_____

IRS Employer Identification Number:_____

Work to be performed:_____

Project No: _____

1. Participation in a previous contract or subcontract.

   a. Bidder has participated in a previous contract or subcontract subject to the Equal Opportunity Clause. ☐ YES ☐NO

   b. Compliance reports were required to be filed in connection with such contract or subcontract. ☐YES ☐NO

   c. Bidder has filed all compliance reports required by Executive Orders 10925, 11114, 11246, or by regulations of the Equal Employment Opportunity Commission issued pursuant to Title VII of the Civil Rights Act of 1964. ☐ YES ☐NO

   d. If answer of Item c. is "No", please explain in detail on reverse side of this certification.

2. Dollar amount of bid:$ _____

3. Anticipated performance period in days: _____

4. Expected total number of employees to perform the proposed construction: _____

5. Nonsegregated facilities.

   a. Notice to prospective federally-assisted construction contractors

      (1) A Certification of Nonsegregated Facilities, as required by the May 9, 1967, Order (32 F.R. 7439, May 19, 1967) on Elimination of Segregated Facilities, by the Secretary of Labor, must be submitted to the recipient prior to the award of a federally-assisted construction contract exceeding $10,000 which is not exempt from the provisions of the Equal Opportunity Clause.

      (2) Contractors receiving federally-assisted construction contract awards exceeding $10,000 which are not exempt from the provisions of the Equal Opportunity Clause will be required to provide the forwarding of the following notice to prospective subcontractors for supplies and construction contracts where the subcontracts exceed $10,000 and are not exempt from the provisions of the Equal Opportunity Clause.

      The federally-assisted construction Contractor certifies that he/she does not maintain or provide any segregated facilities at any of his/her establishments, and does not permit employees to perform their services at any location, under his/her control, where segregated facilities are maintained. The federally-assisted construction Contractor certifies further that he/she will not maintain or provide segregated facilities at any of his/her establishments, and will not permit employees to perform their services at any location, under his/her control, where segregated facilities are maintained. The federally-assisted construction Contractor agrees that a breach of this certification is a violation of the Equal Opportunity Clause in this Contract. As used in this certification, the term "segregated facilities" means any waiting rooms, work areas, restrooms and washrooms, restaurants and other eating areas, time clocks, locker rooms and other storage or dressing areas, parking lots, drinking fountains, recreation or entertainment areas, transportation, and housing facilities provided for employees which are segregated by explicit directive or are in fact segregated on the basis of race, creed, color, or national origin because of habit, local custom, or otherwise. The federally-assisted construction Contractor agrees that (except where he/she has obtained identical certifications from proposed Subcontractors for specific time periods) he/she will obtain identical certifications in duplicate from proposed Subcontractors prior to the award of subcontracts exceeding $10,000 which are not exempt from the provisions of the Equal Opportunity Clause, and that he/she will retain the duplicate of such certifications in his/her files. The Subcontractor will include the original in his/her bid package.

6. Race or ethnic group designation of bidder. Enter race or ethnic group in appropriate box:

☐ White ☐ Black ☐ Hispanic

☐ Pacific Islander, Asian ☐ American Indian, Aleut.

7. Gender of Owner ☐ Male ☐ Female

REMARKS: _____

Certification - The information above is true and complete to the best of my knowledge and belief.

_____
Company Officer (Please Type)

_____ _____
Signature Date

NOTE: The penalty for making false statements in offers is prescribed in 18 U.S.C. 1001.

# Total Work Force Composition of the Company

City of Houston, Affirmative Action Requirements for All Construction Contracts

| | White | | Black | | Hispanic | | Pacific Islander/ Asian | | Alaska Native/ Amer Ind. | | Total Persons | | Total Minority | | Total Female | |
|---|---|---|---|---|---|---|---|---|---|---|---|---|---|---|---|---|
| | M | F | M | F | M | F | M | F | M | F | M | F | M | F | M | F |
| Officials and Administrators | | | | | | | | | | | | | | | | |
| Professionals | | | | | | | | | | | | | | | | |
| Paraprofessionals | | | | | | | | | | | | | | | | |
| Technicians | | | | | | | | | | | | | | | | |
| Protective Service Workers | | | | | | | | | | | | | | | | |
| Sales Workers | | | | | | | | | | | | | | | | |
| Office and Clerical | | | | | | | | | | | | | | | | |
| Skilled Craft Workers | | | | | | | | | | | | | | | | |
| Operatives (Semi-skilled) | | | | | | | | | | | | | | | | |
| Laborers (Unskilled) | | | | | | | | | | | | | | | | |
| Service / Maintenance Workers | | | | | | | | | | | | | | | | |
| Others | | | | | | | | | | | | | | | | |
| Total | | | | | | | | | | | | | | | | |

This report includes all of the company's permanent work force. For description of job categories, see Pages CC-27 through CC-29.

**Check One:** [ ] **Contractor** [ ] **Subcontractor**

**COMPANY:** _____ **DATE:** _____

## EQUAL EMPLOYMENT OPPORTUNITY COMPLIANCE PROGRAM FOR

_____

**Name of Company**

The Company's Office of Business Opportunity Program shall consist of documented good faith efforts to comply with the goals, timetables, and objectives set forth in the following Affirmative Action steps:

A. City of Houston's Specific Equal Employment Opportunity Policy and Clause as contained in City Council Ordinance No. 78-1538, passed August 9, 1978.

B. Notice of Requirement for Office of Business Opportunity to ensure Equal Employment Opportunity (Executive Order 11246).

C. Standard Federal Equal Employment Opportunity Construction Contract Specifications (Executive Order 11246).

Project: _____

_____
Company Officer (Please Type)

_____ _____
Signature Date

NOTE: The penalty for making false statements in offers is prescribed in 18 U.S.C. 1001.

SPECIAL PROVISIONS
SPECIFIC EQUAL EMPLOYMENT OPPORTUNITY POLICY

1. GENERAL

a. Equal employment opportunity requirements not to discriminate and to take affirmative action to assure equal employment opportunity are required by Executive Order 11246, as amended. The requirements set forth in these Special Provisions shall constitute the specific affirmative action requirements for Project activities under this Contract and shall supplement the notice of requirement for affirmative action to ensure equal employment opportunity and standard federal equal employment opportunity construction contract specifications.

b. The Contractor shall work with the City and the Federal Government in carrying out equal employment opportunity obligations and in their review of his/her activities under the Contract.

c. The prime Contractor and all Subcontractors holding subcontracts of $10,000 or more shall comply with the following minimum specific requirement activities of equal employment opportunity. The Contractor shall include these requirements in every subcontract of $10,000 or more with such modification of language as is necessary to make them binding on the Subcontractor.

2. EQUAL EMPLOYMENT OPPORTUNITY POLICY

The Contractor shall accept as his/her operating policy the following statement which is designed to further the provision of equal employment opportunity to all persons without regard to their race, age, color, religion, sex, or national origin, and to promote the full realization of equal employment opportunity through a positive continuing program:

It is the policy of this Company to assure that applicants are employed, and that employees are treated during employment, without regard to their race, religion, color, sex, or national origin. Such action shall include: employment, upgrading, demotion, or transfer; recruitment or recruitment advertising; layoff or termination; rates of pay or other forms of compensation; and selection for training, including apprenticeship.

3. EQUAL EMPLOYMENT OPPORTUNITY OFFICER

The Contractor shall designate and make known to the City contracting officers an equal employment opportunity officer (hereinafter referred to as the EEO Officer) who must be capable of effectively administering and promoting an active Contractor program of equal employment opportunity and who must be assigned adequate authority and responsibilities to do so.

4. DISSEMINATION OF POLICY

a. All members of the Contractor's staff who are authorized to hire, supervise, promote, and discharge employees, or who recommend such action, or who are substantially involved in such action, will be made fully cognizant of, and will implement the Contractor's equal employment opportunity policy and contractual responsibilities to provide equal employment opportunity in each grade and classification of employment. To ensure that the above agreement will be met, the following actions shall be taken as a minimum:

(1) Periodic meetings of supervisory and personnel office employees shall be conducted before the start of work and then not less often than once every six months, at which time the Contractor's equal employment opportunity policy and its implementation will be reviewed and explained. The meetings shall be conducted by the EEO Officer or other knowledgeable company official.

(2) All new supervisory or personnel office employees will be given a thorough indoctrination by the EEO Officer, or other knowledgeable company official, covering all major aspects of the Contractor's equal employment opportunity obligations, within 30 days following their reporting for duty with the Contractor.

(3) The EEO Officer or appropriate company official shall instruct all employees engaged in the direct recruitment of employees for the Project relative to the methods followed by the Contractor in locating and hiring minorities and females.

b. In order to make the Contractor's equal employment opportunity policy known to all employees, prospective employees, and potential sources of employees, i.e., schools, employment agencies, labor unions (where appropriate), college placement officers, etc., the Contractor shall take the following actions:

(1) Notices and posters setting forth the Contractor's equal employment opportunity policy shall be placed in areas readily accessible to employees, applicants for employment, and potential employees.

(2) The Contractor's equal employment opportunity policy and the procedures to implement such policy shall be brought to the attention of employees by means of meetings, employee handbooks, or other appropriate means.

5. RECRUITMENT

a. When advertising for employees, the Contractor shall include in all advertisements for employees the notation "An Equal Opportunity Employer". All such advertisements will be published in newspapers, or

other publications, having a large circulation among minority groups in the area from which the Project work force would normally be derived.

b. The Contractor shall, unless precluded by a valid bargaining agreement, conduct systematic and direct recruitment through public and private employee-referral sources likely to yield qualified minority-group applicants, including, but not limited to, State employment agencies, schools, colleges, minority-group organizations, and female recruitment agencies. To meet this requirement, the Contractor shall, through his/her EEO Officer, identify sources of potential minority and female employees, and establish with such identified sources procedures whereby such group applicants may be referred to the Contractor for employment consideration.

In the event the Contractor has a valid bargaining agreement providing for exclusive hiring hall referrals, he/she is expected to observe the provisions of that agreement to the extent that the system permits the Contractor's compliance with equal employment opportunity Contract provisions. (The U. S. Department of Labor has held that where implementation of such agreements has the effect of discriminating against minorities or women, or obligates the Contractor to do the same, such implementation violates Executive Order 11246 as amended).

c. The Contractor shall encourage his/her present employees to refer female or minority-group applicants for employment by posting appropriate notices or bulletins in areas accessible to all such employees. In addition, information and procedures with regard to referring such applicants will be discussed with employees.

6. PERSONNEL ACTIONS

a. Wage, working conditions, and employee benefits shall be established and administered, and personnel actions of every type, including hiring, upgrading, promotion, transfer, demotion, layoff and termination, shall be taken without regard to race, color, religion, sex, national origin, or age. The following procedures shall be followed:

(1) The Contractor shall conduct periodic inspections of Project sites to ensure that working conditions and employee facilities do not indicate discriminatory treatment of Project-site personnel.

(2) The Contractor shall periodically evaluate the spread of wages paid within each classification to determine any evidence of discriminatory wage practices.

(3) The Contractor shall periodically review selected personnel actions in depth to determine whether there is evidence of discrimination. Where evidence is found, the Contractor shall promptly take corrective action. If the review indicates that the discrimination may extend beyond the actions reviewed, such corrective action shall include all affected persons.

(4) The Contractor shall promptly investigate all complaints of alleged discrimination made in connection with his/her obligations under this Contract, shall attempt to resolve such complaints, and shall take appropriate corrective action. If the investigation indicates that the discrimination may affect persons other than the complainant, such corrective action shall include such other persons. Upon completion of each investigation, the Contractor shall inform every complainant of all avenues of appeal.

7. TRAINING AND PROMOTION

a. The Contractor shall assist in locating, qualifying, and increasing the skills of minority-group and women employees and applicants for employment.

b. Consistent with the Contractor's work force requirements and as permissible under Federal and State regulations, the Contractor shall make full use of training programs, i.e., apprenticeship and on-the-job training programs, for the geographical area of Contract performance.

c. The Contractor shall advise employees and applicants for employment of available training programs and entrance requirements for each.

d. The Contractor shall periodically review the training and promotion potential of minority-group and women employees and shall encourage eligible employees to apply for such training and promotion.

8. UNIONS

If the Contractor relies in whole or in part upon unions as a source of employees, he/she shall use his/her best efforts to obtain the cooperation of such unions to increase minority groups and women within the unions, and to effect referrals by such unions of minority and female employees. Actions by the Contractor, either directly or through a contractor's association acting as his/her agent, will include the procedures set forth below:

a. The Contractor shall use best efforts to develop, in cooperation with the unions, joint training programs aimed toward qualifying more minority-group members and women for membership in the unions and increasing the skills of minority-group employees and women so that they may qualify for higher-paying employment.

b. The Contractor shall use best efforts to incorporate an equal employment opportunity clause into all union agreements to the end that such unions will be contractually bound to refer applicants without regard to their race, color, religion, sex, national origin, or age.

c. The Contractor is to obtain information as to the referral practices and policies of the labor union, except that to the extent such information is within the exclusive possession of the labor union, and such labor union refuses to furnish such information to the Contractor, the Contractor shall so certify to the City and shall set forth what efforts have been made to obtain such information.

d. In the event the union is unable to provide the Contractor with a reasonable flow of minority and women referrals within the time limit set forth in the collective bargaining agreement, the Contractor shall, through independent recruitment efforts, fill the employment vacancies without regard to race, color, religion, age, sex, or national origin, making full efforts to obtain qualified and/or qualifiable minority group persons and women. (The U. S. Department of Labor has held that it shall be no excuse that the union with which the Contractor has a collective bargaining agreement providing for exclusive referral failed to refer minority employees.) In the event the union referral practice prevents the Contractor from meeting the obligations pursuant to Executive Order 11246, as amended, and these special provisions, such Contractor shall immediately notify the City.

9. SUBCONTRACTING

a. The Contractor shall use his/her best efforts to solicit bids from and to utilize minority-group and female subcontractors or subcontractors with meaningful minority-group and/or female representation among their employees.

b. The Contractor shall use his/her best efforts to assure Subcontractors' compliance with their equal employment opportunity obligations.

10. RECORDS AND REPORTS

a. The Contractor shall keep such records as are necessary to determine compliance with the Contractor's equal employment opportunity obligations. The records kept by the Contractor will be designed to indicate:

(1) The number of minority and non-minority group members and women employed in each work classification on the Project.

(2) The progress and efforts being made in cooperation with unions to increase employment opportunities for minorities and women (applicable only to contractors who rely in whole or in part on unions as a source of their work force).

(3) The progress and efforts being made in locating, hiring, training, qualifying, and upgrading minority and female employees.

(4) The progress and efforts being made in securing the services of female and minority subcontractors.

b. All records, including payrolls, must be retained for a period of three years following completion of the Contract work and shall be available at reasonable times and places for inspection by authorized representatives of the City and/or the appropriate federal agency.

CITY OF HOUSTON, TEXAS

EQUAL EMPLOYMENT OPPORTUNITY CLAUSE

Pursuant to City Council Ordinance No. 78-1538, passed August 9, 1978, all contracts entered into by the City of Houston involving the expenditure of $10,000 or more, shall incorporate the following Equal Employment Opportunity Clause:

1. The Contractor, Subcontractor, vendor, Supplier, or lessee shall not discriminate against any employee or applicant for employment because of race, religion, color, sex, national origin, or age. The Contractor, Subcontractor, vendor, Supplier, or lessee shall take affirmative action to ensure that applicants are employed and that employees are treated during employment without regard to their race, religion, color, sex, national origin, or age. Such action will include, but not be limited to, the following: employment; upgrading; demotion or transfer; recruitment advertising; layoff or termination; rates of pay or other forms of compensation; and selection for training, including apprenticeship. The Contractor, Subcontractor, vendor, Supplier, or lessee agrees to post in conspicuous places available to employees, and applicants for employment, notices to be provided by the City setting forth the provisions of this Equal Employment Opportunity Clause.

2. The Contractor, Subcontractor, vendor, Supplier, or lessee states that all qualified applicants will receive consideration for employment without regard to race, religion, color, sex, national origin, or age.

3. The Contractor, Subcontractor, vendor, Supplier, or lessee shall send to each labor union or representatives of workers with which it has a collective bargaining agreement or other contract or understanding, a notice to be provided by the agency contracting officer advising the said labor union or workers' representative of the Contractor's and Subcontractor's commitments under Section 202 of Executive Order No. 11246, and shall post copies of the notice in conspicuous places available to employees and applicants for employment.

4. The Contractor, Subcontractor, vendor, Supplier, or lessee will comply with all provisions of Executive Order No. 11246 and the rules, regulations, and relevant orders of the Secretary of Labor or other Federal Agency responsible for enforcement of the equal opportunity and affirmative action provisions applicable, and shall likewise furnish all information and reports required by the Mayor and/or Contractor Compliance Officers for purposes of investigation to ascertain and effect compliance with this program.

5. The Contractor, Subcontractor, vendor, Supplier, or lessee shall furnish all information and reports required by Executive Order No. 11246, and by the rules, regulations, and orders of the Secretary of Labor, or pursuant thereto, and shall permit access to all books, records, and accounts by the appropriate City and Federal officials for purposes of investigation to ascertain compliance with such rules, regulations, and orders. Compliance reports filed at such times as directed shall contain information as to the employment practice policies, program, and work force statistics of the Contractor, Subcontractor, vendor, Supplier, or lessee.

6. In the event of a Contractor's, Subcontractor's, vendor's, Supplier's, or lessee's non-compliance with the non-discrimination clause of this Contract or with any of such rules, regulations, or orders, this Contract may be canceled, terminated, or suspended in whole or in part, and the Contractor, Subcontractor, vendor, Supplier, or lessee may be declared ineligible for further City contracts in accordance with procedures provided in Executive Order No. 11246, and such other sanctions may be imposed and remedies invoked as provided in said Executive Order, or by rule, regulation, or order of the Secretary of Labor, or as may otherwise be provided by law.

7. The Contractor shall include the provisions of paragraphs 1 through 8 of this Equal Employment Opportunity Clause in every subcontract or purchase order unless exempted by rules, regulations, or orders of the Secretary of Labor issued pursuant to Section 204 of Executive Order No. 11246 of September 24, 1965 so that such provisions will be binding upon each Subcontractor or vendor. The Contractor shall take such action with respect to any subcontractor or purchase order as the contracting agency may direct as a means of enforcing such provisions, including sanctions for noncompliance; provided, however, that in the event the Contractor becomes involved in, or is threatened with litigation with a Subcontractor or vendor as a result of such direction by the contracting agency, the Contractor may request the United States to enter into such litigation to protect the interests of the United States.

8. The Contractor shall file and shall cause each of his Subcontractors, if any, to file compliance reports with the City in the form and to the extent as may be prescribed by the Mayor's Office of Business Opportunity. Compliance reports filed at such times as directed shall contain information as to the practices, policies, programs, employment policies, and employment statistics of the Contractor and each Subcontractor.

NOTICE OF REQUIREMENT FOR AFFIRMATIVE ACTION
TO ENSURE EQUAL EMPLOYMENT OPPORTUNITY
(EXECUTIVE ORDER 11246)

1. The Offeror's or Bidder's attention is called to the "Equal Opportunity Clause" and the "Standard Federal Equal Employment Opportunity Construction Contract Specifications" set forth herein.

2. The goals and timetables for minority and female participation, expressed in percentage terms for the Contractor's aggregate work force in each trade on all construction work in the covered area, are as follows:

| Timetable | Goals for Minority Participation for Each Trade | Goals for Female Participation for Each Trade |
|---|---|---|
| | 26.2% - 27.3% | 6.9% |

These goals are applicable to all the Contractor's construction work (whether or not it is Federal or Federally-assisted) performed in the covered area.

The Contractor's compliance with the Executive Order and the regulations in 41 CFR Part 60-4 shall be based on its implementation of the Equal Opportunity Clause, specific affirmative action obligations required by the specifications set forth in 41 CFR 60-4.3(a), and its efforts to meet the goals established for the geographical area where the Contract resulting from this solicitation is to be performed. The hours of minority and female employment and training must be substantially uniform throughout the length of the Contract, and in each trade, and the Contractor shall make a good faith effort to employ minorities and women evenly on each of its projects. The transfer of minority or female employees or trainees from Contractor to Contractor or from project to project for the sole purpose of meeting the Contractor's goals shall be a violation of the Contract, the Executive Order, and regulations in 41 CFR part 60-4. Compliance with the goals will be measured against the total work hours performed.

3. The Contractor shall provide written notification to the Director of the Office of Federal Contract Compliance Programs within 10 working days of award of any construction subcontract in excess of $10,000 at any tier for construction work under the Contract resulting from this solicitation. The notification shall list the name, address, and telephone number of the Subcontractor; employer identification number; estimated dollar amount of the subcontract; estimated starting and completion dates of the subcontract; and the geographical area in which the Contract is to be performed.

4. As used in this Notice, and in the Contract resulting from this solicitation, the "covered area" is The Houston, Texas Standard Metropolitan Statistical Area.

STANDARD FEDERAL EQUAL EMPLOYMENT OPPORTUNITY
CONSTRUCTION CONTRACT SPECIFICATIONS
(EXECUTIVE ORDER 11246)

1. As used in these specifications:

   a. "Covered area" means the geographical area described in the solicitation from which this Contract resulted;

   b. "Director" means Director, Office of Federal Contract Compliance Programs, United States Department of Labor, or any person to whom the Director delegates authority;

   c. "Employer identification number" means the Federal Social Security number used on the Employer's Quarterly Federal Tax Return, U. S. Treasury Department Form 941.

   d. "Minority" includes:

      (i) Black (all persons having origins in any of the Black African racial groups not of Hispanic origin);

      (ii) Hispanic (all persons of Mexican, Puerto Rican, Cuban, Central or South American, or other Spanish culture or origin regardless of race);

      (iii) Asian and Pacific Islander (all persons having origins in any of the original peoples of the Far East, Southeast Asia, the Indian Subcontinent, or the Pacific Islands); and

      (iv) American Indian or Alaskan Native (all persons having origins in any of the original peoples of North America and maintaining identifiable tribal affiliations through membership and participation or community identification).

2. Whenever the Contractor, or any Subcontractor at any tier, subcontracts a portion of the work involving any construction trade, it shall physically include in each subcontract in excess of $10,000 the provisions of these specifications and the Notice which contains the applicable goals for minority and female participation and which is set forth in the solicitations from which this Contract resulted.

3. If the Contractor is participating (pursuant to 41 CFR 60-4.5) in a Hometown Plan approved by the U. S. Department of Labor in the covered area either individually or through an association, its affirmative action obligations on all work in the Plan area (including goals and timetables) shall be in accordance with that Plan for

those trades which have unions participating in the Plan. Contractors must be able to demonstrate their participation in and compliance with the provisions of any such Hometown Plan. Each Contractor or Subcontractor participating in an approved Plan is individually required to comply with its obligations under the EEO clause, and to make a good faith effort to achieve each goal under the Plan in each trade in which it has employees. The overall good faith performance by other Contractors or Subcontractors toward a goal in an approved Plan does not excuse any covered Contractor's or Subcontractor's failure to take good efforts to achieve the Plan goals and timetables.

4. The Contractor shall implement the specific affirmative action standards provided in Paragraphs 7a through p of these specifications. The goals set forth in the solicitation from which this Contract resulted are expressed as percentages of the total hours of employment and training of minority and female utilization the Contractor should reasonably be able to achieve in each construction trade in which it has employees in the covered area. The Contractor is expected to make substantially uniform progress toward its goals in each craft during the period specified.

5. Neither the provisions of any collective bargaining agreement, nor the failure by a union with whom the Contractor has a collective bargaining agreement to refer either minorities or women, shall excuse the Contractor's obligations under these specifications, Executive Order 11246, or the regulations promulgated pursuant thereto.

6. In order for the non-working training hours of apprentices and trainees to be counted in meeting the goals, such apprentices and trainees must be employed by the Contractor during the training period, and the Contractor must have made a commitment to employ the apprentices and trainees at the completion of their training, subject to the availability of employment opportunities. Trainees must be trained pursuant to training programs approved by the U. S. Department of Labor.

7. The Contractor shall take specific affirmative actions to ensure equal employment opportunity. The evaluation of the Contractor's compliance with these specifications shall be based upon its effort to achieve maximum results from its actions. The Contractor shall document these efforts fully, and shall implement affirmative action steps at least as extensive as the following:

   a. Ensure and maintain a working environment free of harassment, intimidation, and coercion at all sites, and in all facilities at which Contractor's employees are assigned to work. The Contractor, where possible, shall assign two or more women to each construction project. The Contractor shall specifically ensure that all foremen, superintendents, and other on-site supervisory personnel are aware of and carry out the Contractor's obligation to maintain such a working environment, with specific attention to minority or female individuals working at such sites or in such facilities.

b. Establish and maintain a current list of minority and female recruitment sources; provide written notification to minority and female recruitment sources and to community organizations when the Contractor or its unions have employment opportunities available, and maintain a record of the organizations' responses.

c. Maintain a current file of the names, addresses, and telephone numbers of each minority and female off-the-street applicant and minority or female referral from a union, a recruitment source, or community organization and of what action was taken with respect to each such individual. If such individual was sent to the union hiring hall for referral and was not referred back to the Contractor by the union or, if referred, not employed by the Contractor, this shall be documented in the file with the reason therefor, along with whatever additional actions the Contractor may have taken.

d. Provide immediate written notification to the Director when the union or unions with which the Contractor has a collective bargaining agreement has not referred to the Contractor a minority person or woman sent by the Contractor, or when the Contractor has other information that the union referral process has impeded the Contractor's efforts to meet its obligations.

e. Develop on-the-job training opportunities and/or participate in training programs for the area which expressly include minorities and women, including upgrading programs and apprenticeship and trainee programs relevant to the Contractor's employment needs, especially those programs funded or approved by the Department of Labor. The Contractor shall provide notice of these programs to the sources compiled under 7b above.

f. Disseminate the Contractor's EEO policy by providing notice of the policy to unions and training programs and requesting their cooperation in assisting the Contractor in meeting its EEO obligations by including it in any policy manual and collective bargaining agreement; by publicizing it in the company newspaper, annual report, etc.; by specific review of the policy with all management personnel and with all minority and female employees at least once a year; and by posting the company EEO policy on bulletin boards accessible to all employees at each location where construction work is performed.

g. Review, at least annually, the company's EEO policy and affirmative action obligations under these specifications with all employees having any responsibility for hiring, assignment, layoff, termination, or other employment decisions, including specific review of these items with on-site supervisory personnel such as superintendents, general foremen, etc., prior to the initiation of construction work at any job site. A written record shall be made and maintained identifying the time and place of

these meetings, persons attending, subject matter discussed, and disposition of the subject matter.

h. Disseminate the Contractor's EEO policy externally by including it in any advertising in the news media, specifically including minority and female news media, and providing written notification to and discussing the Contractor's EEO policy with other contractors and subcontractors with whom the Contractor does or anticipates doing business.

i. Direct its recruitment efforts, both oral and written, to minority, female and community organizations, to schools with minority and female students, and to minority and female recruitment and training organizations serving the Contractor's recruitment area and employment needs. Not later than one month prior to the date for the acceptance of applications for apprenticeship or other training by any recruitment source, the Contractor shall send written notification to organizations such as the above, describing the openings, screening procedures, and tests to be used in the selection process.

j. Encourage present minority and female employees to recruit other minority persons and women and, where reasonable, provide after school, summer, and vacation employment to minority and female youth both on the site and in other areas of a Contractor's work force.

k. Validate all tests and other selection requirements where there is an obligation to do so under 41 CFR Part 60-3.

l. Conduct, at least annually, an inventory and evaluation at least of all minority and female personnel for promotional opportunities and encourage these employees to seek or to prepare, through appropriate training, etc., for such opportunities.

m. Ensure that seniority practices, job classifications, work assignments, and other personnel practices do not have a discriminatory effect by continually monitoring all personnel and employment-related activities to ensure that the EEO policy and the Contractor's obligations under these specifications are being carried out.

n. Ensure that all facilities and company activities are nonsegregated except that separate or single-user toilet and necessary changing facilities shall be provided to assure privacy between the sexes.

o. Document and maintain a record of all solicitations of offers for subcontracts from minority and female construction contractors and suppliers, including circulation of solicitations to minority and female contractor associations and other business associations.

p. Conduct a review, at least annually, of all supervisors' adherence to and performance under the Contractor's EEO policies and affirmative action obligations.

8. Contractors are encouraged to participate in voluntary associations which assist in fulfilling one or more of their affirmative action obligations (7a through p). The efforts of a contractor association, joint contractor union, contractor-community, or other similar group of which the Contractor is a member and participant, may be asserted as fulfilling any one or more of its obligations under 7a through p of these Specifications provided that the Contractor actively participates in the group, makes every effort to assure that the group has a positive impact on the employment of minorities and women in the industry, ensures that the concrete benefits of the program are reflected in the Contractor's minority and female work force participation, makes a good faith effort to meet its individual goals and timetables, and can provide access to documentation which demonstrates the effectiveness of actions taken on behalf of the Contractor. The obligation to comply, however, is the Contractor's and failure of such a group to fulfill an obligation shall not be a defense for the Contractor's noncompliance.

9. A single goal for minorities and a separate single goal for women have been established. The Contractor, however, is required to provide equal employment opportunity and to take affirmative action for all minority groups, both male and female, and all women, both minority and non-minority. Consequently, the Contractor may be in violation of the Executive Order if a particular group is employed in a substantially disparate manner (for example, even though the Contractor has achieved its goals for women generally, the Contractor may be in violation of the Executive Order if a specific minority group of women is under utilized).

10. The Contractor shall not use the goals and timetables or affirmative action standards to discriminate against any person because of race, color, religion, sex, or national origin.

11. The Contractor shall not enter into any subcontract with any person or firm debarred from Government contracts pursuant to Executive Order 11246.

12. The Contractor shall carry out such sanctions and penalties for violation of these specifications and of the Equal Opportunity Clause, including suspension, termination, and cancellation of existing subcontracts as may be imposed or ordered pursuant to Executive Order 11246, as amended, and its implementing regulations, by the Office of Federal Contract Compliance Programs. Any Contractor who fails to carry out such sanctions and penalties shall be in violation of these specifications and Executive Order 11246, as amended.

13. The Contractor, in fulfilling its obligations under these specifications, shall implement specific affirmative action steps, at least as extensive as those standards prescribed in Paragraph 7 of these specifications, so as to achieve maximum results from its efforts to ensure equal employment opportunity. If the

Contractor fails to comply with the requirements of the Executive Order, the implementing regulations, or these specifications, the Director shall proceed in accordance with 41 CFR 60-4.B.

14. The Contractor shall designate a responsible official to monitor all employment-related activity to ensure that the company EEO policy is being carried out, to submit reports relating to the provisions hereof as may be required by the Government, and to keep records. Records shall at least include for each employee the name, address, telephone number, construction trade, union affiliation, if any, employee identification number when assigned, social security number, race, sex, status (e.g., mechanic, apprentice, trainee, helper, or laborer), dates of changes in status, hours worked per week in the indicated trade, rate of pay, and locations at which the work was performed. Records shall be maintained in an easily-understandable and retrievable form; however to the degree that existing records satisfy this requirement, contractors shall not be required to maintain separate records.

15. Nothing herein provided shall be construed as a limitation upon the application of other laws which establish different standards of compliance or upon the application of requirements for the hiring of local or other area residents (e.g., those under the Public Works Employment Act of 1977 and the Community Development Block Grant Program).

DESCRIPTION OF JOB CATEGORIES

Officials, Managers, and Administrators

Occupations requiring administrative personnel who set board policies, exercise overall responsibility for the execution of these policies, or provide specialized consultation on a regional, district, area basis, or direct individual departments or special phases of a firm's operations.

Includes: Officials, executives, middle management, plant managers, department managers, superintendents, salaried foremen who are members of management, purchasing agents, buyers, bureau chiefs, directors, deputy directors, wardens, examiners, sheriffs, police and fire chiefs, and kindred workers.

Professionals

Occupations which require specialized and theoretical knowledge which is usually acquired through college or experience of such kind and amount as to provide a comparable background.

Includes: Accountants, auditors, airplane pilots and navigators, architects, artists, chemists, designers, dieticians, editors, engineers, lawyers, librarians, mathematicians, natural scientists, registered professional nurses, personnel and labor relations workers, physical scientists, teachers, social workers, doctors, psychologists, economists, systems analysts, employment and vocational rehabilitation counselors, instructors, police and fire captains and lieutenants, and kindred workers.

Paraprofessionals

Occupations in which workers perform some of the duties of a professional or technician in a supportive role, which usually requires less formal training and/or experience normally required for professional or technical status. Such positions may fall within an identified pattern of a "New Careers" concept.

Includes: Library assistants, medical aides, child support workers, police auxiliary, welfare service aides, recreation assistants, homemakers aides, home health aides, and kindred workers.

Technicians

Occupations requiring a combination of basic scientific knowledge and manual skill which can be obtained through about two (2) years of post high school education, such as is offered in many technical institutes and junior colleges, or through equivalent on-the-job training.

Includes: Computer programmers and operators, draftsmen, engineering aides, junior engineers, mathematical aides, licensed practical or vocational nurses, photographers, radio operators, scientific assistants, surveyors, technical illustrators, technicians (medical, dental, electronics, physical sciences), police and fire sergeants, and kindred workers.

Protective Service Workers

Occupations in which workers are entrusted with public safety, security, and protection from destructive forces.

Includes: Police patrol officers, fire fighters, guards, deputy sheriffs, bailiffs, correctional officers, detectives, marshals, harbor patrol officers, and kindred workers.

Sales Workers

Occupations engaging wholly or primarily in direct selling.

Includes: Advertising agents and salespersons, insurance agents and brokers, real estate agents and brokers, stock and bond salespersons, demonstrators, salespersons and sales clerks, grocery clerks, cashiers, and kindred workers.

Office and Clerical

Occupations in which workers are responsible for internal and external communications, recording and retrieval of data and/or information and other paper work required in an office predominantly non-manual, though some manual work not directly involved with altering or transporting the products is included.

Includes: Bookkeepers, cashiers, collectors (bills and accounts), messengers and office helpers, office machine operators, shipping and receiving clerks, stenographers, typists and secretaries, telegraph and telephone operators, court transcribers, hearing reporters, statistical clerks, dispatchers, license distributors, payroll clerks, and kindred workers.

Skilled Craft Workers

Occupations in which workers perform jobs which require special manual skill through on-the-job training and experience, or through apprenticeship or other formal training programs. These workers exercise considerable independent judgment and usually receive an extensive period of training.

Includes: The building trades, hourly paid foremen and leadmen who are not members of management, mechanics and repairmen, skilled machining occupations, compositors and typesetters, electricians, engravers, job setters

(metal), motion picture projectionists, pattern and model makers, stationary engineers, tailors, heavy equipment operators, carpenters, and kindred workers.

Operatives (semi-skilled)

Workers who operate machine or processing equipment or perform other factory-type duties of intermediate skill level which can be mastered in a few weeks and require only limited training.

Includes: Apprentices (auto mechanics), plumbers, bricklayers, carpenters, electricians, mechanics, building trades, metal workers, machinists, printing trades, operatives, attendants (auto service and parking), blasters, chauffeurs, deliverymen, dressmakers and seamstresses (except factory), dryers, furnacemen, heaters (metal), laundry and dry cleaning operatives, milliners, miners, motormen, oilers, greasers, etc. (except auto), painters (except construction and maintenance), photographic process workers, stationary firemen, truck and tractor drivers, weavers (textile), welders and flame cutters, and kindred workers.

Laborers (unskilled)

Workers in manual occupations which generally require no special training. These workers perform elementary duties that may be learned in a few days and require the application of little or no independent judgment.

Includes: Garage workers, car washers and greasers, gardeners (except farm) and groundskeepers, longshoremen and stevedores, lumbermen, craftsmen, and wood choppers, laborers performing lifting, digging, mixing, loading, and pulling operations, and kindred workers.

Service/Maintenance Workers

Occupations in which workers perform duties which result in or contribute to the comfort, convenience, hygiene or safety for the general public or which contribute to the upkeep and care of buildings, facilities or grounds, or public property. Workers in this group may operate machinery.

Includes: Chauffeurs, laundry and dry cleaning operatives, truck drivers, trash collectors, custodial personnel, gardeners and groundskeepers, construction laborers, attendants (hospital and other institutions), professional and personal service, counter and fountain workers, elevator operators, firemen and fire protection, guards, watchmen and doorkeepers, stewards, porters, waiters, and kindred workers.

# CERTIFICATION BY PROPOSED SUBCONTRACTOR REGARDING EQUAL EMPLOYMENT OPPORTUNITY

_____
Name of Prime Contractor

_____
Address

## GENERAL

In accordance with Executive Order 11246 (30 F.R. 12319-25), the implementing rules and regulations thereof, and orders of the Secretary of Labor, a certification regarding Equal Opportunity is required of bidders or prospective contractors and their proposed subcontractors prior to the award of contracts or subcontracts.

## SUBCONTRACTOR'S CERTIFICATION

Subcontractor's Name: _____

Address: _____

IRS Employer Identification Number: _____

Job Description : _____

1. Participation in a previous contract or subcontract.

   a. Subcontractor has participated in a previous contract or subcontract subject to the Equal Opportunity Clause. ____YES ____NO

   b. Compliance reports were required to be filed in connection with such contract or subcontract. ____YES ____NO

   c. Subcontractor has filed all compliance reports required by Executive Orders 10925, 11114, 11246, or by regulations of the Equal Employment Opportunity Commission issued pursuant to Title VII of the Civil Rights Act of 1964. ____YES ____NO

   d. If answer of Item c. is "No", please explain in detail on reverse side of this certification.

2. Dollar amount of proposed subcontract: $ _____

3. Anticipated performance period in days: _____

4. Expected total number of employees to perform the proposed subcontract: _____

5. Nonsegregated facilities.

   a. Notice to prospective federally-assisted construction contractors
      (1) A Certification of Nonsegregated Facilities, as required by the May 9, 1967, order (32 F.R. 7439, May 19, 1967) on Elimination of Segregated Facilities, by the Secretary of Labor, must be submitted to the Contractor prior to the award of a subcontract exceeding $10,000 which is not exempt from the provisions of the Equal Opportunity Clause.
      (2) Contractors receiving subcontract awards exceeding $10,000 which are not exempt from the provisions of the Equal Opportunity Clause will be required to provide for the forwarding of this notice to prospective subcontractors for supplies and construction contracts where the subcontracts exceed $10,000 and are not exempt from the provisions of the Equal Opportunity clause.

   b. Certification of non-segregated facilities

      The federally-assisted construction contractor certified that he/she does not maintain or provide any segregated facilities at any of his/her establishments, and does not permit employees to perform their services at any location, under his/her control, where segregated facilities are maintained. The federally-assisted construction Contractor certifies further that he/she will not maintain or provide any segregated facilities at any of his/her establishments, and will not permit employees to perform their services at any location, under his/her control, where segregated facilities are maintained. The federally-assisted construction Contractor agrees that a breach of this certification is a violation of the Equal Opportunity Clause in this Contract. As used in this certification, the term "segregated facilities" means any waiting rooms, work areas, restrooms and washrooms, restaurants, and other eating areas, time clocks, locker rooms and other storage or dressing areas, parking lots, drinking fountains, recreation or entertainment areas, transportation, and housing facilities provided for employees which are segregated by explicit directive or are in fact segregated on the basis of race, creed, color, or national origin because of habit, local custom, or otherwise. The federally-assisted construction Contractor agrees that (except where he/she has obtained identical certifications from proposed Subcontractors for specific time periods) he/she will obtain identical certifications in duplicate from proposed Subcontractors prior to the award of subcontracts exceeding $10,000 which are not exempt from the provisions of the Equal Opportunity Clause, and that he/she will retain the duplicate of such certifications in his/her files. The Contractor will include the original in his/her Bid Package.

6. Race or ethnic group designation of bidder. Enter race or ethnic group in appropriate box:

☐ White ☐ Black ☐ Hispanic

☐ Pacific Islander, Asian ☐ American Indian, Aleut.

7. Gender

☐ Male ☐ Female

REMARKS: _

Certification - The information above is true and complete to the best of my knowledge and belief.

_____
Company Officer (Please Type)

_____ _____
Signature Date

NOTE: The penalty for making false statements in offers is prescribed in 18 U.S.C. 1001.

## Certification by Proposed Material Suppliers, Lessors, and Professional Service Providers Regarding Equal Employment Opportunity

Company Name: _____ $_____
(Supplier, Lessor, Professional Service Provider) (Amount of Contract)

Company Address: _____

Company Telephone Number: _____ Fax: _____

E-mail Address: _____

Web Page/URL Address: _____

Company Tax Identification Number: _____

Project No.: [*WBS/CIP/AIP/File No.*] _____

Project Name: [*Legal Project Name*] _____

In accordance with the City of Houston Ordinance 78-1538, Supplier/Lessor/Professional Service Provider represents to be an equal opportunity employer and agrees to abide by the terms of the Ordinance. This certification is required of all Suppliers/Lessors/Professional Service Providers (herein Supplier) with contracts in the amount of $10,000.00 or more.

[ ] Yes [ ] No Supplier agrees not to discriminate against any employee or applicant for employment because of race, religion, color, sex, national origin, or age.

[ ] Yes [ ] No Supplier agrees that all qualified applicants will receive consideration for employment without regard to race, religion, color, sex, national origin, or age.

[ ] Yes [ ] No Supplier will comply with all provisions of Executive Order No. 11246 and rules, regulations and applicable orders of the Department of Labor or other Federal Agency responsible for enforcement of applicable equal opportunity and affirmative action provisions and will likewise furnish all information and reports required by the Mayor or Contract Compliance Officers for the purpose of investigation to ascertain and effect compliance with the City of Houston's Office of Affirmative Action and Contract Compliance.

[ ] Yes [ ] No The Supplier shall file and cause their sub-tier contractors to file compliance reports with the City in the form and to the extent as may be prescribed by the Mayor or Contract Compliance Officers. Compliance reports filed at such times as directed shall contain information including, but not limited to, the practices, policies, programs, and employment policies.

I hereby certify that the above information is true and correct.

_____ _____
COMPANY OFFICER (Signature) DATE

_____
NAME AND TITLE (Print or type)

END OF DOCUMENT

Document 00808

# REQUIREMENTS FOR THE CITY OF HOUSTON PROGRAM FOR MINORITY, WOMEN, AND SMALL BUSINESS ENTERPRISES AND PERSONS WITH DISABILITIES ENTERPRISES (PDBE)

## CONSTRUCTION CONTRACTS

## I. GENERAL

**A.** CITY AUTHORITIES

**1.** The "OBO Director" is the City of Houston's Office of Business Opportunity Director, or his or her designee.
City of Houston
611 Walker Street, 7th Floor
Houston, Texas 77002

**2.** The "Contracting Department" for this Project is the City of Houston Department specified in Document 00520 – Agreement.

**3.** The "Project Manager" is for this Project specified in Document 00550 – Contract Approval Notification.

## II. REOCCURRING REPORTS THAT MUST BE SUBMITTED DURING THE COURSE OF THE CONTRACT:

**A.** MWSBE MONTHLY REPORT PROCESS

The Contractor shall complete the MWSBE Monthly Utilization Report in the Contract Compliance and Monitoring System (available at https://houston.mwdbe.com/).

**B.** The Contractor shall comply with further, applicable instructions regarding reporting and compliance as provided in Sections III.E and III.I below.

## III. BUSINESS ENTERPRISE PROGRAM REQUIREMENTS:

### A. PURPOSE

This Document facilitates implementation of City of Houston, Tex. Code of Ordinances Chapter 15, Article V, § 15-81 et seq., relating to MWSBE contract participation, and Code of Ordinances Chapter 15, Article VI, § 15-90 et seq., relating to PDBE contract participation (collectively, the "Business Enterprise Program or "MWSBE"). City of Houston, Tex. Ordinance 2013-0428, May 8, 2013.

### B. POLICY

It is the policy of the City to encourage the full participation of Minority and Women-owned Business Enterprises, Small Business Enterprises, and Persons with Disabilities Business Enterprises in all phases of its procurement activities and to afford them a full and fair opportunity to compete for City contracts at all levels.

### C. POLICY ELEMENTS

1. The Contractor agrees to ensure that MWSBE firms have a full and fair opportunity to participate in the performance of City contracts. In this regard the Contractor shall make all reasonable Good Faith Efforts to meet the Contract Goals for this Contract.

2. The Contractor and any Subcontractor shall not discriminate on the basis of race, color, religion, national origin, or sex in the performance of City contracts.

3. Contractor's performance in meeting the Participation Plan Percentage will be monitored during the construction phase of the Contract by the OBO Director and Contracting Department.

### D. PERCENTAGE GOALS

The MWSBE goals and PDBE goals, if any, for the Work are specified in Document 00800 – Supplementary Conditions Goals.

## E. CONTRACTOR RESPONSIBILITIES

### 1. Prior to Award:

The Bidder shall submit MWSBE documents in accordance with the requirements of Document 00410 – Bid Form Part A.

**a.** In accordance with the Code of Ordinances and the OBO Good Faith Efforts Policy (Attachment A), the Department shall approve an Apparent Low Bidder's MWSBE Participation Plan–Document 00470 (the "Bidder's Plan" or "Plan") within 3 business days of the Bid Opening only if the Department representative determines that Bidder's Plan meets the advertised Contract Goal and is administratively complete.

**b.** If the Department cannot approve the Bidder's Plan, it shall forward the Plan to the OBO Director, who shall review the Bidder's Plan, and if applicable, the Bidder's Document 00471 (Record of Good Faith Efforts) and Document 00472 (Pre-Award Deviation Request) and determine whether the Bidder has made Good Faith Efforts to meet the Contract Goals within 10 business days of the Bid Opening.

**c.** If the OBO Director determines that the Bidder has failed to provide a valid participation plan or make Good Faith Efforts or if the Bidder fails to provide documents and associated information required by this Document 00808 or reasonably requested in writing by the OBO Director, the OBO Director may declare the Bidder to be non-responsible.

**d.** If the OBO Director determines that the Bidder has made Good Faith Efforts, the Director may approve the Bidder's Contract Goal Deviation request. Thereafter, the Bidder/Contractor shall be bound by the Plan, as approved by the OBO Director.

**e.** The Contractor shall:

**(1)** ensure that all MWSBE firms listed in the Plan are certified by the Office of Business Opportunity prior to bid date. Qualified, non-certified firms may obtain priority consideration for certification if no more than two firms are certified with the same capability as the non-certified firm.

**(2)** execute written contracts with all certified Subcontractors and Suppliers. All such contracts must be executed and sent to the OBO Director and Contracting Department within 30 days after the date of the Notice to Proceed and must include provisions set forth in Articles 3 and 5 of Document 00700 - General Conditions.

**(3)** designate an MWSBE liaison officer who will administer the Contractor's MWSBE program and who shall document and maintain records of Good Faith Efforts to subcontract with MWSBE Subcontractors and Suppliers.

### 2. After Award:

**a.** The Contractor shall submit MWSBE Monthly Utilization Reports, requested in Article II above.

**b.** The Contractor shall complete and submit to the OBO Director a Post-Award Deviation Request–Document 00572 ("Post-Award Deviation Request") if the Contractor reasonably believes that it will not achieve the Business Enterprise Program Participation Plan Percentage documented in the Plan. The Contractors shall also submit to the OBO Director, with a Copy to the Contracting Department, a Record of Post-Award Good Faith Efforts (Document 00571) for each Certified Firm that the Contractor does not use in accordance with the Approved Plan before the Contractor uses another firm to perform the work.

**c.** The Contractor shall conform to the Plan unless the OBO Director grants a Post-Award Deviation Request. The OBO Director shall approve or reject a Deviation Request within 5 business days of receipt of the Deviation Request.

**d.** The OBO Director shall grant a Post-Award Deviation Request if

**(1)** for a reason beyond the Contractor's control, the Contractor is unable to use the certified MWSBE firm in the Plan to perform the specified work. In such cases, the Contractor shall use and document Good Faith Efforts to find a similarly qualified, certified MWSBE firm to perform such specified work; or

**(2)** the Contractor reasonably believes that, due to a change of scope, execution of the work in accordance with the directions from the Contracting Department is unlikely to meet the terms of the Plan. In such cases, the Contractor shall use and document Good Faith efforts to achieve a reasonable amount of MWSBE participation on the remaining work on the Contract.

**(3)** The OBO Director shall not unreasonably withhold approval of a Post-Award Deviation Request.

**e.** After the Date of Substantial Completion, the OBO Director shall evaluate the Contractor's Good Faith Efforts towards meeting the Plan, as it may amended.

**f.** If the Contractor fails to conform to the Plan and fails to submit a Post-Award Deviation Request or provide documents and associated information required by the Good Faith Efforts Policy or reasonably requested in writing by the OBO Director, the OBO Director may impose sanctions in accordance with Article VI of this Document 00808.

**F.** ELIGIBILITY OF MWSBE FIRMS FOR SUBCONTRACTING

**1.** To ensure that the City's Business Enterprise Program benefits only those firms that are owned and controlled by a minority person(s), a woman (women),a person(s) with a disability, or a small business enterprise, the Office of Business Opportunity will certify the eligibility of MWSBE and PDBE Contractors, Subcontractors, and Suppliers. Contact the Office of Business Opportunity Certification Section at 832-393-0600 for information regarding certification.

**2.** The Office of Business Opportunity maintains a Certified Minority, Women and Small Business Enterprises and Disabilities Business Enterprises Directory on the City's website. This Directory also lists federally-designated Disadvantaged Business Enterprises (DBEs).

**NOTE: MWSBE firms, even if certified by another agency, may not qualify for Contract Goals unless certified by the Office of Business Opportunity prior to acceptance of the Participation Plan.**

**G.** DETERMINATION OF MWSBE PARTICIPATION

MWSBE participation shall be counted toward meeting the Contract Goals in response to the following:

**1.** Once a firm is certified as a MWSBE firm, the total dollar value of the subcontract awarded to the MWSBE firm is counted toward the Contract Goals (See Sections III.G.4 and III.G.5 below). Safety and Participation goals do not count as a single goal concerning MWSBE/DBE requirements.

**2.** When the Contractor or Subcontractor is in a joint venture with one or more MWSBE firms, the OBO Director shall determine the percent of participation resulting from such joint venture to be counted toward the Contract Goals.

**3.** Contractor may count toward its Contract Goals only those MWSBE Subcontractors/ Suppliers performing a Commercially Usefully Function.

**a.** **COMMERCIALLY USEFUL FUNCTION** means a discrete task or group of tasks, the responsibility for performance of which shall be discharged by the MWSBE firm by using its own forces or by actively supervising on-site the execution of the tasks by another entity for whose work the MWSBE firm is responsible. In determining whether a certified firm is performing a commercially useful function, factors including but not limited to the following shall be considered: (1) whether the firm has the skill and expertise to perform the work for which it is being utilized and possesses all necessary licenses; (2) whether the firm is in the business of performing, managing, or supervising the work for which it has been certified and is being utilized; and

(3) whether it is performing a real and actual service that is a distinct and verifiable element of the work called for in a contract. Without limiting the generality of the foregoing, a MWSBE will not be considered to be performing a commercially useful function, if it subcontracts to non-MWSBE firms or to other MWSBE firms, more than 50 percent of a contract being counted toward the applicable Contract Goals, unless such subcontracting in excess of 50 percent has been expressly approved by the OBO Director in a Goal or Plan Deviation Request (Document 00472 or Document 00572) (either pre-bid or post award).

**b.** The OBO Director shall approve a Plan Deviation Request if the Contractor demonstrates that the industry standard for the type of work involved is to subcontract over 50 percent of the work.

**4.** A MWSBE firm cannot subcontract more than 50 percent of the work for which it is responsible to perform unless the OBO Director grants a Deviation Approval.

**5.** The Contractor may count 100 percent of MWSBE Manufacturer Supplier's participation and 60 percent of MWSBE Non-Manufacturer Supplier's participation toward its Contract Goals. Such MWSBE Supplier contracts shall not exceed 50 percent of contract's goals.

**6.** The OBO Policy and Procedures Manual, as amended, shall apply to the Contract for other determinations regarding counting MWSBE participation not explicitly provided for in the Contract.

## H. CONTRACTOR COMPLIANCE

To ensure compliance with MWSBE requirements, the OBO Director and Contracting Department will monitor Contractor's efforts regarding MWSBE Subcontractors/Suppliers during the performance of this Contract. This may be accomplished through the following: job site visits, reviewing of records and reports, and interviews of randomly selected personnel.

I. RECORDS AND REPORTS

1. In accordance with II.A of this Document, the Contractor shall submit an initial report outlining MWSBE participation, 40 days after the Notice to Proceed date, and on or before the 15th day of each month thereafter until all MWSBE subcontracting or material supply activity is completed. Each report shall cover the preceding month's activity. The Contractor shall use the MWSBE Contract Compliance and Monitoring System (B2G Now) to meet this requirement.

2. Contractor shall maintain the following records for review upon request by the OBO Director or Contracting Department:

   a. Copies of executed Subcontractor agreements and purchase orders;
   b. Documentation of payments and other transactions with MWSBE Subcontractors/ Suppliers;
   c. Appropriate explanations of any changes or replacements of MWSBE Subcontractors/Suppliers;

**NOTE: All replacement MWSBE Subcontractors/Suppliers must be certified by the Office of Business Opportunity.**

   d. Any other records required by the OBO Director or Contracting Department.

3. If a Participation Plan Percentage is not being met, the monthly report shall include a narrative description of the progress being made in MWSBE participation. If sufficient MWSBE Subcontractors or Suppliers to meet the Participation Plan Percentage are being utilized, they should be identified by name and the dollar amount paid to date for work performed or materials furnished by each MWSBE during the monthly period. Reports are required when no activity has occurred in a monthly period.

4. Contractor shall retain all such records for a period of four years following completion of the Work and shall be available at reasonable times and places for inspection by authorized representatives of the City including the City Controller.

**IV. SANCTIONS:**

A. SUSPENSION PERIOD AND WAIVER

Pursuant to Section 15-86 of the Code of Ordinances, the OBO Director is authorized to suspend for a period of up to, but not to exceed, five years, any Contractor who has failed to make Good Faith Efforts.

**B.** GUIDELINES FOR IMPOSITION OF SANCTIONS

1. **General:**
   - **a.** The OBO Director shall not impose any sanction except upon evidence of specific conduct on the part of a MWSBE or Contractor that is inconsistent with or in direct contravention of specific applicable requirements for Good Faith Efforts.
   - **b.** Imposition and enforcement of suspensions shall be consistent with applicable state law.

2. **Severity of Sanctions:**
   - **a.** In determining the length of any suspension, the OBO Director shall consider the following factors:
     - **(1)** Whether the failure to comply with applicable requirements involved intentional conduct or, alternatively, may be reasonably concluded to have resulted from a misunderstanding on the part of the Contractor or MWSBE of the duties imposed on them by Article V of Chapter 15 of the Code of Ordinances and these procedures;
     - **(2)** The number of specific incidences of failure by Contractor or MWSBE to comply;
     - **(3)** Whether the Contractor or MWSBE has been previously suspended;
     - **(4)** Whether the Contractor or MWSBE has failed or refused to provide the OBO Director with any information requested by the Director or required to be submitted to the Director pursuant to law or these procedures;
     - **(5)** Whether the Contractor or MWSBE has materially misrepresented any applicable facts in any filing or communication to the OBO Director; and
     - **(6)** Whether any subsequent restructuring of the subject business or other action has been undertaken to cure the deficiencies in meeting applicable requirements.
   - **b.** Suspensions may be for any length of time not to exceed five years. Suspensions in excess of one year shall be reserved for cases involving intentional or fraudulent misrepresentation or concealment of material facts, multiple acts in contravention of applicable requirements, cases where the Contractor or MWSBE has been previously suspended, or other similarly egregious conduct.

**C.** DELEGATION

A decision to implement a suspension may be taken after notice and an opportunity for a hearing by an impartial person(s) designated by the OBO Director as the hearing officer.

The hearing officer(s) shall not have participated in the actions or investigations giving rise to the suspension hearing.

**D.** NOTICE

**1.** Prior to imposing any suspension, the OBO Director shall deliver written notice to the Contractor or MWSBE setting forth the grounds for the proposed suspension and setting a date, time, and place to appear before the hearing officer(s) for a hearing on the matter.

**2.** Any notice required or permitted to be given hereunder to any Contractor or MWSBE may be given either by personal delivery or by certified United States mail, postage prepaid, return receipt requested, addressed to their most recent address as specified in the records of the Office of Business Opportunity or in the Contract if no address is on file with the Office of Business Opportunity.

**E.** HEARING PROCEDURES

Proceedings before a hearing officer shall be conducted informally and in accordance with the OBO Policy and Procedures Manual, as amended, provided that each party may be represented by counsel and may present evidence and cross-examine witnesses. The City shall have the burden to prove by a preponderance of evidence that the Contractor's or MWSBE firm's actions constitute misconduct or failure to make Good Faith Efforts. The decision shall be reduced to writing and notice provided to the Contractor or MWSBE.

**F.** APPEALS

Appeals authorized pursuant to Section 15-86(b) of the Code of Ordinances shall be conducted by the OBO Director. Pursuant to Section 15-86(b), The contractor may appeal the OBO Director's decision in accordance with Section 15-23 of the Code of Ordinances and OBO Policy and Procedures.

ATTACHMENT A

# City of Houston
## Office of Business Opportunity
## Good Faith Efforts Policy

**General Policy.**

Good Faith Efforts are steps taken to achieve an Contract Goal or other requirements which, by their scope, intensity and usefulness demonstrates the bidder's responsiveness to fulfill the business opportunity objective prior to the award of a contract, as well as the contractor's responsibility to put forth measures to meet or exceed the Contract Goal throughout the duration of the contract.

Good Faith Efforts are required to be made and demonstrated by an apparent successful bidder on goal oriented contracts or proposer on a regulated contract prior to award of a contract. Good Faith Efforts are required on professional services and construction contracts and on procurement of goods and non-professional service contracts with goals. If a bidder, when submitting a participation plan at the time of bid or proposal submission, anticipates it cannot or will not meet the Contract Goal prior to the award, the bidder must demonstrate to Office of Business Opportunity ("OBO") it has made Good Faith Efforts to eet the Contract Goal, to be eligible for the contract award.

Good Faith Efforts shall be evaluated on a case-by-case basis in making a determination whether a bidder or contractor is in compliance with this policy. The efforts employed by a bidder or contractor should be those that one could reasonably expect a bidder or contractor to take if the bidder were actively and aggressively attempting to obtain MWSBE participation sufficient to meet the Contract Goal. Efforts taken that are mere formalities or other perfunctory acts shall not be considered Good Faith Efforts to meet Contract Goals.

The factors provided herein are representative of the types of actions OBO will consider in determining whether the bidder or contractor made Good Faith Efforts to obtain MWSBE participation to meet the Contract Goal. The factors prescribed below are not intended to be a mandatory checklist, nor is it intended to be exhaustive or exclusive. OBO may consider other factors or types of efforts that may be relevant in appropriate cases.

If a contractor fails to submit Good Faith Efforts documentation as provided in this Policy, it waives the right to appeal OBO decisions related to this Policy. OBO will review all the efforts made by the contractor, including the quality and quantity of those efforts.

**Pre–Award.**

A bidder must submit a participation plan (Document 00470) to OBO at the time the bidder submits the bid. If the participation by certified MWSBE subcontractors documented on the participation plan ("participation") is less than the Contract Goal, a bidder should submit a Record of Good Faith Efforts (Document 00471) with the bid. A bidder should also submit a request for a deviation (Document 00472) if the bidder, having used Good Faith Efforts, reasonably believes that it cannot meet the Contract Goal or a commercially useful deviation.

In making a determination that the bidder has made a good faith effort to meet the Contract Goals, OBO shall consider specific documentation concerning the steps taken to obtain MWSBE participation, with a consideration of, by way of illustration and not limitation, whether the bidder demonstrated a genuine effort to comply with the following factors:

1. Attended any pre-bid or pre-proposal meetings scheduled by the City Department;

2. Followed up with MWSBEs that attended the pre-bid or pre-proposal meetings to discuss subcontracting and supplier opportunities and contacted MWSBEs listed in the City's online directory;

3. Conducted outreach with minority and women focused organizations and associations far in advance of solicitation due date (no less than 10 business days);

4. Identified and designated portions of the work to be performed by MWSBEs to increase the likelihood of meeting the Contract Goals (including where appropriate breaking down the contract into reasonably sized subcontracts to ensure participation);

5. Advertised subcontracting opportunities in news media focused towards minority and women persons far in advance of solicitation due date;

6. Provided MWSBEs with a point of contact that was knowledgeable about the project and possessed decision-making authority to answer questions from interested MWSBEs;

7. Provided a reasonable number of MWSBEs certified with timely written notices via email, mail, and/or fax and/or with documented contact regarding the subcontracting/supplier opportunities. A "reasonable number of MWSBEs" shall be based on the number of MWSBEs available in the directory;

8. Solicited the MWSBEs within a reasonable amount of time (no less than seven business days) before bid submission, as well as followed up with the MWSBEs solicited to determine if they were interested in submitting a bid or proposal or participating on a team.

9. Provided interested MWSBEs certified to perform the solicited work with prompt access to the plans, specifications, scope of work and requirements of the contract;

10. Negotiated in good faith with interested MWSBEs, and not rejecting MWSBEs as unqualified without sound reasons based on a thorough investigation of their capabilities;

11. Entered into a formal contract, or signing enforceable letters of intent with MWSBEs;

12. Provided an explanation to any MWSBE whose bid or price quotation is rejected, unless another MWSBE is accepted for the same work, as follows:
    a. Where price competitiveness is not the reason for rejection, a written rejection notice including the reason for rejection will be sent to the rejected MWSBE firm;
    b. Where price competitiveness is the reason for rejection, a meeting must be held with the price-rejected MWSBE, if requested, to discuss the rejection;

13. Made efforts to assist interested MWSBEs in obtaining bonding, lines of credit, insurance required for the contract, and documenting MWSBE denied by bona fide surety agents;

14. Ensured that the conditions and requirements for subcontracts are commensurate with industry standards and would not cause an economic hardship on MWSBEs, such as unnecessary insurance or coupling bid bonds with retainage;

15. Incorporated efforts not attempted earlier or on previous bids that appear more likely to lead to attaining the Contract Goal. Past performance on similar contracts with similar scopes will also be taken in consideration when determining Good Faith Efforts. A bidder that continues to make same efforts without any significant change in the level of participation may not be making Good Faith Efforts.

**Post–Award.**

The contractor must sign the approved participation plan (Document 00470 or Document 00570) prior to starting work on the Project. A contractor should submit a request for deviation (Document 00572) from OBO if the contractor, having made Good Faith Efforts, reasonably believes that it will not achieve the Participation Plan Percentage documented in the approved participation plan. Unless OBO approves a deviation, a contractor must submit to OBO a Participation Summary (Document 00660) prior to City Council's consideration of any close-out, term extension, or change order. If participation is less than anticipated in the approved participation plan, the contractor must submit a Record of Good Faith Efforts (Document 00571) along with the Participation Summary. A contractor that fails to submit a deviation request and Good Faith Efforts documentation waives the right to appeal OBO decisions related to this Policy.

If the contractor is awarded the contract and fails to achieve the established Participation Plan Percentage, the contractor must demonstrate to OBO its efforts to meet the Participation Plan Percentage and failure to do so based on circumstances that the contractor could not reasonably control. In determining whether the contractor made Good Faith Efforts to ensure full participation and achievement of the Participation Plan Percentage, OBO shall consider the following factors:

1. Whether the contractor designated an MWSBE liaison officer to administer the Contractor's MWSBE programs and to be responsible for maintenance of records of Good Faith Efforts.

2. Whether the contractor furnished prompt MWSBE Utilization Reports in a timely and accurate manner through the online Contract Monitoring System or via hard copy.

3. Whether the contractor responded to efforts to resolve disputes with MWSBEs, and genuinely attempted to resolve these issues.

4. Whether the contractor disclosed payment discrepancies timely and within the monthly reporting period;

5. Whether the contractor complied with the participation plan, unless the contractor received a deviation from the OBO Director and whether upon approval, the contractor made Good Faith Efforts to replace a removed MWSBE with another certified firm;

6. Whether the contractor furnished prompt written responses to written inquiries from the Director or any employee of OBO regarding the MWSBE's performance or information germane to the MWSBE's certification;

7. Whether the contractor ensured that at all times during the performance of any contract or subcontract the MWSBE firm is engaging in a commercially useful function as that term is defined in Chapter 15 of the City of Houston Code of Ordinances;

8. Whether the contractor provided the OBO information, or other material, that was factually accurate and free of material misrepresentation; and

9. Whether the contractor furnished prompt responses to requests for information, books and records needed to verify compliance from the department administering the Contract, the City Attorney and the City Controller;

10. Whether the contractor attended all meetings and mediation hearings as requested by the Director or his/her designee; and

11. How the contractor may be affected by change orders, with consideration given to the size of the change orders.

**Change Orders.**

The requirement to make Good Faith Efforts to achieve the approved Participation Plan Percentage is applicable to change orders. Contractors should make Good Faith Efforts to ensure that the Participation Plan Percentage remains substantially the same after the issuance of change orders. If a contractor cannot maintain substantially the same level of participation provided in the latest approved Participation Plan (Document 00470 or Document 00570) due to a change order, the contractor shall submit to the OBO Director and Contracting Department a Document 00571 (Post-Award Record of Good Faith Efforts) and Document 00572 (Post-Award Plan Deviation Request) in a timely manner that does not cause disruption to the project. In addition to other relevant factors, in evaluating whether Good Faith Efforts were made by the contractor to meet the Participation Plan Percentage despite change orders, the OBO Director shall consider the contractor's efforts to timely and efficiently deliver the project.

END OF DOCUMENT

DOCUMENT 00812

WAGE SCALE FOR HEAVY CONSTRUCTION

1.01 Following 29 CFR 5.5 (a) (1) (v), use the rates listed on the Wage Determination Attachment for minimum wage and benefits for the labor classifications applicable to the Work.

1.02 These rates do not prohibit payment of more than the rates stated.

1.03 Apply rates in this Document 00812 to site work greater than five (5) feet from exterior wall of new building under construction or from exterior wall of existing building.

1.04 The Contractor shall submit the "Certificate from Contractor Appointing Officer or Employee to Supervise Payment of Employees" (Exhibit "A") to the Monitoring Authority listed in Document 00495 prior to final execution of the contract.

1.05 During the course of the work, Subcontractors shall submit the "Certificate from Subcontractor Appointing Officer or Employee to Supervise Payment of Employees" (Exhibit "B") to the Monitoring Authority listed in Document 00495.

1.06 Contractor and all subcontractors will submit payrolls electronically to the Department through the online reporting system unless told otherwise by the Office of Business Opportunity.

## EXHIBIT "A"

### CERTIFICATE FROM CONTRACTOR APPOINTING OFFICER OR EMPLOYEE TO SUPERVISE PAYMENT OF EMPLOYEES

Project Name _____

_____

_____

Project WBS#: _____ Date _____

(I) (We) hereby certify that (I am) (we are) the Prime Contractor for _____

_____
(specify type of job)

in connection with construction of the above-mentioned Project, and that (I) (we) have appointed _____, whose signature appears below, to supervise the payment of (my) (our) employees beginning _____, 20___; that he/she is in a position to have full knowledge of the facts set forth in the payroll documents and in the statement of compliance required by the Copeland Act and the City of Houston, which he/she is to execute with (my) (our) full authority and approval until such time as (I) (we) submit to the City of Houston a new certificate appointing some other person for the purposes hereinabove stated.

_____ Phone:_____
(Identifying Signature of Appointee)

Witness/Attest: _____
(Name of Firm or Corporation)

By: _____ By: _____
(Signature) (Signature)

_____ _____
(Title) (Title)

NOTE: This certificate must be executed by an authorized officer of a corporation or by a member of a partnership, and shall be executed prior to and be submitted with the first payroll. Should the appointee be changed, a new certificate must accompany the first payroll for which the new appointee executes a statement of compliance required by the Copeland Act and the City of Houston.

## EXHIBIT "B"

CERTIFICATE FROM SUBCONTRACTOR APPOINTING OFFICER OR EMPLOYEE TO SUPERVISE PAYMENT OF EMPLOYEES

Project Name _____

_____

_____

Project WBS#: _____ Date _____

(I) (We) hereby certify that (I am) (we are) the Subcontractor for _____

_____
(specify type of job)

in connection with construction of the above-mentioned Project, and that (I) (we) have appointed _____, whose signature appears below, to supervise the payment of (my) (our) employees beginning _____, 20___; that he/she is in a position to have full knowledge of the facts set forth in the payroll documents and in the statement of compliance required by the Copeland Act and the City of Houston, which he/she is to execute with (my) (our) full authority and approval until such time as (I) (we) submit to the City of Houston a new certificate appointing some other person for the purposes hereinabove stated.

_____ Phone: _____
(Identifying Signature of Appointee)

Witness/Attest: _____
(Name of Firm or Corporation)

By: _____ By: _____
(Signature) (Signature)

_____ _____
(Title) (Title)

NOTE: This certificate must be executed by an authorized officer of a corporation or by a member of a partnership, and shall be executed prior to and be submitted with the first payroll. Should the appointee be changed, a new certificate must accompany the first payroll for which the new appointee executes a statement of compliance required by the Copeland Act and the City of Houston.

Projected Wage Determination Publication Date:
**July 26, 2013**
for
General Decision Number **TX130042 07/26/2013 TX42**
Superseded General Decision Number TX20120042

State: TEXAS
Construction Type: HEAVY
County (ies): Harris

HEAVY CONSTRUCTION PROJECTS including work on water and sewer lines. (Does not include flood control.)

| Modification Number: | Publication Date: |
|---|---|
| 0 | 01/04/2013 |
| 1 | 03/29/2013 |
| 2 | 07/26/2013 |

WAGE DETERMINATION ATTACHMENT:

END OF DOCUMENT

**Document 00820**

# WAGE SCALE AND PAYROLL REQUIREMENTS FOR ENGINEERING CONSTRUCTION

## Wage Scale Requirements

1.1 Contractor and its Subcontractors must pay the general prevailing wage rates for building construction for each craft or type of worker or mechanic employed in the execution of any building construction or repair under the Contract in accordance with Chapter 2258 of the Texas Government Code and City of Houston, Texas Ordinance Nos. 85-2070, 2000-1114, 2001-152, 2006-91 and 2006-168, and 2009-247 all as amended from time to time. City Council has determined the prevailing wage rate in the locality in which the work is being performed, which is set forth in Exhibit "A".

1.2 This prevailing wage rate does not prohibit the payment of more than the rates stated.

1.3 In bidding, Contractor warrants and represents that it has carefully examined the classifications for each craft or type of worker needed to execute the Contract and determined that such classifications in Exhibit "A" include all necessary categories to perform the work under the Contract.

1.4 The wage scale for engineering construction is to be applied to all site work greater than 5 feet from an exterior wall of new building under construction or from an exterior wall of an existing building.

1.5 If Contractor believes that an additional classification for a particular craft or type of worker is necessary to perform work under the Contract, it must submit with its bid a request to the Contract Compliance Division of the Mayor's Office Of Business Opportunity ("OBO") to use an additional labor classification not listed in Exhibit "A" and specify the proposed new classification. OBO shall determine whether a proposed classification is already covered in Exhibit "A", and, if it is, specify which classification is appropriate. OBO's decision is conclusive. If OBO decides that a new classification is necessary, it will determine the appropriate prevailing wage rate for any resurveyed, amended, new, or additional craft or type of worker not covered by Exhibit "A". Such determination must be decided in accordance with procedures established by OBO, and in compliance with Chapter 2258 of the Texas Government Code and City of Houston, Texas Ordinance Nos. 85-2070, 2000-1114, 2001-152, 2006-91, 2006-168 and 2009-247 subject to City Council approval.

1.6 Contractor must not use any labor classification not covered by Exhibit "A" until such classification is established and approved for use by OBO.

1.7 A Contractor or Subcontractor who violates Chapter 2258 of the Texas Government Code must pay to the City, $60 per each worker employed for each calendar day or part of the day that the worker is paid less than the wage rates set forth in Exhibit "A".

1.8 The City may withhold money required to be withheld under Chapter 2258 of the Texas Government Code from the final payment to Contractor or earlier payments if City Council makes a determination that there is good cause to believe that Contractor has not complied with these provisions and Chapter 2258 of the Government Code, in which case the City may withhold the money at any time subsequent to the finding by City Council.

1.9 Contractor and Subcontractors must keep records specifying:

(1) the name and classification of each worker employed under the Contract; and

(2) the actual per diem wages paid to each worker, and the applicable hourly rate.

The records must be open at all reasonable hours for inspection by the officers and agents of the City.

1.10 The hourly cost of salary for non-exempt workers for labor in excess of 40 hours per worker per week, shall be calculated at 1.5 times the worker's base pay, plus 1.0 times fringe benefits, for the applicable craft and level.

## Certified Payroll Requirements

2.1 Employees are paid weekly and payrolls are submitted weekly using the City of Houston's electronic payroll submission module, unless the prime Contractor has been instructed to do otherwise by the Office of Business Opportunity. When no work is done after a Contractor has started work, the Contractor is required to submit weekly compliance statement with no work performed. The payrolls must reflect the exact work and classification of the workers, the exact amount that they were paid. Workers must be paid the contracted amount (prevailing wage rates.) The Contractor will be penalized $60.00 a day for each employee who is underpaid per Texas Government Code 2258-023_for all contracts except Federally Funded Contract.

2.2 Payrolls must clearly indicate whether the worker worked inside or outside the building area.

2.3 Payrolls must be numbered and clearly marked: the first payroll as No. 1; etc. Payroll for the final week worked on the job should be marked "FINAL".

2.4 Payrolls must have "Week Ending" dates.

2.5 Payrolls must have employees' names, addresses, last four digits of the social security numbers, and job classifications. The job classifications must be the same as the classifications on the prevailing wage rate schedule.

2.6 A payroll deduction authorization form must be submitted for each employee for any deductions other than Federal and FICA taxes.

2.7 Employees must be paid overtime (time and a half) for all hours worked over 40 hours a week on both federally and City-funded contracts.

2.8 The Contractor has the responsibility to comply with all Internal Revenue Service rules and regulations. Contractors who submit certified payrolls with owner operators (truckers) must submit a signed tax liability statement from each worker acknowledging the worker's responsibility for payment of Federal Income Tax and FICA.

2.9 If the Contractor wants to use the apprentice wage rates for an employee, the apprenticeship certificates must be submitted to the Office of Business Opportunity in advance of the employee working on the project and appearing on the payroll.

2.10 A poster of the Prevailing Wage Rate Schedule should be clearly displayed on each job site, or in case of annual service agreements, in the Contractor's office.

2.11 The Contractor shall submit the "Certificate from Contractor Appointing Officer or Employee to Supervise Payment of Employees" (Exhibit "B") to the Monitoring Authority listed in Document 00495 prior to final execution of the contract.

2.12 During the course of the work, ALL Subcontractors shall submit the "Certificate from Subcontractor Appointing Officer or Employee to Supervise Payment of Employees" (Exhibit "C") to the Monitoring Authority listed in Document 00495.

2.13 Upon completion of the Project, as part of the contract-awarding department's total clearance process, the Office of Business Opportunity's Contract Compliance Section must review whether the Wage Rate and Payroll Requirements were met and report the results to the department.

REST OF PAGE INTENTIONALLY LEFT BLANK

# EXHIBIT "A"

LABOR CLASSIFICATIONS AND PREVAILING WAGE RATES
FOR
ENGINEERING CONSTRUCTION
2014

| CLASSIFICATION | RATE | CLASSIFICATION | RATE |
|---|---|---|---|
| Asphalt Distributor Operator | $14.06 | Milling Machine Operator - Fine Grade | $13.53 |
| Asphalt Paving Machine Operator | $14.32 | Mixer Operator | $10.33 |
| Asphalt Raker | $12.36 | Motor Grader Operator- Rough | $14.23 |
| Asphalt. Shoveler | $11.68 | Motor Grader Operator | $15.69 |
| Broom or Sweeper Operator | $12.68 | Oiler | $12.12 |
| Bulldozer Operator | $11.81 | Painter-Structures | $18.62 |
| Carpenter- Rough | $12.49 | Pavement Marking Machine Operator | $11.18 |
| Concrete Finisher- Paving | $12.98 | Pile Driverman. | $14.95 |
| Concrete Finisher- Structures | $12.98 | Pipe Layer | $12.12 |
| Concrete Paving Curbing Machine Operator | $11.71 | Reinforcing Steel Setter - Paving | $15.15 |
| Concrete Paving Finishing Machine Operator | $13.07 | Reinforcing Steel Setter - Structure | $14.39 |
| Concrete Paving Joint Sealer Operator | $11.00 | Roller Operator, Pneumatic - Self-propelled | $11.57 |
| Concrete Paving. Saw Operator | $13.99 | Roller Operator, Steel Wheel, Flat Wheel/Tamping | $11.57 |
| Concrete Paving Spreader Operator. | $10.44 | Roller Operator, Steel Wheel, Plant Mix Pavement | $11.92 |
| Concrete Rubber . . . | $9.00 | Scraper Operator | $13.47 |
| Crane Clamshell Backhoe Derrick, Dragline, Shovel Operator | $12.71 | Servicer | $13.97 |
| Crusher and Screening Plant Operator | $11.29 | Sign Installer - PGM | $8.54 |
| Electrician * 3 Journeyman 2 Apprentice | $27.11 | Slip Form Machine Operator | $11.07 |
| Flagger | $10.33 | Spreader Box Operator | $13.58 |
| Form Builder/Setter- Structures | $12.23 | Structural Steel Worker | $14.39 |
| Form Liner- Paving and Curb | $12.34 | Tractor Operator - Crawler Type | $13.68 |
| Form Setter- Paving and Curb | $12.34 | Tractor Operator- Pneumatic | $10.07 |
| Foundation Drill Operator - Crawler Mounted | $17.43 | Transit Mixer Truck Driver | $11.00 |
| Foundation Drill Operator - Truck Mounted | $15.89 | Truck Driver, Lowboy-float | $16.03 |
| Front Loader Operator | $13.32 | Truck Driver, Single-Axle - Heavy | $11.46 |
| Laborer Common | $11.02 | Truck Driver, Single-Axle - Light | $11.48 |
| Laborer- Utility | $11.73 | Truck Driver, Tandem Axle Semi-Trailer | $12.27 |
| Manhole Builder | $9.00 | Work Zone Barricade Servicer | $11.67 |
| Mechanic | $16.96 | Welders - Receive rate prescribed for craft performing operation to which welding is incidental | |
| * Apprentices- must be in an approved USDOL Program and cannot exceed ratios | | | |

## Engineering Prevailing Wages
## Classification Definitions

**Asphalt Distributor Operator**
Drives distributor truck, sets spray bars and operates valves and levers to control distribution of bituminous material for highway surfacing. May oil, grease or otherwise service and make adjustments to equipment as needed. Performs other related duties.

**Asphalt Paving Machine Operator**
Operates paving machine that spreads and levels asphaltic concrete on highway subgrade. Controls movement of machine, raises and lowers screed, regulates width of screed. May, oil, grease, service and make adjustments to equipment as needed. Performs other related duties.

**Asphalt Raker**
Distributes asphaltic materials evenly over road surface by raking and brushing material to correct thickness; directs Laborers when to add or take away material to fill low spots or to reduce high spots. Performs other related duties.

**Asphalt Shoveler**
A general term used on construction work covering many unskilled classifications requiring work of a physical nature. A laborer works with all crews doing everything from pick and shovel work to cleaning up lumber with hammer, shoveling and placing concrete, uses air tools, cleans concrete joints and fills joints with sealing compound from bucket or with hose and nozzle from a central source, applies coating of oil to inside face of forms, may help set and strip forms, unloads and transports reinforcing steel, cures newly poured concrete, helps lower pipe into ditch for pipelayers, builds fences, works with dirt crew keeping construction layout stakes out of the way of dirt moving equipment.

**Broom or Sweeper Operator**
Operates a self-propelled machine to sweep and clean roadway surfaces. May oil grease, service and make adjustments to equipment as needed. Performs other related duties.

**Bulldozer Operator**
Operates a crawler tractor with a bulldozer mounted in front of chassis to level, distribute and push earth or other material. May operate a ripper attachment to break up rock or other hard material. May use a push block on front of tractor to push load scrapers. May oil grease, or otherwise service and make minor repairs to equipment as needed. Performs other related duties.

**Carpenter, Rough**
Works from plans to build, assemble, fit together, align, plum, and set in place forms for molding concrete structures. Forms may be wood, steel, aluminum, fiberglass or any other type of material. Checks form while concrete is placed. May install miscellaneous materials integral to concrete structures. May set precast concrete elements. Prepares for slipforming traffic rail and median barrier. May install permanent metal deck forms. May work with power tools Performs other related duties.

**Concrete Finisher, Paving**
Finishes the exposed surfaces of fresh concrete paving, median barrier and every element of concrete structures to the final grade and contour structures to the final grade and contour with the use of straight edges and steel trowels. Operates bridge deck finishing machine. Finishes concrete curbs and gutters. Finishes exposed surface of concrete after forms have been removed by patching imperfections with fresh concrete, rubbing surface with abrasive stone, and directing others in removing excess or defective concrete with power tools. Performs other related duties.

**Concrete Finisher, Structures**
A worker semi-skilled in concrete finishing who assists Concrete finisher by performing specific or general duties of lesser skill and keeping Concrete Finisher supplied with materials, tools, and supplies; cleaning working area an equipment; and holding materials and tools. Performs other related duties.

**Concrete Paving Curbing Machine Operator**
Operates self - propelled machine(s) which may or may not travel on concrete paving forms, spreading and leveling fresh concrete to grade by use of augers and screeds. May oil, grease or otherwise service and make adjustments to equipment as necessary. Performs other related duties.

**Concrete Paving Finishing Machine Operator**
Operates self - propelled machine(s) which may or may not travel on concrete paving forms, spreading and leveling fresh concrete to grade by use of augers and screeds. May oil, grease or otherwise service and make adjustments to equipment as necessary. Performs other related duties.

**Concrete Paving Joint Sealer Operator**
Cleans and seals joints requiring a hot or cold sealing compound in concrete paving, sidewalks, driveway and approach slabs. May oil, grease or make necessary repairs adjustments to equipment as needed. Performs other related duties.

**Concrete Paving Saw Operator**
Operates a water-cooled power saw with either or an abrasive blade to saw expansion and contraction joints in concrete paving. May also be used to saw asphaltic pavements. May oil grease or otherwise service and make necessary adjustments to equipment as needed. Performs other related duties.

**Concrete Paving Spreader Operator**
Operates self - propelled machine(s) which may or may not travel on concrete paving forms, spreading and leveling fresh concrete to grade by use of augers and screeds. May oil, grease or otherwise service and make adjustments to equipment as necessary. Performs other related duties.

**Concrete Rubber**
Finishes the exposed surface of concrete masonry after the forms have been removed by patching holes and broken corners with fresh concrete, rubbing surface with abrasive stone to remove rough spots, and removing high spots and defective concrete with hand chisel and hammer or pneumatic chisel and powered abrasive stone. Performs other related duties.

**Crane, Clamshell, Backhoe, Derrick, Dragline, Shovel Operator**
A worker who operates a lattice boom type crane can hoist and move materials, raise and lower heavy weights and perform other related operations. May be crawler type or rubber tired. May include placement of rock riprap, clamshell, dragline, pipe and pile driving operations. May oil, grease or otherwise service and make necessary adjustments to equipment as needed. Performs other related duties.

**Crusher and Screed Plant Operator**
Operates a crusher or screening plant through which rock is run to break it into crushed stone for construction or to control flow of materials not needed. May include minor repairs and may service and make necessary adjustments to equipment as needed. Performs other related duties.

**Electrician *3 Journeyman 2 Apprentice**
Plans and directs the layout of metal electrical conduit, installs wiring systems, switch-panels, buss bars, works on overhead distribution systems and underground distribution systems. Performs other related duties.

**Flagger**
A worker who directs traffic in or around a construction site. May use signs or devices to direct traffic. May help assemble, position and clean devices or equipment used to direct traffic. Must be able to effectively communicate with the public. May require certain level of training by TXDOT specifications. Performs other related duties.

**Form Builder/Setter, Structures**
Fits together, aligns and sets to grade metal and wooden forms for placement of concrete. Forms may be wood, steel, aluminum, fiberglass or any other type of material. Checks forms while concrete is placed. May install miscellaneous materials integral to concrete structures. May set precast concrete elements. Prepares for slipforming traffic rail and median barrier. May install permanent metal deck forms. May work with power tools. Performs other related duties.

**Form Liner, Paving & Curb**
Fits together, panels align and sets to grade metal and wooden forms for placement of concrete. Works with survey crew to set stringline for panels or moles. Performs other related duties.

**Form Setter, Paving & Curb**
Fits together, align and set to grade metal and wooden forms for placement of concrete paving and curbs. Works with survey crew to set stringline for paving, curb and gutter curb. Performs other related duties.

**Foundation Drill Operator, Crawler Mounted**
Operates a hole-drilling machine that is crawler mounted. May include geotechnical operations such as soils nails, rock nails, tiebacks, anchors and jet grouting. May oil, grease or otherwise service and make necessary adjustments to equipment as needed. Performs other related duties.

**Foundation Drill Operator, Truck Mounted**
Operates a hole drilling machine that is mounted on the rear of a rubber tired vehicle or truck. May include soils nails, rock nails, tiebacks, anchors and jet grouting. Drive truck from location to location or may have laborer who drives truck. May oil, grease or otherwise service and make necessary adjustments to equipment as needed. Performs other related duties.

**Front End Loader Operator**
Operates a rubber tired, skid steer or crawler type tractor with an attached scoop type bucket on front end. Machine is used to load materials from stockpiles, excavation, charging batch plants, loading and unloading trucks. May be used with attachments in lieu of the bucket. May oil, grease or otherwise service and make necessary adjustments to equipment as needed. Performs other related duties.

**Laborer, Common**
A general term used on construction work covering many unskilled classifications requiring work of a physical nature. A laborer works with all crews doing everything from pick and shovel work to cleaning up lumber with hammer, shoveling and placing concrete, uses air tools, cleans concrete joints and fills joints with sealing compound from bucket or with hose and nozzle from a central source, applies coating of oil to inside face of forms, may help set and strip forms, unloads and transports reinforcing steel, cures newly poured concrete, helps lower pipe into ditch for pipelayers, builds fences, works with dirt crew keeping construction layout stakes out of the way of dirt moving equipment.

**Laborer, Utility**
Performs a variety of manual duties, usually working in a utility capacity by working on multiple projects and tasks where demands require workmen with varied experience and ability to work without close direction. Unloads and transports reinforcing steel. May occasionally place and tie reinforcing steel. Directs common laborers in pouring concrete. Erects shoring and bracing. Assists in installation of pipe. Installs, operate and maintains dewatering systems. May assist equipment operators in positioning machines, verifying grades and signaling operators. Directs truck drivers and scraper operators to dumping positions to maintain grades as directed. Uses power tools and air tools. May work as lead man in a labor crew. His performance of a wide variety of construction jobs distinguishes him from a helper assigned to a specific craft. Installs and maintains erosion control. I s more or less a general utility construction worker. May be second step in learning a skill, and may later become a helper in a specific classification. Performs other related duties.

**Manhole Builder**
Constructs a means of permanent access to water and sewer lines for maintenance purposes. This work consists of laying brick or concrete slab at bottom of ditch up to an approximate grade line near the surface of the ground. Brick or block is normally laid to form a nearly circular manhole. Brick or block is laid in by eyesight and is normally to a plumb line. Chipped or culled brick can be used quite often is. No effort may be made to keep mortar off the face of the brick and joints are not pointed. May apply coating of concrete to interior and exterior surface. Performs other related duties.

**Mechanic**
Assembles, set up, adjusts and maintains and repairs all types of construction equipment and trucks. He may perform the duties of a welder in repair of equipment. Performs other related duties.

**Milling Machine Operator, Fine Grade**
Operates a power-driven milling machine that planes material of the roadbed and discharges the material into a hauling unit or a windrow. May oil, grease or otherwise service and make necessary adjustments to equipment as needed. Performs other related duties.

**Mixer Operator**
Performs a variety of manual duties, usually working in a utility capacity by working on multiple projects and tasks where demands require workmen with varied experience and ability to work without close direction. Unloads and transports reinforcing steel. May occasionally place and tie reinforcing steel. Directs common

laborers in pouring concrete. Erects shoring and bracing. Assists in installation of pipe. Installs, operate and maintains dewatering systems. May assist equipment operators in positioning machines, verifying grades and signaling operators. Directs truck drivers and scraper operators to dumping positions to maintain grades as directed. Uses power tools and air tools. May work as lead man in a labor crew. His performance of a wide variety of construction jobs distinguishes him from a helper assigned to a specific craft. Installs and maintains erosion control. Is more or less a general utility construction worker. May be second step in learning a skill, and may later become a helper in a specific classification. Performs other related duties.

**Motor Grader Operator, Rough**
Operates a motor grader. Equipment is used to grade excavation and embankment and to lay asphalt, base and other materials. May blade haul roads and do other general motor grader work, but does not perform finish grade work to close specification tolerances. This operator may be a learner in the first phase of learning the skills of motor grader work. May oil, grease or otherwise service and make necessary adjustments to equipment as needed. Performs other related duties.

**Motor Grader Operator**
Operates a motor grader. Equipment is used to grade excavation and embankment and to lay asphalt, base and other materials. May blade haul roads and do other general motor grader work, but does not perform finish grade work to close specification tolerances. This operator may be a learner in the first phase of learning the skills of motor grader work. May oil, grease or otherwise service and make necessary adjustments to equipment as needed. Performs other related duties.

**Oiler**
A learner or semi-skilled worker who under the direction of the watch engineer May oil and grease or otherwise service all engines and necessary equipment as needed. He may clean and paint engine room as needed. Performs other related duties.

**Painter, Structures**
Paints and stains structural steel and concrete surfaces of bridges, retaining walls, or other structures. Directs cleaning and abrasive blasting of surfaces prior to painting or staining. Performs other related duties.

**Pavement Marking Machine Operator**
Operates machine used in laying paint stripes or markers on all types of paving. Loads machine with appropriate materials and may walk or ride on machine. May oil, grease or otherwise service and make necessary adjustments to equipment as needed. Performs other related duties.

**Piledriverman**
Sets in place, aligns, plumbs directs driving of timber, concrete, steel, pipe and any other type of piling. Sets, drives and pulls steel, concrete and other types of sheet piling. Rigs pile and leads and bracing. Signals operator. Splices piles before and after driving. Directs pile cutoff. May direct jetting or drilling equipment in connection with installing piles to grade. Performs other related duties.

**Pipelayer**
Installs concrete, clay, steel, ductile iron, plastic, corrugated pipe and any other type of pipe for storm drainage, water lines, gas lines and sanitary sewer lines. Lays underground communication and electrical ducts. May install and set electrical ground boxes, hand holes, manholes, inlets and other structures. Caulks joints, make threaded and flanged connections. Installs valves and other accessories. Performs other related duties.

**Reinforcing Steel Setter, Paving**
Works from plans to lay out and install reinforcing steel within forms or in mats of concrete paving. May direct unloading of material. Determines rigging required to complete work. Gives direction to reinforcing steel worker (helper) or common or utility laborers. May install miscellaneous materials integral to concrete structure or paving. May work with power tools. Performs other related duties.

**Reinforcing Steel Setter,Structure**
Works from plans to lay out and install reinforcing steel within forms or in mats of concrete paving. May direct unloading of material. Determines rigging required to complete work. Gives direction to reinforcing steel worker (helper) or common or utility laborers. May install miscellaneous materials integral to concrete structure or paving. May work with power tools. Performs other related duties.

**Roller Operator, Pneumatic, Self-Propelled**
Operates a self-propelled machine with either steel wheels pneumatic tires, which is used to compact and smooth all bituminous materials. May oil, grease or otherwise service and make necessary adjustments to equipment as needed. Performs other related duties.

**Roller Operator, Steel Wheel, Flat Wheel/Tamping**
Operates a self-propelled machine with either steel wheels or pneumatic tires which is used to compact earth fills, subgrade, flexible base and all other types of materials except bituminous. May oil, grease or otherwise service and make necessary adjustments to equipment as needed. Performs other related duties.

**Roller Operator, Steel Wheel, Plant Mix Pavement**
Operates a self-propelled machine with either steel wheels pneumatic tires, which is used to compact and smooth all bituminous materials. May oil, grease or otherwise service and make necessary adjustments to equipment as needed. Performs other related duties.

**Scraper Operator**
Operates a self-contained wheeled tractor scraper both self loading or assisted by crawler tractors or other scrapers. Used to excavate and transport earth or other materials. May oil, grease or otherwise service and make necessary adjustments to equipment as needed. Performs other related duties.

**Servicer**
Drives a truck, which carries various fuels, oils, greases and filters. Must have knowledge of and is responsible for the correct oiling and greasing and changing of filters on equipment according to the manufacturers' specifications. Uses compressed air grease guns, wrenches and other tools. May make adjustments to clutches, brakes and other mechanical items. Keeps record of service preventive maintenance records. May have laborer assisting him. May require CDL if driving truck on public highways. Performs other related duties.

**Sign Installer (PGM)**
Sets forms, reinforcing steel, anchor bolts and pours concrete for Sign foundations. Fabricates and erects pipe and angle Frameworks by bolting, welding or other means prior to installation of signs that are normally prefabricated. Works from plans in location and drilling holes for proper location and alignment of signs. May direct hoisting of signs into place. Fastens signs to framework by bolting and other means. Locates and sets lighting brackets. May perform other work associated with signing projects. Supervises sign erector helper. Performs other related duties.

**Slip Form Machine Operator**
Cleans and seals joints requiring a hot or cold sealing compound in concrete paving, sidewalks, driveway and approach slabs. May oil, grease or make necessary repairs adjustments to equipment as needed. Performs other related duties.

**Spreader Box operator**
Operates spreader box by adjusting hopper and strike off blade so that the gravel, stone or other material may be spread to a specific depth on road surface during seal coat and surface treatment operations. May oil, grease or otherwise service and make necessary adjustments to equipment as needed. Performs other related duties.

**Structural Steel Worker**
Works from plans to lay out and install reinforcing steel within forms or in mats of concrete paving. May direct unloading of material. Determines rigging required to complete work. Gives direction to reinforcing steel worker (helper) or common or utility laborers. May install miscellaneous materials integral to concrete structure or paving. May work with power tools. Performs other related duties.

**Tractor operator, Crawler Type**
Operates a crawler tractor with a bulldozer mounted in front of chassis to level, distribute and push earth or other material. May operate a ripper attachment to break up rock or other hard material. May use a push block on front of tractor to push load scrapers. May oil grease, or otherwise service and make minor repairs to equipment as needed. Performs other related duties.

**Tractor Operator, Pneumatic**
Operates a gasoline or diesel powered agricultural tractor that tows compaction rollers, plow, disc. water tanks, scrapers and other similar operations. May use other miscellaneous attachments. May oil, grease or otherwise service and make necessary adjustments to equipment as needed. Performs other related duties.

**Traveling Mixer Operator**
Drives a gasoline or diesel truck upon which is mounted a concrete mixer. Operates concrete mixer and dumps concrete on the grade, into forms or into concrete pumps or buckets. Cleans mixer drum. May require CDL license for on highway use. May service and make necessary adjustments for proper operation of equipment. Performs other related duties.

**Truck driver, lowboy-Float**
Drives a heavy-duty diesel powered truck to which is attached a trailer upon which heavy equipment is hauled. Driver is often required to operate heavy equipment to load or unload the lowboy. May require CDL license for on highway use. May service and make necessary adjustments for proper operation of equipment. Performs other related duties.

**Truck driver, Single Axle, Heavy**
Drive a light capacity truck for transporting loads of construction material. The truck is of single rear axle type, may have various kinds of beds attached, such as dump, flat bed, tank, etc. May require CDL license for driving on highway. May services and make necessary adjustments for proper operation equipment. Performs other related duties.

**Truck driver, Single Axle-Light**
Drive a light capacity truck for transporting loads of construction material. The truck is of single rear axle type, may have various kinds of beds attached, such as dump, flat bed, tank, etc. May require CDL license for driving on highway. May service and make necessary adjustments for proper operation equipment. Performs other related duties.

**Truck Driver, Tandem Axle, Semi-Trailer**
Drives a diesel-powered tractor pulling a semi trailer hauling materials. Hauls dirt, rock, aggregates or other material. May require CDL license for driving on highway. May service and make necessary adjustments for proper operation of equipment. Performs other related duties.

**Work Zone Barricade Servicer**
Fabricates, erects and maintains temporary traffic control devices, including arrow boards, signs, barricades, channelizing devices, barrels and all message boards. May operate a truck during traffic control operations.

**WELDERS** - Receives rate for craft being performed to which welding is incidental.

## EXHIBIT "B"

### CERTIFICATE FROM CONTRACTOR APPOINTING OFFICER OR EMPLOYEE TO SUPERVISE PAYMENT OF EMPLOYEES

Project Name _____

_____

Project WBS#: _____ Date _____

(I) (We) hereby certify that (I am) (we are) the **Prime Contractor** for _____

_____
(specify type of job)

in connection with construction of the above-mentioned Project, and that (I) (we) have appointed_____, whose signature appears below, to supervise the payment of (my) (our) employees beginning_____, 20___; that he/she is in a position to have full knowledge of the facts set forth in the payroll documents and in the statement of compliance required by the Copeland Act and the City of Houston, which he/she is to execute with (my) (our) full authority and approval until such time as (I) (we) submit to the City of Houston a new certificate appointing some other person for the purposes hereinabove stated.

_____ _____
(Identifying Signature of Appointee) Phone:

Witness/Attest:

_____
(Name of Firm or Corporation)

By:_____ By:_____
(Signature) (Signature)

_____ _____
(Title) (Title)

NOTE: This certificate must be executed by an authorized officer of a corporation or by a member of a partnership, and shall be executed prior to and be submitted with the first payroll. Should the appointee be changed, a new certificate must accompany the first payroll for which the new appointee executes a statement of compliance required by the Copeland Act and the City of Houston.

## EXHIBIT "C"

CERTIFICATE FROM SUBCONTRACTOR APPOINTING OFFICER OR EMPLOYEE TO SUPERVISE PAYMENT OF EMPLOYEES

Project Name _____

_____

Project WBS#: _____ Date _____

(I) (We) hereby certify that (I am) (we are) the **Sub-Contractor** for _____

_____
(specify type of job)

in connection with construction of the above-mentioned Project, and that (I) (we) have appointed_____, whose signature appears below, to supervise the payment of (my) (our) employees beginning_____, 20___; that he/she is in a position to have full knowledge of the facts set forth in the payroll documents and in the statement of compliance required by the Copeland Act and the City of Houston, which he/she is to execute with (my) (our) full authority and approval until such time as (I) (we) submit to the City of Houston a new certificate appointing some other person for the purposes hereinabove stated.

_____ _____
(Identifying Signature of Appointee) Phone:

Witness/Attest:

_____
(Name of Firm or Corporation)

By:_____ By:_____
(Signature) (Signature)

_____ _____
(Title) (Title)

NOTE: This certificate must be executed by an authorized officer of a corporation or by a member of a partnership, and shall be executed prior to and be submitted with the first payroll. Should the appointee be changed, a new certificate must accompany the first payroll for which the new appointee executes a statement of compliance required by the Copeland Act and the City of Houston.

END OF DOCUMENT

Document 00830

# TRENCH SAFETY GEOTECHNICAL INFORMATION

## 1.0 DOCUMENT INCLUDES

A. Trench Safety Geotechnical Information: Geotechnical information obtained for use in design of the trench safety system is included as an attachment to this document.

## 2.0 RELATED DOCUMENTS

A. Section 02260 - Trench Safety Systems.

END OF DOCUMENT

# City of Houston
# Pay or Play Program Requirements

## I. Pay or Play Program Overview

### A. Purpose

The Pay or Play Program was established with Ordinance 2007-534 on July 1, 2007 and is governed by Executive Order 1-7. The Pay or Play Program (POP Program) creates a more level playing field and enhances fairness in the bid process between competing contractors that choose to offer health benefits to their workforce and those who do not. The program also recognizes and accounts for the fact that there are cost associated with health care of the uninsured citizens of the Houston and Harris County area.

### B. Program Elements

**1. <u>Covered contracts</u>:**

I.) Advertised after July 1, 2007 or which is executed on or after the effective date of this Executive Order.
II.) Contracts valued at or above $100,000.00 (contract) and $200,000.00 (sub-contract) including contingencies, amendments, supplemental terms and/or change orders.
III.) Professional Service, Construction, and Service type contracts.

**2. <u>Contracts not covered</u>:**

I.) Any contract in which the primary purpose is procurement of property, goods, supplies, and or equipment.
II.) An inter-governmental contract, inter-governmental agreement or purchasing cooperative.

**3. <u>Covered employees</u>:** This program applies to employees of a covered contractor or subcontractor, including contract labor, who are over age 18, work at least 30 hours per week <u>and</u> work any amount of time under a covered city contract or subcontract.

**4. <u>Pay or Play Option</u>:**

I.) "Pays" by contributing $1.00 per covered employee per regular hour for work performed under the contract with the City; or
II.) "Plays" by providing health benefits to covered employees. Health benefits must meet or exceed the following standards:

- The **employer will contribute no less than $150 per covered employee per month** toward the total premium cost.
- The **employee contribution, if any amount, will be no greater than 50% of the monthly premium cost and no more than $150 per month.**

***Note: (1)A contractor is deemed to have complied with section 5.4 of E.O. 1-7 with respect to a covered employee who is not provided health benefits if the employee refuses the benefits and the employee's contribution to the premium is no more than $40 per month. (2) If applicable the contractor has the option to both Pay and Play.***

5. **Exemptions/Waivers:** The City of Houston will award a contract to a contractor that neither Pays nor Plays only if the contractor has received an approved waiver (Form POP-4 requested by City departments only).

6. **Administration**: Contractor performance in meeting Pay or Play program requirements will be managed by the contracting department. The Office of Business Opportunity (OBO) has administrative oversight of the program, including audit responsibilities (department compliance). Questions about the program should be referred to the Department POP Liaison an updated contact list is available on http://www.houstontx.gov/obo/popforms.html or call Gracie Orr with the Office of Business Opportunity at 832-393-0633.

## II. Documentation and Reporting Requirements

### A. Document that must be signed and returned to administering department with the bid/proposal.

1.) City of Houston Pay or Play Program Acknowledgment Form (Form POP-1) acknowledges bidder/proposers' knowledge of the program and its requirements, and the intention to comply.

### B. Documents that must be signed and returned to administering department within a period designated by the department's Contract Administrator, upon notification of low bidder or successful proposer status:

1.) Certification of Compliance with Pay or Play Program (Form POP-2)

***Note - Contractors that opt to "play" must provide proof of coverage, including document from insurance provider, and names of covered employees.***

2.) List of Subcontractors (Form POP-3)

***Note- Review the affidavit statement at the bottom of this form for further important POP Compliance information.***

### C. Contractors reporting requirements:

1.) Contractors that opt to Pay
Provide monthly reports to administering department, detailing names of employees, hours worked, exemptions (if any) and amount owed. (Form POP-5)

2.) Contractors that opt to Play
Provide periodic reports to the contract administrator showing proof of coverage (insurance premium invoice or insurance card) reporting schedule will be determined by administering department based on length of contract. (Form POP-7)

3.) Employee Waiver Request
Contractor may request POP program waiver by submitting the request on POP-8 if the employee is less than 18 years old, employee has other health coverage such as through spouse or parents, or Medicare/Medicaid.

***Note proof of coverage must be provided in the form of a copy of the employee's insurance card. (Remove social security numbers if applicable)***

4.) Contractors shall submit an initial report with the second invoice to the department. Payments based on monthly reports are due to the contracting department with submission of the following month's invoice. Payments may be made out to the City of Houston preferably via cashier check or business check.

## III. Compliance and Enforcement

The Office of Business Opportunity will audit program compliance. Contractors willfully violating or misrepresenting POP program compliance will be subject to corrective and/or punitive action, including but not limited to the assessment of fines and penalties and/or debarment. The Pay or Play Program Requirements Form and all other POP Forms are available for downloading from the City of Houston's Website at http://www.houstontx.gov/obo/popforms.html

Document 00910

ADDENDUM NO.________________________

Date of Addendum: ____________________
****Enter date by hand when signed for release****

PROJECT NAME: Buffalo Speedway Paving and Drainage: Holmes Road to West Airport

PROJECT NO: WBS No. N-000784-0001-4

BID DATE: January 22, 2015 (There is no change to the Bid Date.)

FROM: J. Timothy Lincoln, P.E., City Engineer
City of Houston, Department of Public Works and Engineering
611 Walker Street, Houston, Texas 77002
Houston, Texas 77002
Attn: *Stephen M. Campagna*, Project Manager

TO: Prospective Bidders

This Addendum forms a part of the Bidding Documents and will be incorporated into the Contract documents, as applicable. Insofar as the original Project Manual and Drawings are inconsistent, this Addendum governs.

************************************************************************

*Use the following heading and select the appropriate wording for postponement of the Bid Date. Delete the statement beside Bid Date above which indicates that the Bid Date is unchanged. If change in Bid Date, issue as separate addendum. Delete this section entirely if there is no change in Bid Date.*

************************************************************************

CHANGE IN BID DATE

The Bid Date for this Project has been changed from ____________ (Date) to ____________ (Date).

[Time of day and place for submittal of bid remains the same]. [Time of submittal has been changed from ____________ (Time) to ____________ (Time). The place for submittal remains the same].

The bid date for this project has been indefinitely postponed.

************************************************************************

*Delete the following paragraph if the sole purpose of the Addendum is to postpone the Bid Date.*
**********

*This Addendum uses the change page method: remove and replace or add pages, or Drawing sheets, as directed in the change instructions below. Change bars ( | ) are provided in the outside margins of pages from the Project Manual to indicate where changes have been made; no change bars are provided in added Sections. Reissued Drawing Sheets show the Addendum number below the title block and changes in the Drawing are noted by a revision mark and enclosed in a revision cloud.*

**********

*Number each item of the Addendum beginning with 1 through the total number of change items in the Addendum. Sample entries are provided in brackets.*
**********

CHANGES TO PREVIOUS ADDENDA

**********

*Reference Addendum Number and item number to correct clarifications or make minor corrections of changes issued by previous Addenda.*
**********

ADDENDUM NO. _____
[1. Item 5. Change to read as follows:]

CHANGES TO PROJECT MANUAL

**********

*Follow this format to sequence changes to the Project Manual.*
**********

BIDDING REQUIREMENTS

**********

*Give the individual change instructions for each item of change by Document number and title. List changes in order of Document number.*
**********

[2. Document 00020 - Notice to Bidders. Replace page 00020-2.]
CONTRACT FORMS
[3. Document 00610 - Replace revised Performance Bond, page 00610-1.]
CONDITIONS OF THE CONTRACT
[4. Document 00800 - Supplementary Conditions. Replace page 00800-4 and add page 00800-5.]

SPECIFICATIONS

[5. Section 02050 - Demolition. Add section including pages 02050-1 through 02050-3.]

CHANGES TO DRAWINGS

[6. Delete Sheet S-9, Beam Schedule, and replace with Sheet S-9-A.]

CLARIFICATIONS

[7. Document 00210 - Supplementary Instructions to Bidders states that no substitutions will be considered during the bidding phase. Substitutions will be considered during the first 15 percent of the Contract Time or first 90 days of the Contract, whichever is less, as stated in Document 00700 - General Conditions.]

END OF ADDENDUM NO. _____

DATED: _____

*Ravi Kaleyatodi, P.E., CPM*
Senior Assistant Director
*Department of Public Works and Engineering*

RK:JHK:SMC:sdd

END OF DOCUMENT

Document 00911

NOTICE OF
ADDENDUM NO.

Date of Addendum: _____

PROJECT NAME: Buffalo Speedway Paving and Drainage: Holmes Road to West Airport

PROJECT NO: N-000784-0001-4

BID DATE: _____ (There is no change to the Bid Date.)

FROM: J. Timothy Lincoln, P.E., City Engineer
City of Houston
Department of Public Works and Engineering
611 Walker, 15th Floor
Houston, Texas 77002
Attn: Stephen M. Campagna, Project Manager

TO: Prospective Bidders

The referenced Addendum forms a part of the Bidding Documents and will be incorporated into the Contract documents, as applicable.

Written questions regarding this Addendum may be submitted to the Project Manager following the procedures specified in Document 00200 – Instructions to Bidders. Immediately notify the City Engineer through the named Project Manager upon finding discrepancies or omissions in the Bid Documents.

_____
Ravi Kaleyatodi, P.E., CPM
Senior Assistant Director
Department of Public Works and Engineering

END OF DOCUMENT

Document 00931

# REQUEST FOR INFORMATION

1. PROJECT No.: N-000784-0001-4
2. RFI No.: _____
3. PROJECT NAME: Buffalo Speedway Paving and Drainage: Holmes Road to West Airport
4. CONTRACTOR: [Contractor Name]
5. CONTRACT No.: _____
6. SPECIFICATION Nos.: _____
7. DRAWING Nos.: _____
8. RESPONSE CODE: [_] CRITICAL [_] ROUTINE 9.DATE RESPONSE REQUIRED: _____
10. INFORMATION REQUIRED:

11. _____ _____
CONTRACTOR (Signature) TITLE DATE

12. RESPONSE:

13. _____ _____
PROJECT MANAGER (Signature) DATE

14. **If Contractor believes the response given in Item 12 requires an adjustment in Contract Price or Contract Time, Contractor shall submit a timely proposal so as not to delay Contractor's Work in accordance with General Conditions, Article 7 - Changes in the Work.**

END OF DOCUMENT

Section 01110

SUMMARY OF WORK

PART 1 GENERAL

1.01 SECTION INCLUDES

A. Summary of the Work including work by the City, City-furnished Products, work sequence, future work, Contractor use of Premises, special conditions for substantial completion and City occupancy.

B. The purpose of the project is to construct a major thoroughfare that will improve circulation, mobility and drainage in the service area. These improvements will upgrade existing roadway to Major Thoroughfare Freeway Plan (MTFP) standards.

1.02 WORK COVERED BY CONTRACT DOCUMENTS

A. Work of the Contract is for construction of pavement, storm sewer, detention ponds, and large diameter water line along or in the vicinity of proposed Buffalo Speedway.

B. Proposed pavement for Buffalo Speedway consists of a four-lane boulevard with 9-inch reinforced concrete pavement on a 9-inch stabilized subgrade. Proposed pavement for the Buffalo Speedway at-grade connector to Holmes Road consists of a four-lane undivided roadway.

C. Holmes Road widening is in the vicinity of the Buffalo Speedway at-grade intersection. The existing asphalt roadway shall be milled and widened with black base. Level-up course and final surface course overlays shall be applied to the full width of the proposed section.

D. The proposed storm sewer system consists of approximately 1400 LF of 24-inch storm sewer including inlet leads, 560 LF of 30-inch storm sewer, 2600 LF of 36-inch storm sewer, 1100 LF of 42-inch storm sewer, and 450 LF of 48-inch storm sewer. The proposed storm sewer also includes approximately 180 LF of 4-ft. x 3-ft. storm box, 300 LF of 5-ft. x 3-ft. storm box, 260 LF of 5-ft. x 4-ft. storm box, and 1800 LF of 6-ft. x 4-ft. storm box. All sewers are to be constructed by open-cut methods, except where noted on plans. Proposed storm sewer appurtenances include manholes, Type "E" inlets, Type "C" curb inlets and junction boxes.

E. Drainage work includes the excavation of a drainage swale in an easement adjacent to the west right-of-way line of Buffalo Speedway. The work also includes the excavation of four detention ponds between Buffalo Speedway and Harris County Flood Control Unit C161-00-00. One of the ponds includes approximately 250 LF of 10-ft. x 5-ft. storm box and 100 LF of 4-ft. x 2-ft. storm box culvert for a pipeline crossing. Outfalls for the ponds consist of approximately 1450 LF of 24-inch CMP, 260 LF of 48-inch CMP, 780 LF of 54-inch CMP, and 120 LF of 60-inch CMP, 60 LF of 66-inch CMP.

F. Proposed water line consists of a 24-inch ductile iron pipe with restrained joints, valves, fittings, fire hydrants with 6-inch branches, and wet connections to existing water lines. The proposed water line connects to an existing 16-inch water line south of Airport Boulevard. The proposed water line connects to an existing 24-inch water line at the intersection of Buffalo Speedway and Willowbend Road (approximately 1000 feet north of Holmes Road). The water line will be constructed by open-cut methods, except where noted on the plans. Trenchless construction will be used at petroleum pipeline

crossings and to cross Holmes Road and the Union Pacific Railroad.

G. Street lights conduit and pullboxes are included in the project.

H. Construct new 4½-inch thick concrete sidewalks, and wheelchairs ramps, that are compliant with the Americans with Disabilities Act (ADA) and the Texas Accessibility Standards (TAS).

I. Other components of the project include traffic control, permanent signage and striping, storm water pollution prevention measures, tree removal, and implementation of a Tree Protection Plan.

1.03 CASH ALLOWANCES

A. Include the following specific Cash Allowances in Contract Price under provision of General Conditions Paragraph 3.11:

1. Harris County Flood Control District (HCFCD) Permit Fee.... $1,000.00
2. Floodplain Development Permit Fee..... $1,000.00
3. Lane Closure Permit Fee..... $250.00
4. Street Cut Permit Fee..... $1,000.00
5. Union Pacific Boring and ROE Permits ..... $5,000.00
6. Union Pacific Flagman Fee .....$37,800.00
7. Street Lighting..... $26,570.00

B. Union Pacific Railroad (UPRR) – the contractor will be required to apply and receive all required UPRR permits from UPRR directly. The fees associated with these permits will be reimbursed to the contractor as a cash allowance.

1. The contractor is responsible for scheduling all UPRR Flagmen directly with UPRR, as required. Item 144 of Document 00410 includes the maximum reimbursement amount allowed for UPRR Flagmen.
2. It is the contractor's responsibility to schedule UPRR Flagmen such that the Cash Allowance amount is not exceeded, per the General Condition Document 00700, Article 3.11.2. Typically, UPRR Flagmen are billed on a per day basis (regardless of how many hours they are needed) and typically they can only be rescheduled approximately a week in advance.

1.04 ALTERNATES

A. From the following list of Alternates, amount included in Contract Price for only those Alternates accepted by the City and listed in the fully executed Document 00520 – Agreement, Paragraph 3.2:

Not Applicable

1.05 CITY-FURNISHED PRODUCTS

A. Items Furnished by the City for Installation and final connection by Contractor: None.

B. Contractor's Responsibilities: Contractor will supply all new construction materials.

1. Arrange and pay for Product delivery to the site.
2. Receive and unload Products at the site; jointly with the City, inspect for completeness or damage.
3. Handle, store, Install, and finish Products.
4. Repair or replace damaged items.

1.06 WORK SEQUENCE

A. There will be no Construction Phasing during the construction period.

B. For projects with no Phases, do not disturb more than 50% of total project linear feet of disturbed right-of-way and easement until site restored in accordance with Section 01740 – Site Restoration.

C. Coordination of the Work: Refer to Section 01312 - Coordination and Meetings.

1.07 CONTRACTOR USE OF PREMISES

A. Comply with procedures for access to the site and Contractor's use of rights-of-way as specified in Section 01145 - Use of Premises.

B. Construction Operations: Limited to the City's rights-of-way provided by the City and areas shown or described in the Contract documents.

C. Utility Outages and Shutdown: Provide a minimum of 48 hours notice to the City and private utility companies (when applicable), excluding weekends and holidays, in advance of required utility shutdown. Coordinate all work as required.

D. Private Utility Relocations: Pursuant to Section 40-395 of the City of Houston (City) Utility Relocation Ordinance Program (URO), and based upon the best information provided by the private facility owners, all required utility work has been completed.

1.08 STREET CUT ORDINANCE

A. Excavations on or under pavement in the City's right-of-way must have a permit. Comply with City of Houston, Texas Ordinance No. 2000-1115, an ordinance amending Chapter 40 of the Code of Ordinances, Houston, Texas, relating to excavating in the Public right-of-way.

B. Comply with the latest edition of street cut New Pavement Repair and Pavement Replacement details.

C. Quantities are included for street cut pavement repair and replacement in applicable Specification sections for Unit Price contracts.

D. Include payment for street cut pavement repair and replacement in lump sum bid for Stipulated Price contracts.

1.09 WARRANTY

A. Comply with warranty requirements in accordance with Document 00700 - General Conditions.

1.10 ADDITIONAL CONDITIONS FOR SUBSTANTIAL COMPLETION

A. In addition to requirements outlined in Document 00700 – General Conditions, for Contractor to be substantially complete with the Work and call for inspection by Project Manager to confirm, the following conditions must be met or completed:

1. All Safety related work including pavement stripping, signing and signalization:

   a. All safety-related systems and equipment shall be installed, accepted by manufacture's representative and approved for use.

2. All pay items complete report.

3. Contractor shall contact Construction Project Manager to complete Texas Department of Licensing and Regulation Post Construction Inspection of pedestrian elements for Texas Accessibility Standards.

B. No additional condition described in Paragraph 1.10 may be included in Contractor's punch list.

PART 2 P R O D U C T S - Not Used

PART 3 E X E C U T I O N - Not Used

END OF SECTION

Section 01145

# USE OF PREMISES

## 1.01 SECTION INCLUDES

A. General use of the site including properties inside and outside of rights-of-way, work affecting road, ramps, streets and driveways and notification to adjacent occupants.

## 1.02 RIGHTS-OF-WAY

A. Confine access, and operations and storage areas to rights-of-way provided by the City as stipulated in Document 00700 - General Conditions; trespassing on abutting lands or other lands in the area is not allowed.

B. Make arrangements, at no cost to the City, for temporary use of private properties. Contractor and Surety shall indemnify and hold harmless the City against claims or demands arising from such use of properties outside of rights-of-way. Submit a copy of agreements between private property owners and Contractor prior to use of the area. Agreements between private property owners and Contractor shall be notarized or bear the signatures of two witnesses.

C. Obtain written permission from City of Houston Parks and Recreation Department for storage of materials on esplanades and other areas within rights-of-way under that department's jurisdiction. Submit copies of written permission prior to use of the area.

D. Restrict total length of distributed materials along the route of construction to 1,000 linear feet unless otherwise approved in writing by City Engineer.

## 1.03 PROPERTIES OUTSIDE OF RIGHTS-OF-WAY

A. Do not alter the condition of properties adjacent to and along rights-of-way.

B. Do not use ways, means, methods, techniques, sequences, or procedures that result in damage to properties or improvements.

C. Restore damaged properties outside of rights-of-ways at no cost to the city

## 1.04 USE OF SITE

A. Obtain approvals from governing authorities prior to impeding or closing public roads and streets. Do not close more than two consecutive intersections at one time.

B. Notify Project Manager and Public Works and Engineering Traffic Management Branch at least five working days prior to closing a street or street crossing. Obtain permits for street closures in advance.

C. Maintain 10-foot-wide minimum access lanes for emergency vehicles including access to fire hydrants.

D. Avoid obstructing drainage ditches or inlets. When obstruction is unavoidable due to requirements of the Work, provide grading and temporary drainage structures to maintain unimpeded flow.

E. Locate and protect private lawn sprinkler systems that may exist within the site. Repair or replace damaged systems to condition existing at start of the Work, or better. Test irrigation system prior to construction.

F. Conform to daily clean-up requirements of Article 3 of Document 00700 - General Conditions.

G. Beware of overhead power lines existing in area and in close proximity of the Project. When 10 feet of clearance between energized overhead power line and construction-related activity cannot be maintained, request Center Point Energy (CPE) de-energize or move conflicting overhead power line. Contact CPE representatives at (713) 207-2222. Schedule, coordinate and pay costs associated with de-energizing or moving conflicting overhead power lines. When there is no separate pay item for this effort, include these costs in various items of bid that make such work necessary.

1.05 NOTIFICATION TO ADJACENT OCCUPANTS

A. Notify individual occupants in areas to be effected by the Work of proposed construction and time schedule. Notify not less than 72 hours or more than two weeks prior to work performed within 200 feet of homes or businesses. Follow form and content of sample door hanger provided by Project Manager.

B. Include in notification nature of the Work, and names and telephone numbers of two company representatives for resident contact available on 24-hour call.

C. Submit proposed notification to Project Manager for approval. Consider ethnicity of the neighborhood where English is not the dominant language. Provide notice in an understandable language.

1.06 PUBLIC, TEMPORARY, AND CONSTRUCTION ROADS AND RAMPS

A. Construct and maintain temporary detours, ramps, and roads to provide for normal public traffic flow when it is necessary to close public roads or streets.

B. Provide mats or other means to prevent overloading or damage to existing roadways from tracked equipment, large tandem axle trucks or equipment that will damage the existing roadway surfaces.

C. Construct and maintain access roads and parking areas as specified in Section 01504 - Temporary Facilities and Controls.

1.07 EXCAVATION IN STREETS AND DRIVEWAYS

A. Avoid hindering or inconveniencing public travel on streets or intersecting alleys for more than two blocks at any one time, except by permission of City Engineer.

B. Obtain Traffic Management Branch and City Engineer's approval when nature of the Work requires closure of an entire street. Permits required for street closure are Contractor's responsibility. Avoid unnecessary inconvenience to abutting property owners.

C. Remove surplus materials and debris and open each block for public use, as work in that block is complete.

D. Acceptance of any portion of the Work will not be based on return of street to public use.

E. Avoid obstructing driveways or entrances to private property.

F. Provide temporary crossings or complete excavation and backfill in one continuous operation to minimize duration of obstruction when excavation is required across drives or entrances.

G. Provide barricades and signs in accordance with Section VI of the State of Texas Manual on Uniform Traffic Control Devices.

1.08 TRAFFIC CONTROL

A. Comply with traffic regulation as specified in Section 01555 - Traffic Control and Regulation.

1.09 SURFACE RESTORATION

A. Restore the site including landscaping to the condition existing before construction, or better.

B. Repair paved areas per the requirements of Section 02951 - Pavement Repair and restoration.

C. Repair damaged turf areas, level with bank run sand conforming to Section 02317 - Excavation and Backfill for Utilities, or topsoil conforming to Section 02911 - Topsoil, and re-sod in accordance with Section 02922 - Sodding. Water and level newly sodded areas with adjoining turf using appropriate steel wheel rollers for sodding. Do not use spot sodding or sprigging.

1.10 LIMITS OF CONSTRUCTION

A. Confine operations to lands within construction work limits shown on Drawings. Unless otherwise noted on Drawings adhere to the following:

1. Where utility alignment is within esplanade, and construction limits are shown on Drawings to extend to edge of esplanade, keep equipment, materials, stockpiles a minimum of five feet from back of curb.

2. Where construction limits shown on Drawings extend to property line, keep sidewalks free of equipment, materials, and stockpiles.

1.11 EQUIPMENT AND MATERIAL SALVAGE

A. Upon completion of the Work, carefully remove salvageable equipment and material. Deliver them to City of Houston as directed by Project Manager. Dispose of equipment offsite at no additional cost to the City when Project Manager deems equipment unfit for further use.

PART 2 P R O D U C T S - Not Used

PART 3 E X E C U T I O N - Not Used

END OF SECTION

Section 01255

# CHANGE ORDER PROCEDURES

## PART 1 G E N E R A L

### 1.01 SECTION INCLUDES

A. Procedures for processing Change Orders, including:

1. Assignment of a responsible individual for approval and communication of changes in the Work;

2. Documentation of change in Contract Price and Contract Time;

3. Change procedures, using proposals and Modifications;

4. Execution of Change Orders;

5. Correlation of Contractor submittals.

### 1.02 REFERENCES

A. Blue Book is defined as the Rental Rate Blue Book for Construction Equipment (a.k.a. Data Quest Blue Book).

B. Rental Rate is defined as the full-unadjusted base rental rate for the appropriate item of construction equipment.

### 1.03 RESPONSIBLE INDIVIDUAL

A. Provide a letter indicating the name and address of the individual authorized to execute Modifications, and who will be responsible for informing others in Contractor's employ and Subcontractors of changes to the Work. Provide this information at the pre-construction meeting.

### 1.04 DOCUMENTATION OF CHANGE IN CONTRACT PRICE AND CONTRACT TIME

A. Maintain detailed records of changes in the Work. Provide full information required for identification and evaluation of proposed changes, and substantiate costs of changes in the Work.

B. Document each proposal for change in Contract Price or Contract Time with sufficient data to allow evaluation of proposal.

C. Include the following minimum information on proposals:

1. Quantities of items in original Document 00410 – Bid Form with additions, reductions, deletions, and substitutions.

2. Quantities and cost of items in original Schedule of Values with additions, reductions, deletions and substitutions.

3. Provide Unit Prices for new items, with supporting information, for inclusion in Schedule of Unit Price Work.

4. Justification for changes in Contract Time.

5. Additional data upon request.

D. For changes in the Work performed on a time-and-material basis, provide the following additional information:

1. Quantities and description of Products.

2. Taxes, insurance and Bonds.

3. Overhead and profit as noted in Document 00700 - General Conditions.

4. Dates, times and by who work was performed.

5. Time records and certified copies of applicable payrolls.

6. Invoices and receipts for Products, rental equipment, and subcontracts, similarly documented.

E. For changes in the Work performed on a time-and-materials basis, rental equipment is paid as follows:

1. Actual invoice cost for duration of time required to complete extra work without markup for overhead and profit. When extra work comprises only a portion of a rental invoice where equipment would otherwise be on site, compute hourly equipment rate by dividing the actual monthly invoice by 176. One day equals eight hours and one week equals 40 hours.

2. Do not exceed estimated operating costs given in Blue Book for items of equipment. Overhead and profit will be allowed on the operating cost.

F. For changes in the Work performed on a time-and-materials basis using Contractor-owned equipment, use Blue Book rates as follows:

1. Contractor-owned equipment will be paid at the Blue Book Rental Rate for the duration of time required to complete extra work without markup for overhead and profit. Utilize lowest cost combination of hourly, daily, weekly or monthly rates. Use 150 percent of Rental Rate for double shifts, one extra shift per day, and 200 percent of Rental Rate for more than two shifts per day. Standby rates shall be 50 percent of the appropriate Rental Rate shown in Blue Book. No other rate adjustments apply.

2. Do not exceed estimated operating costs given in Blue Book. Overhead and profit will be allowed on operating costs. Operating costs will not be allowed for equipment on standby.

1.05 CHANGE PROCEDURES

A. Changes to Contract Price or Contract Time can only be made by issuance of Document 00941 - Change Order. Issuance of Document 00940 - Work Change Directive will be formalized into a Change Order. Changes will be in accordance with requirements of Document 00700 - General Conditions.

B. City Engineer will advise of Minor Changes in the Work as authorized by the Document 00700 - General Conditions by issuing Document 00942 – Minor Change.

C. Request clarification of Drawings, Specifications, Contract documents or other information by using Document 00931- Request for Information. Response by Project Manager to Requests for Information does not authorize Contractor to perform tasks outside scope of the Work. Changes must be authorized as described in this Section.

1.06 PROPOSALS AND CONTRACT MODIFICATIONS

A. Project Manager may issue Document 00932- Request for Proposal, which includes a detailed description of the proposed change with supplementary or revised Drawings and Specifications. Project Manager may also request a proposal in response to a Request for Information. Prepare and submit the proposal within seven days or as specified in request.

B. Submit requests for Contract changes to City Engineer describing proposed change and its full effect on the Work, with a statement describing reason for change and effect on Contract Price and Contract Time including full documentation.

C. Design Consultant may review Change Orders.

1.07 WORK CHANGE DIRECTIVE

A. City Engineer may issue a signed Work Change Directive instructing Contractor to proceed with a change in the Work. Work Change Directive will subsequently be incorporated into a Change Order.

B. Work Change Directives will describe changes in the Work and designate the method of determining change in Contract Price or Contract Time.

C. Proceed promptly to execute changes in the Work in accordance with the Work Change Directive.

1.08 STIPULATED PRICE CHANGE ORDER

A. A Stipulated Price Change Order will be based on an accepted proposal.

1.09 UNIT PRICE CHANGE ORDER

A. Where Unit Prices for affected items of the Work are included in Document 00410 – Bid Form, the Change Order will be based on Unit Prices, subject to Articles 7 and 9 of Document 00700 - General Conditions.

B. Where Unit Prices of the Work are not pre-determined in Document 00410-Bid Form, the Work Change Directive or accepted proposal will specify the Unit Prices to be used.

1.10 TIME-AND-MATERIAL CHANGE ORDER

A. Provide itemized account and supporting data after completion of change, within time limits indicated for claims in Document 00700 - General Conditions.

B. City Engineer will determine the change allowable in Contract Price and Contract Time as provided in Document 00700 - General Conditions.

C. Maintain detailed records for work done on time-and-material basis as specified in Paragraph 1.04 above.

D. Provide full information required for evaluation of changes and substantiate costs for changes in the Work.

1.11 EXECUTION OF CHANGE DOCUMENTATION

A. City Engineer will issue Change Orders, Work Change Directives, or Minor Change in the Work for signatures of Parties as described in Document 00700 - General Conditions.

1.12 CORRELATION OF CONTRACTOR SUBMITTALS

A. For Stipulated Price Contracts, promptly revise Schedule of Values and Application for Payment forms to record authorized Change Orders as separate line item.

B. For Unit Price Contracts, the next monthly estimate of the Work after acceptance of a Change Order will be revised to include new items not previously included with appropriate Unit Prices.

C. Promptly revise progress schedules to reflect change in Contract Time, and to adjust time for other items of work affected by the change, and resubmit for review.

D. Promptly enter changes to on-site and record copies of Drawings, Specifications or Contract documents as required in Section 01785 - Project Record Documents.

PART 2 P R O D U C T S - Not Used

PART 3 E X E C U T I O N - Not Used

END OF SECTION

Section 01270

# MEASUREMENT AND PAYMENT

## PART 1 GENERAL

### 1.01 SECTION INCLUDES

A. Procedures for measurement and payment plus conditions for nonconformance assessment and nonpayment for rejected Products.

### 1.02 AUTHORITY

A. Measurement methods delineated in Specification sections are intended to complement criteria of this Section. In event of conflict, requirements of the Specification section shall govern.

B. Project Manager will take all measurements and compute quantities accordingly.

C. Assist by providing necessary equipment, workers, and survey personnel.

D. Measurement and Payment paragraphs are included only in those Specification sections of Division 01 where direct payment will be made. Include costs in the total bid price for those Specification sections in Division 01 that do not contain Measurement and Payment paragraphs,

### 1.03 UNIT QUANTITIES SPECIFIED

A. Quantity and measurement estimates stated in the Agreement are for contract purposes only. Quantities and measurements supplied or placed in the Work and verified by Project Manager will determine payment as stated in Article 9 of Document 00700 - General Conditions.

B. When actual work requires greater or lesser quantities than those quantities indicated in Document 00410 – Bid Form, provide required quantities at Unit Prices contracted, except as otherwise stated in Article 9 of Document 00700 - General Conditions.

### 1.04 MEASUREMENT OF QUANTITIES

A. Measurement by Weight: Reinforcing steel, rolled or formed steel or other metal shapes are measured by CRSI or AISC Manual of Steel Construction weights. Welded assemblies are measured by CRSI or AISC Manual of Steel Construction or scale weights.

B. Measurement by Volume:

1. Stockpiles: Measured by cubic dimension using mean length, width, and height or thickness.

2. Excavation and Embankment Materials: Measured by cubic dimension using average end area method.

C. Measurement by Area: Measured by square dimension using mean length and width or radius.

D. Linear Measurement: Measured by linear dimension, at item centerline or mean chord.

E. Stipulated Price Measurement: By unit designated in the Agreement.

F. Other: Items measured by weight, volume, area, or linear means or combination, as appropriate, as completed item or unit of the Work.

G. Measurement by Each: Measured by each instance or item provided.

H. Measurement by Lump Sum: Measure includes all associated work.

1.05 PAYMENT

A. Payment includes full compensation for all required supervision, labor, Products, tools, equipment, plant, transportation, services, and incidentals; and erection, application or Installation of an item of the Work; and Contractor's overhead and profit.

B. Total compensation for required Unit Price work shall be included in Unit Price bid in Document 00410 – Bid Form. Claims for payment as Unit Price work, but not specifically covered in the list of Unit Prices contained in Document 00410 – Bid Form, will not be accepted.

C. Interim payments for stored materials will be made only for materials to be incorporated under items covered in Unit Prices, unless disallowed in Document 00800 - Supplementary Conditions.

D. Progress payments will be based on Project Manager's observations and evaluations of quantities incorporated in the Work multiplied by Unit Price.

E. Final payment for work governed by Unit Prices will be made on the basis of actual measurements and quantities determined by Project Manager multiplied by the Unit Price for work which is incorporated in or made necessary by the Work.

1.06 NONCONFORMANCE ASSESSMENT

A. Remove and replace work, or portions of the Work, not conforming to the Contract documents.

B. When not practical to remove and replace work, City Engineer will direct one of the following remedies:

1. Nonconforming work will remain as is, but Unit Price will be adjusted lower at discretion of City Engineer.

2. Nonconforming work will be modified as authorized by City Engineer, and the Unit Price will be adjusted lower at the discretion of City Engineer, when modified work is deemed less suitable than specified.

C. Specification sections may modify the above remedies or may identify a specific formula or percentage price reduction.

D. Authority of City Engineer to assess nonconforming work and identify payment adjustment is final.

1.07 NONPAYMENT FOR REJECTED PRODUCTS

A. Payment will not be made for any of the following:

1. Products wasted or disposed of in an unacceptable manner.

2. Products determined as nonconforming before or after placement.

3. Products not completely unloaded from transporting vehicles.

4. Products placed beyond lines and levels of required work.

5. Products remaining on hand after completion of the Work, unless specified otherwise.

6. Loading, hauling, and disposing of rejected Products.

PART 2 P R O D U C T S - Not Used

PART 3 E X E C U T I O N - Not Used

END OF SECTION

Section 01292

# SCHEDULE OF VALUES

## PART 1 GENERAL

### 1.01 SECTION INCLUDES

A. Preparation and submittal of Schedule of Values for Stipulated Price Contracts or for Major Unit Price Work on Unit Price Contracts.

### 1.02 PREPARATION

A. For Stipulated Price Contracts, subdivide the Schedule of Values into logical portions of the Work, such as major work items or work in contiguous construction areas. Use Section 01325 - Construction Schedule as a guide to subdivision of work items. Directly correlate Items in the Schedule of Values with tasks in the Construction Schedule. Organize each portion using the Project Manual Table of Contents as an outline for listing value of the Work by Sections. A pro rata share of mobilization, Bonds, and insurance may be listed as separate items for each portion of the Work.

B. For Unit Price Contracts, items should include a proportional share of Contractor's overhead and profit so that total of all items will equal Contract Price.

C. For lump sum equipment items, where submittal of operation and maintenance data and testing are required, include separate items for equipment operation and maintenance data where:

1. submittal of maintenance data is valued at five percent of the lump sum amount for each equipment item and

2. submittal for testing and adjusting is valued at five percent of the lump sum amount for each equipment item.

Round off figures for each item listed to the nearest $100. Set the value of one item, when necessary, to make total of all values equal the Contract Price for Stipulated Price Contracts or the lump sum amount for Unit Price Work.

1.03 SUBMITTAL

A. Submit the Schedule of Values, in accordance with requirements of Section 01330 - Submittal Procedures, at least 10 days prior to processing of the first Certificate for Payment.

B Submit the Schedule of Values in an approved electronic spreadsheet file and an 81/2-inch by 11-inch print on white bond paper.

C. Revise Schedule of Values for items affected by Contract Modifications. After City Engineer has reviewed changes, resubmit at least 10 days prior to the next scheduled Certificate for Payment date.

PART 2 P R O D U C T S - Not Used

PART 3 E X E C U T I O N - Not Used

END OF SECTION

Section 01312

# COORDINATION AND MEETINGS

## PART 1 GENERAL

### 1.01 SECTION INCLUDES

A. General coordination including pre-construction meeting, site mobilization conference, and progress meetings.

### 1.02 COORDINATION OF DOCUMENTS

A. Coordination is required throughout documents. Refer to Contract documents and coordinate as necessary.

### 1.03 CONTRACTOR COORDINATION

A. Coordinate scheduling, submittals, and work of various Specification sections to assure efficient and orderly sequence of Installation of interdependent construction elements.

B. Coordinate completion and clean up of the Work prior to the Date of Substantial Completion and for portions of the Work designated for City's partial occupancy.

C. Coordinate access to the site for correction of nonconforming work to minimize disruption of the City's activities where the City is in partial occupancy.

### 1.04 PRE-CONSTRUCTION MEETING

A. Project Manager will schedule pre-construction meeting.

B. Attendance Required: City representatives, Design Consultant, special consultants as required by Project Manager, Contractor, and major Subcontractors and Suppliers.

C. Agenda:

1. Distribution of Contract documents.

2. Designation of personnel representing the Parties and Design Consultant.

3. Review of insurance.

4. Discussion of formats for Schedule of Values and Construction Schedule.

5. Procedures and processing of Shop Drawings, substitutions, pay estimates or Applications for Payment, Requests for Information, Requests for Proposal, Modifications, and the Contract closeout, other submittals.

6. Scheduling of the Work and coordination with other contractors.

7. Review of Subcontractors and Suppliers.

8. Appropriate agenda items listed for the site mobilization conference, Paragraph 1.05.C, when pre-construction meeting and site mobilization conference are combined.

9. Procedures for testing.

10. Procedures for maintaining record documents.

1.05 SITE MOBILIZATION CONFERENCE

A. When required by Contract documents, Project Manager will schedule a conference at the Project site prior to Contractor mobilization.

B. Attendance Required: City representatives, Design Consultant, special consultants, Superintendent, and major Subcontractors.

C. Agenda:

1. Use of premises by the City and Contractor.

2. Safety and first aid procedures.

3. Construction controls provided by the City.

4. Temporary utilities.

5. Survey and layout.

6. Security and housekeeping procedures.

7. Field office requirements.

1.06 PROGRESS MEETINGS

A. Hold meetings at Project field office or other location designated by Project Manager. Hold meetings at monthly intervals, or more frequently when directed by Project Manager.

B. Attendance Required: Superintendent, major Subcontractors and Suppliers, City representatives, Design Consultant and its subconsultants as appropriate for agenda topics for each meeting.

C. Project Manager will make arrangements for meetings, and for recording minutes.

D. Project Manager will prepare the agenda and preside at meetings.

E. Provide required information and be prepared to discuss each agenda item.

F. Agenda:

1. Review minutes of previous meetings.

2. Review of construction schedule, pay estimates, cash flow curve, payroll and compliance submittals.

3. Field observations, problems, and necessary decisions.

4. Identification of problems that impede planned progress.

5. Review of submittal schedule and status of submittals.

6. Review of RFI and RFP status.

7. Modification status.

8. Review of off-site fabrication and delivery schedules.

9. Maintenance of Construction Schedule.

10. Corrective measures to regain Construction Schedule.

11. Planned progress during the succeeding work period.

12. Coordination of projected progress.

13. Maintenance of quality and work standards.

14. Effect of proposed Modifications on Construction Schedule and coordination.

15. Review Project Record Contract Drawings.

16. Other item relating to the Work.

PART 2 P R O D U C T S - Not Used

PART 3 E X E C U T I O N - Not Used

END OF SECTION

Section 01321

# CONSTRUCTION PHOTOGRAPHS

## PART 1 GENERAL

### 1.01 SECTION INCLUDES

A. Photographic requirements for construction photographs and submittals.

### 1.02 DEFINITIONS

A. Pre-construction Photographs: Photographs taken, in sufficient numbers and detail, prior to Date of Commencement of the Work, to show original construction site conditions.

B. Progress Photographs: Photographs, taken throughout the duration of construction at regular intervals and from fixed vantage points, pre-approved by the City, that document progress of the Work.

C. Finished Photographs: Photographs, taken by a professional photographer near Date of Substantial Completion and before City Council's acceptance of the Work, that are suitable for framing and for use in brochures or on the Internet

### 1.03 SUBMITTALS

A. Refer to Section 01330, Submittal Procedures, for submittal requirements.

B. Format and Media. Film or digital photography may be used. Submit color photographs, unless otherwise specified.

1. Prints. Submit each Progress or Pre-construction Photograph print in a three-hole plastic pocket or sleeve, bound in a three-ring notebook. Produce prints on photographic-quality paper approved by Project Manager. Minimum size for Pre-construction Photograph prints shall be 3-inches by 5-inches. Progress Photograph prints shall be 8-inches by 10-inches.

2. Film. Use 35mm or larger color film. Submit negatives used to make submitted photographs, in 3-hole 8-1/2 inch by 11-inch plastic sheets with sleeves for negatives.

3. Digital Photography. Use 2.1 megapixel density or greater for photographs. Scanned photographs must equal or exceed 400 dots

per inch when scanned from 8-inch by 10-inch prints. Submit digital photographic files on computer disks. Format disks for MS-DOS (Microsoft Disk Operating System) filing system and in JPEG (Joint Photographic Experts Group) format.

C. Submittal Quantities and Frequencies.

1. Pre-construction Photographs:
   a. For Stipulated Price Contracts, submit two sets of Pre-construction Photographs, if required, prior to first Application for Payment.
   b. For Unit Price Contracts, submit two sets of Pre-construction Photographs prior to start of construction operations.

2. Progress Photographs:
   a. For Stipulated Price Contracts, submit three sets of Progress Photographs with each Application for Payment at the times established for submittal of Applications for Payment. Monthly Applications for Payment shall be deemed incomplete if not accompanied by the required Progress Photographs. Contractor's failure or election to not submit a monthly Application for Payment shall not affect the requirement for monthly Progress Photographs.
   b. Progress Photographs are not required for Unit Price Contracts unless otherwise specified.

3. Finished Photographs: For Stipulated Price Contracts submit two sets of Finished Photographs, if required, after Date of Substantial Completion and prior to final payment. Each set shall contain one 11-inch by 14-inch matte finish color photographic print from each of the two vantage points pre-approved by the City. Vantage points for Finished Photographs will be approved separately from vantage points approved for Progress Photographs. Finished Photographs are not required for Unit Price Contracts unless otherwise specified.

D. Labeling. Place a label on the back of each photographic print, applied so as to not to show through on the front. Labels shall contain the following information:

1. Name of Project, address of Project and GFS Number.

2. Name and address of Contractor.

3. Date photograph was taken.

4. Location photo was taken from and short description of photo subject.

5. Name and address of professional photographer who took the photograph, if applicable.

E. Hand-deliver or transmit prints in standard photographic mailers marked "Photographs - Do Not Bend".

F. Photographic prints, negatives, photographic files and disks become the property of the City. Do not be publish photographs without written consent by the City.

1.04 QUALITY ASSURANCE

A. Contractor shall be responsible for the quality of and timely execution and submittal of photographs.

B. For Finished Photographs, Contractor shall use a professional photographer, with five years minimum professional experience in the Houston area. Contractor shall submit name, address and credentials of professional photographer for Project Manager's review and approval.

PART 2 PRODUCTS - Not Used

PART 3 EXECUTION

3.01 PRE-CONSTRUCTION PHOTOGRAPHS

A. Prior to commencement of construction operations, photograph the site to include initial construction corridor, detour routes, and staging or storage areas.

1. For Stipulated Price Contracts, unless specified as a requirement in other Sections, these photographs are optional for Contractor, but are highly recommended for areas bounded by other property owners.

2. Pre-construction photographs are required for Unit Price Contracts. For line projects with scheduled construction segments, take Pre-construction Photographs prior to commencement of work on each segment.

B. Prepare Pre-construction Photographs as follows:

1. Show the following information on a non-reflective chalkboard placed within the picture frame:
   a. Job number.
   b. Project Number.
   c. Date and time photographs were taken (Automatic date/time in negative is acceptable).
   d. Baseline station, direction of view (i.e. N, S, NW, etc.) and house number or street address and street name.

2. Pre-construction Photographs shall indicate condition of the following:
   a. Esplanades and boulevards.
   b. Yards (near side and far side of street).
   c. House walks and sidewalks.
   d. Curbs.
   e. Areas between walks and curbs.
   f. Particular features (e.g. yard lights, shrubs, fences, trees).

3. Show date photographs were taken on negatives.

C. Show the location of vantage points and direction of shots on a key plan of the site.

3.02 PROGRESS PHOTOGRAPHS

A. Progress Photographs document monthly advancement of the Work. Select vantage points for each shot so as to best show status of construction and progress since last photograph submittal. Select camera stations that will require little or no movement or adjustment over the duration of construction.

B. Take monthly Progress Photographs at regular intervals to coincide with cutoff dates associated with each Application for Payment.

3.03 FINISHED PHOTOGRAPHS

A. Finished Photographs shall be "staged" and taken by a professional photographer to depict the most flattering images of a finished facility. Two vantage points, from which Finished Photographs will be taken, shall be agreed to in advance by the City. Photographer shall consider lighting, time of day, height of eye, landscaping and placement of vehicles, people and other props in each picture. Filters and post-photography processing may be utilized to achieve a finished product acceptable to the City.

3.04 LOCATION

A. Vantage points, times and conditions for camera stations and photography for Progress and Finished Photographs shall be mutually agreed upon by the City, Contractor and Photographer. Progress Photograph vantage points may be changed by mutual agreement as the Work progresses, at no additional cost to the City.

END OF SECTION

Section 01325

# CONSTRUCTION SCHEDULE

## PART 1 G E N E R A L

### 1.01 GENERAL

A. Provide Construction Schedules for the Work included in this Contract in accordance with requirements in this Section. Create Construction Schedule using Critical Path Method (CPM) computer software capable of mathematical analysis of Precedence Diagramming Method (PDM) plan. Provide printed activity listings and bar charts in formats described in this Section.

B. Combine activity listings and bar charts with narrative report to form Construction Schedule submittal for Project Manager.

### 1.02 SCHEDULING STAFF

A. Employ or retain services of individual experienced in CPM scheduling for duration of the Contract. Individual shall cooperate with Project Manager and update schedule monthly as required to indicate current status of the Work.

### 1.03 SUBMITTALS

A. Conform to requirements of Section 01330 - Submittal Procedures.

B. During preconstruction meeting, as described in Section 01312 - Coordination and Meetings, provide sample bar charts and activity listings produced from scheduling software proposed. Scheduling software is subject to review by Project Manager and must meet requirements provided in this Section. Project Manager will provide review of samples within seven days of submittal.

C. Within 21 days of receipt of approval of Contractor's format, or 30 days of Notice to Proceed, whichever is later, submit proposed Construction Schedule for review. Base Construction Schedule submittal on the following:

1. Level of detail and number of activities required in schedule are dependent on project type.
   a. For wastewater projects, categorize work type and area code in schedule.
      1) For wastewater rehabilitation projects, there are six work-type categories. An area code will be assigned for each

Meter Service Area or Basin. Include at least one activity for each unique combination of work type and area code. Normal schedules of wastewater rehabilitation projects contain between 35 and 100 activities, depending on number of basins and work types involved in each basin.

2) For wastewater relief projects (line work), area codes will be assigned geographically.

3) For wastewater plant or facility work, other criteria may apply to assignment of area codes, such as a combination of geographical and craft categories.

b. For projects with multiple types of tasks within scope, indicate types of work separately within schedule.

c. For projects with work at different physical locations or service areas, or different facilities within a site, indicate each location or facility separately within schedule. Show work on each floor of multi-story building as separate tasks.

d. For projects with multiple crafts or significant Subcontractor components, indicate elements separately within schedule. Unless permitted by Project Manager, tasks shall consist of work covered by only one division of Project Manual.

2. Unless permitted by Project Manager, each scheduled task shall be same as Schedule of Values line item, and vice versa.

3. For projects with Major Unit Price Work, indicate Shop Drawing submittal and review, purchase, delivery, and Installation dates on Project schedule. Include activities for testing, adjustment, and delivering O&M manuals.

4. No task except the acquisition of Major Unit Price Work shall represent more than one percent of Original Contract Price for facility projects and three percent of Original Contract Price for other projects. Duration of tasks may not exceed 40 calendar days.

5. For projects where operating facilities are involved, identify each period of work that will impact any process or operation in the schedule and that must be agreed to by Project Manager and facility operator prior to starting work in the area.

D. Construction Schedule submittals shall include:

1. printed bar charts that meet criteria outlined in this Section and are produced by Contractor's approved scheduling software;

2. activity listings that meet criteria outlined in this Section and are produced by Contractor's approved scheduling software; and

3. a predecessor/successor listing sorted by Activity ID that meets criteria outlined in this Section and is produced by Contractor's scheduling software.

4. A logic network diagram is required with the first Construction Schedule submittal for facilities projects.

5. Prepare and submit graphic or tabular display of estimated monthly billings (i.e. a cash flow curve for the Work) with the first schedule submittal. This information is not required in monthly updates, unless significant changes in work require re-submittal of schedule for review. Display shall allocate units indicated in bid schedule or Schedule of Values to Construction Schedule activities. Weighted allocations are acceptable, where appropriate. Dollar value associated with each allocated unit will be spread across the duration of that activity on a monthly basis. Total for each month and cumulative total will be indicated. These monthly forecasts are only for Project Manager's planning purposes. Monthly payments for actual work completed will be made in accordance with Document 00700 - General Conditions.

6. Narrative Report that provides the information outlined in this Section.

E. No payment will be made until Project Manager approves Construction Schedule and billing forecast.

F. If Contractor desires to make changes in its method of operating and scheduling, after Project Manager has reviewed original schedule, notify Project Manager in writing, stating reasons for changes. When Project Manager considers these changes to be significant, Contractor may be required to revise and resubmit for review all or affected portion of Contractor's Construction Schedule to show effect on the Work.

G. Upon written request from Project Manager, revise and submit for review all or any part of Construction Schedule submittal to reflect changed conditions in the Work or deviations made from original schedule.

H. Updated Construction Schedule with actual start and actual finish dates, percent complete, and remaining duration of each activity shall be submitted monthly. Data date used in updating monthly Construction Schedule shall be the same date as used in monthly Payment Application. Monthly update of Construction Schedule is required for monthly Payment Application to be processed for payment.

1.04 SCHEDULING COMPUTER SOFTWARE REQUIREMENTS

A. Contractor's scheduling software shall be capable of creating bar charts and activity listings, which can be sorted by various fields (i.e. Activity ID, Early Start, Total Float, Area Code, Specification Section number, and Subcontractor). Use software capable of producing logic network diagram.

B. Use scheduling software capable of producing activity listings and bar charts with the following information for each activity in the schedule:

1. Activity ID
2. Activity Description
3. Estimated (Original) Duration
4. Remaining Duration
5. Actual Duration
6. Early Start Date
7. Late Start Date
8. Early Finish Date
9. Late Finish Date
10. Free Float
11. Total Float
12. Activity Codes (such as Area Code, Work Type, Specification Section, Subcontractor)

C. Use scheduling software capable of printing calendars using mathematical analysis of schedule, indicating standard workdays of week and scheduled holidays.

D. Use scheduling software capable of printing activity listing that indicates predecessors and successors, lag factors and lag relationships used in creating logic of the schedule.

E. Use scheduling software to provide monthly time in Bar Chart format and scale with 12-month scale not to exceed one page width. Bar charts may be

printed or plotted on 8-1/2 by 11-inch, 8-1/2 by 14-inch or 11 by 17-inch sheet sizes. Over-size plots are not acceptable.

1.05 NARRATIVE SCHEDULE REPORT

A. Narrative schedule report shall list activities started this month, activities completed this month, activities continued this month, activities scheduled to start or complete next month, problems encountered this month, and actions taken to solve these problems.

B. Narrative schedule report shall describe changes made to Construction Schedule logic (i.e. changes in predecessors and lags), activities added to schedule, activities deleted from schedule, any other changes made to the schedule other than addition of actual start dates and actual finish dates and changes of data date and remaining durations for re-calculation of mathematical analysis.

PART 2 P R O D U C T S - Not Used

PART 3 E X E C U T I O N - Not Used

END OF SECTION

Section 01326

# CONSTRUCTION SCHEDULE (BAR CHART)

## PART 1 GENERAL

### 1.01 SECTION INCLUDES

A. Provide an initial Construction Schedule as required by this section for the Work. Do not start construction until Project Manager reviews the schedule.

### 1.02 FORM AND CONTENT OF INITIAL CONSTRUCTION SCHEDULE

A. Bar Chart:

1. Show major construction activities such as pipe laying, by traffic control phases or other approved key areas; tunnel construction, pavement removal, pavement replacement, pressure testing, chlorination, clean up and punch list as separate activities on the schedule.

2. Show week duration for each activity.

3. Show separate activities for each Shop Drawing and Product Data submittal critical to timely completion. Show submittal dates and dates Project Manager needs to provide approved submittals.

4. Provide separate horizontal bar for each activity. List start and finish date for each activity at left side of diagram.

5. Horizontal Time Scale: Identify first work day of each week.

6. Scale and Spacing: Notes must be legible. Allow space for notations and future revisions.

7. Order of Listings: Order bar chart listings by phases or other approved groups of activities that are contiguous. List activities in chronological order within each phase or group.

B. Narrative Description:

1. Submit narrative descriptions of anticipated work sequences as indicated by the sequence of activities presented in the schedule.

2. Discuss any activity that affects the public (such as phases of traffic control), interaction with specific forces of the City (such as valve operation, chlorination and testing) or other associated contractors.

1.03 PROGRESS REVISIONS

A. Submit progress revisions or necessary information to complete and process Payment Applications. When required, re-submittals for rejected revisions must be submitted and reviewed prior to the following month's processing of a Payment Application. The following month's Payment Application will not be processed until the re-submittal is reviewed and required progress revisions are received.

B. Provide a narrative report to describe:

1. Major changes in scope.

2. Revised projections in progress, completion, or changes in activity duration.

3. Other identifiable changes.

4. Problem areas, anticipated delays, and the impact on schedule.

5. Corrective action recommended and its effect.

6. Effect of changes on schedules or other contractors.

7. Product delivery lead times.

C. Include additional data with Bar Chart described in Paragraph 1.03A of this Section:

1. Show original dates for each activity in the approved initial progress schedule by narrow bar next to a wider bar for the current schedule.

2. Show date each activity actually started or finished when an event has occurred. Clearly identify actual dates in two right-most columns in left portion of an 11 by 17-inch chart.

3. Indicate the percentage progress to the date of submittal for each activity.

1.04 SUBMITTALS

A. Submit the initial progress schedule within 15 days after award of contract. Project Manager will review the schedule and return a reviewed copy within 21 days after receipt.

B. Cut-off dates for progress revisions may be as early as the 20th of the month to avoid delaying processing of Payment Applications. Use the cut-off date for the first approved revision for further revisions.

C. When required, re-submit within seven days after return of review copy.

D. Include connecting lines between bars in the schedule to indicate the sequence that activities will be accomplished. Connecting lines when the activity's start or finish is modified will identify impact of preceding or succeeding activities. Submit a minimum of six copies of the bar chart on 11 by 17-inch opaque reproductions. Project Manager will retain five copies and return the remaining copy.

PART 2 P R O D U C T S - Not Used

PART 3 E X E C U T I O N - Not Used

END OF SECTION

Section 01330

# SUBMITTAL PROCEDURES

## PART 1 G E N E R A L

### 1.01 SECTION INCLUDES

A. Submittal procedures for:

1. Schedule of Values
2. Construction Schedules and Cash Flow Curve (billing forecast).
3. Shop Drawings, Product Data and Samples
4. Operations and Maintenance (O&M) Data
5. Manufacturer's Certificates
6. Construction Photographs
7. Project Record Documents and monthly certification.
8. Video Tapes
9. Design Mixes

### 1.02 SUBMITTAL PROCEDURES

A. Scheduling and Handling:

1. Submit Shop Drawings, data and Samples for related components as required by Specifications and Project Manager.
2. Schedule submittals well in advance of need for construction Products. Allow time for delivery of Products after submittal approval.
3. Develop submittal schedule that allows sufficient time for initial review, correction, resubmission and final review of all submittals. Allow a minimum of 30 days for initial review. Project Manager will review and return submittals to Contractor as expeditiously as possible but time required for review will vary depending on complexity and quantity of data submitted.

4. Project Manager's review of submittals covers only general conformity to Drawings, Specifications and dimensions that affect layout. Contractor is responsible for quantity determination. No quantities will be verified by Project Manager. Contractor is responsible for errors, omissions or deviations from Contract requirements; review of submittals does not relieve Contractor from the obligation to furnish required items in accordance with Drawings and Specifications.

5. Submit five copies of documents unless otherwise specified.

6. Revise and resubmit submittals as required. Identify all changes made since previous submittal.

7. Assume risk for fabricated Products delivered prior to approval. Do not incorporate Products into the Work, or include payment for Products in periodic progress payments, until approved by Project Manager.

B. Transmittal Form and Numbering:

1. Transmit each submittal to Project Manager with Transmittal letter which includes:
   a. Date and submittal number
   b. Project title and number
   c. Names of Contractor, Subcontractor, Supplier and manufacturer
   d. Identification of Product being supplied
   e. Location of where Product is to be Installed
   f. Applicable Specification section number

2. Identify deviations from Contract documents clouding submittal drawings. Itemize and detail on separate 8-1/2 by 11-inch sheets entitled "DEVIATIONS FOR _____." When no deviations exist, submit a sheet stating no deviations exist.

3. Have design deviations signed and sealed by an appropriate design professional, registered in the State of Texas.

4. Sequentially number transmittal letters beginning with number one. Use original number for resubmittals with an alphabetic suffix (i.e., 2A for the first resubmittal of submittal 2, or 15C for third resubmittal of submittal 15, etc.). Show only one type of work or Product on each submittal. Mixed submittals will not be accepted.

C. Contractor's Stamp:

1. Apply Contractor's Stamp certifying that the items have been reviewed in detail by Contractor and that they comply with Contract requirements, except as noted by requested variances.

2. As a minimum, Contractor's Stamp shall include:
   a. Contractor's name
   b. Job number
   c. Submittal number
   d. Certification statement Contractor has reviewed submittal and it is in compliance with the Contract
   e. Signature line for Contractor

D. Submittals will be returned with one of the following Responses:

1. "ACKNOWLEDGE RECEIPT" when no response and resubmittal is required.

2. "NO EXCEPTION" when sufficient information has supplied to determine that item described is accepted and that no resubmittal is required.

3. "EXCEPTIONS AS NOTED" when sufficient information has been supplied to determine that item will be acceptable subject to changes, or exceptions, which will be clearly stated. When exceptions require additional changes, the changes must be submitted for approval. Resubmittal is not required when exceptions require no further changes.

4. "REJECTED-RESUBMIT" when submittal does not contain sufficient information, or when information provided does not meet Contract requirements. Additional data or details requested by Project Manager must be submitted to obtain approval.

1.03 MANUFACTURER'S CERTIFICATES

A. When required by Specification sections, submit manufacturers' certificate of compliance for review by Project Manager.

B. Place Contractor's Stamp on front of certification.

C. Submit supporting reference data, affidavits, and certifications as appropriate.

D. Product certificates may be recent or from previous test results, but must be acceptable to Project Manager.

1.04 DESIGN MIXES

A. When required by Specification sections, submit design mixes for review.

B. Place Contractor's Stamp, as specified in this section, on the front of each design mix.

C. Mark each mix to identify proportions, gradations, and additives for each class and type of mix submitted. Include applicable test results from samples for each mix. Perform tests and certifications within 12 months of the date of the submittal.

D. Maintain copies of approved mixes at mixing plant.

1.05 CHANGES TO CONTRACT

A. Changes to Contract may be initiated by completing a Request for Information form. Project Manager will provide a response to Contractor by completing the form and returning it to Contractor.

1. If Contractor agrees that the response will result in no increase in cost or time, a Minor Change in the Work will be issued by City Engineer.

2. If Contractor and Project Manager agree that an increase in time or cost is warranted, Project Manager will forward the Request for Proposal for negotiation of a Change Order.

PART 2 P R O D U C T S - Not Used

PART 3 E X E C U T I O N - Not Used

END OF SECTION

Section 01340

# SHOP DRAWINGS, PRODUCT DATA, AND SAMPLES

## PART 1 G E N E R A L

### 1.01 SECTION INCLUDES

A. Methods, schedules, and processes to be followed for Shop Drawings, Product Data and Sample submittals.

### 1.02 REQUIREMENT

A. Submit Shop Drawings, Product Data and Samples as required by Document 00700 - General Conditions and Specification sections, using procedures specified in Section 01330 - Submittal Procedures and the requirements of this Section.

B. Shop Drawings, Product Data and Samples are not considered Contract documents.

### 1.03 SHOP DRAWING/SUBMITTAL SCHEDULE

A. Submit a separate Shop Drawing submittal schedule at same time the Construction Schedule is submitted. List Products for which Shop Drawings and other submittals are required in the order that they appear in Specifications. Include Product Data and Sample submittals in the schedule. Payment Applications or Certificates for Payment will not be processed until Project Manager has approved the Shop Drawing submittal schedule.

### 1.04 SHOP DRAWINGS

A. Submit a minimum of seven sets of Shop Drawings and Product Data in a form and quality suitable for microfilming. Review and sign Shop Drawings indicating compliance with the Contract.

B. Place Contractor's Stamp on each drawing as described in Section 01330 - Submittal Procedures.

C. Show the following accurately and distinctly:

1. Field and erection dimensions;

2. Arrangement and section views;

3. Relation to adjacent materials or structure, including complete information for making connections between the Work and work under other contracts;

4. Types of Products and finishes;

5. Parts list and descriptions;

6. Assembly drawings of equipment components and accessories showing respective positions and relationships to the complete equipment package;

7. Identify details by referencing drawing sheet and detail numbers, schedule or room numbers as shown on the Contract drawings, where necessary for clarity.

D. Scale drawings to provide a true representation of the specific equipment or item Furnished.

E. Coordinate and submit components, necessary for Project Manager to adequately review submittal, as a complete package. Reproduction of the Drawings for use in Shop Drawings is not allowed.

F. For major changes to original documents, submit Computer-Aided Design (CAD) drawings on a media acceptable to Project Manager.

1.05 PRODUCT DATA

A. Submit Product Data for review as required in Specifications.

B. Place Contractor's stamp, on each data item submitted, as described in Section 01330 - Submittal Procedures.

C. Mark each copy to identify applicable Products, models, and options to be used in the Work. Where required by Specifications, supplement manufacturers' standard data to provide information unique to the Work.

D. Give manufacturers, trade name, model or catalog designation and applicable reference standard for Products specified only by reference standards.

E. Pre-approved and Pre-qualified Products.

1. For "pre-approved", "pre-qualified" and "approved" Products named in the City standard products list, provide an appropriate list designation,

as described in Section 01630 - Product Substitution Procedures, within 30 days after Notice to Proceed.

2. For Products proposed as alternates to "approved" products, provide information required to demonstrate that the proposed Products meet the level of quality and performance criteria of the "approved" product.

1.06 SAMPLES

A. Submit Samples for review as required by Specifications. Have Samples reviewed and signed by a Registered Professional.

B. Place Contractor's stamp on each Sample or firmly attach a sheet of paper with Contractor's stamp, as described in Section 01330 - Submittal Procedures.

C. Submit the number of Samples specified in Specifications; Project Manager will retain one.

D. Reviewed Samples that may be used in the Work are identified in Specifications.

PART 2 P R O D U C T S - Not Used

PART 3 E X E C U T I O N - Not Used

END OF SECTION

SECTION 01351

# ENVIRONMENTAL SAFETY AND WORKER PROTECTION

## PART 1 GENERAL

### 1.01 SECTION INCLUDES

Environmental Safety and Worker Protection including monitoring emissions and exposure to workers and providing an appropriate response. The role of the Certified Industrial Hygienist (CIH) is also defined.

### 1.02 MEASUREMENT AND PAYMENT

No separate measurement and payment for work performed under this Section. The Contractor shall include the cost for this work in the contract bid price for work of which this is a component part.

### 1.03 REFERENCES

The following is a list of applicable requirements to this project. It is not intended to be a complete listing of all laws and regulations to which the Contractor must comply.

A. Code of Federal Regulations

1. 29 CFR 1910, "Occupational Safety and Health Standards".

   a. 29 CFR 1910.146 "Permit-required confined spaces".

2. 29 CFR 1926, "Safety and Health Regulations for Construction" (Construction Industry Standards).

   a. 29 CFR 1926.33 "Access to Employee Exposure and Medical Records".

   b. 29 CFR 1926.51, "Sanitation Standard".

   c. 29 CFR 1926.59, "Hazard Communication".

   d. 29 CFR 1926.62, "Lead".

   e. 29 CFR 1926.103 "Respiratory Protection".

3. 40 CFR 50, "National Primary and Secondary Ambient Air Quality

Standards"

a. 40 CFR 50 Appendix B, "Reference Method for the Determination of Suspended Particulate Matter in the Atmosphere (High Volume Method)".

b. 40 CFR 50 Appendix G, "Reference Method for the Determination of Lead in Suspended Particulate Matter Collected from Ambient Air".

4. 40 CFR 58, "Ambient Air Quality Surveillance".

5. 40 CFR 60 Appendix A, "Visual Determination of Fugitive Emissions from Material Sources and Smoke Emissions from Fires".

6. 40 CFR 117, "Determination of Reportable Quantities for Hazardous Substances".

7. 40 CFR 122, "Administered Permit Program: The National Pollutant Discharge Elimination System".

B. National Institute for Occupational Health and Safety

NIOSH Method 7082, "Lead" (or equivalent).

C. American Society for Testing and Materials

ASTM D3335, "Test Method for Low Concentrations for Lead, Cadmium, and Cobalt in Paint by Atomic Absorption Spectroscopy."

D. EPA (Environmental Protection Agency) Publications

1. SW-846, "Test Methods for Evaluating Solid Waste - Physical/Chemical Methods".

2. EPA Method 3050, "Acid Digestion of Sediments, Sludges, and Soils".

E. SSPC Guide 6, "Guide for Containing Debris Generated During Paint Removal Operations".

F. SSPC Guide 7, "Guide for the Disposal of Lead Contaminated Surface Preparation Debris".

G. SSPC Publication 91-18, "Industrial Lead Paint Removal Handbook".

H. Texas Commission on Environmental Quality

1. Texas Administrative Code (TAC) 30, Chapter 101, "General Rules".

2. Texas Administrative Code (TAC) 30, Chapter 111, "Control of Air Pollution from Visible Emissions and Particulate Matter".

3. Texas Administrative Code (TAC) 30, Chapter 290, "Water Hygiene".

4. Texas Administrative Code (TAC) 30, Chapter 307, "Surface Water Quality Standards".

5. Texas Administrative Code (TAC) 30, Chapter 309, "Effluent Limitations".

6. Texas Administrative Code (TAC) 30, Chapter 335, "Industrial Solid Waste and Municipal Hazardous Waste".

1.04 SUBMITTALS

A. Submittals shall conform to requirements of Section 01330 – Submittal Procedures.

B. Submittals shall conform to appropriate codes for regulatory requirements.

1.05 DEFINITION

A. Acceptance Criteria: Minimum standards for the content of programs, plans, procedures, and designs required by this specification for the performance of this project. Acceptance criteria will be the basis for judging the responsiveness of Contractors' programs and will also be used as a basis for suspending work, if necessary.

B. Action Level: Employee exposure, without regard to the use of respirators, to an airborne concentration of lead of 30 micrograms per cubic meter of air (µg/m3) calculated as an eight hour time-weighted average (TWA).

C. CERCLA: Comprehensive Environmental Response, Compensation, and Liability Act; commonly called Superfund. Federal laws addressing the clean up of hazardous waste sites. Amended in 1986 by Superfund Amendments and Re-Authorization Act (SARA). EPA implementing regulations are contained in 40 CFR 300-373.

D. Competent Person: One who is capable of identifying existing and predictable lead hazards in the surroundings or working conditions and who has authorization to take prompt corrective measures to eliminate them.

E. Containment System: An enclosure built around lead paint removal areas designed to contain lead paint debris and prevent emissions to the environment.

F. Dust Collection: Mechanical ventilation system designed specifically for the containment, capture, and removal of airborne particulate from the containment. Dust collection systems shall include ductwork, plenums and/or hoppers, and dust collector(s) for the removal of leaded paint dust from the air stream prior to discharging to the atmosphere.

G. Emission: A release of material to the air, water, or ground.

H. Entry/Exit Airlock: An isolated enclosure located at the entrance of the containment in which the workers remove contaminated dust and debris from their work clothes.

I. EPA: The US. Environmental Protection Agency. Regulations are contained in Title 40 of the Code of Federal Regulations (40 CFR).

J. Hazardous Waste (lead paint debris): Waste that is classified as hazardous due to its concentrations of regulated hazardous substances. Paint debris is classified as hazardous waste if, after testing by the Toxicity Characteristic Leaching Procedure (TCLP), the leachate contains any of the 8 metals or other substances in concentrations at or above limits established in 40 CFR 261.

K. HEPA: A high efficiency particulate filter (HEPA) that is 99.97% efficient against particles of 0.3 microns in size or larger.

L. Lead Containing Dust and Debris: Dust and debris generated during the project which contains lead in any amount, including but not limited to pulverized paint, spent abrasive, filters (wet and dry), and containment materials upon which lead is still present.

M. NIOSH: National Institute of Occupational Safety and Health.

N. OSHA: Occupational Safety and Health Administration. Standards are contained in Title 29 of the Code of Federal Regulations, Parts 1910 and 1926 (29 CFR 1910 and 29 CFR 1926).

O. Owner: The City of Houston

P. PEL: Permissible Exposure Limit. An employee exposure, without regard to the use of respirators, to an airborne concentration of lead of 50 µg/m3 over an 8 hour TWA.

Q. POTW: Publicly Owned Treatment Works

R. RCRA: Resource Conservation and Recovery Act. Federal law pertaining to hazardous waste management. EPA implementing regulations are contained in 40 CFR 240-280.

S. Regulated Area: Area established by the Contractor to demarcate the zone(s) beyond which airborne concentrations of lead do not exceed the Action Level.

T. SSPC: Society for Protective Coatings. An independent, non-profit organization of engineers, technical specialists, and Contractors whose goal is research and development of new coatings and methods for removal, application, and disposal of existing coatings on industrial structures.

U. Tarpaulins: Flexible fabric, vinyl, plastic or canvas cover sheets, impenetrable to dust, wind, and water, used to enclose the cable and/or scaffold support system comprising the containment enclosure.

V. TCLP: Toxicity Characteristic Leaching Procedure. Laboratory tests conducted on wastes that determine the amount of hazardous materials that leach out into a test solution. The test is intended to simulate the properties of water as it leaches through a solid waste landfill. TCLP testing is defined in 40 CFR 261, Appendix II.

W. TSP: Total Suspended Particulate

## PART 2 PRODUCTS

### 2.01 MATERIAL AND EQUIPMENT

A. The Contractor is to supply materials and equipment to insure the safety and protection of workers and the environment in accordance with these specifications.

## PART 3 EXECUTION

### 3.01 ENVIRONMENTAL PROTECTION AND MONITORING

**NOTE:** Section 09971 "Painting and Protective Coatings", 2.04 "Containment System" specifically identifies containment system requirements.

A. Protection of Ambient Air: Visible emissions are to be controlled to meet, as a minimum, TAC 30 Chapter 111," Control of Air Pollution from Visible Emissions and Particulate Matter" requirements and SSPC-Guide 6I (CON), Level 1 Emissions. Air monitoring and analysis may be performed by the City during abrasive blast cleaning operations. Such monitoring will be in accordance with 40

CFR 50, Appendix B, "Reference Method for the Determination of Suspended Particulate Matter in the Atmosphere" and/or 40 CFR 50, Appendix G, "Reference Method for the Determination of Lead in Suspended Particulate Matter Collected from Ambient Air". The limits for down wind pollutant concentrations allowed during blasting operations are as follows:

PM-10: 450 micrograms/cubic meter/ 8 hr.. (40 CFR 50.6)

Lead (Pb): 13.5 micrograms/cubic meter/8 hr.. (40 CFR 50.12)

Visible emissions and/or monitored emissions for PM-10 and TSP lead in excess of the above levels shall be cause for shut down of the project until corrections to control/ containment system or paint removal/ surface preparation operations are made to comply with these requirements.

B. Protection of Surface and Storm Water: The Contractor shall take all necessary precautions to ensure lead contaminants do not enter surface waters or storm water drainage systems.

1. The Contractor shall protect the area around ditches and drainage inlets. Daily verification of proper protection to minimize the potential contaminants reaching the drainage system shall be performed.

2. The Contractor shall collect all potentially contaminated process waters for testing and, as appropriate, treatment. Process water from pressure washing, wet abrasive blast cleaning or hygiene facilities shall not be discharged to drainage systems or surface waters.

3. The Contractor may remove lead or other heavy metals from such waters through filtration, ion exchange or other approved means. Following treatment, water samples must be tested prior to disposal. Discharge to sanitary sewer lines requires authorization, in writing, from a POTW.

C. Protection of Soil and Grounds: The Contractor shall protect the soil around the structure to ensure that the soil does not become contaminated. Where lead is present in the coatings to be removed, as indicated in Section 02136 "Waste Material Handling and Disposal", the Contractor shall provide for the sampling and analysis of soil samples for total lead content.

1. Sampling and analysis shall be performed prior to commencement of paint removal operations to establish a background "base level". Soil samples shall be taken 3 feet from the base of the tank(s), at a distance of 6-10 feet beyond the proposed containment structure and at the property line.

2. Samples from each area shall be taken in a minimum of four directions, at

circular increments of $90^0$, one of which shall include the direction of prevailing wind. Samples shall also be obtained, at the direction of the engineer, at the closest points of public access (i.e. housing, park, school).

3. The soil sampling procedure shall be as outlined in SSPC Guide 6 Section 5.5.5. Each sampling point shall be sufficiently identified on a site map to allow return to the exact location upon project completion.

4. Each sample shall be split in two portions, one for immediate analysis and the other sealed, preserved and furnished to the Engineer. The samples shall be analyzed in accordance with EPA Method 3050, "Acid Digestion of Sediments, Sludges and Soils", and shall be performed by a qualified laboratory approved by the Engineer.

5. Samples shall be obtained at the completion of work (post-construction samples) from all locations from which pre-construction samples were obtained. Samples shall be collected, handled and tested in the same manner as described above.

6. Upon completion of the work, soils found to be contaminated with lead in greater quantity than found in the background "base level", established at the start of the work, shall be removed by the Contractor to the depth necessary to achieve a lead content equivalent to, or below, the pre-construction back ground levels. Disposal shall be in accordance with applicable regulations.

7. The Contractor shall replace in-kind (i.e., topsoil, structural fill, etc.) with an equivalent amount of non-contaminated soil, compact in place and grade to pre-existing conditions. The Contractor shall also replace in-kind any surface improvements, such as grass, shrubs, etc. that were damaged or destroyed by the work. The soil removal, replacement and related work is to be performed by the Contractor at no additional cost to the Owner.

## 3.02 WORKER PROTECTION

A. The Contractor shall develop a written Compliance Program to establish and implement practices and procedures for assuring that no employee is exposed to lead at concentrations greater than 50 micrograms per cubic meter of air ($\mu g/m^3$), the OSHA permissible exposure limit (PEL). This program is in addition to other OSHA hazard communication and safety and health requirements of the project, and shall be revised and updated at least every six months.

1. The program shall establish methods for complying with this specification and the OSHA Construction Industry Lead Standard, 29 CFR 1926.62(e)(2)(ii). The Federal regulation is referred to as the "Lead

Standard" for the purpose of this specification.

2. The program shall apply to all Contractor employees associated with lead on the project, and to subcontractors working under the direct control of the Contractor who are associated with lead on the project.

3. The program shall assign the specific responsibility for implementation and enforcement of the program to the Contractors' company management. The Contractor's Competent Person(s) shall be identified, by name, and qualifications submitted. The Competent Person shall be on-site during any operations which involve the removal, handling or disturbing of lead containing materials.

4. The program shall contain a description of each activity in which lead is emitted (e.g. equipment used, material involved, controls in place, crew size, employee job responsibilities, operating procedures and maintenance practices).

5. The program shall contain a report of the technology considered in meeting the PEL and air monitoring data which documents the source of lead emissions.

6. The program shall contain a work practice program which includes items required in the lead standard such as protective clothing and equipment, housekeeping, and hygiene facilities and practices.

B. Exposure Monitoring: The Contractor shall be responsible for conducting and reporting worker exposure assessments in accordance with 29 CFR 1926.62.

1. Representative personal air samples shall be collected at the beginning of the lead removal work to determine employee lead exposures. Tasks involving potential lead exposure include, but are not limited to, paint removal operations, clean-up, and debris handling operations. Full shift (at least 7 hours) air samples shall be collected for each job classification in the exposure area. The range of exposures for lead removal and cleanup activities shall be determined.

2. During the initial monitoring, workers performing the following activities (or equivalent) shall be protected to the anticipated exposure levels which are dictated by the lead standard:

   a. 500 $\mu g/m^3$ : Manual demolition of structures containing lead-containing coatings or paint (e.g., dry wall), manual scraping, manual sanding, heat gun applications, power tool cleaning with dust collection systems, and spray painting with lead paint.

b. 2,500 $\mu g/m^3$ : Using lead-containing mortar, lead burning, or conducting the following activities where lead-containing coatings or paint are present: rivet busting, power tool cleaning without dust collection systems, clean-up activities where dry expendable abrasives are used, and the movement and removal of abrasive blasting enclosures.

c. More than 2,500 $\mu g/m^3$: Activities involving lead containing coatings or paint on structures disturbed by abrasive blasting, welding, cutting, and torch burning.

3. Protection requires compliance with the necessary respiratory protection, personal protective clothing and equipment, change areas and washing facilities, blood lead and zinc protoporphyrin monitoring, and employee training. The protection measures shall be modified, as necessary, after the exposure results are received.

4. Where initial monitoring indicates that lead exposures are below the Action Level, and where work activities and conditions remain the same as at the time of initial sampling, additional monitoring need not be repeated for that work activity.

5. Where the initial monitoring of a given work activity indicates that lead exposures are at or above the Action Level, additional exposure monitoring shall be conducted monthly. The monthly monitoring is more frequent than frequencies established in the lead standard which are at least every 6 months if above the Action Level, but below the PEL, or every 3 months if above the PEL.

6. All air samples shall be collected and analyzed according to NIOSH Method 7082, or equivalent. All samples shall be analyzed by laboratories accredited by the American Industrial Hygiene Association for metals analysis.

7. All exposed employees shall be notified in writing of the monitoring results within five (5) days after receiving the results.

8. The Action Level for airborne lead exposure is 30 $\mu g/m^3$, as an 8-hour time weighted average (TWA) concentration, without regard to the use of respirators. Whenever workers' airborne lead exposures exceed the Action Level, the Contractor shall implement the following:

   a. Periodic Exposure Monitoring
   b. Employee Information and Training

c. Employee Medical Surveillance and Medical Removal Protection
d. Housekeeping
e. Record keeping
f. Signs and Regulated Areas

9. The Permissible Exposure Limit (PEL) for airborne lead exposure is 50 $\mu g/m^3$, as an 8-hour TWA concentration. When the work area contains airborne lead levels above the PEL the Contractor shall implement the following in addition to those items listed in 3.02.B.8 of this section:

a. Compliance Program
b. Respiratory Protection
c. Protective Clothing and Equipment
d. Hygiene Facilities and Practices

C. Respiratory Protection: After feasible engineering controls and work practices have been implemented, respiratory protection shall be used to maintain employees' lead exposures below the PEL.

1. Respirators shall be worn by all employees, other Contractors, inspectors, or observers who enter regulated areas.

2. The Contractor shall develop a written Respiratory Protection Program in compliance with 29 CFR 1910.134, paragraphs (b), (d), (e), and (f), and the lead standard. The program shall address the selection, use, maintenance, and inspection of respirators, and qualifications for respirator users.

D. Protective Clothing and Equipment: The Contractor shall provide protective clothing and equipment and ensure they are worn by all employees whose lead exposures exceed the PEL, or who enter regulated areas.

1. Protective clothing shall include washable and/or disposable full body coveralls, gloves, foot coverings, and hoods. Other protective equipment shall include face shields, hard hats, eye protection, and hearing protection as appropriate.

2. Disposable protective clothing shall be used for no more than one work day. Such clothing may have to be disposed of as hazardous waste.

3. Reusable protective equipment shall be cleaned or replaced weekly if exposure levels are less than 200 $\mu g/m^3$, or daily if the exposure levels are greater than or equal to 200 $\mu g/m^3$.

4. Clothing shall not be removed or "cleaned" by any means which could reintroduce the lead dust into the ambient air. This includes brushing,

shaking, and blowing. Vacuums equipped with HEPA filters shall be used for this purpose.

5. Reusable coveralls shall be collected at the end of each work day in closed containers. The containers shall be labeled in accordance with the requirements of 29 CFR 1926.62(g)(2)(vii). Contaminated clothing shall be cleaned in accordance with all applicable Federal, State, or local regulations pertaining to lead-contaminated laundry and water discharge. Laundries shall be informed that the clothing contains lead. If the clothing is washed on site, the discharge water shall be filtered, containerized, and arrangements made with the local POTW or other approved means of proper disposal.

6. Protective clothing and equipment shall be removed in the contaminated section of the change area and shall not be worn into any clean areas.

7. The Contractor shall provide the necessary clothing and equipment for use by the Owner and its designated representatives.

E. Housekeeping: Accumulations of lead-containing dust and debris generated by work activities shall be removed and cleaned daily.

1. All persons doing the cleanup shall be trained in performing lead activities, respirator qualified, and participate in the medical surveillance program. Respirators and protective clothing shall be worn by all persons doing the cleanup.

2. Compressed air may be used for housekeeping if used within containment and in conjunction with a ventilation system designed to capture the dust. Otherwise, HEPA-filtered vacuum cleaners shall be employed.

3. All lead-containing dust and debris shall be collected in sealed containers. The waste shall be tested to determine whether it will be disposed of as hazardous waste.

F. Personal Hygiene Facilities and Practices

1. Clean change areas shall be provided when employees' lead exposures exceed the PEL. The change areas shall be equipped with storage facilities for street clothing and a separate area for the removal and storage of lead-contaminated clothing and equipment. They shall be designed and used so that contamination of street clothing does not occur. Employees shall not leave the project site wearing any clothing worn while performing lead activities. Airborne lead exposures in the change area shall be maintained below the Action Level.

2. Shower facilities shall be provided whenever employees' lead exposures exceed the PEL. Shower facilities shall comply with OSHA Sanitation Standard, 29 CFR 1929.51. All employees whose lead exposures exceed the PEL shall shower at the end of each work shift or before leaving the project area. The shower facilities shall be made available for use by the Owner and its representatives, such as inspectors or observers.

3. Arrangements shall be made with the local POTW for the proper disposal of the shower and wash water after filtration (e.g., through a three stage 100, 50, and 5 micron filtering system), ion exchange, or other approved treatment technology.

4. Clean lunch areas shall be provided for all employees whose lead exposures exceed the PEL. Employees shall remove or clean (by vacuuming) their protective clothing and wash their hands and face before entering the lunch area. Lead exposures in the lunch area shall be maintained as free as practicable from lead contamination.

5. An adequate number of clean lavatory and hand washing facilities shall be provided. These shall comply with the OSHA Sanitation Standard, 29 CFR 1929.51.

6. Eating, drinking, smoking, chewing of food or tobacco products, or the application of cosmetics shall not be permitted in any areas where the lead exposures exceed the PEL. Thorough washing of hands and face is required prior to undertaking any of these activities.

G. Medical Surveillance and Medical Removal Protection

1. All employees who are exposed to lead above the Action Level in a single day during this project shall be provided with initial and periodic medical examinations and blood lead tests as required by the lead standard. A final blood lead test shall be provided for each worker upon completion of the project, or at any time a worker's employment at the project ceases.

2. When blood lead levels over 50 µg/dl are encountered, the Contractor shall provide for the temporary removal of employees from lead exposure above the Action Level. The required medical surveillance and periodic blood lead tests shall be provided in strict accordance with the lead standard throughout the removal.

3. Employees who will be required to wear a respirator or who request one shall be provided with a respirator and the necessary medical examinations to determine their ability to wear a respirator.

4. All examinations shall be provided by the Contractor and shall be performed by or under the direct supervision of a licensed physician.

H. Employee Information and Training

1. The Contractor shall provide lead training for all employees who are exposed to lead above the Action Level for this project.

2. The content of lead training shall include, as a minimum, those items listed in the lead standard.

3. Training shall also include hazard communication in accordance with 29 CFR 1926.59.

4. The Contractor shall notify other employers at the project site of the nature of the lead exposure work, the need to remain out of exposure areas, the warning sign and labeling system in effect, and the potential need for them to take measures to protect their employees.

I. Signs and Regulated Areas

1. The Contractor shall establish a regulated area surrounding activities where lead exposures exceed the Action Level. This includes locations where lead-containing debris is handled or transferred to storage containers.

2. The regulated area shall be demarcated by ropes, tape, walls, or containment's with caution signs posted at all accessible sides. Signs shall contain the legend:

WARNING
LEAD WORK AREA
POISON
NO SMOKING OR EATING

3. The Contractor shall control access of persons into regulated areas. Access shall be limited to individuals with proper training and personal protective equipment, and medical surveillance testing.

4. All persons entering regulated areas shall wear protective clothing and respirators.

5. Eating, drinking, smoking, and chewing of food or tobacco products shall be prohibited in regulated areas and in any area where lead exposures exceed the Action Level.

J. Record keeping: All records relating to training, medical examinations, blood lead monitoring, and exposure monitoring shall be maintained by the Contractor as required by the lead standard. All records shall be available for review by the Owner or its representative upon request.

3.03 CERTIFIED INDUSTRIAL HYGIENIST (CIH)

A. The Contractor shall provide for the services of a Certified Industrial Hygienist (CIH) who must be certified by the American Board of Industrial Hygiene in comprehensive practice.

B. Duties of the CIH shall be as follows:

1. Conduct and/or verify training for contractor employees in accordance with 29 CFR 1926.62 (l).

2. Review and approve Contractor's Written Compliance Plan for conformance to 29 CFR 1926.62(e)(2)(ii) and this Specification.

3. Monitor and evaluate work weekly to assure conformance with the approved plan and that hazardous exposure is adequately controlled in accordance with worker safety and health requirements of these specifications

4. Provide monthly reports of work compliance with control requirements in regards to working in a lead environment.

C. Activities of the CIH shall include:

1. Meet with City to discuss details of Contractor's Written Compliance Plan for lead paint removal.

2. Ensure worker and area air monitoring, testing and reporting are conducted by or under the direction of the CIH.

3. Furnish a detailed worker and area air monitoring schedule coordinated with Contractor's proposed production schedule.

4. Directing, monitoring and inspecting lead paint removal work to ensure that the requirements of the Contract have been satisfied during the entire lead paint removal operation.

5. Report results of air monitoring samples to the Engineer, signed by the CIH within 48 hours after the air samples are taken.

6. The CIH shall review sampling data, collected on a day when lead paint

removal operations occur, to determine if conditions require any change in work methods. Removal work shall not continue until approval is given by the CIH.

7. The CIH shall verify in writing and submit monitoring data to verify that:

   a. Air borne lead levels at and beyond the lead control (regulated) area were and remained less than 30 $mg/m^3$ of air

   b. Contractor conformance to 29 CFR 1926.62 and Item 3.02, above

   c. There were no visible accumulations of lead contaminated paint, dust or debris on the work site. Adjacent areas that may have become contaminated were properly cleaned and inspected.

   d. The CIH shall verify that the work area and contractor's equipment have been adequately cleaned of lead contamination prior to demobilization from the work site.

## 3.04 DEMOBILIZATION

The Contractor shall not remove the lead control area, boundaries, warning signs, etc. prior to proper removal of all hazardous wastes, debris and materials from the site and the City's receipt and acceptance of the CIH's verification.

END OF SECTION

Section 01410

# TPDES REQUIREMENTS

## 1.01 SECTION INCLUDES

A. Documentation to be prepared and signed by Contractor/Operator before conducting construction operations, in accordance with the Texas Pollutant Discharge Elimination System (TPDES) Construction General Permit Number TXR 150000 issued February 15, 2008 (the Construction General Permit).

B. Implementation, maintenance inspection, and termination of storm water pollution prevention control measures including, but not limited to, erosion and sediment controls, storm water management plans, waste collection and disposal, off-site vehicle tracking, and other appropriate practices shown on the Drawings or specified elsewhere in the Contract.

C. Review of the Storm Water Pollution Prevention Plan (SWP3) implementation in a meeting with Project Manager prior to start of construction.

## 1.02 DEFINITIONS

A. Commencement of Construction Activities: The exposure of soil resulting from activities such as clearing, grading, and excavation activities, as well as other construction related activities (e.g., stock piling of fill material, demolition).

B. Large Construction Activity: Project that:o

1. disturbs five acres or more, or

2. disturbs less than five acres but is part of a larger common plan of development that will disturb five acres or more of land.

C. Small Construction Activity: Project that:

1. disturbs one or more acres but less than five acres, or

2. disturbs less than one acre but is part of a larger common plan of development that will ultimately disturb one or more acres but less than five acres.

D. TPDES Operator:

**Operator -** The person or persons associated with a large or small construction activity that is either a primary or secondary as defined below:

**Primary Operator** – the person or persons associated with a large or small construction activity that meets either of the following two criteria:

(a) the persons have operational control over construction plans and specifications, including the ability to make modifications to those plans and specifications; or

(b) the person or persons have day-to-day operational control of those activities at a construction site that are necessary to ensure compliance with a storm water pollution prevention plan (SWP3) for the site or other permit conditions (e.g., they are authorized to direct workers at a site to carry out activities required by the SWP3 or comply with other permit conditions).

**Secondary Operator** – The person whose operational control is limited to the employment of other operators or to the ability to approve or disapprove changes to plans and specifications. A secondary operator is also defined as a primary operators if there are no other operators if there are no other operators at the construction site.

PART 2 P R O D U C T S - Not Used

PART 3 E X E C U T I O N

3.01 SITE SPECIFIC STORM WATER POLLUTION PREVENTION PLAN (SWP3)

A. Prepare a SWP3 following Part III of the Construction General Permit and the Storm Water Management Handbook for Construction Activities issued under City Ordinance Section 47-695(b). If conflicts exist between the Construction General Permit and the handbook, the more stringent requirements will apply.

B. Update or revise the SWP3 as needed during the construction following Part III, Section E of the Construction General Permit.

C. Submit the SWP3 and any updates or revisions to Project Manager for review and address comments prior to commencing, or continuing, construction activities.

3.02 NOTICE OF INTENT For Large Construction Activity

A. Fill out, sign, and date TCEQ Form 20022 (03/05/2008) Notice of Intent (NOI) for Storm Water Discharges Associated with Construction Activity under the TPDES Construction General Permit (TXR 150000), **ATTACHMENT 1** of this Section 01410.

B. Transmit the signed Contractor's copy of TCEQ Form 20022 (03/05/2008), along with a $325.00 check, made out to Texas Commission on Environmental Quality, and the completed Payment Submittal Form to Project Manager.

C. Project Manager will complete a separate TCEQ Form 20022 (03/05/2008) for City's Notice of Intent, and will submit both Notices, along with checks for application fees, to the TCEQ.

D. Submission of the Notice of Intent form by both the City and Contractor to TCEQ if mailing is required a minimum of seven days before Commencement of Construction Activities.

3.03 CONSTRUCTION SITE NOTICE FOR SMALL CONSTRUCTION ACTIVITY

A. Fill out, sign, and date the Construction Site Notice, Attachment 2 to TPDES General Permit TXR 150000, "Construction Site Notice", **ATTACHMENT 2** of this Section 01410.

B. Transmit the signed Construction Site Notice to Project Manager at least seven days prior to Commencement of Construction Activity.

3.04 CERTIFICATION REQUIREMENTS

A. Fill out TPDES Operator's Information form, **ATTACHMENT 3** of this Section 01410, including Contractor's name, address, and telephone number, and the names of persons or firms responsible for maintenance and inspection of erosion and sediment control measures. Use multiple copies as required to document full information.

B. Contractor and Subcontractors shall sign and date the Contractor's / Subcontractor's Certification for TPDES Permitting, **ATTACHMENT 4** of this Section 01410. Include this certification with other Project certification forms.

C. Submit properly completed certification forms to Project Manager for review before beginning construction operations.

D. Conduct inspections in accordance with TCEQ requirements. Ensure persons or firms responsible for maintenance and inspection of erosion and sediment control measures read, fill out, sign, and date the Erosion Control Contractor's Certification for Inspection and Maintenance. Use the City of Houston Storm Water Pollution Prevention Plan, Construction Site Inspection Report, **ATTACHMENT 5** of this Section 01410 to record maintenance inspections and repairs.

3.05 RETENTION OF RECORDS

A. Keep a copy of this document and the SWP3 in a readily accessible location at the construction site from Commencement of Construction Activity until submission of the Notice of Termination (NOT) for Storm Water Discharges Associated with Construction Activity under TPDES Construction General Permit (TXR 150000). Contractors with day-to-day operational control over SWP3 implementation shall have a copy of the SWP3 available at a central location, on-site, for the use of all operators and those identified as having responsibilities under the SWP3. Upon submission of the NOT, submit all required forms and a copy of the SWP3 with all revisions to Project Manager.

## 3.06 REQUIRED NOTICES

A. Post the following notices from effective date of the SWP3 until date of final site stabilization as defined in the Construction General Permit:

1. Post the TPDES permit number for Large Construction Activity, with a signed TCEQ Construction Site Notice for large or Small Construction Activity. Signed copies of the City's and Contractor's NOI must also be posted.

2. Post notices near the main entrance of the construction site in a prominent place where it is safely and readily available for viewing by General Public, Local, State, and Federal Authorities. Post name and telephone number of Contractor's local contact person, brief project description and location of the SWP3.

    a. If posting near a main entrance is not feasible due to safety concerns, coordinate posting of notice with Project Manager to conform to requirements of the Construction General Permit.

    b. If Project is a linear construction project (e.g.: road, utilities, etc.), post notice in a publicly accessible location near active construction. Move notice as necessary.

3. Post a notice to equipment and vehicles operators, instructing them to stop, check, and clean tires of debris and mud before driving onto traffic lanes. Post at each stabilized construction access area.

4. Post a notice of waste disposal procedures in a readily visible location on site.

## 3.07 ON-SITE WASTE MATERIAL STORAGE

A. On-site waste material storage shall be self-contained and shall satisfy appropriate local, state, and federal rules and regulations.

B. Prepare list of waste material to be stored on-site. Update list as necessary to include up-to-date information. Keep a copy of updated list with the SWP3.

C. Prepare description of controls to reduce pollutants generated from on-site storage. Include storage practices necessary to minimize exposure of materials to storm water, and spill prevention and response measures consistent with best management practices. Keep a copy of the description with the SWP3.

3.08 NOTICE OF TERMINATION

A. Submit a NOT, **ATTACHMENT 7** of this Section 01410, to Project Manager within 30 days after:

1. Final stabilization has been achieved on all portions of the site that are the responsibility of the Contractor; or

2. Another operator has assumed control over all areas of the site that have not been stabilized; and

3. All silt fences and other temporary erosion controls have either been removed, scheduled to be removed as defined in the SWP3, or transferred to a new operator if the new operator has sought permit coverage.

B. Project Manager will complete City's NOT and submit Contractor and City's notices to the TCEQ and MS4 entities.

END OF SECTION

PAGE LEFT INTENTIONALLY BLANK

# ATTACHMENT 1

TCEQ

## Notice of Intent (NOI) for Storm Water Discharges Associated with Construction Activity under the TPDES Construction General Permit (TXR150000)

For help completing this application, read the TXR150000 NOI Instructions (TCEQ-20022-Instructions).

**TCEQ Office Use Only**
TPDES Permit Number: TXR15 __|__|__|__| - NO
GIN Number: |_|_|_|_|_|_|_|_|

**A. Construction Site Operator** ☐New ☐No Change Customer Reference Number: CN_____
Name:_____
Mailing Address:_____ City:_____ State:____ Zip Code:_____
Country Mailing Information (*if outside USA*) Territory:_____ Country Code:_____ Postal Code:_____
Phone Number:_____ Extension:_____ Fax Number:_____
E-mail Address:_____
Type of Operator: ☐ Individual ☐ Sole Proprietorship - D.B.A. ☐ Partnership ☐ Corporation ☐ Federal Government
☐ State Government ☐ County Government ☐ City Government ☐ Other:_____
Independent Operator? ☐ Yes ☐ No Number of Employees: ☐ 0-20 ☐ 21-100 ☐ 101-250 ☐ 251-500 ☐ 501 or higher
Federal Tax ID:_____ State Franchise Tax ID Number:_____ DUNS Number:_____

**B. Billing Address**
Name:_____
Mailing Address:_____ City:_____ State:____ Zip Code:_____
Country Mailing Information (*if outside USA*) Territory:_____ Country Code:_____ Postal Code:_____

**C. Project / Site Information** ☐New ☐No Change Regulated Entity Reference Number: RN_____
Name:_____
Mailing Address:_____ City:_____ State:____ Zip Code:_____
Physical Address:_____ City:_____ County:_____ Zip Code:_____
Location Access Description:_____
Latitude:___°___'___" N Longitude:___°___'___" W Degrees (°), Minutes ('), and Seconds (")
Latitude:_____ Longitude: -_____ Decimal Form
Standard Industrial Classification (SIC) code:_____ Also, describe the construction activity at this site *(do not repeat the SIC code)*:
_____
Has a storm water pollution prevention plan been prepared as specified in the general permit (TXR150000)? ☐ Yes ☐ No
Estimated area of land disturbed (to the nearest acre):_____ Is the project / site located on Indian Country Lands? ☐ Yes ☐ No
Does this project / site discharge storm water into a municipal separate storm sewer system (MS4)? ☐ Yes ☐ No
If yes, provide the name of the MS4 operator:_____
Provide the name or segment number of the water body that receives storm water from this project / site:_____

**D. Contact** - If the TCEQ needs additional information regarding this application, who should be contacted?
Name:_____ Title:_____
Phone Number:_____ Extension:_____ Fax Number:_____
E-mail Address:_____

**E. Payment Information** - Check / Money Order Number:_____ Name on Check / Money Order:_____

**F. Certification**
I certify under penalty of law that this document was prepared under my direction or supervision in accordance with a system designed to assure that qualified personnel properly gather and evaluate the information submitted. Based on my inquiry of the person or persons who manage the system, or those persons directly responsible for gathering the information, the information submitted is, to the best of my knowledge and belief, true, accurate, and complete. I am aware there are significant penalties for submitting false information, including the possibility of fine and imprisonment for knowing violations.
**Construction Site Operator:**
Prefix:_____ First:_____ Middle:_____
Last:_____ Suffix:_____ Title:_____
Signature:_____ Date:_____

If you have questions on how to fill out this form or about the storm water program, please contact us at (512) 239-4671.
Individuals are entitled to request and review their personal information that the agency gathers on its forms. They may also have any errors in their information corrected. To review such information, contact us at (512) 239-3282.

The completed NOI must be mailed to the following address. Use the attached document to submit the $100 application fee. Please note that the NOI and application fee are submitted separately to different addresses.

**Texas Commission on Environmental Quality**
**Storm Water & General Permits Team; MC - 228**
**P.O. Box 13087**
**Austin, Texas 78711-3087**

TCEQ-20022 (05/03) Page 1 of 2

# ATTACHMENT 1

## Texas Commission on Environmental Quality
## Payment Submittal Form

The storm water application fee shall be sent under separate cover to the Texas Commission on Environmental Quality.

This form must be used to submit your Storm Water Application Fee. Please complete the following information, staple your check in the space provided at the bottom of this document, and mail it to:

**BY REGULAR U.S. MAIL**

Texas Commission on Environmental Quality
Financial Administration Division
Cashier's Office, MC-214
P.O. Box 13088
Austin, TX 78711-3088

**BY OVERNIGHT/EXPRESS MAIL**

Texas Commission on Environmental Quality
Financial Administration Division
Cashier's Office, MC-214
12100 Park 35 Circle
Austin, TX 78753

---

Fee Code: GPA

Storm Water General Permit: TXR150000

Check / Money Order No: _____

Amount of Check/Money Order: _____

Date of Check or Money Order: _____

Name on Check or Money Order: _____

Facility / Site Name: _____

Facility / Site Physical Address: _____

City: _____ Zip Code: _____

**Staple Check In This Space**

# ATTACHMENT 1

## Completing the Notice of Intent for Storm Water Discharges Associated with Construction Activity under the TPDES Construction General Permit (TXR150000)

### A. Construction Site Operator Information

**Check boxes and Customer Reference Number**
These boxes designate the operator's status as a TCEQ "customer"—in other words, an individual or business that is involved in an activity that we regulate. We assign each customer a number that begins with "CN," followed by nine digits. ***This is not a permit number, registration number, or license number.*** In the remainder of this section, we will use "this customer" to mean the operator for Part A of the form.

- If this customer has not been assigned a Customer Reference Number or if this number is unknown, check "New" and leave the space for the Customer Reference Number blank.
- If this customer has already been assigned this number, enter the operator's Customer Reference Number and:
  - Check "No Change" if all the remaining customer information is the same as previously reported. However, you must still complete most blanks in this form for this notice of intent to be valid.
  - If this customer's information has changed since the last time it was reported to the TCEQ, check neither box and complete the remainder of this notice of intent.
- ***Do not enter a permit number, registration number, or license number in place of the Customer Reference Number.***

**Name**
Enter the legal name of this customer as authorized to do business in Texas. Include any abbreviations (LLC, Inc., etc.).

**Mailing Address**
Enter a central and general mailing address for this customer to receive mail from the TCEQ. For example, if this customer is a large company, this address might be the corporate or regional headquarters. On the other hand, for a smaller business, this address could be the same as the site address.

***If this is a street address, please follow US Postal Service standards.*** In brief, these standards require this information in this order:

- the "house" number—for example, the 1401 in 1401 Main St
- if there is a direction before the street name, the one- or two-letter abbreviation of that direction (N, S, E, W, NE, SE, SW, or NW)
- the street name (if a numbered street, do not spell out the number—for example, 6th St, not Sixth St)
- an appropriate abbreviation of the type of street—for example, St, Ave, Blvd, Fwy, Exwy, Hwy, Cr, Ct, Ln
- if there is a direction after the street name, the one- or two-letter abbreviation of that direction (N, S, E, W, NE, SE, SW, or NW)
- if there is a room number, suite number, or company mail code

**City, State, *and* ZIP Code**
Enter the name of the city, the two-letter USPS abbreviation for the state (for example, TX), and the ZIP Code. (Enter the full ZIP+4 if you know it.)

**Country Mailing Information**
If this address is ***outside*** the United States, enter the territory name, country code, and any non-ZIP mailing codes or other non–U.S. Postal Service features here. If this address is ***inside*** the United States, leave these spaces blank.

**Phone Number *and* Extension**
This number should correspond to this customer's mailing address given earlier. Enter the area code and phone number here. Leave "Extension" blank if this customer's phone system lacks this feature.

**Fax Number**
This number should correspond to this customer's mailing address given earlier. Enter the area code and fax number here.

**E-mail Address**
As with the mailing address, this should be a general address that is appropriate for e-mail to this customer's central or regional headquarters, if applicable.

***If "No Change" was checked for this customer, you may skip the rest of the fields in this part of the form and continue to the next part of the NOI.***

**Type of Operator**
Check *only one* box.

| *Check ...* | *if this customer ...* |
|---|---|
| Individual | is a person and has not established a business to do whatever causes them to be regulated by us. |
| Sole Proprietorship—D.B.A. | is a business that is owned by only one person and has not been incorporated. This business may:<br>• be under the person's name<br>• have its own name ("doing business as," or d.b.a.)<br>• have any number of employees |
| Partnership | is a business that is established as a partnership as defined by the Texas Secretary of State's Office |
| Corporation | meets all of these conditions:<br>• is a legally incorporated entity under the laws of any state or country<br>• is recognized as a corporation by the Texas Secretary of State<br>• has proper operating authority to operate in Texas |
| Federal, state, county, or city government (as appropriate) | is either an agency of one of these levels of government or the governmental body itself (If a utility district, water district, tribal government, college district, council of governments, or river authority, check "Other" and write in the specific type of government.) |
| Other | fits none of the above descriptions. Enter a short description of the type of customer in the blank provided. |

**Independent Operator?**
Check "No" if this customer is a subsidiary or part of a larger company. Otherwise, check "Yes."

**Number of Employees**
Check one box to show the number of employees for this customer's entire company, at all locations. ***This is not necessarily the number of employees at the site named in this NOI.***

**Federal Tax ID**
All businesses, except for some small sole proprietors, should have a federal taxpayer identification number (TIN). Enter this number here. Use no prefixes, dashes, or hyphens. Individuals and sole proprietors do not need to provide a federal tax ID.

**State Franchise Tax ID**
Corporations and limited liability companies that operate in Texas are issued a franchise tax identification number. If this customer is a corporation or limited liability company, enter this number here.

**DUNS Number**
Most businesses have a DUNS (Data Universal Numbering System) number issued by Dun and Bradstreet Corp. If this customer has one, enter it here.

### B. Billing Address

We will mail the annual fee invoice for this site to the address entered in this section.

**Name**
Enter the legal name of the person or business to which we should mail this site's fee invoice each year.

**Mailing Address**
Enter the specific mailing address to which we should mail this site's fee invoice each year. If this is a street address, please follow the US Postal Service standards as described under "A. Construction Site Operator Information" on page 1 of these instructions.

**City, State, *and* ZIP Code**
Enter the name of the city, the two-letter USPS abbreviation for the state (for example, TX), and the ZIP Code. (Enter the full ZIP+4 if you know it.)

**Country Mailing Information**
If this address is ***outside*** the United States, enter the territory name, country code, and any non-ZIP mailing codes or other non–U.S. Postal

# ATTACHMENT 1

Service features here. If this address is ***inside*** the United States, leave these spaces blank.

## C. Project / Site Information

**Check boxes *and* Regulated Entity Reference Number**
These boxes designate this site's status as a TCEQ "regulated entity"—in other words, a location where an activity that we regulate occurs. We assign each regulated entity a number that begins with "RN," followed by nine digits. ***This is not a permit number, registration number, or license number.***

- If this site has not been assigned a Regulated Entity Reference Number or if this number is unknown, check "New" and leave the space for the Regulated Entity Reference Number blank.
- If this site has already been assigned this number, enter the Regulated Entity Reference Number and:
  - Check "No Change" if all the remaining information is the same as previously reported. However, even if there has been no change, you must complete this section at least through "E-mail Address" for this NOI to be valid.
  - If this site's information has changed since the last time it was reported to the TCEQ, check neither box and complete the remainder of this notice of intent.
- ***Do not enter a permit number, registration number, or license number in place of the Regulated Entity Reference Number.***

**Name**
Enter the name by which you want this site to be known to the TCEQ.

**Mailing Address**
Enter the specific mailing address for this site. If this is a street address, please follow the US Postal Service standards as described under "A. Construction Site Operator Information" on page 1 of these instructions. If the project / site's mailing address is the same as what is provided in Section A, you may enter "Same as Section A".

**City, State, *and* ZIP Code**
Enter the name of the city, the two-letter USPS abbreviation for the state (for example, TX), and the ZIP Code. (Enter the full ZIP+4 if you know it.)

**Physical Address**
Enter the physical address of the site itself. TCEQ staff should be able to use this address to find the site. Please follow the US Postal Service standards as described under "A. Construction Site Operator Information" on page 1 of these instructions. If the project / site does not have a physical address, enter "No Address".

**City, County, *and* ZIP Code**
Enter the name of the city, the county, and the ZIP Code. (Enter the full ZIP+4 if you know it.) This information must be provided even if you have entered "No Address" in the previous field.

**Location Access Description**
Enter a physical description of the location of the site based on highway intersections and/or permanent landmarks.

**Latitude *and* Longitude**
Enter the latitude and longitude of the site in ***either*** degrees, minutes, and seconds ***or*** decimal form.

For help obtaining the latitude and longitude, go to:
**http://www.tnrcc.state.tx.us/gis/drgview.html**

**Standard Industrial Classification (SIC) Code and Activity Description**

Provide the SIC code that best describes the construction activity being conducted at the site.

For help with SIC codes, go to:
**http://www.osha.gov/oshstats/sicser.html**

In addition to the SIC code, you must also provide a description of the construction activity being conducted at the site. This may include such descriptions as: "Apartment Building Construction" or "Shopping Center Construction."

**Storm Water Pollution Prevention Plan**
This plan identifies the areas and activities that could produce contaminated runoff at your site and then tells how you will ensure that this contamination is mitigated. For example, in describing your mitigation measures, your site's plan might identify the devices that collect and filter storm water, tell how those devices are to be maintained, and tell how frequently that maintenance is to be carried out. ***You must develop this plan before you complete this NOI.*** This plan must be available for a TCEQ investigator to review on request. Specific requirements for the development of the plan can be found in the *Texas Pollutant Discharge Elimination System Construction General Permit (TXR150000)*.

**Estimated Area of Land Disturbed**
Provide the approximate number of acres that the construction site will disturb. It is appropriate to enter a value less than 5, only if the project is part of a larger common plan that disturbs five or more acres. If the acreage is less than 1, enter 1. "Disturb" means any clearing, grading, excavating, or other similar activities.

**Is the site located on Indian Country Lands?**
Check "Yes" only if the site is on a reservation or other areas designated by the federal government as Indian Country Lands. If not, check "No."

**Destination of Storm Water Discharge**
The storm water from your site eventually reaches a receiving water body such as a local stream or lake, possibly via a drainage ditch. The discharge may initially be into a municipal separate storm sewer system (MS4). Check the appropriate boxes for whether storm water is discharged into an MS4. If you checked "Yes" to "An MS4?", then enter the name of the entity that operates the storm sewer—often a city, town, or utility district, but possibly another form of government.

You must also provide the name of the water body that receives the discharge from the construction site (a local stream or lake). Storm water may be discharged directly to a receiving stream or via a storm sewer system. If known, please include the segment number if the discharge is to a classified water body.

For a map that includes segment numbers, go to:
**http://www.tnrcc.state.tx.us/water/quality/data/index.html**

## D. Contact

Give all the relevant information for the person whom TCEQ can contact if there are questions about any of the information on this form—perhaps the same person who completed the form.

## E. Payment Information

Provide the number and account holder name from the check or money order used to pay the $100 application fee.

## F. Certification

The operator must sign and date this statement to validate this NOI. Be sure to enter the full legal name of the person signing the form and the relevant title—for example, "Operator," "Vice-President," or "Partner." Use the "Prefix" blank for such titles as Dr., Mr., or Ms., as desired. Use the "Suffix" blank for such designations as Ph.D., Jr., Sr., III, or J.D., if applicable.

For a corporation, the application shall be signed by a responsible corporate officer. A responsible corporate officer means a president, secretary, treasurer, or vice-president of the corporation in charge of a principal business function, or any other person who performs similar policy or decision-making functions for the corporation; or the manager of one or more manufacturing, production, or operating facilities employing more than 250 persons or having gross annual sales or expenditures exceeding $25 million (in second-quarter 1980 dollars), if authority to sign documents has been assigned or delegated to the manager in accordance with corporate procedures. Corporate procedures governing authority to sign permit applications may provide for assignment or delegation to applicable corporate positions rather than to specific individuals.

For a partnership or sole proprietorship, the application shall be signed by a general partner or the proprietor, respectively.

For a municipality, state, federal, or other public agency, the application shall be signed by either a principal executive officer or a ranking elected official. For purposes of this application, a principal executive officer of a federal agency includes the chief executive officer of the agency, or a senior executive officer having responsibility for the overall operations of a principal geographic unit of the agency (e.g. regional administrator of the United States Environmental Protection Agency).

## Questions?

If you have questions about any of the information on this form, contact our Storm Water Program at 512/239-4671 or look for "Storm Water" on our Web site.

**www.tceq.state.tx.us**

**ATTACHMENT 2**

# CONSTRUCTION SITE NOTICE

**FOR THE**
**Texas Commission on Environmental Quality (TCEQ)**
**Storm Water Program**

## TPDES GENERAL PERMIT TXR150000

The following information is posted in compliance with **Part II.D.2.** of the TCEQ General Permit Number TXR150000 for discharges of storm water runoff from construction sites. Additional information regarding the TCEQ storm water permit program may be found on the internet at:
www.tnrcc.state.tx.us/permitting/waterperm/wwperm/tpdestorm

| | |
|---|---|
| Contact Name and Phone Number: | |
| Project Description:<br><br>(Physical address or description of the site's location, estimated start date and projected end date, or date that disturbed soils will be stabilized) | |
| Location of Storm Water Pollution Prevention Plan : | |

For Construction Sites Authorized Under Part II.D.2. (Obtaining Authorization to Discharge) the following certification must be completed:

I _____ (Typed or Printed Name Person Completing This Certification) certify under penalty of law that I have read and understand the eligibility requirements for claiming an authorization under Part II.D.2. of TPDES General Permit TXR150000 and agree to comply with the terms of this permit. A storm water pollution prevention plan has been developed and implemented according to permit requirements. A copy of this signed notice is supplied to the operator of the MS4 if discharges enter an MS4 system. I am aware there are significant penalties for providing false information or for conducting unauthorized discharges, including the possibility of fine and imprisonment for knowing violations.

_____ _____
Signature and Title Date

PAGE LEFT INTENTIONALLY BLANK

## ATTACHMENT 3

# TPDES OPERATOR'S INFORMATION

Owner's Name and Address: City of Houston

Mr. _____
(City Official)

_____
(Department)
P. O. Box 1562
Houston, Texas 77251-1562
(713) 247-1000

Contractors' Names and Addresses:

General Contractor: _____

Telephone: _____

Site Superintendent: _____

Telephone: _____

Erosion Control and Maintenance Inspection: _____

Telephone: _____

Subcontractors' Names and Addresses:

_____ _____

Phone: _____ Phone: _____

**Note: Insert name, address, and telephone number of person or firms**

PAGE LEFT INTENTIONALLY BLANK

## ATTACHMENT 4

## CONTRACTOR'S / SUBCONTRACTOR'S

# CERTIFICATION FOR TPDES PERMITTING

I certify under penalty of law that I understand the terms and conditions of TPDES General Permit No. TXR150000 and the Storm Water Pollution Prevention Plan for the construction site identified as part of this certification.

Signature: _____

Name: (printed or typed) _____

Title: _____

Company: _____

Address: _____

Date: _____

Signature: _____

Name: (printed or typed) _____

Title: _____

Company: _____

Address: _____

Date: _____

Signature: _____

Name: (printed or typed) _____

Title: _____

Company: _____

Address: _____

Date: _____

PAGE LEFT INTENTIONALLY BLANK

ATTACHMENT 5

# EPA NPDES Construction Inspection Form

The following inspection is being performed in compliance with Part IV.D.4. of the NPDES Region 6 Storm Water Construction General Permit [63 Fed. Reg. 36502] and being retained in accordance with Part V of the Permit. Qualified personnel (provided by the permittee or cooperatively by multiple permittees) shall inspect disturbed areas of the construction site that have not been finally stabilized, areas used for storage of materials that are exposed to precipitation, placement and effectiveness of structural control measures, and locations where vehicles enter or exit the site. Inspections shall be performed at least once every 14 days and within 24 hours of the end of a storm event of 0.5 inches or greater. Where sites have been temporarily stabilized, runoff is unlikely due to winter conditions, or during seasonal arid periods in arid areas (0-10 inches of rainfall annually) and semi-arid areas (10-20 inches annually) such inspections shall be conducted at least once every month. This form is primarily intended for use with construction projects in Texas and New Mexico. Permittees on Indian Country lands in Oklahoma, Louisiana and Arkansas and some oil and gas facilities in Oklahoma may use this form if they are eligible for this permit. Other facilities need to check with their NPDES authority before using this form.

If you do not know your NPDES Permit Number, contact the NOI Processing Center at (301)495-4145. This form was prepared as an example and it is not a required form for use with the permit. Alternative forms may be used if they contain all of the required information as set forth in the permit. This form and additional information regarding the NPDES Region 6 storm water program may be found on the Internet at http://www.epa.gov/region6/sw/. Any person with a complaint about the operation of this facility in regards to this permit should contact EPA Region 6 at (214)665-7112.

| | |
|---|---|
| Permit Number(s) covered by this inspection (e.g. owners, developers, general contractor, builders) | |
| Signature and Certification in accordance with Part VI.G of the permit: | I certify under penalty of law that this document and all attachments were prepared under my direction or supervision in accordance with a system designed to assure that qualified personnel properly gathered and evaluated the information submitted. Based on my inquiry of the person or persons who manage the system, or those persons directly responsible for gathering the information, the information submitted is, to the best of my knowledge and belief, true, accurate, and complete. I am aware that there are significant penalties for submitting false information, including the possibility of fine and imprisonment for knowing violations.<br><br>Signature_____Date_____ |
| Date of Inspection | |
| Inspector Name | |
| Is there a copy of the permit language with the SWPPP? | ❒ YES ❒ NO |
| Is the inspector qualified and are the qualifications documented in the SWPPP? | ❒ YES ❒ NO |
| Is an NPDES storm water construction sign posted at the entrance for all permittees? | ❒ YES ❒ NO |

You may want to use EPA Region 6 construction checklist to assure components of the SWPPP are complete. This form, the construction sign, and the checklist are available on the Region 6 NPDES Storm Water Forms and Documents web page which may be found on the internet at http://www.epa.gov/earth1r6/6en/w/formsw.htm In addition to the checklist, you should provide a narrative (see next page) on the existing Best Management Practices and Structural Controls found during each inspection. Any problems identified in an inspection should be corrected within 7 days. The inspection should cover all components of the SWPPP and all potential pollutants. While eroded soil is the primary pollutant of concern, do not forget to inspect for other pollutant sources such as fuel tanks, paints, solvents, stabilization materials, concrete hardner, batch plants, and construction debris. The inspector will need to update the SWPPP to reflect findings of the inspection. The site map should be updated after an inspection to show controls that have been added or removed, to ensure the site map is kept current in accordance with Part IV.C. of the permit.

Revision 4, March 1, 2000

## ATTACHMENT 5

Narrative Findings of the inspection:

Observations should include any findings of Best Management Practices or controls that are not in accordance with the SWPPP. If a control is not in place or failed, observe the reason why. A control removed temporarily for work is not necessarily a violation if properly recorded in the SWPPP. If it has been removed, record why it was removed and, if applicable, when it will be reinstalled. If the control has failed, observe the conditions so a conclusion may be made as to wether the control failed for improper maintenance or improper design. The qualified inspector will know when a failed control is inadequate and should be replaced by an improved control mechanism. Qualified inspectors are to have authority to make changes to the SWPPP to assure compliance. Controls that have not been installed should be given a reason why they are not installed and/or a scheduled date for installation if they are designed for a later phase of construction. After the inspection, the SWPPP and its site map should be updated to reflect current conditions of controls and Best Management Practices at the time of the inspection. This includes removing uninstalled controls from the site map or otherwise denoting on the site map if they are no longer installed if the controls have been removed because they are no longer necessary (e.g. stabilization has been achieved in that area).

**ATTACHMENT 6**

# City of Houston

Storm Water Pollution Prevention Plan
Construction Site Inspection Report

TPDES/EPA Permit Number _____

COH Storm Water Quality Permit Number _____

DATE _____

No exceptions noted.

The following must be corrected prior to continuing work:

Public Notice improperly posted

Initial Construction Site Inspection Report information requires updating

Copy of NOI not on site

Storm water pollution prevention plan not on site

Erosion and sediment controls improperly installed

Erosion and sediment control devices improperly maintained

Fueling or washout areas not properly protected

Portocan or other sanitary facilities not properly protected

Self-inspection and maintenance records incomplete

Sediment from site outside area of construction

Other (see description below)

_____

_____

Please contact the Storm Water Quality Engineer at
611 Walker, RA-257, Houston TX 77002
713-837-7383 fax 713-837-0570

Once the above items have been corrected, call to arrange for reinspection. No further inspections for any construction related activity shall be made until the above items have been corrected.

| _____ | _____ |
|---|---|
| Inspector's Signature | Contractor's Signature |
| _____ | _____ |
| Inspector's Name | Contractor's Name |

not present

Distribution Stormwater Quality Engineer, Code Enforcement, Inspector, Operator
(Operator is Contractor)

Form _____ (10-01-01)

PAGE LEFT INTENTIONALLY BLANK

## ATTACHMENT 7

**Notice of Termination (NOT) for Storm Water Discharges Associated with Construction Activity under the TPDES Construction General Permit (TXR150000)**

TCEQ Office Use Only
TPDES Permit Number: TXR15__|__|__|__| - NO
GIN Number: __|__ __|__ __|__|__|

For help completing this application, read the TXR150000 NOI Instructions (TCEQ-20023-Instructions).

**A. TPDES Permit Number:** TXR15_____

**B. Construction Site Operator** Customer Reference Number: CN_____
Name:_____
Mailing Address:_____
City:_____ State: --_____ Zip Code:_____
Country Mailing Information (*if outside USA*) Territory:_____ Country Code:_____ Postal Code:_____
Phone Number:_____ Extension:_____ Fax Number:_____
E-mail Address:_____

**C. Project / Site Information** Regulated Entity Reference Number: RN_____
Name:_____
Physical Address:_____
Location Access Description:_____
City:_____ County: --_____ Zip Code:_____

**D. Contact** - If the TCEQ needs additional information regarding this termination, who should be contacted?
Name:_____ Title:_____
Phone Number:_____ Extension:_____ Fax Number:_____
E-mail Address:_____

**E. Certification**
I certify under penalty of law that authorization under the TPDES Construction General Permit (TXR150000) is no longer necessary based on the provisions of the general permit. I understand that by submitting this Notice of Termination, I am no longer authorized to discharge storm water associated with construction activity under the general permit TXR150000, and that discharging pollutants in storm water associated with construction activity to waters of the U.S. is unlawful under the Clean Water Act where the discharge is not authorized by a TPDES permit. I also understand that the submittal of this Notice of Termination does not release an operator from liability for any violations of this permit or the Clean Water Act.

**Construction Site Operator Representative:**

Prefix:_____ First:_____ Middle:_____
Last:_____ Suffix:_____
Title:_____

Signature:_____ Date:_____

If you have questions on how to fill out this form or about the storm water program, please contact us at (512) 239-4671. Individuals are entitled to request and review their personal information that the agency gathers on its forms. They may also have any errors in their information corrected. To review such information, contact us at (512) 239-3282.

The completed NOT must be mailed to the following address:

**Texas Commission on Environmental Quality**
**Storm Water & General Permits Team; MC - 228**
**P.O. Box 13087**
**Austin, Texas 78711-3087**

PAGE LEFT INTENTIONALLY BLANK

# ATTACHMENT 7

## Completing the Notice of Termination for Storm Water Discharges Associated with Construction Activity under the TPDES Construction General Permit (TXR150000)

**Who May File a Notice of Termination (NOT) Form**
Permittees disturbing 5 acres or more (or part of a larger common plan of development or sale disturbing 5 acres or more) who are presently covered under the Texas Pollutant Discharge Elimination System (TPDES) Construction General Permit must submit a Notice of Termination (NOT) when final stabilization has been achieved on all portions of the site that is the responsibility of the permittee; or another permitted operator has assumed control over all areas of the site that have not been finally stabilized and all silt fences and other temporary erosion controls have either been removed, scheduled for removal as defined in the SWP3, or transferred to a new operator if the new operator has sought permit coverage. Erosion controls that are designed to remain in place for an indefinite period, such as mulches and fiber mats, are not required to be removed or scheduled for removal.

**Final Stabilization** occurs when either of the following conditions are met:

(a) All soil disturbing activities at the site have been completed and a uniform (e.g, evenly distributed, without large bare areas) perennial vegetative cover with a density of 70% of the native background vegetative cover for the area has been established on all unpaved areas and areas not covered by permanent structures, or equivalent permanent stabilization measures (such as the use of riprap, gabions, or goetextiles) have been employed.

(b) For individual lots in a residential construction site by either:

(1) the homebuilder completing final stabilization as specified in condition (a) above; or

(2) the homebuilder establishing temporary stabilization for an individual lot prior to the time of transfer of the ownership of the home to the buyer and after informing the homeowner of the need for, and benefits of, final stabilization.

(c) For construction activities on land used for agricultural purposes (e.g. pipelines across crop or range land), final stabilization may be accomplished by returning the disturbed land to its preconstruction agricultural use. Areas disturbed that were not previously used for agricultural activities, such as buffer strips immediately adjacent to a surface water and areas which are not being returned to their preconstruction agricultural use must meet the final stabilization conditions of condition (a) above.

### A. TPDES Permit Number
Provide the TPDES permit number assigned to the operator of the construction site.

### B. Construction Site Operator Information
**Customer Reference Number**
This number designates the operator's status as a TCEQ "customer"—in other words, an individual or business that is involved in an activity that we regulate. We assign each customer a number that begins with "CN," followed by nine digits. ***This is not a permit number, registration number, or license number.*** In the remainder of this section, we will use "this customer" to mean the operator for Part B of the form.

- If this customer has not been assigned a Customer Reference Number, leave the space for the Customer Reference Number blank.
- If this customer has already been assigned this number, enter the operator's Customer Reference Number.
- ***Do not enter a permit number, registration number, or license number in place of the Customer Reference Number.***

**Name**
Enter the legal name of this customer as authorized to do business in Texas. Include any abbreviations (LLC, Inc., etc.).

**Mailing Address**
Enter a central and general mailing address for this customer to receive mail from the TCEQ. For example, if this customer is a large company, this address might be the corporate or regional headquarters. On the other hand, for a smaller business, this address could be the same as the site address.

***If this is a street address, please follow US Postal Service standards.*** In brief, these standards require this information in this order:

- the "house" number—for example, the 1401 in 1401 Main St
- if there is a direction before the street name, the one- or two-letter abbreviation of that direction (N, S, E, W, NE, SE, SW, or NW)
- the street name (if a numbered street, do not spell out the number—for example, 6th St, not Sixth St)
- an appropriate abbreviation of the type of street—for example, St, Ave, Blvd, Fwy, Exwy, Hwy, Cr, Ct, Ln
- if there is a direction after the street name, the one- or two-letter abbreviation of that direction (N, S, E, W, NE, SE, SW, or NW)
- if there is a room number, suite number, or company mail code

**City, State, *and* ZIP Code**
Enter the name of the city, the two-letter USPS abbreviation for the state (for example, TX), and the ZIP Code. (Enter the full ZIP+4 if you know it.)

# ATTACHMENT 7

**Country Mailing Information**
If this address is ***outside*** the United States, enter the territory name, country code, and any non-ZIP mailing codes or other non–U.S. Postal Service features here. If this address is ***inside*** the United States, leave these spaces blank.

**Phone Number *and* Extension**
This number should correspond to this customer's mailing address given earlier. Enter the area code and phone number here. Leave "Extension" blank if this customer's phone system lacks this feature.

**Fax Number**
This number should correspond to this customer's mailing address given earlier. Enter the area code and fax number here.

**E-mail Address**
As with the mailing address, this should be a general address that is appropriate for e-mail to this customer's central or regional headquarters, if applicable.

## C. Project / Site Information

**Regulated Entity Reference Number**
This number designates this site's status as a TCEQ "regulated entity"—in other words, a location where an activity that we regulate occurs. We assign each regulated entity a number that begins with "RN," followed by nine digits. ***This is not a permit number, registration number, or license number.***

- If this site has not been assigned a Regulated Entity Reference Number, leave the space for the Regulated Entity Reference Number blank.
- If this site has already been assigned this number, enter the Regulated Entity Reference Number.
- ***Do not enter a permit number, registration number, or license number in place of the Regulated Entity Reference Number.***

**Name**
Enter the name by which you want this site to be known to the TCEQ.

**Physical Address**
Enter the physical address of the site itself. TCEQ staff should be able to use this address to find the site.

**Location Description**
Enter a physical description of the location of the site based on highway intersections and/or permanent landmarks.

**City, County, *and* ZIP Code**
Enter the name of the city, the county, and the ZIP Code. (Enter the full ZIP+4 if you know it.)

## D. Contact

Give all the relevant information for the person whom TCEQ can contact if there are questions about any of the information on this form—perhaps the same person who completed the form.

## E. Certification

The operator must sign and date this statement to validate this NOI. Be sure to enter the full legal name of the person signing the form and the relevant title—for example, "Operator," "Operator's attorney," or "Senior Site Manager." Use the "Prefix" blank for such titles as Dr., Mr., or Ms., as desired. Use the "Suffix" blank for such designations as Ph.D., Jr., Sr., III, or J.D., if applicable.

For a corporation, the application shall be signed by a responsible corporate officer. A responsible corporate officer means a president, secretary, treasurer, or vice-president of the corporation in charge of a principal business function, or any other person who performs similar policy or decision-making functions for the corporation; or the manager of one or more manufacturing, production, or operating facilities employing more than 250 persons or having gross annual sales or expenditures exceeding $25 million (in second-quarter 1980 dollars), if authority to sign documents has been assigned or delegated to the manager in accordance with corporate procedures. Corporate procedures governing authority to sign permit applications may provide for assignment or delegation to applicable corporate positions rather than to specific individuals.

For a partnership or sole proprietorship, the application shall be signed by a general partner or the proprietor, respectively.

For a municipality, state, federal, or other public agency, the application shall be signed by either a principal executive officer or a ranking elected official. For purposes of this application, a principal executive officer of a federal agency includes the chief executive officer of the agency, or a senior executive officer having responsibility for the overall operations of a principal geographic unit of the agency (e.g. regional administrator of the United States Environmental Protection Agency).

## Questions?

If you have questions about any of the information on this form, contact our Storm Water Program at 512/239-4671 or look for "Storm Water" on our Web site:

**www.tceq.state.tx.us**

Section 01422

# REFERENCE STANDARDS

## PART 1 G E N E R A L

### 1.01 SECTION INCLUDES

A. Section includes general quality assurance as related to Reference Standards and a list of references.

### 1.02 QUALITY ASSURANCE

A. For Products or workmanship specified by association, trade, or Federal Standards, comply with requirements of the standard, except when more rigid requirements are specified or are required by applicable codes.

B. Conform to reference standard by date of issue current on the date as stated in the General Conditions.

C. Request clarification from Project Manager before proceeding should specified reference standards conflict with Contract documents.

### 1.03 SCHEDULE OF REFERENCES

| | |
|---|---|
| AASHTO | American Association of State Highway and Transportation Officials<br>444 North Capitol Street, N.W.<br>Washington, DC 20001 |
| ACI | American Concrete Institute<br>P.O. Box 9094<br>Farmington Hills, MI 48333-9094 |
| AGC | Associated General Contractors of America<br>333 John Carlyle Street<br>Alexandria, VA 22314 |
| AI | Asphalt Institute<br>Research Park Drive<br>P.O. Box 14052<br>Lexington, KY 40512 |

| | |
|---|---|
| AITC | American Institute of Timber Construction<br>7012 S. Revere Parkway, Suite 140<br>Englewood, CO 80112 |
| AISC | American Institute of Steel Construction<br>One East Wacker Dr.<br>Chicago, IL 60601 |
| AISI | American Iron and Steel Institute<br>1101 17th Street NW, Suite 1300<br>Washington, DC 20036 |
| ASME | American Society of Mechanical Engineers<br>Three Park Avenue<br>New York, NY 10016 |
| ANSI | American National Standards Institute<br>1819 L Street NW<br>Sixth Floor<br>Washington, D.C. 20036 |
| APA | American Plywood Association<br>Box 11700<br>Tacoma, WA 98411 |
| API | American Petroleum Institute<br>1220 L Street, N.W.<br>Washington, DC 20005 |
| AREA | American Railway Engineering and Maintenance-of-Way-Association<br>8201 Corporate Drive, Suite 1125<br>Landover, Maryland 20785 |
| ASTM | American Society for Testing and Materials<br>100 Barr Harbor Drive<br>West Conshohocken, PA 19428 |
| AWPA | American Wood-Preservers' Association<br>P.O. Box 5690<br>Granbury, TX 76049 |
| AWS | American Welding Society<br>550 NW 42nd Avenue<br>Miami, FL 33126 |

| | |
|---|---|
| AWWA | American Water Works Association<br>6666 West Quincy Avenue<br>Denver, CO 80235 |
| COH | City of Houston<br>P.O. Box 1562<br>Houston, TX 77251-1562 |
| CLFMI | Chain Link Fence Manufacturers Institute<br>9891 Broken Land Parkway, Suite 300<br>Columbia, MD 21046 |
| CRSI | Concrete Reinforcing Steel Institute<br>933 Plum Grove Road<br>Schaumburg, IL 60173-4758 |
| EJMA | Expansion Joint Manufacturers Association<br>25 North Broadway<br>Tarrytown, NY 10591 |
| FS | Federal Standardization Documents<br>General Services Administration<br>Specifications Unit (WFSIS)<br>7th and D Streets, S.W.<br>Washington, DC 20406 |
| ICEA | Insulated Cable Engineer Association<br>P.O. Box 440<br>S. Yarmouth, MA 02664 |
| IEEE | Institute of Electrical and Electronics Engineers<br>445 Hoes Lane<br>P.O. Box 440<br>Piscataway, NJ 08855-459 |
| ISA | International Society of Arboriculture<br>P.O. Box 3129<br>Champaign, IL 61826-3129 |
| MIL | Military Specifications<br>General Services Administration<br>Specifications Unit (WFSIS)<br>7th and D Streets, S.W.<br>Washington, DC 20406 |

| | |
|---|---|
| NACE | National Association of Corrosion Engineers<br>1440 South Creek Drive<br>Houston, TX 77084-4906 |
| NEMA | National Electrical Manufacturers' Association<br>1300 North 17th Street, Suite 1847<br>Rosslyn, VA 22209 |
| NFPA | National Fire Protection Association<br>1 Batterymarch Park<br>P.O. Box 9101<br>Quincy, MA 02269-9101 |
| OSHA | Occupational Safety Health Administration<br>U.S. Department of Labor<br>Office of Public Affairs – Room N3647<br>Washington, DC 20210 |
| PCA | Portland Cement Association<br>5420 Old Orchard Road<br>Skokie, IL 60077-1083 |
| PCI | Prestressed Concrete Institute<br>209 W. Jackson Blvd.<br>Chicago, IL 60606 |
| SDI | Steel Deck Institute<br>P.O. Box 25<br>Fox River Grove, IL 60021 |
| SSPC | Society for Protective Coatings (Steel Structures Painting Council)<br>40 24th Street, Sixth Floor<br>Pittsburgh, PA 15222 |
| TAC | Texas Administrative Code<br>Texas Water Resources Conservation Commission<br>P. O. Box 13087<br>Library MC-196<br>Austin, TX 78711-3087 |
| TxDOT | Texas Department of Transportation<br>125 East 11th Street<br>Austin, TX 78701-2483 |

| | |
|---|---|
| UL | Underwriters' Laboratories, Inc.<br>333 Pfingston Road<br>Northbrook, IL 60062 |
| UNI-BELL | UNI-BELL Pipe Association<br>2655 Villa Creek Drive, Suite 155<br>Dallas, TX 75234 |

PART 2 P R O D U C T S - Not Used

PART 3 E X E C U T I O N - Not Used

END OF SECTION

Section 01450

# CONTRACTOR'S QUALITY CONTROL

## PART 1 GENERAL

### 1.01 SECTION INCLUDES

A. Quality assurance and control of Installation and manufacturers' field services and reports.

### 1.02 QUALITY ASSURANCE AND CONTROL OF INSTALLATION

A. Monitor quality control over Suppliers, manufacturers, Products, services, site conditions and workmanship, to produce work of specified quality at no additional cost to the City.

B. Comply fully with manufacturers' Installation instructions, including each step in sequence.

C. Request clarification from Project Manager before proceeding when manufacturers' instructions conflict with the Contract.

D. Comply with specified standards as minimum requirements for the Work except when more stringent tolerances, codes, or specified requirements indicate higher standards or more precise workmanship.

E. Perform the Work by persons qualified to produce a specified level of workmanship.

### 1.03 REFERENCES

A. Obtain copies of standards and maintain at job site when required by individual Specification sections.

### 1.04 MANUFACTURERS' FIELD SERVICES AND REPORTS

A. When specified in individual Specification sections, or as required by Project Manager, provide Product suppliers' or manufacturers' technical representative to observe site conditions, conditions of surfaces and Installation, quality of workmanship, start-up of equipment, operator training, testing, adjusting and balancing of equipment as applicable and to initiate required operation. Conform to minimum time requirements for start-up operations and operator training when provided in Specification sections.

B. At Project Manager's request, submit qualifications of manufacturers' representative to Project Manager 15 days in advance of required representatives' services. Representative is subject to approval by Project Manager.

C. Manufacturer's representatives shall report observations and site decisions or instructions given to applicators or installers that are supplemental or contrary to a manufacturer's written instructions. Submit report within 14 days of observation to Project Manager for review.

PART 2 P R O D U C T S - Not Used

PART 3 E X E C U T I O N - Not Used

END OF SECTION

Section 01452

# INSPECTION SERVICES

## PART 1 G E N E R A L

### 1.01 SECTION INCLUDES

A. Inspection services and references

### 1.02 INSPECTION

A. City Engineer will appoint an Inspector to represent the City and perform inspections, tests, and other services specified in individual Specification sections.

B. City Engineer may also appoint, employ, and pay an independent firm to provide additional inspection or construction management services as indicated in Section 01454 - Testing Laboratory Services.

C. The independent firm will submit reports to Project Manager, indicating observations and results of tests and indicating compliance or noncompliance with Contract requirements.

D. Contractor shall assist and cooperate with the Inspector; furnish samples of materials, design mix, equipment, tools, and storage.

E. Contractor shall notify Project Manager 24 hours prior to expected time for operations requiring services.

F. Contractor shall sign and acknowledge reports for Inspector.

## PART 2 P R O D U C T S - Not Used

## PART 3 E X E C U T I O N - Not Used

END OF SECTION

Section 01454

# TESTING LABORATORY SERVICES

## PART 1 G E N E R A L

### 1.01 SECTION INCLUDES

A. Testing laboratory services and Contractor responsibilities related to those services.

### 1.02 REFERENCES

A. ASTM C 1077 - Standard Practice for Laboratories Testing Concrete and Concrete Aggregates for Use in Construction and Criteria for Laboratory Evaluation.

B. ASTM D 3666 - Standard Specification for Minimum Requirements for Agencies Testing and Inspecting Bituminous Paving Materials.

C. ASTM D 3740 - Standard Practice for Minimum Requirements for Agencies Engaged in the Testing and/or Inspection of Soil and Rock as Used in Engineering Design and Construction.

D. ASTM E 329 - Standard Specification for Minimum Requirements for Agencies Engaged in the Testing and/or Inspection of Materials Used in Construction.

E. ISO/TEC Guide 25 - General Requirements for the Competence of Calibration and Testing Laboratories.

### 1.03 SELECTION AND PAYMENT

A. The City will select, employ, and pay for services of an independent testing laboratory to perform inspection and testing identified in Part 3 of individual Specification sections.

B. Contractor shall employ and pay for services of an independent testing laboratory or laboratories to perform inspection and testing identified in Part 2 of individual Specification sections.

C. Employment of a testing laboratory by the City shall not relieve Contractor of its obligation to perform work in accordance with requirements of Contract documents.

D. The City will deduct a minimum two-hour charge for testing laboratory time from periodic progress payment when operations requiring testing or inspection are canceled without prior notification.

E. The City will deduct cost of retesting from periodic progress payment whenever failed work is removed, replaced and retested.

1.04 QUALIFICATION OF LABORATORY

A. Meet laboratory requirements of ASTM E 329 and applicable requirements of ASTM C 1077, ASTM D 3666, and ASTM D 3740.

B. Meet ISO/TEC Guide 17025 conditions for accreditation by the American Association for Laboratory Accreditation (A2LA) in specific fields of testing required in individual Specification sections.

C. If laboratory subcontracts are part of the testing services, such work will be placed with a laboratory complying with the requirements of this Section.

1.05 LABORATORY REPORTS

A. Testing laboratory shall provide and distribute copies of laboratory reports to the distribution list Project Manager provides at the pre-construction conference.

B. Keep one copy of each laboratory report distributed or faxed at the site field office for duration of the Work.

C. Laboratory will fax material supplier, Contractor and Project Manager reports that indicate failing test results by no later than close of business on the working day following test completion and review.

1.06 LIMITS ON TESTING LABORATORY AUTHORITY

A. Laboratory may not release, revoke, alter, or enlarge requirements of the Contract.

B. Laboratory may not approve or accept any portion of the Work.

C. Laboratory may not assume Contractor duties.

D. Laboratory has no authority to stop the Work.

1.07 CONTRACTOR RESPONSIBILITIES

A. Provide safe access to the Work and to manufacturer's facilities for Project Manager and for testing laboratory personnel.

B. Provide testing laboratory with a copy of the Construction Schedule and a copy of each update to Construction Schedule.

C. Notify Project Manager and testing laboratory during normal working hours of the day previous to expected time for operations requiring inspection and testing services. When Contractor fails to make timely prior notification, do not proceed with the operations requiring inspection and testing services.

D. Notify Design Consultant 24 hours in advance when Specification requires presence of Design Consultant for sampling or testing.

E. Request and monitor testing as required to provide timely results and to avoid delays to the Work. Provide samples to laboratory in sufficient time to allow required test to be performed in accordance with specified test methods before intended use of the Product.

F. Cooperate with laboratory personnel in collecting samples on site. Provide incidental labor and facilities for safe access to the Work to be tested, to obtain and handle samples at site or at source of Products to be tested, and to facilitate tests and inspections including storage and curing of test samples.

G. Make arrangements with laboratory through Project Manager. Payment for additional testing will be made in accordance with Document 00700 - General Conditions:

1. Re-testing required for failed tests.

2. Re-testing for nonconforming work.

3. Additional sampling and tests requested beyond specified requirements.

4. Insufficient notification of cancellation of tests for work scheduled but not performed.

PART 2 P R O D U C T S - Not Used

## PART 3 EXECUTION

### 3.01 CONDUCTING TESTING

A Conform to laboratory sampling and testing methods specified in individual Specification sections to the latest issues of ASTM standards, TxDOT methods, or other recognized test standards as approved by Project Manager.

B Requirements of this Section shall also apply to those tests for approval of materials, for mix designs, and for quality control of materials as performed by employed testing laboratories.

END OF SECTION

Section 01502

MOBILIZATION

PART 1 GENERAL

1.01 SECTION INCLUDES

A. Mobilization of construction equipment and facilities onto the site.

1.02 MEASUREMENT AND PAYMENT

A. Unit Price Contracts. If Contract is Unit Price Contract, measurement for mobilization is on a lump sum basis.

B. Stipulated Price (Lump Sum) Contract. If Contract is Stipulated Price Contract, payment for Work in this Section is included in total Stipulated Price.

C. Mobilization payments will be included in monthly payment estimates upon written application by Contractor subject to the following provisions:

1. Authorization for payment of 50 percent of that portion of Contract Price designated for mobilization will be made upon receipt and approval by Project Manager of the following items, as applicable:

a. Safety Program (Document 00700, Paragraph 10.1.1).

b. Site Utilization Plan (Section 01145).

c. Schedule of Values (Section 01292), if any.

d. Initial Construction Photographs (Section 01321), if needed.

e. Preliminary Construction Schedule and Billing Forecast (Section 01325).

f. Construction Schedule (Section 01325 or Section 01326, as applicable).

g. Submittal Schedule (Section 01330).

h. Site specific Storm Water Pollution Prevention Plan (SWPPP) and Notice of Intent (NOI) along with storm water application fee (Section 01410), if required.

i. Contractor's Quality Control Plan (Section 01450), if required.

j. Establishment of a Field Office for Project Manager meeting requirements of Section 01520 - Temporary Field Office.

k. Traffic Control Plan (Section 01555), if required.

l. Plan for Control of Ground and Surface Water (Section 01578), if required.

m. Project Signs Submittal (Section 01580).

n. Trench Safety Program (Section 02260), if required.

o. Dewatering plan, when required.

2. Authorization for payment of the balance of that portion of Contract Price designated for mobilization will be made upon completion of the Work amounting to five percent of Original Contract Price. The amount of Contract Price designated for mobilization may not be applied in computing whether or not five percent of the Original Contract Price has been obtained.

3. Mobilization payments will be subject to retainage amounts stipulated in Document 00700 – General Conditions.

PART 2 P R O D U C T S -Not Used

PART 3 E X E C U T I O N -Not Used

END OF SECTION

Section 01504

# TEMPORARY FACILITIES AND CONTROLS

## PART 1 GENERAL

### 1.01 SECTION INCLUDES

A. Temporary facilities and necessary controls for the Project, including utilities, telephone, sanitary facilities, storage sheds and building, safety requirements, first aid equipment, fire protection, security measures, protection of the Work and property, access roads and parking, environmental controls, pest and rodent control and disposal of trash, debris and excavated material.

B. Facilities and controls specified in this section are considered minimum for the Project. Provide additional facilities and controls for proper execution of the Work and to meet Contractor's responsibilities for protection of persons and property.

### 1.02 MEASUREMENT AND PAYMENT

A. UNIT PRICES

1. No separate payment will be made for any temporary facilities and controls required under this section. Include cost of such work in contract price listed for mobilization.

### 1.03 CONTRACTOR'S RESPONSIBILITY

A. Comply with applicable requirements specified in other sections of Specifications.

1. Maintain and operate temporary facilities and systems to assure continuous service.

2. Modify and extend systems as the Work progress requires.

3. Completely remove temporary materials and equipment when no longer required.

4. Restore existing facilities used for temporary services to specified or original condition.

## PART 2 PRODUCTS - NOT USED

## PART 3 EXECUTION

### 3.01 TEMPORARY UTILITIES

A. Obtaining Temporary Service:

1. Make arrangements with utility service companies for temporary services.

2. Abide by rules and regulations of the utility service companies or authorities having jurisdiction.

3. Be responsible for utility service costs until Date of Substantial Completion. Included are fuel, power, light, heat, and other utility services necessary for execution, completion, testing, and initial operation of work.

B. Water:

1. Provide water required for and in connection with work to be performed and for specified tests of piping, equipment, devices, or for other use as required for proper completion of the Work.

2. Water to be drawn from public fire hydrants. Obtain transit meter from City of Houston, Department of Public Works and Engineering, Taps and Meters Section. Pay required deposit based on rates established by latest ordinance.

3. Provide and maintain an adequate supply of potable water for domestic consumption by Contractor personnel, Project Manager and representatives of the City.

C. Electricity and lighting:

1. Provide electric power service required for the Work including required testing, lighting, operation of equipment, and other Contractor use.

2. Electric power service includes temporary power or generators required to maintain plant operations during scheduled shutdowns.

3. Minimum lighting level shall be 10 foot-candles for open areas; 20-foot-candles for stairs and shops. Provide a minimum of one 300-watt lamp for each 200 square feet of work area.

D. Temporary Heat and Ventilation:

1. Provide temporary heat necessary for protection or completion of the Work.

2. Provide temporary heat and ventilation to assure safe working conditions; maintain enclosed areas at a minimum of 50 degrees F.

E. Telephone:

1. Provide emergency telephone service at Project site for use by Contractor personnel and others performing work or furnishing services at the site.

2. Provide Houston-Metro lines, allowing unlimited calls, without charge in Greater Houston Metropolitan area with "call waiting" and "call forwarding" options. Provide one telephone answering machine with beeperless remote message retrieval capability.

F. Sanitary Facilities:

1. Provide and maintain sanitary facilities for persons on the site; comply with regulations of State and local departments of health.

2. Enforce use of sanitary facilities by construction personnel at site. Enclose sanitary facilities. Pit-type toilets are not permitted. No discharge will be allowed from these facilities. Collect and store sewage and waste so as not to cause nuisance or health problems. Haul sewage and waste off-site and properly dispose in accordance with applicable regulations.

3. Locate toilets near the Work site and secluded from view insofar as possible. Keep toilets clean and supplied throughout the course of the Work.

3.02 STORAGE SHEDS AND BUILDINGS

A. Provide adequately ventilated, watertight storage facilities with floor above ground level for Products susceptible to weather damage.

B. Storage of Products not susceptible to weather damage may be on blocks off the ground.

C. Store Products in a neat and orderly manner. Place Products to permit easy access for identification, inspection and inventory.

D. Fill and grade site for temporary structures to provide drainage away from temporary and existing buildings.

3.03 SAFETY REQUIREMENTS

A. Submit a safety program at the pre-construction meeting and follow the program in accordance with Document 00700 – General Conditions. Include documented response to trench safety requirements of Section 02260 - Trench Safety System.

B. Conduct operations in strict accordance with applicable Federal, State and local safety codes and statutes and with good construction practice. Establish and maintain procedures for safety of all work, personnel and equipment involved in the Work.

C. Observe and comply with Texas Occupational Safety Act (Art. 5182a, V.C.S.) and with all safety and health standards promulgated by Secretary of Labor under Section 107 of Contract Work Hours and Standards Act, published in 29 CFR Part 1926 and adopted by Secretary of Labor as occupational safety and health standards under Williams-Steiger Occupational Safety and Health Act of 1970, and to other legislation enacted for safety and health of Contractor employees. Safety and health standards apply to Subcontractors and Suppliers as well as to the Contractor.

D. Observance of and compliance with safety regulations is Contractor's responsibility without reliance or superintendence of or direction by Project Manager. Immediately advise Project Manager of investigation or inspection by Federal Safety and Health inspectors of Contractor's or Subcontractor's work or place of work on site under the Contract, and after investigation or inspection, advise Project Manager of results. Submit one copy of accident reports to Project Manager within 10 days of occurrence.

E. Protect areas occupied by workmen using the best available devices for detection of lethal and combustible gases. Test devices frequently to assure functional capability. Constantly observe infiltration of liquids into the Work area for visual or odor evidence of contamination, and immediately take appropriate steps to seal off entry of contaminated liquids to the Work area.

F. Implement safety measures, including but not limited to safety personnel, first-aid equipment, ventilating equipment and other safety equipment specified or detailed on Drawings.

G. Maintain required coordination with City Police and Fire Departments during entire period covered by the Contract.

H. Include Project safety analysis in safety plan. Itemize major tasks and potential safety hazards. Plan to eliminate hazards or protect workers and public from each hazard.

3.04 FIRST AID EQUIPMENT

A. Provide a first aid kit throughout the construction period. List telephone numbers for physicians, hospitals, and ambulance services in each first aid kit.

B. Have at least one person thoroughly trained in first aid and CPR procedures present on the site when work is in progress. Contractor to conform to protocols and requirements for training and protection against "blood borne pathogens".

3.05 FIRE PROTECTION

A. Conform to specified fire protection and prevention requirements established by Federal, State, or local governmental agencies and as provided in Safety Program.

3.06 SECURITY MEASURES

A. Protect the Work, materials, equipment, and property from loss, theft, damage, or vandalism. Protect City property used in performance of the Contract.

B. If existing fencing or barriers are breached or removed for purposes of construction, provide and maintain temporary security fencing equal to existing.

3.07 PROTECTION OF UTILITIES AND PIPELINES

A. Prevent damage to existing public utilities during construction. Approximate locations of known utilities are shown on Drawings, but all lines may not be shown. Excavate with caution and repair lines damaged by construction operations.

B. Use the Utility Coordinating Committee One Call System, telephone number, (713) 223-4567, which must be called 48 hours in advance. The toll free telephone number is 1-800-669-8344, Texas One Call System.

C. Before excavating, locate underground utilities by appropriate means including the use of metal detection equipment, and probes, or by excavation or surveys. Repair damage caused by investigative work and by failure to locate or to preserve underground utilities.

D. Give utility owners a minimum five days notice before commencing excavation to allow time to locate utilities and make adjustments or

relocations when they conflict with the Work. Include cost for temporary relocation of water, wastewater, and storm drainage lines, necessary to accommodate construction, in unit prices for utility construction unless otherwise noted. Bypassing of sanitary waste to storm drainage facilities is not allowed.

E. Prior to excavation near pipelines, request a representative of the pipeline company to meet with Contractor and Project Manager at the site to discuss procedures to be used. Request pipeline company's representative to locate the pipelines in at least three locations: at each side and at centerline of proposed excavation of proposed utility. Also request representative and Project Manager to be present to observe Contractor operations when excavation is conducted within 15 feet of pipeline.

F. Utility service lines are not shown on the construction document drawings. Contractor should anticipate that such service lines exit and should exercise extreme caution during construction. The utility service lines should be repaired and restored immediately as per the specification, if damaged due to any construction activities. No separate payment will be made for this repair and restoration work. Include payment in unit price for work in appropriate sections.

G. Prior to abandonment of utility, make appropriate arrangements with City and owner of utility to terminate service, remove meters, tranformers, and poles as may be required by site conditions.

3.08 PROTECTION OF THE WORK AND PROPERTY

A. Preventive Actions

1. Take necessary precautions and actions to prevent damage, injury, or loss to the Work or public and private property, including:

   a. Storage of apparatus, supplies, and Products in an orderly, safe manner to limit interference with progress of the Work or work of other contractors, utility service companies, or the City's operations.

   b. Suitable storage for Products subject to damage by exposure to weather, theft, breakage, etc.

   c. Limitation of loading pressures imposed upon portions of the Work.

   d. Frequent clean up of refuse, scrap materials, and debris from construction operations, necessary to maintain the site in a safe and orderly condition.

e. Provision of barricades and guard rails to protect pedestrian and traffic around openings, scaffolding, temporary stairs and ramps, excavations, elevated walkways, and other hazardous areas.

2. Protect public and private property adjacent to the site. Obtain written consent before entering or occupying privately-owned land except on easements provided for construction. Restore property damaged by construction operations to condition equal to or better than that existing before the damage.

B. Barricades and Warning Systems

1. Where work is performed on or adjacent to roadways, rights-of-ways, or public land, provide barricades, fences, lights, warning signs, danger signals, and other precautionary measures necessary for protection of persons or property and for protection of the Work.

a. Erect sufficient barricades to keep vehicles and pedestrians from entering the Work. Paint barricades to be visible at night. From sunset to sunrise, provide at least one light at each barricade.

b. Maintain barricades, signs, lights, and provide watchmen until Project Manager approves removal. Whenever work creates encroachment onto public roadways, station flagmen to manage traffic flow in accordance with approved traffic control plan.

c. Conform to requirements of section 01555 – Traffic Control and regulation.

C. PROTECTION OF EXISTING STRUCTURES

1. Underground Facilities

a. Known Underground Facilities are shown on the Drawings but all Facilities may not be shown. Explore sufficiently ahead of trenching and excavation work to locate Underground Facilities in order to prevent damage to them and to prevent interruption of utility services. Restore damage to Underground Facilities to original condition at no additional cost to the City.

b. If necessary to avoid unanticipated Underground Facilities, Project Manager may make changes in location of the Work.

c. If permanent relocation of an Underground Facility is required

and not provided for in the Contract documents, City Engineer will direct Contractor in writing to perform the Work under Modification provisions in Document 00700 - General Conditions.

2. Surface Structures include buildings, tanks, walls, bridges, roads, dams, channels, open drainage, piping, poles, wires, posts, signs, markers, curbs, walks, guard cables, fencing, and other facilities that are visible above the ground level.

3. Protection of Underground Facilities and Surface Structures:

   a. Support in place and protect Underground Facilities and Surface Structures located within or adjacent to the limits of the Work from damage. Install supports as required by the owner of the structure. Satisfy Project Manager that the owner of the facility or structure has approved methods and procedures before installing structure supports.

   b. Avoid moving or changing public utility or private corporation property without prior written consent of a responsible official of the facility or structure. Allow representatives of utilities to enter the construction site for maintenance and repair purposes or to make necessary changes.

   c. Notify utility and pipeline owners and operators of the nature of construction operations and dates when operations will be performed. When construction operations are required in immediate vicinity of existing structures, pipelines, or utilities, give a minimum of five working days advance notice. Probe and flag location of Underground Facilities prior to commencement of excavation. Keep flags in place until construction operations uncover the facility.

   d. Assume risk for damages and expenses to Underground Facilities and Surface Structures within or adjacent to the Work.

D. Employ a structural engineer to ensure protection measures are adequate for the safety and integrity of structures and facilities.

E. PROTECTION OF INSTALLED PRODUCTS:

1. Provide protection of Installed Products to prevent damage from subsequent operations. Remove protection facilities when no longer needed, prior to completion of the Work.

2. Control traffic to prevent damage to Products and surfaces.

3. Provide coverings to protect Products from damage. Cover projections, wall corners, jambs, sills, and exposed sides of openings in areas used for traffic and passage of materials in subsequent work.

3.09 ROADS AND PARKING

A. Prevent interference with traffic and operations of the City on existing roads.

B. Designate temporary parking areas to accommodate construction and City personnel. When site space is not adequate, provide additional off-site parking. Locate as approved by Project Manager.

C. Minimize use by construction traffic on existing streets and driveways.

D. Do not allow heavy vehicles or construction equipment in existing parking areas.

3.10 ENVIRONMENTAL CONTROLS

A. Use methods, equipment, and temporary construction necessary for control of environmental conditions at the site and adjacent areas.

B. Comply with statutes, regulations, and ordinances relating to prevention of environmental pollution and preservation of natural resources including National Environmental Policy Act of 1969, PL 91-190, Executive Order 11514.

C. Minimize impact to the surrounding environment. Do not use construction procedures that cause unnecessary excavation and filling of terrain, indiscriminate destruction of vegetation, air or stream pollution, or harassment or destruction of wildlife.

D. Limit disturbed areas to boundaries established by the Contract. Do not pollute on-site streams, sewers, wells, or other water sources.

E. Do not burn rubbish, debris or waste materials.

3.11 POLLUTION CONTROL

A. Provide methods, means, and facilities necessary to prevent contamination of soil, water or the atmosphere by discharge of Pollutants from construction operations.

B. Provide equipment and personnel to perform emergency measures to contain spillage, and to remove contaminated soils or liquids. Excavate and dispose of contaminated earth off-site in accordance with laws and regulations, and

replace with suitable compacted fill and topsoil.

C. Provide systems necessary for control of Pollutants.

1. Prevent toxic concentrations of chemicals.

2. Prevent harmful dispersal of Pollutants into the environment.

D. Use equipment that conforms to current Federal, State, and local laws and regulations.

3.12 PEST AND RODENT CONTROL

A. Provide rodent and pest control as necessary to prevent infestation of construction or storage areas.

B. Employ methods and use materials that will not adversely affect conditions at site or on adjoining properties.

3.13 NOISE CONTROL

A. Provide vehicles, equipment, and use construction activities that minimize noise to the greatest degree practicable. Conform to noise levels of Chapter 30 –Noise and Sound Level Regulation, City Code of Ordinances, and latest OSHA standards. Do not permit noise levels to interfere with the Work or create a nuisance to surrounding areas.

B. Conduct construction operations during daylight hours except as approved by Project Manager.

C. Select construction equipment that operates with minimum noise and vibration. When directed by Project Manager, correct objectionable noise or vibration produced by operation of equipment at no additional cost to the City. Sound Power Level (PWL) of equipment shall not exceed 85 dbA (re: $10^{-12}$ watts) measured five feet from the equipment, or at a lower level if prescribed by City Ordinances. Equipment noise requirements are contained in equipment specifications.

3.14 DUST CONTROL

A. Use water or other methods approved by Project Manager to control amount of dust generated by vehicle and equipment operations.

3.15 WATER RUNOFF AND EROSION CONTROL

A. Comply with requirements of section 01410 – TPDES Requirements.

B. Conduct fill, grading and ditching operations and provide adequate methods necessary to control surface water, runoff, subsurface water, and water from excavations and structures in order to prevent damage to the Work, the site, or adjoining properties.

1. Plan and execute construction and earthwork by methods that control surface drainage from cuts and fills, and from borrow and waste disposal areas.

2. Minimize area of bare soil exposed at one time.

3. Provide temporary control measures, such as berms, dikes, and drains.

4. Provide, operate, and maintain equipment and facilities of adequate size to control surface water.

5. Construct fill and waste areas by selective placement of materials to eliminate erosion of surface silts or clays that may erode.

6. Direct water away from excavations, pits, tunnels, and other construction areas to prevent erosion, sedimentation or damage.

7. Maintain existing drainage patterns adjacent to the site by constructing temporary earth berms, sedimentation basins, retaining areas, and temporary ground cover.

8. Dispose of drainage water in a manner to prevent flooding, erosion, or other damage to the site or adjoining areas, in conformance with environmental requirements.

9. Inspect earthwork periodically to detect any evidence of erosion. Take corrective measures as required to control erosion.

END OF SECTION

Section 01506

# DIVERSION PUMPING

## PART 1 G E N E R A L

### 1.01 DEFINITIONS

A. Diversion-pumping: Installation and operation of bulkheads, plugs, hoses, piping, and pumps required to maintain sewer flow and prevent backups and overflows.

### 1.02 SYSTEM DESCRIPTION

A. Provides continuous sewer service to users of sewer systems while maintenance or construction operations are in progress, by diverting flow around construction locations. Maintain sewer flow to prevent backup or overflow onto streets, yards and unpaved areas or into buildings, adjacent ditches, storm sewers, and waterways. Do not divert sewage outside of sanitary sewer system.

B When pumps are operating, have an experienced operator on site to monitor operation, adjust pumps, make minor repairs to system, and report problems.

### 1.03 SUBMITTALS

A. Conform to requirements of Section 01330 - Submittals Procedures.

B. For systems that bypass sanitary sewer line segments of 42-inch diameter or larger, submit a Diversion Pumping Plan prior to installation. Show location, number and size of pumps, number, location, size and type of hoses or rigid piping, and location of downstream discharge; and special features where pipes or hoses cross roadways, temporary trenches, support bridges.

### 1.04 SCHEDULING

A. When the City operates or maintains diversion pumping in construction areas, coordinate construction activities with Project Manager.

B. Cease operation of diversion pumping when approved by Project Manager.

## PART 2 PRODUCTS

### 2.01 MATERIALS

A. Design piping, joints and accessories to withstand at least twice maximum system pressure or 50 psi, whichever is greater.

B. Use self-priming type or submersible electric pumps, with a working pressure gauge on the discharge. Pumps shall meet requirements of City of Houston Noise and Sound Level Regulations.

## PART 3 EXECUTION

### 3.01 FIELD QUALITY CONTROL

A. During diversion pumping, do not allow sewage to leak, dump, or spill into or onto areas outside of existing sanitary sewer systems.

B. In the event of an accidental spill or overflow, immediately stop discharge and take action to clean up and disinfect spill. Promptly notify Project Manager so required reporting can be made to the Texas Commission on Environmental Quality (TCEQ) and the Environmental Protection Agency (EPA).

### 3.02 CLEANING

A. When diversion-pumping operations are complete, drain sewage within piping into sanitary sewers prior to disassembly.

END OF SECTION

Section 01520

# TEMPORARY FIELD OFFICE

## PART 1 GENERAL

### 1.01 SECTION INCLUDES

A Temporary field office building and associated parking area.

### 1.02 FACILITY DESCRIPTION

A Temporary field office to be utilized by authorized representatives of the City to coordinate and monitor daily construction activities performed by Contractor.

B. Field office shall be a non-smoking facility.

## PART 2 PRODUCTS

### 2.01 FIELD OFFICE

A General:

1. Locate office in vicinity of the Work at a location approved by Project Manager or where indicated on Drawings.

2. Furnish, Install and maintain field office for exclusive use of authorized representatives of the City. Provide sufficient room for Project meetings and Inspector's office.

3. Provide office within 10 days of Date of Commencement of the Work.

4. Construct two all-weather, hard surfaced parking spaces for exclusive use of authorized representatives of the City. Provide all-weather surfaced walk between parking spaces and field office.

B. Minimum Construction:

1 Structurally sound foundation and superstructure.

Weather tight with insulated roof, walls and 7-foot ceiling (minimum).

3. Stairs or walkway with handrail and covered entrance platform (minimum 4 feet by 4 feet) with mud scraper at door.

4. Resilient floor covering.

5. Screened windows with area equal to approximately 10 percent of floor area sufficient for light, view of the site, and ventilation. Provide each window with operable sash and burglar bars.

6. Secure exterior doors with dead-bolt cylinder locks and burglar bars.

C. Minimum Services:

1. Exterior entrance light.

2. Interior lighting of 75 foot-candles minimum at desktop height

3. Automatic heating to maintain 65 degrees F in winter.

4. Automatic cooling to maintain 75 degrees F in summer.

5. Electric power service.

6. Three telephone service lines one for voice, one for data, and one for fax, for exclusive use of authorized representatives of the City.

7. Sanitary facilities in field office with one water closet, one lavatory, and one medicine cabinet for exclusive use of authorized representatives of the City.

D. Minimum Furnishings:

1. One 5-drawer desk

2. Two swivel desk chairs with casters.

3. One plan table.

4. One drawing plan rack.

5. One 4-drawer legal file cabinet complete with fifty legal-size hanging folders and two full-sized carriers.

6. One marker board with cleaner and markers.

7. Two waste baskets.

8. One 30-inch by 36-inch tack board.

9. One all-purpose fire extinguisher.

10. Six protective helmets (hard hats) with ratchet adjustment for exclusive use of authorized representatives of the City.

11. Conference table and chairs to accommodate 10 persons.

12. All in one printer, copier, plain paper fax machine.

13. Telephone instrument separate from fax machine.

E. Provide adequate space for one set of Contract documents for ready reference.

## PART 3 EXECUTION

### 3.01 MAINTENANCE

A Maintain all-weather surface driveway and parking areas, buildings, walkways, stairs and required furnishings and equipment for duration of the Contract.

B. Provide janitorial services for duration of the Contract consisting of twice weekly sweeping and mopping floors, trash removal, weekly restroom cleaning, and weekly dusting of furniture and equipment.

C. Provide soap, paper towels, toilet paper, cleansers and other necessary consumables.

D. Immediately repair damage, leaks or defective service.

### 3.02 PROJECT CLOSEOUT

A Remove temporary field office and signs and restore site as specified in Section 01770 - Closeout Procedures.

END OF SECTION

# SECTION 01554

# TRAFFIC CONTROL AND STREET SIGNS

## PART 1 GENERAL

### 1.01 SECTION INCLUDES

A. Materials, hardware and installation of Traffic Signs.

### 1.02 SUBMITTALS

A. Contractor shall submit a list of intended suppliers and products to be used for all signs, posts, and associated hardware. City reserves the right to request actual product samples prior to approval.

### 1.03 MEASUREMENT AND PAYMENT

A. Signs installed or replaced will be measured by the each sign. Signs refurbished will be measured by each sign.

B. Payment for installation of traffic signs will be on the basis of each sign installed.

C. The price is full compensation for furnishing and installing new signs and hardware. Cost of associated posts, footings, and miscellaneous mounting hardware will not be paid for directly but is to be included in the unit price bid for installation of each traffic sign.

D. Non-standard signs installed or replaced will be measured by the square foot of the sign face. Non-standard signs shall not be installed without prior approval from the City.

## PART 2 PRODUCTS

### 2.01 MATERIALS

A. The following ASTM Standards and documents, of the issue in effect on the date of Invitation for Bid, form a part of this specification to the extent herein.

1. ASTM B 209 Specification for Aluminum and Aluminum Alloy Sheet and Plate

2. ASTM D 523 Standard Method for Test for Specular Gloss

3. ASTM D 4956 Standard Specification for Retroreflective Sheeting for Traffic Control

4. ASTM E 284 Standard Definition of Terms Relating to Appearance of Materials

5. ASTM E 308 Computing the Colors of Objects by Using the CIE System

6. ASTM E 810 Standard Test Method for Coefficient of Retroreflection of Retroreflective Sheeting

7. ASTM E 1164 Standard Practice for Obtaining Spectrophotometric Data for Object-Color Evaluation

B. Substrate (Sign Blanks). This shall be aluminum alloy 5052-H38 and otherwise in conformance with ASTM B-209 and have gold chromate finish. The size, shape and thickness of the sign blanks are as indicated on the standard detail sheet in the plans or as specified by the Engineer.

1. Metal working. The aluminum shall be free of burrs and pits on both sides, including
edges and holes, and shall be made ready for applications of the sheeting.

2. Surface Preparation. The aluminum shall be thoroughly cleaned and degreased with solvent and alkaline emulsions cleaner by immersion, spray, or vapor degreasing and dried prior to application of the gold chromate sheeting coat. The aluminum shall be new and corrosion-free with holes drilled or punched, corners rounded to the radii shown in the standard detail sheet, and all edges smoothed prior to application of sheeting. The heavy or medium chromate coating shall conform in color and corrosion resistance to that imparted by the Alodine 1200F treatment.

3. Size. The dimensions of substrate applications for regulatory, warning, and guide signs shall be as specified by the Engineer and as shown on the plans.

C. Sign Face (Background, Legends, Symbols, and Colors). These shall be in accordance with the Standard Highway Sign Designs (SHSD) for Texas and with the Texas Manual of Uniform Traffic Control Devices (TMUTCD).

1. The sign face, made of electronic film and retro-reflective sheeting shall comply with the appearance, specification, and good workmanship designated by the using agency for sign faces constructed of screen processed retro-reflective sheeting of the same type.

2. All sign blanks shall be covered with appropriate retro-reflective sheeting.

   a. All ground mounted stop signs, warning signs, and other regulatory signs, shall use at a minimum High Intensity Prismatic Reflective Sheeting.

   b. All overhead signs shall use Diamond Grade Reflective Sheeting.

   c. All other signs shall use Super Engineer Grade Sheeting

3. Application Methods. The method of application of sheeting, letters, numbers, and symbols shall be precisely as prescribed in writing by the manufacturer.

   a. Legend Spacing and Layout. Spacing and layout for all traffic control signs shall conform to the SHSD.

   b. Tolerance for Horizontal Alignment. Letters, numerals, and symbols shall be horizontally aligned to a tolerance of 1/16 inch.

   c. Tolerance for Vertical Alignment. Letters, numerals, and symbols shall be vertically aligned to a tolerance of 1/16 on each letter in each line.

D. Sign Posts. Steel post shall conform to the standard specification for hot rolled carbon sheet steel, structural quality, ASTM designation A570, Grade 50. Average minimum yield strength after cold forming is 60,000 psi. The cross section of the post shall be square tube formed steel, carefully rolled to size and shall be welded directly in the corner by high frequency resistance welding or equivalent process and externally scarified to agree with corner radii. Sign posts shall be hot dipped galvanized conforming to ASTM A653, G90.

1. Installation. The square end of the post shall not be modified or pointed.

   a. Flange. When sign post installation is required over building basements, bridges and cavities, a galvanized cast iron pipe flange shall be used. The base shall be 8 inches in diameter with six 5/16 inch holes drilled equidistant around the circumference, ⅝ inch from the outer edge. The neck of the flange shall be 3inches in diameter, drilled and threaded to receive a 2 inch diameter galvanized post.

   b. Hardware. All ground mounted signs shall be attached to posts using 5/16" nut and bolt assembly, the bolt being 2 ½" in length. Stainless steel banding material, brackets and clips will be used for signs installed on light standards or mast arms.

c. Construction. Anchors shall be anchored in a minimum of one cubic foot of class "C" concrete, 28 inches deep, with a 6 inch long, ⅜ inch diameter pin inserted through the pre-drilled hole 3 inches from the bottom of the pole. Where the pole installation requires surface mounting, an 8 inch flange with a 2 inch threaded collar shall be used. The pole shall be galvanized, two inches in diameter and threaded to fit the flange. Sign placement and orientation shall be as specified in the construction plans.

E. Each finished sign shall have the following sticker affixed to the back in a location where it will be visible when the sign is installed:

**CITY OF HOUSTON**

**VERNON CIVIL STATUTES**
**ART 6701d / ARTICLE III, SEC. 37**
**Unlawful to Deface, Remove, Knockdown, or Alter Any Traffic Control Device**
**MAXIMUM FINE $200.00**
Date of Sign Manufacture: 00/04
Sheeting Manufacturer: XYZ,. Inc.
Sheeting Lot No.: 12345-678

The sticker shall be Zebra Technologies Z-Ultimate 3000 White or approved equal. Finished product shall be weather and fade resistant for the expected life of the sign.

F. Warranty. The Contractor shall warrant the materials and workmanship of each sign in accordance with the maximum limits of material warranties extended by manufacturers of raw materials, subject to the conditions they specify. The retro-reflective sheeting will be considered unsatisfactory if it has deteriorated due to natural causes to the extent that: (1) the sign is ineffective for its intended purpose when viewed from a moving vehicle under normal day and night driving conditions; or (2) the coefficient of retro-reflection is less than the minimum specified for that sheeting. When sign failure occurs prior to the minimum years indicated and an inspection demonstrates that the failure is caused by materials warranted to contractor to endure at least that long, the sign will be replaced or repaired free of materials charges. When failure occurs and inspection demonstrates that such failure is due to poor workmanship, the sign will be replaced or repaired at Contractor's expense, including shipping charges.

## PART 3 EXECUTION

### 3.01.1 EQUIPMENT

A. The contractor shall provide machinery, tools, and equipment necessary for proper execution of the work.

### 3.01.2 CONSTRUCTION

A. Construction shall be high quality with no visible defects in the finished product. Fabrication shall be in accordance with these specifications. Street name signs shall always be supplied and installed at each project intersection whether signs previously existed at the location or not.

B. The removal of existing signs shall be coordinated with the Traffic Operations Section of the Public Works Department (713-803-3054) and arrangements made for a convenient time to deliver City signs and poles. All salvaged traffic signs shall be delivered to the Traffic Operations Center located at 2200 Patterson Street. All deliveries to the Traffic Operations Center requires a minimum notice of two (2) working days prior to returning or delivering any sign and/or sign related material.

### 3.03 RESPONSIBILITIES

A. The contractor is responsible for providing and supplying aluminum traffic signs covered with retro-reflective sheeting, applying standard legends (or special legends if shown in the plans) to the covered sign blanks, galvanized steel sign poles, pole anchors, all hardware for installing the signs and poles, and for installing traffic signs, poles and anchors as shown in the plans or call for in the contract documents, complete and ready for field installations.

END OF SECTION

Section 01555

# TRAFFIC CONTROL AND REGULATION

## PART 1 GENERAL

### 1.01 SECTION INCLUDES

A. Requirements for signs, signals, control devices, traffic barriers, flares, lights and traffic signals; construction parking control, designated haul routes, and bridging of trenches and excavations.

B. Qualifications and requirements for use of flagmen.

### 1.02 MEASUREMENT AND PAYMENT

A. Unit Price Contracts.

1. Traffic control and regulation. Payment for traffic control and regulation is on a lump sum basis. Include preparation and submittal of traffic control plan if different than shown on Drawings, and provision of traffic control devices, equipment, and personnel necessary to protect the Work and public. Payment will be based on Contractor's Schedule of Values for traffic control and regulation.

2. Payment for traffic control will be authorized by Project Manager in three (3) parts. Partial payment will be made according to following schedule:

   a. Payment of 25 percent of traffic control amount will be authorized when permanent control devices and necessary temporary markings, sufficiently deployed along job site as required to maintain progress of work, are installed at job site and approved. This limiting percentage will be prorated based upon extent of Contractor's setup.

   b. A payment of 50 percent of traffic control amount will be authorized when pavement replacement commences. This limiting percentage will be prorated based upon linear footage, as measured along centerline axis of water main, of pavement replaced.

   c. A payment of 25 percent of traffic control amount will be authorized when permanent pavement markings are restored and all unnecessary permanent and temporary control devices removed. This limiting percentage will be prorated based upon the extent of restoration.

3. Flagmen: Measurement is on a lump sum basis for flagmen as required for the project. The amount invoiced shall be determined based on the schedule of value submitted for flagmen.

4. New Portable Concrete Low Profile Traffic Barrier Provided. Payment is on a unit price basis for each linear foot of low profile traffic barrier provided, installed with hardware assemblies and connected together in accordance with the approved traffic control plan.

5. Portable Concrete Low Profile Traffic Barrier picked up from City of Houston Stockpile. Payment is on a unit price basis for each linear foot of low profile traffic barrier picked up from designated stockpile, moved onto the project, set at location and connected together.

6. Portable Concrete Low Profile Traffic Barrier Installed. Payment is on a unit price basis for each linear foot of low profile traffic barrier delivered to the project location, installed with hardware assemblies and connected together in accordance with the approved traffic control plan.

7. Portable Concrete Low Profile Traffic Barrier Moved and Reset. Payment is on a unit price basis for each linear foot of low profile traffic barrier disassembled, moved on the project, reset at the new locations and connected together. Include cost to repair roadway in the unit price.

8. Portable Concrete Low Profile Traffic Barrier Removed. Payment is on a unit price basis for each linear foot of low profile traffic barrier removed from the project, including hardware assemblies, and stockpiling at location listed in Section 01110 – Summary of Work. Include cost to repair roadway in the unit price.

9. Refer to Section 01270 - Measurement and Payment for unit price procedures.

B. Stipulated Price Contracts. Include payment for work under this section in the total Stipulated Price.

1.03 REFERENCES

A. Texas Manual on Uniform Traffic Control Devices (TMUTCD)

B. Article 4413 (29bb), commonly referred to as Private Investigators and Private Security Agencies Act, and Article 2.12, Texas Code of Criminal Procedure.

C. Code of Ordinances, City of Houston, Texas.

1. Chapter 10 Buildings And Neighborhood Protection, Article X Cleanup After Demolition Or Removal Of Structures

2. Chapter 40 Streets and Sidewalks, Article XVII Pedestrian Way Impairments

1.04 SUBMITTALS

A. Conform to requirements of Section 01330 - Submittal Procedures.

B. Traffic control plan:

1. If using traffic control plan contained in the Contract without modification, submit a letter confirming use of the plan.

2. If using a different traffic control plan, submit the plan for approval. The plan must conform to TMUTCD requirements and be sealed by a Registered Texas Professional Engineer.

C. Submit copies of approved lane closure permits issued by City Traffic Engineering Branch.

D. Submit Schedules of Values for traffic control plan and flagmen within 30 days following Notice to Proceed.

E. Submit records verifying qualifications of Uniformed Peace Officers and Certified Flagmen proposed for use on the Work.

F. When working in the central business district, submit copies of approved Pedestrian Way permits issued by the City's Traffic Engineering Branch.

1.05 FLAGMEN

A. Use Uniformed Peace Officers and Certified Flagmen to control movement of vehicular and pedestrian traffic when construction operations encroach on public traffic lanes. Unless otherwise approved by Project Manager, use Uniformed Peace Officer for work along major thoroughfares, schools, churches, hospitals and Work at signalized intersections.

B. Uniformed Peace Officer: Individual employed full-time as a peace officer who receives separate compensation as a privately employed flagman. Private employment may be an employee-employer relationship or on an individual basis. Flagman may not be in the employ of another peace officer nor be a reserve peace officer.

1. Uniformed Peace Officers may be:

   a. sheriffs and their deputies;

   b. constables and deputy constables;

   c. marshals or police officers of an incorporated city, town or village; or

   d. as otherwise provided by Article 2.12, Code of Criminal Procedure.

2. The Uniformed Peace Officer must be a full-time peace officer, must work a minimum average of 32 paid hours per week, and must be paid a rate not less than the prevailing minimum hourly wage rate set by the federal Wage and Hour Act. The individual must be entitled to vacation, holidays, and insurance and retirement benefits.

C. Certified Flagman: Individual who receives compensation as a flagman and meets the following qualifications:

1. Formally trained and certified in traffic control procedures by the City s E. B. Cape Center.

2. Speaks English. Ability to speak Spanish is desirable but not required.

3. Paid for flagman duty at an hourly rate not less than the wage rate set for Rough Carpenter under the City's Wage Scale for Engineering Construction.

D. Certified Flagmen must wear a distinctive uniform, bright-colored vest, and be equipped with appropriate flagging and communication devices while at the Work site. They must also have in their possession while on duty, a proof of training identification card issued by the appropriate training institute.

## PART 2 PRODUCTS

### 2.01 SIGNS, SIGNALS, AND DEVICES

A. Comply with TMUTCD requirements.

B. Traffic cones and drums, flares and lights: Conform to local jurisdictions' requirements.

C. When working in the Central business district, provide pedestrian pathway

signage approved by the City's Traffic Engineering Branch.

2.02 PORTABLE LOW PROFILE CONCRETE BARRIERS

A. The low profile concrete barrier is a patented design. Information concerning this barrier may be obtained from Texas Transportation Institute, Texas A&M University System, College Station, Texas 77843-3135, (409) 845-1712.

PART 3 E X E C U T I O N

3.01 PUBLIC ROADS

A. Submit requests forms for lane closure and sidewalk closure to the City's Traffic Engineering Branch at least three working days prior to need for blocking vehicular lanes or sidewalks. Do not block lanes or sidewalks without approved permits. Obtain application from the City's Traffic Engineering Branch at 611 Walker, 5th floor or at the following internet address: http://www.ci.houston.tx.us/pwe/mrow/laneclosure.htm.

B. Follow laws and regulations of governing jurisdictions when using public roads. Pay for and obtain permits from jurisdiction before impeding traffic or closing lanes. Coordinate activities with Project Manager.

C. Give Project Manager one-week notice before implementing approved traffic control phases. Inform local businesses of impending traffic control activities.

D. Notified police department, fire department, METRO, and local schools, churches, and businesses in writing a minimum of five business days prior to beginning work.

E. Maintain 10-foot wide all-weather lanes adjacent to the Work for emergency vehicle use. Keep all-weather lanes free of construction equipment and debris.

F. Do not to obstruct normal flow of traffic from 7:00 a.m. to 9:00 a.m. and 4:00 p.m. to 6:00 p.m. on designated major arterials or as directed by Project Manager.

G. Maintain local driveway access to residential and commercial properties adjacent to work areas at all times. Use all-weather materials approved by Project Manager to maintain temporary driveway access to commercial and residential driveways.

H. Keep streets entering and leaving job site free of excavated material, debris, and foreign material resulting from construction operations in compliance with

applicable ordinances.

I. Remove existing signage and striping that conflict with construction activities or that may cause driver confusion.

J. Provide safe access for pedestrians along major cross streets.

K. Alternate closures of cross streets so that two adjacent cross streets are not closed simultaneously.

L. Do not close more than two consecutive esplanade openings at a time without prior approval from Project Manager.

3.02 CONSTRUCTION PARKING CONTROL

A. Control vehicular parking to prevent interference with public traffic and parking, access by emergency vehicles, and the City's operations.

B. Monitor parking of construction personnel's vehicles in existing facilities. Maintain vehicular access to and through parking areas.

C. Prevent parking on or adjacent to access roads or in non-designated areas.

3.03 FLARES AND LIGHTS

A. Provide flares and lights during hours of low visibility to delineate traffic lanes and to guide traffic.

3.04 HAUL ROUTS

A. Utilize haul routes designated by authorities or shown on drawings for construction traffic.

B. Confine construction traffic to designated haul routes.

C. Provide traffic control at critical areas of haul routes to regulate traffic and minimize interference with public traffic.

3.05 TRAFFIC SIGNS AND SIGNALS

A. Construct necessary traffic control devices for temporary signals required to complete the Work including loop detectors, traffic signal conduits, traffic signal wiring and crosswalk signals. Notify the City's Traffic Engineering Branch a minimum of 60 days in advance of need for control boxes and switchgear. The City will perform necessary service, programming or adjustments, to signal boxes and switchgear if required during construction.

B. Install and operate traffic control signals to direct and maintain orderly traffic flow in areas under Contractor's control affected by Contractor's operations. Post notices, signs and traffic controls before moving into next phase of traffic control.

C. Relocate traffic signs and signals as the Work progresses to maintain effective traffic control.

D. Unless otherwise approved by Project Manager, provide driveway signs with name of business that can be accessed from each crossover. Use two signs for each crossover.

E. Replace existing traffic control devices in Project area.

F. Project Manager may direct Contractor to make minor adjustments to traffic control signage to eliminate driver confusion and maintain orderly traffic flow during construction at no additional cost to the City.

3.06 BRIDGING TRENCHES AND EXCAVATIONS

A. When necessary, construct bridges over trenches and excavation to permit an unobstructed flow of traffic across construction areas and major drives. Use steel plates of sufficient thickness to support H-20 loading and install to operate with minimum noise.

B. Shore trench or excavation to support bridge and traffic.

C. Secure bridging against displacement with adjustable cleats, angles, bolts or other devices when:

1. bridging is placed over existing bus routes,

2. more than five percent of daily traffic is comprised of commercial or truck traffic,

3. more than two separate plates are used for bridging, and

4. when bridge is to be used for more than five consecutive days.

D. Extend steel plates used for bridging a minimum of 1 foot beyond edges of trench or excavation. Use temporary paving materials such as premix to feather edges of plates to minimize wheel impact on secured bridging.

3.07 REMOVAL

A. Remove equipment and devices when no longer required.

B. Repair damage caused by installation.

C. Remove post settings to a depth of 2 feet.

3.08 TRAFFIC CONTROL, REGULATION AND DIRECTION

A. Use Flagmen to control, regulate and direct an even flow and movement of vehicular and pedestrian traffic, for periods of time as may be required to provide for public safety and convenience, where:

1. multi-lane vehicular traffic must be diverted into single lane vehicular traffic,

2. vehicular traffic must change lanes abruptly,

3. construction equipment must enter or cross vehicular traffic lanes and walks,

4. construction equipment may intermittently encroach on vehicular traffic lanes and unprotected walks and crosswalk,

5. traffic regulation is needed due to rerouting of vehicular traffic around the Work site, and

6. where construction activities might affect public safety and convenience.

B. Use of Flagmen to assist in the regulation of traffic flow and movement does not relieve Contractor of responsibility to take other means necessary to protect the Work and public.

3.09 INSTALLATION STANDARDS

A. Place temporary pavement for single lane closures, in accordance with TMUTCD.

B. Reinstall temporary and permanent pavement markings as approved by Project Manager. When weather conditions do not allow application according to manufacturer's requirements, alternate markings may be considered. Submit proposed alternate to Project Manager for approval prior to installation. No additional payment will be made for use of alternate markings.

3.10 MAINTENANCE OF EQUIPMENT AND MATERIAL

A. Submit name, address and telephone number of individual designated to be

responsible for maintenance of traffic handling at construction site to Project Manager. Individual must be accessible at all times to immediately correct deficiencies in equipment and materials used to handle traffic including missing, damaged, or obscured signs, drums, barricades, or pavement markings.

B. Inspect signs, barricades, drums, lamps and temporary pavement markings daily to verify that they are visible, in good working order, and conform with traffic handling plans as approved by Project Manager. Immediately repair, clean, relocate, realign, or replace equipment or materials that are not in compliance.

C. Keep equipment and materials, signs and pavement markings, clean and free of dust, dirt, grime, oil, mud, or debris.

D. Obtain approval of Project Manager to reuse damaged or vandalized signs, drums, and barricades.

END OF SECTION

Section 01562

# TREE AND PLANT PROTECTION

## PART 1 GENERAL

### 1.01 SECTION INCLUDES

A. Tree and plant protection.

B. Minimum qualifications of Arborist and Urban Forester.

### 1.02 MEASUREMENT AND PAYMENT

A. Payment for Tree Protection, including tree pruning or tree removal, shall be paid as a Lump Sum basis that shall include all items specified in this section unless payment is specified otherwise in this section

B Payment for Zero Curb Cutback will be on a per linear foot basis.

C. Payment for Checker Plate will be on a square foot basis.

D. Refer to Section 01270-Measurement and Payment for unit price procedures.

### 1.03 SUBMITTALS

A. Conform to requirements of Section 01330 – Submittal Procedures.

B. Submit name and experience of qualified Arborist, proposed for use on the Work, to Project Manager.

### 1.04 PROJECT CONDITIONS

A. Preserve and protect existing trees and plants to remain from foliage, branch, trunk, or root damage that could result from construction operations.

B. Prevent following types of damage:

1. Compaction of root zone by foot or vehicular traffic, or material storage.

2. Trunk damage from equipment operations, material storage, or from nailing or bolting.

3. Trunk and branch damage caused by ropes or guy wires.

4. Root or soil contamination from spilled solvents, gasoline, paint, lime slurry, and other noxious materials.

5. Branch damage due to improper pruning or trimming.

6. Damage from lack of water due to:

   a. Cutting or altering natural water migration patterns near root zones.

   b. Failure to provide adequate watering

7. Damage from alteration of soil pH factor caused by depositing lime, concrete, plaster, or other base materials near roots zones.

8. Cutting of roots larger than one inch in diameter.

1.05 DAMAGE ASSESSMENT

A. When trees other than those designated for removal are destroyed or damaged as result of construction operations, remove and replace with same size, species, and variety up to and including 8 inches in trunk diameter. Trees larger than 8 inches in diameter shall be replaced with an 8 inch diameter tree of the same species and variety and total contract amount will be reduced by an amount determined from the following formula and paid to Tree Fund 0.7854 x D2 x $13.25 where D is diameter in inches of tree or shrub trunk measured 12 inches above grade for that portion of the tree which is greater than 8 inches in diameter. A permit must be applied for and approved by the City of Houston, Urban Forestry Division prior to removal of any tree not scheduled for removal in the tree treatment schedule. Contractor shall contact City of Houston, Urban Forestry, at 832-395-8459 to apply for tree removal permit when needed.

PART 2 PRODUCTS

2.01 MATERIALS

A. Pruning Paint: Black latex, water based paint, free of all petroleum products.

B. Fertilizer: Fertilizer shall be a root stimulant that contains at a minimum the following ingredients: Ectomycorrhizal Fungi, VA Mycorrhizal (VAM) Fungi, Rhizosphere Bacillus spp., Kelp Meal Humic Acid, and Soluble Yucca.

C. Tree Protection Fencing: Orange, plastic mesh fenching, 4 feet in height with 6 feet high "t" bar posts installed 10 feet on centers as per drawings.

D. Plastic Root/Soil Protection: Clear polyethylene sheeting, minimum 6 mil, thickness.

## PART 3 EXECUTION

### 3.01 PROTECTION OF EXISTING TREES AND SHRUBS

A. Site preparation work and/or construction work shall not begin in any area where tree preservation measures have not been completed and approved.

B. Protect exposed roots and root zone areas from contamination from stabilization materials and concrete using polyethylene.

C. Cover exposed roots within 4 hours to reduce damage caused by desiccation. Roots may be covered with soil, mulch, polyethylene, or wet burlap to help protect them from drying.

D. Designate limited areas as concrete washout areas. Locate concrete washout areas away from root zones.

E. Install root pruning trenching where designated in tree treatment schedule and shown on the tree protection drawings. Trees scheduled for root pruning are called out specifically in the treatment schedule. Trench shall be located 2 ft. from the edge of proposed waterline or sanitary sewer for trees called out for root pruning for water or fittings, or sanitary sewer in the treatment schedule, 2 ft. from edge of proposed storm sewer pipe for trees called out for root pruning for storm in the treatment schedule, 30" back of proposed curb for trees called out for root pruning for street, and at edge of sidewalk for trees called out for root pruning for sidewalk. Root pruning shall not be performed where there is not adequate space to be located sufficiently away from tree to prevent damage. All pruning must be evaluated by Contractor's Certified Arborist and reviewed and approved by City Forester before being performed. Trench locations shown on tree preservation plan are drawn to scale and should be located in field as drawn on plan. Exact locations shall be approved in the field by engineer and/or project urban forester prior to installation. Trenching depth shall be a minimum of 2 ft. deep and a maximum of 6 inches wide for water, fittings, sanitary sewer, storm, and street. Trenching depth shall be to the anticipated bottom of sidewalk and base material for sidewalk root pruning, roots lower than sidewalk shall not be pruned. All roots shall be cut by trencher, chainsaw, or handsaw to the specified depth. Roots shall be cut cleanly, and or not ripped, torn, or chopped. Trench shall be backfilled and compacted immediately after trenching. Trench shall be installed prior to any clearing and grubbing, excavation for underground, or any other site work.

F. Install tree protection fencing around each tree to be preserved as indicated in the tree treatment schedule and on the tree protection plan.

1. Each tree to be preserved shall be protected with a tree protection fence. The fencing shall be continuous between posts, shall be pulled taut prior to securing to posts, and shall be firmly attached to the posts with a minimum of 4 wire ties.

2. All tree protection fencing shall be installed prior to site work or construction activity. The fence shall be placed in a continuous alignment as shown on the tree protection plan. Fences shown on tree protection plan are drawn to scale and shall be installed as drawn, in the field. In general fences shall be placed 30" back of existing curb or edge of pavement where root pruning or zero curb cutback is not specified, and 6" back of root pruning trench where root pruning is specified and immediately back of curb where zero curb cutback is specified. Exact locations shall be approved by the project urban forester and/or engineer in the field. The Fences shall be placed to protect roots, trunks, and foliage. The contractor shall not remove or relocate tree protection fencing and shall not operate within the limits shown without direct approval of the project urban forester. In areas where the proposed waterline is located in the existing road side ditch and where tree protection fencing can not be installed across the ditch, the fencing shall be installed at the top of outside ditch bank and no bore pits, peep holes, service taps, or any excavation should occur in the area immediately in front of the tree protection fencing for trees called out with "bore" in the Tree Treatment Schedule. The "bore" limits shall be the same as the limits of the tree protection fencing.

3. Storage of equipment or materials will not be allowed inside a fence. Entryways and access into a protected area shall not be provided unless approved by the project urban forester.

4. Damage to tree fences occurring during the progress of the work shall be repaired immediately at no additional cost to owner. Workmen shall be clearly instructed to exercise caution in performance of work near trees being preserved.

5. Tree protection fencing shall be removed by contractor, at no additional costs, upon completion of all construction activity in each work zone area. Tree protection fencing materials used in the first two work zone areas shall be removed and utilized in subsequent work zone areas. Materials and labor shall be paid for each linear foot of fencing installed in first two work areas. All fencing installed in subsequent work zone areas shall be paid for labor only.

G. Boring/Auguring of water lines or sanitary sewer lines

1. Water line or sanitary sewer line shall be bored/augured/ horizontally drilled under

critical root zones areas of trees designated with auger or bore in the tree treatment schedule. The entire area protected with tree protection fencing shall be bored. No bore pits, come through holes, peep holes, push pits, or long or short side service taps shall be allowed in the areas protected by tree protection fencing. The tree protection plan takes into consideration the limits of augering equipment, there should be room for adequately spaced bore pits, peep holes, come through holes, and push pits. Any changes to the location of the tree protection fencing shall be authorized by the project Urban Forester and City Engineer.

H. Hand digging of Service taps and leads

1. Trees called out for Hand dig short side service tap are located in very close proximity to existing short side water meters. Excavating the service tap with machinery would significantly impact the tree and be in violation of the City of Houston's Street Tree Ordinance. These short side service taps shall be excavated with manual labor to expose any roots 1" in diameter and larger. The first 24" of excavation shall be completed manually to expose the roots. Any root 1" in diameter and larger shall remain undamaged, the roots shall not be cut , nor shall the bark and cambium layer be scraped or damaged. Once the roots are exposed, if there is adequate room to utilize a mini-excavator without damaging the roots, the mini-excavator can be utilized to complete the excavation down to the water line. 1" plywood shall be placed on grade to provide root protection in the area of access of the mini-excavator. If roots 1" diameter or larger are cut or damaged, responsible party will be subject to a citation under the Street Tree Ordinance, and may also be required to incur the cost of tree removal and replacement of damaged tree on an inch for inch basis, if required by City of Houston Urban Forestry Division.

2. Trees called out for Hand dig short side or long side service lead are located in very close proximity to existing water meters. Excavating the service lead with machinery would significantly impact the tree and be in violation of the City of Houston's Street Tree Ordinance. Short side leads shall be excavated with manual labor to expose any roots 1" in diameter and larger from the service tap of the meter. Come out hole and excavation required for long service leads shall be excavated with manual labor to expose roots 1" in diameter and larger, from the come out hole to the meter. In each case, all roots 1" in diameter and larger shall remain undamaged, the roots shall not be cut, nor shall the bark and cambium layer be scraped or damaged. If roots 1" diameter or larger are cut or damaged, responsible party will be subject to a citation under the cost of tree removal and replacement of damaged tree on an inch by inch basis, if required by City of Houston Urban Forestry Division.

3. Trees called out for Hand dig sanitary stub up are located in very close proximity to proposed service lead. Excavating the service lead with machinery would significantly impact the tree and be in violation of the City of Houston's Street Tree

Ordinance. Excavation for sanitary stub up shall be completed with manual labor to expose any roots 1" in diameter and larger. The lead shall be bored from face of curb to stub up hole when called out in the tree treatment schedule. Come out and stub up holes shall be excavated with manual labor to expose roots 1" in diameter and larger. In case, all roots 1" in diameter and larger shall remain undamaged, the roots shall not be cut, nor shall the bark and cambium layer be scraped or damaged. If roots 1" diameter or larger are cut or damaged, responsible party will be subject to a citation under the Street Tree Ordinance, and may be required to incur the cost of tree removal and replacement of damaged tree on an inch by inch basis, if required by City of Houston Urban Forestry Division.

4. Long side service taps shall not be located in an area specified to be bored in the tree treatment schedule. Should it be absolutely necessary to locate a long side service tap in an area specified to be bored, the excavation shall be completed as specified in paragraph 1 of this section-Hand digging short side service taps.
5. All water meters and sanitary service leads called out on P&P drawings and visible in the field have been addressed in the Tree Protection Plan. Should any additional meters or lead be found during construction, or in any new meters or leads installed beneath the canopy of any tree, fenced for tree protection, the excavation shall be completed as specified in paragraph 1 and/or 2 of this section and paid for at the unit cost for each included in contract.

I. Pruning of Trees

1. Trees shall be pruned in accordance with the American National Standard for tree pruning, ANSI A300 (Part 1) – 2001 Pruning Revision of ANSI A300-1995 Tree, Shrub and Other Woody Plant Maintenance – Standard Practices. Pruning shall be completed by professional arborists who has received training in proper pruning techniques.

2. Clearance prune designated trees for public streets, sidewalks, and construction areas. Provide minimum 14 feet and maximum of 18 feet of vertical clearance over proposed water trunk lines. Provide minimum of 14 feet and maximum of 16 feet of vertical clearance over proposed street construction, from 24" back of curb on one side to 24" back of curb on the other side. Provide 20' of vertical clearance over proposed storm sewer up to 38" in size, and 30' of vertical clearance for storm sewer larger than 38" in size. Pruning to be installed prior to any construction activity. Contractor shall notify property owner prior to trimming or pruning any trees with trunks located on private property. Exceptions will be made for trees determined to be arboriculturally significant by City of Houston Urban Forestry. Pruning of trees identified will be completed with approval and supervision of City of Houston Urban Forestry.

3. All cuts should be made sufficiently close to the parent limb or trunk without cutting into the branch collar or leaving a protruding stub, so that closure can readily start under normal conditions. All lateral cuts shall be made to a lateral that is least 1/3 the diameter of the parent limb. Clean cuts shall be made at all times.

4. Trees shall be pruned in a manner that will not destroy or alter the natural shape and character of the tree. Apply black latex paint to all fresh wounds on Oak (Quercus) species immediately after each cut is made.

5. Crown cleaning prune designated trees shall include selective removal of dead, diseased, and/or broken limbs.

J. Tree Removal

1. Trees scheduled for removal shall be sawed down and debris hauled from the site the same day. The stump shall be ground to 6" below grade and excess grindings shall be hauled from the site the same day, so that a pile of grindings is not left where the stump was ground. Enough grindings should be left so that an open hole does not remain.

2. Only those trees called out for removal in the Tree Treatment Schedule shall be removed, or otherwise damaged. Should it be determined that any additional trees must be removed, a permit must be applied for and approved from the City of Houston Urban Forestry Division prior to removal. Contractor shall contact Urban Forestry at 832-395-8459.

K. Root Stimulation

1. Deep root stimulate designated trees. Mix fertilizer with wetting agent per label instructions.

2. Stimulate entire root zone area within the dripline of the tree and continue 10 feet beyond the dripline, leaving out areas of anticipated root loss (construction areas).

3. Mixture shall be injected into the top 10 inches of soil under pressure of 150 to 200 psi as soil conditions warrant.

4. Mix in a tank with agitation capability per label instructions. Inject the mixture on a 2.5 ft. square grid at 4 lbs, actual nitrogen per 1,000 sq. ft.

L. Regularly water trees which have received root damage, to eliminate additional stress caused by lack of moisture. Water during periods without adequate rainfall. For example, should 1.0" of rain not be received within a week period, the trees should be thoroughly watered.

March through September, water once every two weeks. October through February, water every three weeks. Water thoroughly to saturate the entire root zone area.

M. Chemically treat tree trunks with evidence of borer activity with the appropriate approved insecticide mixed and applied per the manufacturer's product application recommendations. Trees shall be sprayed within 24 hours after observance of borer activity.

N. Grading and filling around trees.

1. Maintain existing grade within the dripline of trees, unless otherwise indicated.

2. Where existing grade around trees is above new finish grade, under supervision of project urban forester, carefully hand excavate within the dripline to make transition to new finish grade.

3. Where existing grade is below new finish grade, place clean bank sand in a single layer to make the transition to new grade. Do not compact; hand grade to required elevation. Specifically to areas where proposed curb is higher than existing and backfill will be required.

O. Demolition, Forming and Pouring Sidewalks (Sidewalk on Grade)

1. Demolition of existing sidewalks, located in or adjacent to the limits of tree protection fencing, shall be completed without disturbing, cutting, or otherwise damaging tree roots and soil located beneath them.

2. The new sidewalk shall be formed at or above the elevation of the existing sidewalk, without disturbing, cutting or otherwise damaging tree roots. Every effort has been made to address tree root and sidewalk elevation issues with information available in the field and on plan and profile sheets. The elevation of every tree root was not available, if tree roots are found to be in conflict with proposed sidewalk, project engineer and urban forester shall be consulted as to how to install sidewalks with minimal impacts to adjacent trees.

3. Checkerplate shall be installed in areas called out only if tree root elevations prohibit construction of ADA compliant sloped concrete sidewalks. Checkerplate shall be installed per detail.

P. Zero curb cutback

1. Disturbance of tree roots or soil behind the existing and/or proposed curb within root zones of trees designated for zero curb cutback shall be prohibited. If the curb can not be removed without disturbing soil or damaging roots back of curb when using

equipment for demolition, the curb shall be broken using a hand held jackhammer and removed by hand.

2. The exposed roots and soil shall be covered immediately after demolition with 6 mil polyethylene in order to avoid desiccation, and contamination by the lime used for road bed stabilization. The polyethylene shall be placed so that it covers the vertical face of soil back of curb and laid back onto the grade 12 inches back of curb. The polyethylene should remain in place, across the entire area specified for zero curb cutback, from the time the existing curb is demolished until the time when the new curb is formed and backfilled. The polyethylene can be pulled up from the vertical face while the road bed is being graded or mixed, to avoid catching the plastic with machinery, but shall be replaced immediately after equipment has completed. The vertical face shall not be exposed for more than 8 hours in any 24 hour period.

3. There shall be no stabilization back of curb in the zero curb cutback areas, or forming with steel forms. The existing grade and roots back of existing curb shall not be disturbed. This may require forming of the new street with wooden forms with stakes inside forms, which may require leaving the forms in place after the street is poured. Should wooden forms be utilized, the wood shall be at minimum a 2x6. The new curb may require hand finishing, as a slip curb machine may not have adequate clearance without disturbing the roots that are to be protected with the zero curb cutback.

4. Roots extending into the street, or on top of the existing curb, in areas to paved shall be cut and removed by hand prior to disturbance or removal with equipment. Roots shall be pruned flush with the proposed back of curb. Roots one inch in diameter and larger shall be cut in a manner to provide a smooth, clean cut surface. Cuts shall be made with the appropriate pruning shears or pruning saws. Roots shall not be chopped or broken.

5. In areas where proposed curb will be may be lower than existing top of curb and tree roots 2" diameter or larger are present, the soil and roots shall not be graded or laid back. The existing elevation shall be maintained and the curb formed to meet elevation or a short elevation difference roots and top of curb maintained.

Q. Demolition, Forming and Pouring of Drive Way Approaches

1. Demolition of existing driveway approaches located beneath the dripline of any tree shall be completed without disturbing, cutting, or otherwise damaging tree roots and soil located beneath them.

2. The new approach shall be formed at or above the elevation of the existing approach where tree roots 2" diameter or larger are present, without disturbing, cutting or

otherwise damaging tree roots. Maximum drive slopes may be needed at bottom of apron to allow forming of drive over tree roots at top of drive. As with sidewalks, the elevation of every tree roots was not available in design. If tree roots are found to be in conflict with proposed approach, project engineer and urban forester shall be consulted as to how to install drive way with minimal impacts to adjacent trees.

R. Replacement Trees for Tree Removals under Ordinance

1. Location, species, and size of replacement trees are indicated on the drawings. Contractor shall layout individual trees at locations shown on drawings. Contractor shall layout individual trees at locations shown on drawings and be responsible for utility locate requirements. In case of conflicts, notify City Engineer and City Urban Forestry before proceeding with work. Trees shall be laid out and locations approved by City Engineer prior to planting.

2. Trees shall meet and be planted according to City of Houston Standard Specification 02915.

S. Arborist and Urban Forester Qualifications

1. Arborist – Employ qualified arborist acceptable to City's Parks and Recreation Department to complete all tree treatments. Arborist shall be normally engaged in the field and have a minimum of 5 years experience. Qualifications of the selected arborist shall be submitted for review and approval by the project engineer and City of Houston.

2. Urban Forester – An Urban forester shall be hired to monitor and assist with field layout (exact locations of fencing, root pruning, and zero curb cutback) of the tree preservation program during demolition and construction to ensure tree protection procedures and techniques are practiced as specified to address concerns and conditions which occur in the field. At a minimum, the individual responsible for monitoring and field layout of the tree protection shall have a minimum of 5 years of experience as a consultant, and shall not be affiliated with a tree care contractor in the Houston area. Qualifications of the selected urban forester shall be submitted for review and approval by the project engineer and City of Houston Urban Forestry Department.

END OF SECTION

Section 01570

# STORM WATER POLLUTION PREVENTION CONTROL

## PART 1 G E N E R A L

### 1.01 SECTION INCLUDES

A. Implementation of Storm Water Pollution Prevention Plans (SWP3) described in Section 01410 – TPDES Requirement.

B. Installation, maintenance and removal, of storm water pollution prevention structures: diversion dikes, interceptor dikes, diversion swales, interceptor swales, down spout extenders, pipe slope drains, paved flumes and level spreaders. Structures are used during construction and prior to final development of the site.

C. Filter Fabric Barriers:

1. Type 1: Temporary filter fabric barrier for erosion and sediment control in non-channelized flow areas.

2. Type 2: Temporary reinforced filter fabric barrier for erosion and sediment control in channelized flow areas.

D. Hay Bale Fence.

E. Drop Inlet Basket

F. Inlet Sediment Traps

G. Brush Berm

H. Sand Bag Barrier

I. Bagged Gravel Barrier

J. Sediment Basin

K. Inlet Protection Barrier

### 1.02 MEASUREMENT AND PAYMENT

A. UNIT PRICES

1. Payment for filter fabric barrier is on a linear foot basis measured between limits of beginning and ending of stakes.

2. Payment for reinforced filter fabric barrier is on a linear foot basis measured between limits of beginning and ending of stakes.

3. Payment for drop inlet baskets is on a unit price basis for each drop inlet basket.

4. Payment for storm inlet sediment traps is on a unit price basis for each storm inlet sediment trap.

5. Payment for storm water pollution prevention structures is on a lump sum basis for the project. Earthen structures with outlet and piping include diversion dikes, interceptor dikes, diversion swales, interceptor swales, and excavated earth-outlet sediment trap, embankment earth-outlet sediment trap, down spout extenders, pipe slope drains, paved flumes, stone outlet sediment trap, and level spreaders.

6. Payment for hay bale barrier, if included in Document 00410 - Bid Form, is on a linear foot of accepted bale barriers, if not include in cost of storm water pollution prevention structures.

7. Payment for brush berm, if included in Document 00410 - Bid Form, is on a linear foot of accepted brush berm, if not include in cost of storm water pollution prevention structures.

8. Payment for sandbag barrier, if included in Document 00410 - Bid Form, is on a linear foot basis measured between limits of beginning and ending of sandbags, if not include in cost of storm water pollution prevention structures.

9. Payment for bagged gravel barrier, if included in Document 00410 - Bid Form, is on a linear foot basis measured between limits of beginning and ending of bagged gravel barrier, if not include in cost of storm water pollution prevention controls.

10. Payment for inlet protection barriers, if included in Document 00410 - Bid Form, is on a linear foot basis measured along outside face of inlet protection barrier, if not include in cost of storm water pollution prevention structures.

11. Refer to Section 01270 - Measurement and Payment for unit price procedures.

B. Stipulated Price (Lump Sum) Contract. If Contract is Stipulated Price Contract, payment for Work in this Section is included in total Stipulated

1.03 REFERENCE STANDARDS

A. ASTM

1. A 36 – Standard Specification for Carbon Structural Steel.

2. D698 – Standard Test Methods for Laboratory Compaction Characteristics of Soil Using Standard Effort (12,400 ft-lbf/ft3 (600kN-m/m3)).

3. D3786 – Standard Test Method for Hydraulic Bursting Strength for knitted Goods and Nonwoven Fabrics.

4. D 4355 - Standard Test Method for Deterioration of Geotextiles from Exposure to Ultraviolet Light and Water (Xenon-Arc Type Apparatus).

5. D 4491 - Standard Test Methods for Water Permeability of Geotextiles by Permittivity.

6. D 4632 - Standard Test Method for Grab Breaking Load and Elongation of Geotextiles.

7. D 4833 - Standard Test Method for Index Puncture Resistance of Geotextiles, Geomembranes, and Related Products.

8. D 6382 - Standard Practice for Dynamic Mechanical Analysis and Thermogravimetry of Roofing and Waterproofing Membrane Material.

B. Storm Water Management Handbook for Construction Activities prepared by City of Houston, Harris County and Harris County Flood Control District.

1.04 SYSTEM DESCRIPTIONS

A. Filter Fabric Barrier Type 1 and Type 2: Install to allow surface or channel runoff percolation through fabric in sheet-flow manner and to retain and accumulate sediment. Maintain Filter Fabric Barriers to remain in proper position and configuration at all times.

B. Hay Bale Fence: Install to allow surface runoff percolation through hay in sheet-flow manner and to retain and accumulate sediment. Maintain Hay Bale Fence to remain in proper position and configuration at all times.

C. Interceptor Dikes and Swales: Construct to direct surface or channel runoff around the project area or runoff from project area into sediment traps.

D. Drop Inlet Baskets: Install to allow runoff percolation through the basket and to retain and accumulate sediment. Clean accumulation of sediment to prevent clogging and backups.

E. Sediment Traps: Construct to pool surface runoff from construction area to allow sediment to settle onto the bottom of trap.

F. Sand Bags: Are used during construction activities in unstabilized minor swales, ditches, or streambeds when the contributing drainage area is no greater than 2 acres. It is also sediment barrier for stage one Inlet.

G. Bagged Gravel Barrier: Are used during construction activities in unstabilized minor swales, ditches, or streambeds when the contributing drainage area is no greater than 2 acres. It is also sediment barrier for stage two Inlet.

H. Drop Inlet Insert Basket: Is a temporary barrier placed within a storm drain inlet (Lower Portion of Stage I and Upper Portion of Stage II Inlets) consisting of a filter fabric supported by a metal frame work to prevent sediment and other pollutants from entering convey system.

I. Brush Berm: Brush Berm is constructed at the perimeter of a distribute site within the developing area.

1.05 SUBMITTALS

A. Conform to requirements of Section 01330 - Submittal Procedures.

B. Submit manufacturer's literature for product specifications and installation instructions.

C. Submit manufacturers catalog sheets and other product data on geotextile or filter fabrics, outlet pipe, perforated riser and connectors.

D. Submit proposed methods, equipment, materials, and sequence of operations for storm-water pollution prevention structures.

E. Submit shop drawings for Drop Inlet Baskets.

PART 2 P R O D U C T S

2.01 CONCRETE

A. Concrete: Class B in accordance with Section 03315 – Concrete for Utility Construction or as shown on the Drawings.

2.02 AGREGATE MATERIALS

A. Use poorly graded cobbles with diameter greater than 3 inches and less than 5 inches.

B. Provide gravel lining in accordance with Section 2320 – Utility Backfill Materials or as shown on the drawings.

C. Provide clean cobbles and gravel consisting of crushed concrete or stone. Use clean, hard crushed concrete or stone free from adherent coatings, salt, alkali, dirt, clay, loam, shale, soft or flaky materials, or organic matter.

D. Sediment Pump Pit Aggregate: Use nominal 2-inch diameter river gravel.

2.03 PIPE

A. Polyethylene culvert pipe or PVC sewer pipe in accordance with Section 02505- High Density Polyethylene (HDPE) Solid and Profile Wall Pipe and Section 02506 Polyvinyl Chloride Pipe or as shown on the Drawings.

B. Inlet Pipes: Galvanized steel pipe in accordance with Section 02642 Corrugated Metal Pipe or as shown on the Drawings.

C. Standpipe for Sediment Pump Pits: Galvanized round culvert pipe or round PVC pipe, minimum of 12-inch and a maximum of 24-inch diameter, perforate at 6 to 12 inch centers around circumference.

2.04 GEOTEXTILE FILTER FABRIC

A. Woven or nonwoven geotextile filter fabric made of either polypropylene, polyethylene, ethylene, or polyamide material, in continuous rolls of longest practical length.

B. Grab Strength: 100 psi in any principal direction (ASTM D-4632), Mullen burst strength >200 psi (ASTM D-3786), and equivalent opening size between 50 and 140.

C. Furnish ultraviolet inhibitors and stabilizers for minimum 6 months of expected usable construction life at temperature range of 0 degrees F to 120 degrees F.

D. Mirafi, Inc., Synthetic Industries, or equivalent

2.05 BARRIER

A. Wire Barrier: Woven galvanized steel wire, 14 gauge by 6-inch square mesh spacing, minimum 24 inch roll or sheet width of longest practical length.

B. Barrier Stakes: Nominal 2 by 2 inch moisture-resistant treated wood or steel posts (min. of 1.25 lbs. per linear foot and Brinell Hardness greater than 140) with safety caps on top; length as required for minimum 8 inch bury and full

height of filter fabric.

2.06 SANDBAGS

A. Provide woven material made of polypropylene, polyethylene, or polyamide material.

1. Minimum unit weight of four ounces per square yard.

2. Minimum grab strength of 100 lbs in any principal direction (ASTM D4632)

3. Mullen burst strength exceeding 300 lbs (ASTM D4833).

4. Ultraviolet stability exceeding 70 percent. After 500 hours of exposure (ASTM 4355).

5. Size: Length:18 to 24 inches. Width: 12 to 18 inches. Thickness: 6 to 8 inches. Weight: Approximately 40 to 50 pounds not to exceed 75 pounds.

2.07 Bagged gravel Barrier

1. Minimum unit weight of four ounces per square yard.

2. Minimum grab strength of 100 lbs in any principal direction (ASTM D4632)

3. Mullen burst strength exceeding 300 lbs (ASTM D4833).

4. Ultraviolet stability exceeding 70 percent. After 500 hours of exposure (ASTM 4355).

5. Size: Length:18 to 24 inches. Width: 12 to 18 inches. Thickness: 6 to 8 inches. Weight: Approximately 40 to 50 pounds not to exceed 75 pounds.

2.08 DROP INLET BASKET

A. Provide steel frame members in accordance with ASTM A36.

B. Construct top frame of basket with two short sides of 2 inch by 2 inch and single long side of 1 inch by 1 inch, 1/8 inch angle iron. Construct basket hangers of 2 inch by 1/4 inch iron bars. Construct bottom frame of 1 inch by 1/4 inch iron bar or 1/4 inch plate with center 3 inches removed. Use minimum 1/4 inch diameter iron rods or equivalent for sides of inlet basket.

Weld minimum of 14 rods in place between top frame/basket hanger and bottom frame. Exact dimensions for top frame and insert basket will be determined based on dimensions of type of inlet being protected.

2.09 HAY BALE

A. Hay: Standard-baled agricultural hay bound by wire, nylon, or polypropylene rope. Do not use jute or cotton binding.

B. Hay Bale Stakes (applicable where bales are on soil): No. 3 (3/8 diameter) reinforcing bars, deformed or smooth at Contractor's option, length as required for minimum 18 inch bury and full height bales.

PART 3 E X E C U T I O N

3.01 PREPARATION, INSTALLATION AND MAINTEINANCE

A. Provide erosion and sediment control structures at locations shown on the Drawings.

B. Do not clear, grub or rough cut until erosion and sediment control systems are in place unless approved by Project Manger to allow installation of erosion and sediment control systems, soil testing and surveying.

C. Maintain existing erosion and sediment control systems located within project site until acceptance of Project or until directed by Project Manger to remove and discard existing system.

D. Regularly inspect and repair or replace damaged components of erosion and sediment control structures. Unless otherwise directed, maintain erosion and sediment control structure until project area stabilization is accepted. . Redress and replace granular fill at outlets as needed to replenish depleted granular fill. Remove erosion and sediment control structures promptly when directed by Project Manger. Dispose of materials in accordance with Section 01576 - Waste Material Disposal.

E. Remove and dispose sediment deposits at the designated spoil site for the Project. If a project spoil site is not designated on Drawings, dispose of sediment off site at approved location in accordance with Section 01576 - Waste Material Disposal.

F. Unless otherwise shown on the Drawings, compact embankments, excavations, and trenches in accordance with Section 02315 Roadway

Excavation or Section 2317 Excavation and Backfill for Utilities.

G. Prohibit equipment and vehicles from maneuvering on areas outside of dedicated right of way and easements for construction. Immediately repair damage caused by construction traffic to erosion and sediment control structures.

H. Protect existing trees and plants in accordance with Section 1562 – Tree and Plant Protection.

3.02 SEDIMENT TRAPS

A. Install sediment traps so that surface runoff shall percolate through system in sheet flow fashion and allow retention and accumulation of sediment.

B. Inspect sediment traps after each rainfall, daily during periods of prolonged rainfall, and at a minimum once each week. Repair or replace damaged sections immediately.

C. Use fill material for embankment in accordance with Section 02320 – Utility Backfill Materials.

D. Excavation length and height shall be as specified on Drawings. Use side slopes of 2:1 or flatter.

E. Stone outlet sediment traps:

1. Maintain minimum of 6 inches between top of core material and top of stone outlet, minimum of 4 inches between bottom of core material and existing ground and minimum of 1 foot between top of stone outlet and top of embankment.

2. Embed cobbles minimum of 4 inches into existing ground for stone outlet. Core shall be minimum of 1 foot in height and in width and wrapped in triple layer of geotextile filter fabric.

F. Sediment Basin with Pipe Outlet Construction Methods: Install outlet pipe and riser as shown on the Drawings.

G. Remove sediment deposits when design basin volume is reduced by one-third or sediment level is one foot below principal spillway crest, whichever is less.

3.03 FILTER FABRIC BARRIER CONSTRUCTION METHODS

A. Fence Type 1: Filter Fabric: Barrier

1. Install stakes 3 feet on center maximum and firmly embed minimum 8 inches in soil. If filter fabric is factory preassembled with support netting, then maximum support spacing is 8 feet. Install wood stakes at a slight angle toward the source of anticipated runoff.

2. Trench in the toe of the fence lines so the downward face of the trenches is flat and perpendicular to direction of flow. V-trench configuration as shown on Drawings may also be used.

3. Lay fabric along edges of trenches in longest practical continuous runs to minimize joints. Make joints only at a support post. Splice with minimum 6-inch overlap and seal securely.

4. Staple filter fabric to stakes at maximum 3 inches on center. Extend fabric minimum 18 inches and maximum 36 inches above natural ground.

5. Backfill and compact trench.

B. Barrier Type 2: Reinforced Filter Fabric Barrier

1. Layout barrier same as for Type 1.

2. Install stakes at 6 feet on center maximum and at each joint in wire fence, firmly embedded 1-foot minimum, and inclined it as for Type 1.

3. Tie wire fence to stakes with wire at 6 inches on center maximum. Overlap joints minimum one bay of mesh.

4. Install trench same as for Type 1.

5. Fasten filter fabric wire fence with tie wires at 3 inches on center maximum.

6. Layout fabric same as for Type 1. Fasten to wire fence with wire ties at 3 inches on center maximum and, if applicable, to stakes above top of wire fence it as for Type 1.

7. Backfill and compact trench.

8. Attach filter fabric to wooden fence stakes spaced a maximum of 6 feet apart or steel fence stakes spaced a maximum of 8 feet apart and embedded a minimum of 12 inches. Install stakes at a slight angle toward source of anticipated runoff.

9. Trench in toe of filter fabric barrier with spade or mechanical trencher so that downward face of trench is flat and perpendicular to direction of flow. A V-trench configuration may also be used. Lay filter fabric along edges of trench. Backfill and compact trench upon completion of Construction.

10. Filter fabric fence shall have a minimum height of 18 inches and a maximum height of 36 inches above natural ground.

11. Cut length of fence to minimize use of joints. When joints are necessary, splice fabric together only at support post with minimum 6 inch overlap and seal securely.

12. When used in swales, ditches or diversions, elevation of barrier at top of filter fabric at flow line location in channel shall be lower than bottom elevation of filter fabric at ends of barrier or top of bank, whichever is less, in order to keep storm water discharge in channel from overtopping bank.

C. Triangular Filter Fabric Barrier Construction Methods

1. Attach filter fabric to wire fencing, 18 inches on each side. Provide a fabric cover and skirt with continuous wrapping of fabric. Skirt should form continuous extension of fabric on upstream side of fence.

2. Secure triangular fabric filter barrier in place using one of the following methods:
   a. Toe-in skirt 6 inches with mechanically compacted material;
   b. Weight down skirt with continuous layer of 3-inch to 5-inch graded rock; or
   c. Trench-in entire structure 4 inches.

3. Anchor triangular fabric filter barrier structure and skirt securely in place using 6-inch wire staples on 2-foot centers on both edges and on skirt, or staked using 18-inch by 3/8-inch diameter re-bar with tee ends.

4. Lap fabric filter material by 6 inches to cover segment joints. Fasten joints with galvanized shoat rings.

3.04 DIKE AND SWALE

A. Unless otherwise indicated, maintain minimum dike height of 18 inches, measured from cleared ground at up slope toe to top of dike. Maintain side slopes of 2:1 or flatter.

B. Dike and Swale Stabilization: When shown on the Drawings, place gravel lining 3 inches thick and compacted into the soil or 6 inches thick if truck crossing is expected. Extend gravel lining across bottom and up both sides of swale minimum height of 8 inches vertically, above bottom. Gravel lining on dike side shall extend up the up slope side of dike a minimum height of 8 inches, measured vertically from interface of existing or graded ground and up slope toe of dike, as shown on Drawings.

C. Divert flow from dikes and swales to sediment basins, stabilized outlets, or sediment trapping devices of types and at locations shown on Drawings. Grade dikes and swales as shown on Drawings, or, if not specified, provide positive drainage with maximum grade of 1 percent to outlet or basin.

D. Clear in accordance with Section 2233 – Clearing and Grubbing Compact embankments in accordance with Section 2315 – Roadway Excavation.

E. Carry out excavation for swale construction so that erosion and water pollution is minimal. Minimum depth shall be 1 foot and bottom width shall be 4 feet, with level swale bottom. Excavation slopes shall be 2:1 or flatter. Clear, grub and strip excavation area of vegetation and root material.

3.05 DOWN SPOUT EXTENDER

A. Down spout extender shall have slope of approximately 1 percent. Use pipe diameter of 4 inches or as shown on the Drawings. Place pipe in accordance with Section 2317 - Bedding and Backfill for Utilities.

3.06 PIPE SLOPE DRAIN

A. Compact soil around and under drain entrance section to top of embankment in lifts appropriately sized for method of compaction utilized.

B. Inlet pipe shall have slope of 1 percent or greater. Use pipe diameter as shown on the Drawings.

C. Top of embankment over inlet pipe and embankments directing water to pipe shall be at least 1 foot higher at all points than top of inlet pipe.

D. Pipe shall be secured with hold-down grommets spaced 10 feet on centers.

E. Place riprap apron with a depth equal to pipe diameter with 2:1 side slopes.

3.07 PAVED FLUME

A. Compact soil around and under the entrance section to top of the embankment in lifts appropriately sized for method of compaction utilized.

B. Construct subgrade to required elevations. Remove and replace soft sections and unsuitable material. Compact subgrade thoroughly and shape to a smooth, uniform surface.

C. Construct permanent paved flumes in accordance with Drawings.

D. Remove sediment from riprap apron when sediment has accumulated to depth of one foot.

3.08 LEVEL SPREADER

A. Construct level spreader on undisturbed soil and not on fill. Ensure that spreader lip is level for uniform spreading of storm runoff.

B. Maintain at required depth, grade, and cross section as specified on Drawings. Remove sediment deposits as well as projections or other irregularities which will impede normal flow.

3.09 INLET PROTECTION BARRIER

A. Place sandbags for Stage I, Bagged gravel for Stage II and filter fabric barriers at locations shown on the SWP3. Maintain to allow minimal inlet in flow restrictions / blockage during storm event.

3.10 DROP INLET BASKET CONSTRUCTION METHODS

A. Fit inlet insert basket into inlet without gaps around insert at locations shown on the SWP3.

B. Support for inlet insert basket shall consist of fabricated metal as shown on Drawings.

C. Push down and form filter fabric to shape of basket. Use sheet of fabric large enough to be supported by basket frame when holding sediment and extend at least 6 inches past frame. Place inlet grates over basket/frame to serve as fabric anchor.

D. Remove sediment deposit after each storm event and whenever accumulation exceeds 1-inch depth during weekly inspections.

3.11 HAY BALE FENCE CONSTRUCTION METHODS

A. Place bales in row with ends tightly abutting adjacent bales. Place bales with bindings parallel to ground surface.

B. Embed bale in soil a minimum of 4 inches.

C. Securely anchor bales in place with Hay Bale Stakes driven through bales a minimum of 18-inches into ground. Angle first stake in each bale toward previously laid bale to force bales together.

D. Fill gaps between bales with straw to prevent water from channeling between bales. Wedge carefully in order not to separate bales.

E. Replace with new hay bale fence every two months or as required by Project Manager.

3.12 BRUSH BERM CONSTRUCTION METHODS

A. Construct brush berm along contour lines by hand placing method. Do not use machine placement of brush berm.

B. Use woody brush and branches having diameter less than 2-inches with 6-inches overlap. Avoid incorporation of annual weeds and soil into brush berm.

C. Use minimum height of 18-inches measured from top of existing ground at upslope toe to top of berm. Top width shall be 24 inches minimum and side slopes shall be 2:1 or flatter.

D. Embed brush berm into soil a minimum of 4-inches and anchor using wire, nylon or polypropylene rope across berm with a minimum tension of 50 pounds. Tie rope securely to 18-inch x 3/8-inch diameter rebar stakes driven into ground on 4-foot centers on both sides of berm.

3.13 STREET AND SIDEWALK CLEANING

A. Keep areas clean of construction debris and mud carried by construction vehicles and equipment. If necessary, install stabilized construction exits at construction, staging, storage, and disposal areas, following Section 01575-Stabilized Construction Exit.

B. In lieu of or in addition to stabilized construction exits, shovel or sweep pavements as required to keep areas clean. Do not waterhose or sweep debris and mud off street into adjacent areas, except, hose sidewalks during off-peak hours, after sweeping.

3.14 WASTE COLLECTION AREAS

A. Prevent water runoff from passing through waste collection areas, and prevent water runoff from waste collection areas migrating outside collection areas.

3.15 EQUIPMENT MAINTENANCE AND REPAIR

A. Confine maintenance and repair of construction machinery and equipment to areas specifically designated for that purpose, so fuels, lubricants, solvents, and other potential pollutants are not washed directly into receiving streams or storm water conveyance systems. Provide these areas with adequate waste disposal receptacles for liquid and solid waste. Clean and inspect maintenance areas daily.

B. Where designated equipment maintenance areas are not feasible, take precautions during each individual repair or maintenance operation to prevent potential pollutants from washing into streams or conveyance systems. Provide temporary waste disposal receptacles.

3.16 VEHICLE/ EQUIPMENT WASHING AREAS

A. Install wash area (stabilized with coarse aggregate) adjacent to stabilized construction access, as required to prevent mud and dirt run-off. Release wash water into drainage swales or inlets protected by erosion and sediment controls. Build wash areas following Section 01575- Stabilized Construction access. Install gravel or rock base beneath wash areas.

B. Wash vehicles only at designated wash areas. Do not wash vehicles such as concrete delivery trucks or dump trucks and other construction equipment at locations where runoff flows directly into waterways or storm water conveyance systems.

C. Locate wash areas to spread out and evaporate or infiltrate wash water directly into ground, or collect runoff in temporary holding or seepage basins.

3.17 WATER RUNOFF AND EROSION CONTROL

A. Control surface water, runoff, subsurface water, and water from excavations and structures to prevent damage to the Work, the site, or adjoining properties. Follow environment requirements.

B. Control fill, grading and ditching to direct water away from excavations, pits, tunnels, and other construction areas, and to direct drainage to proper runoff courses to prevent erosion, sedimentation or damage.

C. Provide, operate, and maintain equipment and facilities of adequate size to control surface water.

D. Retain existing drainage patterns external to the site by constructing temporary earth berms, sedimentation basins, retaining areas, and temporary ground cover as required to control conditions.

E. Plan and execute construction and earth work to control surface drainage from cuts and fills, and from borrow and waste disposal areas, to prevent erosion and sedimentation.

1. Hold area of bare soil exposed at one time to a minimum.

2. Provide temporary controls such as berms, dikes, and drains.

F. Construct fill and waste areas by selective placement to eliminate surface silts or clays which will erode.

G. Inspect earthwork periodically to detect start of erosion. Immediately apply corrective measures as required to control erosion.

H. Dispose of sediments offsite, not in or adjacent to waterways or floodplains, nor allow sediments to flush into streams or drainage ways. Assume responsibility for offsite disposal location.

I. Unless otherwise indicated, compact embankments, excavations, and trenches by mechanically blading, tamping, and rolling soil in maximum of 8-inch layers. Provide compaction density at minimum 90 percent Standard Proctor ASTM D-698-78 density. Make at least one test per 500 cubic yards of embankment.

J. Prohibit equipment and vehicles from maneuver on areas outside of dedicated rights-of-way and easements for construction. Immediately repair damage to erosion and sedimentation control systems caused by construction traffic.

K. Do not damage existing trees intended to remain.

3.18 REMOVAL OF CONTROLS

A. Remove erosion and sediment controls when the site is finally stabilized or as directed by Project Manager.

B. Dispose of sediments and waste products following Section 01505-Temporary Facilities.

END OF SECTION

Section 01575

# STABILIZED CONSTRUCTION ACCESS

## PART 1 GENERAL

### 1.01 SECTION INCLUDES

A. Installation and removal of erosion and sediment control for stabilized construction access used during construction and prior to final development of site, as shown in City of Houston Standard Construction details, DWG No. 01571-01.

### 1.02 MEASUREMENT AND PAYMENT

A. Unit Price Contracts. If Contract is Unit Price Contract, payment for work in this Section will be based on the following:

1. Stabilized construction roads, parking areas, access and wash areas: per square yard of aggregate/recycled concrete without reinforcing placed in 8-inch layers. No separate payment will be made for street cleaning necessary to meet TPDES requirements. Include cost of work for street cleaning under related Specification section.

B. Stipulated Price (Lump Sum) Contracts. If the Contract is a Stipulated Price Contract, include payment for work under this Section in the total Stipulated Price.

### 1.03 SUBMITTALS

A. Conform to requirements of Section 01330 - Submittal Procedures.

B. Submit manufacturer's catalog sheets and other Product Data on geotextile fabric.

C. Submit sieve analysis of aggregates conforming to requirements of this Specification.

### 1.04 REFERENCES

A. ASTM D 4632 - Standard Test Method for Grab Breaking Load and Elongation of Geotextiles.

B. Storm Water Quality Management Handbook For Construction Activities prepared by the City of Houston, Harris County and Harris County Flood Control District.

## PART 2 PRODUCTS

### 2.01 GEOTEXTILE FABRIC

A. Provide woven or non-woven geotextile fabric made of polypropylene, polyethylene, ethylene, or polyamide material.

B. Geotextile fabric: Minimum grab strength of 200 lbs in any principal direction (ASTM D-4632) and equivalent opening size between 50 and 140.

C. Geotextile and threads: Resistant to chemical attack, mildew, and rot and contain ultraviolet ray inhibitors and stabilizers to provide minimum of six months of expected usable life at temperature range of 0 to 120 degrees F.

D. Representative Manufacturers: Mirafi, Inc. or equal.

### 2.02 COARSE AGGREGATES

A. Coarse aggregate: Crushed stone, gravel, crushed blast furnace slag, or combination of these materials. Aggregate shall be composed of clean, hard, durable materials free from adherent coatings of, salt, alkali, dirt, clay, loam, shale, soft or flaky materials, or organic and injurious matter.

B. Coarse aggregates to consist of open graded rock 2" to 8" in size.

## PART 3 EXECUTION

### 3.01 PREPARATION AND INSTALLATION

A. Provide stabilized construction roads and access at construction, staging, parking, storage,
and disposal areas to keep street clean of mud carried by construction vehicles and equipment. Construct erosion and sediment controls in accordance with Drawings and Specification requirements.

B. Do not clear grub or rough cut until erosion and sediment control systems are in place, unless approved by Project Manager to allow soil testing and surveying.

C. Maintain existing construction site erosion and sediment control systems until acceptance of the Work or until removal of existing systems is approved by Project Manager.

D. Regularly inspect, repair or replace components of stabilized construction access. Unless otherwise directed, maintain stabilized construction roads and

access until the City accepts the Work. Remove stabilized construction roads and access promptly when directed by Project Manager. Discard removed materials off-site.

E. Remove and dispose of sediment deposits at designated spoil site for Project. If a spoil site is not designated on Drawings, dispose of sediment off-site at a location not in or adjacent to stream or flood plain. Assume responsibility for off-site disposal.

F. Spread compacted and stabilized sediment evenly throughout site. Do not allow sediment to flush into streams or drainage ways. Dispose of contaminated sediment in accordance with existing federal, state, and local rules and regulations.

G. Prohibit equipment and vehicles from maneuvering on areas outside of dedicated rights-of-way and easements for construction. Immediately repair damage to erosion and sediment control systems caused by construction traffic.

H. Conduct construction operations in conformance with erosion control requirements of Specification 01570 – Storm Water Pollution Control.

3.02 CONSTRUCTION MAINTENANCE

A. Provide stabilized access roads, subdivision roads, parking areas, and other on-site vehicle transportation routes where shown on Drawings.

B. Provide stabilized construction access and vehicle washing areas, when approved by Project Manager, of sizes and at locations shown on Drawings or as specified in this Section.

C. Clean tires to remove sediment on vehicles leaving construction areas prior to entering public right-of-ways. Construct wash areas needed to remove sediment. Release wash water into drainage swales or inlets protected by erosion and sediment control measures.

D. Details for stabilized construction access are shown on Drawings. Construct other stabilized areas to same requirements. Maintain minimum roadway widths of 14 feet for one-way traffic and 20 feet for two-way traffic and of sufficient width to allow ingress and egress. Place geotextile fabric as a permeable separator to prevent mixing of coarse aggregate with underlaying soil. Limit exposure of geotextile fabric to elements between laydown and cover to a maximum 14 days to minimize potential damage.

E. Grade roads and parking areas to provide sufficient drainage away from stabilized areas. Use sandbags, gravel, boards, or similar materials to prevent sediment from entering public right-of-ways, waterways or

storm water conveyance systems.

F. Inspect and maintain stabilized areas daily. Provide periodic top dressing with additional coarse aggregates to maintain required depth. Repair and clean out damaged control systems used to trap sediment. Immediately remove spilled, dropped, washed, or tracked sediment from public right-of-ways.

G. Maintain lengths of stabilized areas as shown on Drawings or a minimum of 50 feet. Maintain a minimum thickness of 8 inches. Maintain minimum widths at all points of ingress or egress.

H. Stabilize other areas with the same thickness, and width of coarse aggregate required for stabilized construction access, except where shown otherwise on Drawings.

I. Stabilized areas may be widened or lengthened to accommodate truck washing areas when authorized by Project Manager.

J. Clean street daily before end of workday. When excess sediments have tracked onto streets, Project Manager may direct Contractor to clean street as often as necessary. Remove and legally dispose of sediments.

K. Use other erosion and sediment control measures to prevent sediment runoff during rain periods and non-working hours and when storm discharges are expected.

END OF SECTION

Section 01576

# WASTE MATERIAL DISPOSAL

## PART 1 GENERAL

### 1.01 SECTION INCLUDES

A. Disposal of waste material and salvageable material.

### 1.02 SUBMITTALS

A. Conform to requirements of Section 01330 - Submittal Procedures.

B. Submit copy of approved "Development Permit", as defined in Chapter 19 of Flood Plain Ordinance (City Ordinance Number 81-914 and Number 85-1705), prior to disposal of excess material in areas designated as being in "100-year Flood Hazard Area" within the City. Contact the City of Houston Flood Plain Manager, 3300 Main Street, at (713) 525-7605 for flood plain information.

C. Obtain and submit disposal permits for proposed disposal sites, if required by local ordinances.

D. Submit copy of written permission from property owner, with description of property, prior to disposal of excess material adjacent to Project. Submit written and signed release from property owner upon completion of disposal work.

E. Describe waste materials expected to be stored on-site and a description of controls to reduce Pollutants from these materials, including storage practices to minimize exposure of materials to storm water; and spill prevention and response measures in the Project's Storm Water Pollution Prevention Plan (SWPPP). Refer to Section 01410 – TPDES Requirements.

## PART 2 PRODUCTS - Not Used

## PART 3 EXECUTION

### 3.01 SALVAGEABLE MATERIAL

A. Excavated Material: When indicated on Drawings, load, haul, and deposit excavated material at location or locations shown on Drawings outside limits of Project.

B. Base, Surface, and Bedding Material: Load shell, gravel, bituminous, or other base and surfacing material designated for salvage into City trucks.

C. Pipe Culvert: Load culverts designated for salvage into City trucks.

D. Other Salvageable Materials: Conform to requirements of individual Specification Sections.

E. Coordinate loading of salvageable material on City trucks with Project Manager.

3.02 EXCESS MATERIAL

A. Remove and legally dispose of vegetation, rubble, broken concrete, debris, asphaltic concrete pavement, excess soil, and other materials not designated for salvage from job site.

B. Excess soil may be deposited on private property adjacent to Project when written permission is obtained from property owner. See Paragraph 1.02 D above.

C. Verify flood plain status of any proposed disposal site. Do not dispose of excavated materials in area designated as within 100-year Flood Hazard Area unless “Development Permit” has been obtained. Remove excess material placed in "100-year Flood Hazard Area" within the City, without “Development Permit", at no additional cost to the City.

D. Remove waste materials from site daily, in order to maintain site in neat and orderly condition.

END OF SECTION

Section 01578

# CONTROL OF GROUND AND SURFACE WATER

## PART 1 GENERAL

### 1.01 SECTION INCLUDES

A. Dewatering, depressurizing, draining, and maintaining trenches, shaft excavations, structural excavations and foundation beds in stable condition, and controlling ground water conditions for tunnel excavations.

B. Protecting work against surface runoff and rising floodwaters.

C. Trapping suspended sediment in the discharge form the surface and ground water control systems.

### 1.02 MEASUREMENT AND PAYMENT

A. UNIT PRICES

1. When noted, dewatering of trench or excavation during course of project shall be measured per linear foot and paid for at contract unit prices for dewatering, when directed to perform such work by Project Manager. Dewatering must be fully detailed in submittal and submittal must be approved prior to performing dewatering work before payment will be made for dewatering. No payment will be made for work unless directed to perform work by Project Manager.

2. Presence of a pump on project does not constitute dewatering for payment under bid item "Ground Water Control for Open Cut Construction."

3. Dewatering required during course of project to lower water table for other utility installation less than 24 inches in diameter, construction of structures, removal of standing water, surface drainage seepage, or to protect against rising waters or floods shall be considered incidental to Work unless otherwise noted.

4. No separate payment will be made for groundwater control associated with augering, tunnels or casing. Include cost in unit price for augering.

5. Refer to Section 01270 - Measurement and Payment for unit price procedures.

B. Stipulated Price (Lump Sum) Contract. If the Contract is a Stipulated Price Contract, include payment for work under this section in the total Stipulated

Price.

1.03 REFERENCES

A. ASTM D 698 - Standard Test Methods for Laboratory Compaction of Soils Using Standard Effort (12,400 ft-lbf/ft3 (600kN-m/m3)

B. Federal Regulations, 29 CFR Part 1926, Standards-Excavation, Occupational Safety and Health Administration (OSHA)

C. Storm Water Management Handbook for Construction Activities prepared by City of Houston, Harris County and Harris County Flood Control District.

1.04 DEFINITIONS

A. Ground water control system: system used to dewater and depressurize water-bearing soil layers.

1. Dewatering: lowering the water table and intercepting seepage that would otherwise emerge from slopes or bottoms of excavations, or into tunnels and shafts; and disposing of removed water. Intent of dewatering is to increase stability of tunnel excavations and excavated slopes, prevent dislocation of material from slopes or bottoms of excavations, reduce lateral loads on sheeting and bracing, improve excavating and hauling characteristics of excavated material, prevent failure or heaving of bottom of excavations, and to provide suitable conditions for placement of backfill materials and construction of structures and other installations.

2. Depressurization: includes reduction in piezometric pressure within strata not controlled by dewatering alone, necessary to prevent failure or heaving of excavation bottom or instability of tunnel excavations.

B. Excavation drainage: includes keeping excavations free of surface and seepage water.

C. Surface drainage: includes use of temporary drainage ditches and dikes and installation of temporary culverts and sump pumps with discharge lines necessary to protect Work from any source of surface water.

D. Monitoring facilities for ground water control system: includes piezometers, monitoring wells and flow meters for observing and recording flow rates.

1.05 PERFORMANCE REQUIREMENTS

A. Conduct subsurface investigations to identify groundwater conditions and to

provide parameters for design, installation, and operation of groundwater control systems. Submit proposed method and spacing of readings for review prior to obtaining water level readings.

B. Design ground water control system, compatible with requirements of Federal Regulations 29 CFR Part 1926 and Section 02260 - Trench Safety Systems, to produce following results:

1. Effectively reduce hydrostatic pressure affecting:

   a. Excavations

   b. Tunnel excavation, face stability or seepage into tunnels

2. Develop substantially dry and stable subgrade for subsequent construction operations

3. Preclude damage to adjacent properties, buildings, structures, utilities, installed facilities and other work

4. Prevent loss of fines, seepage, boils, quick condition, or softening of foundation strata

5. Maintain stability of sides and bottom of excavations

C. Provide ground water control systems that include single-stage or multiple-stage well point systems, eductor and ejector-type systems, deep wells, or combinations of these equipment types.

D. Provide drainage of seepage water and surface water, as well as water from other sources entering excavation. Excavation drainage may include placement of drainage materials, crushed stone and filter fabric, together with sump pumping.

E. Provide ditches, berms, pumps and other methods necessary to divert and drain surface water from excavation and other work areas.

F. Locate ground water control and drainage systems so as not to interfere with utilities, construction operations, adjacent properties, or adjacent water wells.

G. Assume sole responsibility for ground water control systems and for any loss or damage resulting from partial or complete failure of protective measures and settlement or resultant damage caused by ground water control operations. Modify ground water control systems or operations if they cause or threaten to cause damage to new construction, existing site improvements, adjacent property, adjacent water wells, or potentially contaminated areas. Repair damage caused by ground water control systems or resulting from

failure of system to protect property as required.

H. Install an adequate number of piezometers installed at proper locations and depths, necessary to provide meaningful observations of conditions affecting excavation, adjacent structures and water wells.

I. Install environmental monitoring wells at proper locations and depths necessary to provide adequate observations of hydrostatic conditions and possible contaminant transport from contamination sources into work area or ground water control system.

1.06 SUBMITTALS

A. Conform to requirements of Section 01330 - Submittals Procedures.

B. Submit Ground Water and Surface Water Control Plan for review by Project Manager prior to start of excavation work. Include the following:

1. Results of subsurface investigations and description of extent and characteristics of water bearing layers subject to ground water control

2. Names of equipment Suppliers and installation Subcontractors

3. Description of proposed ground water control systems indicating arrangement, location, depth and capacities of system components, installation details and criteria and operation and maintenance procedures

4. Description of proposed monitoring facilities indicating depths and locations of piezometers and monitoring wells, monitoring installation details and criteria, type of equipment and instrumentation with pertinent data and characteristics

5. Description of proposed filters including types, sizes, capacities and manufacturer's application recommendations

6. Design calculations demonstrating adequacy of proposed systems for intended applications. Define potential area of influence of ground water control operation near contaminated areas.

7. Operating requirements, including piezometric control elevations for dewatering and depressurization

8. Excavation drainage methods including typical drainage layers, sump pump application and other means

9. Surface water control and drainage installations

10. Proposed methods and locations for disposing of removed water

C. Submit following records upon completion of initial installation:

1. Installation and development reports for well points, eductors, and deep wells

2. Installation reports and baseline readings for piezometers and monitoring wells

3. Baseline analytical test data of water from monitoring wells

4. Initial flow rates

D. Submit the following records weekly during control of ground and surface water operations:

1. Records of flow rates and piezometric elevations obtained during monitoring of dewatering and depressurization. Refer to Paragraph 3.02, Requirements for Eductor, Well Points, or Deep Wells.

2. Maintenance records for ground water control installations, piezometers and monitoring wells

1.07 ENVIRONMENTAL REQUIREMENTS

A. Comply with requirements of agencies having jurisdiction.

B. Comply with Texas Commission on Environmental Quality regulations and Texas Water Well Drillers Association for development, drilling, and abandonment of wells used in dewatering system.

C. Obtain necessary permits from agencies with jurisdiction over use of groundwater and matters affecting well installation, water discharge, and use of existing storm drains and natural water sources. Since review and permitting process may be lengthy, take early action to obtain required approvals.

D. Monitor ground water discharge for contamination while performing pumping in vicinity of potentially contaminated sites.

PART 2 P R O D U C T S

2.01 EQUIPMENT AND MATERIALS

A. Select equipment and materials necessary to achieve desired results for dewatering. Selected equipment and materials are subject to review by Project Manager through submittals required in Paragraph 1.06, Submittals.

B. Use experienced contractors, regularly engaged in ground water control system design, installation, and operation, to furnish and install and operate educators, well points, or deep wells, when needed

C. Maintain equipment in good repair and operating condition.

D. Keep sufficient standby equipment and materials available to ensure continuous operation, where required.

E. Portable Sediment Tank System: Standard 55-gallon steel or plastic drums, free of hazardous material contamination.

1. Shop or field fabricate tanks in series with main inlet pipe, inter-tank pipes and discharge pipes, using quantities sufficient to collect sediments from discharge water.

## PART 3 EXECUTION

### 3.01 GROUND WATER CONTROL

A. Perform necessary subsurface investigation to identify water bearing layers, piezometric pressures and soil parameters for design and installation of ground water control systems. Perform pump tests, if necessary to determine draw down characteristics. Present results in the Ground Water and Surface Water Control Plan. submittal

B. Provide labor, material, equipment, techniques and methods to lower, control and handle ground water in manner compatible with construction methods and site conditions. Monitor effectiveness of installed system and its effect on adjacent property.

C. Install, operate, and maintain ground water control systems in accordance with the Ground Water and Surface Water Control Plan. Notify Project Manager in writing of changes made to accommodate field conditions and changes to Work. Provide revised drawings and calculations with notification.

D. Provide continuous system operation, including nights, weekends, and holidays. Arrange appropriate backup if electrical power is primary energy source for dewatering system.

E. Monitor operations to verify systems lower ground water piezometric levels at rate required to maintain dry excavation resulting in stable subgrade for

subsequent construction operations.

F. Depressurize zones where hydrostatic pressures in confined water bearing layers exist below excavations to eliminate risk of uplift or other instability of excavation or installed works. Define allowable piezometric elevations in the Ground Water and Surface Water Control Plan.

G. Removal of ground water control installations.

1. Remove pumping system components and piping when ground water control is no longer required.

2. Remove piezometers, including piezometers installed during design phase investigations and left for Contractor's use, upon completion of testing, as required in accordance with Part 3 of applicable specification.

3. Remove monitoring wells when directed by Project Manager.

4. Grout abandoned well and piezometer holes. Fill piping that is not removed with cement-bentonite grout or cement-sand grout.

H. During backfilling, maintain water level a minimum of 5 feet below prevailing level of backfill. Do not allow the water level to cause uplift pressures in excess of 80 percent of downward pressure produced by weight of structure or backfill in place. Do not allow water levels to rise into cement-stabilized sand until at least 48 hour after placement.

I. Provide uniform pipe diameter for each pipe drain run constructed for dewatering. Remove pipe drains when no longer required. If pipe removal is impractical, grout connections at 50-foot intervals and fill pipe with cement-bentonite grout or cement-sand grout after removal from service.

J. The extent of ground water control for structures with permanent perforated underground drainage systems may be reduced, for units designed to withstand hydrostatic uplift pressure. Provide a means to drain affected portions of underground systems, including standby equipment. Maintain drainage systems during construction operations.

K. Remove systems upon completion of construction or when dewatering and control of surface or ground water is no longer required.

L. Compact backfill to not less than 95 percent of maximum dry density in accordance with ASTM D 698.

M. Foundation Slab: Maintain saturation line at least 3 feet below lowest elevations where concrete is to be placed. Drain foundations in areas where

concrete is to be placed before placing reinforcing steel. Keep free from water for 3 days after concrete is placed.

3.02 REQUIREMENTS FOR EDUCTOR, WELL POINTS, OR DEEP WELLS

A. For aboveground piping in ground water control system, include a 12-inch minimum length of clear, transparent piping between each eductor well or well point and discharge header to allow visual monitoring of discharge from each installation.

B. Install sufficient piezometers or monitoring wells to show that trench or shaft excavations in water bearing materials are pre-drained prior to excavation. Provide separate piezometers for monitoring of dewatering and for monitoring of depressurization. Install piezometers and monitoring wells for tunneling as appropriate for selected method of work.

C. Install piezometers or monitoring wells at least one week in advance of the start of associated excavation.

D. Dewatering may be omitted for portions of under drains or other excavations, where auger borings and piezometers or monitoring wells show that soil is pre-drained by existing systems and that ground water control plan criteria are satisfied.

E. Replace installations that produce noticeable amounts of sediments after development.

F. Provide additional ground water control installations, or change method of control if, ground water control plan does not provide satisfactory results based on performance criteria defined by plan and by specifications. Submit revised plan according to Paragraph 1.06B.

3.03 SEDIMENT TRAPS

A. Install sediment tank as shown on approved plan.

B. Inspect daily and clean out tank when one-third of sediment tank is filled with sediment.

3.04 SEDIMENT SUMP PIT

A. Install sediment sump pits as shown on approved plan.

B. Construct standpipe by perforating 12 inch to 24-inch diameter corrugated metal or PVC pipe.

C. Extend standpipe 12 inches to 18 inches above lip of pit.

D. Convey discharge of water pumped from standpipe to sediment trapping device.

E. Fill sites of sump pits, compact to density of surrounding soil and stabilize surface when construction is complete.

3.05 EXCAVATION DRAINAGE

A. Use excavation drainage methods if well-drained conditions can be achieved. Excavation drainage may consist of layers of crushed stone and filter fabric, and sump pumping, in combination with sufficient ground water control wells to maintain stable excavation and backfill conditions.

3.06 MAINTENANCE AND OBSERVATION

A. Conduct daily maintenance and observation of piezometers or monitoring wells while ground water control installations or excavation drainage is operating at the site, or water is seeping into tunnels, and maintain systems in good operating condition.

B. Replace damaged and destroyed piezometers or monitoring wells with new piezometers or wells as necessary to meet observation schedules.

C. Cut off piezometers or monitoring wells in excavation areas where piping is exposed, only as necessary to perform observation as excavation proceeds. Continue to maintain and make specified observations

D. Remove and grout piezometers inside or outside of excavation area when ground water control operations are complete. Remove and grout monitoring wells when directed by Project Manager.

3.07 MONITORING AND RECORDING

A. Monitor and record average flow rate of operation for each deep well, or for each wellpoint or eductor header used in dewatering system. Also, monitor and record water level and ground water recovery. Record observations daily until steady conditions are achieved and twice weekly thereafter.

B. Observe and record elevation of water level daily as long as ground water control system is in operation, and weekly thereafter until Work is completed or piezometers or wells are removed, except when Project Manager determines more frequent monitoring and recording are required. Comply with Project Manager's direction for increased monitoring and recording and

take measures necessary to ensure effective dewatering for intended purpose.

3.08 SURFACE WATER CONTROL

A. Intercept surface water and divert it away from excavations through use of dikes, ditches, curb walls, pipes, sumps or other approved means. Requirement includes temporary works required to protect adjoining properties from surface drainage caused by construction operations.

B. Divert surface water and seepage water into sumps and pump it into drainage channels or storm drains, when approved by agencies having jurisdiction. Provide settling basins when required by agencies.

END OF SECTION

Section 01580

# PROJECT IDENTIFICATION SIGNS

## PART 1 GENERAL

### 1.01 SECTION INCLUDES

A. Project identification sign description.

B. Project sign installation.

C. Maintenance and removal of Project sign.

### 1.02 SYSTEM DESCRIPTION

A. Sign Construction: Construct signs of new materials in accordance with Standard Detail provided at the Pre-construction Conference.

B. Appearance: Maintain signs to present a clean and neat look throughout Contract duration.

C. Sign Manufacturer: Experienced professional sign company.

D. Sign Placement: At locations shown in Drawings unless otherwise specified by Project Manager at pre-construction meeting.

1. Provide one sign at each end of a linear Project involving paving, overlay, sewer line, storm drainage, or water main construction located in rights-of-ways.

2. Provide one sign for site or building construction Contracts

3. Provide one sign at each site for Contracts with multiple sites.

4. Sign Relocation: As work progresses, relocate signs if directed by Project Manager in writing. Include cost for one relocation of post-mounted signs in Contract Price. Subsequent relocations, if directed by Project Manager in writing, will be subject to Change Order.

E. Skid-mounted signs: Use for projects with noncontiguous locations where work progresses from one location to another. Design skid structure to withstand a 60 mile-per-hour wind load to the face or back of sign using stakes, straps, or ballast. Contractor shall be responsible for security of signs at each site.

1.03 SUBMITTALS

A. Submit Shop Drawings under provisions of Section 01330 - Submittal Procedures.

B. Show content, layout, lettering style, lettering size, and colors. Make sign and lettering to scale, clearly indicating condensed lettering, if used.

PART 2 P R O D U C T S

2.01 SIGN MATERIALS

A. Structure and Framing: Use new sign materials.

1. Sign Posts: 4-inch by 4-inch pressure treated wood posts, 9 feet long for skid mounting and 12 feet long minimum for in-ground mounting.

2. Skid Bracing: 2-inch by 4-inch wood framing material.

3. Skid Members: 2-inch by 6-inch wood framing material.

4. Fasteners:
   a. Galvanized steel.
   b. Attach sign to posts with 1/2-inch by 5-1/2 inch button head carriage bolts and secure with nuts and flat head washers.
   c. Cover button heads with white reflective film or paint to match sign background.
   d. Use metal brackets and braces and 3/4-inch wood screws to attach sign header.

B. Sign and Sign Header: 3/4-inch thick marine plywood. Use 4-foot by 8 -foot sheet for the sign and a single piece for the header to minimize joints. Do not piece wood sheets to fabricate sign face.

C. Paint and Primers: White industrial grade, fast-drying, oil-based paint with gloss finish for structural and framing members, sign, and sign header material surfaces. Paint all sign surfaces prior to adding adhesive applications.

D. Colors:

1. Sign Background: Reflective white 3M Scotchlite Engineer Grade, Pressure Sensitive Sheeting (White), or approved equal.

2. Border: For red border around area, which designates project name and project amount, use reflective red 3M Scotchlite Engineer Grade, Pressure Sensitive Sheeting (Red), or approved equal.

3. Sign Film: 3M Scotchcal Pressure Sensitive Films, or approved equal for legends, symbols, lettering, and artwork. Match colors to 3M Scotchcal Pressure Sensitive Films.

| | | |
|---|---|---|
| a. | Lettering Below Seal: | Black |
| b. | Lettering Above Project Name: | Vivid Blue |
| c. | Lettering on Blue Background: | White |
| d. | Background Behind Project Name: | Vivid Blue |

E. City Seal: Project Manager will provide City seals to Contractor, as needed.

2.02 SIGN LAYOUT

A. Lettering:

1. Style, Size, and Spacing: Helvetica Regular lettering.

2. Condensed Style: Text may be condensed if needed to maintain sign composition.

B. Composition:

1. Lines with Standard Text
   a. Top line shall read "BUILDING TOGETHER FOR THE FUTURE".
   b. Use lower left below City Seal to list names and titles for Mayor, Controller and Council Members. Place as shown on Drawings with indicated size and spacing.
   c. Center telephone number of the Customer Response Center, "311", near the bottom of the area with the blue background.

2. Lines with Variable Text. Use blue background space for Project name and dollar amount.
   a. Project Manager will provide Project name and dollar amount of Project for preparation of sign. Center name on one or two lines, and dollar amount immediately below Project name, in area with blue background. Use condensed lettering if necessary.

2.03 LAYOUT AND COMPOSITION FOR HEADER

A. City of Houston Seal:
1. A space of approximately 24 inches in diameter is provided for the City seal, the top 6 inches of which extends above the sign on the sign header.

2. Construct sign header of same material as sign face. Cut material to match curve of the City seal.

3. Project Manager will provide the seal to be affixed to the sign by sign maker.

PART 3 E X E C U T I O N

3.01 INSTALLATION

A. Install Project identification signs within seven days after Date of Commencement of the Work.

B. Erect signs at locations shown in Drawings unless otherwise designated by Project Manager at pre-construction meeting. Position sign so it is fully visible and readable to general public.

C. Erect sign level and plumb.

D. If mounted on posts, sink posts 3 to 4 feet below grade and stabilize posts to minimize lateral motion. Leave a minimum of 8 feet of post above existing grade for mounting of sign.

E. Erect sign so that top edge of sign is at a nominal 8 feet above existing grade.

3.02 MAINTENANCE AND REMOVAL

A. Keep signs and supports clean. Repair deterioration and damage.

B. Remove signs, framing, supports, and foundations to a depth of at least 2 feet upon completion of Project. Restore area to a condition equal to or better than before construction.

END OF SECTION

| PROJECT No.:<br>(FILE NO: ) | CONTRACT No.: | REVIEWED BY: |
|---|---|---|

| *INSTRUCTIONS TO SIGN MAKER (LIST COMPANY NAME): | | |
|---|---|---|
| QTY. | ACTION ITEMS: | |
| | Make new sign(s) | |
| | Follow City standards attached | |
| | Provide submittal (drawing) to the City for project sign showing content, layout, lettering style, lettering size, and colors | |
| VARIABLE TEXT | | |
| Line 1 | Project Name: | |
| Line 2 | Project Amount (rounded to nearest $1000): | |
| ATTACHMENTS INCLUDED | | |
| QTY. | SEALS / LOGOS | |
| | City of Houston - 24" diameter | |
| | STANDARDS | |
| | Standard Specification Section 01580 - Project Identification Signs | |
| | Standard Detail<br>01580-02 Construction Sign | |

*(Instructions on reverse.)*

## INSTRUCTIONS

Contractor produces this form. Contractor shall insert the information and provide the form to the sign maker with Contractor's purchase order.

List PROJECT No., (FILE No.), CONTRACT No., and name of City's Project Manager REVIEWED BY.

**INSTRUCTIONS TO SIGN MAKER:**

- Give COMPANY NAME of sign maker.
- Indicate QUANTITY of new signs to be made.
- Direction for sign maker to follow City Standards in making signs.
- Require submittals from sign maker, who provides Shop Drawing of Project sign showing content, layout, lettering style, lettering size, and colors.

**VARIABLE TEXT:**

- Give PROJECT NAME. Write it out in all caps and suggest line break. Lines are required.
- Give Project amount to be listed on sign. Round off to nearest $1000.

**ATTACHMENTS INCLUDED:**

- **Seals**

  City provides the quantity of City seals required, one for each Project sign.

- **Standards**

  Contractor provides set of Standards to sign maker, including (Specification Section 01580 - Project Identification Signs, and Standard Detail No. 01580-02 - Construction Sign.

Section 01581

# EXCAVATION IN PUBLIC WAY PERMIT SIGNS

## PART 1 G E N E R A L

### 1.01 SECTION INCLUDES

A. Project sign installation.

B. Maintenance and removal of Project sign.

### 1.02 SYSTEM DESCRIPTION

A. Sign Construction: Construct signs of new materials.

B. Appearance: Maintain signs to present a clean and neat look throughout the Contract duration.

C. Sign Placement: Place signs at each street entrance to street cut excavation.

### 1.03 SUBMITTALS

A. Submit Shop Drawings under provisions of Section 01330 - Submittal Procedures.

B. Show content, layout, lettering style, lettering size and colors. Make sign and lettering to scale, clearly indicating condensed lettering, if used.

## PART 2 P R O D U C T S

### 2.01 SIGN LAYOUT

A. Conform to Texas Manual on Uniform Traffic Control Devices. Minimum size: 36 inches by 36 inches.

B. Lettering: Uppercase Helvetica Regular lettering.

C. Composition: Include on sign copy of street cut permit, title "City of Houston", contracting department's name, address, and emergency telephone number and Contractor's name. Project Manager will provide department name, address, and emergency telephone number for preparation of sign.

## PART 3 EXECUTION

### 3.01 INSTALLATION

A. Install Project signs before commencement of pavement excavation in Public Way.

B. Position sign so it is fully visible and readable to general public.

C. Erect sign level and plumb.

D. Erect sign so that top edge of sign is at a nominal 8 feet above existing grade.

### 3.02 MAINTENANCE AND REMOVAL

A. Keep signs and supports clean. Repair deterioration and damage.

B. Remove signs, framing, supports and foundations to depth of at least 2 feet upon completion of the Work. Restore area to condition equal to or better than before construction.

END OF SECTION

Section 01610

# BASIC PRODUCT REQUIREMENTS

## PART 1 GENERAL

### 1.01 SECTION INCLUDES

A. Requirements for transportation, delivery, handling, and storage of Products.

### 1.02 PRODUCTS

A. Products: Defined in Document 00700 – General Conditions. Does not include machinery and equipment used for preparation, fabrication, conveying and erection of the Work. Products may also include existing materials or components designated for reuse.

B. For material and equipment specifically indicated or specified to be reused in the work:

1. Use special care in removal, handling, storage and reinstallation, to assure proper function in completed work.

2. Arrange for transportation, storage and handling of products which require off-site storage, restoration or renovation. Include cost in unit price for related items.

C. When contract documents require that installation of work comply with manufacturer's printed Instructions, obtain and distribute copies of such instructions to parties involved in installation, including two copies to Project Manager. Maintain one set of complete instructions at job site during installation until completion.

D. Provide Products from the fewest number of manufacturers as practical, in order to simplify spare parts inventory and to allow for maximum interchangeability of components. For multiple components of the same size, type or application, use the same make and model of component throughout the Work.

### 1.03 TRANSPORTATION

A. Make arrangements for transportation, delivery, and handling of Products required for timely completion of the Work.

B. Transport and handle Products in accordance with manufacturer's instructions.

C. Consign and address shipping documents to proper party giving name of the Project and its complete street address. Shipments shall be delivered to

Contractor.

1.04 DELIVERY

A. Arrange deliveries of Products to accommodate short-term site completion schedules and in ample time to facilitate inspection prior to Installation. Avoid deliveries that cause lengthy storage or overburden of limit storage space.

B. Coordinate deliveries to avoid conflict with the Work and conditions at the site and to accommodate the following:

1. Work of other contractors or the City.

2. Limitations of storage space.

3. Availability of equipment and personnel for handling Products.

4. The City's use of premises.

C. Have Products delivered to the site in manufacturer's original, unopened, labeled containers.

D. Immediately upon delivery, inspect shipment to assure:

1. Product complies with requirements of the Contract.

2. Quantities are correct.

3. Containers and packages are intact; labels are legible.

4. Products are properly protected and undamaged.

1.05 PRODUCT HANDLING

A. Coordinate off-loading of Products delivered to the site. If necessary during construction, move and relocate stored Products at no additional cost to the City.

B. Provide equipment and personnel necessary to handle Products, including those provided by the City, by methods to prevent damage to Products or packaging.

C. Provide additional protection during handling as necessary to prevent breaking, scraping, marring, or otherwise damaging Products or surrounding areas.

D. Handle Products by methods to prevent over-bending or overstressing.

E. Lift heavy components only at designated lifting points.

F. Handle Products in accordance with manufacturer's recommendations.

G. Do not drop, roll, or skid Products off delivery vehicles. Hand-carry or use Suitable materials handling equipment.

1.06 STORAGAE OF PRODUCTS

A. Store and protect Products in accordance with manufacturer's recommendations and requirements of these Specifications.

B. Make necessary provisions for safe storage of Products. Place Products so as to prevent damage to any part of the Work or existing facilities and to maintain free access at all times to all parts of the Work and to utility service company installations in the vicinity of the Work. Keep Products neatly and compactly stored in locations that will cause minimum inconvenience to other contractors, public travel, adjoining owners, tenants, and occupants. Arrange storage in a manner so as to provide easy access for inspection.

C. Restrict storage to areas available on the site for storage of Products as shown on Drawings or approved by Project Manager.

D. Provide off-site storage and protection when on-site storage is not adequate. Provide addresses of, and access to, off-site storage locations for inspection by Project Manager.

E. Do not use lawns, grass plots, or other private property for storage purposes without written permission of owner or other person in possession or control of premises.

F. Protect stored Products against loss or damage.

G. Store in manufacturers' unopened containers.

H. Neatly, safely, and compactly stack Products delivered and stored along the line of the Work to avoid inconvenience and damage to property owners and general public, and maintain at least 3 feet clearance around fire hydrants. Keep public, private driveways and street crossings open.

I. Repair or replace damaged lawns, sidewalks, streets or other improvements to satisfaction of Project Manager. Total length that Products may be distributed along route of construction at one time is 1000 linear feet, unless otherwise approved in writing by Project Manager.

PART 2 P R O D U C T S - Not Used

PART 3 E X E C U T I O N - Not Used

END OF SECTION

Section 01630

# PRODUCT SUBSTITUTION PROCEDURES

## PART 1 GENERAL

### 1.01 SECTION INCLUDES

A. Options for making Product or process selections.

B. Procedures for proposing equivalent Products or processes, including pre-approved, pre-qualified, and approved Products or processes.

### 1.02 DEFINITIONS

A. Product: As defined in Document 00700 – General Conditions. Product does not include machinery and equipment used for production, fabrication, conveying, and erection of the Work. Products may also include existing materials or components designated for reuse.

B. Process: Any proprietary system or method for installing system components resulting in an integral, functioning part of the Work. For this Section, the word Products includes Processes.

### 1.03 SELECTION OPTIONS

A. Pre-approved Products: Construction products of certain manufacturers or Suppliers designated in Specifications as "pre-approved." The City maintains a list of pre-approved products. Pre-approved Products for this Project are designated as pre-approved in Specifications. Products of other manufacturers or suppliers are not acceptable for this Project and will not be considered under the submittal process for approving alternate products.

B. Pre-qualified Products: Construction products of certain manufacturers or Suppliers designated in Specifications as "pre-qualified." Pre-qualified Products for this Project are designated as pre-qualified in Specifications. Products of other manufacturers or suppliers are not acceptable for this Project and will not be considered under the submittal process for approving alternate products.

C. Approved Products: Construction products of certain manufacturers or Suppliers designated in Specifications followed by words "or approved equal." Approval of alternate products not listed in Specifications may be obtained through provisions for product options and substitutions in Document 00700 - General Conditions, and by following submittal procedures specified in

Section 01330- Submittal Procedures. The procedure for approval of alternate products is not applicable to pre-approved or pre-qualified products.

D. Product Compatibility: To the maximum extent possible, provide Products that are of the same type or function from a single manufacturer, make, or source. Where more than one choice is available, select Product that is compatible with other Products already selected, specified, or in use by the City.

1.04 CONTRACTOR'S RESPONSIBILITY

A. Responsibility related to Product options and substitutions is defined in Document 00700 - General Conditions.

B. Furnish information Project Manager deems necessary to judge equivalency of alternate Product.

C. Pay for laboratory testing, as well as any other review or examination costs, needed to establish equivalency between products in order to obtain information upon which Project Manager can base a decision.

D. If Project Manager determines alternate product is not equal to that named in Specifications, Furnish one of the specified Products.

1.05 CITY REVIEW

A. Use alternate Products only when approved in writing by Project Manager. Project Manager's determination regarding acceptance of proposed alternate Product is final.

B. Alternate Products shall be accepted if Products are judged by Project Manager to be equivalent to specified Product or to offer substantial benefit to the City.

C. The City retains the right to accept any Product deemed advantageous to the City, and similarly, to reject any product deemed not beneficial to City.

1.06 SUBSTITUTION PROCEDURE

A. Collect and assemble technical information applicable to the proposed Product to aid in determining equivalency as related to the approved Product specified.

B. Submit a written request for a construction Product to be considered as an alternate Product.

C. Submit Product information after the effective date of the Contract and within the time period allowed for substitution submittals given in Document 00700 - General Conditions. After the submittal period has expired, requests for alternate Products shall be considered only when specified Product becomes unavailable because of conditions beyond Contractor's control.

D. Submit five copies of each request for alternate Product approval. Include the following information:

1. Complete data substantiating compliance of proposed substitution with the Contract.

2. For Products:
   a. Product identification, including manufacturer's name and address.
   b. Manufacturer's literature with Product description, performance and test data, and reference standards.
   c. Samples, as applicable.
   d. Name and address of similar projects on which Product was used and date of installation. Include names of Owner, design consultant, and installing contractor.

3. For construction methods:
   a. Detailed description of proposed method.
   b. Drawings illustrating methods.

4. Itemized comparison of proposed substitution with Product or method specified.

5. Data relating to changes in Construction Schedule.

6. Relation to separate contracts, if any.

7. Accurate cost data on proposed substitution in comparison with Product or method specified.

8. Other information requested by Project Manager.

E. Approved alternate Products will be subject to the same review process as the specified Product would have been for Shop Drawings, Product Data, and Samples.

PART 2 P R O D U C T S - Not Used

PART 3 E X E C U T I O N - Not Used

END OF SECTION

Section 01725

# FIELD SURVEYING

## PART 1 GENERAL

### 1.01 QUALITY CONTROL

A. Conform to State of Texas laws for surveys requiring licensed surveyors. Employ a surveyor acceptable to Project Manager if required by the Contract.

### 1.02 MEASUREMENT AND PAYMENT

A. UNIT PRICES

1. No separate payment will be made for field surveying. Include cost in unit price for related items.

### 1.03 SUBMITTALS

A. Conform to requirements of Section 01330 - Submittal Procedures.

B. Submit name, address, and telephone number of Surveyor to Project Manager before starting survey work.

C. Submit documentation verifying accuracy of survey work on request.

D. Submit certificate signed by Surveyor, that elevations and locations of the Work are in conformance with the Contract.

### 1.04 PROJECT RECORD DOCUMENTS

A. Maintain a complete and accurate log of control and survey work as it progresses.

B. Prepare a certified survey setting forth dimensions, locations, angles, and elevations of construction and site work upon completion of foundation walls and major site improvements.

C. Submit record documents under provisions of Section 01785 - Project Record Documents.

### 1.05 EXAMINATION

A. Verify locations of survey control points prior to starting the Work.

B. Notify Project Manager immediately if any discrepancies are discovered.

1.06 SURVEY REFERENCE POINTS

A. The City will establish survey control datum as provided in Document 00700 - General Conditions and as indicated on Drawings. Inform Project Manager in Advance of time horizontal and vertical control points will be established so

verification deemed necessary by Project Manager may be done with minimum inconvenience to the City or Contractor.

B. Locate and protect survey control points prior to starting site work; preserve permanent reference points during construction.

C. Notify Project Manager a minimum of 48 hours before relocation of reference points is needed due to changes in grades or other reasons.

D. Promptly report loss or destruction of reference points to Project Manager.

E. Reimburse the City for cost of reestablishment of permanent reference points disturbed by construction operations.

1.07 SURVEY REQUIREMENTS

A. Utilize recognized engineering survey practices.

B. Establish a minimum of two permanent benchmarks on site, referenced to established control points. Record horizontal and vertical location data on Project record documents.

C. Establish elevations, lines and levels to provide quantities required for measurement and payment and for appropriate controls for the Work. Locate and lay out the following with appropriate instruments:

1. Site improvements including grading, fill and topsoil placement, utilities, and footings and slabs

2. Grid or axis for structures

3. Building foundation, column locations, and ground floor elevations

D. Periodically verify layouts.

PART 2 P R O D U C T S - Not Used

PART 3 E X E C U T I O N - Not Used

END OF SECTION

Section 01731

# CUTTING AND PATCHING

## PART 1 GENERAL

### 1.01 SECTION INCLUDES

A. Cutting, patching and fitting of the Work or work under construction. Coordinating Installation or connection of the Work to existing facilities, or uncovering work for access, inspection or testing and related submittals.

### 1.02 MEASUREMENT AND PAYMENT

A. UNIT PRICES

1. No separate payment will be made for cutting and patching. Include cost in unit price for related items.

### 1.03 CUTTING AND PATCHING

A. Perform activities to avoid interference with facility operations and work of others in accordance with Document 00700 - General Conditions of Contract.

B. Execute cutting and patching, including excavation, backfill and fitting to:

1. Remove and replace defective work or work not conforming to Drawings and Specifications;

2. Take samples of installed work as required for testing;

3. Remove construction required to provide for specified alterations or additions to existing work;

4. Uncover work to allow inspection or reinspection by Project Manager or regulatory agencies having jurisdiction;

5. Connect uninstalled work to completed work in proper sequence;

6. Remove or relocate existing utilities and pipes that obstruct work;

7. Make connections or alterations to existing or new facilities;

8. Provide openings, channels, chases and flues and cut, patch, and finish; if required; or

9. Provide protection for other portions of the Work.

C. Restore existing work to a condition equal to or better than that which existed Prior to cutting and patching, and to standards required by Specifications.

D. Support, anchor, attach, match, trim and seal materials to work of others. Unless otherwise specified, Furnish and Install sleeves, inserts, and hangers required for execution of the Work.

E. Provide shoring, bracing and support necessary to maintain structural integrity and to protect adjacent work from damage during cutting and patching. Request written approval from Project Manager, before cutting structural members such as beams, anchors, lintels, or other supports. Follow approved submittals, as applicable.

F. Match new materials to existing materials by bonding, lapping, mechanically tying, anchoring or other effective means in order to prevent cracks and to minimize evidence of patching. Conceal effects of demolition and patching by blending new construction to existing surfaces. Avoid obvious breaks, joints or changes of surface appearance unless shown on Drawings or authorized by Project Manager.

1.04 SUBMITTALS

A. Conform to requirements of Section 01330 - Submittal Procedures.

B. Submit a written request to Project Manager for consent to proceed, before conducting cutting operations that might affect structural integrity, design function, City operations, or work of another contractor.

C. Include the following in submittal:

1. Identification of Project

2. Description of affected work

3. Necessity for cutting

4. Effect on other work and on structural integrity

5. Describe the proposed work including:
   a. Scope of cutting and patching
   b. Contractor, Subcontractor or Supplier who will execute the work
   c. Proposed Products
   d. Extent of refinishing
   e. Schedule of operations

6. Alternatives to cutting and patching

D. When work conditions or schedules dictate the need for change of materials or methods, submit a written recommendation to Project Manager that includes:

1. conditions necessitating the change;

2. recommendations for alternative materials or methods; and

3. submittals required for proposed substitutions

E. Notify Project Manager in writing when work will be uncovered for observation. Do not begin cutting or patching operations until authorized by Project Manager.

1.05 CONNECTIONS TO EXISTING FACILITIES

A. Perform construction operations necessary to complete connections and tie-ins to existing facilities. Keep existing facilities in continuous operation unless otherwise permitted in the Specifications or approved in writing by Project Manager.

B. Coordinate interruption of service requiring connection to existing facilities with Project Manager. Do not bypass wastewater or sludge to waterways. Provide temporary pumping facilities to handle wastewater if necessary. Use temporary bulkheads to minimize disruption. Provide temporary power and piping to facilitate construction where necessary.

C. Submit a detailed schedule of proposed connections, including shut-downs and tie-ins. Include proposed time and date as well as anticipated duration of work. Coordinate the connection schedule with the construction schedule.

1. Submit specific times and dates to Project Manager at least 48 hours in advance of proposed work.

D. Procedures and Operations:

1. Operate existing pumps, valves and gates in required sequence under supervision of Project Manager. Do not operate valves, gates or other items of equipment without Project Manager's knowledge.

2. If possible, test equipment under operating conditions before making final tie-ins to connect equipment to existing facility.

3. Coordinate work and schedules. Notify Project Manger at least 48 Hours before shutdowns or bypasses are required.

PART 2 P R O D U C T S Not Used

PART 3 E X E C U T I O N Not Used

END OF SECTION

Section 01732

# PROCEDURE FOR WATER VALVE ASSISTANCE

## PART 1 G E N E R A L

### 1.01 SECTION INCLUDES

A. Operation of valves. City of Houston employees will operate existing valves. Contractor's employees may operate new valves included in the Project prior to acceptance by the City.

### 1.02 PROCEDURE

A. Perform activities listed in Exhibit A attached to this Section.

### 1.03 SUBMITTALS

A. Submit request for work order planning meetings in accordance with Exhibit A. Include information listed in Step 1 of Exhibit A, attached to this Section.

### 1.04 CANCELLATION

A. Contractor, Project Manager, or Public Utilities Division may cancel a scheduled valve assistance appointment at no extra cost or payment to Contractor. Contractor shall notify City's appointed Project Inspector ("Inspector") 24 hours in advance of cancellation. Inspector shall notify Central Operation Service (COS) immediately upon receipt of cancellation notice. Cancellation may be caused by bad weather, preparation work taking longer than anticipated, or unforeseen delays by one or more of the three parties.

## PART 2 P R O D U C T S - Not Used

## PART 3 E X E C U T I O N - Not Used

END OF SECTION

PAGE LEFT INTENTIONALLY BLANK

# EXHIBIT A

## PROCEDURE FOR VALVE ASSISTANCE

The following procedure will be used by Utility Maintenance Branch personnel when completing a service request from individual Contractors, through Inspector, for operation of existing water valves.

### ROUTINE VALVE ASSISTANCE REQUEST (NON-EMERGENCY JOBS):

**Step 1.** a. When notified by Contractor, Inspector will schedule a work order planning meeting by calling Central Operation Service (COS) at **(713) 295-5521** and providing information shown below. The work order planning meeting shall be conducted a minimum of three days after the request; excluding weekends, holidays, inclement weather days, and the day of the call.

| | |
|---|---|
| Location of Work (Street Intersection) | Project # |
| Project Description | Contractor (Company Name) |
| Job Superintendent's Name | Superintendent's Office #/Mobile #/Pager # |
| Contractor's Emergency Information | Name and Phone #/Mobile #/Pager # |
| Inspector/Senior Inspector | Name, Phone #/Mobile #/Pager # |
| Date & Time assistance is requested | |

b. COS will create a work order for each wet connection, cut and plug, etc. that will be designated as a "Code 40" (Private Contractor).

c. COS will give Inspector the work order number. This work order number must be used as a reference in all communications regarding this request for Valve Assistance.

d. Valve personnel must have the work order number on their route sheet. When valve personnel arrive at the job site for the Work Order Planning Meeting between Inspector, Contractor, and Utility Maintenance valve personnel, they will verify the street intersection and work order number with the Inspector before beginning Work Order Planning Meeting.

e. During Work Order Planning Meeting, the work to be performed will be outlined and the actual date work will be performed will be mutually determined by Inspector, Contractor and City's Utility Maintenance Division valve personnel, based upon relevant factors such as preparatory work needed, customer requirements, etc.

f. Valve personnel will perform work specifically outlined in the work order requested. Also, Utility Maintenance Branch valve personnel will only operate existing water valves. Inspector must contact COS and request a new work order for additional work.

g. Valve personnel will contact the dispatcher and advise when the job is complete. Valve personnel will list all appropriate information on the Crew Activity Report.

**Step 2.** Should valve personnel not be able to keep an appointment to provide valve assistance, Utility Maintenance Branch will provide notification to appropriate Inspector by phone at least 24 hours prior, with that fact and rescheduling information, if available.

**Step 3.** Inspector will notify COS if valve personnel have not arrived at the site within 30 minutes of scheduled appointment. If Contractor is not ready when valve operator arrives to provide valve assistance, the City shall charge Contractor $50.00 per hour, starting 15 minutes after the scheduled appointment time, minimum one hour charge.

**Step 4.** Contractor will not be due delay claims or downtime if Utility Maintenance Branch has notified Inspector that they will not be able to provide valve assistance as scheduled.

**Step 5.** Test installed new valves in the presence of Inspector before substantial completion inspection is scheduled. Place new valves in open position on or before the Date of Substantial Completion.

**Step 6.** Project Manager will notify, in writing, Utility Maintenance Branch two months before the warranty expires to report any problems they have with new water lines. Project Manager will notify Contractor about these problems.

## EMERGENCY REQUEST FOR VALVE ASSISTANCE PROCEDURE:

**Step 1.** When notified by Contractor, Inspector will request emergency Valve Assistance due to a broken line/service, etc. by calling COS at **(713) 295-5521** and providing the following information:

| | |
|---|---|
| Location of Work (Street Intersection) | Project # |
| Project Description | Superintendent's Office #/Mobile #/Pager # |
| Contractor (Company Name) | Name and Phone #/Mobile #/Pager # |
| Job Superintendent's Name | Name, Phone #/Mobile #/Pager # |
| Contractor's Emergency Information | |
| Inspector/Senior Inspector | |
| Date & Time assistance is requested | |

**Step 2.** COS will create an emergency work order number and describe the work to be performed.

**Step 3.** COS will give Inspector the emergency work order number. Reference work order number in all communications regarding request for Valve Assistance.

**Step 4.** COS will contact designated valve personnel and assign emergency work order. Dispatcher will follow standard COS procedures if this situation occurs after normal working hours.

**Step 5.** Valve personnel must have the emergency work order number on the route sheet. When valve personnel arrive at the job site for emergency work, they will verify the street intersection and emergency work order number with Inspector prior to beginning work requested for operating existing water valves. Valve personnel will coordinate verification of street intersection and work order number with Inspector prior to performing work.

Section 01740

# SITE RESTORATION

## PART 1 G E N E R A L

### 1.01 SECTION INCLUDES

A. Restoration of site affected by the Work in public or private property, including pavement, esplanades, sidewalks, driveways, fences, lawns and landscaping.

### 1.02 MEASUREMENT AND PAYMENT

A. Unit Prices.

1. Payment for restoration of Project site disturbed by utility construction operations is on a linear foot basis. Measurement will be as provided for corresponding utility in each Specification section. No separate payment made for branch pipe, valves and, other associated work for utilities. Measurement for restoration with multiple utilities within the same right-of-way will be on a linear foot basis for only one utility.

2. No separate payment made for facility or roadway projects. Include cost in the surface improvements associated with the facility or roadway construction.

3. Payment includes required site restoration within the right-of-way or easement regardless of size or type of pipe, method of construction, paved or unpaved areas or thickness and width of pavement.

4. No separate payment made for site restoration for service connections under this Section. Include cost in appropriate utility section.

5. Refer to Section 01270 – Measurement and Payment for Unit Price procedures.

B. Stipulated Price (Lump Sum) Contracts. If Contract is Stipulated Price Contract, include payment for work under this section in total Stipulated Price.

### 1.03 DEFINITIONS

A. Phase: Locations identified on the plans and listed in Section 1110 – Summary of Work under Work Sequence.

B. Site Restoration: Replacement or reconstruction of Site Improvements located in rights-of-way, easements, public property, and private property affected or altered by the Work.

C. Site Improvement: Includes pavement, curbs and gutters, esplanades, sidewalks, driveways, fences, lawns, irrigation systems, landscaping, and other improvements in existence at the Project site before commencement of construction operations.

1.04 SUBMITTALS

A. Conform to requirements of Section 01330 - Submittal Procedures.

B. Schedule of testing, service connections, abandonment, backfill, and site restoration.

C. Sample of notices to residents outlining their responsibility for maintenance of site improvements adjacent to the Project that are not disturbed by construction operations

1.05 SCHEDULING

A. Schedule testing, service connections, abandonment, backfill and site restoration immediately following completion of pipe laying work or paving within each block or line segment.

B. Phased Construction:

1. Commencement of subsequent Phase will follow scheduling of site restoration of prior Phase. Limit work to a maximum of two Phases of the project.

C. Construction of Projects with no Phases listed in Section 01110- Summary of Work:

1. Complete site restoration prior to disturbing over 50% of total project linear feet or 2,000 linear feet, whichever is greater, of right-of-way or easement.

2. Limit work to a maximum of 50% of total project linear feet or 2,000 linear feet, whichever is greater, of right-of-way and easement. Commence work in additional right-of-way or easement after completion of site restoration.

## PART 2 PRODUCTS

### 2.01 MATERIALS

A. Pavement, Sidewalks and Driveways: Materials specified in Section 02951 - Pavement Repair and Resurfacing.

B. Seeding and Sodding: Sod specified in Section 02922 - Sodding and Seed specified in Section 02921 - Hydromulch Seeding.

C. Trees, Shrubs and Plantings: Conform to requirements of Section 01562 – Tree and Plant Protection.

## PART 3 EXECUTION

### 3.01 Preparatory Work

A. Provide cleanup and restoration crews to work closely behind pipe laying and roadway construction crews, and where necessary, during testing, service restoration, abandonment, backfill and surface restoration.

B. Water Lines: Unless otherwise approved by Project Manager, comply with the following:

1. Once Project Manager approves work within a Phase, immediately begin preparatory work for disinfection effort.

2. No later than three days after completing disinfection preparatory work, submit to City appropriate request for disinfection.

3. If City fails to perform initial disinfection of lines in accordance with Section 2514 - Disinfection of Water Lines, within seven days from submission of appropriate request, and if approved by Project Manager, pipe laying operations may continue beyond approved limits until the City responds.

4. Immediately after transfer of services, begin abandonment of old water lines and site restoration.

C. Wastewater Lines:

1. Once Project Manager approves work within a Line Segment, immediately begin preparatory work for testing effort.

2. No later than three days after completing preparatory work for testing, initiate testing work.

3. Immediately after transfer of service connections, begin abandonment of old wastewater lines, and site restoration.

D. Street Construction and Paving Projects

1. Once Project Manager approves work within a Line Segment or block, immediately begin preparatory work for testing effort.

2. No later than three days after completing preparatory work for testing, initiate testing work.

3. Immediately after testing begin site restoration.

E. Street Construction and Paving Projects

1. Once Project Manager approves work within a block, immediately begin preparatory work for sidewalk construction, sodding and hydromulching and tree planting.

2. No later than seven days after completing preparatory work, initiate construction.

3.02 CLEANING

A. Remove debris and trash to maintain a clean and orderly site in accordance with requirements of General Conditions and Section 01576 - Waste Material Disposal.

3.03 LANDSCAPING AND FENCES

A. Seeding and Sodding.

1. Remove construction debris and level area with bank sand so that new grass surface matches level of existing grass and maintains pre-construction drainage patterns. Level and fill minor ruts or depressions caused by construction operations with bank sand, where grass is still viable.

2. Restore previously existing turfed areas with sod and fertilize in accordance with Section 02922 - Sodding. Sod to match existing turf.

3. Restore unpaved areas not requiring sodding with hydromulch seeding conforming to Section 02921 - Hydromulch Seeding.

B. Trees, Shrubbery and Plants.

1. Remove and replant trees, shrubs, and plants in accordance with requirements of Section 01562 – Tree and Plant Protection.

C. Fence Replacement.

1. Replace removed or damaged fencing to equal or better condition than existed prior to construction, including concrete footings and mow strips. Provide new wood posts, top and bottom railing and panels. Metal fencing material, not damaged by the Work, may be reused.

2. Remove and dispose of damaged or substandard material.

3.04 MAINTENANCE

A. Maintain shrubs, plantings, sodded areas and seeded areas.

B. Replace shrubs, plantings and seeded or sodded areas that fail to become established.

C. Refer to Section 01562 - Tree and Plant Protection, Section 02921 - Hydromulch Seeding and Section 02922 - Sodding for maintenance requirements.

END OF SECTION

Section 01755

# STARTING SYSTEMS

## PART 1 G E N E R A L

### 1.01 SECTION INCLUDES

A. Starting systems.

B. Demonstration and instructions.

C. Testing, adjusting and balancing.

## PART 2 P R O D U C T S - Not Used

## PART 3 E X E C U T I O N

### 3.01 PREPARATION

A. Coordinate schedule for start-up of various equipment and systems.

B. Notify Project Manager seven days prior to startup of each item.

C. Verify each piece of equipment or system has been checked for proper lubrication, drive rotation, belt tension, control sequence, or other damage-causing conditions.

D. Verify tests, meter readings, and specified electrical characteristics agree with those required by equipment or system manufacturer.

E. Verify wiring and support components for equipment are complete and tested.

F. Execute start-up under supervision in accordance with manufacturer's instructions.

G. When specified in individual Specification sections, require manufacturer to provide an authorized representative to be present at the site to inspect, check and approve equipment or system installation prior to start-up, and to supervise placing equipment or system in operation.

H. Submit written report indicating that equipment or system has been properly installed and is functioning correctly.

3.02 DEMONSTRATION AND INSTRUCTIONS

A. Demonstrate operation and maintenance of Products to Project Manager two weeks prior to Date of Substantial Completion.

B. Utilize O&M Manuals as the basis for instruction. Review contents of manual with Project Manager in detail to explain aspects of operation and maintenance.

C. Demonstrate start-up, operation, control, adjustment, trouble-shooting, servicing, maintenance, and shutdown of each item of equipment at agreed-upon times, at the equipment location.

D. Prepare and insert additional data in O&M Manuals when the need for additional data becomes apparent during instruction.

E. At a minimum, Contractor will demonstrate the following:

1. Products and procedures to be used in maintaining various surfaces, e.g., counter tops, toilet partitions, tile floors and carpeting;

2. procedures to set and maintain landscape irrigation system;

3. procedures to set and maintain security and fire alarm systems; and

4. procedures to set and maintain HVAC systems.

3.03 TESTING, ADJUSTING AND BALANCING

A. Contractor shall appoint, employ and pay for the services of an independent firm to perform testing, adjusting and balancing.

B. Submit reports by the independent firm to Project Manager describing observations and results of tests and signifying compliance or non-compliance with specified requirements and requirements of the Contract.

END OF SECTION

Section 01770

# CLOSEOUT PROCEDURES

## PART 1 GENERAL

### 1.01 SECTION INCLUDES

A. Procedures to establish Date of Substantial Completion.

B. Closeout procedures for final submittals, O&M data, warranties, spare parts and maintenance materials.

C. Texas Department of Licensing and Regulation (TDLR) inspection for Texas Accessibility Standards (TAS) compliance.

### 1.02 SUBSTANTIAL COMPLETION

A. Comply with Document 00700 - General Conditions regarding Date of Substantial Completion when Contractor considers the Work, or portion thereof designated by Project Manager, to be substantially complete.

B. Insure the following items have been completed when included in the Work, prior to presenting a list of items to be inspected by Project Manager for issuance of a Certificate of Substantial Completion:

1. cutting, plugging, and abandoning of water, wastewater, and storm sewer lines, as required by Contract documents for each item;

2. construction of, and repairs to, pavement, driveways, sidewalks, and curbs and gutters;

3. sodding and hydromulch seeding, unless waived by Project Manager in writing;

4. general clean up including pavement markings, transfer of services, successful testing and landscape;

5. additional requirements contained in Section 01110 - Summary of Work.

C. Assist Project Manager with inspection of Contractor's list of items and complete or correct the items, including items added by Project Manager, within specified time period.

D. Should Project Manager's inspection show failure of Contractor to comply with requirements to obtain Date of Substantial Completion, including those items in Paragraph 1.02 B. of this section, Contractor shall complete or correct the items, before requesting another inspection by Project Manager.

1.03 CLOSEOUT PROCEDURES

A. Comply with Document 00700 - General Conditions regarding final completion and final payment when the Work is complete and ready for Project Manager's final inspection.

B. Provide Project Record Documents in accordance with Section 01785 - Project Record Documents.

C. Complete or correct items on punch list, with no new items added. Address new items during warranty period.

D. The City will occupy portions of the Work as specified in other sections.

1.04 FINAL CLEANING

A. Execute final cleaning prior to final inspection.

B. For facilities, clean interior and exterior glass and surfaces exposed to view; remove temporary labels, stains and foreign substances, polish transparent and glossy surfaces, vacuum carpeted and soft surfaces.

C. Clean equipment and fixtures to sanitary condition.

D. Clean or replace filters of operating equipment.

E. Clean debris from roofs, gutters, down spouts, and drainage systems.

F. Clean site; sweep paved areas, and rake clean landscaped surfaces.

G. Remove waste and surplus materials, rubbish, and temporary construction facilities from site following final test of utilities and completion of the Work.

1.05 ADJUSTING

A. Adjust operating equipment to ensure smooth and unhindered operation. Value of this testing and adjusting is five percent of Lump Sum Price in the Schedule of Values for item being tested.

1.06 OPERATION AND MAINTENANCE DATA

A. Submit O&M data as noted in Section 01330 - Submittal Procedures.

B. Five percent of lump sum amount of each piece of equipment as indicated in Schedule of Unit Price Work or Schedule of Values will be paid after the required O&M data submittals are received and approved by Project Manager.

1.07 WARRANTIES

A. Provide one original of each warranty from Subcontractors, Suppliers, and manufacturers.

B. Provide Table of Contents and assemble warranties in a 3-ring/D binder with durable plastic cover.

C. Submit warranties prior to final progress payment.

D. Warranties shall commence in accordance with the requirements in Document 00700 - General Conditions.

1.08 SPARE PARTS AND MAINTENANCE MATERIALS

A. Provide Products, spare parts, maintenance and extra materials in quantities specified in individual Specification sections.

B. Deliver to a location within the City limits as directed by Project Manager. Applicable items must be delivered prior to issuance of a final Certificate for Payment.

PART 2 P R O D U C T S - Not Used

PART 3 E X E C U T I O N - Not Used

END OF SECTION

Section 01782

# OPERATIONS AND MAINTENANCE DATA

## PART 1 GENERAL

### 1.01 SECTION INCLUDES

A. Submittal requirements for equipment and facility Operations and Maintenance (O&M) Manuals

### 1.02 MEASUREMENT AND PAYMENT

A. Measurement for equipment O&M Manuals is on a lump sum basis equal to five percent of the individual equipment value contained in Schedule of Unit Prices or Schedule of Values. The lump sum amount may be included in the first Progress Payment following approval of the O&M Manuals by Project Manager.

### 1.03 SUBMITTALS

A. Conform to requirements of Section 01330 - Submittal Procedures. Submit a list of O&M Manuals and parts manuals for equipment to be incorporated into the Work.

B. Submit documents with 8-1/2 x 11-inch text pages, bound in 3-ring/D binders with durable plastic covers.

C. Print "OPERATION AND MAINTENANCE INSTRUCTIONS", Project name, and subject matter of binder on covers when multiple binders are required.

D. Subdivide contents with permanent page dividers, logically organized according to the Table of Contents, with tab titling clearly printed under reinforced laminated plastic tabs.

E. O&M Manual contents: Prepare a Table of Contents for each volume, with each Product or system description identified.

1. Part 1 - Directory: Listing of names, addresses, and telephone numbers of Design Consultant, Contractor, Subcontractors, and major equipment Suppliers.

2. Part 2 - O&M instructions arranged by system. For each category, identify names, addresses, and telephone numbers of Subcontractors and Suppliers and include the following:
   a. Significant design criteria.
   b. List of equipment.
   c. Parts list for each component.
   d. Operating instructions.
   e. Maintenance instructions for equipment and systems.
   f. Maintenance instructions for special finishes, including recommended cleaning methods and materials and special precautions identifying detrimental agents.

3. Part 3 - Project documents and certificates including:
   a. Shop Drawings and relevant data.
   b. Air and water balance reports.
   c. Certificates.
   d. Photocopies of warranties.

F. Submit two copies of O&M Manuals and parts manuals, for review, within one month prior to placing the equipment or facility in service.

G. Submit one copy of completed volumes in final form 10 days prior to final inspection. One copy with Project Manager comments will be returned after final inspection. Revise content of documents based on Project Manager's comments prior to final submittal.

H. Revise and resubmit three final volumes within 10 days after final inspection.

1.04 EQUIPMENT O&M DATA

A. Furnish O&M Manuals, prepared by manufacturers for all equipment. Manuals must contain, as a minimum, the following:

1. Equipment functions, normal operating characteristics, and limiting conditions.

2. Assembly, Installation, alignment, adjustment, and checking instructions.

3. Operating instructions for start-up, normal operation, regulation and control, normal shutdown, and emergency shutdown.

4. Detailed drawings showing the location of each maintainable part and lubrication point with detailed instructions on disassembly and reassembly of the equipment.

5. Troubleshooting guide.

6. Spare parts list, predicted life of parts subject to wear, lists of spare parts recommended to be on hand for both initial start-up and for normal operating inventory, and local or nearest source of spare parts availability.

7. Outline, cross-section, and assembly drawings with engineering data and wiring diagrams.

8. Test data and performance curves.

B. Furnish parts manuals for all equipment, prepared by the equipment manufacturer, which contain, as a minimum, the following:

1. Detailed drawings giving the location of each maintainable part.

2. Spare parts list with predicted life of parts subject to wear, lists of spare parts recommended on hand for both initial start-up and for normal operating inventory, and local or nearest source of spare parts availability.

PART 2 P R O D U C T S - Not Used

PART 3 E X E C U T I O N - Not Used

END OF SECTION

Section 01785

# PROJECT RECORD DOCUMENTS

## PART 1 GENERAL

### 1.01 SECTION INCLUDES

A. Maintenance and submittal of record documents and Samples.

### 1.02 MAINTENANCE OF DOCUMENTS AND SAMPLES

A. Maintain one record copy of documents at the site in accordance with Document 00700 - General Conditions.

B. Store record documents and Samples in field office, if a field office is required by the Contract, or in a secure location. Provide files, racks, and secure storage for record documents and Samples.

C. Label each document "PROJECT RECORD" in neat, large, printed letters.

D. Maintain record documents in a clean, dry, and legible condition. Do not use record documents for construction purposes. Do not use permit drawings to record Modifications to the Work.

E. Keep record documents and Samples available for inspection by Project Manager.

F. Bring record documents to progress review meetings for viewing by Project Manager and, if applicable, Design Consultant.

### 1.03 RECORDING

A. Record information legibly with red ink pen on a set of blueline opaque drawings, concurrently with construction progress. Maintain an instrument on site at all times for measuring elevations accurately. Do not conceal work until required information is recorded

B. Contract Drawings and Shop Drawings: Mark each item to record completed Modifications, or when minor deviations exist, the actual construction including:

1. Measured depths of elements of foundation in relation to finish first floor datum.
2. Measured horizontal locations and elevations of Underground Facilities and appurtenances, referenced to permanent surface improvements.

3. Elevations of Underground Facilities referenced to City of Houston benchmark utilized for the Work.

4. Measured locations of internal utilities and appurtenances concealed in construction, referenced to visible and accessible features of the Work.

5. Dimensions and details of field changes

6. Changes made by Modifications.

7. Details not on original Drawings.

8. References to related Shop Drawings and Modifications.

C. Survey all joints of water mains at the time of construction. Record on Drawings, water main invert elevation, elevation top of manway, and centerline horizontal location relative to baseline.

D. For large diameter water mains, mark specifications and addenda to record:

1. Manufacturer, trade name, catalog number and Supplier of each Product actually Installed.

2. Changes made by Modification or field order.

3. Other matters not originally specified.

E. Annotate Shop Drawings to record changes made after review.

1.04 SUBMITTALS

A. At closeout of the Contract, deliver Project record documents to Project Manager.

PART 2 P R O D U C T S - Not Used

PART 3 E X E C U T I O N - Not Used

END OF SECTION

Section 02105

# CHEMICAL SAMPLING AND ANALYSIS

## PART 1 GENERAL

### 1.01 SECTION INCLUDES

A. Preparatory work related to site remediation and excavation in a Potentially Petroleum Contaminated Area (PPCA).

B. Sampling and analysis of site material.

### 1.02 MEASUREMENT AND PAYMENT

A. Unit Prices

1. Preparatory work is paid on a lump sum basis. Item includes hiring environmental consultants, preparing Environmental Health and Safety Plan, preparing Environmental Work Plan, training personnel, and obtaining permits and additional insurance.

2. Underground Utility Construction in PPCA.

a. Underground utility construction and appurtenances in areas identified within PPCA limits is on a linear foot basis, each basis, or lump sum basis, as shown in Document 00410 – Bid Form.

b. Payment includes compensation for labor, equipment, and supervision for mobilization, environmental monitoring and field screening, handling, sampling, and testing of contaminated soil and groundwater. Contaminated soil may be Category I or II. Contaminated groundwater will be that encountered during excavation for underground utilities and flowing at a rate not greater than 20 gallons per minute. Included in this pay item is incremental cost for upgraded piping, gaskets, and appurtenant materials.

c. Limits of measurement under this section are noted on Drawings as 'Begin PPCA Excavation' and 'End PPCA Excavation' and other areas determined by Project Manager during the course of the work.

d. Payment will be made upon receipt of field test reports from approved analytical laboratory.

3. A force account for Extra Work for PPCA Handling will be used to compensate for time and materials required for additional work associated with PPCA when directed by Project Manager to perform such work and for which there is no bid item. Authorization and compensation for this work will be in accordance with Document 00700 - General Conditions.

4. Refer to Section 01270 - Measurement and Payment for unit price procedures.

B. Stipulated Price (Lump Sum). If the Contract is a Stipulated Price Contract, payment for work in this Section is included in the total Stipulated Price.

1.03 REFERENCE STANDARDS

A. ASTM D 5092 - Practice for Design and Installation of Groundwater Monitoring Wells.

B. Code of Federal Regulation (CFR), Title 40, Section 261.24. - Protection of the Environment.

C. CFR, Title 29, Section 1910.120. - Occupational Safety and Health Administration, Department of Labor.

D. CFR, Title 29, Section 1926. - Occupational Safety and Health Administration, Department of Labor.

E. CFR, Title 40, Section 261, Appendix II. - Protection of the Environment.

F. Texas Administrative Code (TAC), Title 30, Chapter 335. - Industrial Solid Waste and Municipal Hazardous Waste.

G. TAC, Title 30, Chapter 334. - Underground and Aboveground Storage Tanks.

H. TAC, Title 30, Chapter 106.533. - Exemptions from Permitting, Subchapter X. Waste Processes and Remediation.

I. U.S. Environmental Protection Agency (EPA), (SW-846) Test Methods for Evaluating Solid Waste, Office of Solid Waste and Emergency Response, Washington, D.C. (P1388-239223, November 1986).

J. Texas Commission on Environmental Quality (TCEQ) Interoffice Memo, dated 4/12/94, by Chris Chandler, RPR Section, PST Division, regarding

'Revised Procedures for Classifying and Assigning Waste Codes for Underground and Aboveground Petroleum Storage Tank Wastes' (text attached following this section).

1.04 DEFINITIONS

A. Petroleum: Crude oil, natural gas, natural gas liquids, liquefied natural gas, and synthetic gas usable for fuel, as well as distillates of crude oil including gasoline, kerosene, diesel oil, motor oil, waste oil, jet fuels, and fuel oil.

B. Potentially Petroleum Contaminated Area (PPCA): An area within station-to-station locations identified on Drawings where petroleum contamination has been detected in the soil or groundwater. PPCA also includes areas where contamination is suspected or encountered during utility installation outside areas identified on Drawings, and such contamination has been verified by Project Manager.

C. Category I Soil: Soil containing visual or physical evidence of contamination, as described in paragraph 3.01, and that is not Category II Soil.

D. Category II Soil: Soil that contains petroleum contamination in excess of levels identified in paragraph 3.04, and is consistent with a classification as Special Waste-PST as defined by TCEQ in their interoffice memo dated 4/12/94, or soil that contains visible free product or is impacted with non-petroleum compounds detected above Risk Reduction Standard Number 2 levels as defined in Texas Administrative Code, Title 30, Chapter 335.

E. Potentially Contaminated Groundwater: Water recovered in a groundwater control system located in PPCA or groundwater that contains visual or physical evidence of contamination, as described in paragraph 3.01, and such contamination has been verified by Project Manager.

1.05 SUBMITTALS

A. Conform to requirements of Section 01330 - Submittal Procedures.

B. Submit an Environmental Work Plan within 30 days after issuance of Notice to Proceed.

1. The Environmental Work Plan shall be prepared by a Corrective Action Project Manager licensed in Texas, who has completed 40-hours of Health and Safety Training and the required annual refresher training, and in the employment of a registered Corrective Action Specialist firm.

2. The Environmental Work Plan shall include the following items. Compile and arrange in a format that can be reviewed by TCEQ.

   a. Proposed sequence of construction through PPCA;

   b. Procedures for screening soil in PPCA, identifying Category I or II Soil;

   c. Procedures for handling material from PPCA;

   d. Proposed location of stockpile areas;

   e. Proposed reuse of Category I Soil as trench backfill below depths of 30 inches;

   f. Proposed methods for disposal or recycling of Category I or II Soil;

   g. Proposed carriers of Category I or II Soil or potentially contaminated groundwater with verification each is properly licensed;

   h. Proposed recycle/disposal sites for Category I or II Soil or potentially contaminated groundwater with verification that each is properly licensed;

   i. Copy of permit required for discharge of potentially contaminated groundwater in sanitary sewer system, if to be disposed in sanitary sewer;

   j. Name and qualifications of Corrective Action Project Manager and professional environmental consultants for health, environmental, and safety issues regarding operations within PPCA; and,

   k. Proposed analytical laboratory with verification it is accredited by A2LA or other recognized association, or it is a participant in the EPAs Performance Evaluation Program.

3. Do not commence work in PPCA until Environmental Work Plan has been reviewed and accepted by Project Manager.

C. Submit Environmental Health and Safety Plan within 30 days after issuance of Notice to Proceed.

1. The Health and Safety Plan shall be prepared by a Corrective Action Project Manager licensed in Texas, who has completed 40 hours of health and safety training, and required annual refresher training, or a Certified Industrial Hygienist.

2. Include methods and procedures for assuring work, which will be conducted under conditions expected in the field, is safe.

D. As work proceeds, submit field screening, monitoring and analytical laboratory test results on a weekly basis for soil and on a daily basis for groundwater. Summarize test results in tables together with applicable regulatory criteria.

E. Submit copies of correspondence, reports, permits and other documents provided to, or received from, regulatory agencies.

1.06 PERSONNEL REQUIREMENTS

A. Provide trained personnel who have completed minimum health and safety programs specified by the Occupational Safety and Health Administration in 29 CFR 1910.120. Before beginning work at the site, each employee that will work in PPCA is required to have completed 40 hours health and safety training and the required annual refresher training.

PART 2 P R O D U C T S

2.01 MATERIALS

A. Do not use polyvinyl chloride or other plastic material, unless approved by Project Manager.

B. Water Line Pipe Material.

1. Furnish ductile-iron pipe or steel pipe material within station-to-station locations identified as PPCA on Drawings.

2. Provide restrained joints for ductile-iron pipe or welded joints for steel pipe.

3. Provide pipe material conforming to Section 02501 – Ductile Iron Pipe and Fittings or Section 02502 - Steel Pipe and Fittings.

C. Sanitary Sewer Pipe Material.

1. Furnish ductile iron pipe, fiberglass reinforced pipe, or equivalent protective materials approved by Project Manager.

2. Provide restrained joints.

3. Provide pipe material conforming to Section 02501 – Ductile Iron Pipe and Fittings or Section 02504 - Fiberglass Reinforced Pipe. Use pipe with a minimum pressure rating of 150 psi.

D. Use Viton (FKM) type gaskets, or approved equal, for water lines and appurtenances requiring gaskets. Use Nitrile Rubber type gaskets, or approved equal, for sanitary and storm sewer pipe, precast concrete manhole joints and appurtenances requiring gaskets

## PART 3 EXECUTION

### 3.01 POTENTIALLY PETROLEUM CONTAMINATED AREAS

A. Conduct operations in PPCA in accordance with the accepted Environmental Work Plan and the Environmental Health and Safety Plan and to minimize the spread of contamination. In other areas which are either detected or suspected to be potentially petroleum contaminated areas, immediately notify Project Manager and proceed with work in accordance with this Section, unless otherwise directed by Project Manager.

B. Immediately notify Project Manager and TCEQ's Region 12 Field Office whenever Category I or II Soil or potentially contaminated groundwater are encountered.

1. Provide location, depth, type (soil or groundwater), source (if known), and evidence of suspected contamination.

2. Determine if Category I Soil or potentially contaminated groundwater is present by visual or physical evidence of contamination. Visual or physical evidence includes:

a. Petroleum or chemical odor.

b. Indication of levels of contamination by air monitoring devices employed as part of the Environmental Health and Safety Plan.

c. Soil or groundwater discoloration.

d. Material oozing/dripping into excavation.

e. Liquid or oily sheen floating on groundwater.

f. Buried containers or refuse.

g. Field screening 'head-space' results in excess of a 25 ppm reading on a photoionization detector (PID) or flame ionization detector (FID).

C. Install piping and gasket materials and appurtenances in conformance with appropriate section, except as modified in this Section.

D. Construct trench dams within a utility trench at each boundary of PPCA and laterals to minimize potential for contaminant transport within pipe bedding material. A trench dam shall consist of at least 24 inches of cement stabilized sand with 10 percent bentonite clay added, extending from 6 inches below bottom of trench to within 12 inches of limits of topsoil or pavement.

## 3.02 ENVIRONMENTAL MONITORING

A. An environmental consultant shall monitor conditions in PPCA, as specified in the Environmental Health and Safety Plan. Maintain safe working conditions in accordance with OSHA requirements (29 CFR 1926).

## 3.03 SCREENING PPCA SOILS

A. An environmental consultant shall perform field screening of soil removed from excavation or tunneling in PPCA.

B. Screening Procedures.

1. Place samples in a sealed plastic bag and place in a warm location for 15 minutes prior to screening.

2. Properly calibrate the PID/FID using a calibration gas. For PID use 100 ppm isobutylene and for FID use 100 ppm methane.

3. Open bag just enough to insert instrument probe and take maximum headspace reading.

4. Screen at least twice per hour while removing soils in open cut areas or shafts.

5. During tunneling, screen once for each pipe length in pipe jacked tunnels or each advance of tunnel shield in primary lined tunnels. Screen at least once per shift when excavating.

## 3.04 SAMPLING AND TESTING

A. Frequency.

1. Sample soil in PPCA at a rate of not less than one composite sample for every 20 cubic yards of excavation or volume corresponding to every 50 linear feet of installed underground utility, whichever is more frequent.

2. Sample water from PPCA to be discharged to a sanitary sewer one week prior to initiation of discharge, and at a rate of one grab sample once per day during discharge to sanitary sewer.

B. Analyze soil samples for parameters listed in Section 02120 – Off-Site Transportation and Disposal, Table 02120-1, Soil Criteria - Petroleum Only, and in accordance with SW-846. Handle as a Category II Soil if analytical results indicate any one, or more, parameters exceed allowable Maximum Concentration listed in Table 02120-1. If benzene concentration from composite sample is greater than 5 milligrams per kilogram (mg/kg) or lead concentration is greater than 30 mg/kg, perform Toxicity Characteristic Leaching Procedure (TCLP) analysis of appropriate compound for that sample to determine if a more stringent disposal classification is warranted. If contaminants other than petroleum are suspected, immediately notify Project Manager who will determine the list of parameters to be analyzed. If such are encountered, compensation will be made under the Allowance for PPCA Handling. Use a 4-part representative composite sample for analysis of parameters, except when inconsistent with SW-846.

C. Analyze groundwater samples for discharge to sanitary sewers. Analyze samples for BTEX by EPA Method 602, 8020, or 8021; TPH by EPA Method 418.1 or Method TX 1005; and Lower Explosive Limit (LEL) in accordance with EPA Method 1010.

D. Conduct analyses by proposed analytical testing laboratory listed in Environmental Work Plan.

## 3.05 AIR MONITORING REQUIREMENTS

A. Ensure health and safety of workers at the construction site. Maintain air quality within the construction zone to conform to exposure limits specified in Code of Federal Regulations (CFR) Title 29, Section 1910.120 enforceable by OSHA.

B. Provide adequate shoring and sufficient escape ladders in accordance with applicable trench safety regulatory requirements.

C. In the trench, continuously operate a combustible gas indicator (CGI) with LEL/$O_2$ meter to monitor vapor and oxygen levels. Properly calibrate CGI and provide an alarm that sounds if greater than or equal to 20 percent Lower Explosive Limit (LEL), less than or equal to 19.5 percent oxygen, or greater than or equal to 25 percent oxygen is reached. Record monitoring data from CGI every 15 minutes to ensure safe work conditions.

D. Take appropriate measures during construction to keep LEL levels below 20 percent in the trench. If vapor concentrations exceed 20 percent of LEL stop construction work, turn off equipment, and have workers immediately vacate the PPCA in an upwind direction.

E. Take readings with PID/FID 50 feet downwind of area during excavation or work in contaminated excavation areas and until one hour after cessation of such work. Take readings within breathing zone at approximately 4 feet above ground level. Record readings, date, time, initials of person taking reading, PID/FID serial number and last calibration date of PID/FID in bound field book.

END OF SECTION

Attachment to Section 02105

PETROLEUM CONTAMINATION

*Following, for informational purposes only, is the text of the 4/12/94 Interoffice Memo from Chris Chandler of the Texas Commission on Environmental Quality (TCEQ), RPR Section, PST Division, regarding Revised Procedures for Classifying and Assigning Waste Codes for Underground and Aboveground Petroleum Storage Tank Wastes:*

This document is a revision of the waste classification memo dated July 18, 1991 which revised the original March 11, 1991 document. The main difference between the first two documents was the elimination of the distinction between industrial and nonindustrial petroleum substance wastes. This latest version has been revised to reflect changes in the rules and in the agency itself. Significant changes are denoted by underlines. Please discard the previous document.

An appropriate response to any leaking petroleum storage tank incident must always include the proper handling and disposal of all generated wastes. In the majority of cases these wastes include contaminated soils and/or wastewater. Before a disposal destination can be determined for a particular waste, the waste must be classified based on the concentrations of contaminants. The procedures for classification of petroleum contaminated wastes are detailed in the attached Guidance Document for the proper Management of Wastes Associated With Underground and Aboveground Petroleum Storage Tanks. The waste first must be analyzed by a laboratory and then, based upon the results of the analysis, a classification can be assigned to the waste with its corresponding waste code number. The waste code is a predesignated number based upon both the waste's classification and the type of contaminants.

Many disposal facilities are now requiring the generator of any petroleum substance waste to obtain a waste classification from TCEQ that assigns a waste code number to that particular waste before the facility will accept it (even though this is not a regulatory requirement for nonhazardous PST wastes). In order to receive this waste code, the generator first must submit laboratory reports and other information providing the results of analysis for the waste. This information should be attached to a completed copy of TCEQ Form No. 0197. Only after receipt of this documentation should the waste code assignment be made. Waste code numbers should never be issued based upon analytical results unsupported by laboratory documentation.

Laboratory reports should include a description of the analytical procedures utilized, the condition in which the sample was received, and the signature of the laboratory personnel. Also, reports must be accompanied by a description of the sample collection and handling procedures. If the procedures described are not in accordance with EPA-approved and/or TCEQ-accepted procedures, the results should be rejected as invalid.

Soil samples should be collected at the rate of one sample for every fifty cubic yards of material, and each sample should be a composite which is representative of the fifty

cubic yard unit. Water samples from inside storage vessels should be collected from the top of the water column in order to identify the highest contaminant level. Water should be sampled at the rate of one sample per 3000 gallons of water, or a minimum of one sample per container if there is more than one container.

When a waste is categorized as Class II PST or Special Waste-PST, the generator must document the volume, means of transportation, and ultimate destination for the waste. Once all of the proper information has been received by the PST of FO Division in writing, the waste classification and code number can be verbally issued to the generator. The number should be written on the submitted Form No. 0197 in the space marked TCEQ Use Only, and a copy of the form mailed or faxed to the Responsible Party (not the contractor or consultant). Also include the date, the person issuing the code number and the Regional Office number on the form. A copy of the completed form and all submitted information should be sent to the Central Office (or regional office as appropriate).

Regional Field Inspectors as well as PST Division Coordinators should issue waste classifications and code numbers for only Class II PST and Special Wastes-PST on cases they are responsible for coordinating.

Additionally, for all waste classification requests which are not associated with LPST sites (such as for disposal of water used to clean tanks or for disposal of soil/backfill material not associated with a confirmed release), the I&HW Division or the appropriate Regional Office should oversee the waste classification. All hazardous and industrial Class I waste must be manifested in accordance with the Industrial Solid Waste Rules, Chapter 335, Texas Administrative Code. Generators of any hazardous wastes or industrial Class I waste should be referred to the Waste Evaluation Section of the TCEQ Industrial and Hazardous Waste Division at (512) 239-6832.

Following are the waste classification and code numbers for typical nonhazardous wastes generated at leaking underground and aboveground petroleum storage tank sites involving the release of petroleum substances only (i.e., gasoline, diesel, kerosene, jet fuel, etc.).

**CONTAMINATED SOILS**

| **Contaminant Level** | **Classification** | **Waste Code Number** |
|---|---|---|
| If greater than 150 ppm BTEX **OR** 600 ppm TPH | Special Waste PST | PSTW4891 |
| If less than 150 ppm BTEX **AND** 600 ppm TPH | Class II PST Waste | PSTW4892 |

***Note*** Soils saturated ('drippy') with gasoline are likely to be ignitable. Contaminated soils analyzed as ignitable are classified as hazardous waste and therefore can only be transported by a registered hazardous waste hauler and only disposed of at a permitted facility authorized to receive hazardous wastes.

**CONTAMINATED WATER**

| **Contaminant Level** | **Classification** | **Waste Code Number** |
|---|---|---|
| Any concentration of dissolved contamination with no phase-separated product | Class II PST Waste | PSTW1021 |

As routinely requested in TCEQ's letters, documentation of the handling and disposition of all wastes generated in a LPST response action must be provided to TCEQ. It is essential that we track PST wastes through signed receipts and, when required, manifests to prevent their illegal dumping.

Should you have any questions or comments, please contact me at 512/239-2245 or the Waste Evaluation Section at 512/239-6832.

(Signed) Chris Chandler

END OF ATTACHMENT

Section 02120

# OFF-SITE TRANSPORTATION AND DISPOSAL

## PART 1 GENERAL

### 1.01 SECTION INCLUDES

A. Off-site disposal of non-hazardous and hazardous solid, liquid and resinous waste.

### 1.02 MEASUREMENT AND PAYMENT

A. Unit Prices

1. Payment for transportation and disposal of Class II Soil at approved facility is on a cubic yard basis.

2. Payment for transportation and disposal of Class I Soil at approved facility is on a cubic yard basis.

3. No separate payment will be made for soil reused as backfill material.

4. Payment for transportation and disposal of contaminated groundwater at approved facility is on a per gallon basis.

5. No separate payment for groundwater discharged into a sanitary sewer.

6. Refer to Section 01270 - Measurement and Payment for unit price procedures.

B. Stipulated Price (Lump Sum). If the Contract is a Stipulated Price Contract, payment for work in this Section is included in the total Stipulated Price.

### 1.03 REFERENCES

A. CFR, Title 29, Section 1910.120.- Occupational Safety and Health Administration, Department of Labor.

B. Texas Administrative Code (TAC), Title 30, Chapter 335.- Industrial Solid Waste and Municipal Hazardous Waste.

C. TAC, Title 30, Chapter 334.- Underground and Aboveground Storage Tanks.

D. TAC, Title 30, Chapter 106.533.- Exemptions from Permitting, Subchapter X, Waste Processes and Remediation.

E. U.S. Environmental Protection Agency (EPA), (SW-846) Test Methods for Evaluating Solid Waste, Office of Solid Waste and Emergency Response, Washington, D.C. (P1388-239223, November 1986).

PART 2 P R O D U C T S (Not Used)

PART 3 E X E C U T I O N

3.01 HANDLING CATEGORY I AND II SOILS

A. Do not place Category II Soil back into excavation. Properly dispose of Category II Soil at the facility listed in Environmental Work Plan. Category I Soil consistent with classification as Class II PST Waste as defined by Texas Commission on Environmental Quality (TCEQ) in their interoffice memo dated 4/12/94, and not Category II Soil (as demonstrated through laboratory testing) can be reused as backfill material, provided;

1. Soil is reused in the same area from which it originated at depths greater than 30 inches below top of pavement, finished grade or ditch flowline, whichever is lower.

2. Soil has suitable engineering properties for backfill material as specified in Section 02320 - Utility Backfill Material.

3. Does not have indications of impact by contaminants other than petroleum.

B. Do not spread Category I or II Soil on ground surface.

C. Place Category I or II Soil in covered roll-off box with a minimum 20-mil plastic liner or in a stockpile at temporary storage area, pending receipt of analytical results and receipt of authorization from TCEQ and the disposal site for final disposal; or, in trucks for transport directly to the disposal facility.

1. Do not commingle Category I or II Soil from different locations or with different sources.

2. Temporary storage area to meet following criteria:

a. Within 2 miles of project site, to allow access by City personnel, unless otherwise approved by Project Manager.

b. Outside the 100-year floodplain.

c. Outside of, and not adjacent to, an area known or suspected to be a wetland.

d. Acceptable to Project Manager.

3. Secure using temporary fencing or other means of controlling access.

4. Place stockpiled soils on an impervious membrane. Surround with a berm to prevent migration of soils or moisture either into or out of the stockpile, other than evaporation.

5. Protect and cover the stockpile with minimum 20-mil plastic or other approved waterproof membrane covering. Replace damaged covers.

6. Do not place soil over monitoring wells or piezometers, utility line manholes, or any other potential route for water to migrate to subsurface.

7. Handle runoff from the temporary storage area in accordance with paragraph 3.02, Handling Water.

8. Do not stockpile soil for greater than 30 days.

9. Remove remaining material, including excavated soil from construction site, from temporary storage area prior to completion of Work.

D. Remove, handle, transport, stockpile, and dispose of Category II Soil under direction of Corrective Action Project Manager. Dispose waste classified (i.e., meets characteristics or other definitions of) a hazardous waste consistent with Resource Conservation and Recovery Act (RCRA) and 30 TAC Chapter 335.

E. Transport Category I or II Soil in accordance with Department of Transportation (DOT) and TCEQ rules and regulations.

F. Dispose Category I Soil, not reused as backfill, under direction of Corrective Action Project Manager, at a properly licensed facility with prior approval of Project Manager.

G. Obtain signed manifests from the receiving facility and provide originals to Project Manager.

H. Decontaminate large equipment to prevent cross-contamination with clean material. Steam clean or pressure wash dump trucks, bulldozers, backhoes, and other large equipment prior to use in uncontaminated areas after being used in PPCA.

3.02 HANDLING WATER

A. Prior to discharging petroleum contaminated groundwater, obtain an Industrial Wastewater Discharge Permit (no cost) from the City for disposal directly to a sanitary sewer which discharges to a City-owned wastewater treatment plant.

B. Procedures.

1. Provide equipment sized to handle flows anticipated by dewatering operations.

2. Include commercially available oil/water separator unit as part of the treatment system for dewatering operation discharging to sanitary sewer.

3. Do not exceed limits listed in Table 02120-2, Potentially Contaminated Groundwater Discharge Limits for groundwater discharged to the sanitary sewer. Provide additional treatment systems as needed prior to discharge to sanitary sewers where groundwater contamination levels exceed those noted in Table 02120-2. Approval by Project Manager shall be obtained for proposed treatment system prior to initiation of treatment and discharge.

4. Comply with all applicable requirements of 30 TAC, Chapter 106.533, including submitting a PI-7 form to the TCEQ for a standard exemption of oil/water separator unit, and any additional treatment systems. Submit copy of PI-7 form to Project Manager.

5. Do not discharge treated water into sanitary sewer if water level is within one foot of the top of sanitary sewer manhole or would cause an overflow situation.

6. Recover free product collected in treatment equipment. Recycle for beneficial reuse or dispose of recovered contaminants in a manner acceptable to Project Manager and TCEQ.

7. Transport potentially contaminated groundwater and free product in accordance with DOT and TCEQ rules and regulations for flammable products. Use DOT-licensed carrier for transport.

8. Obtain signed manifests for potentially contaminated groundwater and free product from the receiving facility and provide originals to Project Manager.

9. Furnish laboratory reports to Project Manager within one week of sample date.

C. Install and operate groundwater control systems, as described in Section 01578 - Control of Groundwater. Design and operate groundwater control systems so water from PPCA is handled in a system separated and isolated from groundwater control systems outside PPCA.

D. Handle, test, treat, and discharge potentially contaminated groundwater to the sanitary sewer in accordance with the City of Houston, Industrial Wastewater Discharge Permit requirements, or have water evacuated and hauled for off-site treatment and disposal at a TCEQ-permitted facility. Perform discharge under direction of Corrective Action Project Manager.

3.03 AIR MONITORING REQUIREMENTS

A. Ensure health and safety of workers at the construction site. Maintain air quality within the construction zone to conform to exposure limits specified in Code of Federal Regulations (CFR) Title 29, Section 1910.120 enforceable by OSHA.

B. Provide adequate shoring and sufficient escape ladders in accordance with applicable trench safety regulatory requirements.

C. In the trench, continuously operate a combustible gas indicator (CGI) with LEL/$O_2$ meter to monitor vapor and oxygen levels. Properly calibrate CGI and provide an alarm that sounds if greater than or equal to 20 percent Lower Explosive Limit (LEL), less than or equal to 19.5 percent oxygen, or greater than or equal to 25 percent oxygen is reached. Record monitoring data from CGI every 15 minutes to ensure safe work conditions.

D. Take appropriate measures during construction to keep LEL levels below 20 percent in the trench. If vapor concentrations exceed 20 percent of LEL stop construction work, turn off equipment, and have workers immediately vacate the PPCA in an upwind direction.

E. Take readings with PID/FID 50 feet downwind of area during excavation or work in contaminated excavation areas and until one hour after cessation of such work. Take readings within breathing zone at approximately 4 feet above ground level. Record readings, date, time, initials of person taking

reading, PID/FID serial number and last calibration date of PID/FID in bound field book.

3.04 DISPOSAL OF MATERIAL

A. Non-categorized Material. Dispose of excess or unsuitable excavated materials, not Category I or II Soil, off-site in accordance with Section 01576 - Waste Material Disposal.

B. Category I or II Soil. Dispose of excess or unsuitable excavated materials off-site at a state registered Treatment, Storage, or Disposal (TSD) facility. Obtain signed manifests from the receiving facility and provide originals to Project Manager.

**TABLE 02120-1**
**SOIL CRITERIA - PETROLEUM ONLY**

| Contaminant | Maximum[a] Concentration (mg/kg) | Method |
|---|---|---|
| TPH | 1500 | EPA 418.1/TX 1005 |
| Total BTEX | 150 | EPA 8020/8021 |
| Total Lead | 30 | EPA 6000/6010/7000 |

Notes: [a] If any parameters exceed the maximum concentrations, then the soil shall be considered Category II Soil and a Special Waste-PST as defined by the TCEQ in their interoffice memo dated 4/12/94.

Definitions: BTEX - benzene, toluene, ethyl benzene, and total xylenes
TPH - total petroleum hydrocarbons
mg/kg - milligrams per kilogram
mg/l - milligrams per liter

## TABLE 02120-2
## POTENTIALLY CONTAMINATED GROUNDWATER DISCHARGE LIMITS

| Parameter | Discharge to Sanitary Sewer | |
|---|---|---|
| | Limit | Method |
| TPH (mg/l) | 30.0 | EPA 418.1/TX 1005 |
| Total BTEX (mg/l) | 1.0 | EPA 602/8020/8021 |
| Lower Explosive Limit (%) | 10 | EPA 1010 |

Notes: See definitions above.

END OF SECTION

# SECTION 02314

# FILL MATERIAL

Harris County
Flood Control District

## PART 1 – GENERAL

### 1.1 SUMMARY

A. Section includes requirements for the acceptance and use of fill.

### 1.2 MEASUREMENT AND PAYMENT

A. No separate measurement and payment is made under this Section. Include cost for work under this Section in the related item listed on the Unit Price Schedule.
B. Measurement and payment is as noted on the Unit Price Schedule.
C. Refer to Section 01270 – Measurement and Payment for unit price procedures.

### 1.3 REFERENCES

A. ASTM D 1140 – Amount of Material in Soil Finer Than the No. 200 (75 µm) Sieve.
B. ASTM D 2487 – Classification of Soils for Engineering Purposes Unified Soil Classification System.
C. ASTM D 4647 – Identification and Classification of Dispersive Clay Soils by the Pinhole Test.
D. ASTM D 4318 – Liquid Limit, Plastic Limit, and Plasticity Index of Soils.

### 1.4 SUBMITTALS

A. Refer to Section 01330 – Submittal Procedures.
   1. Submit sample source identifying information including sample identification, one copy of map (including map's scale) identifying the location and boundaries of the designated site, source sketch, supplier and grab sample. Show the borrow site or pit and the proposed excavation location, sample location and approximate material depth(s) on the source sketch.
B. Submit test report based on:
   1. Laboratory determination of amount of material finer than the No. 200 (0.075 mm) sieve (ASTM D 1140).
   2. Liquid limit, plastic limit and plasticity index (ASTM D 4318).
   3. Pinhole test (ASTM D 4647, Method A).
   4. Classification shall be reported in accordance with ASTM D 2487 and include (as a minimum):
      a. Group name.

b. Group symbol.
c. Soil color(s).
d. Results of the laboratory tests.

## 1.5 CONSTRUCTION TESTS AND INSPECTION

A. Refer to Section 01457 – Construction Tests and Inspection.

# PART 2 – PRODUCTS

## 2.1 IMPORTED SELECT FILL MATERIAL

A. Use an approved material, free from roots, trash, organic matter and other objectionable material where imported select fill material is shown on the Plans or specified.
B. Where the imported select fill material is not specified elsewhere, the material shall be a fine-grained lean clay with sand (CL) or sandy lean clay (CL) soil material when classified in accordance with ASTM D 2487 and conforming to the following criteria:

| TEST DESCRIPTION | ASTM TEST | UNIT | VALUE |
|---|---|---|---|
| Maximum Liquid Limit | D 4318 | % | 49 |
| Plasticity Index Range | D 4318 | % | 15 – 30 |
| Passing No. 200 Sieve | D 1140 | % | 60 – 85 |
| Pinhole Test - Method A | D 4647 | - | ND1 – ND2 |

## 2.2 FILL MATERIAL EXCAVATION FROM ON-SITE

A. Where no other fill material is specified or shown, use inorganic soils from the on-site excavation that are free from roots, trash, organic matter and other objectionable material and classified by their group name and symbol in accordance with ASTM D 2487 as follows:

| GROUP NAME | GROUP SYMBOL |
|---|---|
| Lean Clay | CL |
| Lean Clay with Sand | CL |
| Sandy Lean Clay | CL |

B. Do not use peat or other organic matter, muck, debris or similar materials. The inorganic soils listed below may be used only with the approval of the Engineer:

| GROUP NAME | GROUP SYMBOL |
|---|---|
| Fat Clay | CH |
| Sand | SW, SP, SC or SM |

## PART 3 – EXECUTION

A. Refer to Section 02315 – Excavating and Backfilling.
B. Refer to Section 02316 – Structural Excavating and Backfilling.

**END OF SECTION**

# SECTION 02315

# EXCAVATING AND BACKFILLING

Harris County
Flood Control District

## PART 1 – GENERAL

### 1.1 SUMMARY

A. Section includes requirements for removing, stockpiling and replacing on-site vegetation and topsoil, excavating, repairing slopes, backfilling, grading the berms, backslope swales and related work. This Section does not include excavating and backfilling for structures.

### 1.2 MEASUREMENT AND PAYMENT

A. Where there is not a separate item listed on the Unit Price Schedule for work in this Section, no separate measurement and payment is made. Include cost for work under this Section in the related item listed on the Unit Price Schedule.
B. Measurement and payment is as noted on the Unit Price Schedule.
C. Refer to Section 01270 – Measurement and Payment for unit price procedures.
D. Measurement shall be based upon cross-sections, as required. See Paragraph 1.4 Definitions in this Section.
   1. Cross-sections obtained by Contractor shall be tied to the base line and, as a minimum, at the same locations and limits as the design cross-sections.
   2. Cross-sections obtained by Contractor shall be plotted at the same scale as design cross-sections where available or to the same horizontal and vertical scale where design cross-sections are not available.
   3. Plots of cross-section shall include pre-construction, intermediate, final and design cross-sections.
E. Cross-sections in areas of buried riprap or protective linings, such as riprap and concrete channel lining, shall be to the top of these materials. Excavation required for placement of such protective lining is considered structural excavation and incidental to the cost of related protective lining. See Section 02316 – Structural Excavating and Backfilling.
F. For small areas or other areas where limits can readily be determined visually, measurement may be by conventional taping and/or measuring techniques, as approved by the Engineer. Measurement shall be witnessed by the Engineer.
G. Where paid for separately, backslope swales shall be measured as noted on the Unit Price Schedule.
H. Contractor shall perform all quantity calculations for approval by Engineer.
I. No payment will be made for over-excavation or over-filling beyond the

design cross-sections, except as directed by the Engineer.

J. Support partial pay request quantities with pre-construction and intermediate cross-sections, Plan quantity calculations to-date or quantity calculations determined from field measurement techniques previously approved by the Engineer.

K. Support final pay request quantities by using pre-construction, intermediate and final cross-sections or final field measured quantity calculations, as approved by the Engineer.

## 1.3 REFERENCES

A. ASTM D 698 – Laboratory Compaction Characteristics of Soils Using Standard Effort (12,400 ft-lbf/ft$^3$ (600kN-m/m$^3$)).

## 1.4 DEFINITIONS

A. Existing Cross-Sections: Obtained by design engineer to prepare Plans and bid documents.

B. Pre-Construction Cross-Sections: Obtained by Contractor prior to construction to establish pre-construction conditions. Contractor may accept existing cross-sections as pre-construction cross-sections.

C. Intermediate Cross-Sections: Obtained by Contractor to establish extent of work, such as to remove disturbed soil and to repair slope failures.

D. Final Cross-Sections: Obtained by Contractor at completion of excavation and/or fill.

E. Design Cross-Section: Proposed channel section shown on Plans showing final grades.

## 1.5 SUBMITTALS

A. Refer to Section 01330 – Submittal Procedures.

B. Submit plotted cross-sections and earthwork quantity calculations in tabular form.

## 1.6 CONSTRUCTION TESTS AND INSPECTION

A. Refer to Section 01457 – Construction Tests and Inspection.

# PART 2 – PRODUCTS

## 2.1 FILL MATERIAL

A. Refer to Section 02314 – Fill Material.

## PART 3 – EXECUTION

### 3.1 SITE PREPARATION

A. Prepare the site for construction in accordance with Section 02200 – Site Preparation and Restoration and Section 02233 – Clearing and Grubbing.
B. Remove grass and other vegetative cover from areas to be excavated or filled.
C. Remove material that may interfere with the proposed work, including unusable materials, disturbed soils and/or objectionable material as directed by Engineer.
D. Engineer will inspect and approve foundation soil prior to placement of fill.

### 3.2 TOPSOIL

A. Refer to Section 02911 – Topsoil.

### 3.3 CARE AND CONTROL OF WATER

A. Refer to Section 02241 – Care and Control of Water.

### 3.4 CONSTRUCTION

A. Construct to lines, grades and dimensions shown on the Plans.
B. Return over-excavation beyond the specified limits to grade at no cost to the District in accordance with Paragraph 3.5 of this Section.
C. Do not cast or place material, either temporarily or permanently, on top of bank without approval of Engineer.
D. Do not cut temporary shelves into side slopes without approval of Engineer.
E. Correct grading that results in standing water at no cost to the District.
F. Grade side slopes as required by the Engineer to smoothly transition the lateral into the main channel at locations where lateral ditches enter the channel.

### 3.5 FILL

A. Level soil surface prior to placing first layer of fill.
B. Compaction of foundation soil surface shall be considered satisfactory when the Contractor is capable of achieving specified compaction for the first layer of fill.
C. Protect foundation soils and/or fill soils from detrimental drying.
D. Scarify surfaces to receive fill to ensure proper bonding. When the surface can be penetrated by tamping roller feet, additional scarification is usually not necessary.
E. Cut into existing (undisturbed) material in a "benching" or "stair step" fashion. Each bench shall form a horizontal surface and corresponding

nearly vertical surface. The height difference between adjacent horizontal surfaces shall be a minimum of 3 feet.

F. Mechanically compact backfill provided under Section 02314 – Fill Material in 8-inch maximum layers, loose measure, to not less than 95 percent of maximum standard dry density (ASTM D 698) within plus or minus 3 percent of optimum moisture content. Where approved for use by the Engineer, fat clay (CH) soil shall be mechanically compacted to not less than 95 percent or more than 98 percent of maximum standard dry density (ASTM D 698) at or within plus 3 percent of optimum moisture content.

G. Refer to Section 02316 – Structural Excavating and Backfilling for backfilling behind retaining structures, unless shown otherwise on the Plans.

## 3.6 BACKSLOPE DRAINAGE SYSTEMS

A. Backslope swale and interceptor structure elevations and locations shown on the Plans are approximate. Final elevations and locations shall be field verified by the Engineer prior to installation. Minor changes in location and grade shall be considered incidental and no extra payment will be made for such adjustments.

## 3.7 MAINTENANCE OF DRAINAGE

A. Maintain constant flow and drainage in the main and lateral channels, backslope swales and off-site swales.

## 3.8 EROSION AND SEDIMENT CONTROL

A. Use means, methods, sequences and scheduling to minimize erosion and sedimentation and other damage to the project site and facilities, including the following:

1. Limit work in this Section to no more than 1500 feet of channel at any time.
2. Construct backslope drainage system, silt fences and vegetate each reach of the channel as soon as practical. Refer to Section 02361 – Silt Fences and Section 02921 – Turf Establishment.
3. Failure to construct erosion control facilities in a timely manner,may result in a directive to do so. Engineer may stop construction on the project if, in the opinion of the Engineer, conditions warrant such action.
4. Remove sediment and debris prior to final acceptance of the Work by the Engineer at no additional cost to the District. The removal of sediment includes reaches of channel downstream of the project where sedimentation occurred due to construction of this Project.
5. Comply with terms and conditions of the Texas Pollutant Discharge Elimination System (TPDES) permit, the Stormwater Pollution Prevention Plan (SWPPP) and Best Management Practices (BMPs) for

this Project, if applicable.

## 3.9 MATERIAL DISPOSAL

A. Refer to Section 02120 – Material Disposal.

**END OF SECTION**

Harris County
Flood Control District

# SECTION 02378

# RIPRAP AND GRANULAR FILL

## PART 1 – GENERAL

### 1.1 SUMMARY

A. Section includes requirements for furnishing and installing riprap and granular fill and filling and burying riprap, when required.

### 1.2 MEASUREMENT AND PAYMENT

A. Where there is not a separate item listed on the Unit Price Schedule for work in this Section, no separate measurement and payment is made. Include cost for work under this Section in the related item listed on the Unit Price Schedule.
B. Measurement and payment is as noted on the Unit Price Schedule.
C. Refer to Section 01270 – Measurement and Payment for unit price procedures.
D. Excavation for riprap and buried riprap will not be measured separately, but is incidental to riprap surface measurement.
E. Riprap and granular fill used in toe walls, grade beams or termination trenches are incidental to surface measurement.
F. On-site topsoil will not be measured and paid separately, but is incidental to riprap surface measurement.
G. Imported topsoil will be paid for as noted on the Unit Price Schedule.

### 1.3 DELIVERY, STORAGE AND HANDLING

A. Keep the storage area clean, firm, smooth and well drained in order that the product can be placed with a minimum of foreign matter.
B. Stockpile and handle riprap and granular fill to minimize segregation of particle sizes either in the stockpile or while loading, hauling and handling.

## PART 2 – PRODUCTS

### 2.1 RIPRAP

A. Provide riprap consisting of broken concrete or stone. Provide riprap that is dense, durable and hard material free from cracks, seams and other defects which would increase deterioration from handling and natural causes.
B. Shape and Dimensions.
   1. Provide riprap in cubic form, rather than elongated (flat) shapes.
   2. Provide riprap with a minimum thickness of 6 inches.

3. No more than 25 percent shall have a length greater than 2-1/2 times the width or thickness. No length shall exceed 3 times the width or thickness.

C. Do not provide spalls, fragments and chips exceeding 5 percent by weight. The dimension and shape limitations do not apply to this portion of the riprap.

D. Where broken concrete is used, cut exposed metal flush with the surface prior to placing the riprap.

E. Provide riprap conforming to the following tables:

**TABLE 1**

RIPRAP GRADATION NO. 1

| Percent Lighter by Weight | Stone Weight Lbs. Lower Limit | Stone Weight Lbs. Upper Limit | Volume Cubic Ft (2) Lower Limit | Volume Cubic Ft (2) Upper Limit | Cubical Shape Ft (Each Side) Lower Limit | Cubical Shape Ft (Each Side) Upper Limit | Spherical Shape Ft (Dia.) Lower Limit | Spherical Shape Ft (Dia.) Upper Limit |
|---|---|---|---|---|---|---|---|---|
| 100 | 180 | 265 | 1.20 | 1.77 | 1.06 | 1.21 | 1.31 | 1.50 |
| 50 | 80 | 110 | 0.53 | 0.73 | 0.81 | 0.90 | 1.01 | 1.12 |
| 15 | 40 | 60 | 0.27 | 0.40 | 0.64 | 0.74 | 0.80 | 0.91 |

Notes:

1. The theoretical cube and sphere size is presented for guidance only. Paragraph 2.1 shall control riprap shape and dimensions.
2. Volume is based on 150 pcf, unit weight.
3. Riprap Gradation No. 1 is to be used where an 18 inch thick riprap mat is noted on the Plans.

**TABLE 2**

RIPRAP GRADATION NO. 2

| Percent Lighter by Weight | Stone Weight Lbs. Lower Limit | Stone Weight Lbs. Upper Limit | Volume Cubic Ft (2) Lower Limit | Volume Cubic Ft (2) Upper Limit | Cubical Shape Ft (Each Side) Lower Limit | Cubical Shape Ft (Each Side) Upper Limit | Spherical Shape Ft (Dia.) Lower Limit | Spherical Shape Ft (Dia.) Upper Limit |
|---|---|---|---|---|---|---|---|---|
| 100 | 260 | 640 | 1.73 | 4.27 | 1.20 | 1.62 | 1.49 | 2.01 |
| 50 | 130 | 200 | 0.87 | 1.33 | 0.95 | 1.10 | 1.18 | 1.37 |
| 15 | 40 | 150 | 0.27 | 1.00 | 0.64 | 1.00 | 0.80 | 1.24 |

Notes:

1. The theoretical cube and sphere size is presented for guidance only. Paragraph 2.1 shall control riprap shape and dimensions.
2. Volume is based on 150 pcf, unit weight.
3. Riprap Gradation No. 2 is to be used where a 24 inch thick riprap mat is noted on the Plans.

## 2.2 GRANULAR FILL

A. Provide granular fill consisting of concrete or stone. Provide granular fill that is dense, durable and hard material.

B. Provide granular fill, as shown on the Plans or as directed by the Engineer, to the following dimensions:

1. Provide 3 inch to 5 inch granular fill with no material diameter less than 3 inches and no material diameter greater than 5 inches.

2. Provide 4 inch to 8 inch granular fill with no material diameter less than 4 inches and no material diameter greater than 8 inches.
3. Provide riprap Gradation No. 1 and Gradation No. 2 as shown on the Plans or as directed by the Engineer.

C. Do not provide spalls, fragments and chips exceeding 5 percent by weight.
D. Where broken concrete is used, cut exposed metal flush with the surface prior to placing granular fill.

## 2.3 GEOTEXTILE

A. Refer to Section 02379 – Geotextiles for Erosion Control Systems.

# PART 3 – EXECUTION

## 3.1 GRADE PREPARATION

A. Refer to Section 02241 – Care and Control of Water.
B. Trim and dress the channel bottom and side slopes to proper lines and grade prior to placing riprap or granular fill. Where shown on the Plans, place geotextile in accordance with Section 02379 – Geotextiles for Erosion Control Systems.
C. The Engineer will inspect prepared section prior to placing geotextile, riprap or granular fill.

## 3.2 EXCAVATION AND FILL

A. Excavate the channel. Refer to Section 02315 – Excavating and Backfilling.
B. Excavate for riprap. Refer to Section 02316 – Structural Excavating and Backfilling.

## 3.3 RIPRAP OR GRANULAR FILL PLACEMENT

A. Place the riprap or granular fill to the slopes, lines and grades as shown on the Plans.
B. To establish a well-graded mass of riprap with minimal voids, fill voids between larger riprap blocks with spalls and smaller blocks of the largest feasible size to form a compact mass. Do not place spalls and small blocks in place of larger size riprap or granular fill.
C. Install riprap and granular fill mat to the thickness as shown on the Plans. Riprap shall have minimum mat thickness as shown on the gradation tables.
D. Place the riprap and granular fill to avoid displacement or damage to the prepared surface or geotextile and in a manner to avoid segregation of particle sizes.

E. Fill riprap voids and bury riprap a minimum of 6 inches with topsoil on side slopes as directed by the Engineer.

**END OF SECTION**

Section 2752S

*The following supplement modifies Section 02752 Standard Specification. Where a portion of the Specification is modified or deleted by this Supplementary Specification, the unaltered portions of the Specification shall remain in effect.*

1.01 SECTION INCLUDES.

Add Part C as follows.
C. Full depth saw cutting of concrete pavement as required by other agency.

1.02 MEASUREMENT AND PAYMENT

Add item 6.
6. Full depth Saw cutting for concrete pavement will be paid on linear foot base, if required by other agency for joining with existing roadway.

Renumber item 6 as 7

END OF SUPPLEMENT

Approved:

John H Kuo, P.E.
Assistant Director
Engineering and Construction Division

12/29/09
Date

# APPENDIX A

## STORM WATER POLLUTION PREVENTION PLAN

# STORM WATER POLLUTION PREVENTION PLAN

**FOR**

BUFFALLO SPEEDWAY PAVING AND DRAINAGE FROM WEST AIRPORT BOULEVARD TO HOLMES ROAD
HOUSTON, TX
WBS NO. N-000784-0001-4

Prepared for:
CITY OF HOUSTON
DEPARTMENT OF PUBLIC WORKS AND ENGINEERING
ENGINEERING AND CONSTRUCTION DIVISION

Prepared by:
CLR, Inc.
July 2014

# TABLE OF CONTENTS

1.0 REGULATIONS

2.0 PROJECT INFORMATION

3.0 SITE DESCRIPTION

- A. Description of them Construction Activity
- B. Sequence of Major Activities
- C. Estimated Total Site Area and Disturbed Area
- D. Runoff Coefficient/Soils Data
- E. Name of Receiving Water

4.0 CONTROLS

- A. Erosion and Sediment Controls
- B. Storm Water Management
- C. Other Controls
- D. Approved State or Local Plans

5.0 MAINTENANCE

6.0 INSPECTIONS

7.0 NON-STORM WATER DISCHARGES

8.0 TECHNICAL SPECIFICATIONS

9.0 CERTIFICATIONS

APPENDIX A - INSPECTION AND MAINTENANCE REPORT FORMS

APPENDIX B - DRAWINGS & STANDARD DETAILS

APPENDIX C - GENERAL PERMIT NO. TXR 150000

## 1.0 REGULATIONS

Section 405 of the Water Quality Act of 1987 (WQA) added section 402(p) of the Clean Water Act (CWA) which requires the Environmental Protection Agency (EPA) to develop a phased approach to regulating storm water discharges under the National Pollutant Discharge Elimination System (NPDES) program.

On November 16, 1990, EPA published regulations under the NPDES program which defined the term "storm water discharge associated with industrial activity" to include storm water discharges from construction activities (including clearing, grading, and excavation activities) that result in the disturbance of five or more acres of total land area, including areas that are part of a larger common plan of development or sale. On September 9, 1992, EPA published final regulations for NPDES General Permits for Storm Water Discharge from Construction Sites, which are currently in effect and can be found in Appendix A, B, C, & D. Since this project includes clearing, grading and excavation activities covering over 5 acres, NPDES permitting applies. A Notice of Intent for this contract, City of Houston WBS No. N-000784-0001-4, follows.

The City of Houston Department of Public Works has prepared this Storm Water Pollution Prevention Plan and assisted in the application of the Notice of Intent (NOI) to operate under the appropriate EPA NPDES general permit

## 2.0 PROJECT INFORMATION

Project Name and Location

Buffalo Speedway Paving and Drainage from West Airport Boulevard to Holmes Road.

Owner Name and Address

City of Houston
Department of Public Works and Engineering
611 Walker
Houston, Texas 77002
(832) 395-2511

Contractor Name and Address

Subcontractor Name and Address

## 3.0 SITE DESCRIPTION

A. Description of the Construction Activity

Construction of proposed 4-lane roadway, concrete, curb and gutter boulevard with storm sewer, outfalls, detention basins, asphalt transitions and widening, 24-inch water main, concrete sidewalks, and all necessary appurtenances for approximately 1.52 miles of new alignment for Buffalo Speedway and approximately 0.21 miles along existing Holmes Road.

B. Sequence of Major Activities

The project is expected to be completed within 442 calendar days. The construction access, staging, parking, and wash areas will be constructed in the first step. This will be followed by clear and grubbing, excavation, embankment, installation of utilities; construction of pavement work project progression will be the removal of pavement or vegetation within the right-of-way; the adjustment of utilities; construction of the storm sewer including excavation, bedding and backfill; reconstruction of the pavement and sidewalks; and the grading and sodding of un-stabilized areas.

C. Estimated Total Site Area and Disturbed Area

The total area in this segment of the project is 62 acres. All of this area will be disturbed at one time or another during the project.

D. Runoff Coefficient

The rainfall-runoff coefficient for the project is 0.215.

E. Name of Receiving Water

The project drains to HCFCD C100-00-00 (Sims Bayou). There are no known existing wetlands at the site.

## 4.0 CONTROLS

A. Erosion and Sediment Controls

Major erosion and sediment controls are shown on the site maps in Appendix B.

1. Stabilization Practices

   a. The onsite staging, parking areas and construction exits will be stabilized using coarse aggregate. A filter fabric fence will surround the staging and parking area. Water from the wash-down area will drain to a sediment trap and then to the existing conveyance systems.

   b. In completed pavement sections, all disturbed soils in the right-of-way will be stabilized with sodding and hydromulch to minimize erosion and sediment as soon as possible.

   c. At the end of paving work, all disturbed areas that are not paved will be sodded and hydromulched as specified on the construction drawings.

2. Structural Practices

   a. Inlet protection baskets will be placed at the inlets as shown on the construction drawings to remove sediments from runoff.

   b. When storm inlets arc removed in the course of the waterline construction, the exposed pipe will be covered with filter fabric to reduce sediment inflow.

   c. A vehicle/equipment wash area stabilized with coarse aggregate will be established near the staging/parking area for trucks and equipment leaving the site. Wash water will be directed to a sediment trap and the released into the existing conveyances and/or the newly constructed storm sewer system.

3. Sequence of Major Erosion and Sediment Control Activities

   The erosion and sediment control activities for the project will occur in phases. During the excavation phase of the project, dump trucks that are to be used for hauling away the excavated material will travel through the stabilized entrance/exit and/or remain parked on the existing pavement when practical. Any loose excavated material that falls on the pavement will be swept back into the excavated area. During a rainfall event, the excavated area will serve as a sediment trap and will prevent disturbed soils from being carried to the storm inlets. All materials and supply trucks shall remain parked on existing pavement during their unloading when practical. Once the excavated area is paved and/or repaved,

   backfilled and re-graded, the disturbed soils will be sodded. Lastly, the

construction exit, staging, and parking areas will be removed and stabilized.

Completion of the project is expected within 442 calendar days.

B. Storm Water Management

1. The infiltration systems for storm water treatment include filter fabric fence, reinforced filter fabric fence, inlet protection barriers and inlet sediment traps. The revegetated landscaping strips will be used to the extent practicable for flow attenuation purposes.

2. Storm water from the roadway will discharge into the interceptor swale, curb and gutter system, and then drain into a detention basin. No velocity dissipation devices are needed.

C. Other Controls

1. Waste Disposal - Waste Materials

All waste materials will be collected and stored in securely lidded metal dumpsters rented from the _____ which is a licensed solid waste management company in Houston. The dumpsters will meet all local and State solid waste management regulations. All trash and construction debris from the *site* will be deposited in the dumpsters. The trash and debris will be hauled to an approved landfill. No construction waste material will be buried on site. All personnel will be instructed regarding the correct procedure for waste disposal. Notices stating these practices will be posted *in* the office trailer and _____, the individual who manages the day-to-day site operations will be responsible for seeing that these procedures are followed.

2. Waste Disposal - Hazardous Waste

Anticipated Potential Petroleum Contaminated Areas (PPCA) have been shown on the plans. If hazardous waste is encountered, all hazardous waste materials will be disposed of in the manner specified by local or State regulation or by the manufacturer. _____, the individual who manages day-to-day site operations, will be responsible for seeing that these practices are followed.

3. Waste Disposal - Sanitary Waste

All sanitary waste will be regularly collected from the portable units by the _____ company, a licensed sanitary waste management contactor.

4. Off Site Vehicle Tracking

A stabilized construction exit will be provided to help reduce vehicle tracking of sediments.

A stabilized vehicle/equipment washing *area* will be provided to help

remove dirt and loose material from vehicles and equipment. Wash water will be directed to sediment traps, with eventual discharge into storm water conveyance system.

The paved streets adjacent to the site entrance will be cleaned daily, as necessary, to remove any excess mud, dirt, or rock tracked from the site.

5. Demonstration of Compliance with State or Local Plans

The proposed project will be in compliance with applicable State and local waste disposal and sanitary sewer regulations.

6. Dewater Operations

A sediment tank for discharged water from dewatering operations shall be used.

D. Approved State or Local Plans

There is no approved State or local site plan requirement for storm water management or erosion and sediment control.

## 5.0 MAINTENANCE

The following is a list of erosion and sediment controls to be used on this project

*Stabilization Practices*

- Stabilized construction entrance/exit
- Stabilized onsite staging and parking areas
- Sod disturbed soil as soon as possible
- Sod all disturbed areas that are not paved, upon completion of paving work

*Structural Practices*

- Inlet protection barriers
- Filter fabric fences
- Reinforced filter fabric barriers
- Stabilized vehicle/equipment wash area, with wash water directed to a sediment trap, and then released into a diversion swale.
- Sediment tank for discharged water from dewatering operations
- Immediate removal of trench excavation spoils or backfilling in a continuous operation
- Storm sewers, gutters and storm inlet sediment traps for the Stage I storm sewer inlets

*To maintain the above practices, the following will have to be done:*

- Maintenance and repairs will be conducted within 24 hours of inspection report (see Section 6.0 below).
- Sediment will be removed from behind the reinforced filter fabric barriers, straw bale fences or other devices when it becomes about 1/3 the height of the device. Sediment will be removed from the sediment trap when storage capacity has been approximately 50% filled.
- Any sediment in the storm sewer inlets will be removed.
- All temporary controls will be removed alter the disturbed areas have been stabilized.

## 6.0 INSPECTIONS

A. Each contractor will designate a qualified *person* or persons to perform the following inspections:

Disturbed areas and areas use for storage of materials that are exposed to precipitation will be inspected for evidence of, or the potential for, pollutants entering the drainage system.

Erosion and sediment control measures identified in the plan will be observed to ensure that they are operating correctly.

Where discharge locations or points are accessible, they will be inspected to ascertain whether erosion control measures are effective in preventing significant impacts to receiving waters.

Locations where vehicles enter or exit the site will be inspected for evidence of offsite sediment tracking.

The vehicle/equipment wash area will be inspected for loss of aggregate, proper drainage, and proper maintenance of sediment trap and washing equipment.

The inspection will be conducted by the responsible person at least once every 7-calendar days and within 24 hours after a storm of 0.5 inch or greater.

After a portion of the site is finally stabilized, inspection will be conducted at least once every month until the entire site is stabilized.

B. Based on the results of the inspection, the site description (Section 3.0) and control measures (Section 4.0) of this SWPPP will be revised as appropriate, but in no case later than 7 calendar days following the inspection.

C. A report summarizing the scope of the inspection, names) and qualifications of personnel making the inspection, the date(s) of the inspection, major observations relating to the implementation of the storm water pollution prevention plan, and actions taken in accordance with Item "B" above will be made and retained as part of the storm water pollution prevention plan for at least three years front the date that the site is finally stabilized. The report will be signed in accordance with Part VI.G of the General Permit.

Copies of the forms to be used for the Inspection and Maintenance reports are included in Appendix B.1 of this plan.

# 7.0 NON-STORM WATER DISCHARGES

Inventory for Pollution Prevention Plan

The following substances listed below are expected to be present on site during construction:

Concrete
Detergents
Paints
Fertilizers
Fuels
Cleaning Solvents
Lubricants
Wood
Lime Slurry
Steel

Spill Prevention

The following are the material management practices that will be used to reduce the risk of spills or other accidental exposure of materials and substances to storm water runoff.

*Good Housekeeping*

The following are good housekeeping practices to be followed on site during the construction project.

1. An effort will be made to store only enough products required to do the job.

2. All materials stored onsite will be stored in a neat, orderly manner in their appropriate container and, if possible, under a roof or other enclosure.

3. Products will be kept in their original containers with the original manufacturer's label.

4. Substances will not be mixed with one another unless recommended by the manufacturer.

5. Whenever possible, all of a product will be used up before disposing of the container.

6. Manufacturers' recommendations for proper use and disposal will be followed.

7. The site superintendent will inspect daily to ensure proper use and disposal of materials onsite.

*Hazardous Products*

These practices will be used to reduce the risks associated with hazardous materials, if hazardous materials are used.

1. Products will be kept in original containers unless they are not resealable.
2. Original labels and material safety data will be retained.
3. If surplus product must be disposed of; it will be done according to manufacturers' recommended methods or according to State and local regulations.

*Product Specific Practices*

The product specific practices to be followed are listed in Table 1.

*Spill Prevention Practices*

The spill prevention practices to be followed are listed in Table 1.

# TABLE 1

## Product Specific Practices

The following product specific practices will be followed onsite:

Petroleum Products: All onsite vehicles will be monitored for leaks and receive regular preventive maintenance to reduce the chance of leakage. Petroleum products will be stored in tightly sealed containers that are clearly labeled. Any asphalt substances used onsite will be applied according to the manufactures recommendations.

Fertilizers: Fertilizers used will be applied only in the minimum amounts recommended by the manufacturer. Once applied, fertilizer will be worked in the soil to limit exposure to storm water. Storage will be in & covered shed. The contents of any partially used bags of fertilizer will be transferred to a sealable plastic bid to avoid spills.

Paints: All containers will be tightly sealed and stored when not required for use. Excess paint will not be discharged to the storm sewer system but will be properly disposed of according to manufacturers' instructions or State and local regulations.

Concrete Trucks: Concrete trucks will not be allowed to wash out or discharge surplus concrete or drum wash water on the site.

## Spill Prevention Practices

In addition to the good housekeeping and material management practices discussed in the previous sections of this plan, the following practices will be followed for spill prevention and cleanup:

Manufacturers' recommended methods for spill cleanup will be clearly posted and site personnel will be made aware of the procedures and the location of the information and cleanup supplies.

Materials and equipment necessary for spill cleanup will be kept in the material storage area onsite. Equipment and materials will include but not be limited to brooms, dustpans, mops, rags, gloves, goggles, kitty litter, and, sawdust, and plastic and metal trash containers specifically for this purpose.

All spills will be cleaned up immediately after discovery.

The spill area will be kept well ventilated and personnel will wear appropriate protective clothing to prevent injury from contact with a hazardous substance.

Spills of toxic or hazardous material will be reported to the appropriate State or local government agency, regardless of the size.

The spill prevention plan will be adjusted to include measures to prevent this type of spill from reoccurring and bow to clean up the spill if there is another one. A description of the spill, what caused it, and the cleanup measures will also be included.

Mr./Ms. _____, the site superintendent responsible for the day-to-day site operations, will be the spill prevention and cleanup coordinator. He will designate at least three other site personnel who will receive spill prevention and cleanup training. These individuals will each become responsible for a particular phase of prevention and cleanup. The names of responsible spill personnel will be posted in the material storage area and in the office trailer onsite.

- **Blanks to be filled in by contractor**

## 8.0 TECHNICAL SPECIFICATIONS

This section is not required by the General Permit, but is included for information imposes.

A list of control measures which have corresponding standard specifications in the *Storm Water Management Handbook for Construction Activities (SWMHCA)* prepared by Harris County/Harris County Flood Control District and the City of Houston dated September 17, 1992 are given below, together with their specification item numbers.

### ITEMS SPECIFIED

| Specification No. | Item |
|---|---|
| 01570 | Storm Water Pollution Control |
| 01575 | Stabilized Construction Exit |
| 01576 | Waste Material Disposal |
| 01578 | Control of Ground Water and Surface Water |

| Standard Abbreviations | Item |
|---|---|
| FF | Filter Fabric Fence |
| RFB | Reinforced Filter Fabric Barrier |
| TFF | Triangular Filter Fabric Fence |
| IPB | Curb Inlet Protection Barrier |
| SC | Stabilized Construction Exit |
| ST | Portable Sediment |

## 9.0 CERTIFICATIONS

Certifications, as required by the regulations, follow. These must be completed before any professional service is performed at the site.

## INSPECTOR CERTIFICATION

City of Houston
Buffalo Speedway: West Airport Boulevard to Holmes Road
WBS No. N-000784-0001-4

Work on the Contract is for the construction of a proposed 4-lane roadway, concrete, curb and gutter boulevard with storm sewer, outfalls, waterline, asphalt transition(s), traffic signals (if required), and all necessary appurtenances for the 1.52 mile long Buffalo Speedway construction project:

- Construct new proposed 4-lane roadway, curb and gutter boulevard for the 1.52 mile long Buffalo Speedway construction project.
- Asphalt transition for the intersection of Holmes Road at the Buffalo Speedway Connector.
- Design proposed drainage system for project that assures no adverse impact to surrounding water surface elevations.
- Proposed waterline from West Airport Boulevard to existing Buffalo Speedway across Holmes Road along proposed Buffalo Speedway.
- Provide sidewalks, appropriate ramps and light conduit with pull boxes in accordance with COH guidelines.
- Signing and striping from West Airport Boulevard to Holmes Road along Buffalo Speedway.
- Traffic Control Plan for Project limits.

**Latitude: 29° 38' 59" N**
**Longitude: 95° 25' 49" W**

I certify under penalty of law that this document and all attachments were prepared under my direction or supervision in accordance with a system designed to assure that qualified personnel properly gathered and evaluated the information submitted. Based on my inquiry of the person or persons who manage the system, or those persons who manage the system, or those persons directly responsible for gathering the information, the information submitted is, to the best of my knowledge and belief, true, accurate and complete. I am aware that there are significant penalties for submitting false information, including the possibility of fine and imprisonment for knowing violations.

Signed: _____

Date: _____

## CONTRACTOR'S CERTIFICATION

City of Houston
Buffalo Speedway: West Airport Boulevard to Holmes Road
WBS No. N-000784-0001-4

Work on the Contract is for the construction of a proposed 4-lane roadway, concrete, curb and gutter boulevard with storm sewer, outfalls, waterline, asphalt transition(s), traffic signals (if required), and all necessary appurtenances for the 1.52 mile long Buffalo Speedway construction project:

- Construct new proposed 4-lane roadway, curb and gutter boulevard for the 1.52 mile long Buffalo Speedway construction project.
- Asphalt transition for the intersection of Holmes Road at the Buffalo Speedway Connector.
- Design proposed drainage system for project that assures no adverse impact to surrounding water surface elevations.
- Proposed waterline from West Airport Boulevard to existing Buffalo Speedway across Holmes Road along proposed Buffalo Speedway.
- Provide sidewalks, appropriate ramps and light conduit with pull boxes in accordance with COH guidelines.
- Signing and striping from West Airport Boulevard to Holmes Road along Buffalo Speedway.
- Traffic Control Plan for Project limits.

**Latitude: 29° 38' 59" N**
**Longitude: 95° 25' 49" W**

I certify under penalty of law that I understand the terms and conditions of the general Texas Pollutant Discharge Elimination System (TPDES) permit that authorizes the storm water discharges associated with industrial activity from the construction site identified as part of this certification.

Signature: For: Responsible for:

_____

Date:_____

## PREPARER'S CERTIFICATION FOR THE STORMWATER POLLUTION PREVENTION PLAN

Project Name and Location:

Project Name: Proposed Paving, Drainage and Waterline from West Airport Boulevard to Holmes Road.

Location: **Latitude: 29° 38' 59" N**
**Longitude: 95° 25' 49" W**

I certify under penalty of law that this document and all attachments were prepared under my direction of supervision in accordance with a system designed to assure that qualified personnel properly gathered and evaluated the information submitted. Based on my inquiry of the person or persons who manage the system, or those persons who manage the system, or those persons directly responsible for gathering the information, the information submitted is, to the best of my knowledge and belief, true, accurate and complete. I am aware that there are significant penalties for submitting false information, including the possibility of fine and imprisonment for knowing violations.

Stormwater Pollution Prevention Plan prepared by:

_____
Company

_____
Name

_____
Title

_____
Signature

_____
Date

Date Prepared: _____

Latest Revision: _____

# APPENDIX A
# INSPECTION AND MAINTENANCE REPORT FORMS

# Storm Water Construction Site Inspection Report

| General Information | | | |
|---|---|---|---|
| **Project Name** | | | |
| **TPDES Tracking No.** | | **Location** | |
| **Date of Inspection** | | **Start/End Time** | |
| **Inspector's Name(s)** | | | |
| **Inspector's Title(s)** | | | |
| **Inspector's Contact Information** | | | |
| **Inspector's Qualifications**<br>• *Insert qualifications or add reference to the SWPPP. (See Section 5 of the SWPPP Template)* | | | |
| **Describe present phase of construction** | | | |

**Type of Inspection:**
☐ Regular ☐ Pre-storm event ☐ During storm event ☐ Post-storm event (_____ inches received at site)

**Waters of the U.S. (CWA & RHA Compliance)**
**U.S. Army Corps of Engineers Regulatory Compliance**
**Completed under USACE Subject No. SWG-_____-**

**Does this project area contain jurisdictional waters of the U.S.?** ☐Yes ☐No
**If yes, are the jurisdictional waters impacted in any way by the proposed work?** ☐Yes ☐No
If yes, impacts are permitted by ☐NWP(s) _____ or ☐ Individual Permit Issued on the following Date: _____.
If this is an Individual Permit is the Site Notice Posted with SWPPP notices? ☐Yes ☐No

Weather Information

**Has there been a storm event since the last inspection?** ☐Yes ☐No
**If yes, provide:**
Storm Start Date & Time: Storm Duration (hrs): Approximate Amount of Precipitation (in):

**Weather at time of this inspection?**
☐ Clear ☐Cloudy ☐ Rain ☐ Sleet ☐ Fog ☐ Snowing ☐ High Winds
☐ Other: Temperature:

**Have any discharges occurred since the last inspection?** ☐Yes ☐No
**If yes, describe:**

**Are there any discharges at the time of inspection?** ☐Yes ☐No
**If yes, describe:**

**Migratory Bird Treaty Act (MBTA) Compliance**

**The MBTA provides that it is unlawful to pursue, hunt, take, capture, kill, possess, sell, purchase, barter, import, export or transport any migratory bird, or any part, nest, or egg or any such bird, unless authorized under a permit issued by the Secretary of the Interior.**

**Does this SWPPP inspection fall between March 1 and August 31?** ❑Yes ❑No
**If yes, during the inspection did you observe nesting birds or birds constructing nests within the project area?** ❑Yes ❑No
***If yes, please note the location of the nest and contact the Engineer. No work is to occur in the area until authorized by the Engineer.***

**Site-specific BMPs**

- *Number the structural and non-structural BMPs identified in your SWPPP on your site map and list them below (add as many BMPs as necessary). Carry a copy of the numbered site map with you during your inspections. This list will ensure that you are inspecting all required BMPs at your site.*
- *Describe corrective actions initiated, date completed, and note the person that completed the work in the Corrective Action Log.*

| | BMP | BMP Installed? | BMP Maintenance Required? | Corrective Action Needed and Notes |
|---|---|---|---|---|
| 1 | | ❑Yes ❑No | ❑Yes ❑No | |
| 2 | | ❑Yes ❑No | ❑Yes ❑No | |
| 3 | | ❑Yes ❑No | ❑Yes ❑No | |
| 4 | | ❑Yes ❑No | ❑Yes ❑No | |
| 5 | | ❑Yes ❑No | ❑Yes ❑No | |
| 6 | | ❑Yes ❑No | ❑Yes ❑No | |
| 7 | | ❑Yes ❑No | ❑Yes ❑No | |
| 8 | | ❑Yes ❑No | ❑Yes ❑No | |
| 9 | | ❑Yes ❑No | ❑Yes ❑No | |
| 10 | | ❑Yes ❑No | ❑Yes ❑No | |
| 11 | | ❑Yes ❑No | ❑Yes ❑No | |
| 12 | | ❑Yes ❑No | ❑Yes ❑No | |
| 13 | | ❑Yes ❑No | ❑Yes ❑No | |
| 14 | | ❑Yes ❑No | ❑Yes ❑No | |
| 15 | | ❑Yes ❑No | ❑Yes ❑No | |
| 16 | | ❑Yes ❑No | ❑Yes ❑No | |
| 17 | | ❑Yes ❑No | ❑Yes ❑No | |
| 18 | | ❑Yes ❑No | ❑Yes ❑No | |
| 19 | | ❑Yes ❑No | ❑Yes ❑No | |
| 20 | | ❑Yes ❑No | ❑Yes ❑No | |

**Overall Site Issues**

*Below are some general site issues that should be assessed during inspections. Customize this list as needed for conditions at your site.*

| | BMP/activity | Implemented? | Maintenance Required? | Corrective Action Needed and Notes |
|---|---|---|---|---|
| 1 | Are all slopes and disturbed areas not actively being worked properly stabilized? | ❑Yes ❑No | ❑Yes ❑No | |

| | BMP/activity | Implemented? | Maintenance Required? | Corrective Action Needed and Notes |
|---|---|---|---|---|
| 2 | Are natural resource areas (e.g., streams, wetlands, mature trees, etc.) protected with barriers or similar BMPs? | ❑Yes ❑No | ❑Yes ❑No | |
| 3 | Are perimeter controls and sediment barriers adequately installed (keyed into substrate) and maintained? | ❑Yes ❑No | ❑Yes ❑No | |
| 4 | Are discharge points and receiving waters free of any sediment deposits? | ❑Yes ❑No | ❑Yes ❑No | |
| 5 | Are storm drain inlets properly protected? | ❑Yes ❑No | ❑Yes ❑No | |
| 6 | Is the construction exit preventing sediment from being tracked into the street? | ❑Yes ❑No | ❑Yes ❑No | |
| 7 | Is trash/litter from work areas collected and placed in covered dumpsters? | ❑Yes ❑No | ❑Yes ❑No | |
| 8 | Are washout facilities (e.g., paint, stucco, concrete) available, clearly marked, and maintained? | ❑Yes ❑No | ❑Yes ❑No | |
| 9 | Are vehicle and equipment fueling, cleaning, and maintenance areas free of spills, leaks, or any other deleterious material? | ❑Yes ❑No | ❑Yes ❑No | |
| 10 | Are materials that are potential storm water contaminants stored inside or under cover? | ❑Yes ❑No | ❑Yes ❑No | |
| 11 | Are non-storm water discharges (e.g., wash water, dewatering) properly controlled? | ❑Yes ❑No | ❑Yes ❑No | |
| 12 | (Other) | ❑Yes ❑No | ❑Yes ❑No | |

**Non-Compliance**

| Describe any incidents of non-compliance not described above: |
| --- |
| |

## CONTRACTOR'S CERTIFICATION STATEMENT

"I certify under penalty of law that this document and all attachments were prepared under my direction or supervision in accordance with a system designed to assure that qualified personnel properly gathered and evaluated the information submitted. Based on my inquiry of the person or persons who manage the system, or those persons directly responsible for gathering the information, the information submitted is, to the best of my knowledge and belief, true, accurate, and complete. I am aware that there are significant penalties for submitting false information, including the possibility of fine and imprisonment for knowing violations."

**Print name and title:**

_____

**Signature:** _____

**Date:** _____

## HARRIS COUNTY'S CERTIFICATION STATEMENT

"I certify that I have inspected the project site and have observed that all deficiencies, as noted above, have been corrected on or prior to the following date _____."

**Print name and title:**

_____

**Signature:** _____

# APPENDIX B
# DRAWINGS & STANDARD SWPPP DETAILS

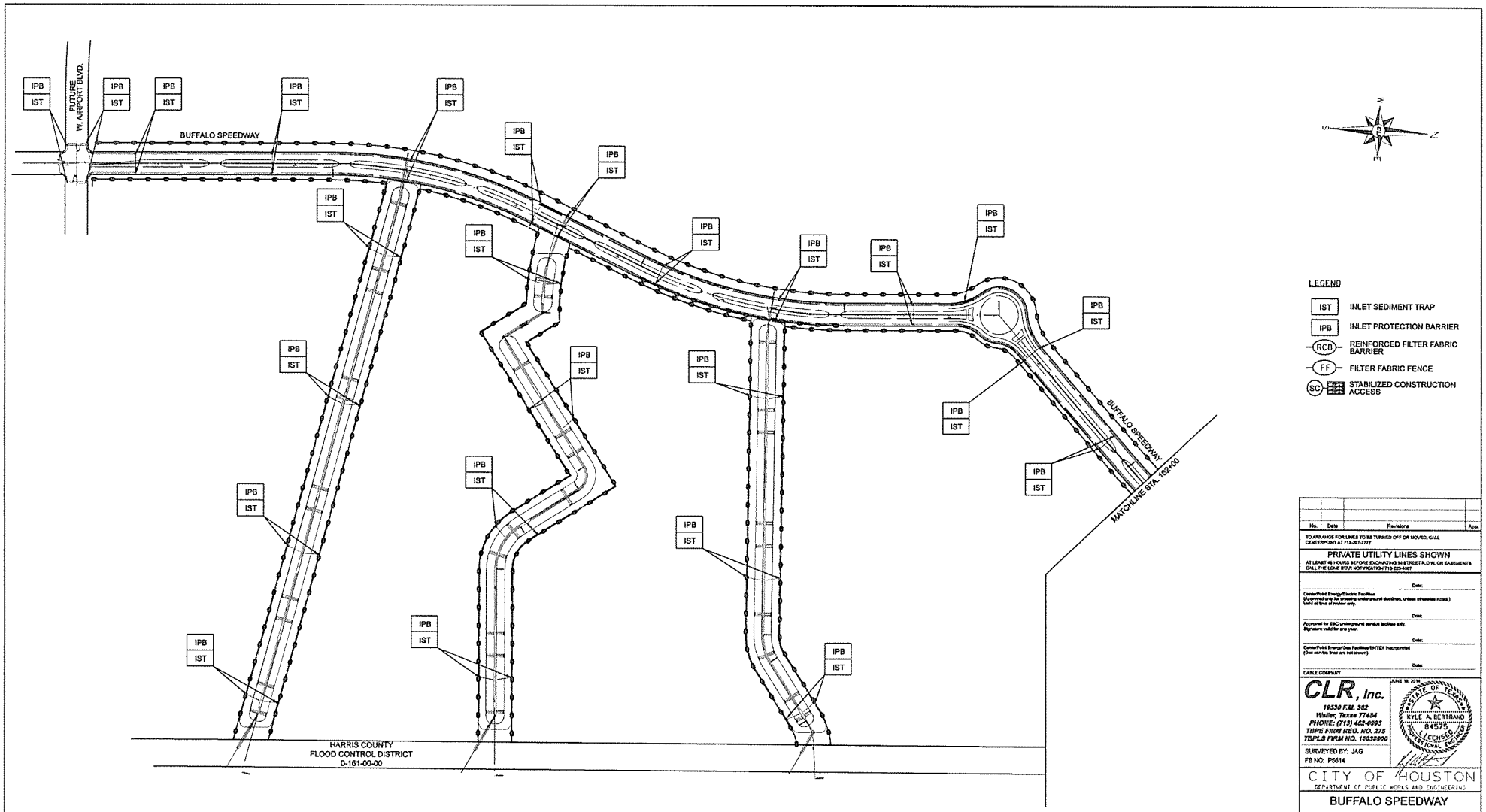


| No. | Date | Revisions | Apr. |
|---|---|---|---|

TO ARRANGE FOR LINES TO BE TURNED OFF OR MOVED, CALL CENTERPOINT AT 713-207-7777.

PRIVATE UTILITY LINES SHOWN

AT LEAST 48 HOURS BEFORE EXCAVATING IN STREET R.O.W. OR EASEMENTS CALL THE LONE STAR NOTIFICATION 713-223-4567

Date:

CenterPoint Energy/Electric Facilities
(Approved only for showing underground ductlines, unless otherwise noted.)
Valid at time of review only.

Date:

Approved for ENC underground conduit facilities only
Signature valid for one year.

Date:

CenterPoint Energy/Gas Facilities/ENTEX Incorporated
(Gas service lines are not shown)

Date:

CABLE COMPANY


**CLR, Inc.**
18530 F.M. 362
Waller, Texas 77484
PHONE: (713) 462-0993
TBPE FIRM REG. NO. 275
TBPLS FIRM NO. 10039900


JUNE 18, 2014
STATE OF TEXAS
KYLE A. BERTRAND
84575
LICENSED
PROFESSIONAL ENGINEER

SURVEYED BY: JAG
FB NO: P5614

CITY OF HOUSTON
DEPARTMENT OF PUBLIC WORKS AND ENGINEERING

# BUFFALO SPEEDWAY

## STORM WATER POLLUTION PREVENTION PLAN

| WBS NUMBER | FOR CITY OF HOUSTON USE ONLY |
|---|---|
| N-000784-0001-4 | |
| DRAWING SCALE | |
| 1" = 200' H | |
| CITY OF HOUSTON PM | |
| STEPHEN CAMPAGNA | |
| SHEET NO.145 OF 161 | |

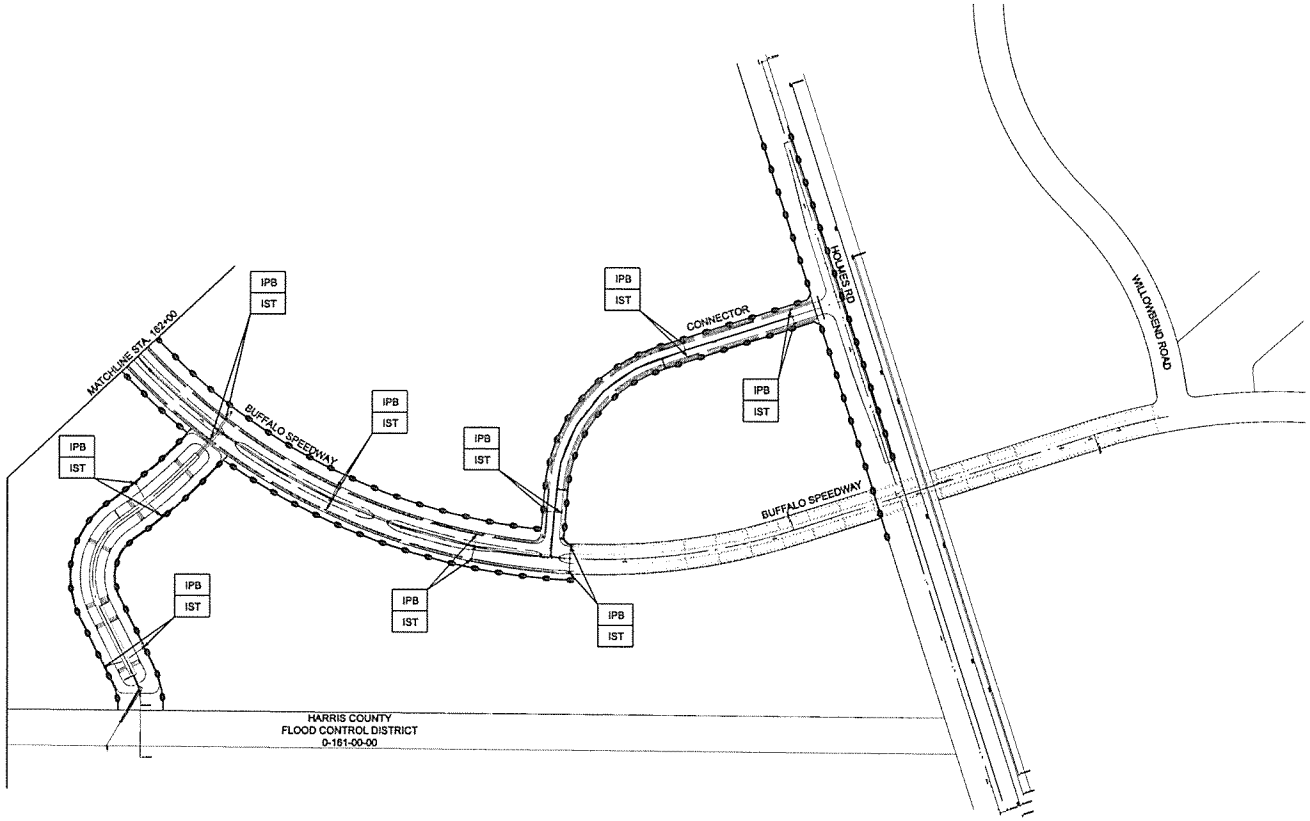


LEGEND

- IST — INLET SEDIMENT TRAP
- IPB — INLET PROTECTION BARRIER
- RCB — REINFORCED FILTER FABRIC BARRIER
- FF — FILTER FABRIC FENCE
- SC — STABILIZED CONSTRUCTION ACCESS

| No. | Date | Revisions | App. |
|---|---|---|---|

TO ARRANGE FOR LINES TO BE TURNED OFF OR MOVED, CALL CENTERPOINT AT 713-207-7777.

PRIVATE UTILITY LINES SHOWN

AT LEAST 48 HOURS BEFORE EXCAVATING IN STREET R.O.W. OR EASEMENTS CALL THE LONE STAR NOTIFICATION 713-223-4087

Date:

CenterPoint Energy/Electric Facilities
(Approved only for crossing underground ductlines, unless otherwise noted.)
Valid at time of review only.

Date:

Approved for SSC underground conduit facilities only.
Signature valid for one year.

Date:

CenterPoint Energy/Gas Facilities/ENTEX Incorporated
(Gas service lines are not shown)

Date:

CABLE COMPANY


**CLR, Inc.**
19530 F.M. 362
Waller, Texas 77484
PHONE: (713) 462-0993
TBPE FIRM REG. NO. 275
TBPLS FIRM NO. 10038900


JUNE 16, 2014

STATE OF TEXAS
KYLE A. BERTRAND
64575
LICENSED PROFESSIONAL ENGINEER

SURVEYED BY: JAG
FB NO: P5614

CITY OF HOUSTON
DEPARTMENT OF PUBLIC WORKS AND ENGINEERING

# BUFFALO SPEEDWAY

## STORM WATER POLLUTION PREVENTION PLAN

| WBS NUMBER | FOR CITY OF HOUSTON USE ONLY |
|---|---|
| N-000754-0001-4 | |
| DRAWING SCALE | |
| 1" = 200' H | |
| CITY OF HOUSTON PM | |
| STEPHEN CAMPAGNA | |
| SHEET NO.147 OF 161 | |

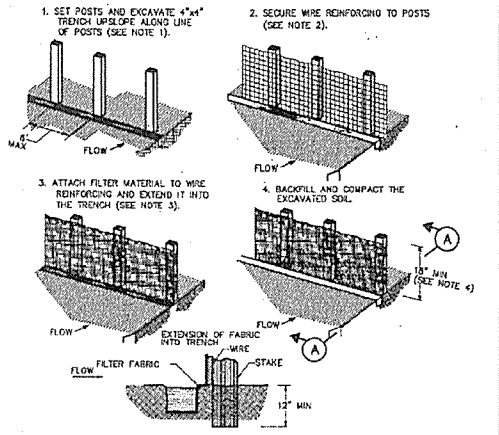


## CONSTRUCTION NOTES:

1. SET 2 INCH BY 2 INCH WOODEN STAKES SPACED A MAX OF 6 FEET APART AND EMBEDDED A MIN OF 12 INCHES.
2. WOVEN WIRE REINFORCING TO BE FASTENED SECURELY TO BARRIER POSTS WITH STAPLES.
3. FILTER CLOTH TO BE FASTENED SECURELY TO WOVEN WIRE REINFORCING, WITH TIES SPACED EVERY 24 INCHES AT TOP AND MIDSECTION.
4. MINIMUM HEIGHT OF FILTER SHOULD BE 18 INCHES AND A MAXIMUM OF 36 INCHES ABOVE NATURAL GROUND.
5. WHEN TWO SECTIONS OF FILTER CLOTH ADJOIN EACH OTHER THEY SHALL BE OVERLAPPED 6 INCHES AT THE POSTS, AND FOLDED.
6. SEE COH STANDARD SPECIFICATION FOR FILTER FABRIC BARRIER.

X—(RFB)—X
SYMBOL

## REINFORCED FILTER FABRIC BARRIER

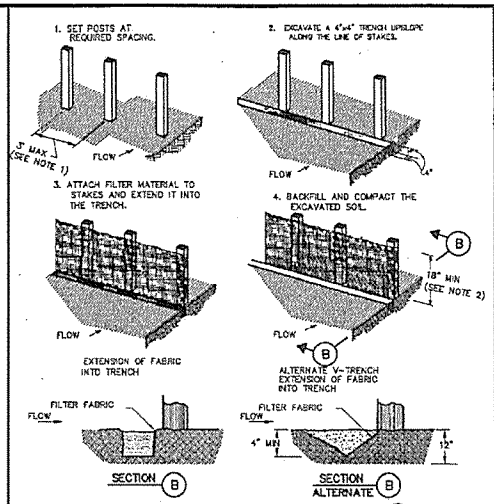


X—(FF)—X
SYMBOL

## CONSTRUCTION NOTES:

1. 2 INCH THICK BY 2 INCH WOODEN STAKES TO BE SET AT MAX SPACING OF 3 FEET AND EMBEDDED A MIN OF 8 INCHES. IF PREASSEMBLED BARRIER WITH SUPPORT NETTING IS USED, SPACING OF POST MAY BE INCREASED TO 8 FEET MAX.
2. ATTACH FILTER FABRIC TO WOODEN STAKES. FILTER FABRIC BARRIER SHALL HAVE A MIN HEIGHT OF 18 INCHES AND MAX HEIGHT OF 36 INCHES ABOVE NATURAL GROUND.
3. WHEN TWO SECTIONS OF FILTER CLOTH ADJOIN EACH OTHER THEY SHOULD BE OVERLAPPED 6 INCHES AT THE POSTS, AND FOLDED.
4. SEE COH STANDARD SPECIFICATION FOR FILTER FABRIC BARRIER.

## FILTER FABRIC BARRIER

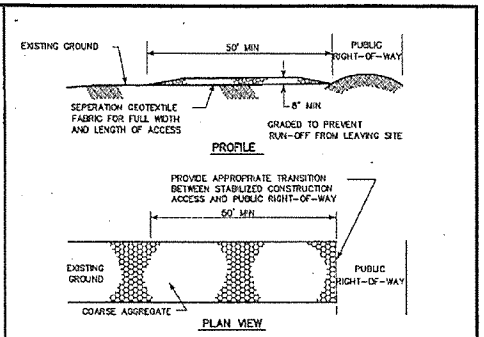


## CONSTRUCTION NOTES:

1. LENGTH SHALL BE AS SHOWN ON THE CONSTRUCTION DRAWINGS, BUT NOT LESS THAN 50 FEET.
2. THICKNESS SHALL BE NOT LESS THAN 8 INCHES.
3. WIDTH SHALL BE NOT LESS THAN FULL WIDTH OF ALL POINTS OF INGRESS OR EGRESS.
4. STABILIZATION FOR OTHER AREAS SHALL HAVE THE SAME AGGREGATE THICKNESS AND WIDTH REQUIREMENTS AS THE STABILIZED CONSTRUCTION ACCESS, UNLESS OTHERWISE SHOWN ON THE CONSTRUCTION DRAWINGS.
5. STABILIZED AREA MAY BE WIDENED OR LENGTHENED TO ACCOMODATE A WASHING AREA. AN OUTLET SEDIMENT TRAP MUST BE PROVIDED FOR THE WASHING AREA.
6. COH STANDARD SPECIFICATION FOR STABILIZED CONSTRUCTION ACCESS.
7. STABILIZED CONSTRUCTION ACCESS SHALL BE MAINTAINED FREE OF SEDIMENT FOR THE DURATION OF THE PROJECT.

(SC)
SYMBOL

## STABILIZED CONSTRUCTION ACCESS

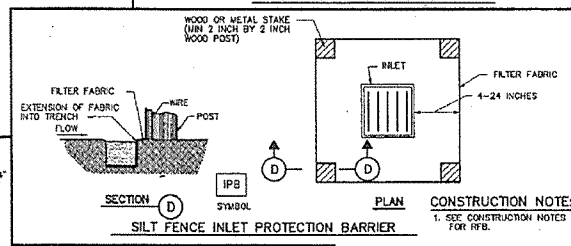


## SILT FENCE INLET PROTECTION BARRIER

## CONSTRUCTION NOTE:

1. SEE CONSTRUCTION NOTES FOR RFB.

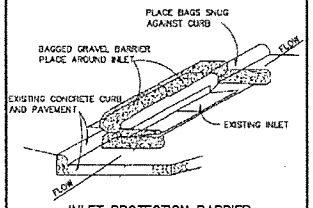


## INLET PROTECTION BARRIER

(FOR STAGE II INLETS)
BAGGED GRAVEL BARRIER

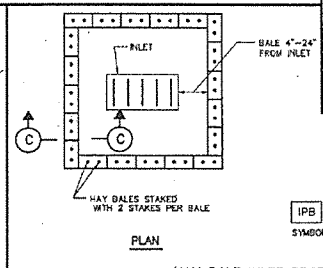


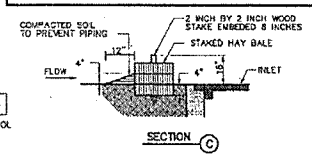


## HAY BALE INLET PROTECTION BARRIER

| No. | Date | Revisions | App. |
|---|---|---|---|
| | | | |

CLR, Inc.
19530 F.M. 362
Waller, Texas 77484
PHONE: (713) 462-0893
TBPE FIRM REG. NO. 275

SURVEYED BY: JAG
FB NO: P5614

6-16-14

CITY OF HOUSTON
DEPARTMENT OF PUBLIC WORKS AND ENGINEERING

BUFFALO SPEEDWAY EXTENTION
STORM WATER POLLUTION PREVENTION PLAN DETAILS

CITY OF HOUSTON
DEPARTMENT OF PUBLIC WORKS AND ENGINEERING

STORM WATER POLLUTION PREVENTION PLAN DETAILS
(NOT TO SCALE)

APPROVED: CITY ENGINEER
DIRECTOR OF PUBLIC WORKS AND ENGINEERING

EFF DATE: JULY-01-2010
DWG NO: 01571-01

| | |
|---|---|
| WBS NUMBER | N-000784-0001-4 |
| DRAWING SCALE | NTS |
| CITY OF HOUSTON PM | STEPHEN CAMPAGNA PE |
| SHEET NO. 148 OF 161 | |

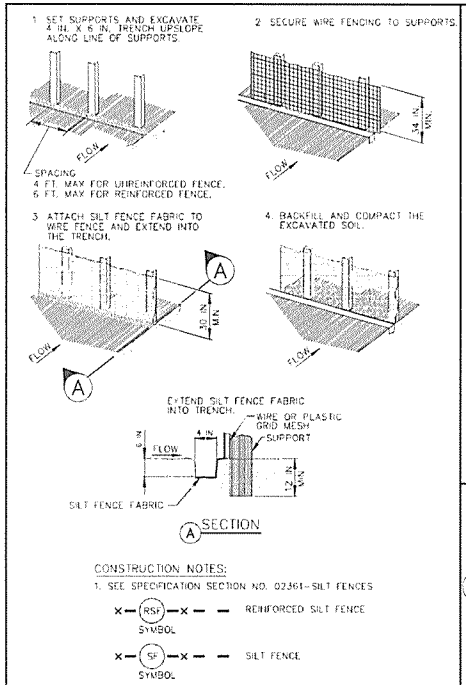


A SECTION

CONSTRUCTION NOTES:

1. SEE SPECIFICATION SECTION NO. 02361–SILT FENCES

RSF SYMBOL — REINFORCED SILT FENCE

SF SYMBOL — SILT FENCE

## SILT FENCE

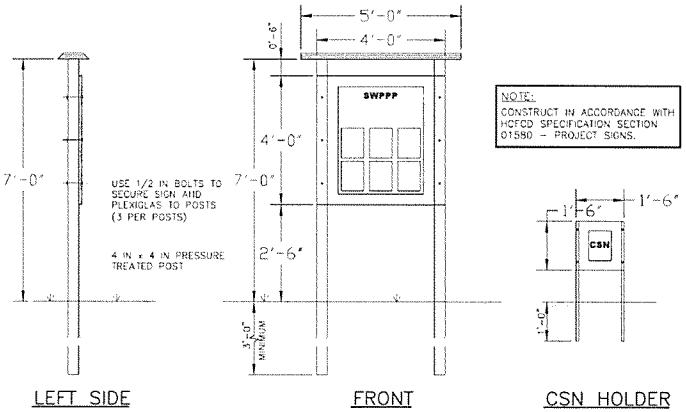


NOTE:
CONSTRUCT IN ACCORDANCE WITH HCFCD SPECIFICATION SECTION 01590 – PROJECT SIGNS.

## SWPPP / BMP SIGN AND CONSTRUCTION SITE NOTICE HOLDER DETAILS

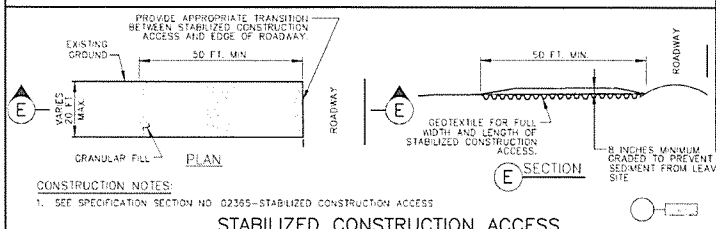


CONSTRUCTION NOTES:

1. SEE SPECIFICATION SECTION NO. 02365–STABILIZED CONSTRUCTION ACCESS

## STABILIZED CONSTRUCTION ACCESS

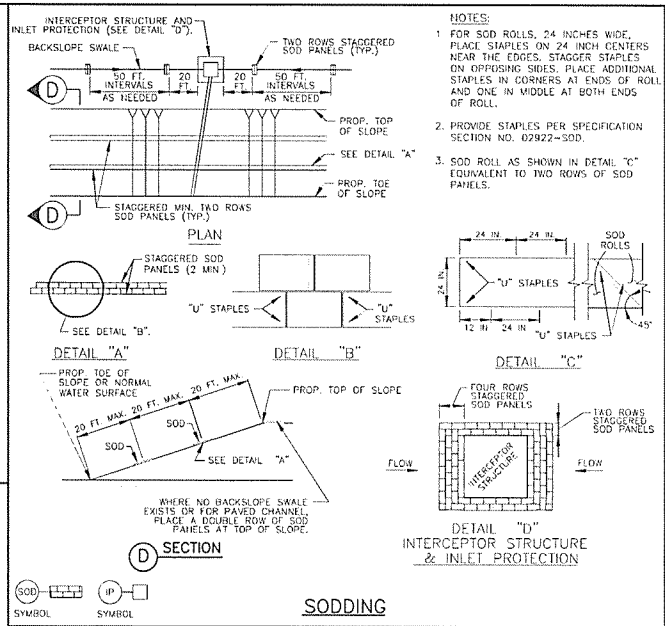


NOTES:

1. FOR SOD ROLLS, 24 INCHES WIDE, PLACE STAPLES ON 24 INCH CENTERS NEAR THE EDGES. STAGGER STAPLES ON OPPOSING SIDES. PLACE ADDITIONAL STAPLES IN CORNERS AT ENDS OF ROLL AND ONE IN MIDDLE AT BOTH ENDS OF ROLL.
2. PROVIDE STAPLES PER SPECIFICATION SECTION NO. 02922–SOD.
3. SOD ROLL AS SHOWN IN DETAIL "C" EQUIVALENT TO TWO ROWS OF SOD PANELS.

## SODDING

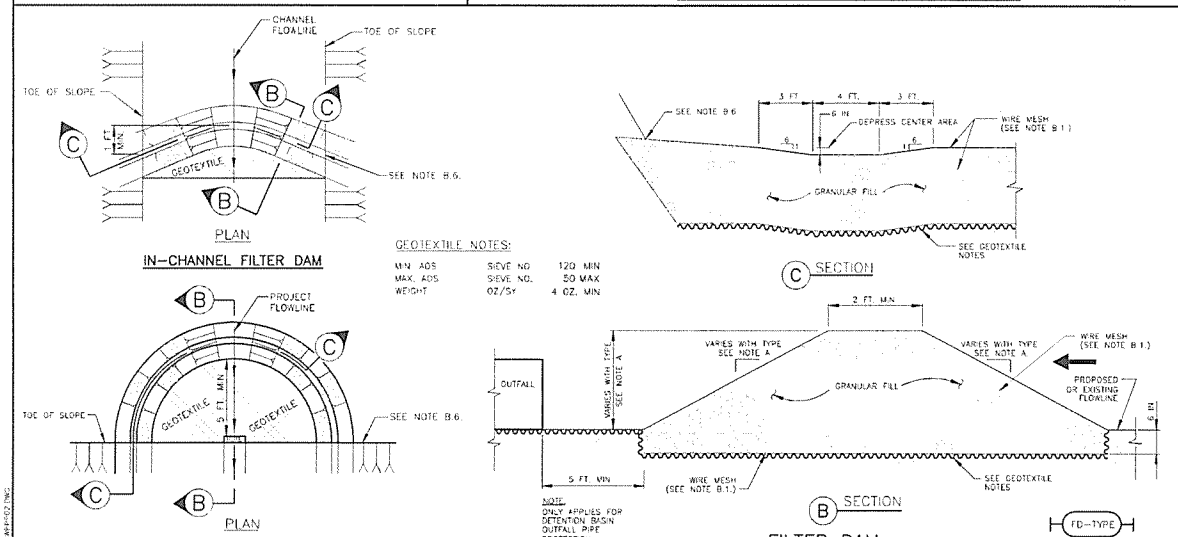


GEOTEXTILE NOTES:

| | | |
|---|---|---|
| MIN. AOS | SIEVE NO. | 120 MIN |
| MAX. AOS | SIEVE NO. | 50 MAX |
| WEIGHT | OZ/SY | 4 OZ. MIN |

NOTE:
ONLY APPLIES FOR DETENTION BASIN OUTFALL PIPE PROTECTION.

## FILTER DAM

FILTER DAM NOTES:

A. TYPES OF FILTER DAMS
1. TYPE 1 (NON–REINFORCED)
   a. HEIGHT – 18–24 INCHES. MEASURE VERTICALLY FROM EXISTING GROUND TO TOP OF FILTER DAM
   b. TOP WIDTH – 2 FEET (MINIMUM)
   c. SLOPES – 2:1 (MAXIMUM).
2. TYPE 2 (REINFORCED).
   a. HEIGHT – 18–36 INCHES. MEASURE VERTICALLY FROM EXISTING GROUND TO TOP OF FILTER DAM
   b. TOP WIDTH – 2 FEET (MINIMUM).
   c. SLOPES – 2:1 (MAXIMUM)
3. TYPE 3 (REINFORCED)
   a. HEIGHT – 36–48 INCHES. MEASURE VERTICALLY FROM EXISTING GROUND TO TOP OF FILTER DAM.
   b. TOP WIDTH – 2 FEET (MINIMUM).
   c. SLOPES – 3:1 (MAXIMUM).
4. TYPE 4 (GABION)
   a. HEIGHT – 30 INCHES (MINIMUM). MEASURE VERTICALLY FROM EXISTING GROUND TO TOP OF FILTER DAM.
   b. TOP WIDTH – 2 FEET (MINIMUM)
5. TYPE 5. AS SHOWN ON THE PLANS.

B. CONSTRUCT FILTER DAMS ACCORDING TO THE FOLLOWING CRITERIA UNLESS SHOWN OTHERWISE ON THE PLANS.
1. TYPE 2 AND 3 FILTER DAMS: SECURE WITH 20 GAUGE GALVANIZED WOVEN WIRE MESH WITH 1 INCH DIAMETER HEXAGONAL OPENINGS.
2. GRANULAR FILL:
   a. PLACE ON MESH TO HEIGHT AND SLOPES SHOWN ON PLANS OR AS SPECIFIED BY THE ENGINEER.
   b. 3–5 INCHES FOR ROCK FILTER DAM TYPES 1,2, AND 4 AND 4–8 INCHES FOR ROCK FILTER DAM TYPE 3. REFER TO GRANULAR FILL IN SPECIFICATION SECTION NO. 02378–RIPRAP AND GRANULAR FILL.
3. WIRE MESH: FOLD AT UPSTREAM SIDE OVER GRANULAR FILL AND TIGHTLY SECURE TO ITSELF ON THE DOWNSTREAM SIDE USING WIRE TIES OR HOG RINGS.
4. IN STREAMS: SECURE OR STAKE MESH TO STREAM BED PRIOR TO AGGREGATE PLACEMENT.
5. SEE SPECIFICATION SECTION NO. 02364–FILTER DAMS.
6. EMBED ONE FOOT MINIMUM INTO SLOPE AND AT SLOPE RAISE ONE FOOT HIGHER THAN CENTER OF DEPRESSED AREA.

THIS DETAIL SHEET HAS BEEN PREPARED FOR USE ON HCFCD PROJECTS OR PROJECTS TO BE MAINTAINED BY THE HCFCD WHEN COMPLETED BY OTHERS. AN ENGINEER WHO INCORPORATES THE DETAILS ON THIS SHEET BECOMES RESPONSIBLE FOR ITS USE IN THE END PRODUCT IN ACCORDANCE WITH RULE §137.33 (b) AND (c) OF THE TEXAS STATE BOARD OF REGISTRATION FOR PROFESSIONAL ENGINEERS

STATE OF TEXAS — JOHN P. PEYTON — 67846 — REGISTERED PROFESSIONAL ENGINEER

6-16-2014

P.E. SEAL AND SIGNATURE

| REV | DESCRIPTION | DATE | APPR |
|---|---|---|---|
| | | | |

PROJECT ID#

BUFFALO SPEEDWAY EXTENTION

STORMWATER POLLUTION PREVENTION DETAILS

PREPARED:

CHECKED:

APPROVED:

CLR, Inc. Tx Firm Reg. No. 275 — Engineers • Surveyors • Planners — 6575 West Loop South, Suite 625, Houston, Texas 77401 — Phone: (713) 662-4567 Fax: (713) 662-4216

Harris County Flood Control District
9900 Northwest Freeway
Houston, Texas 77092

DATE: 08–31–05
SCALE: NTS

SHEET NUMBER
149 OF 161

# APPENDIX C
# GENERAL PERMIT NO. TXR 150000

TCEQ Docket No. 2007-1588-WQ
TPDES General Permit No. TXR150000

**TEXAS COMMISSION ON ENVIRONMENTAL QUALITY**
P.O. BOX 13087
Austin, TX 78711-3087

This is a renewal of TPDES General Permit No. TXR150000, issued March 5, 2003.

GENERAL PERMIT TO DISCHARGE WASTES
under provisions of
Section 402 of the Clean Water Act
and Chapter 26 of the Texas Water Code

Construction sites that discharge storm water associated with construction activity

located in the state of Texas

may discharge to surface water in the state

only according to effluent limitations, monitoring requirements and other conditions set forth in this permit, as well as the rules of the Texas Commission on Environmental Quality (TCEQ), the laws of the State of Texas, and other orders of the TCEQ. The issuance of this general permit does not grant to the permittee the right to use private or public property for conveyance of storm water and certain non-storm water discharges along the discharge route. This includes property belonging to but not limited to any individual, partnership, corporation or other entity. Neither does this permit authorize any invasion of personal rights nor any violation of federal, state, or local laws or regulations. It is the responsibility of the permittee to acquire property rights as may be necessary to use the discharge route.

This permit and the authorization contained herein shall expire at midnight on March 5, 2013.

EFFECTIVE DATE: March 5, 2008

ISSUED DATE: FEB 15 2008

Buddy Garcia
For the Commission

# TPDES GENERAL PERMIT NUMBER TXR150000 RELATING TO STORM WATER DISCHARGES ASSOCIATED WITH CONSTRUCTION ACTIVITIES

**Table of Contents**

Part I. Flow Chart and Definitions....Page 3

Part II. Permit Applicability and Coverage....Page 10

Part III. Storm Water Pollution Prevention Plans....Page 25

Part IV. Storm Water Runoff from Concrete Batch Plants....Page 37

Part V. Concrete Truck Wash Out Requirements....Page 42

Part VI. Retention of Records....Page 42

Part VII. Standard Permit Conditions....Page 43

Part VIII. Fees....Page 44

Appendix A. Automatic Authorization - Periods of Low Erosion Potential by County....Page 45

Appendix B. Erosivity Index (EI) Zones in Texas....Page 46

Appendix C. Isoerodent Map....Page 47

Appendix D. Erosivity Indices for EI Zones in Texas....Page 48

Attachment 1. Small Construction Site Notice: Low Potential for Erosion....Page 49

Attachment 2. Small Construction Site Notice....Page 50

Attachment 3. Large Construction Site Notice: "Secondary Operator" Notice....Page 51

Attachment 4. Large Construction Site Notice: "Primary Operator" Notice....Page 52

## Part I. Flow Chart and Definitions

### Section A. Flow Chart to Determine Whether Coverage is Required

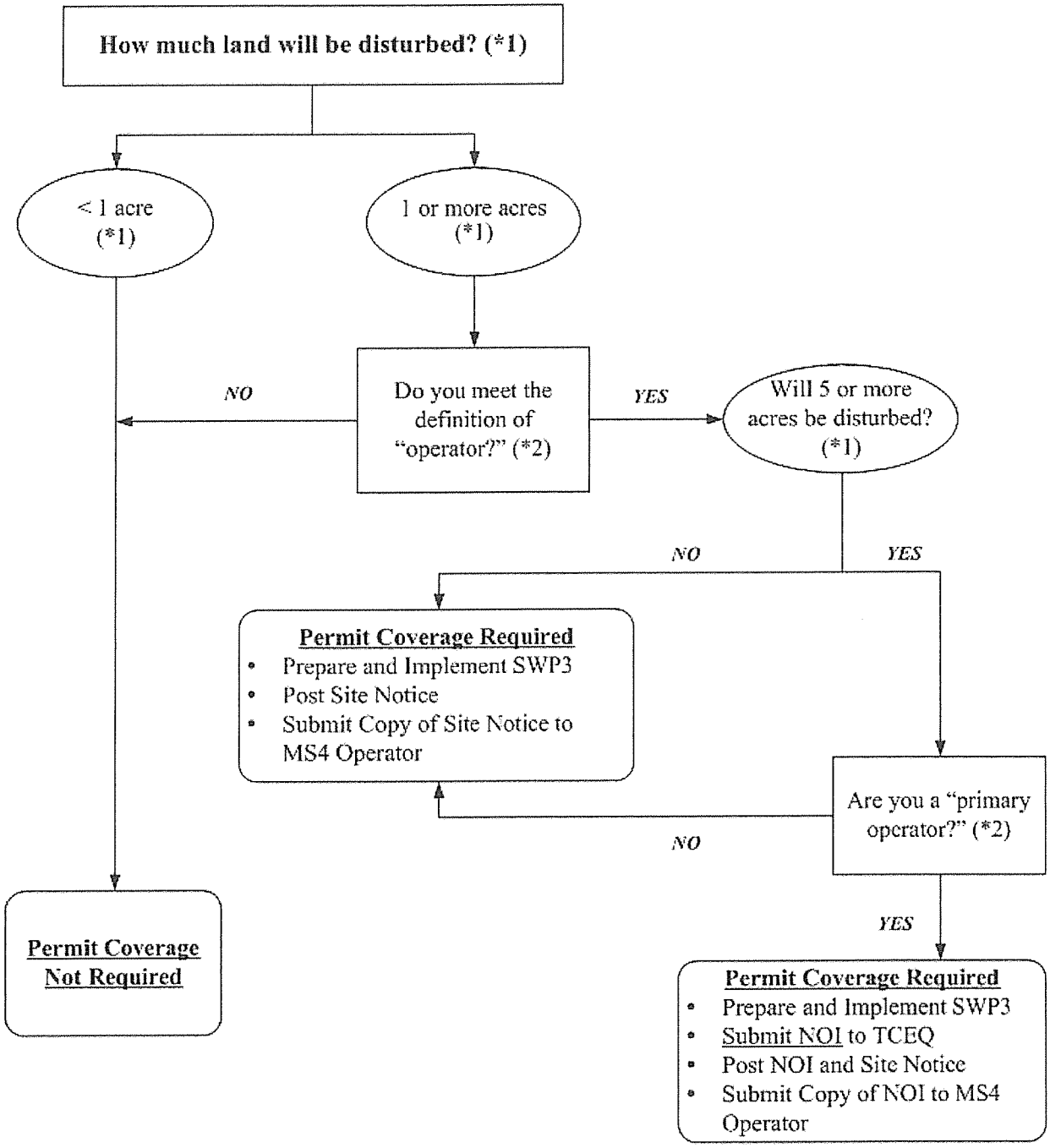


*(*1) To determine the size of the construction project, use the size of the entire area to be disturbed, and include the size of the larger common plan of development or sale, if the project is part of a larger project (refer to Part I.B., "Definitions," for an explanation of "larger common plan of development or sale").*

*(*2) Refer to the definitions for "operator," "primary operator," and "secondary operator" in Part I., Section B. of this permit.*

**Section B. Definitions**

**Arid Areas** - Areas with an average annual rainfall of 0 to 10 inches.

**Best Management Practices (BMPs)** - Schedules of activities, prohibitions of practices, maintenance procedures, structural controls, local ordinances, and other management practices to prevent or reduce the discharge of pollutants. BMPs also include treatment requirements, operating procedures, and practices to control construction site runoff, spills or leaks, waste disposal, or drainage from raw material storage areas.

**Commencement of Construction** - The initial disturbance of soils associated with clearing, grading, or excavation activities, as well as other construction-related activities (e.g., stockpiling of fill material, demolition)

**Common Plan of Development** - A construction activity that is completed in separate stages, separate phases, or in combination with other construction activities. A common plan of development (also known as a "common plan of development or sale") is identified by the documentation for the construction project that identifies the scope of the project, and may include plats, blueprints, marketing plans, contracts, building permits, a public notice or hearing, zoning requests, or other similar documentation and activities. A common plan of development does not necessarily include all construction projects within the jurisdiction of a public entity (e.g., a city or university). Construction of roads or buildings in different parts of the jurisdiction would be considered separate "common plans," with only the interconnected parts of a project being considered part of a "common plan" (e.g., a building and its associated parking lot and driveways, airport runway and associated taxiways, a building complex, etc.). Where discrete construction projects occur within a larger common plan of development or sale but are located ¼ mile or more apart, and the area between the projects is not being disturbed, each individual project can be treated as a separate plan of development or sale, provided that any interconnecting road, pipeline or utility project that is part of the same "common plan" is not included in the area to be disturbed.

**Discharge** – For the purposes of this permit, the drainage, release, or disposal of pollutants in storm water and certain non-storm water from areas where soil disturbing activities (e.g., clearing, grading, excavation, stockpiling of fill material, and demolition), construction materials or equipment storage or maintenance (e.g., fill piles, borrow area, concrete truck washout, fueling), or other industrial storm water directly related to the construction process (e.g., concrete or asphalt batch plants) are located.

**Edwards Aquifer** - As defined under Texas Administrative Code § 213.3 of this title (relating to the Edwards Aquifer), that portion of an arcuate belt of porous, water-bearing, predominantly carbonate rocks known as the Edwards and Associated Limestones in the Balcones Fault Zone trending from west to east to northeast in Kinney, Uvalde, Medina, Bexar, Comal, Hays, Travis, and Williamson Counties; and composed of the Salmon Peak Limestone, McKnight Formation, West Nueces Formation, Devil's River Limestone, Person Formation, Kainer Formation, Edwards Formation, and Georgetown Formation. The permeable aquifer units generally overlie the less-permeable Glen Rose Formation to the south, overlie the less-permeable Comanche Peak and Walnut Formations north of the Colorado River, and underlie the less-permeable Del Rio Clay regionally.

**Edwards Aquifer Recharge Zone** - Generally, that area where the stratigraphic units constituting the Edwards Aquifer crop out, including the outcrops of other geologic formations in proximity to the Edwards Aquifer, where caves, sinkholes, faults, fractures, or other permeable features would create a potential for recharge of surface waters into the Edwards Aquifer. The recharge zone is identified as that area designated as such on official maps located in the offices of the Texas Commission on Environmental Quality and the

appropriate regional office. The Edwards Aquifer Map Viewer, located at http://www.tceq.state.tx.us/compliance/field_ops/eapp/mapdisclaimer.html, can be used to determine where the recharge zone is located.

**Edwards Aquifer Contributing Zone** - The area or watershed where runoff from precipitation flows downgradient to the recharge zone of the Edwards Aquifer. The contributing zone is located upstream (upgradient) and generally north and northwest of the recharge zone for the following counties: all areas within Kinney County, except the area within the watershed draining to Segment 2304 of the Rio Grande Basin; all areas within Uvalde, Medina, Bexar, and Comal Counties; all areas within Hays and Travis Counties, except the area within the watersheds draining to the Colorado River above a point 1.3 miles upstream from Tom Miller Dam, Lake Austin at the confluence of Barrow Brook Cove, Segment 1403 of the Colorado River Basin; and all areas within Williamson County, except the area within the watersheds draining to the Lampasas River above the dam at Stillhouse Hollow reservoir, Segment 1216 of the Brazos River Basin. The contributing zone is illustrated on the Edwards Aquifer map viewer at http://www.tceq.state.tx.us/compliance/field_ops/eapp/mapdisclaimer.html.

**Facility or Activity** – For the purpose of this permit, a construction site or construction support activity that is regulated under this general permit, including all contiguous land and fixtures (e.g., ponds and materials stockpiles), structures, or appurtances used at a construction site or industrial site described by this general permit.

**Final Stabilization** - A construction site status where any of the following conditions are met:

(a) All soil disturbing activities at the site have been completed and a uniform (i.e., evenly distributed, without large bare areas) perennial vegetative cover with a density of at least 70% of the native background vegetative cover for the area has been established on all unpaved areas and areas not covered by permanent structures, or equivalent permanent stabilization measures (such as the use of riprap, gabions, or geotextiles) have been employed.

(b) For individual lots in a residential construction site by either:

(1) the homebuilder completing final stabilization as specified in condition (a) above; or

(2) the homebuilder establishing temporary stabilization for an individual lot prior to the time of transfer of the ownership of the home to the buyer and after informing the homeowner of the need for, and benefits of, final stabilization. If temporary stabilization is not feasible, then the homebuilder may fulfill this requirement by retaining perimeter controls or other best management practices, and informing the homeowner of the need for removal of temporary controls and the establishment of final stabilization.

(c) For construction activities on land used for agricultural purposes (e.g. pipelines across crop or range land), final stabilization may be accomplished by returning the disturbed land to its preconstruction agricultural use. Areas disturbed that were not previously used for agricultural activities, such as buffer strips immediately adjacent to surface water and areas that are not being returned to their preconstruction agricultural use must meet the final stabilization conditions of condition (a) above.

(d) In arid, semi-arid, and drought-stricken areas only, all soil disturbing activities at the site have been completed and both of the following criteria have been met:

(1) Temporary erosion control measures (e.g., degradable rolled erosion control product) are selected, designed, and installed along with an appropriate seed base to provide erosion control for at least three years without active maintenance by the operator, and

(2) The temporary erosion control measures are selected, designed, and installed to achieve 70 percent vegetative coverage within three years.

**Hyperchlorination of Waterlines** – Treatment of potable water lines or tanks with chlorine for disinfection purposes, typically following repair or partial replacement of the waterline or tank, and subsequently flushing the contents.

**Indian Country Land** – (from 40 CFR 122.2) (1) all land within the limits of any Indian reservation under the jurisdiction of the United States government, notwithstanding the issuance of any patent, and, including rights-of-way running through the reservation; (2) all dependent Indian communities with the borders of the United States whether within the originally or subsequently acquired territory thereof, and whether within or without the limits of a state; and (3) all Indian allotments, the Indian titles to which have not been extinguished, including rights-of-way running through the same.

**Indian Tribe** - (from 40 CFR 122.2) any Indian Tribe, band, group, or community recognized by the Secretary of the Interior and exercising governmental authority over a Federal Indian Reservation.

**Large Construction Activity** - Construction activities including clearing, grading, and excavating that result in land disturbance of equal to or greater than five (5) acres of land. Large construction activity also includes the disturbance of less than five (5) acres of total land area that is part of a larger common plan of development or sale if the larger common plan will ultimately disturb equal to or greater than five (5) acres of land. Large construction activity does not include routine maintenance that is performed to maintain the original line and grade, hydraulic capacity, or original purpose of the site (e.g., the routine grading of existing dirt roads, asphalt overlays of existing roads, the routine clearing of existing right-of-ways, and similar maintenance activities.)

**Municipal Separate Storm Sewer System (MS4)** - A separate storm sewer system owned or operated by the United States, a state, city, town, county, district, association, or other public body (created by or pursuant to state law) having jurisdiction over the disposal of sewage, industrial wastes, storm water, or other wastes, including special districts under state law such as a sewer district, flood control or drainage district, or similar entity, or an Indian tribe or an authorized Indian tribal organization, that discharges to surface water in the state.

**Notice of Change (NOC)** – Written notification to the executive director from a discharger authorized under this permit, providing changes to information that was previously provided to the agency in a notice of intent form.

**Notice of Intent (NOI)** - A written submission to the executive director from an applicant requesting coverage under this general permit.

**Notice of Termination (NOT)** - A written submission to the executive director from a discharger authorized under a general permit requesting termination of coverage.

**Operator** - The person or persons associated with a large or small construction activity that is either a primary or secondary operator as defined below:

**Primary Operator** – the person or persons associated with a large or small construction activity that meets either of the following two criteria:

(a) the person or persons have operational control over construction plans and specifications, including the ability to make modifications to those plans and specifications; or

(b) the person or persons have day-to-day operational control of those activities at a construction site that are necessary to ensure compliance with a storm water pollution prevention plan (SWP3) for the site or other permit conditions (e.g., they are authorized to direct workers at a site to carry out activities required by the SWP3 or comply with other permit conditions).

**Secondary Operator** – The person whose operational control is limited to the employment of other operators or to the ability to approve or disapprove changes to plans and specifications. A secondary operator is also defined as a primary operator and must comply with the permit requirements for primary operators if there are no other operators at the construction site.

**Outfall** - For the purpose of this permit, a point source at the point where storm water runoff associated with construction activity discharges to surface water in the state and does not include open conveyances connecting two municipal separate storm sewers, or pipes, tunnels, or other conveyances that connect segments of the same stream or other water of the U.S. and are used to convey waters of the U.S.

**Permittee** - An operator authorized under this general permit. The authorization may be gained through submission of a notice of intent, by waiver, or by meeting the requirements for automatic coverage to discharge storm water runoff and certain non-storm water discharges.

**Point Source** – (from 40 CFR §122.2) Any discernible, confined, and discrete conveyance, including but not limited to, any pipe, ditch, channel, tunnel, conduit, well, discrete fissure, container, rolling stock concentrated animal feeding operation, landfill leachate collection system, vessel or other floating craft from which pollutants are, or may be, discharged. This term does not include return flows from irrigated agriculture or agricultural storm water runoff.

**Pollutant** - Dredged spoil, solid waste, incinerator residue, sewage, garbage, sewage sludge, filter backwash, munitions, chemical wastes, biological materials, radioactive materials, heat, wrecked or discarded equipment, rock, sand, cellar dirt, and industrial, municipal, and agricultural waste discharged into any surface water in the state. The term "pollutant" does not include tail water or runoff water from irrigation or rainwater runoff from cultivated or uncultivated rangeland, pastureland, and farmland. For the purpose of this permit, the term "pollutant" includes sediment.

**Pollution** - (from Texas Water Code §26.001(14)) The alteration of the physical, thermal, chemical, or biological quality of, or the contamination of, any surface water in the state that renders the water harmful, detrimental, or injurious to humans, animal life, vegetation, or property or to public health, safety, or welfare, or impairs the usefulness or the public enjoyment of the water for any lawful or reasonable purpose.

**Rainfall Erosivity Factor (R factor)** - the total annual erosive potential that is due to climatic effects, and is part of the Revised Universal Soil Loss Equation (RUSLE).

**Semiarid Areas** - areas with an average annual rainfall of 10 to 20 inches

**Separate Storm Sewer System** - A conveyance or system of conveyances (including roads with drainage systems, streets, catch basins, curbs, gutters, ditches, man-made channels, or storm drains), designed or used for collecting or conveying storm water; that is not a combined sewer, and that is not part of a publicly owned treatment works (POTW).

**Small Construction Activity** - Construction activities including clearing, grading, and excavating that result in land disturbance of equal to or greater than one (1) acre and less than five (5) acres of land. Small construction activity also includes the disturbance of less than one (1) acre of total land area that is part of a larger common plan of development or sale if the larger common plan will ultimately disturb equal to or greater than one (1) and less than five (5) acres of land. Small construction activity does not include routine maintenance that is performed to maintain the original line and grade, hydraulic capacity, or original purpose of the site (e.g., the routine grading of existing dirt roads, asphalt overlays of existing roads, the routine clearing of existing right-of-ways, and similar maintenance activities.)

**Storm Water (or Storm Water Runoff)** - Rainfall runoff, snow melt runoff, and surface runoff and drainage.

**Storm Water Associated with Construction Activity** - Storm water runoff from a construction activity where soil disturbing activities (including clearing, grading, excavating) result in the disturbance of one (1) or more acres of total land area, or are part of a larger common plan of development or sale that will result in disturbance of one (1) or more acres of total land area.

**Structural Control (or Practice)** - A pollution prevention practice that requires the construction of a device, or the use of a device, to capture or prevent pollution in storm water runoff. Structural controls and practices may include but are not limited to: silt fences, earthen dikes, drainage swales, sediment traps, check dams, subsurface drains, storm drain inlet protection, rock outlet protection, reinforced soil retaining systems, gabions, and temporary or permanent sediment basins.

**Surface Water in the State** - Lakes, bays, ponds, impounding reservoirs, springs, rivers, streams, creeks, estuaries, wetlands, marshes, inlets, canals, the Gulf of Mexico inside the territorial limits of the state (from the mean high water mark (MHWM) out 10.36 miles into the Gulf), and all other bodies of surface water, natural or artificial, inland or coastal, fresh or salt, navigable or nonnavigable, and including the beds and banks of all water-courses and bodies of surface water, that are wholly or partially inside or bordering the state or subject to the jurisdiction of the state; except that waters in treatment systems which are authorized by state or federal law, regulation, or permit, and which are created for the purpose of waste treatment are not considered to be water in the state.

**Temporary Stabilization** - A condition where exposed soils or disturbed areas are provided a protective cover or other structural control to prevent the migration of pollutants. Temporary stabilization may include temporary seeding, geotextiles, mulches, and other techniques to reduce or eliminate erosion until either permanent stabilization can be achieved or until further construction activities take place.

**Waters of the United States** - (from 40 CFR, Part122, Section 2) Waters of the United States or waters of the U.S. means:

(a) all waters which are currently used, were used in the past, or may be susceptible to use in interstate or foreign commerce, including all waters which are subject to the ebb and flow of the tide;

(b) all interstate waters, including interstate wetlands;

(c) all other waters such as intrastate lakes, rivers, streams (including intermittent streams), mudflats, sandflats, wetlands, sloughs, prairie potholes, wet meadows, playa lakes, or natural ponds that the use, degradation, or destruction of which would affect or could affect interstate or foreign commerce including any such waters:

(1) which are or could be used by interstate or foreign travelers for recreational or other purposes;

(2) from which fish or shellfish are or could be taken and sold in interstate or foreign commerce; or

(3) which are used or could be used for industrial purposes by industries in interstate commerce;

(d) all impoundments of waters otherwise defined as waters of the United States under this definition;

(e) tributaries of waters identified in paragraphs (a) through (d) of this definition;

(f) the territorial sea; and

(g) wetlands adjacent to waters (other than waters that are themselves wetlands) identified in paragraphs (a) through (f) of this definition.

Waste treatment systems, including treatment ponds or lagoons designed to meet the requirements of CWA (other than cooling ponds as defined in 40 CFR §423.11(m) which also meet the criteria of this definition) are not waters of the United States. This exclusion applies only to manmade bodies of water which neither were originally created in waters of the United States (such as disposal area in wetlands) nor resulted from the impoundment of waters of the United States. Waters of the United States do not include prior converted cropland. Notwithstanding the determination of an area's status as prior converted cropland by any other federal agency, for the purposes of the Clean Water Act, the final authority regarding Clean Water Act jurisdiction remains with EPA.

## Part II. Permit Applicability and Coverage

### Section A. Discharges Eligible for Authorization

1. Storm Water Associated with Construction Activity

Discharges of storm water runoff from small and large construction activities may be authorized under this general permit.

2. Discharges of Storm Water Associated with Construction Support Activities

Examples of construction support activities include, but are not limited to, concrete batch plants, rock crushers, asphalt batch plants, equipment staging areas, material storage yards, material borrow areas, and excavated material disposal areas. Discharges of storm water runoff from construction support activities may be authorized under this general permit, provided that the following conditions are met:

(a) the activities are located within one (1)-mile from the boundary of the permitted construction site and directly support the construction activity;

(b) a storm water pollution prevention plan is developed according to the provisions of this general permit and includes appropriate controls and measures to reduce erosion and discharge of pollutants in storm water runoff from the construction support activities; and

(c) the construction support activities either do not operate beyond the completion date of the construction activity or are authorized under separate TPDES authorization. Separate TPDES authorization may include the TPDES Multi Sector General Permit, TXR050000 (related to storm water discharges associated with industrial activity), separate authorization under this general permit if applicable, coverage under an alternative general permit if available, or authorization under an individual water quality permit.

3. Non-Storm Water Discharges

The following non-storm water discharges from sites authorized under this general permit are also eligible for authorization under this general permit:

(a) discharges from fire fighting activities (fire fighting activities do not include washing of trucks, run-off water from training activities, test water from fire suppression systems, and similar activities);

(b) uncontaminated fire hydrant flushings (excluding discharges of hyperchlorinated water, unless the water is first dechlorinated and discharges are not expected to adversely affect aquatic life), which include flushings from systems that utilize potable water, surface water, or groundwater that does not contain additional pollutants (uncontaminated fire hydrant flushings do not include systems utilizing reclaimed wastewater as a source water);

(c) water from the routine external washing of vehicles, the external portion of buildings or structures, and pavement, where detergents and soaps are not used and where spills or leaks of toxic or hazardous materials have not occurred (unless spilled materials have been removed; and if local state, or federal regulations are applicable, the materials are removed according to those regulations), and where the purpose is to remove mud, dirt, or dust;

(d) uncontaminated water used to control dust;

(e) potable water sources including waterline flushings (excluding discharges of hyperchlorinated water, unless the water is first dechlorinated and discharges are not expected to adversely affect aquatic life);

(f) uncontaminated air conditioning condensate;

(g) uncontaminated ground water or spring water, including foundation or footing drains where flows are not contaminated with industrial materials such as solvents; and

(h) lawn watering and similar irrigation drainage.

4. Other Permitted Discharges

Any discharge authorized under a separate NPDES, TPDES, or TCEQ permit may be combined with discharges authorized by this general permit, provided those discharges comply with the associated permit.

**Section B. Concrete Truck Wash Out**

The washout of concrete trucks associated with off-site production facilities may be conducted at regulated construction sites in accordance with the requirements of Part V of this general permit.

**Section C. Limitations on Permit Coverage**

1. Post Construction Discharges.

Discharges that occur after construction activities have been completed, and after the construction site and any supporting activity site have undergone final stabilization, are not eligible for coverage under this general permit. Discharges originating from the sites are not authorized under this general permit following the submission of the notice of termination (NOT) for the construction activity.

2. Prohibition of Non-Storm Water Discharges

Except as otherwise provided in Part II.A. of this general permit, only discharges that are composed entirely of storm water associated with construction activity may be authorized under this general permit.

3. Compliance With Water Quality Standards

Discharges to surface water in the state that would cause or contribute to a violation of water quality standards or that would fail to protect and maintain existing designated uses are not eligible for coverage under this general permit. The executive director may require an application for an individual permit or alternative general permit (see Parts II.H.2. and 3.) to authorize discharges to surface water in the state from any activity that is determined to cause a violation of water quality standards or is found to cause, or contribute to, the loss of a designated use. The executive director may also require an application for an individual permit considering factors described in Part II.H.2. of this general permit.

4. Discharges to Water Quality-Impaired Receiving Waters.

New sources or new discharges of the constituents of concern to impaired waters are not authorized by this permit unless otherwise allowable under 30 TAC Chapter 305 and applicable state law. Impaired waters are those that do not meet applicable water quality standards and are listed on the EPA approved Clean Water Act Section 303(d) list. Constituents of concern are those for which the water body is listed as impaired.

Discharges of the constituents of concern to impaired water bodies for which there is a total maximum daily load (TMDL) are not eligible for this permit unless they are consistent with the approved TMDL. Permittees must incorporate the limitations, conditions, and requirements applicable to their discharges, including monitoring frequency and reporting required by TCEQ rules, into their storm water pollution prevention plan in order to be eligible for coverage under this general permit.

5. Discharges to the Edwards Aquifer Recharge Zone

Discharges cannot be authorized by this general permit where prohibited by 30 Texas Administrative Code (TAC) Chapter 213 (relating to Edwards Aquifer). **In addition, commencement of construction (i.e., the initial disturbance of soils associated with clearing, grading, or excavating activities, as well as other construction-related activities such as stockpiling of fill material and demolition) at a site regulated under 30 TAC Chapter 213, may not begin until the appropriate Edwards Aquifer Protection Plan has been approved by the TCEQ's Edwards Aquifer Protection Program.**

(a) For new discharges located within the Edwards Aquifer Recharge Zone, or within that area upstream from the recharge zone and defined as the Contributing Zone, operators must meet all applicable requirements of, and operate according to, 30 TAC Chapter 213 (Edwards Aquifer Rule) in addition to the provisions and requirements of this general permit.

(b) For existing discharges located within the Edwards Aquifer Recharge Zone, the requirements of the agency-approved Water Pollution Abatement Plan under the Edwards Aquifer Rules are in addition to the requirements of this general permit. BMPs and maintenance schedules for structural storm water controls, for example, may be required as a provision of the rule. All applicable requirements of the Edwards Aquifer Rule for reductions of suspended solids in storm water runoff are in addition to the requirements in this general permit for this pollutant.

For discharges from large construction activities located on the Edwards Aquifer recharge zone or the Edwards Aquifer contributing zone, applicants must submit a copy of the NOI to the appropriate TCEQ regional office. For discharges from small construction activities located on the Edwards Aquifer recharge zone or the Edwards Aquifer contributing zone, and for discharges from large construction activities by operators not required to submit an NOI under this general permit, applicants must submit a copy of the construction site notice to the appropriate TCEQ regional office where required by the Edwards Aquifer Rules at 30 TAC Chapter 213:

| Counties: | Contact: |
|---|---|

| | |
|---|---|
| Comal, Bexar, Medina, Uvalde, and Kinney | TCEQ<br>Water Program Manager<br>San Antonio Regional Office<br>14250 Judson Rd.<br>San Antonio, Texas<br>(210) 490-3096 |
| Williamson, Travis, and Hays | TCEQ<br>Water Program Manager<br>Austin Regional Office<br>2800 South IH 35, Suite 100<br>Austin, Texas 78704-5712<br>(512) 339-2929 |

6. Discharges to Specific Watersheds and Water Quality Areas

Discharges otherwise eligible for coverage cannot be authorized by this general permit where prohibited by 30 TAC Chapter 311 (relating to Watershed Protection) for water quality areas and watersheds.

7. Protection of Streams and Watersheds by Other Governmental Entities

This general permit does not limit the authority or ability of federal, other state, or local governmental entities from placing additional or more stringent requirements on construction activities or discharges from construction activities. For example, this permit does not limit the authority of a home-rule municipality provided by Texas Local Government Code §401.002.

8. Indian Country Lands

Storm water runoff from construction activities occurring on Indian Country lands are not under the authority of the TCEQ and are not eligible for coverage under this general permit. If discharges of storm water require authorization under federal National Pollutant Discharge Elimination System (NPDES) regulations, authority for these discharges must be obtained from the U.S. Environmental Protection Agency (EPA).

9. Oil and Gas Production

Storm water runoff from construction activities associated with the exploration, development, or production of oil or gas or geothermal resources, including transportation of crude oil or natural gas by pipeline, are not under the authority of the TCEQ and are not eligible for coverage under this general permit. If discharges of storm water require authorization under federal NPDES regulations, authority for these discharges must be obtained from the EPA.

10. Storm Water Discharges from Agricultural Activities

Storm water discharges from agricultural activities that are not point source discharges of storm water are not subject to TPDES permit requirements. These activities may include clearing and cultivating ground for crops, construction of fences to contain livestock, construction of stock ponds, and other similar agricultural activities. Discharges of storm water runoff associated with the construction of facilities that are subject to TPDES regulations, such as the construction of confined animal feeding operations, would be point sources regulated under this general permit.

11. Other

Nothing in Part II of the general permit is intended to negate any person's ability to assert the force majeure (act of God, war, strike, riot, or other catastrophe) defenses found in 30 TAC § 70.7.

## Section D. Deadlines for Obtaining Authorization to Discharge

1. Large Construction Activities

(a) New Construction - Discharges from sites where the commencement of construction occurs on or after the effective date of this general permit must be authorized, either under this general permit or a separate TPDES permit, prior to the commencement of those construction activities.

(b) Ongoing Construction - Operators of large construction activities continuing to operate after the effective date of this permit, and authorized under TPDES general permit TXR150000 (issued March 5, 2003), must submit an NOI to renew authorization under this general permit within 90 days of the effective date of this general permit. During this interim period, as a requirement of this TPDES permit, the operator must continue to meet the conditions and requirements of the previous TPDES permit.

2. Small Construction Activities

(a) New Construction - Discharges from sites where the commencement of construction occurs on or after the effective date of this general permit must be authorized, either under this general permit or a separate TPDES permit, prior to the commencement of those construction activities.

(b) Ongoing Construction - Discharges from ongoing small construction activities that commenced prior to the effective date of this general permit, and that would not meet the conditions to qualify for termination of this permit as described in Part II.E. of this general permit, must meet the requirements to be authorized, either under this general permit or a separate TPDES permit, within 90 days of the effective date of this general permit. During this interim period, as a requirement of this TPDES permit, the operator must continue to meet the conditions and requirements of the previous TPDES permit.

## Section E. Obtaining Authorization to Discharge

1. Automatic Authorization for Small Construction Activities With Low Potential for Erosion:

If all of the following conditions are met, then a small construction activity is determined to occur during periods of low potential for erosion, and a site operator may be automatically authorized under this general permit without being required to develop a storm water pollution prevention plan or submit a notice of intent (NOI):

(a) the construction activity occurs in a county listed in Appendix A;

(b) the construction activity is initiated and completed, including either final or temporary stabilization of all disturbed areas, within the time frame identified in Appendix A for the location of the construction site;

(c) all temporary stabilization is adequately maintained to effectively reduce or prohibit erosion, permanent stabilization activities have been initiated, and a condition of final stabilization is completed no later than 30 days following the end date of the time frame identified in Appendix A for the location of the construction site;

(d) the permittee signs a completed construction site notice (Attachment 1 of this general permit), including the certification statement;

(e) a signed copy of the construction site notice is posted at the construction site in a location where it is readily available for viewing by the general public, local, state, and federal authorities prior to commencing construction activities, and maintained in that location until completion of the construction activity;

(f) a copy of the signed and certified construction site notice is provided to the operator of any municipal separate storm sewer system (MS4) receiving the discharge at least two days prior to commencement of construction activities;

(g) any supporting concrete batch plant or asphalt batch plant is separately authorized for discharges of storm water runoff or other non-storm water discharges under an individual TPDES permit, another TPDES general permit, or under an individual TCEQ permit where storm water and non-storm water is disposed of by evaporation or irrigation (discharges are adjacent to water in the state); and

(h) any non-storm water discharges are either authorized under a separate permit or authorization, or are not considered to be a wastewater.

Part II.G. of this general permit describes how an operator may apply for and obtain a waiver from permitting, for certain small construction activities that occur during a period with a low potential for erosion, where automatic authorization under this section is not available.

2. Automatic Authorization For All Other Small Construction Activities:

Operators of small construction activities not described in Part II.E.1. above may be automatically authorized under this general permit, and operators of these sites shall not be required to submit an NOI, provided that they meet all of the following conditions:

(a) develop a SWP3 according to the provisions of this general permit, that covers either the entire site or all portions of the site for which the applicant is the operator, and implement that plan prior to commencing construction activities;

(b) sign and certify a completed construction site notice (Attachment 2 of this general permit), post the notice at the construction site in a location where it is safely and readily available for viewing by the general public, local, state, and federal authorities, prior to commencing construction, and maintain the notice in that location until completion of the construction activity (for linear construction activities, e.g. pipeline or highway, the site notice must be placed in a publicly accessible location near where construction is actively underway; notice for these linear sites may be relocated, as necessary, along the length of the project, and the notice must be safely and readily available for viewing by the general public; local, state, and federal authorities); and

(c) provide a copy of the signed and certified construction site notice to the operator of any municipal separate storm sewer system receiving the discharge at least two days prior to commencement of construction activities.

Operators of small construction activities as defined in Part I of this general permit shall not submit an NOI for coverage unless otherwise required by the executive director.

As described in Part I (Definitions) of this general permit, large construction activities include those that will disturb less than five (5) acres of land, but that are part of a larger common plan of development or sale that will ultimately disturb five (5) or more acres of land, and must meet the requirements of Part II.E.3. below.

3. Authorization for Large Construction Activities:

Operators of large construction activities that qualify for coverage under this general permit must meet all of the following conditions:

(a) develop a SWP3 according to the provisions of this general permit that covers either the entire site or all portions of the site for which the applicant is the operator, and implement that plan prior to commencing construction activities;

(b) primary operators must submit a Notice of Intent (NOI), using a form provided by the executive director, at least seven (7) days prior to commencing construction activities, or if utilizing electronic submittal, prior to commencing construction activities. If an additional primary operator is added after the initial NOI is submitted, the new primary operator must submit an NOI at least seven (7) days before assuming operational control, or if utilizing electronic NOI submittal, prior to assuming operational control. If the primary operator changes after the initial NOI is submitted, the new primary operator must submit a paper NOI or an electronic NOI at least ten (10) days before assuming operational control;

(c) all primary operators must also post a copy of the signed NOI at the construction site in a location where it is readily available for viewing by the general public, local,

state, and federal authorities prior to commencing construction activities, and must maintain the NOI in that location until completion of the construction activity;

(d) all operators of large construction activities must post a site notice in accordance with Part III.D.2. of this permit. The site notice must be located where it is safely and readily available for viewing by the general public, local, state, and federal authorities prior to commencing construction, and must be maintained in that location until completion of the construction activity (for linear construction activities, e.g. pipeline or highway, the site notice must be placed in a publicly accessible location near where construction is actively underway; notice for these linear sites may be relocated, as necessary, along the length of the project, and the notice must be safely and readily available for viewing by the general public; local, state, and federal authorities); and

(e) all primary operators must provide a copy of the signed NOI to the operator of any municipal separate storm sewer system (MS4) receiving the discharge and to any secondary operator, at least seven (7) days prior to commencing construction activities, and must list in the SWP3 the names and addresses of all MS4 operators receiving a copy.

(f) All persons meeting the definition of "secondary operator" in Part I of this permit are hereby notified that they are regulated under this general permit, but are not required to submit an NOI, provided that another operator(s) at the site has submitted an NOI, or is required to submit an NOI and the secondary operator has provided notification to the operator(s) of the need to obtain coverage (with records of notification available upon request). Any secondary operator notified under this provision may alternatively submit an NOI under this general permit, may seek coverage under an alternative TPDES individual permit, or may seek coverage under an alternative TPDES general permit if available.

4. Waivers for Small Construction Activities:

Part II.G. describes how operators of certain small construction activities may obtain a waiver from coverage.

5. Effective Date of Coverage

(a) Operators of small construction activities as described in either Part II.E.1. or II.E.2. above are authorized immediately following compliance with the applicable conditions of Part II.E.1. or II.E.2. Secondary operators of large construction activities as described in Part II.E.3. above are authorized immediately following compliance with the applicable conditions in Part II.E.3. For activities located in areas regulated by 30 TAC Chapter 213, related to the Edwards Aquifer, this authorization to discharge is separate from the requirements of the operator's responsibilities under that rule. Construction may not commence for sites regulated under 30 TAC Chapter 213 until all applicable requirements of that rule are met.

(b) Primary operators of large construction activities as described in Part II.E.3. above are provisionally authorized seven (7) days from the date that a completed NOI is

postmarked for delivery to the TCEQ, unless otherwise notified by the executive director. If electronic submission of the NOI is provided, and unless otherwise notified by the executive director, primary operators are authorized immediately following confirmation of receipt of the NOI by the TCEQ. Authorization is non-provisional when the executive director finds the NOI is administratively complete and an authorization number is issued for the activity. For activities located in areas regulated by 30 TAC Chapter 213, related to the Edwards Aquifer, this authorization to discharge is separate from the requirements of the operator's responsibilities under that rule. Construction may not commence for sites regulated under 30 TAC Chapter 213 until all applicable requirements of that rule are met.

(c) Operators are not prohibited from submitting late NOIs or posting late notices to obtain authorization under this general permit. The TCEQ reserves the right to take appropriate enforcement actions for any unpermitted activities that may have occurred between the time construction commenced and authorization was obtained.

6. Notice of Change (NOC)

If relevant information provided in the NOI changes, an NOC must be submitted at least 14 days before the change occurs, if possible. Where 14-day advance notice is not possible, the operator must submit an NOC within 14 days of discovery of the change. If the operator becomes aware that it failed to submit any relevant facts or submitted incorrect information in an NOI, the correct information must be provided to the executive director in an NOC within 14 days after discovery. The NOC shall be submitted on a form provided by the executive director, or by letter if an NOC form is not available. A copy of the NOC must also be provided to the operator of any MS4 receiving the discharge, and a list must be included in the SWP3 that includes the names and addresses of all MS4 operators receiving a copy.

Information that may be included on an NOC includes, but is not limited to, the following: the description of the construction project, an increase in the number of acres disturbed (for increases of one or more acres), or the operator name. A transfer of operational control from one operator to another, including a transfer of the ownership of a company, may not be included in an NOC. A transfer of ownership of a company includes changes to the structure of a company, such as changing from a partnership to a corporation or changing corporation types, so that the filing number (or charter number) that is on record with the Texas Secretary of State must be changed.

An NOC is not required for notifying TCEQ of a decrease in the number of acres disturbed. This information must be included in the storm water pollution prevention plan (SWP3) and retained on site.

7. Signatory Requirement for NOI Forms, Notice of Termination (NOT) Forms, NOC Letters, and Construction Site Notices

NOI forms, NOT forms, NOC letters, and Construction Site Notices that require a signature must be signed according to 30 TAC § 305.44 (relating to Signatories for Applications).

8. Contents of the NOI

The NOI form shall require, at a minimum, the following information:

(a) the TPDES CGP authorization number for existing authorizations under this general permit, where the operator submits an NOI to renew coverage within 90 days of the effective date of this general permit;

(b) the name, address, and telephone number of the operator filing the NOI for permit coverage;

(c) the name (or other identifier), address, county, and latitude/longitude of the construction project or site;

(d) the number of acres that will be disturbed by the applicant;

(e) confirmation that the project or site will not be located on Indian Country lands;

(f) confirmation that a SWP3 has been developed, that it will be implemented prior to construction, and that it is compliant with any applicable local sediment and erosion control plans;

(g) name of the receiving water(s);

(h) the classified segment number for each classified segment that receives discharges from the regulated construction activity (if the discharge is not directly to a classified segment, then the classified segment number of the first classified segment that those discharges reach); and

(i) the name of all surface waters receiving discharges from the regulated construction activity that are on the latest EPA-approved CWA § 303(d) list of impaired waters.

## Section F. Terminating Coverage

1. Notice of Termination (NOT) Required

Each operator that has submitted an NOI for authorization under this general permit must apply to terminate that authorization following the conditions described in this section of the general permit. Authorization must be terminated by submitting a Notice of Termination (NOT) on a form supplied by the executive director. Authorization to discharge under this general permit terminates at midnight on the day the NOT is postmarked for delivery to the TCEQ. If electronic submission of the NOT is provided, authorization to discharge under this permit terminates immediately following confirmation of receipt of the NOT by the TCEQ. Compliance with the conditions and requirements of this permit is required until an NOT is submitted.

The NOT must be submitted to TCEQ, and a copy of the NOT provided to the operator of any MS4 receiving the discharge (with a list in the SWP3 of the names and addresses of all MS4 operators receiving a copy), within 30 days after any of the following conditions are met:

(a) final stabilization has been achieved on all portions of the site that are the responsibility of the permittee;

(b) a transfer of operational control has occurred (See Section II.F.4. below); or

(c) the operator has obtained alternative authorization under an individual TPDES permit or alternative TPDES general permit.

2. Minimum Contents of the NOT

The NOT form shall require, at a minimum, the following information:

(a) if authorization was granted following submission of an NOI, the permittee's site-specific TPDES authorization number for the construction site;

(b) an indication of whether the construction activity is completed or if the permittee is simply no longer an operator at the site;

(c) the name, address, and telephone number of the permittee submitting the NOT;

(d) the name (or other identifier), address, county, and latitude/longitude of the construction project or site; and

(e) a signed certification that either all storm water discharges requiring authorization under this general permit will no longer occur, or that the applicant to terminate coverage is no longer the operator of the facility or construction site, and that all temporary structural erosion controls have either been removed, will be removed on a schedule defined in the SWP3, or have been transferred to a new operator if the new operator has applied for permit coverage. Erosion controls that are designed to remain in place for an indefinite period, such as mulches and fiber mats, are not required to be removed or scheduled for removal.

3. Termination of Coverage for Small Construction Sites and for Secondary Operators at Large Construction Sites

Each operator that has obtained automatic authorization and has not been required to submit an NOI must remove the site notice upon meeting any of the conditions listed below, complete the applicable portion of the site notice related to removal of the site notice, and submit a copy of the completed site notice to the operator of any MS4 receiving the discharge (or provide alternative notification as allowed by the MS4 operator, with documentation of such notification included in the SWP3), within 30 days of meeting any of the following conditions:

(a) final stabilization has been achieved on all portions of the site that are the responsibility of the permittee;

(b) a transfer of operational control has occurred (See Section II.F.4. below); or

(c) the operator has obtained alternative authorization under an individual or general TPDES permit.

Authorization to discharge under this general permit terminates immediately upon removal of the applicable site notice. Compliance with the conditions and requirements of this permit is required until the site notice is removed.

4. Transfer of Operational Control

Coverage under this general permit is not transferable. A transfer of operational control includes changes to the structure of a company, such as changing from a partnership to a corporation, or changing to a different corporation type such that a different filing (or charter) number is established with the Texas Secretary of State.

When the primary operator of a large construction activity changes or operational control is transferred, the original operator must submit a Notice of Termination (NOT) within ten (10) days prior to the date that responsibility for operations terminates, and the new operator must submit an NOI at least ten (10) days prior to the transfer of operational control, in accordance with condition (a) or (b) below. A copy of the NOT must be provided to the operator of any MS4 receiving the discharge in accordance with Section II.F.1. above.

Operators of regulated construction activities who are not required to submit an NOI must remove the original site notice, and the new operator must post the required site notice prior to the transfer of operational control, in accordance with condition (a) or (b) below. A copy of the completed site notice must be provided to the operator of any MS4 receiving the discharge, in accordance with Section II.F.3. above.

A transfer of operational control occurs when either of the following criteria is met:

(a) Another operator has assumed control over all areas of the site that have not been finally stabilized; and all silt fences and other temporary erosion controls have either been removed, scheduled for removal as defined in the SWP3, or transferred to a new operator, provided that the permitted operator has attempted to notify the new operator in writing of the requirement to obtain permit coverage. Record of this notification (or attempt at notification) shall be retained by the operator in accordance with Part VI of this permit. Erosion controls that are designed to remain in place for an indefinite period, such as mulches and fiber mats, are not required to be removed or scheduled for removal.

(b) A homebuilder has purchased one or more lots from an operator who obtained coverage under this general permit for a common plan of development or sale. The homebuilder is considered a new operator and shall comply with the requirements listed above, including the development of a SWP3 if necessary. Under these circumstances, the homebuilder is only responsible for compliance with the general permit requirements as they apply to lot(s) it has operational control over, and the original operator remains responsible for common controls or discharges, and must amend its SWP3 to remove the lot(s) transferred to the homebuilder.

## Section G. Waivers from Coverage

The executive director may waive the otherwise applicable requirements of this general permit for storm water discharges from small construction activities under the terms and conditions described in this section.

1. Waiver Applicability and Coverage

Operators of small construction activities may apply for and receive a waiver from the requirements to obtain authorization under this general permit, where all of the following conditions are met. This waiver from coverage does not apply to non-storm water discharges. The operator must insure that any non-storm water discharges are either authorized under a separate permit or authorization, or are not considered to be a wastewater.

(a) the calculated rainfall erosivity (R) factor for the entire period of the construction project is less than five (5);

(b) the operator submits to the TCEQ a signed waiver certification form, supplied by the executive director, certifying that the construction activity will commence and be completed within a period when the value of the calculated rainfall erosivity R factor is less than five (5); and

(c) the waiver certification form is postmarked for delivery to the TCEQ at least two (2) days before construction activity begins.

2. Steps to Obtaining a Waiver

The construction site operator may calculate the R factor to request a waiver using the following steps:

(a) Estimate the construction start date and the construction end date. The construction end date is the date that final stabilization will be achieved.

(b) Find the appropriate Erosivity Index (EI) zone in Appendix B of this permit.

(c) Find the EI percentage for the project period by adding the results for each period of the project using the table provided in Appendix D of this permit, in EPA Fact Sheet 2.1, or in USDA Handbook 703, by subtracting the start value from the end value to find the percent EI for the site.

(d) Refer to the Isoerodent Map (Appendix C of this permit) and interpolate the annual isoerodent value for the proposed construction location.

(e) Multiply the percent value obtained in Step (c) above by the annual isoerodent value obtained in Step (d). This is the R factor for the proposed project. If the value is less than 5, then a waiver may be obtained. If the value is five (5) or more, then a waiver may not be obtained, and the operator must obtain coverage under Part II.E.2. of this permit.

Alternatively, the operator may calculate a site-specific R factor utilizing the following online calculator: http://ei.tamu.edu/index.html, or using another available resource.

The waiver certification form is not required to be posted at the small construction site.

3. Effective Date of Waiver

Operators of small construction activities are provisionally waived from the otherwise applicable requirements of this general permit two (2) days from the date that a completed waiver certification form is postmarked for delivery to TCEQ.

4. Activities Extending Beyond the Waiver Period

If a construction activity extends beyond the approved waiver period due to circumstances beyond the control of the operator, the operator must either:

(a) recalculate the rainfall erosivity (R) factor using the original start date and a new projected ending date, and if the R factor is still under five (5), submit a new waiver certification form at least two (2) days before the end of the original waiver period; or

(b) obtain authorization under this general permit according to the requirements delineated in either Part II.E.2. or Part II.E.3. at least two (2) days before the end of the approved waiver period.

## Section H. Alternative TPDES Permit Coverage

1. Individual Permit Alternative

Any discharge eligible for coverage under this general permit may alternatively be authorized under an individual TPDES permit according to 30 TAC Chapter 305 (relating to Consolidated Permits). Applications for individual permit coverage should be submitted at least three hundred and thirty (330) days prior to commencement of construction activities to ensure timely issuance.

2. Individual Permit Required

The executive director may suspend an authorization or deny an NOI in accordance with the procedures set forth in 30 TAC Chapter 205 (relating to General Permits for Waste Discharges), including the requirement that the executive director provide written notice to the permittee. The executive director may require an operator of a construction site, otherwise eligible for authorization under this general permit, to apply for an individual TPDES permit in the following circumstances:

(a) the conditions of an approved total maximum daily load (TMDL) limitation or TMDL implementation plan on the receiving stream;

(b) the activity being determined to cause a violation of water quality standards or being found to cause, or contribute to, the loss of a designated use of surface water in the state: and

(c) any other consideration defined in 30 TAC Chapter 205 (relating to General Permits for Waste Discharges) including 30 TAC §205.4(c)(3)(D), which allows the commission to deny authorization under the general permit and require an individual permit if a discharger "has been determined by the executive director to have been out of compliance with any rule, order, or permit of the commission, including non-payment of fees assessed by the executive director."

Additionally, the executive director may cancel, revoke, or suspend authorization to discharge under this general permit based on a finding of historical and significant noncompliance with the provisions of this general permit, relating to 30 TAC §60.3 (Use of Compliance History). Denial of authorization to discharge under this general permit or suspension of a permittee's authorization under this general permit shall be done according to commission rules in 30 TAC, Chapter 205 (relating to General Permits for Waste Discharges).

3. Any discharge eligible for authorization under this general permit may alternatively be authorized under a separate general permit according to 30 TAC Chapter 205 (relating to General Permits for Waste Discharges), if applicable.

**Section I. Permit Expiration**

1. This general permit is issued for a term not to exceed five (5) years. All active discharge authorizations expire on the date provided on page one (1) of this permit. Following public notice and comment, as provided by 30 TAC §205.3 (relating to Public Notice, Public Meetings, and Public Comment), the commission may amend, revoke, cancel, or renew this general permit.

2. If the executive director publishes a notice of the intent to renew or amend this general permit before the expiration date, the permit will remain in effect for existing, authorized discharges until the commission takes final action on the permit. Upon issuance of a renewed or amended permit, permittees may be required to submit an NOI within 90 days following the effective date of the renewed or amended permit, unless that permit provides for an alternative method for obtaining authorization.

3. If the commission does not propose to reissue this general permit within 90 days before the expiration date, permittees shall apply for authorization under an individual permit or an alternative general permit. If the application for an individual permit is submitted before the expiration date, authorization under this expiring general permit remains in effect until the issuance or denial of an individual permit. No new NOIs will be accepted nor new authorizations honored under the general permit after the expiration date.

## Part III. Storm Water Pollution Prevention Plans (SWP3)

Storm water pollution prevention plans must be prepared to address discharges authorized under Parts II.E.2. and II.E.3. that will reach Waters of the United States, including discharges to MS4s and privately owned

separate storm sewer systems that drain to Waters of the United States, to identify and address potential sources of pollution that are reasonably expected to affect the quality of discharges from the construction site, including off-site material storage areas, overburden and stockpiles of dirt, borrow areas, equipment staging areas, vehicle repair areas, fueling areas, etc., used solely by the permitted project. The SWP3 must describe the implementation of practices that will be used to minimize to the extent practicable the discharge of pollutants in storm water associated with construction activity and non-storm water discharges described in Part II.A.3., in compliance with the terms and conditions of this permit.

Individual operators at a site may develop separate SWP3s that cover only their portion of the project, provided reference is made to the other operators at the site. Where there is more than one SWP3 for a site, permittees must coordinate to ensure that BMPs and controls are consistent and do not negate or impair the effectiveness of each other. Regardless of whether a single comprehensive SWP3 is developed or separate SWP3s are developed for each operator, it is the responsibility of each operator to ensure compliance with the terms and conditions of this general permit in the areas of the construction site where that operator has control over construction plans and specifications or day-to-day operations.

**Section A. Shared SWP3 Development**

For more effective coordination of BMPs and opportunities for cost sharing, a cooperative effort by the different operators at a site is encouraged. Operators must independently obtain authorization, but may work together to prepare and implement a single, comprehensive SWP3 for the entire construction site.

1. The SWP3 must clearly list the name and, for large construction activities, the general permit authorization numbers, for each operator that participates in the shared SWP3. Until the TCEQ responds to receipt of the NOI with a general permit authorization number, the SWP3 must specify the date that the NOI was submitted to TCEQ by each operator. Each operator participating in the shared plan must also sign the SWP3.

2. The SWP3 must clearly indicate which operator is responsible for satisfying each shared requirement of the SWP3. If the responsibility for satisfying a requirement is not described in the plan, then each permittee is entirely responsible for meeting the requirement within the boundaries of the construction site where they perform construction activities. The SWP3 must clearly describe responsibilities for meeting each requirement in shared or common areas.

**Section B. Responsibilities of Operators**

1. Secondary Operators and Primary Operators with Control Over Construction Plans and Specifications

   All secondary operators and primary operators with control over construction plans and specifications must:

   (a) ensure the project specifications allow or provide that adequate BMPs are developed to meet the requirements of Part III of this general permit;

   (b) ensure that the SWP3 indicates the areas of the project where they have control over project specifications, including the ability to make modifications in specifications;

(c) ensure all other operators affected by modifications in project specifications are notified in a timely manner so that those operators may modify their best management practices as necessary to remain compliant with the conditions of this general permit; and

(d) ensure that the SWP3 for portions of the project where they are operators indicates the name and site-specific TPDES authorization numbers for permittees with the day-to-day operational control over those activities necessary to ensure compliance with the SWP3 and other permit conditions. If the party with day-to-day operational control has not been authorized or has abandoned the site, the person with control over project specifications is considered to be the responsible party until the authority is transferred to another party and the SWP3 is updated.

2. Primary Operators with Day-to-Day Operational Control

Primary Operators with day-to-day operational control of those activities at a project that are necessary to ensure compliance with an SWP3 and other permit conditions must ensure that the SWP3 accomplishes the following requirements:

(a) meets the requirements of this general permit for those portions of the project where they are operators;

(b) identifies the parties responsible for implementation of best management practices (BMPs) described in the SWP3;

(c) indicates areas of the project where they have operational control over day-to-day activities; and

(d) includes, for areas where they have operational control over day-to-day activities, the name and site-specific TPDES authorization number of the parties with control over project specifications, including the ability to make modifications in specifications.

## Section C. Deadlines for SWP3 Preparation, Implementation, and Compliance

The SWP3 must be prepared prior to obtaining authorization under this general permit, and implemented prior to commencing construction activities that result in soil disturbance. The SWP3 must be prepared so that it provides for compliance with the terms and conditions of this general permit.

## Section D. Plan Review and Making Plans Available

1. The SWP3 must be retained on-site at the construction site or, if the site is inactive or does not have an on-site location to store the plan, a notice must be posted describing the location of the SWP3. The SWP3 must be made readily available at the time of an on-site inspection to: the executive director; a federal, state, or local agency approving sediment and erosion plans, grading plans, or storm water management plans; local government officials; and the operator of a municipal separate storm sewer receiving discharges from the site.

2. In addition to the requirement to post the NOI, a primary operator of a large construction activity must post the site notice provided in Attachment 4 of this permit near the main entrance of the construction site. An operator of a small construction activity seeking authorization under this general permit and a secondary operator of a large construction activity must post the site notice required in Part II.E.1., 2., or 3. of this permit in order to obtain authorization (see Attachments 1, 2, and 3). If the construction project is a linear construction project (e.g. pipeline or highway), the notices must be placed in a publicly accessible location near where construction is actively underway. Notices for these linear sites may be relocated, as necessary, along the length of the project. The notices must be readily available for viewing by the general public; local, state, and federal authorities; and contain the following information:

   (a) the site-specific TPDES authorization number for the project if assigned;

   (b) the operator name, contact name, and contact phone number;

   (c) a brief description of the project; and

   (d) the location of the SWP3.

3. This permit does not provide the general public with any right to trespass on a construction site for any reason, including inspection of a site; nor does this permit require that permittees allow members of the general public access to a construction site.

## Section E. Revisions and Updates to SWP3s

The permittee must revise or update the SWP3 whenever the following occurs:

1. a change in design, construction, operation, or maintenance that has a significant effect on the discharge of pollutants and that has not been previously addressed in the SWP3;

2. changing site conditions based on updated plans and specifications, new operators, new areas of responsibility, and changes in BMPs; or

3. results of inspections or investigations by site operators, operators of a municipal separate storm sewer system receiving the discharge, authorized TCEQ personnel, or a federal, state or local agency approving sediment and erosion plans indicate the SWP3 is proving ineffective in eliminating or significantly minimizing pollutants in discharges authorized under this general permit.

## Section F. Contents of SWP3

The SWP3 must include, at a minimum, the information described in this section.

1. A site or project description, which includes the following information:

   (a) a description of the nature of the construction activity;

   (b) a list of potential pollutants and their sources;

(c) a description of the intended schedule or sequence of activities that will disturb soils for major portions of the site;

(d) the total number of acres of the entire property and the total number of acres where construction activities will occur, including off-site material storage areas, overburden and stockpiles of dirt, and borrow areas that are authorized under the permittee's NOI;

(e) data describing the soil or the quality of any discharge from the site;

(f) a map showing the general location of the site (e.g. a portion of a city or county map);

(g) a detailed site map (or maps) indicating the following:

(i) drainage patterns and approximate slopes anticipated after major grading activities;

(ii) areas where soil disturbance will occur;

(iii) locations of all major structural controls either planned or in place;

(iv) locations where temporary or permanent stabilization practices are expected to be used;

(v) locations of construction support activities, including off-site activities, that are authorized under the permittee's NOI, including material, waste, borrow, fill, or equipment storage areas;

(vi) surface waters (including wetlands) either at, adjacent, or in close proximity to the site;

(vii) locations where storm water discharges from the site directly to a surface water body or a municipal separate storm sewer system; and

(viii) vehicle wash areas.

Where the amount of information required to be included on the map would result in a single map being difficult to read and interpret, the operator shall develop a series of maps that collectively include the required information.

(h) the location and description of support activities authorized under the permittee's NOI, including asphalt plants, concrete plants, and other activities providing support to the construction site that is authorized under this general permit;

(i) the name of receiving waters at or near the site that may be disturbed or that may receive discharges from disturbed areas of the project;

(j) a copy of this TPDES general permit, and

(k) the notice of intent (NOI) and acknowledgement certificate for primary operators of large construction sites, and the site notice for small construction sites and for secondary operators of large construction sites.

2. A description of the best management practices (BMPs) that will be used to minimize pollution in runoff.

The description must identify the general timing or sequence for implementation. At a minimum, the description must include the following components:

(a) General Requirements

(i) Erosion and sediment controls must be designed to retain sediment on-site to the extent practicable with consideration for local topography, soil type, and rainfall.

(ii) Control measures must be properly selected, installed, and maintained according to the manufacturer's or designer's specifications.

(iii) Controls must be developed to minimize the offsite transport of litter, construction debris, and construction materials.

(b) Erosion Control and Stabilization Practices

The SWP3 must include a description of temporary and permanent erosion control and stabilization practices for the site, including a schedule of when the practices will be implemented. Site plans should ensure that existing vegetation is preserved where it is possible.

(i) Erosion control and stabilization practices may include but are not limited to: establishment of temporary or permanent vegetation, mulching, geotextiles, sod stabilization, vegetative buffer strips, protection of existing trees and vegetation, slope texturing, temporary velocity dissipation devices, flow diversion mechanisms, and other similar measures.

(ii) The following records must be maintained and either attached to or referenced in the SWP3, and made readily available upon request to the parties listed in Part III.D.1 of this general permit:

(A) the dates when major grading activities occur;

(B) the dates when construction activities temporarily or permanently cease on a portion of the site; and

(C) the dates when stabilization measures are initiated.

(iii) Erosion control and stabilization measures must be initiated as soon as practicable in portions of the site where construction activities have temporarily ceased. Stabilization measures that provide a protective cover must be initiated as soon as practicable in portions of the site where construction activities have permanently ceased. Except as provided in (A) through (D) below, these measures must be initiated no more than 14 days after the construction activity in that portion of the site has temporarily or permanently ceased:

(A) Where the initiation of stabilization measures by the 14th day after construction activity temporarily or permanently ceased is precluded by snow cover or frozen ground conditions, stabilization measures must be initiated as soon as practicable.

(B) Where construction activity on a portion of the site has temporarily ceased, and earth disturbing activities will be resumed within 21 days, temporary erosion control and stabilization measures are not required on that portion of site.

(C) In arid areas, semiarid areas, and areas experiencing droughts where the initiation of stabilization measures by the 14th day after construction activity has temporarily or permanently ceased or is precluded by arid conditions, erosion control and stabilization measures must be initiated as soon as practicable. Where vegetative controls are not feasible due to arid conditions, the operator shall install non-vegetative erosion controls. If non-vegetative controls are not feasible, the operator shall install temporary sediment controls as required in Paragraph (D) below.

(D) In areas where temporary stabilization measures are infeasible, the operator may alternatively utilize temporary perimeter controls. The operator must document in the SWP3 the reason why stabilization measures are not feasible, and must demonstrate that the perimeter controls will retain sediment on site to the extent practicable. The operator must continue to inspect the BMPs at the frequency established in Section III.F.7.(a) for unstabilized sites.

(iv) Final stabilization must be achieved prior to termination of permit coverage.

(c) Sediment Control Practices

The SWP3 must include a description of any sediment control practices used to remove eroded soils from storm water runoff, including the general timing or sequence for implementation of controls.

(i) Sites With Drainage Areas of Ten or More Acres

(A) Sedimentation Basin(s)

(1) A sedimentation basin is required, where feasible, for a common drainage location that serves an area with ten (10) or more acres disturbed at one time. A sedimentation basin may be temporary or permanent, and must provide sufficient storage to contain a calculated volume of runoff from a 2-year, 24-hour storm from each disturbed acre drained. When calculating the volume of runoff from a 2-year, 24-hour storm event, it is not required to include the flows from offsite areas and flow from onsite areas that are either undisturbed or have already undergone permanent stabilization, if these flows are diverted around both the disturbed areas of the site and the sediment basin. Capacity calculations shall be included in the SWP3.

(2) Where rainfall data is not available or a calculation cannot be performed, the sedimentation basin must provide at least 3,600 cubic feet of storage per acre drained until final stabilization of the site.

(3) If a sedimentation basin is not feasible, then the permittee shall provide equivalent control measures until final stabilization of the site. In determining whether installing a sediment basin is feasible, the permittee may consider factors such as site soils, slope, available area, public safety, precipitation patterns, site geometry, site vegetation, infiltration capacity, geotechnical factors, depth to groundwater, and other similar considerations. The permittee shall document the reason that the sediment basins are not feasible, and shall utilize equivalent control measures, which may include a series of smaller sediment basins.

(B) Perimeter Controls: At a minimum, silt fences, vegetative buffer strips, or equivalent sediment controls are required for all down slope boundaries of the construction area, and for those side slope boundaries deemed appropriate as dictated by individual site conditions.

(ii) Controls for Sites With Drainage Areas Less than Ten Acres:

(A) Sediment traps and sediment basins may be used to control solids in storm water runoff for drainage locations serving less than ten (10) acres. At a minimum, silt fences, vegetative buffer strips, or equivalent sediment controls are required for all down slope boundaries of the construction area, and for those side slope boundaries deemed appropriate as dictated by individual site conditions.

(B) Alternatively, a sediment basin that provides storage for a calculated volume of runoff from a 2-year, 24-hour storm from each disturbed

acre drained may be utilized. Where rainfall data is not available or a calculation cannot be performed, a temporary or permanent sediment basin providing 3,600 cubic feet of storage per acre drained may be provided. If a calculation is performed, then the calculation shall be included in the SWP3.

3. A Description of Permanent Storm Water Controls

A description of any measures that will be installed during the construction process to control pollutants in storm water discharges that may occur after construction operations have been completed must be included in the SWP3. Permittees are only responsible for the installation and maintenance of storm water management measures prior to final stabilization of the site or prior to submission of an NOT.

4. Other Required Controls and BMPs

(a) Permittees shall minimize, to the extent practicable, the off-site vehicle tracking of sediments and the generation of dust. The SWP3 shall include a description of controls utilized to accomplish this requirement.

(b) The SWP3 must include a description of construction and waste materials expected to be stored on-site and a description of controls to minimize pollutants from these materials.

(c) The SWP3 must include a description of potential pollutant sources from areas other than construction (such as storm water discharges from dedicated asphalt plants and dedicated concrete batch plants), and a description of controls and measures that will be implemented at those sites to minimize pollutant discharges.

(d) Permittees shall place velocity dissipation devices at discharge locations and along the length of any outfall channel (i.e., runoff conveyance) to provide a non-erosive flow velocity from the structure to a water course, so that the natural physical and biological characteristics and functions are maintained and protected.

(e) Permittees shall design and utilize appropriate controls to minimize the offsite transport of suspended sediments and other pollutants if it is necessary to pump or channel standing water from the site.

5. Documentation of Compliance with Approved State and Local Plans

(a) Permittees must ensure that the SWP3 is consistent with requirements specified in applicable sediment and erosion site plans or site permits, or storm water management site plans or site permits approved by federal, state, or local officials.

(b) SWP3s must be updated as necessary to remain consistent with any changes applicable to protecting surface water resources in sediment erosion site plans or site permits, or storm water management site plans or site permits approved by state or local official for which the permittee receives written notice.

(c) If the permittee is required to prepare a separate management plan, including but not limited to a Water Pollution Abatement Plan or Contributing Zone Plan in accordance with 30 TAC Chapter 213 (related to the Edwards Aquifer), then a copy of that plan must be either included in the SWP3 or made readily available upon request to authorized personnel of the TCEQ. The permittee shall maintain a copy of the approval letter for the plan in its SWP3.

6. Maintenance Requirements

(a) All protective measures identified in the SWP3 must be maintained in effective operating condition. If, through inspections or other means, the permittee determines that BMPs are not operating effectively, then the permittee shall perform maintenance as necessary to maintain the continued effectiveness of storm water controls, and prior to the next rain event if feasible. If maintenance prior to the next anticipated storm event is impracticable, the reason shall be documented in the SWP3 and maintenance must be scheduled and accomplished as soon as practicable. Erosion and sediment controls that have been intentionally disabled, run-over, removed, or otherwise rendered ineffective must be replaced or corrected immediately upon discovery.

(b) If periodic inspections or other information indicates a control has been used incorrectly, is performing inadequately, or is damaged, then the operator must replace or modify the control as soon as practicable after making the discovery.

(c) Sediment must be removed from sediment traps and sedimentation ponds no later than the time that design capacity has been reduced by 50%. For perimeter controls such as silt fences, berms, etc., the trapped sediment must be removed before it reaches 50% of the above-ground height.

(d) If sediment escapes the site, accumulations must be removed at a frequency that minimizes off-site impacts, and prior to the next rain event, if feasible. If the permittee does not own or operate the off-site conveyance, then the permittee must to work with the owner or operator of the property to remove the sediment.

7. Inspections of Controls

(a) Personnel provided by the permittee must inspect disturbed areas of the construction site that have not been finally stabilized, areas used for storage of materials that are exposed to precipitation, discharge locations, and structural controls for evidence of, or the potential for, pollutants entering the drainage system. Personnel conducting these inspections must be knowledgeable of this general permit, familiar with the construction site, and knowledgeable of the SWP3 for the site. Sediment and erosion control measures identified in the SWP3 must be inspected to ensure that they are operating correctly. Locations where vehicles enter or exit the site must be inspected for evidence of off-site sediment tracking. Inspections must be conducted at least once every 14 calendar days and within 24 hours of the end of a storm event of 0.5 inches or greater.

Where sites have been finally or temporarily stabilized or where runoff is unlikely due to winter conditions (e.g. site is covered with snow, ice, or frozen ground exists), inspections must be conducted at least once every month. In arid or semi-arid areas, inspections must be conducted at least once every month and within 24 hours after the end of a storm event of 0.5 inches or greater.

As an alternative to the above-described inspection schedule of once every 14 calendar days and within 24 hours of a storm event of 0.5 inches or greater, the SWP3 may be developed to require that these inspections will occur at least once every seven (7) calendar days. If this alternative schedule is developed, then the inspection must occur on a specifically defined day, regardless of whether or not there has been a rainfall event since the previous inspection. The inspections may occur on either schedule provided that the SWP3 reflects the current schedule and that any changes to the schedule are conducted in accordance with the following provisions: the schedule may be changed a maximum of one time each month, the schedule change must be implemented at the beginning of a calendar month, and the reason for the schedule change must be documented in the SWP3 (e.g., end of "dry" season and beginning of "wet" season).

(b) Utility line installation, pipeline construction, and other examples of long, narrow, linear construction activities may provide inspection personnel with limited access to the areas described in Part III.F.8.(a) above. Inspection of these areas could require that vehicles compromise temporarily or even permanently stabilized areas, cause additional disturbance of soils, and increase the potential for erosion. In these circumstances, controls must be inspected at least once every 14 calendar days and within 24 hours of the end of a storm event of 0.5 inches, but representative inspections may be performed. For representative inspections, personnel must inspect controls along the construction site for 0.25 mile above and below each access point where a roadway, undisturbed right-of-way, or other similar feature intersects the construction site and allows access to the areas described in Part III.F.8.(a) above. The conditions of the controls along each inspected 0.25 mile portion may be considered as representative of the condition of controls along that reach extending from the end of the 0.25 mile portion to either the end of the next 0.25 mile inspected portion, or to the end of the project, whichever occurs first.

As an alternative to the above-described inspection schedule of once every 14 calendar days and within 24 hours of a storm event of 0.5 inches or greater, the SWP3 may be developed to require that these inspections will occur at least once every seven (7) calendar days. If this alternative schedule is developed, the inspection must occur on a specifically defined day, regardless of whether or not there has been a rainfall event since the previous inspection. The inspections may occur on either schedule provided that the SWP3 reflects the current schedule and that any changes to the schedule are conducted in accordance with the following provisions: the schedule may be changed a maximum of one time each month, the schedule change must be implemented at the beginning of a calendar month, and the reason for the schedule change must be documented in the SWP3 (e.g., end of "dry" season and beginning of "wet" season).

(c) In the event of flooding or other uncontrollable situations which prohibit access to the inspection sites, inspections must be conducted as soon as access is practicable.

(d) The SWP3 must be modified based on the results of inspections, as necessary, to better control pollutants in runoff. Revisions to the SWP3 must be completed within seven (7) calendar days following the inspection. If existing BMPs are modified or if additional BMPs are necessary, an implementation schedule must be described in the SWP3 and wherever possible those changes implemented before the next storm event. If implementation before the next anticipated storm event is impracticable, these changes must be implemented as soon as practicable.

(e) A report summarizing the scope of the inspection, the date(s) of the inspection, and major observations relating to the implementation of the SWP3 must be made and retained as part of the SWP3. Major observations should include: The locations of discharges of sediment or other pollutants from the site; locations of BMPs that need to be maintained; locations of BMPs that failed to operate as designed or proved inadequate for a particular location; and locations where additional BMPs are needed.

Actions taken as a result of inspections must be described within, and retained as a part of, the SWP3. Reports must identify any incidents of non-compliance. Where a report does not identify any incidents of non-compliance, the report must contain a certification that the facility or site is in compliance with the SWP3 and this permit. The report must be signed by the person and in the manner required by 30 TAC § 305.128 (relating to Signatories to Reports).

The names and qualifications of personnel making the inspections for the permittee may be documented once in the SWP3 rather than being included in each report.

8. The SWP3 must identify and ensure the implementation of appropriate pollution prevention measures for all eligible non-storm water components of the discharge, as listed in Part II.A.3. of this permit.

9. The SWP3 must include the information required in Part III.B. of this general permit.

## Part IV. Storm Water Runoff from Concrete Batch Plants

Discharges of storm water runoff from concrete batch plants at regulated construction sites may be authorized under the provisions of this general permit provided that the following requirements are met for concrete batch plant(s) authorized under this permit. If discharges of storm water runoff from concrete batch plants are not covered under this general permit, then discharges must be authorized under an alternative general permit or individual permit. This permit does not authorize the discharge or land disposal of any wastewater from concrete batch plants at regulated construction sites. Authorization for these wastes must be obtained under an individual permit or an alternative general permit.

### Section A. Benchmark Sampling Requirements

1. Operators of concrete batch plants authorized under this general permit must sample the storm water runoff from the concrete batch plants according to the requirements of this

section of this general permit, and must conduct evaluations on the effectiveness of the SWP3 based on the following benchmark monitoring values:

| Benchmark Parameter | Benchmark Value | Sampling Frequency | Sample Type |
|---|---|---|---|
| Oil and Grease | 15 mg/L | 1/quarter (*1)(*2) | Grab (*3) |
| Total Suspended Solids | 100 mg/L | 1/quarter (*1)(*2) | Grab (*3) |
| pH | 6.0 - 9.0 Standard Units | 1/quarter (*1)(*2) | Grab (*3) |
| Total Iron | 1.3 mg/L | 1/quarter(*1)(*2) | Grab (*3) |

(*1) When discharge occurs. Sampling is required within the first 30 minutes of discharge. If it is not practicable to take the sample, or to complete the sampling, within the first 30 minutes, sampling must be completed within the first hour of discharge. If sampling is not completed within the first 30 minutes of discharge, the reason must be documented and attached to all required reports and records of the sampling activity.

(*2) Sampling must be conducted at least once during each of the following periods. The first sample must be collected during the first full quarter that a storm water discharge occurs from a concrete batch plant authorized under this general permit.

January through March
April through June
July through September
October through December

For projects lasting less than one full quarter, a minimum of one sample shall be collected, provided that a storm water discharge occurred at least once following submission of the NOI or following the date that automatic authorization was obtained under Section II.E.2., and prior to terminating coverage.

(*3) A grab sample shall be collected from the storm water discharge resulting from a storm event that is at least 0.1 inches of measured precipitation that occurs at least 72 hours from the previously measurable storm event. The sample shall be collected downstream of the concrete batch plant, and where the discharge exits any BMPs utilized to handle the runoff from the batch plant, prior to commingling with any other water authorized under this general permit.

2. The permittee must compare the results of sample analyses to the benchmark values above, and must include this comparison in the overall assessment of the SWP3's effectiveness. Analytical results that exceed a benchmark value are not a violation of this permit, as these values are not numeric effluent limitations. Results of analyses are indicators that modifications of the SWP3 should be assessed and may be necessary to protect water quality. The operator must investigate the cause for each exceedance and must document the results of this investigation in the SWP3 by the end of the quarter following the sampling event.

The operator's investigation must identify the following:

(a) any additional potential sources of pollution, such as spills that might have occurred,

(b) necessary revisions to good housekeeping measures that are part of the SWP3,

(c) additional BMPs, including a schedule to install or implement the BMPs, and

(d) other parts of the SWP3 that may require revisions in order to meet the goal of the benchmark values.

Background concentrations of specific pollutants may also be considered during the investigation. If the operator is able to relate the cause of the exceedance to background concentrations, then subsequent exceedances of benchmark values for that pollutant may be resolved by referencing earlier findings in the SWP3. Background concentrations may be identified by laboratory analyses of samples of storm water runon to the permitted facility, by laboratory analyses of samples of storm water run-off from adjacent non-industrial areas, or by identifying the pollutant is a naturally occurring material in soils at the site.

## Section B. Best Management Practices (BMPs) and SWP3 Requirements

Minimum Storm Water Pollution Prevention Plan (SWP3) Requirements – The following are required in addition to other SWP3 requirements listed in this general permit (including, but not limited to Part III.F.7. of this permit):

1. Description of Potential Pollutant Sources - The SWP3 must provide a description of potential sources (activities and materials) that may reasonably be expected to affect the quality of storm water discharges associated with concrete batch plants authorized under this permit. The SWP3 must describe practices that that will be used to reduce the pollutants in these discharges to assure compliance with this general permit, including the protection of water quality, and must ensure the implementation of these practices.

   The following must be developed, at a minimum, in support of developing this description:

   (a) Drainage – The site map must include the following information:

      (1) the location of all outfalls for storm water discharges associated with concrete batch plants that are authorized under this permit;

      (2) a depiction of the drainage area and the direction of flow to the outfall(s);

      (3) structural controls used within the drainage area(s);

      (4) the locations of the following areas associated with concrete batch plants that are exposed to precipitation: vehicle and equipment maintenance activities (including fueling, repair, and storage areas for vehicles and equipment scheduled for maintenance); areas used for the treatment, storage, or disposal

of wastes; liquid storage tanks; material processing and storage areas; and loading and unloading areas; and

(5) the locations of the following: any bag house or other dust control device(s); recycle/sedimentation pond, clarifier or other device used for the treatment of facility wastewater (including the areas that drain to the treatment device); areas with significant materials; and areas where major spills or leaks have occurred.

(b) Inventory of Exposed Materials – A list of materials handled at the concrete batch plant that may be exposed to storm water and that have a potential to affect the quality of storm water discharges associated with concrete batch plants that are authorized under this general permit.

(c) Spills and Leaks - A list of significant spills and leaks of toxic or hazardous pollutants that occurred in areas exposed to storm water and that drain to storm water outfalls associated with concrete batch plants authorized under this general permit must be developed, maintained, and updated.

(d) Sampling Data - A summary of existing storm water discharge sampling data must be maintained, if available.

2. Measures and Controls - The SWP3 must include a description of management controls to regulate pollutants identified in the SWP3's "Description of Potential Pollutant Sources" from Part IV.B.1.(a) of this permit, and a schedule for implementation of the measures and controls. This must include, at a minimum:

(a) Good Housekeeping - Good housekeeping measures must be developed and implemented in the area(s) associated with concrete batch plants.

(1) Operators must prevent or minimize the discharge of spilled cement, aggregate (including sand or gravel), settled dust, or other significant materials from paved portions of the site that are exposed to storm water. Measures used to minimize the presence of these materials may include regular sweeping or other equivalent practices. These practices must be conducted at a frequency that is determined based on consideration of the amount of industrial activity occurring in the area and frequency of precipitation, and shall occur at least once per week when cement or aggregate is being handled or otherwise processed in the area.

(2) Operators must prevent the exposure of fine granular solids, such as cement, to storm water. Where practicable, these materials must be stored in enclosed silos, hoppers or buildings, in covered areas, or under covering.

(b) Spill Prevention and Response Procedures - Areas where potential spills that can contribute pollutants to storm water runoff, and the drainage areas from these locations, must be identified in the SWP3. Where appropriate, the SWP3 must specify material handling procedures, storage requirements, and use of equipment.

Procedures for cleaning up spills must be identified in the SWP3 and made available to the appropriate personnel.

(c) Inspections - Qualified facility personnel (i.e., a person or persons with knowledge of this general permit, the concrete batch plant, and the SWP3 related to the concrete batch plant(s) for the site) must be identified to inspect designated equipment and areas of the facility specified in the SWP3. The inspection frequency must be specified in the SWP3 based upon a consideration of the level of concrete production at the facility, but must be a minimum of once per month while the facility is in operation. The inspection must take place while the facility is in operation and must, at a minimum, include all areas that are exposed to storm water at the site, including material handling areas, above ground storage tanks, hoppers or silos, dust collection/containment systems, truck wash down and equipment cleaning areas. Follow-up procedures must be used to ensure that appropriate actions are taken in response to the inspections. Records of inspections must be maintained and be made readily available for inspection upon request.

(d) Employee Training - An employee training program must be developed to educate personnel responsible for implementing any component of the SWP3, or personnel otherwise responsible for storm water pollution prevention, with the provisions of the SWP3. The frequency of training must be documented in the SWP3, and at a minimum, must consist of one training prior to the initiation of operation of the concrete batch plant.

(e) Record Keeping and Internal Reporting Procedures - A description of spills and similar incidents, plus additional information that is obtained regarding the quality and quantity of storm water discharges, must be included in the SWP3. Inspection and maintenance activities must be documented and records of those inspection and maintenance activities must be incorporated in the SWP3.

(f) Management of Runoff - The SWP3 shall contain a narrative consideration for reducing the volume of runoff from concrete batch plants by diverting runoff or otherwise managing runoff, including use of infiltration, detention ponds, retention ponds, or reusing of runoff.

3. Comprehensive Compliance Evaluation – At least once per year, one or more qualified personnel (i.e., a person or persons with knowledge of this general permit, the concrete batch plant, and the SWP3 related to the concrete batch plant(s) for the site) shall conduct a compliance evaluation of the plant. The evaluation must include the following.

(a) Visual examination of all areas draining storm water associated with regulated concrete batch plants for evidence of, or the potential for, pollutants entering the drainage system. These include but are not limited to: cleaning areas, material handling areas, above ground storage tanks, hoppers or silos, dust collection/containment systems, and truck wash down and equipment cleaning areas. Measures implemented to reduce pollutants in runoff (including structural controls and implementation of management practices) must be evaluated to determine if they are effective and if they are implemented in accordance with the terms of this permit

and with the permittee's SWP3. The operator shall conduct a visual inspection of equipment needed to implement the SWP3, such as spill response equipment.

(b) Based on the results of the evaluation, the following must be revised as appropriate within two weeks of the evaluation: the description of potential pollutant sources identified in the SWP3 (as required in Part IV.B.1., "Description of Potential Pollutant Sources"); and pollution prevention measures and controls identified in the SWP3 (as required in Part IV.B.2., "Measures and Controls"). The revisions may include a schedule for implementing the necessary changes.

(c) The permittee shall prepare and include in the SWP3 a report summarizing the scope of the evaluation, the personnel making the evaluation, the date(s) of the evaluation, major observations relating to the implementation of the SWP3, and actions taken in response to the findings of the evaluation. The report must identify any incidents of noncompliance. Where the report does not identify incidences of noncompliance, the report must contain a statement that the evaluation did not identify any incidence(s), and the report must be signed according to 30 TAC Section 305.128, relating to Signatories to Reports.

(d) The Comprehensive Compliance Evaluation may substitute for one of the required inspections delineated in Part IV.B.2.(c) of this general permit.

### Section C. Prohibition of Wastewater Discharges

Wastewater discharges associated with concrete production including wastewater disposal by land application are not authorized under this general permit. These wastewater discharges must be authorized under an alternative TCEQ water quality permit or otherwise disposed of in an authorized manner. Discharges of concrete truck washout at construction sites may be authorized if conducted in accordance with the requirements of Part V of this general permit.

## Part V. Concrete Truck Wash Out Requirements

This general permit authorizes the wash out of concrete trucks at construction sites regulated under Sections II.E.1., 2., and 3. of this general permit, provided the following requirements are met. Authorization is limited to the land disposal of wash out water from concrete trucks that are associated with off-site production facilities. Wash out water associated with on-site concrete production facilities must be authorized under a separate TCEQ general permit or individual permit.

1. Direct discharge of concrete truck wash out water to surface water in the state, including discharge to storm sewers, is prohibited by this general permit.

2. Concrete truck wash out water shall be discharged to areas at the construction site where structural controls have been established to prevent direct discharge to surface waters, or to areas that have a minimal slope that allow infiltration and filtering of wash out water to prevent direct discharge to surface waters. Structural controls may consist of temporary berms, temporary shallow pits, temporary storage tanks with slow rate release, or other reasonable measures to prevent runoff from the construction site.

3. Wash out of concrete trucks during rainfall events shall be minimized. The direct discharge

of concrete truck wash out water is prohibited at all times, and the operator shall insure that its BMPs are sufficient to prevent the discharge of concrete truck washout as the result of rain.

4. The discharge of wash out water shall not cause or contribute to groundwater contamination.

5. If a SWP3 is required to be implemented, the SWP3 shall include concrete wash out areas on the associated map.

## Part VI. Retention of Records

The permittee must retain the following records for a minimum period of three (3) years from the date that a NOT is submitted as required by Part II.E.3. For activities in which an NOT is not required, records shall be retained for a minimum period of three (3) years from the date that the operator terminates coverage under Section II.F.3. of this permit. Records include:

1. A copy of the SWP3;

2. All reports and actions required by this permit, including a copy of the construction site notice;

3. All data used to complete the NOI, if an NOI is required for coverage under this general permit; and

4. All records of submittal of forms submitted to the operator of any MS4 receiving the discharge and to the secondary operator of a large construction site, if applicable.

## Part VII. Standard Permit Conditions

1. The permittee has a duty to comply with all permit conditions. Failure to comply with any permit condition is a violation of the permit and statutes under which it was issued, and is grounds for enforcement action, for terminating coverage under this general permit, or for requiring a discharger to apply for and obtain an individual TPDES permit.

2. Authorization under this general permit may be suspended or revoked for cause. Filing a notice of planned changes or anticipated non-compliance by the permittee does not stay any permit condition. The permittee must furnish to the executive director, upon request and within a reasonable time, any information necessary for the executive director to determine whether cause exists for revoking, suspending, or terminating authorization under this permit. Additionally, the permittee must provide to the executive director, upon request, copies of all records that the permittee is required to maintain as a condition of this general permit.

3. It is not a defense for a discharger in an enforcement action that it would have been necessary to halt or reduce the permitted activity to maintain compliance with the permit conditions.

4. Inspection and entry shall be allowed under Texas Water Code Chapters 26-28, Texas Health and Safety Code §§361.032-361.033 and 361.037, and 40 Code of Federal Regulations (CFR) §122.41(i). The statement in Texas Water Code §26.014 that commission entry of a facility shall occur according to an establishment's rules and regulations concerning safety, internal security, and

fire protection is not grounds for denial or restriction of entry to any part of the facility or site, but merely describes the commission's duty to observe appropriate rules and regulations during an inspection.

5. The discharger is subject to administrative, civil, and criminal penalties, as applicable, under Texas Water Code §§26.136, 26.212, and 26.213 for violations including but not limited to the following:

   a. negligently or knowingly violating the federal Clean Water Act (CWA), §§301, 302, 306, 307, 308, 318, or 405, or any condition or limitation implementing any sections in a permit issued under CWA, §402, or any requirement imposed in a pretreatment program approved under CWA, §§402(a)(3) or 402(b)(8);

   b. knowingly making any false statement, representation, or certification in any record or other document submitted or required to be maintained under a permit, including monitoring reports or reports of compliance or noncompliance.

6. All reports and other information requested by the executive director must be signed by the person and in the manner required by 30 TAC §305.128 (relating to Signatories to Reports).

7. Authorization under this general permit does not convey property or water rights of any sort and does not grant any exclusive privilege.

**Part VIII. Fees**

1. A fee of must be submitted along with the NOI:

   a. $325 if submitting a paper NOI, or
   b. $225 if submitting a NOI electronically.

2. Fees are due upon submission of the NOI. An NOI will not be declared administratively complete unless the associated fee has been paid in full.

3. No separate annual fees will be assessed. The Water Quality Annual fee has been incorporated into the NOI fees as described above.

**Appendix A: Automatic Authorization**

Periods of Low Erosion Potential by County – Eligible Date Ranges

Andrews: Nov. 15 - Apr. 30
Archer: Dec. 15 - Feb. 14
Armstrong: Nov. 15 - Apr. 30
Bailey: Nov. 1 - Apr. 30, or Nov. 15 - May 14
Baylor: Dec. 15 - Feb. 14
Borden: Nov. 15 - Apr. 30
Brewster: Nov. 15 - Apr. 30
Briscoe: Nov. 15 - Apr. 30
Brown: Dec. 15 - Feb. 14
Callahan: Dec. 15 - Feb. 14
Carson: Nov. 15 - Apr. 30
Castro: Nov. 15 - Apr. 30
Childress: Dec. 15 - Feb. 14
Cochran: Nov. 1 - Apr. 30, or Nov. 15 - May 14
Coke: Dec. 15 - Feb. 14
Coleman: Dec. 15 - Feb. 14
Collingsworth: Jan. 1 - Mar. 30, or Dec. 1 - Feb. 28
Concho: Dec. 15 - Feb. 14
Cottle: Dec. 15 - Feb. 14
Crane: Nov. 15 - Apr. 30
Crockett: Nov. 15 - Jan. 14, or Feb. 1 - Mar. 30
Crosby: Nov. 15 - Apr. 30
Culberson: Nov. 1 - May 14
Dallam: Nov. 1 - Apr. 14, or Nov. 15 - Apr. 30
Dawson: Nov. 15 - Apr. 30
Deaf Smith: Nov. 15 - Apr. 30
:kens: Nov. 15 - Jan. 14, or Feb. 1 - Mar. 30
Dimmit: Dec. 15 - Feb. 14
Donley: Jan. 1 - Mar. 30, or Dec. 1 - Feb. 28
Eastland: Dec. 15 - Feb. 14
Ector: Nov. 15 - Apr. 30
Edwards: Dec. 15 - Feb. 14
El Paso: Jan. 1 - Jul. 14, or May 15 - Jul. 31, or Jun. 1 - Aug. 14, or Jun. 15 - Sept. 14, or Jul. 1 - Oct. 14, or Jul. 15 - Oct. 31, or Aug. 1 - Apr. 30, or Aug. 15 - May 14, or Sept. 1 - May 30, or Oct. 1 - Jun. 14, or Nov. 1 - Jun. 30, or Nov. 15 - Jul. 14
Fisher: Dec. 15 - Feb. 14
Floyd: Nov. 15 - Apr. 30
Foard: Dec. 15 - Feb. 14
Gaines: Nov. 15 - Apr. 30
Garza: Nov. 15 - Apr. 30
Glasscock: Nov. 15 - Apr. 30
Hale: Nov. 15 - Apr. 30
Hall: Feb. 1 - Mar. 30
Hansford: Nov. 15 - Apr. 30
Hardeman: Dec. 15 - Feb. 14
Hartley: Nov. 15 - Apr. 30
Haskell: Dec. 15 - Feb. 14
Hockley: Nov. 1 - Apr. 14, or Nov. 15 - Apr. 30
Howard: Nov. 15 - Apr. 30
Hudspeth: Nov. 1 - May 14
Hutchinson: Nov. 15 - Apr. 30
Irion: Dec. 15 - Feb. 14
f Davis: Nov. 1 - Apr. 30 or Nov. 15 - May 14
.ies: Dec. 15 - Feb. 14
Kent: Nov. 15 - Jan. 14 or Feb. 1 - Mar. 30
Kerr: Dec. 15 - Feb. 14
Kimble: Dec. 15 - Feb. 14
King: Dec. 15 - Feb. 14
Kinney: Dec. 15 - Feb. 14
Knox: Dec. 15 - Feb. 14
Lamb: Nov. 1 - Apr. 14, or Nov. 15 - Apr. 30
Loving: Nov. 1 - Apr. 30, or Nov. 15 - May 14
Lubbock: Nov. 15 - Apr. 30
Lynn: Nov. 15 - Apr. 30
Martin: Nov. 15 - Apr. 30
Mason: Dec. 15 - Feb. 14
Maverick: Dec. 15 - Feb. 14
McCulloch: Dec. 15 - Feb. 14
Menard: Dec. 15 - Feb. 14
Midland: Nov. 15 - Apr. 30
Mitchell: Nov. 15 - Apr. 30
Moore: Nov. 15 - Apr. 30
Motley: Nov. 15 - Jan. 14, or Feb. 1 - Mar. 30
Nolan: Dec. 15 - Feb. 14
Oldham: Nov. 15 - Apr. 30
Parmer: Nov. 1 - Apr. 14, or Nov. 15 - Apr. 30
Pecos: Nov. 15 - Apr. 30
Potter: Nov. 15 - Apr. 30
Presidio: Nov. 1 - Apr. 30, or Nov. 15 - May 14
Randall: Nov. 15 - Apr. 30
Reagan: Nov. 15 - Apr. 30
Real: Dec. 15 - Feb. 14
Reeves: Nov. 1 - Apr. 30, or Nov. 15 - May 14
Runnels: Dec. 15 - Feb. 14
Schleicher: Dec. 15 - Feb. 14
Scurry: Nov. 15 - Apr. 30
Shackelford: Dec. 15 - Feb. 14
Sherman: Nov. 15 - Apr. 30
Stephens: Dec. 15 - Feb. 14
Sterling: Nov. 15 - Apr. 30
Stonewall: Dec. 15 - Feb. 14
Sutton: Dec. 15 - Feb. 14
Swisher: Nov. 15 - Apr. 30
Taylor: Dec. 15 - Feb. 14
Terrell: Nov. 15 - Apr. 30
Terry: Nov. 15 - Apr. 30
Throckmorton: Dec. 15 - Feb. 14
Tom Green: Dec. 15 - Feb. 14
Upton: Nov. 15 - Apr. 30
Uvalde: Dec. 15 - Feb. 14
Val Verde: Nov. 15 - Jan. 14, or Feb. 1 - Mar. 30
Ward: Nov. 1 - Apr. 14, or Nov. 15 - Apr. 30
Wichita: Dec. 15 - Feb. 14
Wilbarger: Dec. 15 - Feb. 14
Winkler: Nov. 1 - Apr. 30, or Nov. 15 - May 14
Yoakum: Nov. 1 - Apr. 30, or Nov. 15 - May 14
Young: Dec. 15 - Feb. 14
Wheeler: Jan. 1 - Mar. 30, or Dec. 1 - Feb. 28
Zavala: Dec. 15 - Feb. 14

## Appendix B:
## Erosivity Index (EI) Zones in Texas

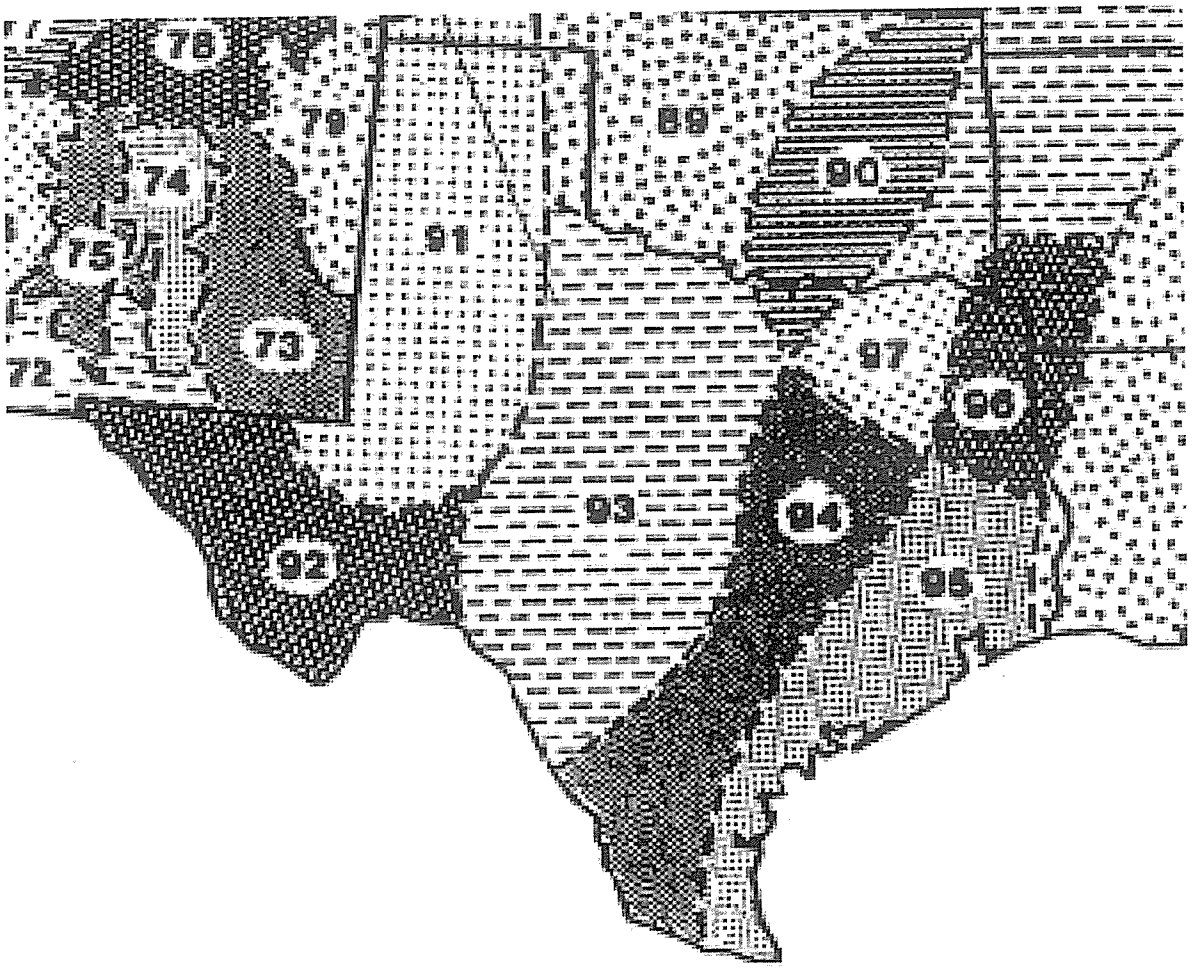


*Adapted from Chapter 2 of USDA Agriculture Handbook 703: "Predicting Soil Erosion by Water: A Guide to Conservation Planning With the Revised Universal Soil Loss Equation (RUSLE)," U.S. Department of Agriculture, Agricultural Research Service*

## Appendix C: Isoerodent Map

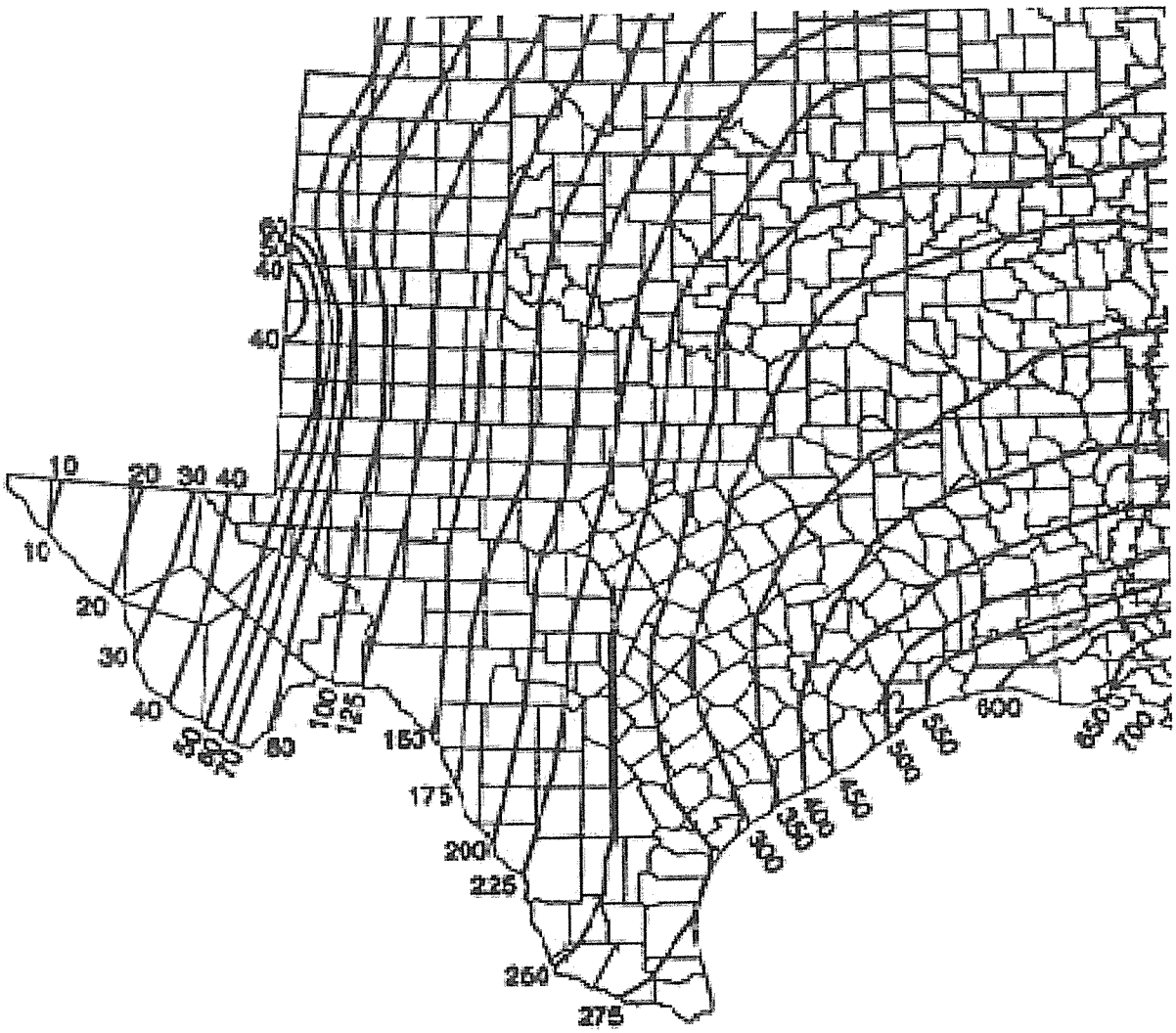


*Adapted from Chapter 2 of USDA Agriculture Handbook 703: "Predicting Soil Erosion by Water: A Guide to Conservation Planning With the Revised Universal Soil Loss Equation (RUSLE)," U.S. Department of Agriculture, Agricultural Research Service*

# Appendix D: Erosivity Indices for EI Zones in Texas

**Periods:**

| EI#: | 1/1 | 1/15 | 2/1 | 2/15 | 3/1 | 3/15 | 4/1 | 4/15 | 5/1 | 5/15 | 6/1 | 6/15 | 7/1 | 7/15 | 8/1 | 8/15 | 9/1 | 9/15 | 10/1 | 10/15 | 11/1 | 11/15 | 12/1 | 12/15 |
|---|---|---|---|---|---|---|---|---|---|---|---|---|---|---|---|---|---|---|---|---|---|---|---|---|
| ***89*** | 0 | 0 | 1 | 1 | 2 | 3 | 4 | 7 | 12 | 18 | 27 | 38 | 48 | 55 | 62 | 69 | 76 | 83 | 90 | 94 | 97 | 98 | 99 | 100 |
| ***90*** | 0 | 1 | 2 | 3 | 4 | 6 | 8 | 13 | 21 | 29 | 37 | 46 | 54 | 60 | 65 | 69 | 74 | 81 | 87 | 92 | 95 | 97 | 98 | 99 |
| ***91*** | 0 | 0 | 0 | 0 | 1 | 1 | 1 | 2 | 6 | 16 | 29 | 39 | 46 | 53 | 60 | 67 | 74 | 81 | 88 | 95 | 99 | 99 | 100 | 100 |
| ***92*** | 0 | 0 | 0 | 0 | 1 | 1 | 1 | 2 | 6 | 16 | 29 | 39 | 46 | 53 | 60 | 67 | 74 | 81 | 88 | 95 | 99 | 99 | 100 | 100 |
| ***93*** | 0 | 1 | 1 | 2 | 3 | 4 | 6 | 8 | 13 | 25 | 40 | 49 | 56 | 62 | 67 | 72 | 76 | 80 | 85 | 91 | 97 | 98 | 99 | 99 |
| ***94*** | 0 | 1 | 2 | 4 | 6 | 8 | 10 | 15 | 21 | 29 | 38 | 47 | 53 | 57 | 61 | 65 | 70 | 76 | 83 | 88 | 91 | 94 | 96 | 98 |
| ***95*** | 0 | 1 | 3 | 5 | 7 | 9 | 11 | 14 | 18 | 27 | 35 | 41 | 46 | 51 | 57 | 62 | 68 | 73 | 79 | 84 | 89 | 93 | 96 | 98 |
| ***96*** | 0 | 2 | 4 | 6 | 9 | 12 | 17 | 23 | 30 | 37 | 43 | 49 | 54 | 58 | 62 | 66 | 70 | 74 | 78 | 82 | 86 | 90 | 94 | 97 |
| ***97*** | 0 | 1 | 3 | 5 | 7 | 10 | 14 | 20 | 28 | 37 | 48 | 56 | 61 | 64 | 68 | 72 | 77 | 81 | 86 | 89 | 92 | 95 | 98 | 99 |
| ***106*** | 0 | 3 | 6 | 9 | 13 | 17 | 21 | 27 | 33 | 38 | 44 | 49 | 55 | 61 | 67 | 71 | 75 | 78 | 81 | 84 | 86 | 90 | 94 | 97 |

* Each period begins on the date listed in the table above and lasts until the day before the following period. The final period begins on December 15 and ends on December 31.

*Table adapted from Chapter 2 of USDA Agriculture Handbook 703: "Predicting Soil Erosion by Water: A Guide to Conservation Planning With the Revised Universal Soil Loss Equation (RUSLE)," U.S. Department of Agriculture, Agricultural Research Service*

Attachment 1

# SMALL CONSTRUCTION SITE NOTICE: LOW POTENTIAL FOR EROSION

**FOR THE**

**Texas Commission on Environmental Quality (TCEQ)**

**Storm Water Program**

## TPDES GENERAL PERMIT TXR150000

The following information is posted in compliance with **Part II.E.1.** of the TCEQ General Permit Number TXR150000 for discharges of storm water runoff from small construction sites automatically authorized based on low rainfall erosivity. Additional information regarding the TCEQ storm water permit program may be found on the internet at:
http://www.tceq.state.tx.us/nav/permits/wq_construction.html

| | |
|---|---|
| Operator Name: | |
| Contact Name and Phone Number: | |
| Project Description:<br>(Physical address or description of the site's location, estimated start date and projected end date, or date that disturbed soils will be stabilized) | |

For Small Construction Sites Authorized Under Part II.E.1., the following certification must be completed:

I _____ (Typed or Printed Name Person Completing This Certification) certify under penalty of law that I have read and understand the eligibility requirements for claiming an automatic authorization based on low rainfall erosivity under Part II.E.1. of TPDES General Permit TXR150000 and agree to comply with the terms of this permit. Construction activities at this site shall occur within a time period listed in Appendix A of the TPDES general permit for this county, that period beginning on _____and ending on _____. I understand that if construction activities continue past this period, all storm water runoff must be authorized under a separate provision of the general permit. A copy of this signed notice is supplied to the operator of the MS4 if discharges enter an MS4. I am aware there are significant penalties for providing false information or for conducting unauthorized discharges, including the possibility of fine and imprisonment for knowing violations.

Signature and Title _____ Date_____

_____*Date Notice Removed*
____*MS4 operator notified per Part II.F.3.*

# SMALL CONSTRUCTION SITE NOTICE

**FOR THE**
**Texas Commission on Environmental Quality (TCEQ)**
**Storm Water Program**

## TPDES GENERAL PERMIT TXR150000

The following information is posted in compliance with **Part II.E.2.** of the TCEQ General Permit Number TXR150000 for discharges of storm water runoff from small construction sites. Additional information regarding the TCEQ storm water permit program may be found on the internet at:
http://www.tceq.state.tx.us/nav/permits/wq_construction.html

| | |
|---|---|
| Operator Name: | |
| Contact Name and Phone Number: | |
| Project Description: *Physical address or description of the site's location, estimated start date and projected end date, or date that disturbed soils will be stabilized* | |
| Location of Storm Water Pollution Prevention Plan: | |

For Small Construction Activities Authorized Under Part II.E.2. (Obtaining Authorization to Discharge) the following certification must be completed:

I _____ (Typed or Printed Name Person Completing This Certification) certify under penalty of law that I have read and understand the eligibility requirements for claiming an authorization under Part II.D.2. of TPDES General Permit TXR150000 and agree to comply with the terms of this permit. A storm water pollution prevention plan has been developed and will be implemented prior to construction, according to permit requirements. A copy of this signed notice is supplied to the operator of the MS4 if discharges enter an MS4. I am aware there are significant penalties for providing false information or for conducting unauthorized discharges, including the possibility of fine and imprisonment for knowing violations.

Signature and Title_____ Date _____

_____*Date Notice Removed*
____*MS4 operator notified per Part II.F.3.*

Attachment 3

# LARGE CONSTRUCTION SITE NOTICE

**FOR THE**
**Texas Commission on Environmental Quality (TCEQ)**
**Storm Water Program**

## TPDES GENERAL PERMIT TXR150000

## *"SECONDARY OPERATOR" NOTICE*

This notice applies to secondary operators of construction sites operating under Part II.E.3. of the TPDES General Permit Number TXR150000 for discharges of storm water runoff from construction sites equal to or greater than five acres, including the larger common plan of development. The information on this notice is required in Part III.E.2. of the general permit. Additional information regarding the TCEQ storm water permit program may be found on the internet at: http://www.tceq.state.tx.us/nav/permits/sw_permits.html

| | |
|---|---|
| Site-Specific TPDES Authorization Number: | |
| Operator Name: | |
| Contact Name and Phone Number: | |
| Project Description: *Physical address or description of the site's location, and estimated start date and projected end date, or date that disturbed soils will be stabilized.* | |
| Location of Storm Water Pollution Prevention Plan (SWP3): | |

For Large Construction Activities Authorized Under Part II.E.3. (Obtaining Authorization to Discharge) the following certification must be completed:

I _____ (Typed or Printed Name Person Completing This Certification) certify under penalty of law that I have read and understand the eligibility requirements for claiming an authorization under Part II.E.2. of TPDES General Permit TXR150000 and agree to comply with the terms of this permit. A storm water pollution prevention plan has been developed and will be implemented prior to construction, according to permit requirements. A copy of this signed notice is supplied to the operator of the MS4 if discharges enter an MS4. I am aware there are significant penalties for providing false information or for conducting unauthorized discharges, including the possibility of fine and imprisonment for knowing violations.

Signature and Title_____ Date _____

_____*Date Notice Removed*
____*MS4 operator notified per Part II.F.3.*

Attachment 4

# LARGE CONSTRUCTION SITE NOTICE

**FOR THE**
**Texas Commission on Environmental Quality (TCEQ)**
**Storm Water Program**

## TPDES GENERAL PERMIT TXR150000

## *"PRIMARY OPERATOR" NOTICE*

This notice applies to construction sites operating under Part II.E.3. of the TPDES General Permit Number TXR150000 for discharges of storm water runoff from construction sites equal to or greater than five acres, including the larger common plan of development. The information on this notice is required in Part III.E.2. of the general permit. This notice shall be posted along with a copy of the signed Notice of Intent (NOI), as applicable. Additional information regarding the TCEQ storm water permit program may be found on the internet at: http://www.tceq.state.tx.us/nav/permits/sw_permits.html

| | |
|---|---|
| Site-Specific TPDES Authorization Number: | |
| Operator Name: | |
| Contact Name and Phone Number: | |
| Project Description: *Physical address or description of the site's location, and estimated start date and projected end date, or date that disturbed soils will be stabilized.* | |
| Location of Storm Water Pollution Prevention Plan: | |

# APPENDIX B

## TEXAS COMMISION ON ENVIRONMENTAL QUALITY (TCEQ) NOI & NOT

**TCEQ Office Use Only**
Permit No.:
RN:
CN:
Region:

# TCEQ Notice of Intent (NOI) for Stormwater Discharges Associated with Construction Activity under TPDES General Permit (TXR150000)

**IMPORTANT:**

- Use the INSTRUCTIONS to fill out each question in this form.
- Use the CHECKLIST to make certain all you filled out all required information. Incomplete applications **WILL** delay approval or result in automatic denial.
- Once processed your permit can be viewed at: http://www2.tceq.texas.gov/wq_dpa/index.cfm

**ePERMITS:** Sign up now for online NOI: https://www3.tceq.texas.gov/steers/index.cfm
Pay a $225 reduced application fee by using ePermits.

**APPLICATION FEE:**

- You must pay the **$325** Application Fee to TCEQ for the paper application to be complete.
- Payment and NOI must be mailed to separate addresses.
- Did you know you can pay on line?
  - Go to https://www3.tceq.texas.gov/epay/index.cfm
  - Select Fee Type: GENERAL PERMIT CONSTRUCTION STORM WATER DISCHARGE NOI APPLICATION
- **Provide your payment information below, for verification of payment:**

☐ Mailed Check/Money Order No.: _____
Name Printed on Check: _____
☐ EPAY Voucher No.: _____
Is the Payment Voucher copy attached? ☐ Yes

**RENEWAL: Is this NOI a Renewal of an existing General Permit Authorization? (Note: A permit cannot be renewed after June 3, 2013.)**

☐ Yes The Permit number is: TXR15_____
**(If a permit number is not provided, a new number will be assigned.)**
☐ No

## 1) OPERATOR (Applicant)

**a)** If the applicant is currently a customer with TCEQ, what is the Customer Number (CN) issued to this entity? You may search for your CN at: http://www12.tceq.texas.gov/crpub/index.cfm?fuseaction=cust.CustSearch

CN 600128995

**b)** What is the Legal Name of the entity (applicant) applying for this permit?
City of Houston Department of Public Works and Engineering
(The legal name must be spelled exactly as filed with the Texas Secretary of State, County, or in the legal document forming the entity.)

**c)** What is the name and title of the person signing the application? The person must be an executive official meeting signatory requirements in TAC 305.44(a).
Prefix (Mr. Ms. Miss): Mr.
First/Last Name: Tim Lincoln P.E. Suffix: _____
Title: City Engineer Credential: _____

**d)** What is the Operator Contact's (Responsible Authority) contact information and mailing address as recognized by the US Postal Service (USPS)? You may verify the address at: http://zip4.usps.com/zip4/welcome.jsp
Phone #: _____ ext: _____ Fax #: _____
E-mail: tim.lincoln@houstontx.gov
Mailing Address: 1002 Washington Ave
Internal Routing (Mail Code, Etc.): _____
City: Houston State: Texas ZIP Code: 77002
If outside USA: Territory: _____ Country Code: _____ Postal Code: _____

**e)** Indicate the type of Customer (The instructions will help determine your customer type):

| | | |
|---|---|---|
| ☐ Individual | ☐ Limited Partnership | ☐ Sole Proprietorship-DBA |
| ☐ Joint Venture | ☐ General Partnership | ☐ Corporation |
| ☐ Trust | ☐ Estate | ☐ Federal Government |
| ☐ State Government | ☐ County Government | ☒ City Government |
| ☐ Other Government | | |

**f)** Independent Operator? ☐ Yes ☒ No
(If governmental entity, subsidiary, or part of a larger corporation, check "No".)

**g)** Number of Employees:
☐ 0-20; ☐ 21-100; ☐ 101-250; ☐ 251-500; or ☒ 501 or higher

**h)** Customer Business Tax and Filing Numbers:
(REQUIRED for Corporations and Limited Partnerships. Not Required for Individuals, Government, or Sole Proprietors)
State Franchise Tax ID Number: _____
Federal Tax ID: _____
Texas Secretary of State Charter (filing) Number: _____
DUNS Number (if known): _____

## 2) APPLICATION CONTACT

If TCEQ needs additional information regarding this application, who should be contacted?

Is the application contact the same as the applicant identified above?

☐ Yes, go to Section 3). ☐ No, complete section below.

Prefix (Mr. Ms. Miss): Mr.
First/Last Name: Kyle Bertrand P.E. Suffix: _____
Title: Project Manager Credential: _____

Organization Name: CLR, Inc,
Phone No.: (713) 462-0993 ext: 18 Fax Number:
E-mail: kbertrand@clri.com
Mailing Address: 19530 FM 362
Internal Routing (Mail Code, Etc.):
City: Waller State: Texas ZIP Code: 77484
Mailing Information if outside USA:
Territory: Country Code: Postal Code:

## 3) REGULATED ENTITY (RE) INFORMATION ON PROJECT OR SITE

If the site of your business is part of a larger business site or if other businesses were located at this site before yours, a Regulated Entity Number (RN) may already be assigned for the larger site. Use the RN assigned for the larger site. Search TCEQ's Central Registry to see if the larger site may already be registered as a regulated site at: http://www12.tceq.texas.gov/crpub/index.cfm?fuseaction=regent.RNSearch.

If the site is found, provide the assigned Regulated Entity Reference Number and provide the information for the site to be authorized through this application below. The site information for this authorization may vary from the larger site information.

**a)** TCEQ issued RE Reference Number (RN): RN

**b)** Name of project or site (the name known by the community where located):
Buffalo Speedway Paving and Drainage from West Airport Boulevard to Holmes Road

**c)** In your own words, briefly describe the primary business of the Regulated Entity: (Do not repeat the SIC and NAICS code):

**d)** County (or counties if > 1) Harris

**e)** Latitude: 29D38'59" N Longitude: 95D25'49" W

**f)** Does the site have a physical address?
☐ Yes, complete Section A for a physical address.
☒ No, complete Section B for site location information.

***Section A:*** Enter the physical address for the site.
Verify the address with USPS. If the address is not recognized as a delivery address, provide the address as identified for overnight mail delivery, 911 emergency or other online map tools to confirm an address.

Physical Address of Project or Site:
Street Number: Street Name:
City: State: Texas ZIP Code:

***Section B:*** Enter the site location information.
If no physical address (Street Number & Street Name), provide a written location access description to the site. (Ex.: located 2 miles west from intersection of Hwy 290 & IH35 accessible on Hwy 290 South)

Located in between Holmes Road and West Airport Boulevard 2 miles east of Holmes Road and Hwy 90 Alt

City where the site is located or, if not in a city, what is the nearest city:
Houston

State: Texas ZIP Code where the site is located: 77045

## 4) GENERAL CHARACTERISTICS

**a)** Is the project/site located on Indian Country Lands?

☐ Yes - If the answer is Yes, you must obtain authorization through EPA, Region 6.

☒ No

**b)** Is your construction activity associated with a facility that, when completed, would be associated with the exploration, development, or production of oil or gas or geothermal resources?

☐ Yes - If the answer is Yes, you may be under jurisdiction of the Railroad Commission of Texas and may need to obtain authorization through EPA, Region 6.

☒ No

**c)** What is the Primary Standard Industrial Classification (SIC) Code that best describes the construction activity being conducted at the site?
Primary SIC Code: _____

**d)** If applicable, what is the Secondary SIC Code(s): _____

**e)** What is the total number of acres disturbed? 62

**f)** Is the project site part of a larger common plan of development or sale?

☐ Yes - If the answer is Yes, the total number of acres disturbed can be less than 5 acres.

☒ No - If the answer is No, the total number of acres disturbed must be 5 or more. If the total number of acres disturbed is less than 5 then the project site does not qualify for coverage through this Notice of Intent. Coverage will be denied. See the requirements in the general permit for small construction sites.

**g)** What is the name of the first water body(s) to receive the stormwater runoff or potential runoff from the site?
Sims Bayou

**h)** What is the segment number(s) of the classified water body(s) that the discharge will eventually reach?
HCFCD C100-00-00

i) Is the discharge into an MS4?

- [x] Yes - If the answer is Yes, provide the name of the MS4 operator below.
- [ ] No

If Yes, provide the name of the MS4 operator:
City of Houston

Note: The general permit requires you to send a copy of the NOI to the MS4 operator.

j) Are any of the surface water bodies receiving discharges from the construction site on the latest EPA-approved CWA 303(d) List of impaired waters?

- [x] Yes - If the answer is Yes, provide the name(s) of the impaired water body(s) below.
- [ ] No

If Yes, provide the name(s) of the impaired water body(s):
Sims Bayou

k) Is the discharge or potential discharge within the Recharge Zone, Contributing Zone, or Contributing Zone within the Transition Zone of the Edwards Aquifer as defined in 30 TAC Chapter 213?

- [ ] Yes - If the answer is Yes, complete certification below by checking "Yes."
- [x] No

I certify that a copy of the TCEQ approved Plan required by the Edwards Aquifer Rule (30 TAC Chapter 213) is either included or referenced in the Stormwater Pollution Prevention Plan.

- [ ] Yes

## 5) CERTIFICATION

Check Yes to the certifications below. Failure to indicate Yes to ***ALL*** items may result in denial of coverage under the general permit.

**a)** I certify that I have obtained a copy and understand the terms and conditions of the Construction General Permit (TXR150000). ☐ Yes

**b)** I certify that the full legal name of the entity applying for this permit has been provided and is legally authorized to do business in Texas. ☐ Yes

**c)** I understand that a Notice of Termination (NOT) must be submitted when this authorization is no longer needed. ☐ Yes

**d)** I certify that a Stormwater Pollution Prevention Plan has been developed, will be implemented prior to construction and to the best of my knowledge and belief is compliant with any applicable local sediment and erosion control plans, as required in the general permit TXR150000. Note: For multiple operators who prepare a shared SWP3, the confirmation of an operator may be limited to its obligations under the SWP3 provided all obligations are confirmed by at least one operator. ☐ Yes

**Operator Certification:**

I,_____ _____

Typed or printed name Title

certify under penalty of law that this document and all attachments were prepared under my direction or supervision in accordance with a system designed to assure that qualified personnel properly gather and evaluate the information submitted. Based on my inquiry of the person or persons who manage the system, or those persons directly responsible for gathering the information, the information submitted is, to the best of my knowledge and belief, true, accurate, and complete. I am aware there are significant penalties for submitting false information, including the possibility of fine and imprisonment for knowing violations.

I further certify that I am authorized under 30 Texas Administrative Code 305.44 to sign and submit this document, and can provide documentation in proof of such authorization upon request.

Signature: _____ Date:_____

*(Use blue ink)*

# NOTICE OF INTENT CHECKLIST (TXR150000)

- Did you complete everything? Use this checklist to be sure!
- Are you ready to mail your form to TCEQ? Go to the General Information Section of the Instructions for mailing addresses.

This checklist is for use by the operator to ensure a complete application. Missing information may result in denial of coverage under the general permit. (See NOI process description in the Instructions)

## Application Fee:

If paying by Check:

- ☐ Check was mailed **separately** to the TCEQs Cashier's Office. (See Instructions for Cashier's address and Application address.)
- ☐ Check number and name on check is provided in this application.

If using ePay:

- ☐ The voucher number is provided in this application or a copy of the voucher is attached.

## PERMIT NUMBER:

- ☐ Permit number provided – if this application is for renewal of an existing authorization.

## OPERATOR INFORMATION - Confirm each item is complete:

- ☐ Customer Number (CN) issued by TCEQ Central Registry
- ☐ Legal name as filed to do business in Texas (Call TX SOS 512/463-5555)
- ☐ Name and title of responsible authority signing the application
- ☐ Mailing address is complete & verifiable with USPS. www.usps.com
- ☐ Phone numbers/e-mail address
- ☐ Type of operator (entity type)
- ☐ Independent operator
- ☐ Number of employees
- ☐ For corporations or limited partnerships – Tax ID and SOS filing numbers
- ☐ Application contact and address is complete & verifiable with USPS. http://www.usps.com

## REGULATED ENTITY (RE) INFORMATION ON PROJECT OR SITE - Confirm each item is complete:

- ☐ Regulated Entity Reference Number (RN) (if site is already regulated by TCEQ)
- ☐ Site/project name/regulated entity
- ☐ Latitude and longitude http://www.tceq.texas.gov/gis/sqmaview.html
- ☐ County
- ☐ Site/project physical address. Do not use a rural route or post office box.
- ☐ Business description

## GENERAL CHARACTERISTICS - Confirm each item is complete:

- ☐ Indian Country Lands –the facility is not on Indian Country Lands
- ☐ Construction activity related to facility associated to oil, gas, or geothermal resources
- ☐ Standard Industrial Classification (SIC) Code www.osha.gov/oshstats/sicser.html
- ☐ Acres disturbed is provided and qualifies for coverage through a NOI
- ☐ Common plan of development or sale
- ☐ Receiving water body(s)
- ☐ Segment number(s)
- ☐ Impaired water body(s)
- ☐ MS4 operator
- ☐ Edwards Aquifer rule

## CERTIFICATION

- ☐ Certification statements have been checked indicating "Yes"
- ☐ Signature meets 30 Texas Administrative Code (TAC) 305.44 and is original.

# Notice of Intent (NOI) for Stormwater Discharges Associated with Construction Activity under TPDES General Permit (TXR150000)

General Information and Instructions

## GENERAL INFORMATION

### Where to Send the Notice of Intent (NOI):

BY REGULAR U.S. MAIL
Texas Commission on
Environmental Quality
Stormwater Processing Center
(MC228)
P.O. Box 13087
Austin, Texas 78711-3087

BY OVERNIGHT/EXPRESS MAIL
Texas Commission on
Environmental Quality
Stormwater Processing Center
(MC228)
12100 Park 35 Circle
Austin, TX 78753

### TCEQ Contact List:

| | |
|---|---|
| Application – status and form questions: | *512/239-3700, swpermit@tceq.texas.gov* |
| Technical questions: | *512/239-4671, swgp@tceq.texas.gov* |
| Environmental Law Division: | *512/239-0600* |
| Records Management - obtain copies of forms: | *512/239-0900* |
| Reports from databases (as available): | *512/239-DATA (3282)* |
| Cashier's office: | *512/239-0357 or 512/239-0187* |

### Notice of Intent Process:

When your NOI is received by the program, the form will be processed as follows:

1) **Administrative Review:** Each item on the form will be reviewed for a complete response. In addition, the operator's legal name must be verified with Texas Secretary of State as valid and active (if applicable). The address(s) on the form must be verified with the US Postal service as receiving regular mail delivery. Never give an overnight/express mailing address.

2) **Notice of Deficiency:** If an item is incomplete or not verifiable as indicated above, a notice of deficiency (NOD) will be mailed to the operator. The operator will have 30 days to respond to the NOD. The response will be reviewed for completeness.

3) **Acknowledgment of Coverage:** An Acknowledgment Certificate will be mailed to the operator. This certificate acknowledges coverage under the general permit.
   -or-
   **Denial of Coverage:** If the operator fails to respond to the NOD or the response is inadequate, coverage under the general permit may be denied. If coverage is denied, the operator will be notified.

### General Permit (Your Permit)

For NOIs submitted **electronically** through ePermits, provisional coverage under the general permit begins immediately following confirmation of receipt of the NOI form by the TCEQ.

For **paper** NOIs, provisional coverage under the general permit begins **7 days after a completed NOI is postmarked for delivery** to the TCEQ.

You should have a copy of your general permit when submitting your application. You may view and print your permit for which you are seeking coverage, on the TCEQ web site http://www.tceq.texas.gov. Search using key word TXR150000.

## General Permit Forms

The Notice of Intent (NOI), Notice of Termination (NOT), and Notice of Change (NOC) (including instructions) are available in Adobe Acrobat PDF format on the TCEQ web site http://www.tceq.texas.gov.

## Change in Operator

An authorization under the general permit is not transferable. If the operator of the regulated entity changes, the present permittee must submit a Notice of Termination and the new operator must submit a Notice of Intent. The NOT and NOI must be submitted no later than 10 days prior to the change in Operator status.

## TCEQ Central Registry Core Data Form

The Core Data Form has been incorporated into this form. Do not send a Core Data Form to TCEQ. After final acknowledgment of coverage under the general permit, the program will assign a Customer Number and Regulated Entity Number.

You can find the information on the Central Registry web site at http://www12.tceq.texas.gov/crpub/index.cfm. You can search by the Regulated Entity (RN), Customer Number (CN) or Name (Permittee), or by your permit number under the search field labeled "Additional ID". Capitalize all letters in the permit number.

The Customer (Permittee) is responsible for providing consistent information to the TCEQ, and for updating all CN and RN data for all authorizations as changes occur. For General Permits, a Notice of Change form must be submitted to the program area.

## Fees associated with a General Permit

Payment of the fee may be made by check or money order, payable to TCEQ, or through EPAY (electronic payment through the web).

***Application Fee:*** This fee is required to be paid at the time the NOI is submitted. Failure to submit payment at the time the application is filed will cause delays in acknowledgment or denial of coverage under the general permit.

Mailed Payments:
Payment must be mailed under separate cover at one of the addresses below using the attached Application Fee submittal form. (DO NOT SEND A COPY OF THE NOI WITH THE APPLICATION FEE SUBMITTAL FORM)

BY REGULAR U.S. MAIL
Texas Commission on Environmental Quality
Financial Administration Division
Cashier's Office, MC-214
P.O. Box 13088
Austin, TX 78711-3088

BY OVERNIGHT/EXPRESS MAIL
Texas Commission on Environmental Quality
Financial Administration Division
Cashier's Office, MC-214
12100 Park 35 Circle
Austin, TX 78753

ePAY Electronic Payment: http://www.tceq.texas.gov/epay

When making the payment you must select Water Quality, and then select the fee category "General Permit Construction Storm Water Discharge NOI Application". You must include a copy of the payment voucher with your NOI. Your NOI will not be considered complete without the payment voucher.

## INSTRUCTIONS FOR FILLING OUT THE NOI FORM

**Renewal of General Permit.** Dischargers holding active authorizations under the expired General Permit are required to submit a NOI to continue coverage. The existing permit number is required. If the permit number is not provided or has been terminated, expired, or denied a new permit number will be issued.

### 1. Operator (Applicant)

**a) Enter assigned Customer Number (CN)**
TCEQ's Central Registry will assign each customer a number that begins with CN, followed by nine digits. **This is not a permit number, registration number, or license number.**
If this customer has not been assigned a CN, leave the space for the CN blank.
If this customer has already been assigned this number, enter the permittee's CN.

**b) Legal Name**
Provide the current legal name of the permittee, as authorized to do business in Texas. The name must be provided exactly as filed with the Texas Secretary of State (SOS), or on other legal documents forming the entity, that is filed in the county where doing business. You may contact the SOS at 512/463-5555, for more information related to filing in Texas. If filed in the county where doing business, provide a copy of the legal documents showing the legal name.

**c) Person Signing Application**
Provide information about person signing section 5) Certification.

**d) Operator Contact's (Responsible Authority) Contact Information and Mailing Address**
Provide a complete mailing address for receiving mail from the TCEQ. The address must be verifiable with the US Postal Service at http://www.usps.com for regular mail delivery (not overnight express mail). If you find that the address is not verifiable using the USPS web search, please indicate the address is used by the USPS for regular mail delivery.

The area code and phone number should provide contact to the operator. Leave Extension blank if not applicable.

The fax number and e-mail address are optional and should correspond to the operator.

**e) Type of Customer (Entity Type)**
Check only one box that identifies the type of entity. Use the descriptions below to identify the appropriate entity type. Note that the selected entity type also indicates the name that must be provided as an applicant for a permit, registration or authorization.

**Sole Proprietorship – DBA**

A sole proprietorship is a customer that is owned by only one person and has not been incorporated. This business may:

- be under the person's name
- have its own name (doing business as or d.b.a.)
- have any number of employees

If the customer is a Sole Proprietorship or DBA, the 'legal name' of the individual business 'owner' must be provided. The DBA name is not recognized as the 'legal name' of the entity. The DBA name may be used for the site name (regulated entity).

**Individual**

An individual is a customer who has not established a business, but conducts an activity that needs to be regulated by the TCEQ.

**Partnership**

- A customer that is established as a partnership as defined by the Texas Secretary of State Office (TX SOS). A Limited Partnership or Limited Liability Partnership (Partnership) is required to file with the Texas Secretary of State. A General Partnership or Joint Venture is not required to register with the state.
- **Partnership (Limited Partnership or Limited Liability Partnership):** A limited partnership is defined in the Act as a partnership formed by two or more persons under the provisions of Section 3 of the Uniform Limited Partnership Act (Art. 6132a, Revised Civil Statutes of Texas) and having as members one or more general partners and one or more limited partners. The limited partners as such are not bound by the obligations of the partnership. Limited partners may not take part in the day-to-day operations of the business. A Limited Partnership must file with the Texas Secretary of State. A registered limited liability partnership is a general or limited partnership that is registered with the Texas Secretary of State. The partnership's name must contain the words "Registered Limited Liability Partnership" or the abbreviation "L.L.P." as the last words or letters of its name.
- **General Partnership:** A general partner may or may not invest, participates in running the partnership and is liable for all acts and debts of the partnership and any member of it. A General Partnership does not have limited partners. For a General Partnership, there is no registration with the state or even written agreement necessary for a general partnership to be formed. The legal definition of a partnership is generally stated as "an association of two or more persons to carry on as co-owners a business for profit" (Revised Uniform Partnership Act § 101 [1994]).
- **Joint Venture:** A joint venture is but another name for a special partnership. It might be distinguished from a general partnership in that the latter is formed for the transaction of a general business, while a joint venture is usually limited to a single transaction. That is, a joint venture is a special combination of persons in the nature of a partnership engaged in the joint prosecution of a particular transaction for mutual benefit or profit.

**Corporation**

A customer meets all of these conditions:

- is a legally incorporated entity under the laws of any state or country
- is recognized as a corporation by the Texas Secretary of State

- has proper operating authority to operate in Texas.
- The corporation's 'legal name' as filed with the Texas Secretary of State must be provided as applicant. An 'assumed' name of a corporation is not recognized as the 'legal name' of the entity.

**Government**

Federal, state, county, or city government (as appropriate)
The customer is either an agency of one of these levels of government or the governmental body itself. The government agency's 'legal name' must be provided as the applicant. A department name or other description of the organization should not be included as a part of the 'legal name' as applicant.

**Trust or Estate**

A trust and an estate are fiduciary relationships governing the trustee/executor with respect to the trust/estate property.

**Other Government**

A utility district, water district, tribal government, college district, council of governments, or river authority. Write in the specific type of government.

**f) Independent Entity**

Check No if this customer is a subsidiary, part of a larger company, or is a governmental entity. Otherwise, check Yes.

**g) Number of Employees**

Check one box to show the number of employees for this customer's entire company, at all locations. This is not necessarily the number of employees at the site named in the application.

**h) Customer Business Tax and Filing Numbers**

These are required for Corporations and Limited Partnerships. These are not required for Individuals, Government, and Sole Proprietors.

**State Franchise Tax ID Number**

Corporations and limited liability companies that operate in Texas are issued a franchise tax identification number. If this customer is a corporation or limited liability company, enter this number here.

**Federal Tax ID**

All businesses, except for some small sole proprietors, individuals, or general partnerships should have a federal taxpayer identification number (TIN). Enter this number here. Use no prefixes, dashes, or hyphens. Sole proprietors, individuals, or general partnerships do not need to provide a federal tax ID.

**TX SOS Charter (filing) Number**

Corporations and Limited Partnerships required to register with the Texas Secretary of State are issued a charter or filing number. You may obtain further information by calling SOS at 512/463-5555.

**DUNS Number**

Most businesses have a DUNS (Data Universal Numbering System) number issued by Dun and Bradstreet Corp. If this customer has one, enter it here.

## 2. APPLICATION CONTACT

Provide the name, title and communication information of the person that TCEQ can contact for additional information regarding this application.

## 3. REGULATED ENTITY (RE) INFORMATION ON PROJECT OR SITE

### a) Regulated Entity Reference Number (RN)

A number issued by TCEQ's Central Registry to sites (a location where a regulated activity occurs) regulated by TCEQ. This is not a permit number, registration number, or license number. If this regulated entity has not been assigned an RN, leave this space blank.

If the site of your business is part of a larger business site, a Regulated Entity Number (RN) may already be assigned for the larger site. Use the RN assigned for the larger site. Search TCEQ's Central Registry to see if the larger site may already be registered as a regulated site at: http://www12.tceq.texas.gov/crpub/index.cfm?fuseaction=regent.RNSearch

If the site is found, provide the assigned Regulated Entity Reference Number (RN) and provide the information for the site to be authorized through this application. The site information for this authorization may vary from the larger site information.

An example is a chemical plant where a unit is owned or operated by a separate corporation that is accessible by the same physical address of your unit or facility. Other examples include industrial parks identified by one common address but different corporations have control of defined areas within the site. In both cases, an RN would be assigned for the physical address location and the permitted sites would be identified separately under the same RN.

### b) Site/Project Name/Regulated Entity

Provide the name of the site as known by the public in the area where the site is located. The name you provide on this application will be used in the TCEQ Central Registry as the Regulated Entity name.

### c) Description of Activity Regulated

In your own words, briefly describe the primary business that you are doing that requires this authorization. Do not repeat the SIC Code description.

### d) County

Identify the county or counties in which the regulated entity is located.

### e) Latitude and Longitude

Enter the latitude and longitude of the site in degrees, minutes, and seconds or decimal form. For help obtaining the latitude and longitude, go to:
http://www.tceq.texas.gov/gis/sqmaview.html or http://nationalmap.gov/ustopo

### f) Site/Project (RE) Physical Address/Location Information

Enter the complete address for the site in Section A if the address can be validated through the US Postal Service. If the physical address is not recognized as a USPS delivery address, you may need to validate the address with your local police (911 service) or through an online map site used to locate a site. Please confirm this to be a complete and valid address. Do not use a rural route or post office box for a site location.

If a site does not have an address that includes a street (or house) number and street name, enter NO ADDRESS for the street name in Section A. In Section B provide a complete written location description. For example: "The site is located 2 miles west from intersection of Hwy 290 & IH35, located on the southwest corner of the Hwy 290 South bound lane."
Provide the city (or nearest city) and zip code of the facility location.

## 4. GENERAL CHARACTERISTICS

### a) Indian Country Lands

If your site is located on Indian Country Lands, the TCEQ does not have authority to process your application. You must obtain authorization through EPA, Region 6, Dallas. Do not submit this form to TCEQ.

### b) Construction activity associated with facility associated with exploration, development, or production of oil, gas, or geothermal resources

If your activity is associated with oil and gas exploration, development, or production, you may be under jurisdiction of the Railroad Commission of Texas and may need to obtain authorization from EPA Region 6. For more information, see:
http://info.sos.state.tx.us/pls/pub/readtac$ext.TacPage?sl=R&app=9&p_dir=&p_rloc=&p_tloc=&p_ploc=&pg=1&p_tac=&ti=16&pt=1&ch=3&rl=30

Construction activities associated with a facility related to oil, gas or geothermal resources may include the construction of a well site; treatment or storage facility; underground hydrocarbon or natural gas storage facility; reclamation plant; gas processing facility; compressor station; terminal facility where crude oil is stored prior to refining and at which refined products are stored solely for use at the facility; a carbon dioxide geologic storage facility; and a gathering, transmission, or distribution pipeline that will transport crude oil or natural gas, including natural gas liquids, prior to refining of such oil or the use of the natural gas in any manufacturing process or as a residential or industrial fuel.

Where required by federal law, discharges of stormwater associated with construction activities under the Railroad Commission's jurisdiction must be authorized by the EPA and the Railroad Commission of Texas, as applicable. Activities under Railroad Commission of Texas jurisdiction include construction of a facility that, when completed, would be associated with the exploration, development, or production of oil or gas or geothermal resources, such as a well site; treatment or storage facility; underground hydrocarbon or natural gas storage facility; reclamation plant; gas processing facility; compressor station; terminal facility where crude oil is stored prior to refining and at which refined products are stored solely for use at the facility; a carbon dioxide geologic storage facility under the jurisdiction of the Railroad Commission of Texas; and a gathering, transmission, or distribution pipeline that will transport crude oil or natural gas, including natural gas liquids, prior to refining of such oil or the use of the natural gas in any manufacturing process or as a residential or industrial fuel. The Railroad Commission of Texas also has jurisdiction over stormwater from land disturbance associated with a site survey that is conducted prior to construction of a facility that would be regulated by the Railroad Commission of Texas. Under 33 U.S.C. §1342(l)(2) and §1362(24), EPA cannot require a permit for discharges of stormwater from "field activities or operations associated with {oil and gas} exploration, production, processing, or treatment operations, or transmission facilities, including activities necessary to prepare a site for drilling and for the movement and placement of drilling equipment, whether or not such field activities or operations may be considered to be construction activities" unless the discharge is contaminated by contact with any overburden, raw material, intermediate product, finished product, byproduct, or waste product located on the site of the facility. Under §3.8 of this title (relating to Water Protection), the Railroad

Commission of Texas prohibits operators from causing or allowing pollution of surface or subsurface water. Operators are encouraged to implement and maintain best management practices (BMPs) to minimize discharges of pollutants, including sediment, in stormwater during construction activities to help ensure protection of surface water quality during storm events.

### c) Primary Standard Industrial Classification (SIC) Code

Provide the SIC Code that best describes the construction activity being conducted at this site.

Common SIC Codes related to construction activities include:

- 1521 - Construction of Single Family Homes
- 1522 - Construction of Residential Bldgs. Other than Single Family Homes
- 1541 - Construction of Industrial Bldgs. and Warehouses
- 1542 - Construction of Non-residential Bldgs, other than Industrial Bldgs. and Warehouses
- 1611 - Highway and Street Construction, except Highway Construction
- 1622 - Bridge, Tunnel, and Elevated Highway Construction
- 1623 - Water, Sewer, Pipeline and Communications, and Power Line Construction

For help with SIC Codes, go to:
http://www.osha.gov/pls/imis/sicsearch.html

### d) Secondary SIC Code

Secondary SIC Code(s) may be provided. Leave blank if not applicable. For help with SIC Codes, go to:
http://www.osha.gov/pls/imis/sicsearch.html

### e) Total Number of Acres Disturbed

Provide the approximate number of acres that the construction site will disturb. Construction activities that disturb less than one acre, unless they are part of a larger common plan that disturbs more than one acre, do not require permit coverage. Construction activities that disturb between one and five acres, unless they are part of a common plan that disturbs more than five acres, do not require submission of an NOI. Therefore, the estimated area of land disturbed should not be less than five, unless the project is part of a larger common plan that disturbs five or more acres. Disturbed means any clearing, grading, excavating, or other similar activities.

If you have any questions about this item, please contact the stormwater technical staff by phone at (512)239-4671 or by email at swgp@tceq.texas.gov.

### f) Common Plan of Development

Construction activities that disturb less than five acres do not require submission of an NOI unless they are part of a common plan of development or for sale where the area disturbed is five or more acres. Therefore, the estimated area of land disturbed should not be less than five, unless the project is part of a larger common plan that disturbs five or more acres. Disturbed means any clearing, grading, excavating, or other similar activities.

For more information on "What is a common plan of development?" go to:
www.tceq.texas.gov/permitting/stormwater/common_plan_of_development_steps.html

For further information, go to the TCEQ stormwater construction webpage at:
www.tceq.texas.gov/goto/construction and search for "Additional Guidance and Quick Links". If

you have any further questions about this item, please call the stormwater technical staff at (512)239-4671.

**g) Identify the water body(s) receiving stormwater runoff**
The stormwater may be discharged directly to a receiving stream or through a MS4 from your site. It eventually reaches a receiving water body such as a local stream or lake, possibly via a drainage ditch. You must provide the name of the water body that receives the discharge from the site (a local stream or lake).

If your site has more than one outfall you need to include the name of the first water body for each outfall, if they are different.

**h) Identify the segment number(s) of the classified water body(s)**
Identify the classified segment number(s) receiving a discharge directly or indirectly. Go to the following link to find the segment number of the classified water body where stormwater will flow from the site: www.tceq.texas.gov/waterquality/monitoring/viewer.html

You may also find the segment number in TCEQ publication GI-316:
www.tceq.texas.gov/publications/gi/gi-316

If the discharge is into an unclassified receiving water and then crosses state lines prior to entering a classified segment, select the appropriate watershed:

- 0100 (Canadian River Basin)
- 0200 (Red River Basin)
- 0300 (Sulfur River Basin)
- 0400 (Cypress Creek Basin)
- 0500 (Sabine River Basin)

Call the Water Quality Assessments section at (512)239-4671 for further assistance.

**i) Discharge into MS4 – Identify the MS4 Operator**
The discharge may initially be into a municipal separate storm sewer system (MS4). If the stormwater discharge is into an MS4, provide the name of the entity that operates the MS4 where the stormwater discharges. An MS4 operator is often a city, town, county, or utility district, but possibly can be another form of government. Please note that the Construction General Permit requires the Operator to supply the MS4 with a copy of the NOI submitted to TCEQ. For assistance, you may call the technical staff at (512)239-4671.

**j) Surface Water bodies on list of impaired waters – Identify the impaired water body(s)**
Indicate Yes or No if any surface water bodies receiving discharges from the construction site are on the latest EPA-approved CWA 303(d) List of impaired waters. Provide the name(s) of surface water bodies receiving discharges or potential discharges from the construction site that are on the latest EPA-approved CWA 303(d) List of impaired waters. The EPA-approved CWA 303(d) List of impaired waters in Texas can be found at:
www.tceq.texas.gov/waterquality/assessment/305_303.html

NOTE: Do not use any "draft" documents.

### k) Discharges to the Edwards Aquifer Recharge Zone and Certification

See maps on the TCEQ website to determine if the site is located within the Recharge Zone, Contributing Zone, or Contributing Zone within the Transition Zone of the Edwards Aquifer at: www.tceq.texas.gov/field/eapp/viewer.html

If the discharge or potential discharge is within the Recharge Zone, Contributing Zone, or Contributing Zone within the Transition Zone of the Edwards Aquifer, a site specific authorization approved by the Executive Director under the Edwards Aquifer Protection Program (30 TAC Chapter 213) is required before construction can begin. The certification must be answered "Yes" for coverage under the Construction General Permit. The TCEQ approved plan must be readily available for TCEQ staff to review at the time that the NOI is submitted.

The general permit requires the approved Contributing Zone Plan or Water Pollution Abatement Plan to be included or referenced as a part of the Stormwater Pollution Prevention Plan.

For questions regarding the Edwards Aquifer Protection Program, contact the appropriate TCEQ Regional Office. For projects in Hays, Travis and Williamson Counties: Austin Regional Office, 12100 Park 35 Circle, Austin, TX 78753, 512-339-2929. For Projects in Bexar, Comal, Kinney, Medina and Uvalde Counties: TCEQ San Antonio Regional Office, 14250 Judson Rd., San Antonio, TX 78233-4480, 210-490-3096.

## 5. CERTIFICATIONS

Failure to indicate **Yes** to ALL of the certification items may result in denial of coverage under the general permit.

### a) Certification of Understanding the Terms and Conditions of Construction General Permit (TXR150000)

Provisional coverage under the Construction General Permit (TXR150000) begins 7 days after the completed paper NOI is postmarked for delivery to the TCEQ. (Electronic applications submitted through ePermits have immediate provisional coverage). You must obtain a copy and read the Construction General Permit before submitting your application. You may view and print the Construction General Permit for which you are seeking coverage at the TCEQ web site: www.tceq.texas.gov/goto/construction

### b) Certification of Legal Name

The full legal name of the applicant as authorized to do business in Texas is required. The name must be provided exactly as filed with the Texas Secretary of State (SOS), or on other legal documents forming the entity, that is filed in the county where doing business. You may contact the SOS at (512)463 5555, for more information related to filing in Texas.

### c) Understanding of Notice of Termination

A permittee shall terminate coverage under this Construction General Permit through the submittal of a NOT when the operator of the facility changes, final stabilization has been reached, the discharge becomes authorized under an individual permit, or the construction activity never began at this site.

### d) Certification of Stormwater Pollution Prevention Plan

The SWP3 identifies the areas and activities that could produce contaminated runoff at your site and then tells how you will ensure that this contamination is mitigated. For example, in describing your mitigation measures, your site's plan might identify the devices that collect and

filter stormwater, tell how those devices are to be maintained, and tell how frequently that maintenance is to be carried out. You must develop this plan in accordance with the TCEQ general permit requirements. This plan must be developed and implemented before you complete this NOI. The SWP3 must be available for a TCEQ investigator to review on request.

**Operator Certification:**
The certification must bear an original signature of a person meeting the signatory requirements specified under 30 Texas Administrative Code (TAC) §305.44.

## IF YOU ARE A CORPORATION:
The regulation that controls who may sign an NOI or similar form is 30 Texas Administrative Code §305.44(a)(1) (see below). According to this code provision, any corporate representative may sign an NOI or similar form so long as the authority to sign such a document has been delegated to that person in accordance with corporate procedures. By signing the NOI or similar form, you are certifying that such authority has been delegated to you. The TCEQ may request documentation evidencing such authority.

## IF YOU ARE A MUNICIPALITY OR OTHER GOVERNMENT ENTITY:
The regulation that controls who may sign an NOI or similar form is 30 Texas Administrative Code §305.44(a)(3) (see below). According to this code provision, only a ranking elected official or principal executive officer may sign an NOI or similar form. Persons such as the City Mayor or County Commissioner will be considered ranking elected officials. In order to identify the principal executive officer of your government entity, it may be beneficial to consult your city charter, county or city ordinances, or the Texas statute(s) under which your government entity was formed. An NOI or similar document that is signed by a government official who is not a ranking elected official or principal executive officer does not conform to §305.44(a)(3). The signatory requirement may not be delegated to a government representative other than those identified in the regulation. By signing the NOI or similar form, you are certifying that you are either a ranking elected official or principal executive officer as required by the administrative code. Documentation demonstrating your position as a ranking elected official or principal executive officer may be requested by the TCEQ.

If you have any questions or need additional information concerning the signatory requirements discussed above, please contact the Texas Commission on Environmental Quality's Environmental Law Division at (512)239-0600.

**30 Texas Administrative Code**
**§305.44. Signatories to Applications**

(a) All applications shall be signed as follows.

(1) For a corporation, the application shall be signed by a responsible corporate officer. For purposes of this paragraph, a responsible corporate officer means a president, secretary, treasurer, or vice-president of the corporation in charge of a principal business function, or any other person who performs similar policy or decision-making functions for the corporation; or the manager of one or more manufacturing, production, or operating facilities employing more than 250 persons or having gross annual sales or expenditures exceeding $25 million (in second-quarter 1980 dollars), if authority to sign documents has been assigned or delegated to the manager in accordance with corporate procedures. Corporate procedures governing authority to sign permit or post-closure order applications may provide for assignment or delegation to applicable corporate positions rather than to specific individuals.

(2) For a partnership or sole proprietorship, the application shall be signed by a general partner or the proprietor, respectively.

(3) For a municipality, state, federal, or other public agency, the application shall be signed by either a principal executive officer or a ranking elected official. For purposes of this paragraph, a principal executive officer of a federal agency includes the chief executive officer of the agency, or a senior executive officer having responsibility for the overall operations of a principal geographic unit of the agency (e.g., regional administrator of the EPA).

# Texas Commission on Environmental Quality
# General Permit Payment Submittal Form

**Use this form to submit your Application Fee only if you are mailing your payment.**

- Complete items 1 through 5 below:
- Staple your check in the space provided at the bottom of this document.
- Do not mail this form with your NOI form.
- Do not mail this form to the same address as your NOI.

**Mail this form and your check to:**

*BY REGULAR U.S. MAIL*

Texas Commission on Environmental Quality
Financial Administration Division
Cashier's Office, MC-214
P.O. Box 13088
Austin, TX 78711-3088

*BY OVERNIGHT/EXPRESS MAIL*

Texas Commission on Environmental Quality
Financial Administration Division
Cashier's Office, MC-214
12100 Park 35 Circle
Austin, TX 78753

| Fee Code: GPA | General Permit: TXR150000 |
|---|---|

1. Check / Money Order No: _____
2. Amount of Check/Money Order: _____
3. Date of Check or Money Order: _____
4. Name on Check or Money Order: _____
5. NOI INFORMATION

   If the check is for more than one NOI, list each Project/Site (RE) Name and Physical Address exactly as provided on the NOI. DO NOT SUBMIT A COPY OF THE NOI WITH THIS FORM AS IT COULD CAUSE DUPLICATE PERMIT ENTRIES.

   See Attached List of Sites (If more space is needed, you may attach a list.)

   Project/Site (RE) Name: _____

   Project/Site (RE) Physical Address:

   _____

Staple Check in This Space

# Notice of Termination (NOT) for Authorizations under TPDES General Permit TXR150000

**TCEQ Office Use Only**
Permit No.:
RN:
CN:

**Sign up now for on line NOT at https://www6.tceq.texas.gov/steers/**
**Get your NOT Confirmation letter immediately after submitting the on line NOT form.**

**What is the permit number to be terminated?**
**Processing will be delayed without the permit number. TXR15_____**

**A. OPERATOR (applicant)**

1. What is the Customer Number (CN) issued to this entity? **CN** 600128995
2. What is the full Legal Name of the current permittee?
   City of Houston Department of Public Works and Engineering
   *This must be the current permittee of the permit to be terminated.*
3. What is the applicant's mailing address as recognized by the **US Postal Service**?

| | | |
|---|---|---|
| Address: 1002 Washington Ave | Suite No./Bldg. No./Mail Code: | |
| City: Houston | State: Texas | ZIP Code: 77002 |
| Country Mailing Information (if outside USA). | Country Code: | Postal Code: |

| | |
|---|---|
| 4. Phone No.: ( ) | Extension: |
| 5. Fax No.: ( ) | E-mail Address: tim.lincoln@houstontx.gov |

**B. REGULATED ENTITY** (RE) INFORMATION ON PROJECT OR SITE

1. What is the TCEQ Issued RE Reference Number (RN)? **RN**
2. Name of Project or Site as currently permitted):
   Buffalo Speedway Paving and Drainage from West Airport Boulevard to Holmes Road
   (example: phase and name of subdivision or name of project that's unique to the site)
3. Physical Address of Project or Site as currently permitted: (enter in spaces below)

| | | |
|---|---|---|
| Street Number: | Street Name: Buffalo Speedway | |
| City: Houston | ZIP Code: 77045 | County (Counties if >1): |

4. If no physical address (Street Number & Street Name), provide the written location access description to the site:
   Located in between Holmes Road and West Airport Boulevard 2 miles east of Holmes Road and Hwy 90 Alt

**C. REASON FOR TERMINATION**

Check the reason for termination:

- ☐ Final stabilization has been achieved on all portions of the site that are the responsibility of the Operator and all silt fences and other temporary erosion controls have either been removed, or scheduled for removal as defined in the SWP3.
- ☐ Another permitted Operator has assumed control over all areas of the site that have not been finally stabilized, and temporary erosion controls that have been defined in the SWP3 have been transferred to the new Operator.
- ☐ The activity is now authorized under an alternate TPDES permit.
- ☐ The activity never began at this site that is regulated under the general permit.

**D. CERTIFIC ATION**

I, _____ _____
Typed or printed name Title

certify under penalty of law that this document and all attachments were prepared under my direction or supervision in accordance with a system designed to assure that qualified personnel properly gather and evaluate the information submitted. Based on my inquiry of the person or persons who manage the system, or those persons directly responsible for gathering the information, the information submitted is, to the best of my knowledge and belief, true, accurate, and complete. I am aware there are significant penalties for submitting false information, including the possibility of fine and imprisonment for knowing violations.

I further certify that I am authorized under **30 Texas Administrative Code §305.44** to sign and submit this document, and can provide documentation in proof of such authorization upon request.

Signature:_____ Date:_____
(Use blue ink)

# Notice of Termination (NOT) for Authorizations under TPDES General Permit TXR150000 General Information and Instructions

## GENERAL INFORMATION

Where to Send the Notice of Intent (NOI):

BY REGULAR U.S. MAIL
Texas Commission on Environmental Quality
Stormwater Processing Center (MC228)
P.O. Box 13087
Austin, TX 78711-3087

BY OVERNIGHT/EXPRESS MAIL
Texas Commission on Environmental Quality
Stormwater Processing Center (MC228)
12100 Park 35 Circle
Austin, TX 78753

TCEQ Contact list:

| | |
|---|---|
| Application Processing Questions relating to the status and form requirements: | 512/239-3700 or swpermit@tceq.texas.gov |
| Technical Questions relating to the general permit: | 512/239-4671 |
| Environmental Law Division: | 512/239-0600 |
| Records Management for obtaining copies of forms submitted to TCEQ: | 512/239-0900 |
| Information Services for obtaining reports from program data bases (as available): | 512/239-DATA (3282) |
| Financial Administration's Cashier's office: | 512/239-0357 or 512/239-0187 |

**Notice of Termination Process:**

A Notice of Termination is **effective on the date postmarked for delivery to TCEQ**.
When your NOT is received by the program, the form will be processed as follows:

1. **Administrative Review:** The form will be reviewed to confirm the following:
   - the permit number is provided
   - the permit is active and has been approved
   - the entity terminating the permit is the current permittee
   - the site information matches the original permit record
   - the form has the required original signature with title and date

2. **Notice of Deficiency:** If an item is incomplete or not verifiable as indicated above, a phone call will be made to the applicant to clear the deficiency. A letter will not be sent to the permittee if unable to process the form.

3. **Confirmation of Termination:** A Notice of Termination Confirmation letter will be mailed to the operator.

**General Permit (Your Permit)**
Coverage under the general permit begins **48 hours after a completed NOI is postmarked for delivery to** the TCEQ. You should have a copy of your general permit when submitting your application. You may view and print your permit for which you are seeking coverage, on the TCEQ web site www.tceq.texas.gov

**General Permit Forms**
The Notice of Intent (NOI), Notice of Termination (NOT), and Notice of Change (NOC) with instructions are available in Adobe Acrobat PDF format on the TCEQ web site www.tceq.texas.gov.

**Change in Operator**
An authorization under the general permit is not transferable. If the operator or owner of the regulated entity changes, the present permittee must submit a Notice of Termination and the new operator must submit a Notice of Intent. The NOT and NOI must be submitted not later than 10 days prior to the change in Operator status.

**TCEQ Central Registry Core Data Form**
The Core Data Form has been incorporated into this form. **Do not send a core data form to TCEQ.**

After final acknowledgment of coverage under the general permit, the program will assign a Customer Number (CN) and Regulated Entity Number (RN). For Construction Permits, a new RN will be assigned for each Notice of Intent filed with TCEQ, since construction project sites can overlap with other Customers. The RN assigned to your construction project will not be assigned to any other TCEQ authorization.

You can find the information on the Central Registry web site at www12.tceq.texas.gov/crpub/. You can search by the Regulated Entity (RN), Customer Number (CN) or Name (Permittee), or by your permit number under the search field labeled "Additional ID". Capitalize all letters in the permit number.

The Customer (Permittee) is responsible for providing consistent information to the TCEQ, and for updating all CN and RN data for all authorzations as changes occur. For General Permits, a Notice of Change form must be submitted to the program area.

**Annual Water Quality Fee:** This fee is assessed to operators with an active authorization under the general permit on September 1 of each year. The operator will receive an invoice for payment of the annual fee in November of each year. The payment will be due 30 days from the invoice date. A 5% penalty will be assessed if the payment is received by TCEQ after the due date. Annual fee assessments cannot be waived as long as the authorization under the general permit is active on September 1.

It's important for the operator to submit a **Notice of Termination** (NOT) when coverage under the general permit is no longer required. A NOT is effective on the postmarked date of mailing the form to TCEQ. It is recommended that the NOT be mailed using a method that documents the date mailed and received by TCEQ.

- Mailed Payments:

You must return your payment with the billing coupon provided with the billing statement.

- ePAY Electronic Payment:

Go to www6.tceq.texas.gov/epay/
You must enter your account number provided at the top portion of your billing statement. Payment methods include Mastercard, Visa, and electronic check payment (ACH). A transaction over $500 can only be made by ACH.

# INSTRUCTIONS FOR FILLING OUT THE NOT FORM

**A. OPERATOR** (current permittee.)

1. TCEQ Issued Customer Number (CN)

2. Legal Name of Operator
The operator must be the same entity as previously submitted on the original Notice of Intent for the permit number provided.

3. Operator Mailing Address
Provide a complete mailing address for receiving mail from the TCEQ. Update the address if different than previously submitted in the Notice of Intent or Notice of Change.

4. Phone Number, Fax Number, and E-mail Address
Provide updated contact information.

**B. REGULATED ENTITY** (RE) INFORMATION ON PROJECT OR SITE

1. Regulated Entity Reference Number (RN)

2. Site/Project Name/Regulated Entity
Provide the name of the site as previously submitted in the Notice of Intent for the permit number provided.

3. Site/Project (RE) Physical Address
Provide the physical address or location access description as previously submitted for the permit number provided.

**C. REASON FOR TERMINATION**

Indicate the reason for terminating the permit by checking one of the options. If the reason is not listed then provide an attachment that explains the reason for termination.

Please read your general permit carefully to determine when to terminate your permit. Permits will not be reactivated after submitting a termination form. The termination is effective on the date postmarked for delivery to TCEQ.

**D. CERTIFICATIONS**

The certification must bear an original signature of a person meeting the signatory requirements specified under 30 Texas Administrative Code (TAC) §305.44.

**IF YOU ARE A CORPORATION:**

The regulation that controls who may sign an NOI or similar form is 30 Texas Administrative Code §305.44(a)(1) (see below). According to this code provision, any corporate representative may sign an NOI or similar form so long as the authority to sign such a document has been delegated to that person in accordance with corporate procedures. By signing the NOI or similar form, you are certifying that such authority has been delegated to you. The TCEQ may request documentation evidencing such authority.

**IF YOU ARE A MUNICIPALITY OR OTHER GOVERNMENT ENTITY:**

The regulation that controls who may sign an NOI or similar form is 30 Texas Administrative Code §305.44(a)(3) (see below). According to this code provision, only a ranking elected official or principal executive officer may sign an NOI or similar form. Persons such as the City Mayor or County Commissioner will be considered ranking elected officials. In order to identify the principal executive officer of your government entity, it may be beneficial to consult your city charter, county or city ordinances, or the Texas statute(s) under which your government entity was formed. An NOI or similar document that is signed by a government official who is not a ranking elected official or principal executive officer does not conform to

§305.44(a)(3). The signatory requirement may not be delegated to a government representative other than those identified in the regulation. By signing the NOI or similar form, you are certifying that you are either a ranking elected official or principal executive officer as required by the administrative code. Documentation demonstrating your position as a ranking elected official or principal executive officer may be requested by the TCEQ.

If you have any questions or need additional information concerning the signatory requirements discussed above, please contact the Texas Commission on Environmental Quality's Environmental Law Division at 512/239-0600.

**30 Texas Administrative Code**
**§305.44. Signatories to Applications.**

(a) All applications shall be signed as follows.

(1) For a corporation, the application shall be signed by a responsible corporate officer. For purposes of this paragraph, a responsible corporate officer means a president, secretary, treasurer, or vice-president of the corporation in charge of a principal business function, or any other person who performs similar policy or decision-making functions for the corporation; or the manager of one or more manufacturing, production, or operating facilities employing more than 250 persons or having gross annual sales or expenditures exceeding $25 million (in second-quarter 1980 dollars), if authority to sign documents has been assigned or delegated to the manager in accordance with corporate procedures. Corporate procedures governing authority to sign permit or post-closure order applications may provide for assignment or delegation to applicable corporate positions rather than to specific individuals.

(2) For a partnership or sole proprietorship, the application shall be signed by a general partner or the proprietor, respectively.

(3) For a municipality, state, federal, or other public agency, the application shall be signed by either a principal executive officer or a ranking elected official. For purposes of this paragraph, a principal executive officer of a federal agency includes the chief executive officer of the agency, or a senior executive officer having responsibility for the overall operations of a principal geographic unit of the agency (e.g., regional administrator of the EPA).