CITY OF HOUSTON
DEPARTMENT OF PUBLIC WORKS AND ENGINEERING
ENGINEERING AND CONSTRUCTION DIVISION

PROJECT MANUAL
MISSOURI KANSAS TEXAS TRAIL SPUR CONNECTOR
WBS No. N-320420-030A-4, TXDOT CSJ No. 0912-72-299

VOLUME 1 of 1

Divisions 00 through 16

November 2015

klotz associates

1160 Dairy Ashford, Suite 500
Houston, Texas 77079

Texas PE Firm Registration No. F-929

STATE OF TEXAS
BRADLEY R. BROWN
58842
REGISTERED
PROFESSIONAL ENGINEER

11/23/2015

Doc. No.	Document Title	Doc. Date

Document 00010-T

TABLE OF CONTENTS

NOTE: Bold capitalized Specification Sections are included in the City of Houston Department of Public Works and Engineering Standard Construction Specifications for Wastewater Collection Systems, Water Lines, Storm Drainage, Street Paving, and Traffic located here: **http://documents.publicworks.houstontx.gov/document-center/cat_view/88-engineering-and-construction/92-specifications/208-division-02-16-standard-specifications.html**; and are incorporated in Project Manuals by reference as if copied verbatim. Documents listed "for filing" are to be provided by Bidder and are not included in this Project Manual unless indicated for example only. The Document numbers and titles hold places for actual documents to be submitted by Contractor during Bid, post-bid, or construction phase of the Project. Specification Sections marked with an asterisk (*) are amended by a supplemental specification, printed on blue paper and placed in front of the Specification it amends. Documents in the 200, 300 and 400 series of Division 00, except for Document 00410B – Bid Form, Part B, are not part of the Contract.

Doc. No.	Document Title	Doc. Date

INTRODUCTORY INFORMATION

00010-T	TxDOT Table of Contents	08-01-2015
00015	List of Drawings	02-01-2004
00041	List of Pre-qualified Asbestos & Lead Abatement Contractors..	03-21-2012
00042	List of Designated Subcontractors and Suppliers	02-01-2004

BIDDING REQUIREMENTS

INSTRUCTIONS TO BIDDERS

00200	Instructions to Bidders	.08-01-2015
00210-T	TxDOT Supplementary Instructions to Bidders	.08-01-2015
00220	Request for Bid Information.....	02-08-2011

INFORMATION AVAILABLE TO BIDDERS

00320	Geotechnical Information	09-02-2005

BID FORMS AND SUPPLEMENTS

00410	Bid Form, Parts A & B	.08-01-2015
00430	Bidder's Bond (For filing; Example Form).....	02-01-2004
00452	Contractor Submission List - Fair Campaign Ordinance	04-30-2004
00453	Bidders Statement of Residency.....	.02-01-2004
00454	Affidavit of Non-interest.....	02-01-2004
00455	Affidavit of Ownership or Control.....	09-04-2007

Doc. No.	Document Title	Doc. Date
00456	Bidder's Certificate of Compliance with Buy American Program	02-01-2004
00457	Conflict of Interest Questionnaire	02-28-2006
00458	Bidder's Certificate Regarding Foreign Trade Restriction	02-01-2004
00459	Contractor's Statement Regarding Previous Contracts Subject to EEO	02-01-2004

POST-BID PROCEDURES

00495-T	Post-bid Procedures for TxDOT Funded Projects	08-01-2013

CONTRACTING REQUIREMENTS

AGREEMENT

00501	Resolution of Contractor	02-01-2010
00520-T	Agreement	07-01-2013

BONDS AND CERTIFICATES

00600-T	List of Proposed Subcontractors and Suppliers, Parts A & B	03-25-2013
00601	Drug Policy Compliance Agreement	02-01-2004
00602	Contractor's Drug Free Workplace Policy (For filing)	
00603	Checklist for Drug Policy Submittal	02-09-2012
00604	History of OSHA Actions and List of On-the-job Injuries	02-01-2004
00605	List of Safety Impact Positions	02-01-2004
00606	Contractor's Certification of No Safety Impact Positions	02-01-2004
00607	Certification Regarding Debarment, Suspension, and Other Responsibility Matters	02-01-2004
00610	Performance Bond	05-17-2005
00611	Statutory Payment Bond	05-17-2005
00612T	One Year Warranty of Work Bond	04-10-2013
00620	Affidavit of Insurance (with attached Certificates of Insurance)	02-01-2004
00622	Name and Qualifications of Proposed Superintendent (For filing)	
00624	Affidavit of Compliance with Affirmative Action Program	02-01-2004
00633	Equal Employment Opportunity - Certification By Material Suppliers	02-01-2010
00642	Monthly Subcontractor Payment Reporting Form	02-01-2010
00646	Payment Notification Explanation of Withholding	02-01-2010

GENERAL CONDITIONS

00700	General Conditions	08-01-2015

SUPPLEMENTARY CONDITIONS

00800-T	TxDOT Supplementary Conditions	08-15-2015
00806-T	Disadvantaged Business Enterprise Program Requirements	03-31-2012
00812	Federal Wage Rate - Heavy	05-01-2012
00851	Buy America Requirements	05-21-2012
00852	Changed Conditions	08-01-2011

Doc. No.	Document Title	Doc. Date
ADDENDA AND MODIFICATIONS		
00910	Addendum.....	02-01-2004
00911	Notice of Addendum.....	02-01-2004
00912	Rider.....	05-15-2009
00931	Request for Information (Example only)	02-01-2004

TxDOT SPECIAL PROVISIONS

SPE 000---003	Notice to All Bidders
SPE 000---004	Notice of Requirement for Affirmative Action to Ensure Equal Employment Opportunity
SPE 000---006	Standard Federal EEO Construction Contract Specifications
SPE 000---009	Certificate of Non-Discrimination
SPE 000---011	Department Division Mailing and Physical Addresses
SPE 000---1483	Changes to Payroll Information
SPE 000---2638	On the Job Training Program
SPE 000---2329	Partnering
SPE 000---2607	Nondiscrimination
SPE 000---1966	Disadvantaged Business Enterprise in Federal Aid Contracts
SPE 440---006	Reinforcing Steel

ADDITIONAL STATE OR FEDERAL REQUIREMENTS
Certificate of Lobbying Activities
Child Support Certificate (Language in the 00410B)
FHWA 1273 – Required Contract Provisions for Federal-Aid Construction Contracts

****

The Table of Contents for Division 00 and Division 01 may be prepared by the City. Project Manager and Design Consultant shall coordinate.

****

Doc. No.	Document Title	Doc. Date
	SPECIFICATIONS	
DIVISION 1 - GENERAL REQUIREMENTS		
01110	Summary of Work	06-27-2005
01145	Use of Premises	01-01-2011
01255	Change Order Procedures	08-01-2003
01270	Measurement and Payment	08-01-2003
01292	Schedule of Values	08-01-2003
01312	Coordination and Meetings	08-01-2003
01321	Construction Photographs	08-01-2003
01325	Construction Schedule	08-01-2003
01326	Construction Schedule (Bar Chart)	08-01-2003
01330	Submittal Procedures	08-01-2003
01340	Shop Drawings, Product Data, and Samples	08-01-2003
01351	Environmental Safety and Worker Protection	01-01-2011
01410	TPDES Requirements (with Attachments)	02-01-2011
01422	Reference Standards	08-01-2003
01450	Contractor's Quality Control	08-01-2003
01452	Inspection Services	08-01-2003
01454	Testing Laboratory Services	08-01-2003
01502	Mobilization	08-01-2008
01504	Temporary Facilities and Controls	01-01-2011
01506	Diversion Pumping	08-01-2003
01520	Temporary Field Office	02-08-2012
01555S	*Traffic Control and Regulation*	*04-22-2009*
*01555	Traffic Control and Regulation	01-01-2011
01562	Tree and Plant Protection	01-01-2011
01570	Storm Water Pollution Control	01-26-2012
01575	Stabilized Construction Access	02-01-2011
01576	Waste Material Disposal	08-01-2003
01578	Control of Ground and Surface Water	01-01-2011
01580	Project Identification Signs	08-01-2003
01581	Excavation in Public Way Permit Signs	08-01-2003
01610	Basic Product Requirements	01-01-2011
01630	Product Substitution Procedures	08-01-2003
01725	Field Surveying	01-01-2011
01731	Cutting and Patching	01-01-2011
01732	Procedure for Water Valve Assistance (with Attachments)	08-01-2003
01740	Site Restoration	08-01-2003
01755	Starting Systems	08-01-2003
01770	Closeout Procedures	08-01-2003
01782	Operations and Maintenance Data	08-01-2003
01785	Project Record Documents	08-01-2003

Doc. No.	Document Title	Doc. Date
DIVISION 2 - SITE WORK		
02081	CAST-IN-PLACE CONCRETE MANHOLES	01-01-2011
02082	PRECAST CONCRETE MANHOLES	01-01-2011
02083	FIBERGLASS MANHOLES	01-01-2011
02084	FRAMES, GRATES, RINGS, AND COVERS	08-01-2008
02085	VALVE BOXES, METER BOXES, AND METER VAULTS	01-01-2011
02086	ADJUSTING MANHOLES, INLETS, AND VALVE BOXES TO GRADE	01-01-2011
02087	BRICK MANHOLE FOR STORM SEWERS	10-01-2002
02136	WASTE MATERIAL HANDLING, TESTING AND DISPOSAL	01-01-2011
02201	SITE PREPARATION, GRADING, RESTORATION AND CLEAN UP FOR WATER STORAGE TANKS	01-01-2011
02221	REMOVING EXISTING PAVEMENTS AND STRUCTURES	07-01-2009
02222	ABANDONMENT OF SEWERS	01-01-2011
02233	CLEARING AND GRUBBING	01-01-2011
02260	TRENCH SAFETY SYSTEM	02-01-2011
02315	ROADWAY EXCAVATION	07-01-2009
02316	EXCAVATION AND BACKFILL FOR STRUCTURES	01-01-2011
02317	EXCAVATION AND BACKFILL FOR UTILITIES	01-01-2011
02318	EXTRA UNIT PRICE WORK FOR EXCAVATION AND BACKFILL	01-01-2011
02319	BORROW	01-01-2011
02320	UTILITY BACKFILL MATERIALS	01-01-2011
02321	CEMENT STABILIZED SAND	01-01-2011
02322	FLOWABLE FILL	08-01-2008
02330	EMBANKMENT	10-01-2002
02336	LIME-STABILIZED SUBGRADE	10-01-2002
02337	LIME/FLY-ASH STABILIZED SUBGRADE	10-01-2002
02338	PORTLAND CEMENT STABILIZED SUBGRADE	10-01-2002
02340	COMPACTED SANDFILL UNDER TANK FLOOR PLATE	01-01-2011
02400	TUNNEL SHAFTS	01-01-2011
02401	COMMON TUNNEL SHAFTS	01-01-2011
02425	TUNNEL EXCAVATION AND PRIMARY LINER	10-01-2002
02426	SEWER LINE IN TUNNELS	10-01-2002
02427	PLASTIC LINER FOR LARGE-DIAMETER CONCRETE SEWERS AND STRUCTURES	10-01-2002
02431	TUNNEL GROUT	10-01-2002
02441	MICROTUNNELING AND PIPE-JACKED TUNNELS	01-01-2011
02447	AUGERING PIPE AND CONDUIT	10-01-2002
02448	PIPE AND CASING AUGERING FOR SEWERS	10-01-2002
02465	DRILLED SHAFT FOUNDATIONS	10-01-2002
02476	CAISSON FOR LIFT STATION	01-01-2011

Doc. No.	Document Title	Doc. Date
02501	DUCTILE IRON PIPE AND FITTINGS	02-01-2011
02502	STEEL PIPE AND FITTINGS	01-01-2011
02503	COPPER TUBING	10-01-2002
02504	CENTRIFUGALLY CAST FIBERGLASS PIPE	02-01-2011
02505	HIGH DENSITY POLYETHYLENE (HDPE) SOLID AND PROFILE WALL PIPE	02-01-2011
02506	POLYVINYL CHLORIDE PIPE	01-01-2011
02507	PRESTRESSED CONCRETE CYLINDER PIPE	01-01-2011
02508	EXTRA STRENGTH CLAY PIPE	02-01-2011
02509	FIBERGLASS REINFORCED PIPE FOR PRESSURE MAINS	01-01-2011
02511	WATER LINES	01-01-2011
02512	WATER TAP AND SERVICE LINE INSTALLATION	04-27-2012
02513	WET CONNECTIONS	10-01-2002
02514	DISINFECTION OF WATER LINES	01-01-2011
02515	HYDROSTATIC TESTING OF PIPELINES	01-01-2011
02516	CUT, PLUG, AND ABANDONMENT OF WATER LINES	01-01-2011
02517	WATER LINE IN TUNNELS	10-01-2002
02518	STEEL PIPE AND FITTINGS FOR LARGE-DIAMETER WATER LINES	01-01-2011
02520	FIRE HYDRANTS	05-05-2011
02521	GATE VALVES	01-01-2011
02522	BUTTERFLY VALVES	01-01-2011
02523	PRESSURE REDUCING VALVES	10-01-2002
02524	AIR RELEASE AND VACUUM RELIEF VALVES	01-01-2011
02525	TAPPING SLEEVES AND VALVES	01-01-2011
02526	WATER METERS	01-01-2011
02527	POLYURETHANE COATINGS ON STEEL OR DUCTILE IRON PIPE	10-01-2002
02528	POLYETHYLENE WRAP	01-01-2011
02531	GRAVITY SANITARY SEWERS	01-01-2011
02532	SANITARY SEWER FORCE MAINS	01-01-2011
02533	ACCEPTANCE TESTING FOR SANITARY SEWERS	01-01-2011
02534	SANITARY SEWER SERVICE STUBS OR RECONNECTIONS	01-01-2011
02550	SLIPLINING SANITARY SEWERS	01-01-2011
02553	POINT REPAIR AND OBSTRUCTION REMOVALS	01-01-2011
02555	MANHOLE REHABILITATION	01-01-2011
02557	FOLDED AND FORMED PIPE	01-01-2011
02558	CLEANING AND TELEVISION INSPECTION	01-01-2011
02571	CRUSHING SANITARY SEWERS	01-01-2011
02581	STREET LIGHTING CONDUIT	10-01-2002
02582	TRAFFIC SIGNAL POLE ASSEMBLIES	07-01-2009
02611	REINFORCED CONCRETE PIPE	02-01-2011
02612	PRECAST REINFORCED CONCRETE BOX SEWERS	10-01-2002

Doc. No.	Document Title	Doc. Date
02613	BAR WRAPPED STEEL CYLINDER PIPE	01-01-2011
02621	GEOTEXTILE	10-01-2002
02631	STORM SEWERS	01-26-2012
02632	CAST-IN-PLACE INLETS, HEADWALLS, AND WINGWALLS	10-01-2002
02633	PRECAST CONCRETE INLETS, HEADWALLS, AND WINGWALLS	10-01-2002
02642	CORRUGATED METAL PIPE	10-01-2002
02643	PLATE CULVERT STRUCTURES	10-01-2002
02662	PIPING, VALVES, FITTINGS, AND ACCESSORIES FOR WATER STORAGE TANKS	01-01-2011
02711	HOT MIX ASPHALT BASE COURSE	07-01-2009
02712	CEMENT STABILIZED BASE COURSE	10-01-2002
02713	RECYCLED CRUSHED CONCRETE BASE COURSE	07-01-2009
02714	FLEXIBLE BASE COURSE FOR TEMPORARY DRIVEWAYS	07-01-2009
02741	ASPHALTIC CONCRETE PAVEMENT	07-01-2009
02742	PRIME COAT	10-01-2002
02743	TACK COAT	10-01-2002
02751	CONCRETE PAVING	07-01-2009
02752S	*Concrete Pavement Joints*	*12-29-2009*
*02752	CONCRETE PAVEMENT JOINTS	10-01-2002
02753	CONCRETE PAVEMENT CURING	10-01-2002
02754	CONCRETE DRIVEWAYS	09-01-2002
02761	COLORED CONCRETE FOR MEDIANS AND SIDEWALKS	09-01-2002
02762	BLAST CLEANING OF PAVEMENT	10-01-2002
02764	RAISED PAVEMENT MARKERS	10-01-2002
02765	TEMPORARY AND REMOVABLE REFLECTORIZED PAVEMENT MARKINGS	10-01-2002
02767	THERMOPLASTIC PAVEMENT MARKINGS	10-01-2002
02771	CURB, CURB AND GUTTER, AND HEADERS	10-01-2002
02772	CONCRETE MEDIANS AND DIRECTIONAL ISLANDS	10-01-2002
02775	CONCRETE SIDEWALKS	10-01-2002
02811	LANDSCAPE IRRIGATION	10-01-2002
02893	TRAFFIC SIGNAL CONSTRUCTION	07-01-2009
02911	TOPSOIL	10-01-2002
02912	TREE, PLANT, AND HARDSCAPE PROTECTION	07-01-2009
02915	TREE PLANTING	01-01-2011
02921	HYDROMULCH SEEDING	01-01-2011
02922	SODDING	07-01-2009
02951	PAVEMENT REPAIR AND RESTORATION	07-01-2009
02960	MILLING PAVEMENT	07-01-2009

Doc. No.	Document Title	Doc. Date
02983	REMOVAL AND RESTORATION OF BRICK-PAVED STREETS	10-01-2002
DIVISION 3 - CONCRETE		
03315	CONCRETE FOR UTILITY CONSTRUCTION	10-01-2002
DIVISION 4 - MORTAR		
04061	MORTAR	10-01-2002
04210	BRICK MASONRY FOR UTILITY CONSTRUCTION	10-01-2002
DIVISION 5 - METALS		
05501	METAL FABRICATIONS	01-01-2011
DIVISION 6 - WOOD AND PLASTICS		
DIVISION 7 - THERMAL AND MOISTURE PROTECTION		
DIVISION 8 - DOORS AND WINDOWS		
DIVISION 9 - FINISHES		
09901	PROTECTIVE COATINGS	01-01-2011
09971	HIGH BUILD GLAZED COATINGS	01-01-2011
DIVISION 10 - SPECIALTIES		
DIVISION 11 – EQUIPMENT		
DIVISION 12 - FURNISHINGS		
DIVISION 13 - SPECIAL CONSTRUCTION		
13111	CATHODIC PROTECTION FOR WATER TANK INTERIORS	01-01-2011
13112	CATHODIC PROTECTION FOR WATER TANK INTERIORS(ICCP)	01-01-2011
13113	CATHODIC PROTECTION FOR NEW TANK BOTTOMS	01-01-2011
13201	WELDED STEEL WATER STORAGE TANKS	01-01-2011
13202	REHABILITATION OF WELDED STEEL WATER STORAGE TANKS	01-01-2011
13203	TANK CLEAN-UP AND DISINFECTION	01-01-2011
DIVISION 14 - CONVEYING SYSTEMS		
DIVISION 15 – MECHANICAL		
15640	JOINT BONDING AND ELECTRICAL ISOLATION	01-01-2011
15641	CORROSION CONTROL TEST STATIONS	01-01-2011

Doc. No.	Document Title	Doc. Date
DIVISION 16 – ELECTRICAL		
16010	BASIC ELECTRICAL REQUIREMENTS	01-01-2011
16640	CATHODIC PROTECTION FOR PIPELINES	01-01-2011
16641	CATHODIC PROTECTION FOR EXISTING TANK BOTTOM	01-01-2011
16642	CATHODIC PROTECTION FOR PIPE LINE	01-01-2011
16644	CATHODIC PROTECTION FOR CLARIFIERS	01-01-2011
16645	CATHODIC PROTECTION FOR NEW TANK BOTTOMS	01-01-2011
16709	COMMUNICATIONS CONDUIT	07-01-2009
16710	PULL BOXES	07-01-2009
16711	TRAFFIC SIGNAL CONDUIT	07-01-2009
16715	VEHICLE SIGNAL HEADS	07-01-2009
16716	PEDESTRIAN SIGNAL HEADS	07-01-2009
16717	PROGRAMMABLE VEHICLE SIGNAL HEADS	07-01-2009
16718	LED VEHICLE TRAFFIC SIGNAL MODULE	07-01-2009
16719	COUNTDOWN PEDESTRIAN SIGNAL MODULE	07-01-2009
16720	TRAFFIC SIGNAL CABLE	07-01-2009
16724	EMERGENCY VEHICLE PREEMPTION (EVP)	07-01-2009
16730	ITS CONTROLLER CABINET ASSEMBLY	07-01-2009
16731	MODEL 2070 CONTROLLER UNIT	07-01-2009
16733	MANAGED FIELD HARDENED ETHERNET SWITCH	07-01-2009
16735	FIBER OPTIC SPLICE ENCLOSURE	07-01-2009
16736	FIBER DISTRIBUTION UNIT	07-01-2009
16737	COMMUNICATION SERVICE BOX	07-01-2009
16738	WIRELESS COMMUNICATION SYSTEM	07-01-2009
16740	SINGLE MODE FIBER OPTIC COMMUNICATION SYSTEM	07-01-2009
16742	VIDEO DETECTION SYSTEMS	07-01-2009
16743	CDMA MODEM ASSEMBLY	07-01-2009
16750	ACCESSIBLE PEDESTRIAN PUSH BUTTON STATION	07-01-2009

END OF DOCUMENT

Document 00015

LIST OF DRAWINGS

Sheet No.	Drawing Title
1	TITLE SHEET
2	INDEX SHEET
3	PROJECT LAYOUT
4	HARRIS COUNTY ENGINEERING DEPT EXPRESS REVIEW SHEET
5	TYPICAL SECTIONS
6	GENERAL NOTES (SHEET 1 OF 2)
7	GENERAL NOTES (SHEET 2 OF 2)
8	SUMMARY OF QUANTITIES
9	SUMMARY OF SMALL SIGNS
10	SURVEY CONTROL MAP
11	MKT TRAIL SPUR CONNECTOR PLAN AND PROFILE STA 0+00 TO STA 3+00
12	MKT TRAIL SPUR CONNECTOR PLAN AND PROFILE STA 3+00 TO STA 6+00
13	MKT TRAIL SPUR CONNECTOR PLAN AND PROFILE STA 6+00 TO END
14	CROSS SECTIONS STA 0+00 TO STA 2+50
15	CROSS SECTIONS STA 3+00 TO 6+00
16	CROSS SECTIONS STA 6+50 TO END
17	PAVEMENT PLAN DETAIL
18	CONCRETE PAVING DETAILS
19	CONCRETE BLOCK RETAINING WALL – RW (CB)
20	CONCRETE BLOCK RETAINING WALL UNDERDRAIN DETAILS
21	CONCRETE CHANNEL LINING DETAILS
22	CULVERT DRAINAGE AREA MAP AND DESIGN CALCULATIONS
23	CULVERT LAYOUT
24	EXCAVATION AND BACKFILL DIAGRAMS
25	CONCRETE HEADWALLS CH-FW-0
26	STUDE PARK SPUR BRIDGE LAYOUT
27	STUDE PARK SPUR BRIDGE ABUTMENT DETAILS
28	STUDE PARK SPUR BEARING SEAT DETAILS
29	STUDE PARK SPUR APPROACH SLAB DETAILS
30	PEDESTRIAN RAIL – TYPE PR1
31	SIGN LAYOUT
32	BICYCLE LANE PAVEMENT MARKINGS
33	GENERAL NOTES AND GROUND SIGN MOUNTING
34	STORM WATER POLLUTION PREVENTION PLAN

35	STORM WATER POLLUTION PREVENTION PLAN DETAILS – SHEET 1 OF 2
36	STORM WATER POLLUTION PREVENTION PLAN DETAILS – SHEET 2 OF 2
37	ENVIRONMENTAL PERMITS ISSUES AND COMMITMENTS – SHEET 1 OF 3 (HOUSTON DISTRICT)
38	ENVIRONMENTAL PERMITS ISSUES AND COMMITMENTS – SHEET 2 OF 3 (HOUSTON DISTRICT)
39	ENVIRONMENTAL PERMITS ISSUES AND COMMITMENTS – SHEET 3 OF 3 (HOUSTON DISTRICT)
40	FERTILIZER, SEED, SOD, STRAW, COMPOST AND WATER (HOUSTON DISTRICT)
41	CITY OF HOUSTON PROJECT IDENTIFICATION SIGNS
42	BORING LOGS (SHEET 1 OF 2)
43	BORING LOGS (SHEET 2 OF 2)
44	USACOE LETTER

END OF DOCUMENT

Document 00041

LIST OF PRE-QUALIFIED ASBESTOS/LEAD ABATEMENT, MOLD & SOIL REMEDIATION, DEMOLITION AND PETROLEUM STORAGE TANK REMOVAL CONTRACTORS

1.01 DOCUMENT INCLUDES

A. Authorization

B. List of Authorized Contractors.

2.0 RELATED DOCUMENTS

A. Section 13280 – Hazardous Materials Remediation

B. Section 13281&13282 – Abatement of Asbestos/Lead Containing Materials

3.0 AUTHORIZATION

A. The list of Contractors Pre-qualified for Asbestos/Lead Abatement, Mold & Soil Remediation, Demolition & Petroleum Storage Tank Removal ("List") was authorized on March 21, 2012, by City of Houston Council Motion No. 12-0180.

B. Only those firms on the List can be utilized by Bidder in subcontracting for asbestos & lead abatement, mold & soil remediation, demolition & petroleum storage tank removal included in the Work.

C. The List is administered by General Services Department. All inquiries should be directed to Gabriel Mussio (832-393-8079).

4.0 LIST OF AUTHORIZED CONTRACTORS

A. As of the date specified in paragraph 3.0.A., all contractors listed in paragraph 4.0.B were licensed in the State of Texas for the type of work. Authorized Contractors must maintain there license to be on the list.

B. Authorized Contractors:

1. AAR Incorporated, 6640 Signat Drive, Houston, Texas 77041

2. A & M Environmental, LLC, 6536 Supply Row, Houston, Texas 77011

3. ARC Abatement Inc., 6827 Signat Drive, Houston, Texas 77041

4. AIA General Contractors, Inc., 18331 Running Vine Lane, Spring, Texas 77379

5. Arrow Services, Inc., 10202 Airline Drive, Suite A, Houston, Texas 77037

6. Basic Environmental Group, LLC., 1839 Key Biscayne Court, Houston,

Texas 77065

7. Cherry Environmental Services, Inc., 4501 Cherry Lane, Santa Fe, Texas 77517

8. Clark-Tech Environmental Systems, Inc., 1515 Globe Street, Houston, Texas 77034

9. CRG Environmental Services, LLC., 2504 Avenue I, Rosenberg, Texas 77471

10. DNB Enterprises, Inc., 12969 West Hardy, Houston, Texas 77037

11. Dunphey Petroleum Services, Inc., 3505 Daphne, Houston, Texas 77021

12. EC Government Services, 5850 San Felipe, Suite 400, Houston, Texas 77057

13. Effective Environmental, Inc., 9950 Chemical Road, Pasadena, Texas 77507

14. GenTech Construction Company, LLC., 2211 West 34th Street, Houston, Texas 77018

15. Hazard Assessment Leaders, Inc., dba HAL, Inc., 5311 Petty Street, Houston, Texas 77007

16. Inland Environmental, Ltd., PO Box 6751, Kingwood, Texas 77325

17. J.T.B. Services, Inc., 9026 Lambright, Houston, Texas 77075

18. NCM, 16421 Aldine Westfield Road, Houston, Texas 77032

19. PfP Abatement Group, LLC., 3823 Shadow Trail Drive, Houston, Texas 77084

20. PEMCO, Inc., PO Box 2009, Pearland, Texas 77588-2009

21. RNDI Companies, Inc., 2255 Ridge Road, Suite 216, Rockwell, Texas 75807

22. Separation Systems Consultants, Inc., 17041 El Camino Real, Suite 200 Houston, Texas 77058

23. Texas Environmental Control, Inc., 4623 Steffani Lane, Houston, Texas 77041

24. Weston Solutions, Inc., 5599 San Felipe, Suite 700, Houston, Texas 77056

25. 1 Priority Environmental Services, Inc., 2573 Gravel Drive, Fort Worth, Texas 76118

END OF DOCUMENT

****

List of Changes:

04-30-2004: Added List of Changes, Notice to Bidders Section. Defined new term (Code). Provided information on how errors in extending unit prices and totaling alternates would be handled. Changed document number for Notice of Intent to Award.

12-10-2004: Corrected paragraph references in Paragraphs 6.0.B, 11.0.B.2 and 11.0.C.3.

02-28-2006: Deleted Paragraphs 9.0.D and 9.0.J. Guidance on how to handle math errors in Bid Form is provided in tabular form in Document 00210 – Supplementary Instructions to Bidders.

08-10-2006: Added Small Business Enterprise (SBE) title and DBE to Paragraph 12.0 B.

04-12-2013: Added required no-contact/quiet period language as Paragraph 3.0 C., drawn from the City Procurement Manual.

02-26-2014: Add the updated no-contact/quiet period language as Paragraph 3.0 C., again drawn from the City Procurement Manual.

06-09-2015: Added language stating that Minimum Bid Prices may not be decreased in Paragraph 9.0 E.

****

Document 00042

DESIGNATED SUBCONTRACTORS AND SUPPLIERS

A. Subcontract work for the following Sections to firm(s) listed and for reason(s) stated below:

****
Edit following list. Ensure individual Sections include names of designated firms and the reason is stated here. Use the following sample format.
****

1. [Section 12610- Open Office Furniture; procurement and installation of Open Office Furniture. The City has an existing procurement/installation contract with the firm stated in Section 12610.]

END OF DOCUMENT

Document 00200

TABLE OF CONTENTS

INSTRUCTIONS TO BIDDERS

PARA	TITLE	PAGE
1.0	*RELATED DOCUMENTS*	3
2.0	*DEFINITIONS*	3
3.0	*NOTICE TO BIDDERS*	3
4.0	*BID DOCUMENTS*	4
5.0	*EXAMINATION OF DOCUMENTS, SITE, AND LOCAL CONDITIONS*	4
6.0	*INTERPRETATIONS DURING BIDDING*	4
7.0	*ADDENDA*	4
8.0	*SUBSTITUTION OF PRODUCTS*	5
9.0	*PREPARATION OF BIDS*	5
10.0	*BID SUBMISSION*	5
11.0	*BID SECURITY*	5
12.0	*SUBCONTRACTORS AND SUPPLIERS*	6
13.0	*MODIFICATION OR WITHDRAWAL OF BID*	6
14.0	*BID DISQUALIFICATION*	6
15.0	*PREBID MEETING*	6
16.0	*OPENING OF BIDS*	6
17.0	*EVALUATION AND CONSIDERATION OF BIDS*	6
18.0	*ACCEPTANCE OF THE BID*	6

Document 00200

INSTRUCTIONS TO BIDDERS

1.0 *RELATED DOCUMENTS*

A. Document 00210 – Supplementary Instructions to Bidders.

B. Document 00320 – Geotechnical Information.

C. Document 00330 – Existing Conditions.

D. Document 00410 – Bid Form, Parts A & B.

E. Document 00495 – Post-Bid Procedures.

F. Document 00520 – Agreement.

G. Document 00700 – General Conditions.

H. Document 00800 – Supplementary Conditions.

2.0 *DEFINITIONS*

A. Definitions set forth in Document 00700 – General Conditions and in other documents of Project Manual, are applicable to Bid Documents.

B. *Addendum:* Written or graphic instrument issued prior to Bid opening, which clarifies, modifies, corrects, or changes Bid Documents.

C. *Alternate:* The total amount bid for additions to work, as described in Section 01110 – Summary of Work. Each Alternate includes cost of effects on adjacent or related components, and Bidder's overhead and profit.

D. *Bid:* A complete and properly signed offer to perform the Work in accordance with this Document and Document 00210 – Supplementary Instructions to Bidders.

E. *Bid Date:* Date and time set for receipt of Bids as stated in Document 00210 – Supplementary Instructions to Bidders, or as modified by Addenda.

F. *Bid Documents:* Project Manual, Drawings, and Addenda.

G. *Bid Supplement: A* Bid submittal that is required in Document 00410 – Bid Form.

H. *Bidder:* Person or firm, identified in Document 00410B – Bid Form – Part B, including its successors, and its authorized representative.

I. *Code:* Code of Ordinances, Houston, Texas.

J. *Low Bidder:* Apparent successful Bidder that qualifies as a responsible Bidder and that submits Bid with lowest Total Bid Price.

K. *Project Manager:* Person designated in Document 00100 – Advertisement for Bids and Document 00220 – Request for Bid Information to represent the City during bidding and post-bid periods.

L. *Project Manual:* Volume assembled for the Work that includes the bidding requirements, sample forms, Conditions of the Contract, and Specifications.

M. *Security Deposit:* A certified check, cashier's check, or bid bond in the amount of 10 percent of the Total Bid Price.

N. *Total Bid Price:* Total amount bid for performing the Work as identified by Bidder in Document 00410B – Bid Form – Part B, which amount includes:

1. Stipulated Price;
2. Total Base Unit Prices;
3. Total Extra Unit Prices;
4. Total Cash Allowances; and
5. Total Alternates.

3.0 *NOTICE TO BIDDERS*

A. The City of Houston Fair Campaign Ordinance makes it unlawful for a Contractor to offer any contribution to a candidate for City elective office (including elected officers and officers-elect) during a certain period of time prior to and following the award of the Contract by the City Council. The term "Contractor" includes proprietors of proprietorships, all partners of partnerships, and all officers, directors, and holders of 10 percent or more of the outstanding shares of corporations. A statement disclosing the names and business addresses of each of those persons will be required to be submitted with each bid or proposal; for a City Contract. Bidder shall complete and submit Document 00452 – Form A, Contractor Submission List, City of Houston Fair Campaign Ordinance, with its Bid to comply with this requirement. See Chapter 18 of the Code for further information.

B. Chapter 15, Article VIII, of the City's Code provides that no contract shall be let, nor any other business transaction entered into, by the City with any person indebted to the City or a qualifying entity, if the contractor or transaction comes within the provisions of Section 15-1 (c) of the Code. Exceptions are provided in Section 15-126 of the Code. Bidder shall complete and submit Document 00455 – Affidavit of Ownership or Control, with its Bid to comply with this requirement.

C. Neither bidder(s) nor any person acting on bidder(s)'s behalf shall attempt to influence the outcome of the award by the offer, presentation or promise of gratuities, favors, or anything of value to any appointed or elected official or employee of the City of Houston, their families or staff members. All inquiries regarding the solicitation are to be directed to the designated City Representative identified on the first page of the solicitation. Upon issuance of the solicitation through the pre-award phase and up to the date the City Secretary publicly posts notice of any City Council agenda containing the applicable award, aside from bidder's formal response to the solicitation, through the pre-award phase, written requests for clarification during the period officially designated for such purpose by the City Representative, neither bidder(s) nor persons acting on their behalf shall communicate with any appointed or elected official or employee of the City of Houston, their families or staff through written or oral means in an attempt to persuade or influence the outcome of the award or to obtain or deliver information intended to or which could reasonably result in an advantage to any bidder. However, nothing in this paragraph shall prevent a bidder from making public statements to the City Council convened for a regularly scheduled session after the official selection has been made and placed on the City Council agenda for action, or to a City Council committee convened to discuss a recommendation regarding the solicitation.

4.0 *BID DOCUMENTS*

A. The Bid Documents may be obtained at location specified in Document 00210 – Supplementary Instructions to Bidders.

B. The Bid Documents are made available only for the purpose of bidding on the Work. Receipt of Bid Documents does not grant a license for other purposes.

C. On receipt of Bid Documents, Bidder shall verify that documents are legible and complete, compare contents of Project Manual with Document 00010 – Table of Contents, and compare Index of Drawings with Document 00015 – List of Drawings. Bidder shall notify Project Manager if Bid Documents are incomplete.

D. If City of Houston Standard Specifications or Standard Details are required by the Project Manual, Bidder shall refer to Document 00210 – Supplementary Instructions to Bidders for purchase information.

5.0 *EXAMINATION OF DOCUMENTS, SITE, AND LOCAL CONDITIONS*

A. Bidder shall examine Project site, become familiar with local conditions under which the Work shall be performed, conduct appropriate investigations, and correlate personal observations with requirements of the Bid Documents before submitting a Bid.

B. Bidder shall make site investigations to the extent Bidder deems necessary to ascertain extent of subsurface conditions.

C. Failure of Bidder to perform the investigations prior to submitting a Bid does not relieve Bidder of responsibility for investigations, interpretations and proper use of available information in the preparation of its Bid.

D. Bidder shall observe limitations of access to occupied or restricted site as stated in Document 00210 – Supplementary Instructions to Bidders.

6.0 *INTERPRETATIONS DURING BIDDING*

A. Bidder shall immediately submit Document 00220 – Request for Bid Information to Project Manager upon finding errors, discrepancies, or omissions in Bid Documents. Confirmation of receipt of questions by the City is the responsibility of Bidder. Verbal discussions and answers are not binding.

B. Document 00220 – Request for Bid Information must be received at least 10 days before the Bid Date to allow issuance of Addenda in accordance with Paragraph 7.O.D. Replies, if issued, are by Addenda.

7.0 *ADDENDA*

A. Addenda that affect bidding requirements are applicable only during applicable only through issuance of the Notice to Proceed. Addenda that affect the Contract are a part of the Contract.

B. BIDDERS WHO SUBMIT A BID ON THIS PROJECT SHALL BE PRESUMED TO HAVE RECEIVED ALL ADDENDA AND TO HAVE INCLUDED ANY COST THEREOF IN THEIR BIDS, REGARDLESS OF WHETHER THEY ACKNOWLEDGE THE ADDENDA OR NOT.

C. The City will make Addenda available at same location where the Bid Documents may be obtained. The City will notify plan holders of record when Addenda are available. Bidders are responsible for obtaining Addenda after notification.

D. No Addendum will be issued later than noon on Monday before Bid Date, except Addenda with minor clarifications, withdrawing request for Bids, or postponing Bid Date.

8.0 *SUBSTITUTION OF PRODUCTS*

A. No substitutions of Products will be considered during the bidding period.

9.0 *PREPARATION OF BIDS*

A. Bidder shall fill in applicable blanks in Document 00410A&B – Bid Form – Parts A & B and Bid Supplements. In addition, Bidder shall bid all Alternates. Bidder shall properly sign Document 00410B -Bid Form.

B. Bidder shall initial all pages, except signature page, of Document 00410B – Bid Form – Part B.

C. Bidder is responsible for all costs incurred by the Bidder, associated with preparation of its Bid and compliance with Post-bid Procedures.

D. Bidder may not adjust preprinted price on line items stating "Fixed Unit Price" in the description on the Bid Form.

E. Bidder may increase, but not decrease, preprinted price on line items stating "Minimum Bid Price" in the description on the Bid Form by crossing out the minimum and inserting revised price on the line above. Bidder **may not** decrease the preprinted price on line items stating "Minimum Bid Price".

F. Bidder may decrease, but not increase, preprinted price on line items stating "Maximum Bid Price" in the description on the Bid Form by crossing out the maximum and inserting revised price on the line above. Bidder **may not** increase the preprinted price on line items stating "Maximum Bid Price".

G. Bidder shall insert a price no greater than the maximum preprinted range and no less than the preprinted range for line items stating "Fixed Range Unit Price" in the description on the Bid Form by crossing out prices noted and inserting revised price on the line above.

H. Bidder may not adjust Cash Allowance amounts.

10.0 *BID SUBMISSION*

A. City Secretary will receive Bids on Bid Date at location specified in Document 00210 – Supplementary Instructions to Bidders.

B. Bids submitted after Bid Date will be returned to Bidder unopened.

C. Verbal, facsimile, or electronic Bids are invalid and will not be considered.

D. Bidder shall submit in person or by mail one copy of the signed Document 00410 – Bid Form, Parts A and B, along with required Security Deposit, and required Bid Supplements, in a sealed, opaque envelope. In addition, Bidder shall clearly identify Project, Bid Date and Bidder's name on outside of envelope. If forwarded by mail, the sealed envelope containing the Bid must be enclosed in another envelope addressed for postal delivery.

11.0 *BID SECURITY*

A. Bidder shall submit a Security Deposit with its Bid.

B. Certified Check or Cashier's Check

1. Bidder shall make check payable to the City of Houston.

2. A check is submitted on the condition that if Bidder is named Low Bidder and fails either to timely and properly submit documents required in Document 00495 – Post-Bid Procedures, the City will cash the check in accordance with Paragraph 11.0.E.

C. Bid Bond

1. The bid bond must be a valid and enforceable bond, signed by a surety that complies with other requirements set out by law.

2. The bid bond must name the City of Houston as obligee, and be signed by the Bidder as principal and signed and sealed by the surety.

3. The bid bond must be conditioned such that if Bidder is named Low Bidder and then fails to timely and properly submit documents required in Document 00495 – Post-Bid Procedures, surety will be obligated to pay to the City an amount in accordance with Paragraph 11.0.E.

D. Security Deposits will be retained until after the Contract is awarded or all Bids are rejected.

E. Low Bidder forfeits Security Deposit if it fails to timely and properly submit documents required in Document 00495 – Post-Bid Procedures. The City may claim an amount equal to the difference between the Total Bid Price of the defaulting Bidder and the Total Bid Price of the Bidder awarded the Contract. If Security Deposit is a check, the City will reimburse any remaining balance to the defaulting Bidder.

12.0 *SUBCONTRACTORS AND SUPPLIERS*

A. The City may reject proposed Subcontractors or Suppliers.

B. Refer to Document 00800 – Supplementary Conditions, for MWBEPDBE, DBE and SBE goals.

13.0 *MODIFICATION OR WITHDRAWAL OF BID*

A. A Bidder may modify or withdraw a Bid submitted before the Bid Date by written notice to the City Secretary. The notice may not reveal the amount of the original Bid and must be signed by the Bidder.

B. Bidder may not modify or withdraw its Bid by verbal, facsimile, or electronic means.

C. A withdrawn Bid may be resubmitted up to the time designated for receipt of Bids.

14.0 *BID DISQUALIFICATION*

A. The City may disqualify a Bid if the Bidder:

1. fails to provide required Security Deposit in the proper amount;

2. improperly or illegibly completes information required by the Bid Documents;

3. fails to sign Bid or improperly signs Bid;

4. qualifies its Bid; or

5. improperly submits its Bid.

B. When requested, Low Bidder shall present satisfactory evidence that Bidder has regularly engaged in performing construction work as proposed, and has the capital, labor, equipment, and material to perform the Work.

15.0 *PREBID MEETING*

A. A prebid meeting is scheduled to be held at the place, time, and date listed in Document 00210 – Supplementary Instructions to Bidders.

B. All Bidders, subcontractors, and suppliers are invited to attend.

C. Representatives of City Engineer will attend.

16.0 *OPENING OF BIDS*

A. Bids are opened by the City Secretary and publicly read in City Council Chambers on the Public Level in City Hall Annex at 11:00 a.m. on Bid Date.

B. Place and date of Bid opening may be changed in accordance with Sections 15-3(b)(5) and 15-3(b)(6) of the City Code.

17.0 *EVALUATION AND CONSIDERATION OF BIDS*

A. Project Manager will tabulate, record and evaluate Bids.

B. The City may reject all Bids or may reject any defective Bid.

18.0 *ACCEPTANCE OF THE BID*

A. The City will send to Low Bidder Document 00498 – Notice of Intent to Award. Acceptance by the City is conditioned upon Bidder's timely and proper submittal of documents required in Document 00495 – Post-Bid Procedures.

B. The Bid remains open to acceptance and is irrevocable for the period of time stated in Document 00410A – Bid Form – Part A.

END OF DOCUMENT

Document 00210-T

TxDOT-FUNDED SUPPLEMENTARY INSTRUCTIONS TO BIDDERS

The following Paragraphs modify Document 00200 - Instructions to Bidders. Where a portion of the Instructions to Bidders is modified or deleted by these Supplementary Instructions, the unaltered portions of the Instructions to Bidders remains in effect.

2.0 – DEFINITIONS: Add the following Paragraphs to this Section:

O. *Office of Business Opportunity (OBO):* All references to Affirmative Action Contract Compliance Division (AACC) set forth in Document 00700 – General Conditions and in other documents of the Project Manual, shall refer to, and include, the Office of Business Opportunity.

P. *Certificate of Responsibility:* An unexpired and unrevoked letter from the Director containing an identification number and stating that a Bidder has met the minimum qualifications to bid on street and bridge contracts within the amount and type of bidding capacity, based on Texas Department of Transportation (TxDOT) determination of Bidder's capability and approval of financial stability.

Q. *Director:* Director, Department of Public Works and Engineering, City of Houston.

3.0 - NOTICE TO BIDDERS: Add the following Paragraph to this Section:

C. This is a City Street and Bridge Construction or Improvement Contract which requires a current Certificate of Responsibility filed with the Director no later than three business days prior to Project Bid Date. A Certificate of Responsibility is a valid Prequalification Approval Letter issued by TxDOT stating that a Bidder is qualified to bid on State Highway improvement contracts pursuant to 43 Texas Administrative Code, Section 9.12, as it may be amended from time-to-time, and Chapter 15, Article IV of the Code of Ordinances, Houston, Texas (the "Ordinance").

4.0 – BID DOCUMENTS: Add the following Paragraphs to this Section:

A. Add the following Paragraph A.1:

1. Bid documents may only be obtained electronically at the City's website: http://bidsets.publicworks.houstontx.gov/ .

D. Add the following Paragraph D.1:

1. Copies of the City Standard Specifications and Details may be acquired at no cost on the City's website **http://documents.publicworks.houstontx.gov/document-center/specifications/index.htm**

E. The following plan rooms, whose names, addresses, phone and fax numbers were last updated on April 9, 2007, have been authorized by the City to display Bid Documents for examination:

1. AMTEK Information Services, Inc., 4001 Sherwood Lane, Houston, TX 77092, 713-956-0100, Fax 713-956-5340, Email: planroom@amtekusa.com

2. Associated Builders & Contractors, Inc., (ABC), 3910 Kirby, Suite 131, Houston, TX 77098-4151, 713-523-6222, Fax 713-874-0747. Email: lori@abchouston.org

3. Associated General Contractors (AGC-BB) Building Branch, 3825 Dacoma, Houston, TX 77092-8717, 713-843-3700, Fax 713-843-3701. Email: karla.s@agchouston.org

4. Associated General Contractors, (AGC-HHUI), Highway, Heavy Utilities and Industrial Branch, 2400 Augusta St., Suite 180, Houston, TX 77057, 713-334-7100, Fax 713-334-7130. Email: houston@agctx.org (Attention: Mel Keyser)

5. Construction Information Network, 1225 North Loop West, Suite 550, Houston, TX 77008, 713-868-2233 ext. 329, Fax 866-852-2713. Email: paul.tilford@cnsx.com

6. F. W. Dodge Corporation, 4101 Greenbriar, Suite 320, Houston, TX 77098, 713-529-4895, Fax 713-524-7639. Email: terrie_harris@mcgraw-hill.com

7. Hispanic Contractors Association of Houston (HCA-GHA), 11 Parker Road, Suite 7, Houston, TX 77241, 713-699-2732 or 832-754-3705, Fax 713-695-1556, Email: hispanicontractorsassociation@yahoo.com; or Randymagdaleno@yahoo.com

8. Houston Minority Business Development Center, 2900 Woodridge, Suite 124, Houston, TX 77087, 713-644-0821, Fax 713-644-3523. Email: gtamez@gacompanies.com

9. Reed Construction Data, 30 Technology Parkway South, Suite 100, Norcross, GA – 30092-8629. Tel. 1-800-424-3996 or 1-800-699-8640; Fax 1-800-317-0870 or 1-800-508-5370.

10. The Builders' Exchange of Texas, Inc., 3910 Kirby, Suite 131, Houston, TX 77098, 210-564-6900, Fax: 210-564-6921, Email: houston@bxtx.com

5.0 - EXAMINATION OF DOCUMENTS, SITE, AND LOCAL CONDITIONS: Insert the following paragraph:

D. Add the following Paragraph D.1:

1. Work will be performed in public right-of-way. The site may be examined at any time during daylight hours.

9.0 – PREPARATION OF BIDS: Add the following Paragraph I to this Paragraph:

I. For math errors the City encounters in analyzing Bids, the following guidance will be used:

In the event of a conflict between:	The Bid Price is:
1. Individual Unit Price and Extension of that Unit Price	Individual Unit Price times Estimated Quantity
2. A Unit Price extension and total of Unit Price Extensions	Sum of all Individual Unit Price Extensions
3. Individual Alternate and total of Alternates	Sum of all Individual Alternates
4. Individual subtotals for Stipulated Price, Base Unit Prices, Extra Unit Prices, Contractor Bonus, Cash Allowances, and Alternates; and the Total Bid Price	Sum of Individual subtotals for Stipulated Price, Base Unit Prices, Extra Unit Prices, Contractor Bonus, Cash Allowances and Alternates

10.0 – BID SUBMISSION: Add the following Paragraph A.1 to this Section:

A. Add the following Paragraph A.1:

1. City Secretary will receive Bids at 900 Bagby, Room P101, Houston, Texas until 10:30 a.m., local time on December 17, 2015.

D. Submit one copy of the executed offer on the bid forms provided, properly signed, with required Security Deposit, and other Supplements to Bid Forms, in a sealed, opaque envelope. On the outside of the envelope, clearly identify the Certificate of Responsibility number, Bidders name, Project name, and the City's name. Bids submitted by mail shall be enclosed in a separate envelope addressed for mailing, and identifying the enclosure as a bid.

E. Bidders are responsible for obtaining a Certificate of Responsibility number for the class of contract indicated in Document 00210 – Supplementary Instructions to Bidders. TxDOT Certificate of Qualification letter must be filed with the Director not less than three days prior to Project Bid opening. Bidders who do not have a City of Houston Certificate of Responsibility will be notified by the City.

14.0 – BID DISQUALIFICATION: Delete paragraphs A and B and replace with the following paragraph A:

A. The City shall disqualify a Bid if the Bidder:

1. fails to provide required Security Deposit in the proper amount;
2. improperly or illegibly completes information required by the Bid Documents;
3. fails to sign Bid or improperly signs Bid;
4. qualifies its Bid; or
5. improperly submits its Bid.

15.0 – PREBID MEETING: Add the following Paragraph A.1 to this Section:

A. Add the following Paragraph A.1:

1. A Prebid Meeting will be held at 10:00 A.M. on Tuesday, December 1, 2015, in 14th Floor, Conference Room No. 14-B (Outside) at 611 Walker, Houston, Texas 77002.

END OF DOCUMENT

Document 00220

REQUEST FOR BID INFORMATION

PROJECT: Missouri Kansas Texas (MKT) Trail Spur Connector

PROJECT No.: WBS No. N-320420-030A-4 / CSJ 0912-72-299

TO: Raymond Fong
14th Floor
611 Walker, Houston, Texas 77002

Phone No. (832) 395-2211
Fax No. (832) 395-2252
Email Addr. raymond.fong@houstontx.gov

(Type or Print question legibly; use back if more space is needed)

This request relates to _____ and/or _____
Drawing / Detail No. Specification Section No.

Attachments to this request: _____

Signature _____ Date _____

(Type or Print Name) _____

(Type or Print Company Name) _____

END OF DOCUMENT

Document 00320

GEOTECHNICAL INFORMATION

1. DOCUMENT INCLUDES

   A. Soils investigation reports.

   B. Bidder's responsibilities.

2. RELATED DOCUMENTS

   A. Section 02260 - Trench Safety Systems

3. SITE INVESTIGATION REPORTS

   A. In the design and preparation of Contract documents for this Project, the City and Design Consultant have used information in geotechnical reports for the investigation and analysis of soils and subsurface conditions at the Project site.

   B. An electronic copy of the report for this project is included in a CD-Rom affixed to the inside front cover of the project manual.

   C. Neither the City nor Design Consultant is responsible for accuracy or completeness of any information or data.

4. GEOTECHNICAL REPORTS

   A. Report No.TWEI 15.13.077, prepared by the firm of Tulane-Wong Engineers Inc.
   entitled Geotechnical Study MKT Spur Connector and Bikeway Bridge, White Oak Bayou, Houston,Texas dated July 2015,
   consisting of 72 pages.

5. BIDDER RESPONSIBILITIES

   A. Bidder shall take full responsibility for interpretation and use of information contained in above listed reports for its bidding and construction purposes.

   B. Bidder may perform additional soils investigations as Bidder deems appropriate.

END OF DOCUMENT

Document 00410A

BID FORM – PART A

To: **The Honorable Mayor and City Council of the City of Houston**
City Hall Annex
900 Bagby Street
Houston, Texas 77002

Project: Missouri Kansas Texas (MKT) Trail Spur Connector
Project No.: WBS No. N-320420-030A-4 / CSJ 0912-72-299
Bidder: _____
(Print or type full name of business entity, such as corporation, LLC, etc)

1.0 OFFER

A. Total Bid Price: Having examined the Project location and all matters referred to in Bid Documents for the Project, we, the undersigned, offer to enter into a Contract to perform the Work for the Total Bid Price shown on the signature page of this Document

B. Security Deposit: Included with the Bid is a Security Deposit in the amount of 10 percent of the Total Bid Price subject to terms described in Document 00200 – Instructions to Bidders.

C. Period for Bid Acceptance: This offer is open to acceptance and is irrevocable for 90 days from Bid Date. That period may be extended by mutual written agreement of the City and Bidder.

D. Addenda: All Addenda have been received. Modifications to Bid Documents have been considered and all related costs are included in the Total Bid Price.

E. Bid Supplements: The following documents are attached:

[X] Security Deposit *(as defined in Document 00200 – Instructions to Bidders)*
[X] Document 00450 - Bidder's Statement of MWSBE Status
[X] Document 00452 - Contractor's Submission List - Fair Campaign Ordinance Form A
[X] Document 00453 – Bidder's Statement of Residency *(not required for AIP funded project)*
[X] Document 00454 - Affidavit of Non-interest
[X] Document 00455 - Affidavit of Ownership or Control
[X] Document 00456 - Bidder's Certificate of Compliance with Buy American Program *(required for AIP funded project)*
[X] Document 00457 – Conflicts of Interest Questionnaire (CIQ)
[X] Document 00458 - Bidder's Certificate Regarding Foreign Trade Restriction *(required for AIP funded project)*
[ ] Document 00459 - Contractor's Statement Regarding Previous Contracts Subject to EEO *(required for AIP funded project)*
[X] Document 00460 – Pay or Play Acknowledgement Form (POP 1-A)

[X] Document 00470 – Bidder's MWSBE Participation Plan *(required unless no MWSBE participation goal is provided in Document 00800* (the "Goal")*)*.

[ ] Document 00471 – Bidder's Record of Good Faith Efforts *(required if the goal in Bidder's Participation Plan–Document 00470 is lower than the Goal).*

[ ] Document 00472 – Bidder's Goal Deviation Request *(required if the goal in Bidder's Participation Plan–Document 00470 is lower than the Goal).*

[X] Others as listed: Valid official letter from OBO with your designation as a City or Local Business *(Bidder's Participation Hire Houston First)*

2.0 CONTRACT TIME

A. If offer is accepted, Contractor shall achieve Date of Substantial Completion within 180 days after Date of Commencement of the Work, subject to adjustments of Contract Time as provided in the Contract.

Document 00410B

BID FORM – PART B

1.0 TOTAL BID PRICE HAS BEEN CALCULATED BY BIDDER, USING THE FOLLOWING COMPONENT PRICES AND PROCESS (PRINT OR TYPE NUMERICAL AMOUNTS):

A. STIPULATED PRICE: $_____

(Total Bid Price; minus Base Unit Prices, Extra Unit Prices, Cash Allowances and All Alternates, if any)

B. BASE UNIT PRICE TABLE:

Item No.	Spec Ref.	Base Unit Short Title	Unit of Measure	Estimated Quantity	Unit Price (this column controls)	Total in figures
1	01502	MOBILIZATION	LS	1		
2	01554	TRAFFIC SIGN	EA	3		
3	01555	TRAFFIC CONTROL	LS	1		
4	01570	FILTER FABRIC FENCE	LF	2,300		
5	01570	REINFORCED FILTER FABRIC BARRIER	LF	1,500		
6	01575	STABILIZED CONSTRUCTION EXIT	SY	502		
7	02233	CLEARING AND GRUBBING (INCLUDES TREE REMOVAL)	AC	0.4		
8	02260	TRENCH SAFETY	LF	1100		
9	02315	ROADWAY EXCAVATION	CY	1063		
10	02315	EMBANKMENT FILL (OPTIONAL)	CY	353		
11	02336	LIME STABILIZED SUBGRADE	SY	943		
12	02336	HYDRATED LIME	TON	23		
13	02631	4" PVC Storm Sewer	LF	628		

Bidder's Initials [ ]

Item No.	Spec Ref.	Base Unit Short Title	Unit of Measure	Estimated Quantity	Unit Price (this column controls)	Total in figures
14	02631	RCP CL III (24 IN)	LF	54		
15	02632	HEADWALL (24 IN)	EA	2		
16	02751	6-INCH REINFORCED CONCRETE PAVING	SY	1,048		
17	02767	THERMOPLASTIC PAVEMENT MARKINGS (Y) 4" WIDE	LF	2,045		
18	TXDOT 161-6017	COMPOST MANURE TOPSOIL	SY	451		
19	TXDOT 161-6002	BLOCK SODDING	SY	777		
20	TXDOT 161-6001	FERTILIZER	AC	0.1		
21	TXDOT 161-6001	VEGETATIVE WATERING	MG	11.2		
22	TXDOT 423-2006	RETAINING WALL (CONCRETE BLOCK)	SF	4,752		
23	TXDOT 450-2025	RAIL (TYP PR1)	LF	511		
24	TXDOT 416-6001	DRILL SHAFT (18 IN) FOR RETAINING WALL	LF	390		
25	TXDOT 416-6004	DRILL SHAFT (36 IN) FOR BRIDGE	LF	172		
26	TXDOT 420-6013	CL C CONC (ABUT)	CY	17		
27	TXDOT 422-6015	APPROACH SLABS	CY	20		
28	SS-9007	PEDESTRIAN TRUSS BRIDGE (120 FT SPAN)	EA	1		
					TOTAL BASE UNIT PRICES	

Bidder's Initials [ ]

C. EXTRA UNIT PRICE TABLE:

Item No.	Spec Ref.	Extra Unit Short Title	Unit of Measure	Estimated Quantity	Unit Price (this column controls)	Total in figures
29	02315	EXTRA CEMENT STABILIZED SAND BACKFILL	CY	50	$ _____ ($25.00)[3]	$ _____ ($1,250.00)[3]
30	02318	EXTRA MACHINE EXCAVATION	CY	50	$ _____ ($10.00)[3]	$ _____ ($500.00)[3]
31	02318	EXTRA REPLACEMENT OF BACKFILL MATERIAL	CY	50	$ _____ ($5.00)[3]	$ _____ ($250.00)[3]
32	02318	EXTRA HAND EXCAVATION AROUND OBSTRUCTIONS	CY	50	$ _____ ($15.00)[3]	$ _____ ($750.00)[3]
33	03211	EXTRA GRADE 60 REINFORCING STEEL IN PLACE	TON	0.5	$_____ (1.00)[2]	$ _____ (1,000.00)[2]
34	03310	EXTRA CLASS "A" CONCRETE INSTALLED IN PLACE FOR STRUCTURES	CY	2	$_____ (600.00)[2]	$ _____ (1,200.00)[2]
TOTAL EXTRA UNIT PRICES						$_____

D. CASH ALLOWANCE TABLE:

Item No.	Spec Ref.	Cash Allowance Short Title	Cash Allowance in figures [1]
35	01145	Permit Fees	$10,000[1]
TOTAL CASH ALLOWANCES			$10,000[1]

E. TOTAL BID PRICE: $_____

(Add Totals for Items A., B., C. and D. above)

Bidder's Initials [ ]

2.0 SIGNATURES: By signing this Document, I agree that I have received and reviewed all Addenda and considered all costs associated with the Addenda in calculating the Total Bid Price.

Bidder: _____
(Print or type full name of your proprietorship, partnership, corporation, or joint venture.*)

**By: _____
Signature Date

Name: _____
(Print or type name) Title

Address: _____
(Mailing)

_____
(Street, if different)

Telephone and Fax Number: _____
(Print or type numbers)

* If Bid is a joint venture, add additional Bid Form signature sheets for each member of the joint venture.

** Bidder certifies that the only person or parties interested in this offer as principals are those named above. Bidder has not directly or indirectly entered into any agreement, participated in any collusion, or otherwise taken any action in restraint of free competitive bidding.

Note: This document constitutes a government record, as defined by § 37.01 of the Texas Penal Code. Submission of a false government record is punishable as provided in § 37.10 of the Texas Penal Code.

Footnotes for Tables B through E:
(1) Fixed Unit Price determined prior to Bid. Cannot be adjusted by the Bidder.
(2) Minimum Bid Price determined prior to Bid. Can be increased by the Bidder by crossing out the Minimum and noting revised price on the line above.
(3) Maximum Bid Price determined prior to Bid. Can be decreased but not increased by Bidder by crossing out the Maximum and noting revised price on the line above. A Bid that increases the Maximum Bid Price may be found non-conforming and non-responsive.
(4) Fixed Range Bid Price determined prior to Bid. Unit Price can be adjusted by Bidder to any amount within the range defined by crossing out prices noted and noting revised price on the line above.

Document 00430

BIDDER'S BOND

THAT WE, _____, as Principal,
(Bidder)
("Bidder"), and the other subscriber hereto, _____, as Surety, do hereby acknowledge ourselves to be held and firmly bound to the City of Houston, a municipal corporation, in the sum of _____ Dollars ($_____) (an amount equal to 10 percent of the Total Bid Price, including Cash Allowances and Alternates, if any, for the payment of which sum, well and truly to be made to the City of Houston and its successors, the Bidder and Surety do bind themselves, their heirs, executors, administrators, successors, and assigns, jointly and severally.

THE CONDITIONS OF THIS OBLIGATION ARE SUCH THAT:

WHEREAS, the Bidder has submitted on or about this day a proposal offering to perform the following:

_____
(Project Name, Location and Number)
in accordance with the Drawings, Specifications, and terms and conditions related thereto to which reference is hereby made.

NOW, THEREFORE, if the Bidder's offer as stated in the Document 00410 – Bid Form is accepted by the City, and the Bidder executes and returns to the City Document 00520 – Agreement, required by the City, on the forms prepared by the City, for the Work and also executes and returns the same number of the Performance, Payment and Maintenance Bonds (such bonds to be executed by a Corporate Surety authorized by the State Board of Insurance to conduct insurance business in the State of Texas, and having an underwriting limitation in at least the amount of the bond) and other submittals as required by Document 00495 - Post-Bid Procedures, in connection with the Work, within the Contract Time, then this obligation shall become null and void; otherwise it is to remain in full force and effect.

If Bidder is unable to or fails to perform the obligations undertaken herein, the undersigned Bidder and Surety shall be liable to the City for the full amount of this obligation which is hereby acknowledged as the amount of damages which will be suffered by the City on account of the failure of such Bidder to perform such obligations, the actual amount of such damages being difficult to ascertain.

Notices required or permitted hereunder shall be in writing and shall be deemed delivered when actually received or, if earlier, on the third day following deposit in a United States Postal Service post office or receptacle, with proper postage affixed (certified mail, return receipt requested), addressed to the respective other Party at the address prescribed in the Contract documents, or at such other address as the receiving Party may hereafter prescribe by written notice to the sending Party.

IN WITNESS THEREOF, the Bidder and Surety have signed and sealed this instrument on the respective dates written below their signatures and have attached current Power of Attorney.

ATTEST, SEAL: (if a corporation)
WITNESS: (if not a corporation)

By: _____
Name:
Title:

ATTEST/SURETY WITNESS: (SEAL)

By: _____
Name:
Title:
Date:

_____
(Name of Bidder)

By: _____
Name:
Title:
Date:

_____
(Full Name of Surety)

_____
(Address of Surety for Notice)

_____
(Telephone Number of Surety)

By: _____
Name:
Title:
Date:

END OF DOCUMENT

Bidder's Initials [ ]

Document 00452
Form A
CONTRACTOR SUBMISSION LIST
CITY OF HOUSTON FAIR CAMPAIGN ORDINANCE

The City of Houston Fair Campaign Ordinance makes it unlawful for a Contractor to offer any contribution to a candidate for City elective office (including elected officers-elect) during a certain period of time prior to and following the award of the Contract by the City Council. The term "Contractor" includes proprietors of proprietorships, partners or joint venturers having an equity interest of 10 percent or more for the partnership or joint venture, and officers, directors and holders of 10 percent or more of the outstanding shares of corporations. Submission of a statement disclosing the names and business addresses of each of those persons is required with each Bid/Proposal for a City Contract. See Chapter 18 of the City of Houston Code of Ordinances for further information.

This list is submitted under the provisions of Section 18-36(b) of the City of Houston Code of Ordinances in connection with the attached Bid/Proposal of:

Firm or Company Name: _____
Firm or Company Address: _____
_____

The firm/company is organized as indicated below. Check one as applicable and attach additional pages if needed to supply the required names and addresses.

[ ] SOLE PROPRIETOR

Name _____ _____
Proprietor Address

[ ] A PARTNERSHIP

LIST EACH PARTNER HAVING EQUITY INTEREST OF 10% OR MORE OF PARTNERSHIP (IF NONE STATE "NONE")

Name _____ _____
Partner Address

Name _____ _____
Partner Address

[ ] A CORPORATION

LIST ALL DIRECTORS OF THE CORPORATION (IF NONE STATE "NONE")

Name _____ _____
Director Address

Name _____ _____
Director Address

Name _____ _____
Director Address

LIST ALL OFFICERS OF THE CORPORATION (IF NONE STATE "NONE")

Name _____ _____
Officer Address

Name _____ _____
Officer Address

Name _____ _____
Officer Address

LIST ALL INDIVIDUALS OWNING 10% OR MORE OF OUTSTANDING SHARES OF STOCK OF THE CORPORATION (IF NONE STATE "NONE")

Name _____ _____
Owner Address

Name _____ _____
Owner Address

Name _____ _____
Owner Address

I certify that I am duly authorized to submit this list on behalf of the firm, that I am associated with the firm in the capacity noted below, and that I have knowledge of the accuracy of the information provided herein.

_____
Signature

_____
Printed Name

_____
Title

Note: This list constitutes a government record as defined by § 37.01 of the Texas Penal Code.

END OF DOCUMENT

Document 00453

BIDDER'S STATEMENT OF RESIDENCY

The City may not award a contract for general construction, services, or purchases to a Nonresident Bidder unless Nonresident's Bid is lower than the lowest Bid submitted by a responsible Texas Resident Bidder by the same amount that a Texas Resident bidder would be required to underbid the Nonresident Bidder to obtain a comparable contract in the state in which Nonresident's principle place of business is located.

1. This certifies that the Bidder, _____, is a State of Texas Resident Bidder as defined in TEX. GOVT. CODE ANN. § 2252.001(4) (Vernon 1994).

   _____ Signature _____ Title

   "Texas Resident Bidder" means a bidder whose principal place of business is in this State, and includes a Contractor whose ultimate parent company or majority owner has its principal place of business in this State. *When bidder cannot sign 1, above, proceed to 2.*

2. a. _____ is a resident of _____ and is a Nonresident Bidder as defined in TEX. GOVT. CODE ANN. § 2252.001(3) (Vernon 1994).

   _____ Signature _____ Title

   "Nonresident Bidder" means a bidder whose principal place of business is not in this State, but excludes a contractor whose ultimate parent company or majority owner has its principal place of business in this State.

   b. The State of _____ (Bidder's resident state) _____ (Does or Does Not) have a state statute giving preference to resident bidders.

   _____ Signature _____ Title

   If the answer to 2.b is that your state does have a statute giving preference to resident bidders, then you must provide a copy and proceed to 3.

3. A copy of the State of _____ statute is attached.

   _____ Signature _____ Title

   _____ Date

END OF DOCUMENT

Document 00454

AFFIDAVIT OF NON-INTEREST

BEFORE ME, the undersigned authority, a Notary Public in and for the State of Texas, on this day personally appeared _____, who
Affiant

being by me duly sworn on his oath stated that he is _____, of
Title

_____,
Name of Firm

the firm named and referred to and in the foregoing; and that he knows of no officer, agent, or employee of the City of Houston being in any manner interested either directly or indirectly in such Contract.

_____
Affiant's Signature

SWORN AND SUBSCRIBED before me on _____.
Date

_____
Notary Public in and for the State of TEXAS

_____
Print or type name

My Commission Expires: _____
Expiration Date

END OF DOCUMENT

ORIG. DEPT.: PUBLIC WORKS AND ENGINEERING **FILE/I.D. NO.:** WBS No.N-320420-030A-4

INSTRUCTION: ENTITIES USING AN ASSUMED NAME SHOULD DISCLOSE SUCH FACT TO AVOID REJECTION OF THE AFFIDAVIT. THE FOLLOWING FORMAT IS RECOMMENDED: CORPORATE/LEGAL NAME DBA ASSUMED NAME.

STATE OF _____ §
§ **AFFIDAVIT OF OWNERSHIP OR CONTROL**
COUNTY OF _____ §

BEFORE ME, the undersigned authority, on this day personally appeared _____ [*FULL NAME*] (hereafter "Affiant"), _____ [*STATE TITLE/CAPACITY WITH CONTRACTING ENTITY*] of _____ [*CONTRACTING ENTITY'S CORPORATE/LEGAL NAME*] ("Contracting Entity"), who being by me duly sworn on oath stated as follows:

1. Affiant is authorized to give this affidavit and has personal knowledge of the facts and matters herein stated.

2. Contracting Entity seeks to do business with the City in connection with _____ [*DESCRIBE PROJECT OR MATTER*] which is expected to be in an amount that exceeds $50,000.

3. The following information is submitted in connection with the proposal, submission or bid of Contracting Entity in connection with the above described project or matter.

4. Contracting Entity is organized as a business entity as noted below (check box as applicable).

FOR PROFIT ENTITY:

[ ] SOLE PROPRIETORSHIP
[ ] CORPORATION
[ ] PARTNERSHIP
[ ] LIMITED PARTNERSHIP
[ ] JOINT VENTURE
[ ] LIMITED LIABILITY COMPANY
[ ] OTHER (Specify type in space below)

NON-PROFIT ENTITY:

[ ] NON-PROFIT CORPORATION
[ ] UNINCORPORATED ASSOCIATION

_____

_____

_____

5. The information shown below is true and correct for the Contracting Entity and all owners of 5% or more of the Contracting Entity and, where the Contracting Entity is a non-profit entity, the required information has been shown for each officer, *i.e.*, president, vice-president, secretary, treasurer, etc. ***[NOTE: IN ALL CASES, USE FULL NAMES, LOCAL BUSINESS AND RESIDENCE ADDRESSES AND TELEPHONE NUMBERS. DO NOT USE POST OFFICE BOXES FOR ANY ADDRESS. INCLUSION OF E-MAIL ADDRESSES IS OPTIONAL, BUT RECOMMENDED. ATTACH ADDITIONAL SHEETS AS NEEDED.]***

Contracting Entity

Name: _____

Business Address *[NO./STREET]* _____

[CITY/STATE/ZIP CODE] _____

Telephone Number (____)_____

Email Address *[OPTIONAL]* _____

Residence Address *[NO./STREET]* _____

[CITY/STATE/ZIP CODE] _____

Telephone Number (____)_____

Email Address *[OPTIONAL]* _____

5% Owner(s) or More (IF NONE, STATE "NONE.")

Name: _____

Business Address *[NO./STREET]* _____

[CITY/STATE/ZIP CODE] _____

Telephone Number (____)_____

Email Address *[OPTIONAL]* _____

Residence Address *[NO./STREET]* _____

[CITY/STATE/ZIP CODE] _____

Telephone Number (____)_____

Email Address *[OPTIONAL]* _____

6. *Optional Information*

Contracting Entity and/or _____ [***NAME OF OWNER OR NON-PROFIT OFFICER***] is actively protesting, challenging or appealing the accuracy and/or amount of taxes levied against _____ [***CONTRACTING ENTITY, OWNER OR NON-PROFIT OFFICER***] as follows:

Name of Debtor: _____

Tax Account Nos. _____

Case or File Nos. _____

Attorney/Agent Name _____

Attorney/Agent Phone No. (_____)_____

Tax Years _____

Status of Appeal *[**DESCRIBE**]* _____

_____

_____

_____

Affiant certifies that he or she is duly authorized to submit the above information on behalf of the Contracting Entity, that Affiant is associated with the Contracting Entity in the capacity noted above and has personal knowledge of the accuracy of the information provided herein, and that the information provided herein is true and correct to the best of Affiant's knowledge and belief.

_____
Affiant

SWORN TO AND SUBSCRIBED before me this _____ day of _____, 20_____.

(Seal)

_____
Notary Public

NOTE:
This affidavit constitutes a **government record** as defined by Section 37.01 of the Texas Penal Code. Submission of a false government record is punishable as provided in Section 37.10 of the Texas Penal Code. Attach additional pages if needed to supply the required names and addresses.

Document 00456

BIDDER'S CERTIFICATION OF COMPLIANCE WITH BUY AMERICAN PROGRAM (AVIATION SAFETY AND CAPACITY EXPANSION ACT OF 1990)

By submitting a bid, except for those items listed by Bidder below or on additional copies of this page, attached to this page, Bidder certifies that steel and each manufactured product, is produced in the United States (as defined in the clause Buy American - Steel and Manufactured Products for Construction Contracts) and that components of unknown origin are considered to have been produced or manufactured outside the United States. In case of conflicts with corresponding provisions of other Bidding Documents, Buy American Program provisions govern.

Bidders may obtain from the City a list of products excepted from this provision. Use additional copies of this page as required.

PRODUCT	COUNTRY OF ORIGIN

The above information is true and complete to the best of my knowledge and belief.

(Printed or typed Name of Signatory)

Signature

Date

Note: The penalty for making false statements in offers is prescribed in 18 U.S.C. 1001.

END OF DOCUMENT

Document 00457

Conflict of Interest Questionnaire

****

Print out latest version of CIQ form from website listed below:

****

Local Government Code Chapter 176 requires Bidders with the City of Houston ("City") to file a Conflict of Interest Questionnaire with the City Secretary of the City of Houston.

The Conflict of Interest Questionnaire is available for downloading on the Texas Ethics Commission's website at: http://www.ethics.state.tx.us/forms/CIQ.pdf. The completed Conflict of Interest Questionnaire will be posted on the City Secretary's website. Also you will find a list of the City Local Government Officers on the City Secretary's website.

For your convenience the CIQ form is attached as part of this document. Although the City has provided this document for the Bidders convenience, it is the Bidders responsibility to submit the latest version of the CIQ form as promulgated by the Texas Ethics Commission.

The Failure of any Bidder to comply with this law is a Class C misdemeanor.

END OF DOCUMENT

Document 00458

BIDDER'S CERTIFICATION REGARDING FOREIGN TRADE RESTRICTIONS (49 CFR PART 30)

The undersigned certifies that Contractor (a) is not owned or controlled by one or more citizens or nationals of a foreign country included in the list of countries that discriminate against U.S. firms published by the Office of the United States Trade representative (USTR); (b) has not knowingly entered into any contract or subcontract for this project with a contractor that is a citizen or national of a foreign country on said list, or is owned or controlled directly or indirectly by one or more citizens or nationals of a foreign country on said list; (c) has not procured any product nor subcontracted for the supply of any product for use in the Work that is produced in a foreign country on said list.

Unless the restrictions of this clause are waived by the Secretary of Transportation in accordance with 49 CFR 30.17, no contract shall be awarded to a contractor or subcontractor who is unable to certify to the above. If Contractor knowingly procures or subcontracts for the supply of any product or service of a foreign country on said list for use in the Work, the Federal Aviation Administration may direct, through the sponsor, cancellation of the Contract at no cost to the Government.

Further, Contractor agrees that, if awarded a contract, Contractor will incorporate this provision for certification without modification in each contract and in all lower tier subcontracts. Contractor may rely upon the certification of a prospective subcontractor unless Contractor has knowledge that the certification is erroneous. Contractor shall provide immediate written notice to the City if Contractor learns that its certification or that of a Subcontractor was erroneous when submitted or has become erroneous by reason of changed circumstances. Subcontractor agrees to provide immediate written notice to Contractor, if at any time it learns that Subcontractor certification was erroneous by reason of changed circumstances.

This certification is a material representation of fact upon which reliance was placed when making the award. If it is later determined that Contractor or Subcontractors knowingly rendered an erroneous certification, the Federal Aviation Administration may direct, through the City, cancellation of the Contract or subcontract for default at no cost to the City.

Nothing contained in the foregoing shall be construed to require establishment of a system of records in order to render, in good faith, certification required by this provision. The knowledge and information of Contractor is not required to exceed that which is normally possessed by a prudent person in the ordinary course of business dealings.

This certification concerns a matter within the jurisdiction of an agency of the United States of America and the making of a false, fictitious, or fraudulent certification may render the maker subject to prosecution under Title 18, United States Code, Section 1001.

Certification- The above information is true and complete to the best of my knowledge and belief.

_____
(Printed or typed Name of Signatory)

_____ _____
Signature Date

Note: The penalty for making false statements in offers is prescribed in 18 U.S.C. 1001.

END OF DOCUMENT

Document 00459

CONTRACTOR'S STATEMENT REGARDING PREVIOUS CONTRACTS SUBJECT TO EQUAL EMPLOYMENT OPPORTUNITY

Section 60-1.7(b) of the Regulations of the Secretary of Labor requires each bidder or prospective prime contractor and proposed subcontractor, where appropriate, to state in the bid or at the outset of negotiations for the contract whether it has participated in any previous contract or subcontract subject to the equal opportunity clause; and if so, whether it has filed with the Joint Reporting Committee, the Director, an agency, or the former President's Committee on Equal Employment Opportunity all reports due under the applicable filing requirements. In any case in which a bidder or prospective prime contractor or proposed subcontractor which participated in a previous contract subject to Executive Order 10925, 11114. or 11246 has not filed a report due under the applicable filing documents, no contract or subcontract shall be awarded unless such contractor submits a report covering the delinquent period or such other period specified by the FAA or the Director, OFCCP.

Contractor has __ has not __ participated in a previous contract subject to the equal opportunity clause prescribed by Executive Order 10925, or Executive Order 11114, or Executive Order 11246.

Contractor has __ has not __ submitted all compliance reports in connection with any such contract due under the applicable filing requirements; and that representations indicating submission of required compliance reports signed by proposed subcontractors will be obtained prior to award of subcontracts.

If Contractor has participated in a previous contract subject to the equal opportunity clause and has not submitted compliance reports due under applicable filing requirements, Contractor (Proposer) shall submit a compliance report on Standard Form 100, "Employee Information Report EEO-1" prior to the award of the Contract.

Standard Form 100 is normally furnished to contractors annually, based on a mailing list currently maintained by the Joint Reporting Committee. In the event Contractor has not received the form, Contractor may obtain it by writing to the following address:

Joint Reporting Committee
1800 G Street
Washington, DC 20506

_____
(Printed or typed Name of Signatory)

_____ _____
Signature Date

_____
Title

_____
Contractor's Firm Name

NOTE: The penalty for making false statements in offers is prescribed in 18 U.S.C. 1001.

END OF DOCUMENT

Document 00495-T

POST-BID PROCEDURES
FOR TXDOT FUNDED PROJECTS

1. DOCUMENT ADDRESSES

   A. Notice of Intent to Award

   B. Monitoring Authority

   C. Requirements of Bidder

   D. Failure of Bidder to comply with requirements

   E. Notice to Proceed

2. NOTICE OF INTENT TO AWARD

   A. The City will provide written Notice of Intent to Award to Low Bidder.

3. DEFINITIONS

   A. The "Monitoring Authority" for this Project is:
   Director, Mayor's Office of Business Opportunity
   City of Houston
   611 Walker Street, 7th Floor
   Houston, Texas 77002

   B. The "Contracting Department" for this Project is:
   Director, Department of DEPARTMENT OF PUBLIC WORKS AND ENGINEERING
   City of Houston
   611 Walker Street
   Houston, Texas 77002
   ATTN: **Raymond Fong,**

4. REQUIREMENTS OF BIDDER

   A. Within10 days of receipt of Notice of Intent to Award, Low Bidder shall execute and deliver to Raymond Fong, Project Manager and Monitoring Authority, for the City's approval, documents indicated by an "X" below:
   [X] Executed Subcontract(s), Letter(s) of Intent, or documentation of good faith efforts to meet the MWBE/PDBE/DBE/SBE goals

B. Within 10 days of receipt of Notice of Intent to Award, Low Bidder shall execute and deliver to Raymond Fong, Project Manager for the City's approval, documents indicated by an "X" below:

[ ] Document 00500 - Form of Business
[X] Document 00501 - Resolution of Contractor
[X] Document 00520-T - Agreement
[X] Document 00600 - List of Proposed Subcontractors and Suppliers
[X] Document 00601 - Drug Policy Compliance Agreement
[X] Document 00602 - Contractor's Drug-free Workplace Policy *(Contractor creates this document.)*
[X] Document 00604 - History of OSHA Actions and List of On-the-job Injuries
[X] Document 00605 - List of Safety Impact Positions *(Contractor completes this list. Do not submit if submitting Document 00606.)*
[ ] Document 00606 - Contractor's Certification of No Safety Impact Positions *(Do not submit if submitting Document 00605.)*
[X] Document 00610 - Performance Bond
[X] Document 00611 - Statutory Payment Bond
[X] Document 00612-T - One-year Warranty Bond
[X] Document 00620 - Affidavit of Insurance *(with Certificate of Insurance attached)*
[X] Document 00622 - Name and Qualifications of Proposed Superintendent *(Contractor creates this document.)*
[X] Document 00624 - Affidavit of Compliance with S/WMBE Program
[ ] Document 00625 - SRF Participation Summary
[ ] Document 00626 - SRF Affirmative Steps Solicitation Report
[ ] Document 00627 - SRF Prime Contractor Affirmative Steps Certification and Goals
[ ] Document 00629 - Affidavit for FAA Form 7460-1
[ ] Document 00630 - Certification of Compliance with Pay or Play Program
[ ] Document 00631 - City of Houston Pay or Play Program – List of Subcontractors

C. Within 10 days of receipt of Notice of Intent to Award, Low Bidder shall execute the following forms and deliver them directly to the Monitoring Authority.

1. Original forms contained in Document 00805 – Equal Employment Opportunity Program Requirements:

[ ] Pages 00805-3 to 00805-5, Certification by Bidder Regarding Equal Employment Opportunity
[ ] Page 00805-6, Total Work Force Composition of the Company, or copy of latest EEO-1 form (required only if Contractor has a work force of 50 or more people and the Original Contract Price is $50,000 or more)
[ ] Page 00805-7, Equal Employment Opportunity Compliance Program
[ ] Page 00805-26, Certification by Proposed Subcontractor Regarding Equal Employment Opportunity

[ ] *Page 00805-29, Certification by Proposed Material Supplier, Lessor, and Professional Service Providers Regarding Equal Employment Opportunity*

2. Original completed form Document 00633 - Certification by Proposed Material Suppliers, Lessors, and Professional Service Providers Regarding Equal Employment Opportunity, for each proposed material supplier and equipment supplier.

3. Original forms contained in Document 00820 – Wage Scale for Engineering Construction.
   [ ] *Certificate from Contractor Appointing Officer or Employee to Supervise Payment of Employees*
   [ ] *Certificate from SubContractor Appointing Officer or Employee to Supervise Payment of Employees*
   [ ] Document 00812, Exhibit "A" – Certificate from Contractor Appointing Officer or Employee to Supervise Payment of Employees

D. Designations of Subcontractors and Suppliers, who have been selected by Bidder in Document 00600 - List of Proposed Subcontractors and Suppliers, and accepted by the City, may be changed only with prior notice and acceptance by Project Manager as provided in Conditions of the Contract. For each Product Supplier subsequently added or substituted, provide an original completed form, Document 00633 - Certification by Proposed Material Suppliers, Lessors, and Professional Service Providers Regarding Equal Employment Opportunity, directly to the Monitoring Authority.

E. On Bidder's written request, Raymond Fong, Project Manager may grant an extension of time, not to exceed 5 days, to furnish documents specified in Paragraphs 4.0.A and 4.0.B. If Bidder is required to resubmit documents specified in Paragraph 4.0.A or 4.0.B, Bidder shall do so within time limits provided in the request for resubmission.

Designations of Subcontractors and Suppliers, who have been selected by Bidder in Document 00600 - List of Proposed Subcontractors and Suppliers, and accepted by the City, may be changed only with prior notice and acceptance by Project Manager as provided in Conditions of the Contract. For each Product Supplier subsequently added or substituted, provide an original completed form, Document 00633 - Certification by Proposed Material Suppliers, Lessors, and Professional Service Providers Regarding Equal Employment Opportunity, directly to the Monitoring Authority.

E. On Bidder's written request, Raymond Fong, Project Manager may grant an extension of time, not to exceed 5 days, to furnish documents specified in Paragraphs 4.0.A and 4.0.B. If Bidder is required to resubmit documents specified in Paragraph 4.0.A or 4.0.B, Bidder shall do so within time limits provided in the request for resubmission.

F. Designations of Subcontractors and Suppliers, who have been selected by Bidder in its Participation Plan, and accepted by the City, may be changed only with prior notice and

acceptance by the Monitoring Authority as provided in Document 00806-T– Disadvantaged Business Enterprise Program Requirements.

5. FAILURE OF BIDDER TO COMPLY WITH REQUIREMENTS

A. Should Bidder, on receipt of Notice of Intent to Award, fail to comply with requirements of this Document 00495-T within stated time, the City may declare award in default and require forfeiture of the Security Deposit.

B. After the City's written notice of default to Low Bidder, the City may award the Contract to Bidder whose offer is the next lowest bid, and Security Deposit of Bidder in default shall be forfeited to the City in accordance with provisions of Document 00200-T - Instructions to Bidders.

6. NOTICE TO PROCEED

A. Upon the City's execution of the Agreement and delivery to Contractor, City Engineer will give Document 00551 - Notice to Proceed to Contractor, which establishes Date of Commencement of the Work.

END OF DOCUMENT

Document 00501

RESOLUTION OF CONTRACTOR

_____ ("Contractor"),
(Name of Contractor, e.g., "Biz. Inc.", "Biz LLP")

is a _____,
(Type of Organization, e.g.: Corporation, Limited Partnership, Limited Liability Partnership, Limited Liability Company, etc.)

which is bound by acts of _____,
(Name and Form of Governing Entity, e.g., "Biz Inc. Board of Directors", "Bill Smith, GP", etc.)

("Governing Entity").

On the _____ day of _____, 20_____, the Governing Entity resolved, in accordance with all documents, rules, and laws applicable to the Contractor, that _____, is authorized to act as the
(Contractor's Representative)

Contractor's Representative in all business transactions (initial one) ____ conducted in the State of Texas OR ____ related to this Contract; and

The Governing Entity warrants that the above resolution (a) was entered into without dissent or reservation by the Governing Entity, (b) has not been rescinded or amended, and (c) is now in full force and effect; and

In authentication of the adoption of this resolution, I subscribe my name on this day of _____, 20___.

_____ _____
(Authorized Signature for Governing Entity) (Print or Type Name and Title of Authorized Signatory)

SWORN AND SUBSCRIBED before me on _____
Date

_____
Notary Public in and for the State of Texas

My Commission Expires: _____ _____
Expiration Date Print or Type Name of Notary Public

Document 00520-T

AGREEMENT

Project: Missouri Kansas Texas (MKT) Trail Spur Connector

Project Location: Project generally bounded by MKT Rails to Trails to Heritage Trail (under Studewood Street bridge (Key Map No. 493 E)

Project No: WBS No. N-320420-030A-4 / CSJ 0912-72-299

The City: THE CITY OF HOUSTON, 900 Bagby Street, Houston, Texas 77002 (the "City")

and

Contractor: _____

(Address for Written Notice) _____

_____

Fax Number: _____ **Phone Number:** _____

City Engineer, with respect to Sections 4.3 thru 4.5 of the General Conditions, is:

J. Timothy Lincoln, P.E. (or his successor)

P. O. Box 1562, Houston, Texas 77251-1562 (Address for Written Notice)

Fax Number: 832-394-9622

City Engineer, with respect to all other terms of the General Conditions, is:

Joseph T. Myers, P.E. (or his successor)

Fax Number: 832-395-2410

THE CITY AND CONTRACTOR AGREE AS FOLLOWS:

ARTICLE 1
THE WORK OF THE CONTRACT

1.1 Contractor shall perform the Work in accordance with the Contract.

ARTICLE 2
CONTRACT TIME

2.1 Contractor shall achieve Date of Substantial Completion within 180 days after Date of Commencement of the Work, subject to adjustments of Contract Time as provided in the Contract.

2.2 The Parties recognize that time is of the essence for this Agreement and that the City will suffer financial loss if the Work is not completed within the Contract Time. Parties also recognize delays, expense, and difficulties involved in proving in a legal or arbitration proceeding actual loss suffered by the City if the Work is not completed on time. Accordingly, instead of requiring any such proof, the Parties agree that as liquidated damages for delay (but not as a penalty), Contractor shall pay the City the amount stipulated in Document 00800 – Supplementary Conditions, for each day beyond Contract Time.

ARTICLE 3
CONTRACT PRICE

3.1 Subject to terms of the Contract, the City will pay Contractor in current funds for Contractor's performance of the Contract, Contract Price of $_____ which includes Alternates, if any, accepted below.

3.2 The City accepts Alternates as follows:

****
Delete or add lines below to indicate all Alternates that were included in Request for competative sealed proposals. Remove brackets and instructions when done. Change color of remaining text to black.
****

Alternate No. 1 _____ [*Accepted or Not Accepted*] _____
Alternate No. 2 _____ [*Accepted or Not Accepted*] _____
Alternate No. 3 _____ [*Accepted or Not Accepted*] _____
Alternate No. 4 _____ [*Accepted or Not Accepted*] _____

ARTICLE 4
PAYMENTS

4.1 The City will make progress payments to Contractor as provided below and in Conditions of the Contract.

4.2 The Period covered by each progress payment is one calendar month ending on the 15th, or [___] last day of the month.

4.3 The City will issue Certificates for Payment and will make progress payments on the basis of such Certificates as provided in Conditions of the Contract.

4.4 Final payment, constituting entire unpaid balance of Contract Price, will be made by the City to Contractor as provided in Conditions of the Contract.

ARTICLE 5
CONTRACTOR REPRESENTATIONS

5.1 Contractor represents:

5.1.1 Contractor has examined and carefully studied Contract documents and other related data identified in the Request For Competitive Sealed Proposals or Competitive Sealed Bids.

5.1.2 Contractor has visited the site and become familiar with and is satisfied as to general, local, and site conditions that may affect cost, progress, and performance of the Work.

5.1.3 Contractor is familiar with and is satisfied as to all federal, state, and local laws and regulations that may affect cost, progress, and performance of the Work.

5.1.4 Contractor has carefully studied all: (1) reports of explorations and tests of subsurface conditions at or contiguous to the site and all drawings of physical conditions in or relating to existing surface or subsurface structures at or contiguous to the site (except Underground Facilities) which have been identified in Contract documents and (2) reports and drawings of a hazardous environmental condition, if any, at the site which has been identified in Contract documents.

5.1.5 Contractor has obtained and carefully studied (or assumes responsibility for having done so) all additional or supplementary examinations, investigations, explorations, tests, studies, and data concerning conditions (surface, subsurface, and Underground Facilities) at or contiguous to the site which may affect cost, progress, or performance of the Work or which relate to any aspect of the means, methods, techniques, sequences, and procedures of construction to be employed by Contractor, including applying specific means, methods, techniques, sequences, and procedures of construction, if any, expressly required by the Contract to be employed by Contractor, and safety precautions and programs incident thereto

5.1.6 Contractor does not consider that any further examinations, investigations, explorations, tests, studies, or data are necessary for performance of the Work at Contract Price, within Contract Time, and in accordance with the Contract.

5.1.7 Contractor is aware of general nature of work to be performed by the City and others at the site that relates to the Work as indicated in Contract documents.

5.1.8 Contractor has correlated information known to Contractor, information and observations obtained from visits to the site, reports and drawings identified in the Contract, and all additional examinations, investigations, explorations, tests, studies, and data with the Contract.

5.1.9 Contractor has given City Engineer written notice of all conflicts, errors, ambiguities, or discrepancies that Contractor has discovered in the Contract, and written resolution thereof by City Engineer is acceptable to Contractor.

5.1.10 Contract documents are generally sufficient to indicate and convey understanding of all terms and conditions for performance and furnishing of the Work.

ARTICLE 6
MISCELLANEOUS PROVISIONS

6.1 The Contract may be terminated by either Party as provided in Conditions of the Contract.

6.2 The Work may be suspended by the City as provided in Conditions of the Contract.

ARTICLE 7
ENUMERATION OF CONTRACT DOCUMENTS

7.1 The following documents are incorporated into this Agreement:

7.1.1 Document 00700 - General Conditions.

7.1.2 Document 00800-T – TxDOT Supplementary Conditions.

7.1.3 General Requirements.

7.1.4 Divisions 02 through 16 of Specifications.

7.1.5 Drawings listed in Document 00015 - List of Drawings. Drawing No. and bound separately.

7.1.6 Addenda [and Riders] which apply to the Contract, are as follows:

Addendum No. 1, dated _____

Addendum No. 2, dated _____

Addendum No. 3, dated _____

Rider No. [___], dated None

7.1.7 Other documents:

	Document No.	Title
[X]	00410B	Proposal Form – Part B
[ ]	00470	Standard Pre-Bid Participation Plan Document
[ ]	00471	Pre-Bid Good Faith Efforts Report
[ ]	00472	Goal Deviation Request
[X]	00501	Resolution of Contractor
[ ]	00570	Amended S/MWBE Participation Plan
[ ]	00571	Contractor's Good Faith Efforts Report
[ ]	00572	Plan Deviation Request
[X]	00610	Performance Bond
[X]	00611	Statutory Payment Bond
[X]	00612-T	One-year Warranty Work Bond
[X]	00620	Affidavit of Insurance (with the Certificate of Insurance attached)
[ ]	00623	Contractor's Act of Assurance (SRF Form ED-103)
[X]	00624	Affidavit of Compliance with Affirmative Action Program
[ ]	00630	(POP-2) Certification of Compliance with Pay or Play Program
[ ]	00631	(POP-3) Pay or Play Program List of Subcontractors
[ ]	00803	Work Order Supplementary Conditions
[ ]	00802	SRF Supplementary Conditions
[ ]	00805	Equal Employment Opportunity Program Requirements
[X]	00806-T	TxDOT Disadvantaged Business Enterprise (DBE) Program Requirements
[ ]	00807	Bidder/Contractor Requirements for DBE Program
[ ]	00808	Minority and Women-owned Business Enterprise (MWBE) & Persons with Disabilities Business Enterprise (PDBE) Program
[X]	00810	Federal Wage Rate - Highway
[ ]	00811	Federal Wage Rate - Building
[X]	00812	Federal Wage Rate – Heavy
[X]	00820	Wage Rate for Engineering Construction
[ ]	00830	Trench Safety Geotechnical Information
[X]	00851	Buy America Requirements
[X]	00852	Changed Conditions
[ ]	00840	Pay or Play Program Requirements
[ ]	00912	Rider
[X]	FHWA1273	Required Contract Provisions for Federal-Aid Construction Contracts
[X]	SPE 000---003	Notice to All Bidders
[X]	SPE 000---004	Notice of Requirement for Affirmative Action to Ensure Equal Employment Opportunity
[X]	SPE 000---006	Standard Federal EEO Construction Contract Specifications
[X]	SPE 000---009	Certificate of Non-Discrimination
[X]	SPE 000---011	Department Division Mailing and Physical Addresses

[X] SPE 000---1483 Changes to Payroll Information
[X] SPE 000---2638 On the Job Training Program
[X] SPE 000---2329 Partnering
[X] SPE 000---2607 Nondiscrimination
[X] SPE 000---1966 Disadvantaged Business Enterprise in Federal Aid Contracts
[X] SPE 440---006 Reinforcing Steel

ARTICLE 8
SIGNATURES

8.1 This Agreement is executed in two original copies and is effective as of the date of countersignature by City Controller.

CONTRACTOR:

By: _____

Name: _____

Title: _____

Date: _____

Tax Identification Number: _____

(If Joint Venture)

By: _____

Name: _____

Title: _____

Date: _____

Tax Identification Number: _____

CITY OF HOUSTON, TEXAS

APPROVED:

By: _____
Director,
Department of Public Works and Engineering

SIGNED:

By: _____
Mayor

COUNTERSIGNED:

By: _____
City Controller

Date Countersigned:

_____

_____

ATTEST/SEAL:

By: _____
City Secretary

8.2 This Contract and Ordinance have been reviewed as to form by the undersigned legal assistant and have been found to meet established Legal Department criteria. Legal Department has not reviewed the content of these documents.

_____
Legal Assistant

_____
Date

END OF DOCUMENT

Document 00600-T

LIST OF PROPOSED SUBCONTRACTORS AND SUPPLIERS - PART A[1]
DBE PARTICIPATION PLAN

PROJECT NAME: *MKT Trail Spur Connector*
ORIG. CONTRACT PRICE: $_____
PROJECT NO.: N-320420-030A-4 / CSJ 0912-72-299
PART. AMOUNT: $_____
DATE OF REPORT: _____ PERCENTAGE: _____%
PERCENTAGE DBE: _____%

SUBCONTRACTOR OR SUPPLIER[2] (INLCUDE MBE/WBE/PDBE/DBE/SBE DESIGNATION)	ADDRESS	SCOPE OF WORK[3]	AGREED PRICE

NOTES:
1. RETURN PART A FOR PROJECTS WITH A STATED MWBE, PDBE, DBE AND/OR SBE PERCENTAGE GOAL, AS REQUIRED IN DOCUMENT 00800 – SUPPLEMENTARY CONDITIONS. RETURN PART A WITHIN THE SPECIFIED NUMBER OF DAYS AFTER RECEIPT OF NOTICE OF INTENT TO AWARD
2. FIRMS LISTED IN PART A SHALL BE CERTIFIED BY THE CITY AFFIRMATIVE ACTION/ CONTRACT COMPLIANCE DIVISION.
3. DESCRIBE THE WORK TO BE PERFORMED, FOR WHICH THE FIRM IS CERTIFIED, SUCH AS PAVING, ELECTRICAL, ETC.

CONTRACTOR SHALL EXECUTE CONTRACTS WITH APPROVED SUBCONTRACTORS AND SUPPLIERS WITHIN 30 DAYS AFTER THE DATE OF THE NOTICE TO PROCEED.

SIGNATURE: _____ COMPANY NAME: _____

NAME: _____ TITLE: _____
(Type or Print)

END OF DOCUMENT

Document 00600-T

LIST OF PROPOSED SUBCONTRACTORS AND SUPPLIERS - PART B[1]
SCHEDULE OF NON- DBE SUBCONTRACTORS AND SUPPLIERS

PROJECT NAME: *MKT Trail Spur Connector*
DATE OF REPORT: _____
PROJECT NO.: N-320420-030A-4 / CSJ 0912-72-299

SUBCONTRACTOR OR SUPPLIER	ADDRESS	SCOPE OF WORK[2]

NOTES:
1. RETURN PART B FOR ALL PROJECTS WITHIN THE SPECIFIED NUMBER OF DAYS AFTER RECEIPT OF NOTICE OF INTENT TO AWARD.
2. DESCRIBE THE WORK TO BE PERFORMED, SUCH AS PAVING, ELECTRICAL, ETC.

CONTRACTOR SHALL EXECUTE CONTRACTS WITH APPROVED SUBCONTRACTORS AND SUPPLIERS WITHIN 30 DAYS AFTER THE DATE OF THE NOTICE TO PROCEED.

SIGNATURE: _____ COMPANY NAME: _____

NAME: _____ TITLE: _____
(Type or Print)

END OF DOCUMENT

Document 00601

DRUG POLICY COMPLIANCE AGREEMENT

I, _____ _____
Name Title

of _____
Contractor

have authority to bind Contractor with respect to its Bid, Proposal, or performance of any and all contracts it may enter into with the City of Houston; and that by making this Agreement, I affirm that Contractor is aware of and by the time the Contract is awarded will be bound by and agree to designate appropriate safety impact positions for company employee positions, and to comply with the following requirements before the City issues a Notice to Proceed:

1. Develop and implement a written Drug Free Workplace Policy and related drug testing procedures for Contractor that meet the criteria and requirements established by the Mayor's Amended Policy on Drug Detection and Deterrence (Mayor's Drug Policy) and the Mayor's Drug Detection and Deterrence Procedures for Contractors (Executive Order No. 1-31).

2. Obtain a facility to collect urine samples consistent with Health and Human Services (HHS) guidelines and an HHS-certified drug-testing laboratory to perform drug tests.

3. Monitor and keep records of drug tests given and results; and upon request from the City of Houston, provide confirmation of such testing and results.

4. Submit semi-annual Drug Policy Compliance Declarations.

I affirm on behalf of Contractor that full compliance with the Mayor's Drug Policy and Executive Order No. 1-31 is a material condition of the Contract with the City of Houston,

I further acknowledge that falsification, failure to comply with or failure to timely submit declarations or documentation in compliance with the Mayor's Drug Policy or Executive Order No. 1-31 will be considered a breach of the Contract with the City and may result in non-award or termination of the Contract by the City.

_____ _____
Contractor Title

_____ _____
Signature Date

END OF DOCUMENT

Document 00603

CHECKLIST FOR DRUG POLICY SUBMITTAL

TO: **CARLOS MARTINEZ**
PWE/DIRECTOR'S OFFICE
SECURITY MANAGEMENT SECTION
611 WALKER STREET
3RD FLOOR ANNEX
HOUSTON, TEXAS 77002

FROM: **ASSISTANT DIRECTOR**
ENGINEERING AND CONSTRUCTION
PUBLIC WORKS

DATE: _____

CONTRACTOR: _____

PROJECT NAME: Missouri Kansas Texas Trail Spur Connector

PROJECT No.: WBS No.N-320420-030A-4 TCSP 2015 (443)

PROJECT MANAGER: HoJin Lim, PE, **TELEPHONE:** 281-589-7257 **FAX:** 281-589-7309

DOCUMENTS CHECKED BELOW ARE BEING SUBMITTED: (Project Manager, check.)

- ☐ **DOC. 00601 - DRUG POLICY COMPLIANCE AGREEMENT (Standard Form)**
- ☐ **DOC. 00602 - CONTRACTOR'S DRUG-FREE WORKPLACE POLICY (Contractor creates this Document)**
- ☐ **DOC. 00605 - LIST OF SAFETY IMPACT POSITIONS (Contractor creates this List) "OR"**
- ☐ **DOC. 00606 - CONTRACTOR'S CERTIFICATION OF NO SAFETY IMPACT POSITIONS**

CCODT REVIEW: THE FOLLOWING CHECKED ITEM(S) ARE MISSING FROM SUBMISSION/POLICY AND NEED TO BE CORRECTED PRIOR TO AWARD:

- ☐ **NAME OF DRUG TESTING LAB**
  REASON FOR TESTING:
  - ☐ **RANDOM TESTING - 25% ANNUALLY**
  - ☐ **REASONABLE SUSPICION**
  - ☐ **POST ACCIDENT**
- ☐ **SAFETY IMPACT POSITIONS INCOMPLETE**
- ☐ **EMPLOYEE ACKNOWLEDGMENT FORM**
- ☐ **DRUG TESTING PROCEDURES**
- ☐ **CONSEQUENCE OF POSITIVE TEST:** *PERMANENTLY REMOVED FROM ANY CONTRACT CITY WORKSITE.*
- ☐ **CONSEQUENCE OF REFUSAL TO CONSENT:** *PERMANENTLY REMOVED FROM ANY CONTRACT CITY WORKSITE.*
- ☐ **OTHER:** _____

REJECTED	_____
	_____
	_____
APPROVED	_____

COMMENTS: _____

DATE RECEIVED: _____ **RESUBMITTAL DATE:** _____

END OF DOCUMENT

Document 00604

HISTORY OF OSHA ACTIONS AND LIST OF ON-THE-JOB INJURIES

Prior to award of the Contract, Low Bidder will be required to file the following with the City:

1. A history of all OSHA actions, advisories, etc., Contractor has received on all jobs worked in any capacity, prime or subcontractor. The history shall be for the two-year period preceding the Bid Date of the Project.

2. A list of all on-the-job injuries, accidents, and fatalities suffered by any present or former employees of Contractor during the same two-year period.

3. If less than the two-year period, give the date Contractor started doing business.

This information must be submitted to the City within the time period stated in Document 00498 - Notice of Intent to Award. An officer of the company must certify in a notarized statement that the information submitted is true and correct.

END OF DOCUMENT

Document 00605

LIST OF SAFETY IMPACT POSITIONS

Employee Classification	Number of Employees

END OF DOCUMENT

Document 00606

CONTRACTOR'S CERTIFICATION OF
NO SAFETY IMPACT POSITIONS IN PERFORMANCE OF A CITY CONTRACT

BEFORE ME, the undersigned authority, on this day personally appeared

_____,
Affiant

who being by me duly sworn on his oath stated that he is _____
Title

of _____
Contractor

and that no employee safety impact positions, as defined in §5.17 of Executive Order No. 1-31, will be involved in performing _____.
Project

Contractor agrees and covenants that it shall immediately notify the City of Houston Director of Personnel if any safety impact positions are established to provide services in performing this City Contract.

_____
Affiant's Signature

SWORN AND SUBSCRIBED before me on this day of _____, 20___.

_____
Notary Public in and for the State of TEXAS

_____
Print or Type Notary Public Name

My Commission Expires: _____
Expiration Date

END OF DOCUMENT

Document 00607

CERTIFICATION REGARDING DEBARMENT, SUSPENSION, AND OTHER RESPONSIBILITY MATTERS

Contractor certifies to the best of its knowledge and belief that it and its principals:

1. Are not presently debarred, suspended, proposed for debarment, declared ineligible, or voluntarily excluded from covered transactions by any Federal, State, or local department or agency;

2. Have not within a three-year period preceding this proposal been convicted of or had a civil judgment rendered against them for commission of fraud or a criminal offense in connection with obtaining, attempting to obtain, or performing a public (Federal, State, or local) transaction or contract under a public transaction: violation of Federal or State antitrust statutes or commission of embezzlement, theft, forgery, bribery, falsification or destruction of records, making false statements, or receiving stolen property;

3. Are not presently indicted for or otherwise criminally or civilly charged by a government entity (Federal, State, or local) with commission of any of the offenses enumerated in paragraph 2 of this certification; and

4. Have not within a three-year period preceding this application/proposal had one or more public transactions (Federal, State, or local) terminated for cause or default.

I understand that a false statement on this certification may be grounds for rejection of this proposal or termination of the award. In addition, under 18 USC Section 1001, a false statement may result in a fine of up to $10,000 or imprisonment for up to five years, or both.

Company:

_____
Typed Name & Title of Authorized Representative

_____
Signature of Authorized Representative

_____
Date

☐ I am unable to certify the above statements. My explanation is attached.

END OF DOCUMENT

Document 00610

PERFORMANCE BOND

THAT WE, _____, as Principal, (the "Contractor"), and the other subscriber hereto, _____, as Surety, do hereby acknowledge ourselves to be held and firmly bound to the City of Houston (the "City"), a municipal corporation, in the penal sum of $_____ for the payment of which sum, well and truly to be made to the City, its successors and assigns, Contractor and Surety do bind themselves, their heirs, executors, administrators, successors and assigns, jointly and severally.

THE CONDITIONS OF THIS OBLIGATION ARE SUCH THAT:

WHEREAS, the Contractor has on or about this day executed a Contract in writing with the City for _____
_____,
all of such work to be done as set out in full in said Contract documents therein referred to and adopted by the City Council, all of which are made a part of this instrument as fully and completely as if set out in full herein.

NOW THEREFORE, if the said Contractor shall faithfully and strictly perform the Contract in all its terms, provisions, and stipulations in accordance with its true meaning and effect, and in accordance with the Contract documents referred to therein and shall comply strictly with each and every provision of the Contract and with this Bond, then this obligation shall become null and void and shall have no further force and effect; otherwise the same is to remain in full force and effect. Should the Contractor fail to faithfully and strictly perform the Contract in all its terms, including but not limited to the indemnifications thereunder, the Surety shall be liable for all damages, losses, expenses and liabilities that the City may suffer in consequence thereof, as more fully set forth herein.

It is further understood and agreed that the Surety does hereby relieve the City or its representatives from the exercise of any diligence whatever in securing compliance on the part of the Contractor with the terms of the Contract, and the Surety agrees that it shall be bound to take notice of and shall be held to have knowledge of all acts or omissions of the Contractor in all matters pertaining to the Contract. The Surety understands and agrees that the provision in the Contract that the City will retain certain amounts due the Contractor until the expiration of 30 days from the acceptance of the Work is intended for the City's benefit, and the City will have the right to pay or withhold such retained amounts or any other amount owing under the Contract without changing or affecting the liability of the Surety hereon in any degree.

It is further expressly agreed by Surety that the City or its representatives are at liberty at any time, without notice to the Surety, to make any change in the Contract documents and in the Work to be done thereunder, as provided in the Contract, and in the terms and conditions thereof, or to make any change in, addition to, or deduction from the Work to be done thereunder; and that such changes, if made, shall not in any way vitiate the obligation in this Bond and undertaking or release the Surety therefrom.

It is further expressly agreed and understood that the Contractor and Surety will fully indemnify and save harmless the City from any liability, loss, cost, expense, or damage arising out of Contractor's performance of the Contract.

If the City gives Surety notice of Contractor's default, Surety shall, within 45 days, take one of the following actions:

1. Arrange for Contractor, with consent of the City, to perform and complete the Contract; or

2. Take over and assume completion of the Contract itself, through its agents or through independent contractors, and become entitled to the payment of the balance of the Contract Price.

If the Surety fails to take either of the actions set out above, it shall be deemed to have waived its right to perform and complete the Contract and receive payment of the balance of the Contract Price and the City shall be entitled to enforce any remedies available at law, including but not limited to completing the Contract itself and recovering any cost in excess of the Original Contract Price from the Surety.

This Bond and all obligations created hereunder shall be performable in Harris County, Texas. This Bond is given in compliance with the provisions of Chapter 2253, Texas Government Code, as amended, which is incorporated herein by this reference.

Notices required or permitted hereunder shall be in writing and shall be deemed delivered when actually received or, if earlier, on the third day following deposit in a United States Postal Service post office or receptacle, with proper postage affixed (certified mail, return receipt requested), addressed to the respective other Party at the address prescribed in the Contract documents, or at such other address as the receiving party may hereafter prescribe by written notice to the sending party.

IN WITNESS THEREOF, the said Contractor and Surety have signed and sealed this instrument on the respective dates written below their signatures and have attached current Power of Attorney.

ATTEST, SEAL: (if a corporation)
WITNESS: (if not a corporation)

_____
Name of Contractor

By: _____
Name:
Title:

By: _____
Name:
Title:
Date:

ATTEST/SURETY WITNESS:

(SEAL)

_____
Full Name of Surety

_____
Address of Surety for Notice

_____

_____
Telephone Number of Surety

By: _____
Name:
Title:
Date:

By: _____
Name:
Title: Attorney-in-Fact
Date:

This Ordinance or Contract has been reviewed as to form by the undersigned legal assistant and have been found to meet established Legal Department criteria. The Legal Department has not reviewed the content of these documents.

_____
Legal Assistant

_____
Date

END OF DOCUMENT

Document 00611

STATUTORY PAYMENT BOND

THAT WE, _____, as Principal, hereinafter called Contractor and the other subscriber hereto, _____, as Surety, do hereby acknowledge ourselves to be held and firmly bound unto the City of Houston, a municipal corporation, in the sum of $_____ for the payment of which sum, well and truly to be made to the City of Houston, and its successors, the said Contractor and Surety do bind themselves, their heirs, executors, administrators, successors, jointly and severally.

THE CONDITIONS OF THIS OBLIGATION ARE SUCH THAT:

WHEREAS, the Contractor has on or about this day executed a contract in writing with the City of Houston for _____
_____, all of such work to be done as set out in full in said Contract documents therein referred to and adopted by the City Council, all of which are made a part of this instrument as fully and completely as if set out in full herein;

NOW, THEREFORE, if the said Contractor shall pay all claimants supplying labor and materials to him or a Subcontractor in the prosecution of the Work provided for in the Contract, then, this obligation shall be void; otherwise the same is to remain in full force and effect;

PROVIDED HOWEVER, that this Bond is executed pursuant to the provisions of Chapter 2253, Texas Government Code, as amended, and all liabilities on this Bond shall be determined in accordance with the provisions of said Article to the same extent as if it were copied at length herein.

IN WITNESS THEREOF, the said Contractor and Surety have signed and sealed this instrument on the respective dates written below their signatures and have attached current Power of Attorney.

ATTEST, SEAL: (if a corporation)
WITNESS: (if not a corporation)

_____
Name of Contractor

By: _____
Name:
Title:

By: _____
Name:
Title:
Date:

ATTEST/SURETY WITNESS:

(SEAL)

_____
Full Name of Surety

_____
Address of Surety for Notice

_____

_____
Telephone Number of Surety

By: _____
Name:
Title:
Date:

By: _____
Name:
Title: Attorney-in-Fact
Date:

This Ordinance or Contract has been reviewed as to form by the undersigned legal assistant and have been found to meet established Legal Department criteria. The Legal Department has not reviewed the content of these documents.

_____
Legal Assistant

_____
Date

END OF DOCUMENT

Document 00612-T

ONE-YEAR WARRANTY OF WORK BOND

THAT WE, _____, as Principal, hereinafter called Contractor, and the other subscriber hereto, _____, as Surety, do hereby acknowledge ourselves to be held and firmly bound to the City of Houston, a municipal corporation, in the sum of $_____, for the payment of which sum well and truly to be made to the City of Houston and its successors, the said Contractor and Surety do bind themselves, their heirs, executors, administrators, successors, jointly and severally.

THE CONDITIONS OF THIS OBLIGATION ARE SUCH THAT:

WHEREAS, the Contractor has on or about this day executed a Contract in writing with the City of Houston for _____ _____, all of such work to be done as set out in full in said Contract documents therein referred to and adopted by the City Council, all of which are made a part of this instrument as fully and completely as if set out in full herein.

NOW THEREFORE, if the said Contractor shall comply with the provisions of Paragraph 11.5.1 of the General Conditions, and correct work not in accordance with the Contract documents discovered within the established one-year period, then this obligation shall become null and void, and shall be of no further force and effect; otherwise, the same is to remain in full force and effect.

Notices required or permitted hereunder shall be in writing and shall be deemed delivered when actually received or, if earlier, on the third day following deposit in a United States Postal Service post office or receptacle, with proper postage affixed (certified mail, return receipt requested), addressed to the respective other party at the address prescribed in the Contract documents, or at such other address as the receiving party may hereafter prescribe by written notice to the sending party.

IN WITNESS THEREOF, the said Contractor and Surety have signed and sealed this instrument on the respective dates written below their signatures and have attached current Power of Attorney.

ATTEST, SEAL: (if a corporation)
WITNESS: (if not a corporation)

_____
Name of Contractor

By: _____
Name:
Title:

By: _____
Name:
Title:
Date:

ATTEST/SURETY WITNESS:

(SEAL)

_____
Full Name of Surety

_____
Address of Surety for Notice

_____

_____
Telephone Number of Surety

By: _____
Name:
Title:
Date:

By: _____
Name:
Title: Attorney-in-Fact
Date:

This Ordinance or Contract has been reviewed as to form by the undersigned legal assistant and have been found to meet established Legal Department criteria. The Legal Department has not reviewed the content of these documents.

_____
Legal Assistant

_____
Date

END OF DOCUMENT

Document 00620

AFFIDAVIT OF INSURANCE

BEFORE ME, the undersigned authority, on this day personally appeared

_____, who
Affiant

being by me duly sworn on his oath stated that he is _____, of
Title

_____,
Contractor's Company Name

the Contractor named and referred to within the Contract documents; that he is fully competent and authorized to give this affidavit and that the attached original insurance certificate truly and accurately reflects the insurance coverage that is now available and will be available during the term of the Contract.

_____
Affiant's Signature

SWORN AND SUBSCRIBED before me on _____.
Date

_____
Notary Public in and for the State of TEXAS

_____
Print or type Notary Public name

My Commission Expires: _____
Expiration Date

END OF DOCUMENT

Document 00624

AFFIDAVIT OF COMPLIANCE WITH
AFFIRMATIVE ACTION PROGRAM

BEFORE ME, the undersigned authority, on this day personally appeared

_____, who
Affiant

being by me duly sworn on his oath stated that he is _____,
Title

of _____,
Contractor

the Contractor named and referred to within the Contract documents; that he is fully competent and authorized to give this affidavit and that the Contract is in compliance with the Affirmative Action Program of the City and has done all that is required by the Contract documents, the Affirmative Action Program, and pursuant to Chapter 15, Code of Ordinances, City of Houston, §15.16 et seq.

_____
Affiant's Signature

SWORN AND SUBSCRIBED before me on this day of _____, 20___.

_____
Notary Public in and for the State of TEXAS

_____
Print or Type Notary Public Name

My Commission Expires: _____
Expiration Date

END OF DOCUMENT

Document 00633

CERTIFICATION BY PROPOSED MATERIAL SUPPLIERS,
LESSORS, AND PROFESSIONAL SERVICE PROVIDERS
REGARDING EQUAL EMPLOYMENT OPPORTUNITY

Company Name: _____ $_____
(Supplier, Lessor, Professional Service Provider) (Amount of Contract)

Company Address: _____

Company Telephone Number:_____ Fax:_____

E-mail Address: _____

Web Page/URL Address:_____

Company Tax Identification Number: _____

Project No.: [*WBS/CIP/AIP/File No.*]_____

Project Name: [*Legal Project Name*]_____

In accordance with the City of Houston Ordinance 78-1538, Supplier/Lessor/Professional Service Provider represents to be an equal opportunity employer and agrees to abide by the terms of the Ordinance. This certification is required of all Suppliers/Lessors/Professional Service Providers (herein Supplier) with contracts in the amount of $10,000.00 or more.

[ ] Yes [ ] No Supplier agrees not to discriminate against any employee or applicant for employment because of race, religion, color, sex, national origin, or age.

[ ] Yes [ ] No Supplier agrees that all qualified applicants will receive consideration for employment without regard to race, religion, color, sex, national origin, or age.

[ ] Yes [ ] No Supplier will comply with all provisions of Executive Order No. 11246 and rules, regulations and applicable orders of the Department of Labor or other Federal Agency responsible for enforcement of applicable equal opportunity and affirmative action provisions and will likewise furnish all information and reports required by the Mayor or Contract Compliance Officers for the purpose of investigation to ascertain and effect compliance with the City of Houston's Office of Affirmative Action and Contract Compliance.

[ ] Yes [ ] No The Supplier shall file and cause their sub-tier contractors to file compliance reports with the City in the form and to the extent as may be prescribed by the Mayor or Contract Compliance Officers. Compliance reports filed at such times as directed shall contain information including, but not limited to, the practices, policies, programs, and employment policies.

I hereby certify that the above information is true and correct.

_____ _____
COMPANY OFFICER (Signature) DATE

_____
NAME AND TITLE (Print or type)

END OF DOCUMENT

Document 00633

CERTIFICATION BY PROPOSED MATERIAL SUPPLIERS,
LESSORS, AND PROFESSIONAL SERVICE PROVIDERS
REGARDING EQUAL EMPLOYMENT OPPORTUNITY

Company Name: _____ $_____
(Supplier, Lessor, Professional Service Provider) (Amount of Contract)

Company Address: _____

Company Telephone Number: _____ Fax: _____

E-mail Address: _____

Web Page/URL Address: _____

Company Tax Identification Number: _____

Project No.: *WBS No. N-320420*-030A-4

Project Name: Missouri Kansas Texas Trail Spur Connector

In accordance with the City of Houston Ordinance 78-1538, Supplier/Lessor/Professional Service Provider represents to be an equal opportunity employer and agrees to abide by the terms of the Ordinance. This certification is required of all Suppliers/Lessors/Professional Service Providers (herein Supplier) with contracts in the amount of $10,000.00 or more.

[ ] Yes [ ] No Supplier agrees not to discriminate against any employee or applicant for employment because of race, religion, color, sex, national origin, or age.

[ ] Yes [ ] No Supplier agrees that all qualified applicants will receive consideration for employment without regard to race, religion, color, sex, national origin, or age.

[ ] Yes [ ] No Supplier will comply with all provisions of Executive Order No. 11246 and rules, regulations and applicable orders of the Department of Labor or other Federal Agency responsible for enforcement of applicable equal opportunity and affirmative action provisions and will likewise furnish all information and reports required by the Mayor or Contract Compliance Officers for the purpose of investigation to ascertain and effect compliance with the City of Houston's Office of Affirmative Action and Contract Compliance.

[ ] Yes [ ] No The Supplier shall file and cause their sub-tier contractors to file compliance reports with the City in the form and to the extent as may be prescribed by the Mayor or Contract Compliance Officers. Compliance reports filed at such times as directed shall contain information including, but not limited to, the practices, policies, programs, and employment policies.

I hereby certify that the above information is true and correct.

_____ _____
COMPANY OFFICER (Signature) DATE

_____
NAME AND TITLE (Print or type)

END OF DOCUMENT

Document 00642

CERTIFICATION OF PAYMENT TO SUBCONTRACTORS AND SUPPLIERS

The undersigned, _____, states that he is the _____,
Affiant Title
of _____
Contractor
and that he is duly authorized to execute this Certification of Payment to Subcontractors and Suppliers; that Contractor has made payments to Subcontractors and Suppliers for all labor, materials, equipment, and services furnished to date for Work on Project No. _____ in the amounts for which Contractor has been paid; that the labor, materials, equipment, and services covered by this Certificate of Payment have been furnished in accordance with and all in compliance with the Contract Documents; that no sums have been withheld by Contractor for Subcontractors and Suppliers as a result of any allegations of deficiencies in the Work; and that such payments were made in accordance with the Contract Documents and with the laws of the State of Texas.

_____
Affiant's Signature

SWORN AND SUBSCRIBED before me on _____.
Date

_____
Notary Public in and for the State of TEXAS

_____
Print or type name

My Commission Expires: _____
Expiration Date

END OF DOCUMENT

PAYMENT NOTIFICATION
EXPLANATION OF WITHHOLDING

****

Instructions:

If Contractor withholds any amount of a payment to a Subcontractor for any reason, the Contractor shall send Payment Notifications to the Subcontractor explaining why the payment was withheld.

Contractor shall provide the City Monitoring Authority with Payment Notifications for each subcontractor from which Contractor has withheld payment. Contractor shall submit all necessary Payment Notifications (Document 00646), Payment Reporting Forms (Document 00642), and other documentation at the same time Contractor submits the Application and Certification for Payment or the Estimate for Payment.

****

Document 00646

PAYMENT NOTIFICATION – EXPLANATION OF WITHHOLDING

Legal Project Name: _____

Outline Agreement No.: _____ WBS No.: _____

Contractor's Company Name: _____

Address: _____

Date: _____

SUBCONTRACTOR PAYMENT INFORMATION:

Subcontractor Name: _____

Street Address: _____

City, State, and Zip Code: _____

Business Phone Number: _____

Amount of Subcontractor Invoice: _____

Amount of Payment Made: _____

Amount of Payment Withheld: _____

Date Payment First Withheld: _____

DETAILED EXPLANATION OF WITHHOLDING: _____

_____

_____

_____

_____

_____ (Signature of Contractor's Representative)

_____ (Print or Type Name of Contractor's Representative)

Document 00700

GENERAL CONDITIONS

August 15, 2015 EDITION

TABLE OF ARTICLES

1. GENERAL PROVISIONS
2. THE CITY
3. CONTRACTOR
4. ADMINISTRATION OF THE CONTRACT
5. SUBCONTRACTORS AND SUPPLIERS
6. CONSTRUCTION BY THE CITY OR BY SEPARATE CONTRACTORS
7. CHANGES IN THE WORK
8. TIME
9. PAYMENTS AND COMPLETION
10. SAFETY PRECAUTIONS
11. INSURANCE AND BONDS
12. UNCOVERING AND CORRECTION OF THE WORK
13. MISCELLANEOUS PROVISIONS
14. TERMINATION OR SUSPENSION OF THE CONTRACT

ARTICLE 1 - GENERAL PROVISIONS 3

1.1 DEFINITIONS 3
1.2 EXECUTION, CORRELATION, AND INTENT 5
1.3 OWNERSHIP AND USE OF DOCUMENTS 6
1.4 INTERPRETATION 6

ARTICLE 2 - THE CITY 6

2.1 LIMITATIONS OF THE CITY'S OFFICERS AND EMPLOYEES 6
2.2 DUTIES OF THE CITY 6
2.3 AVAILABILITY OF LAND AND USE OF SITE 6
2.4 THE CITY'S RIGHT TO STOP THE WORK 7
2.5 THE CITY'S RIGHT TO CARRY OUT WORK 7

ARTICLE 3 - CONTRACTOR 7

3.1 RESPONSIBILITIES 7
3.2 REVIEW OF CONTRACT AND FIELD CONDITIONS BY CONTRACTOR 7
3.3 SUPERVISION AND CONSTRUCTION PROCEDURES 7
3.4 SUPERINTENDENT 8
3.5 LABOR 8
3.6 PREVAILING WAGE RATES 9
3.7 LABOR CONDITIONS 9
3.8 DRUG DETECTION AND DETERRENCE 9
3.9 MATERIALS & EQUIPMENT 10
3.10 PRODUCT OPTIONS AND SUBSTITUTIONS 10
3.11 CASH ALLOWANCES 11
3.12 WARRANTY 11
3.13 TAXES 12
3.14 PERMITS, FEES, AND NOTICES 12
3.15 CONSTRUCTION SCHEDULES 12
3.16 DOCUMENTS AND SAMPLES AT THE SITE 12
3.17 MANUFACTURER'S SPECIFICATIONS 12
3.18 SHOP DRAWINGS, PRODUCT DATA, AND SAMPLES 13
3.19 CULTURAL RESOURCES AND ENDANGERED SPECIES 13
3.20 CUTTING AND PATCHING 14
3.21 CLEANING 14
3.22 SANITATION 14
3.23 ACCESS TO WORK AND TO INFORMATION 14
3.24 TRADE SECRETS 14
3.25 INDEMNIFICATION 14
3.26 RELEASE AND INDEMNIFICATION – PATENT, COPYRIGHT, TRADEMARK, AND TRADE SECRET INFRINGEMENT 15
3.27 INDEMNIFICATION PROCEDURES 15
3.28 CONTRACTOR DEBT 156

ARTICLE 4 - ADMINISTRATION OF THE CONTRACT 16

4.1 CONTRACT ADMINISTRATION 16
4.2 COMMUNICATIONS IN ADMINISTRATION OF THE CONTRACT 17
4.3 CLAIMS AND DISPUTES 17
4.4 RESOLUTION OF CLAIMS AND DISPUTES 18
4.5 CONDITION PRECEDENT TO SUIT; WAIVER OF ATTORNEYFEES AND INTEREST 18
4.6 INTERIM PAYMENT WAIVER & RELEASE 18

ARTICLE 5 - SUBCONTRACTORS AND SUPPLIERS 19

5.1 AWARD OF SUBCONTRACTS OTHER CONTRACTS FOR PORTIONS OF THE WORK 19
5.2 CONTRACTOR RESPONSIBILITY FOR SUBCONTRACTORS 19

ARTICLE 6 - CONSTRUCTION BY THE CITY OR BY SEPARATE CONTRACTORS 19

6.1 THE CITY'S RIGHT TO PERFORM CONSTRUCTION AND TO AWARD SEPARATE CONTRACTS 19
6.2 COORDINATION 19
6.3 MUTUAL RESPONSIBILITY 20
6.4 THE CITY'S RIGHT TO CLEAN UP 20

ARTICLE 7 - CHANGES IN THE WORK 20

7.1 CHANGES 20
7.2 WORK CHANGE DIRECTIVES 20
7.3 ADJUSTMENTS IN CONTRACT PRICE 21
7.4 MINOR CHANGES IN THE WORK 22

ARTICLE 8 - TIME 22

8.1 PROGRESS AND COMPLETION 22
8.2 DELAYS AND EXTENSIONS OF TIME 22

ARTICLE 9 - PAYMENTS AND COMPLETION 23

9.1 UNIT PRICE WORK 23
9.2 ESTIMATES FOR PAYMENT, UNIT PRICE WORK 23
9.3 STIPULATED PRICE WORK 24
9.4 APPLICATIONS FOR PAYMENT, STIPULATED PRICE WORK 24
9.5 CERTIFICATES FOR PAYMENT 24
9.6 COMPUTATIONS OF CERTIFICATES FOR PAYMENT 24
9.7 DECISIONS TO WITHHOLD CERTIFICATION 24
9.8 PROGRESS PAYMENTS 25
9.9 DATE OF SUBSTANTIAL COMPLETION 25
9.10 PARTIAL OCCUPANCY OR USE 26
9.11 FINAL COMPLETION AND FINAL PAYMENT 26

9.12 LIQUIDATED DAMAGES 27

ARTICLE 10 - SAFETY PRECAUTIONS 27

10.1 SAFETY PROGRAMS 27
10.2 POLLUTANTS AND POLLUTANT FACILITIES 28
10.3 SAFETY OF THE ENVIRONMENT, PERSONS, AND PROPERTY 28
10.4 EMERGENCIES 28

ARTICLE 11 - INSURANCE AND BONDS 28

11.1 GENERAL INSURANCE REQUIREMENTS 28
11.2 INSURANCE TO BE PROVIDED BY CONTRACTOR 29
11.3 PROOF OF INSURANCE 32
11.4 PERFORMANCE AND PAYMENT BONDS 33
11.5 MAINTENANCE BONDS 33
11.6 SURETY 33
11.7 DELIVERY OF BONDS 344

ARTICLE 12 - UNCOVERING AND CORRECTION OF THE WORK 344

12.1 UNCOVERING OF THE WORK 34
12.2 CORRECTION OF THE WORK 34
12.3 ACCEPTANCE OF NONCONFORMING WORK 34

ARTICLE 13 - MISCELLANEOUS PROVISIONS 34

13.1 GOVERNING LAWS 34
13.2 SUCCESSORS 345
13.3 BUSINESS STRUCTURE AND ASSIGNMENTS . 355
13.4 WRITTEN NOTICE 35
13.5 RIGHTS AND REMEDIES 35
13.6 TESTS AND INSPECTIONS 35
13.7 INTEREST 35
13.8 PARTIES IN INTEREST 36
13.9 ENTIRE CONTRACT 36
13.10 WRITTEN AMENDMENT 36
13.11 COMPLIANCE WITH LAWS 36
13.12 SEVERABILITY 36

ARTICLE 14 - TERMINATION OR SUSPENSION OF THE CONTRACT 36

14.1 TERMINATION BY THE CITY FOR CAUSE 36
14.2 TERMINATION BY THE CITY FOR CONVENIENCE 37
14.3 SUSPENSION BY THE CITY FOR CONVENIENCE 37
14.4 TERMINATION BY CONTRACTOR 38

ARTICLE 1 - GENERAL PROVISIONS

1.1 DEFINITIONS

1.1.1 Agreement: Document signed by the Parties and binding the Parties, containing the name of Contractor, title and location of the Project, Original Contract Time, Original Contract Price, enumeration of documents included in the Contract, and other provisions.

1.1.2 Bonds: Performance Bond, Payment Bond, Maintenance Bond, and other Surety instruments executed by Surety. When in singular form, refers to individual instrument.

1.1.3 Business Enterprise: Any business entity registered in a program authorized by 49 C.F.R. § 26 (where applicable) or City Code of Ordinances, Chapter 15, Article II, relating to Equal Opportunity Employment and taking affirmative action to ensure that applicants are employed and employees are treated without regard to race, religion, color, sex, national origin, or age. The term "Business Enterprise" may include any Disadvantaged Business Enterprise ("DBE"), Minority Business Enterprise ("MBE"), Woman Business Enterprise ("WBE"), Small Business Enterprise ("SBE"), Person with Disability Enterprise ("PDBE"), and any Historically Underutilized Business ("HUB").

1.1.4 Business Enterprise Policy: Contract documents and applicable policies relating to Business Enterprises and authorized under 49 C.F.R. § 26 or City Code of Ordinances, Chapter 15, Article II.

1.1.5 Cash Allowance: An estimated sum of money to be used only for a limited class of expenditures such as utility relocation costs, fees for special licenses or permits, or other "pass-through" costs that would be the same for any contractor. Cash Allowances may not be used to purchase goods or services that are not specified in the Contract. The unspecified items must be purchased according to the terms of Article 7.

1.1.6 Change Order: Written instrument prepared by the City and signed by City Engineer and Contractor, specifying the following:

1.1.6.1 a change in the Work;
1.1.6.2 a change in Contract Price, if any; and
1.1.6.3 a change in Contract Time, if any.

The value of a Change Order is the net amount after offsetting all deductions against all additions effected by the Change Order.

1.1.7 City: The City of Houston, a home rule municipality located principally within Harris County, Texas, including its successors and its authorized representatives.

1.1.8 City Engineer: The City Engineer, or the City employee representing the City Engineer, designated in the Agreement and authorized to represent the City, or successors.

1.1.9 Claim: Written demand or written assertion by one Party seeking adjustment of the Contract, payment of money, extension of time, or other relief under the Contract and includes, but is not limited to, claims for materials, labor, equipment, delay, changes, adjustments, substitutions, fees and third party claims. The Party making the Claim has the responsibility to substantiate the Claim.

1.1.10 Conditions of the Contract: General Conditions and Supplementary Conditions.

1.1.11 Construction Manager: Person or firm under contract with the City as its authorized representative to oversee and administer construction of the Work, and who may perform the role of Project Manager and Inspector, as designated by City Engineer in writing.

1.1.12 Contract: The Agreement; documents enumerated in and incorporated into the Agreement, Modifications, and amendments.

1.1.13 Contract Price: The monetary amount stated in the Agreement adjusted by Change Order, and increases or decreases in Unit Price Quantities, if any.

1.1.14 Contract Time: The number of days stated in the Agreement to substantially complete the Work, plus days authorized by Change Order.

1.1.15 Contractor: Person or firm identified as such in the Agreement including its successors and its authorized representatives.

1.1.16 Date of Commencement of the Work: Date established in Notice to Proceed on which Contract Time will commence. This date will not be changed by failure of Contractor, or persons or entities for whom Contractor is responsible, to act.

1.1.17 Date of Substantial Completion: Date that construction, or portion thereof designated by City Engineer, is certified by City Engineer to be substantially complete.

1.1.18 Design Consultant: Person or firm, under contract with the City, to provide professional services during construction and its authorized representatives. If a Design Consultant is not employed for services during construction, Project Manager will perform duties of Design Consultant designated in the Contract in addition to usual duties of Project Manager.

1.1.19 Drawings: Graphic and pictorial portions of the Contract that define the character and scope of the Work.

1.1.20 Extra Unit Price: Unit Prices, which may be required for completion of the Work. These Unit Prices and Unit Price Quantities are in the Contract and are included in Original Contract Price.

1.1.21 Furnish: To supply, pay for, deliver to the site, and unload.

1.1.22 General Requirements: The sections of Division 01 Specifications that specify administrative and procedural requirements and temporary facilities required for the Work.

1.1.23 Inspector: City's employee or agent authorized to assist with inspection of the Work.

1.1.24 Install: Unpack, assemble, erect, place, anchor, apply, work to dimension, finish, cure, clean, protect, and similar operations.

1.1.25 Legal Holiday: Day established by the City Council as a holiday.

1.1.26 Major Unit Price Work: An individual Unit Price item,

1.1.26.1 whose value is greater than five percent of Original Contract Price,

1.1.26.2 whose value becomes greater than five percent of Original Contract Price as the result of an increase in quantity, or

1.1.26.3 whose value is $100,000, whichever is least.

1.1.27 Minor Change in the Work: A written change in the Work, ordered by City Engineer, that does not change Contract Price or Contract Time, and that is consistent with the general scope of the Contract.

1.1.28 Modification: Change Order, Work Change Directive, or Minor Change in the Work.

1.1.29 Notice of Noncompliance: A written notice by City Engineer to Contractor regarding defective or nonconforming work that does not meet the Contract requirements, and that establishes a time by which Contractor shall correct the defective or nonconforming work.

1.1.30 Notice to Proceed: A written notice by City Engineer to Contractor establishing Date of Commencement of the Work.

1.1.31 Office of Business Opportunity: any reference to, or use of, the "Office of Affirmative Action" shall mean the Office of Business Opportunity, or any such future name to which it is changed.

1.1.32 Original Contract Price: The monetary amount originally stated in the Agreement.

1.1.33 Parties: Contractor and the City. When in singular form, refers to Contractor or the City.

1.1.34 Pollutant: Any materials subject to the Texas Solid Waste Disposal Act.

1.1.35 Pollutant Facility: Any facility regulated by the State of Texas to protect the health and environment from contamination by Pollutants, including without limitation, landfills, oil and gas production and storage facilities, wastewater facilities, waste injection wells, and storage tanks (including drums).

1.1.36 Product: Materials, equipment, or systems incorporated into the Work or to be incorporated into the Work.

1.1.37 Product Data: Illustrations, standard schedules, performance charts, instructions, brochures, diagrams, and other information furnished by Contractor to illustrate a Product.

1.1.38 Project: Total construction, of which the Work performed under the Contract may be the whole or a part, and which may include construction by the City or by separate contractors.

1.1.39 Project Manager: City Engineer's authorized representative for administration of the Work. Titles used within the City's departments may be different than those used in this definition.

1.1.40 Provide: Furnish and Install, complete, ready for intended use.

1.1.41 Samples: Physical examples that illustrate Products, or workmanship, and establish standards by which the Work is judged.

1.1.42 Shop Drawings: Drawings, diagrams, schedules, and other data specially prepared for the Work by Contractor, Subcontractor or Supplier, to illustrate a portion of the Work.

1.1.43 Specifications: Divisions 01 through 16 of the documents that are incorporated into the Agreement, consisting of written General Requirements and requirements for Products, standards, and workmanship for the Work, and performance of related services.

1.1.44 Stipulated Price: Single lump sum amount stated in the Contract for completion of the Work, or for designated portion of the Work.

1.1.45 Subcontractor: Person or firm that has direct or indirect contract with Contractor or with another Subcontractor to perform a portion of the Work and its authorized representatives.

1.1.46 Superintendent: Employee of Contractor having authority and responsibility to act for and represent Contractor.

1.1.47 Supplementary Conditions: Part of Conditions of the Contract that amends or supplements General Conditions.

1.1.48 Supplier: Manufacturer, distributor, materialman, or vendor having a direct agreement with Contractor or Subcontractor for Products, or services and its authorized representatives.

1.1.49 Surety: Corporate entity that is bound by one or more Bonds, and is responsible for completion of the Work, including the correction period, and for payment of debts incurred in fulfilling the Contract. Surety shall include co-surety or reinsurer, as applicable.

1.1.50 Underground Facilities: Pipes, conduits, ducts, cables, wires, manholes, vaults, tanks, tunnels, or other such facilities or attachments and encasements containing such facilities that exist below ground level.

1.1.51 Unit Price: An amount stated in the Contract for an individual, measurable item of work, which, when multiplied by actual quantity incorporated into the Work, amounts to full compensation for completion of the item, including work incidental to it.

1.1.52 Unit Price Quantities: Quantities indicated in the Contract that are approximations made by the City for contracting purposes.

1.1.53 Work: Entire construction required by the Contract, including all labor, Products, and services provided by Contractor to fulfill Contractor's obligations. The Work may constitute the whole or a portion of the Project.

1.1.54 Work Change Directive: A written change in the Work, ordered by City Engineer, that is within the general scope of the Contract and consisting of additions, deletions, or other revisions. A Work Change Directive will state proposed basis for adjustment, if any, in Contract Price or Contract Time, or both.

1.2 EXECUTION, CORRELATION, AND INTENT

1.2.1 Execution of the Contract by Contractor is conclusive that Contractor has visited the Work site, become familiar with local conditions under which the Work will be performed, and fully informed itself as to conditions and matters which can affect the Work or costs. Contractor further agrees that it has carefully correlated personal observations with requirements of the Contract.

1.2.2 The Contract and Modifications have been read and carefully considered by Contractor, who understands and agrees to their sufficiency for the Work. The Contract may not be more strongly construed against the City than against Contractor and Surety.

1.2.3 Contractor shall include all items necessary for proper execution and completion of the Work.

1.2.4 Reference to standard specifications, manuals, or codes of a technical society, organization, or association, or to laws or regulations of a governmental authority, whether specific or implied, mean the latest edition in effect as of date of receipt of bids, except as may be otherwise specifically stated in the Contract.

1.2.5 No provision of any referenced standard, specification, or manual changes the duties and responsibilities of the City, City Engineer, Contractor, or Design Consultant from those set forth in the Contract. Nor do these provisions assign to Design Consultant any duty or authority to supervise or direct performance of the Work or any duty or

authority to undertake any actions contrary to provisions of the Contract.

1.2.6 Organization of Specifications into divisions, sections, and articles and arrangement of Drawings does not control Contractor in dividing the Work among Subcontractors or in establishing the extent of work to be performed by any trade.

1.2.7 Unless otherwise defined in the Contract, words which have well-known construction industry technical meanings are used in the Contract in accordance with these recognized meanings.

1.3 OWNERSHIP AND USE OF DOCUMENTS

1.3.1 Drawings, Specifications, and other documents prepared by the City or by Design Consultant are instruments of service through which the Work to be executed by Contractor is described. Contractor may retain one Contract record set.

1.3.2 Neither Contractor, Subcontractor, nor Supplier will own or claim a copyright to documents contained in the Contract or any part of the Contract.

1.3.3 Documents contained in the Contract, prepared by the City or by Design Consultant, and copies furnished to Contractor, are for use solely with respect to the Work. They may not be used by Contractor, Subcontractor or Supplier on other projects or for additions to the Work, outside the scope of the Work, without the specific written consent of City Engineer, and Design Consultant, when applicable.

1.3.4 Contractor, Subcontractors, and Suppliers are granted a limited license to use and reproduce applicable portions of the Contract appropriate to and for use in execution of their work under the Contract.

1.4 *INTERPRETATION*

1.4.1 Specifications are written in an imperative streamlined form and are directed to Contractor, unless noted otherwise. When written in this form, words "shall be" are included by inference where a colon (:) is used within sentences or phrases.

1.4.2 In the interest of brevity, the Contract frequently omits modifying words such as "all" and "any" and articles such as "the" and "an", but an absent modifier or article is not intended to affect interpretation of a statement.

ARTICLE 2 - THE CITY

2.1 *LIMITATIONS OF THE CITY'S OFFICERS AND EMPLOYEES*

2.1.1 No officer or employee of the City may authorize Contractor to perform an act or work contrary to the Contract, except as otherwise provided in the Contract.

2.2 *DUTIES OF THE CITY*

2.2.1 If a building permit is required, the City will process an application for, and Contractor shall purchase the building permit before Date of Commencement of the Work.

2.2.2 The City will make available to Contractor a reproducible set of Drawings. Additional copies will be furnished, on Contractor's request, at the cost of reproduction.

2.2.3 When necessary for performance of the Work, the City will provide surveys describing physical characteristics, legal limitations, legal description of site, and horizontal and vertical control adequate to lay out the Work.

2.2.4 Information or services that the City is required to provide under the Contract will be provided by the City with reasonable promptness to avoid delay in orderly progress of the Work.

2.2.5 The Contract imposes no implied duty on the City. The City does not warrant any plans or specifications associated with the Contract.

2.2.6 Except as expressly stated in this Article, the City owes no duty to the Contractor or any subcontractor.

2.3 *AVAILABILITY OF LAND AND USE OF SITE*

2.3.1 The City will furnish, as indicated in the Contract, rights-of-way, land on which the Work is to be performed, and other land designated in the Contract for use by Contractor unless otherwise provided in the Contract.

2.3.2 Contractor shall confine operations at site to those areas permitted by law, ordinances, permits, and the Contract, and may not unreasonably encumber site with materials or equipment.

2.3.3 In addition to land provided by the City under Section 2.3, Contractor shall provide all land and access to land that may be required for use by Contractor for temporary construction facilities or for storage of materials and equipment, and shall indemnify the City during its use of the land as stated in Section 3.25.

2.4 *THE CITY'S RIGHT TO STOP THE WORK*

2.4.1 If Contractor fails to carry out the Work in accordance with the Contract, or fails to correct work which is not in accordance with requirements of the Contract as required in Sections 12.1 and 12.2, the City may, by Notice of Noncompliance, order Contractor to stop the Work or any portion of the Work until the cause for the order has been eliminated. However, the right of the City to stop the Work will not give rise to a Claim for delay or to a duty on the part of the City to exercise this right for the benefit of Contractor or any other person or entity, except to the extent required by Section 6.2. If Contractor corrects the defective or nonconforming work within the time established in Notice of Noncompliance, City Engineer will give written notice to Contractor to resume performance of the Work.

2.5 *THE CITY'S RIGHT TO CARRY OUT WORK*

2.5.1 If Contractor fails to carry out work in accordance with the Contract, and fails within the period established in a Notice of Noncompliance to correct the nonconforming work, the City may, after expiration of the required period, correct the deficiencies without prejudice to other remedies the City may have, including rights of the City under Section 14.1.

2.5.1.1 When the City corrects deficiencies, City Engineer will issue an appropriate Change Order and deduct from payments then or thereafter due Contractor the cost of correcting the deficiencies, including compensation for Design Consultant's and Construction Manager's additional services and expenses made necessary by such default, neglect, or failure. This action by the City and amounts charged to Contractor are both subject to prior approval of City Engineer. If payments, then or thereafter due Contractor, are not sufficient to cover these amounts, Contractor shall pay the difference to the City.

2.5.2 Notwithstanding the City's right to carry out work, maintenance and protection of the Work remains Contractor's responsibility, as provided in the Contract.

ARTICLE 3 - CONTRACTOR

3.1 *RESPONSIBILITIES*

3.1.1 Contractor shall maintain office with agent in the greater City of Houston area during the Contractor's performance under the Contract. Contractor shall file its street address with City Engineer.

3.1.2 Contractor and Contractor's employees shall not give or lend money or anything of value to an officer or employee of the City. Should this Paragraph 3.1.2 be violated, City Engineer may terminate the Contract under Section 14.1.

3.2 *REVIEW OF CONTRACT AND FIELD CONDITIONS BY CONTRACTOR*

3.2.1 Contractor shall carefully study and compare documents contained in the Contract with each other and with information furnished by the City pursuant to Section 2.2 and shall immediately report, in writing, any errors, inconsistencies, or omissions to City Engineer. If work is affected, Contractor shall obtain a written interpretation or clarification from City Engineer before proceeding with the affected work. However, Contractor will not be liable to the City for failure to report an error, inconsistency, or omission in the Contract unless Contractor had actual knowledge or should have had knowledge of the error, inconsistency, or omission.

3.2.2 Contractor shall take field measurements and verify field conditions, and shall carefully compare the conditions and other information known to Contractor with the Contract, before commencing activities. Contractor shall immediately report, in writing, to City Engineer for interpretation or clarification of discrepancies, inconsistencies, or omissions discovered during this process.

3.2.3 Contractor shall make a reasonable attempt to understand the Contract before requesting interpretation from City Engineer.

3.3 *SUPERVISION AND CONSTRUCTION PROCEDURES*

3.3.1 Contractor shall supervise, direct, and inspect the Work competently and efficiently, devoting the attention and applying the skills and

expertise as necessary to perform the Work in accordance with the Contract. Contractor is solely responsible and has control over construction means, methods, techniques, sequences, and procedures of construction; for safety precautions and programs in connection with the Work; and for coordinating all work under the Contract.

3.3.2 Regardless of observations or inspections by the City or City's consultants, Contractor shall perform and complete the Work in accordance with the Contract and submittals approved pursuant to Section 3.18. The City is not liable or responsible to Contractor or Surety for work performed by Contractor that is not in accordance with the Contract regardless of whether discovered during construction or after acceptance of the Work.

3.4 *SUPERINTENDENT*

3.4.1 Contractor shall employ a competent Superintendent and necessary assistants who shall be present at the site during performance of the Work. Communications given to Superintendent are binding on the Contractor.

3.4.2 Contractor shall notify City Engineer in writing of its intent to replace the Superintendent. Contractor may not replace the Superintendent if City Engineer makes a reasonable objection in writing.

3.5 *LABOR*

3.5.1 Contractor shall provide competent, qualified personnel to survey and lay out the Work and perform construction as required by the Contract. The City may, by written notice, require Contractor to remove from the Work any employee of Contractor or Subcontractors to whom City Engineer makes reasonable objection.

3.5.2 Contractor shall comply with the applicable Business Enterprise Policy set out in this Agreement and in the Supplementary Conditions, as set out in Chapter 15, Article V of the City of Houston Code of Ordinances.

3.5.3 When Original Contract Price is greater than $1,000,000, Contractor shall make Good Faith Efforts to award subcontracts or supply agreements in at least the percentages set out in the Supplementary Conditions for Business Enterprise Policy. Contractor acknowledges that it has reviewed the requirements for Good Faith Efforts on file with the City's Office of Business Opportunity and shall comply with them.

3.5.3.1 Contractor shall require written subcontracts with Business Enterprises and shall submit all disputes with Business Enterprises to voluntary mediation. Business Enterprise subcontracts complying with City Code of Ordinances Chapter 15, Article II must contain the terms set out in Subparagraph 3.5.3.2. If Contractor is an individual person, as distinguished from a corporation, partnership, or other legal entity, and the amount of the subcontract is $50,000 or less, the subcontract must also be signed by the attorneys of the respective parties.

3.5.3.2 Contractor shall ensure that subcontracts with Business Enterprise firms are clearly labeled **"THIS CONTRACT MAY BE SUBJECT TO MEDIATION ACCORDING TO THE TEXAS ALTERNATIVE DISPUTE RESOLUTION ACT"** and contain the following terms:

3.5.3.2.1 (Business Enterprise) may not delegate or subcontract more than 50 percent of work under this subcontract to any other subcontractor without the express written consent of the City's OBO Director (the "Director").

3.5.3.2.2 (Business Enterprise) shall permit representatives of the City of Houston, at all reasonable times, to perform (1) audits of the books and records of the Subcontractors and Suppliers, and (2) inspections of all places where work is to be undertaken in connection with this subcontract. (Business Enterprise) shall keep the books and records available for this purpose for at least four years after the end of its performance under this subcontract. Nothing in this provision shall affect the time for bringing a cause of action nor the applicable statute of limitations.

3.5.3.2.3 Within five business days of execution of this subcontract, Contractor and (Business Enterprise) shall designate in writing to the Director an agent for receiving any notice required or permitted to be given pursuant to Chapter 15 of the Houston City Code of Ordinances, along with the street and mailing address and phone number of the agent.

3.5.4 The requirements and terms of the City of Houston Pay or Play Program, as set out in Executive Order 1-7 and Ordinance 2007-0534, are incorporated into the Contract for all purposes. Contractor shall comply with the terms and conditions of the Pay or Play Program as they are set out at the time of City Council approval of this

agreement. IF CONTRACTOR DOES NOT PAY IN ACCORDANCE WITH THE PAY OR PLAY PROGRAM WITHIN 30 DAYS OF THE DATE CITY ENGINEEER SENDS CONTRACTOR WRITTEN NOTIFICATION, CITY CONTROLLER MAY DEDUCT FUNDS UP TO THE AMOUNT OWED FROM ANY PAYMENTS OWED TO CONTRACTOR UNDER THIS AGREEMENT, AND CONTRACTOR WAIVES ANY RECOURSE.

3.6 *PREVAILING WAGE RATES*

3.6.1 Contractor shall comply with governing statutes providing for labor classification of wage scales for each craft or type of laborer, worker, or mechanic.

3.6.2 Prevailing wage rates applicable to the Work may be one or a combination of the following wage rates identified in Division 00:

- 3.6.2.1 Federal Wage Rate General Decisions
  - 3.6.2.1.1 Highway Rates
  - 3.6.2.1.2 Building Rates
  - 3.6.2.1.3 Heavy Construction Rates
  - 3.6.2.1.4 Residential Rates
- 3.6.2.2 City Prevailing Wage Rates
  - 3.6.2.2.1 Building Construction Rates
  - 3.6.2.2.2 Engineering Construction Rates
  - 3.6.2.2.3 Asbestos Worker Rates

3.6.3 Each week Contractor shall submit to the City's Mayor's Office of Business Opportunity certified copies of payrolls showing classifications and wages paid by Contractor, Subcontractors, and Suppliers for each employee under the Contract, for any day included in the Contract.

3.7 *LABOR CONDITIONS*

3.7.1 In the event of labor disputes affecting Contractor or Contractor's employees, Contractor shall utilize all possible means to resolve disputes in order that the Work not be delayed to any extent. These means will include seeking injunctive relief and filing unfair labor practice charges, and any other action available to Contractor.

3.7.2 When Contractor has knowledge that any actual or potential labor dispute is delaying or is threatening to delay timely performance of the Work, Contractor shall immediately notify City Engineer in writing. No Claims will be accepted by City Engineer for costs incurred as a result of jurisdictional or labor disputes.

3.8 *DRUG DETECTION AND DETERRENCE*

3.8.1 It is the policy of the City to achieve a drug-free work force and to provide a workplace that is free from the use of illegal drugs and alcohol. It is also the policy of the City that manufacture, distribution, dispensation, possession, sale, or use of illegal drugs or alcohol by contractors while on the City's premises is prohibited. By executing the Contract, Contractor represents and certifies that it meets and will comply with all requirements and procedures set forth in the Mayor's Policy on Drug Detection and Deterrence, City Council Motion No. 92-1971 ("Mayor's Policy") and the Mayor's Drug Detection and Deterrence Procedures for Contractors, Executive Order No. 1-31, (Revised) ("Executive Order"). Mayor's Policy is on file in the office of the City Secretary. Copies of Executive Order may be obtained at the location specified in the Advertisement for Bids.

3.8.1.1 The Executive Order applies to the City's contracts for labor or services except the following:

- 3.8.1.1.1 contracts authorized by Emergency Purchase Orders,
- 3.8.1.1.2 contracts in which imposition of requirements of the Executive Order would exclude all potential bidders or proposers, or would eliminate meaningful competition for the Contract,
- 3.8.1.1.3 contracts with companies that have fewer than 15 employees during any 20-week period during a calendar year and no safety impact positions,
- 3.8.1.1.4 contracts with non-profit organizations providing services at no cost or reduced cost to the public, and
- 3.8.1.1.5 contracts with federal, state, or local governmental entities.

3.8.1.2 Prior to execution of the Contract, Contractor shall have filed with the City:

- 3.8.1.2.1 a Drug Policy Compliance Agreement form (Attachment "A" to the Executive Order), and
- 3.8.1.2.2 a copy of Contractor's drug free workplace policy, and
- 3.8.1.2.3 a written designation of all safety impact positions, if applicable, or a Contractor's Certification of a No Safety Impact Positions form (Attachment "C" to the Executive Order).

3.8.1.3 Every six months during performance of the Contract and upon completion of the Contract, Contractor shall file a Drug Policy Compliance Declaration form (Attachment "B" to the Executive Order). The Contractor shall submit the Drug Policy Compliance Declaration within 30 days of expiration of each six-month period of performance and within 30 days of completion of the Contract. The first six-month period shall begin on Date of Commencement of the Work.

3.8.1.4 Contractor shall have a continuing obligation to file updated designation of safety impact positions when additional safety impact positions are added to Contractor's employee workforce during performance of the Work.

3.8.1.5 Contractor shall require its Subcontractors and Suppliers to comply with the Mayor's Policy and Executive Order. Contractor is responsible for securing and maintaining required documents from Subcontractors and Suppliers for the City inspection throughout the term of the Contract.

3.8.1.6 Failure of Contractor to comply with requirements will be a material breach of the Contract entitling the City to terminate in accordance with Section 14.1.

3.9 *MATERIALS & EQUIPMENT*

3.9.1 Unless otherwise provided in the Contract, Contractor shall provide and assume full responsibility for Products, labor, transportation, construction equipment and machinery, tools, appliances, fuel, power, light, heat, telephone, water, sanitary facilities, transportation, temporary facilities, supplies, and other facilities and incidentals necessary for Furnishing, performing, testing, starting-up, and completing the Work.

3.9.1.1 Contractor, Subcontractors, and Suppliers shall use Ultra Low Sulfur Diesel Fuel in all diesel operating vehicles and motorized equipment utilized in performing the Work. Ultra Low Sulfur Diesel Fuel is defined as diesel fuel having 15 ppm or the applicable standard set by state or federal law or rules and regulations of the Texas Commission on Environmental Quality, or the Environmental Protection Agency, whichever is less in sulfur content. Off-road Ultra Low Sulfur Diesel Fuel may be used in lieu of on-road Ultra Low Sulfur Diesel Fuel. Contractor shall provide, upon request by City Engineer, proof that Contractor, Subcontractors, and Suppliers are using Ultra Low Sulfur Diesel Fuel.

3.9.2 Contractor shall provide Products that are:

3.9.2.1 new, unless otherwise required or permitted by the Contract, and

3.9.2.2 of specified quality.

If required by City Engineer, Contractor shall furnish satisfactory evidence, including reports of required tests, as to kind and quality of Products.

3.9.3 Contractor shall store Products in a safe, neat, compact, and protected manner. Contractor shall also store Products delivered during the work, along the right-of-way:

3.9.3.1 so as to cause the least inconvenience to property owners, tenants, and general public; and

3.9.3.2 so as not to block access to, or be closer than, three feet to any fire hydrant.

Contractor shall protect trees, lawns, walks, drives, streets, and other improvements that are to remain, from damage. If private or public property is damaged by Contractor, Contractor shall, at its sole expense, restore the damaged property to at least its original condition.

3.9.3.1 Contractor shall obtain City Engineer's approval for storage areas used for Products for which payment has been requested under Paragraph 9.6.1. Contractor shall provide the City access to the storage areas for inspection purposes. Products, once paid for by the City, become the property of the City and may not be removed from place of storage, without City Engineer's written permission except for a movement to the site. Contractor's Installation Floater, required under Section 11.2, shall cover all perils, including loss or damage to Products during storage, loading, unloading, and transit to the site.

3.10 *PRODUCT OPTIONS AND SUBSTITUTIONS*

3.10.1 For Products specified by reference standards or by description only, Contractor may provide any Product meeting those standards or description.

3.10.2 For Products specified by naming one or more manufacturers with provision for substitutions or equal, Contractor may submit a request for substitution for any manufacturer not named.

3.10.3 City Engineer will consider requests for substitutions only within the first 15 percent of Contract Time, or first 90 days after date of Notice to Proceed, whichever is less.

3.10.4 Contractor shall document each request for substitution with complete data

substantiating compliance of proposed substitution with the Contract.

3.10.5 A request for substitution constitutes a representation that Contractor:

3.10.5.1 has investigated the proposed Product and determined that it meets or exceeds the quality level of the specified Product;

3.10.5.2 shall provide the same warranty for the substitution as for the specified Product;

3.10.5.3 shall coordinate installation of the proposed substitution and make changes to other work which may be required for the Work to be completed, with no additional cost or increase in time to the City;

3.10.5.4 confirms that cost data is complete and includes all related costs under the Contract;

3.10.5.5 waives Claim for additional costs or time extensions that may subsequently become apparent; and

3.10.5.6 shall provide review or redesign services by a design consultant with appropriate professional license and shall obtain re-approval and permits from authorities.

3.10.6 City Engineer will not consider and will not approve substitutions when:

3.10.6.1 they are indicated or implied on Shop Drawing or Product Data submittals without separate written request; or

3.10.6.2 acceptance will require revision to the Contract.

3.10.7 City Engineer may reject requests for substitution, and his decision will be final and binding on the Parties.

3.11 *CASH ALLOWANCES*

3.11.1 Contract Price includes Cash Allowances as identified in the Contract.

3.11.2 The City will pay the actual costs of Cash Allowance item exclusive of profit, overhead or administrative costs. If actual costs exceed the Cash Allowance, City Engineer must approve a Change Order for the additional costs.

3.12 *WARRANTY*

3.12.1 Contractor warrants to the City that Products furnished under the Contract are:

3.12.1.1 free of defects in title;

3.12.1.2 of good quality; and

3.12.1.3 new, unless otherwise required or permitted by the Contract.

If required by the City Engineer, Contractor shall furnish satisfactory evidence as to kind, quality and title of Products, and that Products conform to requirements of the Contract.

3.12.2 In the event of a defect in a Product, either during construction or warranty period, Contractor shall take appropriate action with manufacturer of Product to assure correction or replacement of defective Product with minimum delay.

3.12.3 Contractor warrants that the Work is free of defects not inherent in the quality required or permitted, and that the Work does conform with the requirements of the Contract. Contractor further warrants that the Work has been performed in a thorough and workmanlike manner.

3.12.4 Contractor warrants that the Work is free of concentrations on polychlorinated biphenyl (PCB) and other substances defined as hazardous by the Comprehensive Environmental Response Compensation and Liability Act (CERCLA) or any other applicable law or regulation.

3.12.5 Work not conforming to requirements of Section 3.12, including substitutions not properly approved and authorized, may be considered nonconforming work.

3.12.6 Contractor's warranty excludes remedy for damage or defect caused by:

3.12.6.1 improper or insufficient maintenance by the City;

3.12.6.2 normal wear and tear under normal usage; or

3.12.6.3 claim that hazardous material was incorporated into the Work, if that material was specified in the Contract.

3.12.7 Contractor warrants that title to all work covered by Contractor's request for payment passes to the City upon incorporation into the Work or upon Contractor's receipt of payment, whichever occurs first. The Contractor further warrants that the title is free of all liens, claims, security interests or other interests ("Encumbrances"). If not, upon written demand from City Engineer, Contractor shall immediately take legal action necessary to remove Encumbrances.

3.13 *TAXES*

3.13.1 Contractor shall pay all sales, consumer, use, and similar taxes, which are in effect or scheduled to go into effect on or before bids are received, related to work provided by Contractor.

3.13.2 Contractor shall obtain, and require Subcontractors and Suppliers to obtain, necessary permits from the state and local taxing authorities to perform contractual obligations under the Contract, including sales tax permits.

3.13.3 The City is exempt from the Federal Transportation and Excise Tax. Contractor shall comply with federal regulations governing the exemptions.

3.13.4 Products incorporated into the Work are exempt from state sales tax according to provisions of the TEX. TAX CODE ANN. CH. 151, Subsection H.

3.14 *PERMITS, FEES, AND NOTICES*

3.14.1 Unless otherwise provided in the Contract, Contractor shall secure and pay for all construction permits, licenses, and inspections:

3.14.1.1 necessary for proper execution and completion of the Work; and

3.14.1.2 legally required at time bids are received.

3.15 *CONSTRUCTION SCHEDULES*

3.15.1 On receipt of Notice to Proceed, Contractor shall promptly prepare and submit construction schedule for the Work for City Engineer's review. The schedule must reflect the minimum time required to complete the Work not to exceed Contract Time.

3.15.2 Contractor shall give 24-hour written notice to City Engineer before commencing work or resuming work where work has been stopped. Contractor shall also give the same notice to inspectors.

3.15.3 Contractor shall incorporate milestones specified in Summary of Work Specification into the construction schedule. Contractor's failure to meet a milestone, as determined by City Engineer, may be considered a material breach of the Contract.

3.15.4 Each month, Contractor shall submit to City Engineer a copy of an updated construction schedule indicating actual progress, incorporating applicable changes, and indicating courses of action required to assure completion of the Work within Contract Time.

3.15.5 Contractor shall keep a current schedule of submittals that coordinates with the construction schedule, and shall submit the initial schedule of submittals to City Engineer for approval.

3.16 *DOCUMENTS AND SAMPLES AT THE SITE*

3.16.1 Contractor shall maintain at the site, and make available to City Engineer, one record copy of Drawings, Specifications, and Modifications. Contractor shall maintain the documents in good order and marked currently to record changes and selections made during construction. In addition, Contractor shall maintain at the site, approved Shop Drawings, Product Data, Samples, and similar submittals, which will be delivered to City Engineer prior to final inspection as required in Paragraph 9.11.4.

3.16.2 Contractor shall maintain all books, documents, papers, accounting records, and other relevant documentation pursuant to the Work and shall make the books, documents, papers, and accounting records available to representatives of the City for review and audits during the Contract term and for the greater of three years following Date of Substantial Completion or until all litigation or audits are fully resolved.

3.16.3 Contractor shall provide to City Attorney all documents and records that City Attorney deems necessary to assist in determining Contractor's compliance with the Contract, with the exception of those documents made confidential by federal or state law or regulation.

3.17 *MANUFACTURER'S SPECIFICATIONS*

3.17.1 Contractor shall handle, store, and Install Products and perform all work in the manner required by Product manufacturer. Should the Contract and manufacturer's instructions conflict, Contractor shall report conflict to City Engineer for resolution prior to proceeding with the affected work.

3.17.2 References in the Contract to the manufacturer's specifications, directions, or recommendations, mean manufacturer's current published documents in effect as of date of receipt of bids, or in the case of a Modification, as of date of Modification.

3.18 SHOP DRAWINGS, PRODUCT DATA, AND SAMPLES

3.18.1 Shop Drawings, Product Data, and Samples are not part of the Contract. The purpose of Contractor submittals is to demonstrate, for those portions of the Work for which submittals are required, the way Contractor proposes to conform to information given and design concept expressed in the Contract.

3.18.2 Contractor shall submit to Project Manager for review the Shop Drawings, Product Data, and Samples, which are required by the Contract. Review by Project Manager is subject to limitations of Paragraph 4.1.4. Contractor shall transmit the submittals to the Project Manager with reasonable promptness and in a sequence, so as to cause no delay in the Work or in activities of the City or of separate contractors. Contractor shall transmit submittals in time to allow a minimum of 30 days for Project Manager's review prior to date Contractor needs reviewed submittals returned. This time may be shortened for a particular job requirement if approved by Project Manager in advance of submittal.

3.18.3 Contractor shall certify that the content of submittals conforms to the Contract without exception by affixing Contractor's approval stamp and signature. By certifying and submitting Shop Drawings, Product Data, and Samples, Contractor represents, and Contractor's stamp of approval shall state, that Contractor has determined and verified materials, quantities, field measurements, and field construction criteria related to the submittal, and has checked and coordinated information contained within the submittals with requirements of the Contract.

3.18.4 Contractor may not perform any work requiring submittal and review of Shop Drawings, Product Data, or Samples until the submittal has been returned with appropriate review decision by the Project Manager. Contractor shall perform work in accordance with the review.

3.18.5 If Contractor performs any work requiring submittals prior to review and acceptance of the submittals by Project Manager, such work is at Contractor's risk and the City is not obligated to accept work if the submittals are later found to be unacceptable.

3.18.6 If, in the opinion of Project Manager, the submittals are incomplete, or demonstrate an inadequate understanding of the Work or lack of review by the Contractor, then submittals may be returned to the Contractor for correction and resubmittal.

3.18.7 Contractor shall direct specific attention in writing and on the resubmitted Shop Drawings, Product Data, or Samples to any additional proposed revisions, other than those revisions requested by Project Manager on previous submittals.

3.18.8 Contractor is not relieved of responsibility for deviations from requirements of the Contract by Project Manager's review of Shop Drawings, Product Data, or Samples unless Contractor has specifically informed Project Manager in writing of the deviation at the time of the submittal, and Project Manager has given written approval of the deviation.

3.18.9 When professional certification of performance criteria of Products is required by the Contract, the City may rely upon accuracy and completeness of the calculations and certifications.

3.18.10 For Product colors or textures to be selected by the City, Contractor shall submit all samples together to allow preparation of a complete selection schedule.

3.18.11 Contractor shall submit informational submittals, on which Project Manager is not expected to take responsive action, as required by the Contract.

3.18.12 Submittals made by Contractor which are not required by the Contract may be returned to Contractor without action.

3.19 CULTURAL RESOURCES AND ENDANGERED SPECIES

3.19.1 Contractor may not remove or disturb, or cause to be removed or disturbed, any historical, archaeological, architectural, or other cultural artifacts, relics, vestiges, remains, or objects of antiquity. If Contractor discovers one of these items, Contractor shall immediately notify City Engineer and further comply with the requirements of 13 Tex. Admin. Code Chs. 25 and 26 (2002), or successor regulation. Contractor shall protect site and cultural resources from further disturbance until professional examination can be made or until clearance to proceed is authorized in writing by City Engineer.

3.19.2 Should either threatened or endangered plant or animal species be encountered,

Contractor shall cease work immediately in the area of encounter and notify City Engineer.

3.20 *CUTTING AND PATCHING*

3.20.1 Contractor is responsible for necessary cutting, fitting, and patching to accomplish the Work and shall suitably support, anchor, attach, match, and trim or seal materials to work of other contractors. Contractor shall coordinate the Work with work of other contractors to minimize conflicts, as provided in Article 6.

3.20.2 Contractor may not endanger work by cutting, digging, or other action, and may not cut or alter work of other contractors except by written consent of City Engineer and affected contractor.

3.21 *CLEANING*

3.21.1 Contractor shall perform daily cleanup of all dirt, debris, scrap materials and other disposable items resulting from Contractor's operations, whether on-site or off-site. Unless otherwise authorized in writing by City Engineer, Contractor shall keep all streets, access streets, driveways, areas of public access, walkways, and other designated areas clean and open at all times.

3.21.2 Failure of Contractor to maintain a clean site, including access streets, is the basis for City Engineer to issue a Notice of Noncompliance. Should compliance not be attained within the time period in the Notice of Noncompliance, City Engineer may authorize necessary cleanup to be performed by others and the cost of the cleanup will be deducted from monies due Contractor.

Contractor shall legally dispose off-site, all waste materials and other excess materials resulting from Contractor's operations.

3.22 *SANITATION*

3.22.1 Contractor shall provide and maintain sanitary facilities at site for use of all construction forces under the Contract. Newly-constructed or existing sanitary facilities may not be used by Contractor.

3.23 *ACCESS TO WORK AND TO INFORMATION*

3.23.1 Contractor shall provide the City, Design Consultant, testing laboratories, and governmental agencies which have jurisdictional interests, access to the Work in preparation and in progress wherever located. Contractor shall provide proper and safe conditions for the access.

3.23.2 If required by City Engineer, Contractor shall furnish information concerning character of Products and progress and manner of the Work, including information necessary to determine cost of the Work, such as number of employees, pay of employees, and time employees worked on various classes of the Work.

3.24 *TRADE SECRETS*

3.24.1 Contractor will not make any claim of ownership of trade secrets as to products used in the Work, or preparation of any mixture for the Work. City Engineer will at all times have the right to demand and Contractor shall furnish information concerning materials or samples of ingredients of any materials used, or proposed to be used, in preparation of concrete placed or other work to be done. Mixtures, once agreed on, shall not be changed in any manner without knowledge and consent of City Engineer. The City will make its best efforts to protect confidentiality of proprietary information.

3.25 *INDEMNIFICATION*

3.25.1 CONTRACTOR AGREES TO AND SHALL DEFEND, INDEMNIFY, AND HOLD THE CITY, ITS AGENTS, EMPLOYEES, OFFICERS, AND LEGAL REPRESENTATIVES (COLLECTIVELY THE "CITY") HARMLESS FOR ALL CLAIMS, CAUSES OF ACTION, LIABILITIES, FINES, AND EXPENSES (INCLUDING, WITHOUT LIMITATION, ATTORNEYS' FEES, COURT COSTS, AND ALL OTHER DEFENSE COSTS AND INTEREST) FOR INJURY, DEATH, DAMAGE, OR LOSS TO PERSONS OR PROPERTY SUSTAINED IN CONNECTION WITH OR INCIDENTAL TO PERFORMANCE UNDER THE CONTRACT INCLUDING, WITHOUT LIMITATION, THOSE CAUSED BY:

3.25.1.1 CONTRACTOR'S AND/OR ITS AGENTS', EMPLOYEES', OFFICERS', DIRECTORS', CONTRACTORS', OR SUBCONTRACTORS' (COLLECTIVELY IN NUMBERED SUBPARAGRAPHS .1 through .3, "CONTRACTOR") ACTUAL OR ALLEGED NEGLIGENCE OR INTENTIONAL ACTS OR OMISSIONS;

3.25.1.2 THE CITY'S AND CONTRACTOR'S ACTUAL OR ALLEGED CONCURRENT NEGLIGENCE, WHETHER CONTRACTOR IS IMMUNE FROM LIABILITY OR NOT;

3.25.1.3 THE CITY'S AND CONTRACTOR'S ACTUAL OR ALLEGED STRICT PRODUCTS LIABILITY OR STRICT STATUTORY LIABILITY, WHETHER CONTRACTOR IS IMMUNE FROM LIABILITY OR NOT.

CONTRACTOR SHALL DEFEND, INDEMNIFY, AND HOLD THE CITY HARMLESS DURING THE TERM OF THE CONTRACT AND FOR FOUR YEARS AFTER THE CONTRACT TERMINATES. CONTRACTOR SHALL NOT INDEMNIFY THE CITY FOR THE CITY'S SOLE NEGLIGENCE.

3.25.2 NOTWITHSTANDING ANYTHING TO THE CONTRARY, THE LIABILITY OF CONTRACTOR FOR THE CITY'S CONCURRENT NEGLIGENCE SHALL NOT EXCEED $1,000,000.

3.26 *RELEASE AND INDEMNIFICATION – PATENT, COPYRIGHT, TRADEMARK, AND TRADE SECRET INFRINGEMENT*

3.26.1 UNLESS OTHERWISE SPECIFICALLY REQUIRED BY THE CONTRACT, CONTRACTOR AGREES TO AND SHALL RELEASE AND DEFEND, INDEMNIFY, AND HOLD HARMLESS THE CITY, ITS AGENTS, EMPLOYEES, OFFICERS, AND LEGAL REPRESENTATIVES (COLLECTIVELY THE "CITY") FROM ALL CLAIMS OR CAUSES OF ACTION BROUGHT AGAINST THE CITY BY ANY PARTY, INCLUDING CONTRACTOR, ALLEGING THAT THE CITY'S USE OF ANY EQUIPMENT, SOFTWARE, PROCESS, OR DOCUMENTS CONTRACTOR FURNISHES DURING THE TERM OF THE CONTRACT INFRINGES ON A PATENT, COPYRIGHT, OR TRADEMARK, OR MISAPPROPRIATES A TRADE SECRET. CONTRACTOR SHALL PAY ALL COSTS (INCLUDING, WITHOUT LIMITATION, ATTORNEYS' FEES, COURT COSTS, AND ALL OTHER DEFENSE COSTS, AND INTEREST) AND DAMAGES AWARDED.

3.26.2 CONTRACTOR SHALL NOT SETTLE ANY CLAIM ON TERMS WHICH PREVENT THE CITY FROM USING THE EQUIPMENT, SOFTWARE, PROCESS, OR PRODUCT WITHOUT THE CITY ENGINEER'S PRIOR WRITTEN CONSENT.

3.26.3 UNLESS OTHERWISE SPECIFICALLY REQUIRED BY THE CONTRACT, WITHIN 60 DAYS AFTER BEING NOTIFIED OF THE CLAIM, CONTRACTOR SHALL, AT ITS OWN EXPENSE, EITHER:

3.26.3.1 OBTAIN FOR THE CITY THE RIGHT TO CONTINUE USING THE EQUIPMENT, SOFTWARE, PROCESS, OR PRODUCT, OR

3.26.3.2 IF BOTH PARTIES AGREE, REPLACE OR MODIFY THEM WITH COMPATIBLE AND FUNCTIONALLY EQUIVALENT PRODUCTS.

IF NONE OF THESE ALTERNATIVES IS REASONABLY AVAILABLE, THE CITY MAY RETURN THE EQUIPMENT, SOFTWARE, OR PRODUCT, OR DISCONTINUE THE PROCESS, AND CONTRACTOR SHALL REFUND THE PURCHASE PRICE.

3.27 *INDEMNIFICATION PROCEDURES*

3.27.1 *Notice of Indemnification Claims:* If the City or Contractor receives notice of any claim or circumstances which could give rise to an indemnified loss, the receiving party shall give written notice to the other Party within 10 days. The notice must include the following:

3.27.1.1 a description of the indemnification event in reasonable detail,

3.27.1.2 the basis on which indemnification may be due, and

3.27.1.3 the anticipated amount of the indemnified loss.

This notice does not estop or prevent the City from later asserting a different basis for indemnification or a different amount of indemnified loss than that indicated in the initial notice. If the City does not provide this notice within the 10-day period, it does not waive any right to indemnification except to the extent that Contractor is prejudiced, suffers loss, or incurs expense because of the delay.

3.27.2 *Defense of Indemnification Claims:*

3.27.2.1 *Assumption of Defense:* Contractor may assume the defense of the claim at its own expense with counsel chosen by it that is reasonably satisfactory to the City. Contractor shall then control the defense and any negotiations to settle the claim. Within 10 days after receiving written notice of the indemnification request, Contractor must advise the City as to whether or not it will defend the claim. If Contractor does not assume the defense, the City shall assume and control the defense, and all defense expenses constitute an indemnified loss.

3.27.2.2 *Continued Participation:* If Contractor elects to defend the claim, the City may

retain separate counsel to participate in, but not control, the defense and to participate in, but not control, any settlement negotiations. Contractor may settle the claim without the consent or agreement of the City, unless it:

3.27.2.2.1 would result in injunctive relief or other equitable remedies or otherwise require the City to comply with restrictions or limitations that adversely affect the City;

3.27.2.2.2 would require the City to pay amounts that Contractor does not fund in full; or

3.27.2.2.3 would not result in the City's full and complete release from all liability to the plaintiffs or claimants who are parties to or otherwise bound by the settlement.

3.28 ***CONTRACTOR DEBT***

IF CONTRACTOR, AT ANY TIME DURING THE TERM OF THIS AGREEMENT, INCURS A DEBT, AS THE WORD IS DEFINED IN SECTION 15-122 OF THE HOUSTON CITY CODE OF ORDINANCES, IT SHALL IMMEDIATELY NOTIFY CITY CONTROLLER IN WRITING. IF CITY CONTROLLER BECOMES AWARE THAT CONTRACTOR HAS INCURRED A DEBT, IT SHALL IMMEDIATELY NOTIFY CONTRACTOR IN WRITING. IF CONTRACTOR DOES NOT PAY THE DEBT WITHIN 30 DAYS OF EITHER SUCH NOTIFICATION, CITY CONTROLLER MAY DEDUCT FUNDS IN AN AMOUNT EQUAL TO THE DEBT FROM ANY PAYMENTS OWED TO CONTRACTOR UNDER THIS AGREEMENT, AND CONTRACTOR WAIVES ANY RECOURSE THEREFOR. CONTRACTOR SHALL FILE A NEW AFFIDAVIT OF OWNERSHIP, USING THE FORM DESIGNATED BY CITY, BETWEEN FEBRUARY 1 AND MARCH 1 OF EVERY YEAR DURING THE TERM OF THE CONTRACT.

ARTICLE 4 - ADMINISTRATION OF THE CONTRACT

4.1 *CONTRACT ADMINISTRATION*

4.1.1 City Engineer will provide administration of the Contract and City Engineer is authorized to issue Change Orders, Work Change Directives, and Minor Changes in the Work.

4.1.2 City Engineer may act through Project Manager, Design Consultant, or Inspector. When the term "City Engineer" is used in the Contract, action by City Engineer is required unless City Engineer delegates his authority in writing. The City Engineer may not delegate authority to render decisions under Section 4.4.

The City does not have control over or charge of, and is not responsible for, supervision, construction, and safety procedures enumerated in Section 3.3. The City does not have control over or charge of and is not responsible for acts or omissions of Contractor, Subcontractors, or Suppliers.

4.1.3 The City and Design Consultant may attend project meetings and visit the site to observe progress and quality of the Work. The City and Design Consultant are not required to make exhaustive or continuous on-site inspections to check quality or quantity of the Work.

4.1.4 Project Manager will review and approve or take other appropriate action on Contractor's submittals, but only for limited purpose of checking for conformance with information given and design concept expressed in the Contract.

4.1.5 Project Manager's review of the submittals is not conducted for purpose of determining accuracy and completeness of other details, such as dimensions and quantities, or for substantiating instructions for installation or performance of Products, all of which remain the responsibility of Contractor.

4.1.6 Project Manager's review of submittals does not relieve Contractor of its obligations under Sections 3.3, 3.12, and 3.18. Review does not constitute approval of safety precautions or, unless otherwise specifically stated by Project Manager in writing, of construction means, methods, techniques, sequences, or procedures. Project Manager's review of a specific item does not indicate approval of an assembly of which the item is a component.

4.1.7 Based on field observations and evaluations, Project Manager will process Contractor's progress payments, certify amounts due Contractor, and issue Certificates for Payment in the amount certified.

4.1.8 Project Manager will receive and forward to City Engineer for his review and records, written warranties and related documents required by the Contract and assembled by Contractor.

4.1.9 Upon written request by Contractor or Project Manager, City Engineer will resolve matters of interpretation of or performance of the Contract, which are not Claims. City Engineer's decisions are final and binding on the Parties.

4.1.10 City Engineer may reject work which does not conform to the Contract.

4.1.11 When City Engineer considers it necessary to implement the intent of the Contract, City Engineer may require additional inspection or testing of work in accordance with Paragraphs 13.6.3 and 13.6.4, whether such work is fabricated, Installed, or completed.

4.2 *COMMUNICATIONS IN ADMINISTRATION OF THE CONTRACT*

4.2.1 Except as otherwise provided in the Contract or when authorized by City Engineer in writing, Contractor shall communicate with Project Manager. Contractor shall communicate with Design Consultant, Design Consultant's subconsultants, and separate contractors through Project Manager. The City will communicate with Subcontractors and Suppliers through Contractor.

4.3 *CLAIMS AND DISPUTES*

4.3.1 *Documentation by Project Manager:* Contractor shall submit Claims, including those alleging an error or omission by Project Manager or Design Consultant, to Project Manager for documentation and recommendation to City Engineer.

4.3.2 *Decision of City Engineer:* Upon submission of Claim by Project Manager or Contractor, City Engineer will resolve Claims in accordance with Section 4.4.

4.3.3 *Time Limits on Claims:* Claims by Contractor must be made within 90 days after occurrence of event giving rise to the Claim.

4.3.4 *Continuing the Contract Performance:* Pending final resolution of a Claim including referral to non-binding mediation, unless otherwise agreed in writing, Contractor shall proceed diligently with the performance of the Contract and the City will continue to make payments in accordance with the Contract.

4.3.4.1 Pending final resolution of a Claim including referral to non-binding mediation, Contractor is responsible for safety and protection of physical properties and conditions at site.

4.3.5 *Claims for Concealed or Unknown Conditions:* Concealed or unknown physical conditions include utility lines, other man-made structures, storage facilities, Pollutants and Pollutant Facilities, and the like, but do not include conditions arising from Contractor operations, or failure of Contractor to properly protect and safeguard subsurface facilities. Concealed conditions also include naturally-occurring soil conditions outside the range of soil conditions identified through geotechnical investigations, but do not include conditions arising from groundwater, rain, or flood.

4.3.5.1 If conditions are encountered at the site which are Underground Facilities or otherwise concealed or unknown conditions which differ materially from:

4.3.5.1.1 those indicated by the Contract; or

4.3.5.1.2 conditions which Contractor could have discovered through site inspection, geotechnical testing, or otherwise;

then Contractor will give written notice to City Engineer no later than five days after Contractor's first observation of the condition and before condition is disturbed. Contractor's failure to provide notice constitutes a waiver of a Claim.

4.3.5.2 City Engineer will promptly investigate concealed or unknown conditions. If City Engineer determines that conditions at the site are not materially different and that no change in Contract Price or Contract Time is justified, City Engineer will notify Contractor in writing, stating reasons. If City Engineer determines the conditions differ materially and cause increase or decrease in Contractor's cost or time required for performance of part of the Work, City Engineer will recommend an adjustment in Contract Price or Contract Time, or both, as provided in Article 7. Opposition by a Party to the City Engineer's determination must be made within 21 days after City Engineer has given notice of the decision. If the Parties cannot agree on adjustment to Contract Price or Contract Time, adjustment is subject to further proceedings pursuant to Section 4.4.

4.3.6 *Claims for Additional Cost:* If Contractor wishes to make a Claim for increase in Contract Price, Contractor shall give written notice before proceeding with work for which Contractor intends to submit a Claim. Prior notice is not required for Claims relating to an emergency

endangering life or property arising under Section 10.4.

4.3.6.1 Contractor may file a Claim in accordance with Section 4.4 if Contractor believes it has incurred additional costs, for the following reasons:

- 4.3.6.1.1 written interpretation of City Engineer;
- 4.3.6.1.2 order by City Engineer to stop the Work when Contractor is not at fault;
- 4.3.6.1.3 suspension of the Work by City Engineer;
- 4.3.6.1.4 termination of the Contract by City Engineer; or
- 4.3.6.1.5 The City's non-compliance with another provision of the Contract.

4.3.6.2 No increase in Contract Price is allowed for delays or hindrances to the Work, except for direct and unavoidable extra costs to Contractor caused by failure of the City to provide information and services, or to make land and materials available, when required of the City under the Contract. Any increase claimed is subject to the provisions of Section 4.4 and Article 7.

4.3.6.3 The City is not liable for Claims for delay when Date of Substantial Completion occurs prior to expiration of Contract Time.

4.3.7 *Claims for Additional Time:* If Contractor wishes to make a Claim for an increase in Contract Time, Contractor shall give written notice as provided in Section 8.2. In case of continuing delay, only one Claim is necessary.

4.4 *RESOLUTION OF CLAIMS AND DISPUTES*

4.4.1 City Engineer will review Claims and take one or more of the following preliminary actions within 30 days of receipt of Claim:

- 4.4.1.1 submit a suggested time to meet and discuss the Claim with City Engineer;
- 4.4.1.2 reject Claim, in whole or in part, stating reasons for rejection;
- 4.4.1.3 recommend approval of the Claim by the other Party;
- 4.4.1.4 suggest a compromise; or
- 4.4.1.5 take other actions as City Engineer deems appropriate to resolve the Claim.

4.4.2 City Engineer may request additional supporting data from claimant. Party making Claim shall, within 10 days after receipt of City Engineer's request, submit additional supporting data requested by City Engineer.

4.4.3 At any time prior to rendering a written decision regarding a Claim, City Engineer may refer Claim to non-binding mediation. If Claim is resolved, City Engineer will prepare and obtain all appropriate documentation. If Claim is not resolved, City Engineer will take receipt of Claim and begin a new review under Section 4.4.

4.4.4 If Claim is not referred to or settled in non-binding mediation, City Engineer may conduct a hearing and will render a written decision, including findings of fact, within 75 days of receipt of Claim, or a time mutually agreed upon by the Parties in writing. City Engineer may notify Surety and request Surety's assistance in resolving Claim. City Engineer's decision is final and binding on the Parties.

4.5 *CONDITION PRECEDENT TO SUIT; WAIVER OF ATTORNEY FEES AND INTEREST*

4.5.1 Neither the City nor Contractor may recover attorney fees for any claim brought in connection with this Contract.

4.5.2 Neither the City nor the Contractor may recover interest for any damages claim brought in connection with this Contract except as allowed by TEXAS LOCAL GOVERNMENT CODE Chapter 2251.

4.6 *INTERIM PAYMENT WAIVER & RELEASE*

4.6.1 In accordance with section 4.3, the Contractor shall use due diligence in the discovery and submission of any Claim against the City related to the Contractor's work.

4.6.2 The Contractor shall submit any Claim to the City not later than the 90th day after the occurrence of the event giving rise to the Claim.

4.6.3 Any failure to timely comply with the requirements of section 4.6.2 waives and releases any Claim when the Contractor submits an application for payment after the 90th day.

4.6.4 This waiver does not cover any retainage. In case of any conflict of law, this language shall be revised to the minimum extent necessary to avoid legal conflict. This waiver is made specifically for the benefit of the City.

ARTICLE 5 - SUBCONTRACTORS AND SUPPLIERS

5.1 *AWARD OF SUBCONTRACTS OTHER CONTRACTS FOR PORTIONS OF THE WORK*

5.1.1 Contractor may not contract with a Subcontractor, Supplier, person, or entity that City Engineer has made a reasonable and timely objection to.

5.1.2 If City Engineer has a reasonable objection to person or entity proposed by Contractor, Contractor shall propose another with whom City Engineer has no reasonable objection.

5.1.3 Contractor shall execute contracts with approved Subcontractors, Suppliers, persons, or entities before the Subcontractors or Suppliers begin work under the Contract. All such contracts must be executed and sent to the OBO Director and Contracting Department within 30 days after the date of the Notice to Proceed and must include provisions set forth in Articles 3 and 5 of this Document.

5.1.4 Contractor shall notify City Engineer in writing of any proposed change of Subcontractor, Supplier, person, or entity previously accepted by the City.

5.1.5 Contractor shall make timely payments to Subcontractors and Suppliers for performance of the Contract. Contractor shall protect, defend, and indemnify the City from any claim or liability arising out of Contractor's failure to make the payments. Disputes relating to payment of Business Enterprise Subcontractors or Suppliers will be submitted to arbitration in same manner as other disputes under Business Enterprise subcontracts. Failure of Contractor to comply with decisions of arbitrator may be determined by City Engineer a material breach leading to termination of the Contract.

5.2 *CONTRACTOR RESPONSIBILITY FOR SUBCONTRACTORS*

5.2.1 Contractor is responsible to the City, as may be required by laws and regulations, for all acts and omissions of Subcontractors, Suppliers, and other persons and organizations performing or furnishing any of the Work under direct or indirect contract with Contractor.

5.2.2 Contractor shall make available to each proposed Subcontractor, prior to execution of subcontract, copies of the Contract to which Subcontractor is bound by this Section 5.2. Contractor shall notify Subcontractor of any terms of proposed subcontract which may be at variance with the Contract.

5.2.3 The City's approval of Subcontractor or Suppliers does not relieve Contractor of its obligation to perform, or to have performed to the full satisfaction of the City, the Work required by the Contract.

5.2.4 Unless there is a contractual relationship between Contractor and a Subcontractor or Supplier to the contrary, Contractor shall withhold no more retainage from Subcontractors or Suppliers than City withholds from Contractor under this Agreement. However, once a Subcontractor or Supplier completes performance, Contractor shall release all retainage to that Subcontractor or Supplier regardless if City continues to retain under this Agreement.

5.2.5 Prior to a Subcontractor or Supplier commencing performance for Contractor, Contractor shall meet with that Subcontractor or Supplier to provide instructions on invoicing procedures, dispute resolution procedures, and statutory rights, such as claim filing procedures under the McGregor Act. Subcontractors and Suppliers must certify to the City Engineer that Contractor has fulfilled the requirements of this Section.

ARTICLE 6 - CONSTRUCTION BY THE CITY OR BY SEPARATE CONTRACTORS

6.1 *THE CITY'S RIGHT TO PERFORM CONSTRUCTION AND TO AWARD SEPARATE CONTRACTS*

6.1.1 The City may perform on-site construction operations related to the Work and as part of the Project with the City's workforce or with separate contractors.

6.2 *COORDINATION*

6.2.1 The City will coordinate activities of the City's workforce and of each separate contractor with work of Contractor, and Contractor shall cooperate with the City and separate contractors.

6.2.1.1 Contractor shall participate with other separate contractors and the City in reviewing their construction schedules when directed to do so by the Project Manager. Contractor shall make revisions to construction schedule and Contract Price deemed

necessary after joint review and mutual agreement. Construction schedules shall then constitute schedules to be used by Contractor, separate contractors, and the City, until subsequently revised.

6.2.2 Contractor shall afford to the City and to separate contractors reasonable opportunity for introduction and storage of their materials and equipment, and for performance of their activities.

6.2.3 If part of Contractor's work depends on proper execution of construction or operations by the City or a separate contractor, Contractor shall, prior to proceeding with that portion of the Work, inspect the other work and promptly report to City Engineer apparent discrepancies or defects in the other construction that would render it unsuitable for the proper execution of the Work. Failure of Contractor to report apparent discrepancies or defects in the other construction shall constitute acknowledgment that the City's or separate contractor's completed or partially completed construction is fit and proper to receive Contractor's work, except as to discrepancies or defects not then reasonably discoverable.

6.3 *MUTUAL RESPONSIBILITY*

6.3.1 The responsible party bears the costs caused by delays, by improperly timed activities, or by nonconforming construction.

6.3.2 Contractor shall promptly remedy damage caused by Contractor to completed or partially completed construction or to property of the City or separate contractor.

6.3.3 Claims or disputes between Contractor and other City contractors, or subcontractors of other City contractors, working on the Project must be submitted to binding arbitration in accordance with Construction Industry Arbitration Rules of the American Arbitration Association upon demand by any party to the dispute or by the City.

6.4 *THE CITY'S RIGHT TO CLEAN UP*

6.4.1 If dispute arises among Contractor, separate contractors, and the City as to responsibility under their respective contracts for maintaining premises and surrounding area free from waste materials and rubbish as described in Section 3.21, the City may clean up and allocate cost among those responsible, as determined by City Engineer.

ARTICLE 7 - CHANGES IN THE WORK

7.1 *CHANGES*

7.1.1 Changes in scope of the Work, subject to limitations in Article 7 and elsewhere in the Contract, may be accomplished without invalidating the Contract, or without notifying Surety by:

- 7.1.1.1 Change Order;
- 7.1.1.2 Work Change Directive; or
- 7.1.1.3 Minor Change in the Work.

7.1.2 The following types of Change Orders require City Council approval:

- 7.1.2.1 a single Change Order that exceeds five percent of Original Contract Price,
- 7.1.2.2 a Change Order which, when added to previous Change Orders, exceeds five percent of Original Contract Price,
- 7.1.2.3 a Change Order, in which the total value of increases outside of the general scope of work approved by City Council, when added to increases outside the general scope of work approved by City Council in previous Change Orders, exceeds 40 percent of the Original Contract Price, even if the net increase to the Original Contract Price is five percent or less.

  In this context, "increase" means an increase in quantity resulting from the addition of locations not within the scope of work approved by City Council, or the addition of types of goods or services not bid as unit price items.

Nothing in this Section is intended to permit an increase of the Contract Price in excess of the limit set out in TEX. LOC. GOV'T CODE ANN. §252.048 or its successor statute.

7.1.3 Contractor shall proceed promptly to execute changes in the Work provided in Modifications, unless otherwise stated in the Modification.

7.2 *WORK CHANGE DIRECTIVES*

7.2.1 A Work Change Directive cannot change Contract Price or Contract Time, but is evidence that the Parties agree that a change, ordered by directive, will be incorporated in a subsequently issued Change Order as to its effect, if any, on Contract Price or Contract Time.

7.2.2 Failure by Contractor to commence work identified in a Work Change Directive within the time specified by City Engineer, or to complete the

work in a reasonable period of time, may be determined by City Engineer to be a material breach of Contract.

7.2.3 A Work Change Directive is used in the absence of total agreement of the terms of a Change Order. Interim payments are made in accordance with Paragraph 9.6.1.

7.2.4 If Contractor signs a Work Change Directive, then Contractor agrees to its terms including adjustment in Contract Price and Contract Time or method for determining them. Agreement by the Parties to adjustments in Contract Price and Contract Time are immediately recorded as a Change Order.

7.2.5 City Engineer, by Work Change Directive, may direct Contractor to take measures as necessary to expedite construction to achieve Date of Substantial Completion on or before expiration of Contract Time. When the Work is expedited solely for convenience of the City and not due to Contractor's failure to prosecute timely completion of the Work, then Contractor is entitled to an adjustment in Contract Price equal to actual costs determined in accordance with Article 7.

7.3 *ADJUSTMENTS IN CONTRACT PRICE*

7.3.1 Adjustments in Contract Price are accomplished by Change Order and are based on one of the following methods:

- 7.3.1.1 mutual acceptance of fixed price, properly itemized and supported by sufficient data to permit evaluation;
- 7.3.1.2 unit prices stated in the Contract or subsequently agreed upon;
- 7.3.1.3 cost to be determined in a manner agreed upon by the Parties and mutually acceptable fixed or percentage fee; or
- 7.3.1.4 as provided in Paragraph 7.3.2.

7.3.2 If Contractor does not agree with a change in Contract Price or Contract Time or the method for adjusting them specified in the Work Change Directive within 21 days from date of the Work Change Directive's issuance, method and adjustment are determined by City Engineer. If Project Manager or Contractor disagree with City Engineer's determination they then may file a Claim in accordance with Section 4.4.

7.3.2.1 If City Engineer determines a method and adjustment in Contract Price under Paragraph 7.3.2, Contractor shall provide, in a form as City Engineer may prescribe, appropriate supporting data for items submitted under Paragraph 7.3.2. Failure to submit the data within 21 days of request for the data by City Engineer shall constitute waiver of a Claim.

7.3.2.2 Unless otherwise provided in the Contract, costs for the purposes of this Paragraph 7.3.2 are limited to the following:

- 7.3.2.2.1 costs of labor, including labor burden as stated below for social security, unemployment insurance, customary and usual fringe benefits required by agreement or custom, and Workers' Compensation insurance;
  - 7.3.2.2..1.1 the maximum labor burden applied to costs of labor for changes in the Work is 55 percent;
- 7.3.2.2.2 costs of materials, supplies, and equipment, including cost of transportation, whether incorporated or consumed;
- 7.3.2.2.3 rental costs of machinery and equipment, exclusive of hand tools, whether rented from Contractor or others, with prior approval of City Engineer;
- 7.3.2.2.4 costs of premiums for Bonds and insurance and permit fees related to the change in the Work;
- 7.3.2.2.5 additional costs of direct supervision of work and field office personnel directly attributable to the change; and
- 7.3.2.2.6 allowances for overhead and profit as stated below.
  - 7.3.2.2.6.1 the maximum allowances for overhead and profit on increases due to Change Orders:
  - 7.3.2.2.6.2 for changes in the Work performed by Contractor and Subcontractors, allowance for overhead and profit are applied to an amount equal to cost of all additions less cost of all deletions to the Work. Allowance for overhead to Contractor and first tier Subcontractors on changes performed by Subcontractors are applied to an amount equal to the sum of all increases to the Work by applicable Subcontractors.

	Overhead	Profit
to Contractor for change in the Work performed by Subcontractors:	10 percent	0 percent
to first tier Subcontractors for change in the Work performed by its Subcontractors:	10 percent	0 percent
to Contractor and Subcontractor for change in the Work performed by their respective firms:	10 percent	5 percent

7.3.3 If the City deletes or makes a change, which results in a net decrease in Contract Price, the City is entitled to a credit calculated in accordance with Paragraphs 7.3.1 and 7.3.2 and Subparagraphs 7.3.2.1, and 7.3.2.2.1 through 7.3.2.2.5. When both additions and credits covering related work or substitutions are involved in a change, allowance for overhead and profit is figured on the basis of a net increase, if any, with respect to that change in accordance with Subparagraph 7.3.2.2.6.

7.3.4 When Contractor agrees with the determination made by City Engineer concerning adjustments in Contract Price and Contract Time, or the Parties otherwise reach agreement upon the adjustments, the agreement will be immediately recorded by Change Order.

7.4 *MINOR CHANGES IN THE WORK*

7.4.1 A Minor Change in Work is binding on the Parties. Contractor shall acknowledge, in a written form acceptable to City Engineer, that there is no change in Contract Time or Contract Price and shall carry out the written orders promptly.

ARTICLE 8 - TIME

8.1 *PROGRESS AND COMPLETION*

8.1.1 Time is of the essence in the Contract. By executing the Contract, Contractor agrees that Contract Time is a reasonable period for performing the Work.

8.1.2 *Computation of Time:* In computing any period of time prescribed or allowed by the General Conditions, the day of the act, event, or default after which designated period of time begins to run is not to be included. Last day of the period so computed is to be included, unless it is a Sunday or Legal Holiday, in which event the period runs until end of next day which is not a Sunday or Legal Holiday. Sundays and Legal Holidays are considered to be days and are to be included in all other time computations relative to Contract Time.

8.1.3 Contractor may not commence the Work prior to the effective date of insurance and Bonds required by Article 11.

8.1.4 Contractor shall proceed expeditiously and without interruption, with adequate forces, and shall achieve Date of Substantial Completion within Contract Time.

8.1.5 Should progress of the Work fall behind construction schedule, except for reasons stated in Paragraph 8.2.1, Contractor shall promptly submit at the request of Project Manager, updated construction schedule to City Engineer for approval. Contractor's failure to submit updated schedule may, at City Engineer's discretion, constitute a material breach of the Contract. Contractor shall take action necessary to restore progress by working the hours, including night shifts and lawful overtime operations as necessary, to achieve Date of Substantial Completion within Contract Time.

8.1.6 Except in connection with safety or protection of persons or the Work or property at the site or adjacent to the site, and except as otherwise indicated in the Contract, all the Work at the site will be performed Monday through Saturday between the hours of 7:00 a.m. and 7:00 p.m. Contractor may not perform work between 7:00 p.m. and 7:00 a.m., on a Sunday, or on a Legal Holiday, without giving City Engineer 24-hour prior written notice and receiving written consent of City Engineer.

8.2 *DELAYS AND EXTENSIONS OF TIME*

8.2.1 Contractor may request extension of Contract Time for a delay in performance of work that arises from causes beyond control and without fault or negligence of Contractor. Examples of these causes are:

- 8.2.1.1 acts of God or of the public enemy;
- 8.2.1.2 acts of government in its sovereign capacity;
- 8.2.1.3 fires;
- 8.2.1.4 floods;
- 8.2.1.5 epidemics;
- 8.2.1.6 quarantine restrictions;
- 8.2.1.7 strikes;
- 8.2.1.8 freight embargoes;
- 8.2.1.9 unusually severe weather; and
- 8.2.1.10 discovery of Pollutants or Pollutant Facilities at the site.

8.2.2 For any reason other than those listed in Section 4.3.6.2, if the Contractor's work is delayed in any manner or respect, the Contractor shall have no claim for damages and shall have no right of additional compensation from the City by reason of any delay or increased expense to the Contractor's work, except for an extension of time as provided in this provision.

8.2.3 Contractor may request an extension of Contract Time for delay only if:

8.2.3.1 delay is caused by failure of Subcontractor or Supplier to perform or make progress; and

8.2.3.2 cause of failure is beyond control of both Contractor and Subcontractor or Supplier.

8.2.4 Claims relating to Contract Time must be made in accordance with Paragraph 4.3.7.

8.2.5 Claims for extending or shortening Contract Time are based on written notice promptly delivered by the Party making Claim to other Party. Claim must accurately describe occurrence generating Claim, and a statement of probable effect on progress of the Work.

8.2.6 Claims for extension of Contract Time are considered only when a Claim is filed within the time limits stated in Paragraph 4.3.3.

8.2.6.1 Notwithstanding paragraph 4.3.3, an extension of time for delays under this paragraph may be granted only upon written application by the Contractor within 48 hours from the claimed delay.

8.2.7 Written notice of Claim must be accompanied by claimant's written statement that adjustment claimed is entire adjustment to which claimant is entitled as a result of the occurrence of the event. When the Parties cannot agree, Claims for adjustment in Contract Time are determined by City Engineer in accordance with Section 4.4.

8.2.8 Adjustments to Contract Time are accomplished by Change Order.

ARTICLE 9 - PAYMENTS AND COMPLETION

9.1 *UNIT PRICE WORK*

9.1.1 Where the Contract provides that all or part of the Work is based on Unit Prices, the Original Contract Price includes, for all Unit Price work, an amount equal to the sum of Unit Prices times Unit Price Quantities for each separately identified item of Unit Price work.

9.1.2 Each Unit Price includes an amount to cover Contractor's overhead and profit for each separately identified item.

9.1.3 The Contractor may not make a Claim against the City for excess or deficiency in Unit Price Quantities provided in the Contract, except as provided in Subparagraph 9.1.4. Payment at the prices stated in the Contract is in full for the completed work. Contractor is not entitled to additional payment for materials, supplies, labor, tools, machinery and all other expenditures incidental to satisfactory completion of the Work.

9.1.4 City Engineer may increase or decrease quantities of the Work within limitations stated in Paragraph 7.1.2. Contractor is entitled to payment for actual quantities of items provided at Unit Prices set forth in the Contract.

9.1.5 Where the final quantity of work performed by Contractor on Major Unit Price Work item differs by more than 25 percent from quantity of the item stated in the Contract, a Party may request an adjustment in Unit Price, for the portion that differs by more than 25 percent, by a Change Order under Section 7.3.

9.2 *ESTIMATES FOR PAYMENT, UNIT PRICE WORK*

9.2.1 Following the day of each month indicated in the Contract, Project Manager will prepare a Certificate for Payment for the preceding monthly period based on estimated units of work completed. Prior to preparing Certificate of Payment, Contractor shall have submitted to City Engineer, on a form approved by the Director of the Office of Business Opportunity, evidence satisfactory to the City Engineer of payments made to Subcontractors and Suppliers for the month preceding the month for which the Certificate for Payment is prepared, including evidence of electronic submission of certified payrolls.

9.2.2 Before final completion, City Engineer will review and confirm with Contractor the actual final installed Unit Price quantities. City Engineer's determination of actual final installed Unit Price quantities will be included in the final Certificate for Payment and any previous underpayments and overpayments will be reconciled with the actual final Unit Price quantities. Contractor shall file written notice of intent to appeal, if any, City Engineer's

determination within 10 days of receipt of final Certificate for Payment. Upon expiration of the 10-day period, City Engineer's decision is final and binding on the Parties. If Contractor submits notice within the 10-day period, Contractor shall submit a Claim in accordance with Section 4.4.

9.3 *STIPULATED PRICE WORK*

9.3.1 For work contracted on a Stipulated Price basis, 10 days before submittal of first Application for Payment, Contractor shall submit to City Engineer a Schedule of Values allocated to various portions of the Work, prepared in the form and supported by the data as City Engineer may require to substantiate its accuracy. This schedule, as approved by City Engineer, is used as a basis for approval of Contractor's Applications for Payment.

9.4 *APPLICATIONS FOR PAYMENT, STIPULATED PRICE WORK*

9.4.1 For work contracted on a Stipulated Price basis, Contractor shall submit Applications for Payment to City Engineer each month on a form acceptable to City Engineer in accordance with Schedule of Values. Application must indicate percentages of completion of each portion of the Work listed in Schedule of Values as of the end of the period covered by the Application for Payment.

9.4.2 Applications for Payment must be supported by substantiating data as City Engineer may require and must reflect retainages as provided below. Evidence satisfactory to the City Engineer of payments made to Subcontractors and Suppliers for the month preceding the month for which the Application for Payment is submitted must accompany each Application for Payment on a form approved by the Director of the Office of Business Opportunity. Evidence of electronic submission of certified payrolls must be included. Application must be sworn and notarized.

9.5 *CERTIFICATES FOR PAYMENT*

9.5.1 City Engineer will, within 10 days after the date specified in the Contract for Unit Price work, or upon receipt of Contractor's Application for Payment for Stipulated Price work, issue a Certificate for Payment for work based on amount which City Engineer determines is properly due, with copy to Contractor.

9.5.2 Unless otherwise provided in the Contract, payment for completed work and for properly stored Products is conditioned upon compliance with procedures satisfactory to City Engineer to protect the City's interests. Procedures will include applicable insurance, storage, and transportation to site for materials and equipment stored off-site. Contractor is responsible for maintaining materials and equipment until Date of Substantial Completion.

9.5.3 Contractor shall document its use of Ultra Low Sulfur Diesel Fuel by providing invoices and receipts evidencing Contractor's use.

9.6 *COMPUTATIONS OF CERTIFICATES FOR PAYMENT*

9.6.1 Subject to the provisions of the Contract, the amount of each Certificate for Payment is calculated as follows:

- 9.6.1.1 that portion of Contract Price allocated to completed work as determined by:
  - 9.6.1.1.1 multiplying the percentage of completion of each portion of the Work listed in the Schedule of Values by the value of that portion of the Work, or
  - 9.6.1.1.2 multiplying Unit Price quantities Installed times the Unit Prices listed in the Contract;
- 9.6.1.2 plus progress payments for completed work that has been properly authorized by Modifications;
- 9.6.1.3 less retainage of five percent;
- 9.6.1.4 plus actual costs, properly substantiated by certified copies of invoices and freight bills, of non-perishable materials and equipment delivered and properly stored, if approved in advance by Project Manager, less 15 percent;
- 9.6.1.5 less any previous payments by the City.

9.7 *DECISIONS TO WITHHOLD CERTIFICATION*

9.7.1 City Engineer may decline to certify payment and may withhold payment in whole or in part to the extent reasonably necessary to protect the City if, in City Engineer's opinion, there is reason to believe that:

- 9.7.1.1 nonconforming work has not been remedied;
- 9.7.1.2 the Work cannot be completed for unpaid balance of Contract Price;
- 9.7.1.3 there is damage to the City or another contractor;
- 9.7.1.4 the Work will not be completed within Contract Time and that unpaid balance

will not be adequate to cover actual and liquidated damages;

9.7.1.5 probable evidence that third party claims will be filed in court, in arbitration, or otherwise;

9.7.1.6 Contractor has failed to make payments to Subcontractors or Suppliers for labor, material, or equipment; or

9.7.1.7 Contractor has persistently failed to carry out work in accordance with the Contract.

9.7.1.8 Contractor has not paid Subcontractors or Suppliers because of a payment dispute; or

9.7.1.9 Contractor has failed to provide satisfactory evidence described in Paragraphs 9.2.1, 9.4.2, and 9.8.2.

9.7.2 When the above reasons for withholding certification are removed, certification will be made for amounts previously withheld.

9.7.3 City Engineer may decline to certify payment and may withhold request for payment in whole or in part upon failure of Contractor to submit initial construction schedule or monthly schedule updates, as required in Paragraphs 3.15.1 and 3.15.3.

9.8 *PROGRESS PAYMENTS*

9.8.1 The City will make payment, in an amount certified by City Engineer, within 20 days after City Engineer has issued a Certificate for Payment.

9.8.2 The City has no obligation to pay or to facilitate the payment to a Subcontractor or Supplier, except as may otherwise be required by law. Contractor shall comply with the prompt payment requirements of Chapter 2251 of the Government Code. State law requires payment of Subcontractors and Suppliers by Contractor within 7 calendar days of Contractor's receipt of payment from the City, unless there is a payment dispute between Contractor and a Subcontractor or Supplier evidenced on a form approved by the Director of Mayor's Office of Business Opportunity and submitted to the City Engineer each month with Application for Payment or Estimate for Payment. **CONTRACTOR SHALL DEFEND AND INDEMNIFY THE CITY FROM ANY CLAIMS OR LIABILITY ARISING OUT OF CONTRACTOR'S FAILURE TO MAKE THESE PAYMENTS.**

9.8.2.1 The City may, upon request and at the discretion of City Engineer, furnish to Subcontractor information regarding percentages of completion or the amounts applied for by Contractor, and action taken thereon by the City because of work done by the Subcontractor.

9.8.2.2 Contractor shall prepare and submit to City Engineer a Certification of Payment to Subcontractors and Suppliers form to be attached to each monthly Estimate for Payment or Application for Payment.

9.8.3 A Certificate for Payment, a progress payment, or partial or entire use or occupancy of the Work by the City, does not constitute acceptance of work which is not in accordance with the Contract.

9.9 *DATE OF SUBSTANTIAL COMPLETION*

9.9.1 When Contractor considers the Work, or a portion thereof designated by City Engineer, to be substantially complete, Contractor shall prepare and submit to Project Manager a comprehensive punch list of items to be completed or corrected. Failure to include an item on the punch list does not alter the responsibility of Contractor to comply with the Contract.

9.9.1.1 By submitting the punch list to Project Manager, Contractor represents that work on the punch list will be completed within the time provided for in Subparagraph 9.9.4.3.

9.9.2 Upon receipt of Contractor's punch list, Project Manager will inspect the Work, or designated portion thereof, to verify that the punch list contains all items needing completion or correction. If Project Manager's inspection discloses items not on Contractor's punch list, the items must be added to the punch list of items to be completed or corrected. If Project Manager's inspection reveals that Contractor is not yet substantially complete, Contractor shall complete or correct the deficiencies and request another inspection by Project Manager. The City may recover the costs of re-inspection from Contractor.

9.9.3 Prior to City Engineer's issuing a Certificate of Substantial Completion, Contractor shall also provide:

9.9.3.1 Certificate of Occupancy for new construction, or Certificate of Compliance for remodeled work, as applicable, and

9.9.3.2 compliance with Texas Accessibility Standards through state inspection of the Work, if required. If Contractor calls for inspection in a timely manner and the inspection is delayed through no fault of Contractor, and City Engineer so confirms, City Engineer may, upon request by Contractor, add the inspection to the punch list in Paragraph 9.9.2 and issue a Certificate of Substantial Completion.

9.9.4 When the Work, or designated portion thereof, is determined by City Engineer to be sufficiently complete in accordance with the Contract so the City can occupy or utilize the Work, or designated portion thereof, for the purpose for which it is intended, City Engineer will prepare a Certificate of Substantial Completion that incorporates the punch list in Paragraph 9.9.2 and establishes:

9.9.4.1 Date of Substantial Completion;

9.9.4.2 responsibilities of the Parties for security, maintenance, heating, ventilating and air conditioning, utilities, damage to the Work, and insurance; and

9.9.4.3 fixed time within which Contractor shall complete all items on punch list of items to be corrected accompanying the certificate.

9.9.5 Warranties required by the Contract shall commence on the Date of Substantial Completion unless otherwise provided by City Engineer in Certificate of Substantial Completion. Warranties may not commence on items not substantially completed.

9.9.6 After Date of Substantial Completion and upon application by Contractor and approval by City Engineer, the City may make payment, reflecting adjustment in retainage, if any, as follows:

9.9.6.1 with the consent of Surety, the City may increase payment to Contractor to 96 percent of Contract Price, less value of items to be completed and accrued liquidated damages.

9.9.7 Contractor shall complete or correct the items in Paragraph 9.9.2 within the time period set out in the Certificate of Substantial Completion. If Contractor fails to do so, the City may issue a Notice of Noncompliance and proceed according to Section 2.5.

9.10 *PARTIAL OCCUPANCY OR USE*

9.10.1 The City may occupy or use any completed or partially completed portion of the Work at any stage, provided the occupancy or use is consented to by Contractor and Contractor's insurer and authorized by public authorities having jurisdiction over the Work. Consent of Contractor to partial occupancy or use may not be unreasonably withheld.

9.10.2 Immediately prior to the partial occupancy or use, Project Manager and Contractor shall jointly inspect the area to be occupied or portion of the Work to be used to determine and record condition of the Work.

9.10.3 Partial occupancy or use of a portion of the Work does not constitute acceptance of work not in compliance with requirements of the Contract.

9.11 *FINAL COMPLETION AND FINAL PAYMENT*

9.11.1 Contractor shall review the Contract and inspect the Work prior to Contractor notification to City Engineer that the Work is complete and ready for final inspection. Contractor shall submit affidavit that the Work has been inspected and that the Work is complete in accordance with requirements of the Contract.

9.11.2 Project Manager will make final inspection within 15 days after receipt of Contractor's written notice that the Work is ready for final inspection and acceptance. If Project Manager finds the Work has been completed in accordance with the Contract, Contractor shall submit items set out in Paragraph 9.11.4 and, for stipulated price contracts, a final Application for Payment. City Engineer will, within 10 days, issue Certificate of Final Completion stating that to the best of City Engineer's knowledge, information, and belief, the Work has been completed in accordance with the Contract, and will recommend acceptance of the Work by City Council.

9.11.3 Should work be found not in compliance with requirements of the Contract, City Engineer will notify Contractor in writing of items of noncompliance. Upon inspection and acceptance of the corrections by Project Manager, compliance with all procedures of Paragraph 9.11.2, and Contractor's submission of the items set out in Paragraph 9.11.4, the City Engineer will issue Certificate of Final Completion to Contractor as provided in Paragraph 9.11.2.

9.11.4 Contractor shall submit the following items to City Engineer before City Engineer will issue a Certificate of Final Completion:

9.11.4.1 affidavit that payrolls, invoices for materials and equipment, and other indebtedness of Contractor connected

with the Work, less amounts withheld by the City, have been paid or otherwise satisfied. If required by City Engineer, Contractor shall submit further proof including waiver or release of lien or claims from laborers or Suppliers of Products;

9.11.4.2 certificate evidencing that insurance required by the Contract to remain in force after final payment is currently in effect, will not be canceled or materially changed until at least 30 days written notice has been given to the City;

9.11.4.3 written statement that Contractor knows of no substantial reason that insurance will not be renewable to cover correction and warranty period required by the Contract;

9.11.4.4 consent of Surety to final payment; and

9.11.4.5 copies of record documents, maintenance manuals, tests, inspections, and approvals.

Upon City Engineer's issuance of a Certificate of Final Completion, Contractor may request increase in payment to 99 percent of Contract Price, less accrued liquidated damages.

9.11.5 If Contractor fails to submit required items in Paragraph 9.11.4 within 10 days of Project Manager's inspection of the Work under Paragraph 9.11.2 or Paragraph 9.11.3, City Engineer may, but is not obligated to:

9.11.5.1 deduct liquidated damages accrued from monies held;

9.11.5.2 proceed to City Council for acceptance of the Work, minus some or all of the items Contractor fails to submit under Paragraph 9.11.4; and,

9.11.5.3 upon acceptance by City Council of the portion of the Work completed, make final payment as set out in Paragraph 9.11.8.

9.11.6 If final completion is materially delayed through no fault of Contractor, or by issuance of Change Orders affecting date of final completion, and City Engineer so confirms, the City may, upon application by Contractor and certification by City Engineer, and without terminating the Contract, make payment of balance due for that portion of the Work fully completed and accepted.

9.11.7 If remaining balance due for work not corrected is less than retainage stipulated in the Contract, Contractor shall submit to City Engineer written consent of Surety to payment of balance due for that portion of the Work fully completed and accepted, prior to certification of the payment. The payment is made under terms governing final payment, except that it does not constitute waiver of Claims.

9.11.8 The City will make final payment to Contractor within 30 days after acceptance of the Work by City Council, subject to limitations, if any, as stated in the Contract.

9.11.9 Acceptance of final payment by Contractor shall constitute a waiver of all Claims, whether known or unknown, by Contractor, except those previously made in writing and identified by Contractor as unsettled at time of final Application for Payment.

9.12 *LIQUIDATED DAMAGES*

9.12.1 Contractor, Surety, and the City agree that failure to complete the Work within Contract Time will cause damages to the City and that actual damages from harm are difficult to estimate accurately. Therefore, Contractor, Surety, and the City agree that Contractor and Surety are liable for and shall pay to the City the amount stipulated in Supplementary Conditions as liquidated damages, and that the amount of damages fixed therein is a reasonable forecast of just compensation for harm to the City resulting from Contractor's failure to complete the Work within Contract Time. The amount stipulated will be paid for each day of delay beyond Contract Time until Date of Substantial Completion.

9.12.2 Contractor shall pay the City an amount equal to $1,200.00 per diesel operating vehicle or piece of motorized equipment per incident of high sulfur diesel fuel usage.

ARTICLE 10 - SAFETY PRECAUTIONS

10.1 *SAFETY PROGRAMS*

10.1.1 Contractor is responsible for initiating, maintaining, and supervising all safety precautions and programs in connection with performance of the Contract. Contractor shall submit a safety program to City Engineer prior to mobilizing for the Work, and is solely responsible for safety, efficiency, and adequacy of ways, means, and methods, and for damage which might result from failure or improper construction, maintenance, or operation performed by Contractor.

10.2 *POLLUTANTS AND POLLUTANT FACILITIES*

10.2.1 If Contractor encounters material on-site which it reasonably believes to be a Pollutant or facilities which it reasonably believes to be a Pollutant Facility, Contractor shall immediately stop work in affected area and immediately notify City Engineer, confirming the notice thereafter in writing.

10.2.2 If City Engineer determines that the material is a Pollutant or facility is a Pollutant Facility, work in affected area may not be resumed except by Modification, and only if the work would not violate applicable laws or regulations.

10.2.3 If City Engineer determines that the material is not a Pollutant or a facility is not a Pollutant Facility, work in affected area will be resumed upon issuance of a Modification.

10.2.4 Contractor is not required to perform, unless authorized by Change Order, work relating to Pollutants or Pollutant Facilities except for that work relating to Pollutants or Pollutant Facilities specified in the Contract.

10.3 *SAFETY OF THE ENVIRONMENT, PERSONS, AND PROPERTY*

10.3.1 Contractor shall take reasonable precautions for safety and shall provide reasonable protection to prevent damage, injury, or loss from all causes, to:

10.3.1.1 employees performing work on-site, and other persons who may be affected thereby;

10.3.1.2 work, including Products to be incorporated into the Work, whether in proper storage, under control of Contractor or Subcontractor; and

10.3.1.3 other property at or adjacent to the site, such as trees, shrubs, lawns, walks, pavements, roadways, structures, utilities, and Underground Facilities not designated for removal or replacement in course of construction.

10.3.2 Contractor shall give notices and comply with applicable laws, ordinances, rules, regulations, and lawful orders of public authorities bearing on safety of persons, property, or environment.

10.3.2.1 Contractor shall comply with requirements of Underground Facility Damage Prevention and Safety Act TEX. UTIL. CODE ANN. Ch. 251 (Vernon Supp. 2002).

10.3.2.2 Contractor shall comply with all safety rules and regulations of the Federal Occupational Health and Safety Act of 1970 and subsequent amendments (OSHA).

10.3.3 Contractor shall erect and maintain, as required by existing conditions and performance of the Contract, reasonable safeguards for safety and protection of persons and property, including posting danger signs and other warnings against hazards, promulgating safety regulations, and notifying owners and users of adjacent sites and utilities.

10.3.4 Contractor shall designate responsible member of Contractor's organization at site whose duty is prevention of accidents. This person will be Contractor's Superintendent unless otherwise designated by Contractor in writing to City Engineer.

10.3.5 Contractor shall prevent windblown dust and may not burn or bury trash debris or waste products on-site. Contractor shall prevent environmental pollution, including but not limited to particulates, gases and noise, as a result of the Work.

10.3.6 When use or storage of hazardous materials or equipment, or unusual methods are necessary for execution of the Work, Contractor shall exercise utmost care and carry on the activities under supervision of properly qualified personnel.

10.3.7 Contractor shall promptly remedy damage and loss to property referred to in Subparagraphs 10.3.1.2 and 10.3.1.3, caused in whole or in part by Contractor, or Subcontractors, which is not covered by insurance required by the Contract. Contractor is not required to remedy damage or loss attributable to the City, Design Consultant, or other contractors.

10.4 *EMERGENCIES*

10.4.1 In emergencies affecting safety of persons or property, Contractor shall act at Contractor's discretion to prevent imminent damage, injury, or loss. Additional compensation or extension of time claimed by Contractor because of emergencies are determined as provided in Article 7.

ARTICLE 11 - INSURANCE AND BONDS

11.1 *GENERAL INSURANCE REQUIREMENTS*

11.1.1 With no intent to limit Contractor's liability under indemnification provisions set forth in Paragraphs 3.25 and 3.26, Contractor shall provide and maintain in full force and effect during term of the Contract and all extensions and amendments thereto, at least the following insurance and available limits of liability.

11.1.2 If any of the following insurance is written as "claims made" coverage and the City is required to be carried as additional insured, then Contractor's insurance shall include a two-year extended discovery period after last date that Contractor provides any work under the Contract.

11.1.3 Aggregate amounts of coverage, for purposes of the Contract, are agreed to be amounts of coverage available during fixed 12-month policy period.

11.2 *INSURANCE TO BE PROVIDED BY CONTRACTOR*

11.2.1 *Risks and Limits of Liability:* Contractor shall maintain the insurance coverages in the listed amounts, as set out in Table 1.

11.2.2 If Limit of Liability for Excess Coverage is $2,000,000 or more, Limit of Liability for Employer's Liability may be reduced to $500,000.

11.2.3 *Insurance Coverage*: At all times during the term of this Contract and any extensions or renewals, Contractor shall provide and maintain insurance coverage that meets the Contract requirements. Prior to beginning performance under the Contract, at any time upon the Director's request, or each time coverage is renewed or updated, Contractor shall furnish to the Director current certificates of insurance, endorsements, all policies, or other policy documents evidencing adequate coverage, as necessary. Contractor shall be responsible for and pay (a) all premiums and (b) any claims or losses to the extent of any deductible amounts. Contractor waives any claim it may have for premiums or deductibles against the City, its officers, agents, or employees. Contractor shall also require all subcontractors or consultants whose subcontracts exceed $100,000 to provide proof of insurance coverage meeting all requirements stated above except amount. The amount must be commensurate with the amount of the subcontract, but no less than $500,000 per claim.

11.2.4 *Form of insurance*: The form of the insurance shall be approved by the Director and the City Attorney; such approval (or lack thereof) shall never (a) excuse non-compliance with the terms of this Section, or (b) waive or estop the City from asserting its rights to terminate this Contract. The policy issuer shall (1) have a Certificate of Authority to transact insurance business in Texas, or (2) be an eligible non-admitted insurer in the State of Texas and have a Best's rating of at least B+, and a Best's Financial Size Category of Class VI or better, according to the most current Best's Key Rating Guide. Each insurer is subject to approval by City Engineer in City Engineer's sole discretion as to conformance with these requirements.

11.2.5 *Required Coverage*: The City shall be an Additional Insured under this Contract, and all policies except Professional Liability and Worker's Compensation must name the City as an Additional Insured. Contactor waives any claim or right of subrogation to recover against the City, its officers, agents, or employees, and each of Contractor's insurance policies except professional liability must contain coverage waiving such claim. Each policy, except Workers' Compensation and Professional Liability, must also contain an endorsement that the policy is primary to any other insurance available to the Additional Insured with respect to claims arising under this Contract. If professional liability coverage is written on a "claims made" basis, Contractor shall also provide proof of renewal each year for two years after substantial completion of the Project, or in the alternative: evidence of extended reporting period coverage for a period of two years after substantial completion, or a project liability policy for the Project covered by this Contract with a duration of two years after substantial completion.

11.2.6 *Deductibles:* Contractor assumes and bears any claims or losses to extent of deductible amounts and waives any claim it may ever have for same against the City, its officers, agents, or employees.

11.2.7 *Notice*: **CONTRACTOR SHALL GIVE 30 DAYS' ADVANCE WRITTEN NOTICE TO THE DIRECTOR IF ANY OF ITS INSURANCE POLICIES ARE CANCELED OR NON-RENEWED**. Within the 30-day period, Contractor shall provide other suitable policies in order to maintain the required coverage. If Contractor does not comply with this requirement, the Director, at his or her sole discretion, may immediately suspend Contractor from any further performance under this Agreement and begin procedures to terminate for default.

11.2.8 *Subrogation:* Contractor waives any claim or right of subrogation to recover against the City, its officers, agents, or employees. Each policy,

except professional liability, must contain an endorsement waiving such claim.

11.2.9 *Endorsement of Primary Insurance:* Each policy, except Workers' Compensation policies, must contain an endorsement that the policy is primary insurance to any other insurance available to additional insured with respect to claims arising hereunder.

11.2.10 *Liability for Premium:* Contractor is solely responsible for payment of all insurance premium requirements hereunder and the City is not obligated to pay any premiums.

11.2.11 *Additional Requirements for Workers' Compensation Insurance Coverage:* Contractor shall, in addition to meeting the obligations set forth in Table 1, maintain throughout the term of the Contract Workers' Compensation coverage as required by statute, and Contractor shall specifically comply with requirements set forth in Paragraph 11.2.10. The definitions set out below shall apply only for purposes of this Paragraph 11.2.10.

11.2.12 Definitions:

11.2.12.1 *Certificate of Coverage:* A copy of certificate of insurance, or coverage agreement (TWCC-81, TWCC-82, TWCC-83, or TWCC-84), showing statutory Workers' Compensation insurance coverage for Contractor's, Subcontractor's, or Supplier's employees providing services for the duration of the Contract.

11.2.12.2 *Duration of the Work:* Includes the time from Date of Commencement of the Work until Contractor's work under the Contract has been completed and accepted by City Council.

11.2.12.3 *Persons providing services for the Work (Subcontractor in Texas Labor Code § 406.096):* includes all persons or entities performing all or part of services Contractor has undertaken to perform on the Work, regardless of whether that person contracted directly with Contractor and regardless of whether that person has employees. This includes, without limitation, independent contractors, subcontractors, leasing companies, motor carriers, owner-operators, employees of the entity, or employees of entity which furnishes persons to provide services on the Work. Services include, without limitation, providing, hauling, or delivering equipment or materials, or providing labor, transportation, or other service related to the Work. Services do not include activities unrelated to the Work, such as food/beverage vendors, office supply deliveries, and delivery of portable toilets.

11.2.13 Contractor shall provide coverage, based on proper reporting of classification codes and payroll amounts and filing of coverage agreements, which meets the statutory requirements of TEX. LAB. CODE ANN., Section 401.011(44) for employees of Contractor providing services on the Work, for duration of the Work.

11.2.14 Contractor shall provide a Certificate of Coverage to the City prior to being awarded the Contract.

11.2.15 If coverage period shown on Contractor's original Certificate of Coverage ends during duration of the Work, Contractor shall file new Certificate of Coverage with the City showing that coverage has been extended.

11.2.16 Contractor shall obtain from each person providing services on the Work, and provide to City Engineer:

11.2.16.1 Certificate of Coverage, prior to that person beginning work on the Work, so the City will have on file Certificates of Coverage showing coverage for all persons providing services on the Work; and

11.2.16.2 no later than seven days after receipt by Contractor, new Certificate of Coverage showing extension of coverage, if coverage period shown on current Certificate of Coverage ends during the duration of the Work.

11.2.17 Contractor shall retain all required Certificates of Coverage for the duration of the Work and for one year thereafter.

11.2.18 Contractor shall notify City Engineer in writing by certified mail or personal delivery, within 10 days after Contractor knew or should have known, of any change that materially affects provision of coverage of any person providing services on the Work.

11.2.19 Contractor shall post on-site a notice, in text, form and manner prescribed by Texas Workers'

Compensation Commission, informing all persons providing services on the Work that they are required to be covered, and stating how person may verify coverage and report lack of coverage.

11.2.20 Contractor shall contractually require each person with whom it contracts to provide services on the Work to:

11.2.20.1 provide coverage, based on proper reporting of classification codes, payroll amounts and filing of any coverage agreements, which meets statutory requirements of TEX. LAB. CODE ANN., Section 401.011(44) for all its employees providing services on the Work, for the duration of the Work;

11.2.20.2 provide to Contractor, prior to that person's beginning work on the Work, a Certificate of Coverage showing that coverage is being provided for all employees of the person providing services on the Work, for the duration of the Work;

11.2.20.3 provide Contractor, prior to the end of the coverage period, a new Certificate of Coverage showing extension of coverage, if the coverage period shown on the current Certificate of Coverage ends during the duration of the Work;

11.2.20.4 obtain from each other person with whom it contracts, and provide to Contractor: (1) Certificate of Coverage, prior to other person's beginning work on the Work; and (2) new Certificate of Coverage showing extension of coverage, prior to end of coverage period, if coverage period shown on the current Certificate of Coverage ends during duration of the Work.

11.2.20.5 retain all required Certificates of Coverage on file for the duration of the Work and for one year thereafter;

11.2.20.6 notify City Engineer in writing by certified mail or personal delivery within 10 days after person knew, or should have known, of change that materially affects provision of coverage of any person providing services on the Work; and

11.2.20.7 contractually require each person with whom it contracts to perform as required by Paragraphs 11.2.10.1 through 11.2.10.7, with Certificates of Coverage to be provided to person for whom they are providing services.

11.2.21 By signing the Contract or providing or causing to be provided a Certificate of Coverage, Contractor is representing to the City that all employees of Contractor who will provide services on the Work will be covered by Workers' Compensation coverage for the duration of the Work, that coverage will be based on proper reporting of classification codes and payroll amounts, and that all coverage agreements will be filed with appropriate insurance carrier. Contractor is not allowed to self-insure Workers' Compensation. Contractor may be subject to administrative penalties, criminal penalties, civil penalties, or other civil actions for providing false or misleading information.

11.2.22 Contractor's failure to comply with Paragraph 11.2.10 is a breach of the Contract by Contractor, which entitles the City to declare the Contract void if Contractor does not remedy breach within 10 days after receipt of notice of breach from City Engineer.

11.2.23 *Subcontractor Insurance Requirements:* Contractor shall require Subcontractors and Suppliers to obtain Commercial General Liability, Workers' Compensation, Employer's Liability and Automobile Liability coverage that meets all the requirements of Paragraph 11.2. The amount must be commensurate with the amount of the subcontract, but not less than $500,000 per occurrence. Contractor shall require all Subcontractors with whom it contracts directly, whose subcontracts exceed $100,000, to provide proof of Commercial General Liability and Automobile Liability insurance coverage meeting the above requirements. Contractor shall comply with all requirements set out under Paragraph 11.2.10 as to Workers' Compensation Insurance for all Subcontractors and Suppliers.

REQUIRED COVERAGE

(Coverage)	(Limit of Liability)
.1 Workers' Compensation	• Statutory Limits for Workers' Compensation
.2 Employer's Liability	• Bodily Injury by Accident $1,000,000 (each accident) • Bodily Injury by Disease $1,000,000 (policy limit) • Bodily Injury by Disease $1,000,000 (each employee)
.3 Commercial General Liability: Including Contractor's Protective, Broad Form Property Damage, Contractual Liability, Explosion, Underground and Collapse, Bodily Injury, Personal Injury, Products, and Completed Operations (for a period of one year following completion of the Work).	• Combined single limit of $1,000,000 (each occurrence), subject to general aggregate of $1,000,000; • Products and Completed Operations $1,000,000 aggregate.
.4 Owner's and Contractor's Protective Liability	• $1,000,000 combined single limit each Occurrence/ aggregate
.5 Installation Floater (Unless alternative coverage approved by City Attorney)	• Value of stored material or equipment, listed on Certificates of Payments, but not yet incorporated into the Work
.6 Automobile Liability Insurance: (For automobiles furnished by Contractor in course of his performance under the Contract, including Owned, Non-owned, and Hired Auto coverage)	• $1,000,000 combined single limit each occurrence for (1) Any Auto or (2) All Owned, Hired, and Non-Owned Autos
.7 Excess Coverage	• $1,000,000 each occurrence/combined aggregate in excess of limits specified for Employer's Liability, Commercial General Liability, and Automobile Liability
Aggregate Limits are per 12-month policy period unless otherwise indicated.	

11.3 *PROOF OF INSURANCE*

11.3.1 Prior to commencing services and at time during the term of the Contract, Contractor shall furnish City Engineer with Certificates of Insurance, along with Affidavit from Contractor confirming that Certificate accurately reflects insurance coverage that is available during term of the Contract. If requested in writing by City Engineer, Contractor shall furnish City Engineer with certified copies of Contractor's actual insurance policies. Failure of Contractor to provide certified copies, as requested, may be deemed, at City Engineer's or City Attorney's discretion, a material breach of the Contract.

11.3.2 Notwithstanding the proof of insurance requirements, Contractor shall continuously maintain in effect required insurance coverage set forth in Paragraph 11.2. Failure of Contractor to comply with this requirement does constitute a material breach by Contractor allowing the City, at its option, to immediately suspend or terminate work, or exercise any other remedy allowed under the Contract. Contractor agrees that the City has not waived or is not estopped to assert a material breach of the Contract because of any acts or omissions by the City regarding its review or non-review of insurance documents provided by Contractor, its agents, employees, or assigns.

11.3.3 Contractor shall provide updated certificates of insurance to the Director upon request. The Contractor shall be responsible for delivering a current certificate of insurance in the proper form to the Director as long as Contractor is required to furnish insurance coverage under Paragraph 11.2.

11.3.4 Every certificate of insurance Contractor delivers in connection with this Contract shall

11.3.4.1 be less than 12 months old;

11.3.4.2 include all pertinent identification information for the Insurer, including the company name and address, policy

number, NAIC number or AMB number, and authorized signature;

11.3.4.3 include in the Certificate Holder Box the Project name and reference numbers, contractor's email address, and indicates the name and address of the Project Manager;

11.3.4.4 include the Contractor's email address in the Certificate Holder Box;

11.3.4.5 include the Project reference numbers on the City address so the Project reference number is visible in the envelope window; and

11.3.4.6 be appropriately marked to accurately identify all coverages and limits of the policy, effective and expiration dates, and waivers of subrogation in favor of the City for Commercial General Liability, Automobile Liability, and Worker's Compensation/Employers' Liability.

11.4 *PERFORMANCE AND PAYMENT BONDS*

11.4.1 For Contracts over the value of $25,000, Contractor shall provide Bonds on the City's standard forms covering faithful performance of the Contract and payment of obligations arising thereunder as required in the Contract pursuant to Chapter 2253 of the Government Code. The Bonds must be for 100 percent of Original Contract Price and in accordance with conditions stated on standard City Performance and Payment Bond and Statutory Payment Bond forms. Bonds may be obtained from Contractor's usual source and cost for the Bonds are included in Contract Price.

11.5 *MAINTENANCE BONDS*

11.5.1 *One-year Maintenance Bond:* Contractor shall provide Bond on standard City One-year Maintenance Bond form, providing for Contractor's correction, replacement, or restoration of any portion of the Work which is found to be not in compliance with requirements of the Contract during one-year correction period required in Paragraph 12.2. The Maintenance Bond must be for 100 percent of the Original Contract Price.

11.6 *SURETY*

11.6.1 A Bond that is given or tendered to the City pursuant to the Contract must be executed by a surety company that is authorized and admitted to write surety Bonds in the State of Texas.

11.6.2 If a Bond is given or tendered to the City pursuant to the Contract in an amount greater than 10 percent of Surety's capital and surplus, Surety shall provide certification that Surety has reinsured that portion of the risk that exceeds 10 percent of Surety's capital and surplus. The reinsurance must be with one or more reinsurers who are duly authorized, accredited, or trusted to do business in the State of Texas. The amount reinsured by reinsurer may not exceed 10 percent of reinsurer's capital and surplus. The amount of allowed capital and surplus must be based on information received from State Board of Insurance.

11.6.3 If the amount of a Bond is greater than $100,000, Surety shall:

11.6.3.1 also hold certificate of authority from the United States Secretary of Treasury to qualify as surety on obligations permitted or required under federal law; or,

11.6.3.2 Surety may obtain reinsurance for any liability in excess of $100,000 from reinsurer that is authorized and admitted as a reinsurer in the State of Texas and is the holder of a certificate of authority from the United States Secretary of the Treasury to qualify as surety or reinsurer on obligations permitted or required under federal law.

11.6.4 Determination of whether Surety on the Bond or the reinsurer holds a certificate of authority from the United States Secretary of the Treasury is based on information published in Federal Register covering the date on which Bond was executed.

11.6.5 Each Bond given or tendered to the City pursuant to the Contract must be on City forms with no changes made by Contractor or Surety, and must be dated, executed, and accompanied by power of attorney stating that the attorney in fact executing such the bond has requisite authority to execute such Bond. The Bonds must be dated and must be no more than 30 days old.

11.6.6 Surety shall designate in its Bond, power of attorney, or written notice to the City, an agent resident in Harris County to whom any requisite notices may be delivered and on whom service of process may be had in matters arising out of the suretyship.

11.6.7 Contractor shall furnish information to a payment bond beneficiary as required by TEX. GOV'T CODE ANN. CH. 2253.

11.7 *DELIVERY OF BONDS*

11.7.1 Contractor shall deliver required Bonds to the City within time limits stated in Notice of Intent to Award and prior to Date of Commencement of the Work.

ARTICLE 12 - UNCOVERING AND CORRECTION OF THE WORK

12.1 *UNCOVERING OF THE WORK*

12.1.1 If a portion of the Work has been covered which City Engineer has not specifically requested to observe prior to its being covered, City Engineer may request to see such work and it must be uncovered by Contractor. If such work is in accordance with the Contract, the costs of uncovering and covering such work are charged to the City by Change Order. If such work is not in accordance with the Contract, Contractor shall pay for uncovering and shall correct the nonconforming Work promptly after receipt of Notice of Noncompliance to do so.

12.2 *CORRECTION OF THE WORK*

12.2.1 Contractor shall promptly correct or remove work rejected by City Engineer or work failing to conform to requirements of the Contract, whether observed before or after Date of Substantial Completion and whether fabricated, Installed, or completed.

12.2.2 Contractor bears costs of correcting the rejected or nonconforming work including additional testing and inspections, and compensation for Design Consultant's services and expenses made necessary thereby.

12.2.3 If within one year after Date of Substantial Completion, or after date for commencement of warranties established under Paragraph 9.9.5 or by other applicable special warranty required by the Contract, whichever is later in time, any of the Work is found not to be in accordance with the requirements of the Contract, Contractor shall correct such work promptly after receipt of Notice of Noncompliance to do so.

12.2.4 One-year correction period for portions of the Work completed after Date of Substantial Completion will begin on the date of acceptance of that portion of the Work. This obligation under this Paragraph survives acceptance of the Work under the Contract and termination of the Contract.

12.2.5 The one-year correction period does not establish a duration for the Contractor's general warranty under Paragraph 3.12. The City retains the right to recover damages from the Contractor as long as may be permitted by the applicable statute of limitations.

12.2.6 If Contractor does not proceed with correction of the nonconforming work within time fixed by Notice of Noncompliance, the City may correct nonconforming work or remove nonconforming work and store salvageable Products at Contractor's expense. Contractor shall pay the costs of correction of nonconforming work and removal and storage of salvageable Products to the City. If Contractor does not pay costs of the correction or removal and storage within 10 days after written notice, the City may sell the Products at auction or at private sale. The City will account for proceeds thereof after deducting costs and damages that would have been borne by Contractor, including compensation for services of Design Consultant and necessary expenses. If the proceeds of sale do not cover costs which Contractor should have borne, Contractor shall pay the value of the deficiency to the City.

12.2.7 Contractor bears cost of correcting work originally installed by Contractor, the City, or by separate contractors and damaged by Contractor's correction or removal of Contractor's work.

12.3 *ACCEPTANCE OF NONCONFORMING WORK*

12.3.1 If City Engineer prefers to accept work which is not in accordance with requirements of the Contract, City Engineer may do so only by issuance of Change Order, instead of requiring its removal and correction. City Engineer will determine Contract Price reduction. The reduction will become effective even if final payment has been made.

ARTICLE 13 - MISCELLANEOUS PROVISIONS

13.1 *GOVERNING LAWS*

13.1.1 The Contract is subject to the laws of the State of Texas, the City Charter and Ordinances, the laws of the federal government of the United States, and all rules and regulations of any regulatory body or officer having jurisdiction.

13.1.2 Venue for any litigation relating to the Contract is Harris County, Texas.

13.2 *SUCCESSORS*

13.2.1 The Contract binds and benefits the Parties and their legal successors and permitted assigns; however, this Paragraph 13.2.1 does not alter the restrictions on assignment and disposal of assets set out in Paragraph 13.3.1. The Contract does not create any personal liability on the part of any officer or agent of the City.

13.3 *BUSINESS STRUCTURE AND ASSIGNMENTS*

13.3.1 Contractor may not assign the Contract at law or otherwise, or dispose of all or substantially all of its assets without City Engineer's prior written consent. Nothing in this Section, however, prevents the assignment of accounts receivable or the creation of a security interest as described in §9.406 of the Texas Business & Commerce Code. In the case of such an assignment, Contractor shall immediately furnish the City with proof of the assignment and the name, telephone number, and address of the assignee and a clear identification of the fees to be paid to the assignee.

13.3.2 Any series, as defined by the TEX. BUS. ORG. CODE ANN., affiliate, subsidiary, or successor to which Contractor assigns or transfers assets shall join in privity and be jointly and severally liable under this Contract.

13.4 *WRITTEN NOTICE*

13.4.1 All notices required or permitted by the Contract must be in writing and must be effected by hand delivery; registered or certified mail, return receipt requested; or facsimile with confirmation copy mailed to receiving Party. Notice is sufficient if made or addressed with proper postage to the address stated in the Agreement for each Party ("Notice Address") or faxed to the facsimile number stated in the Agreement for each Party. The notice is deemed delivered on the earlier of:

13.4.1.1 the date the Notice is actually received;

13.4.1.2 the third day following deposit in a United States Postal Service post office or receptacle; or

13.4.1.3 the date the facsimile is sent unless the facsimile is sent after 5:00 p.m. local time of the recipient and then it is deemed received on the following day.

Any Party may change its Notice Address or facsimile number at any time by giving written notice of the change to the other Party in the manner provided for in this Paragraph at least 15 days prior to the date the change is affected.

13.5 *RIGHTS AND REMEDIES*

13.5.1 Duties and obligations imposed by the Contract and rights and remedies available thereunder are in addition to and not a limitation of duties, obligations, rights, and remedies otherwise imposed or available by law.

13.5.2 No act or failure to act by the City or Contractor is a waiver of rights or duties afforded them under the Contract, nor is the act or failure to act constitute approval of or acquiescence in a breach of the Contract. No waiver, approval or acquiescence is binding unless in writing and, in the case of the City, signed by City Engineer.

13.6 *TESTS AND INSPECTIONS*

13.6.1 Contractor shall give City Engineer, Construction Manager, and Design Consultant timely notice of the time and place where tests and inspections are to be made. Contractor shall cooperate with inspection and testing personnel to facilitate required inspections or tests.

13.6.2 The City will employ and pay for services of an independent testing laboratory to perform inspections or acceptance tests required by the Contract except:

13.6.2.1 inspections or tests covered by Paragraph 13.6.3;

13.6.2.2 those otherwise specifically provided in the Contract; or

13.6.2.3 costs incurred in connection with tests or inspections conducted pursuant to Paragraph 12.2.2.

13.6.3 Contractor is responsible for and shall pay all costs in connection with inspection or testing required in connection with City Engineer's acceptance of a Product to be incorporated into the Work, or of materials, mix designs, or equipment submitted for approval prior to Contractor's purchase thereof for incorporation into the Work.

13.6.4 Neither observations by the City, Construction Manager, or Design Consultant, nor inspections, tests, or approvals by others, relieves Contractor from Contractor's obligations to perform the Work in accordance with the Contract.

13.7 *INTEREST*

13.7.1 No interest will accrue on late payments by the City except as provided under Chapter 2251 of the Government Code.

13.8 *PARTIES IN INTEREST*

13.8.1 The Contract does not bestow any rights upon any third party, but binds and benefits the Parties only.

13.9 *ENTIRE CONTRACT*

13.9.1 The Contract merges the prior negotiations and understandings of the Parties and embodies the entire agreement of the Parties. No other agreements, assurances, conditions, covenants, express or implied, or other terms of any kind, exist between the Parties regarding the Contract.

13.10 *WRITTEN AMENDMENT*

13.10.1 Changes to the Contract that cannot be effected by Modifications, must be made by written amendment, which will not be effective until approved by City Council.

13.11 *COMPLIANCE WITH LAWS*

13.11.1 Contractor shall comply with the Americans with Disabilities Act of 1990 as amended (ADA) and Texas Architectural Barriers Act and all regulations relating to either statute.

13.11.2 Contractor shall comply with all applicable federal, state, and city laws, rules and regulations.

13.12 *SEVERABILITY*

13.12.1 If any part of the Contract is for any reason found to be unenforceable, all other parts remain enforceable to the extent permitted by law.

ARTICLE 14 - TERMINATION OR SUSPENSION OF THE CONTRACT

14.1 *TERMINATION BY THE CITY FOR CAUSE*

14.1.1 Each of the following acts or omissions of Contractor or occurrences shall constitute an "Event of Default" under the Contract:

14.1.1.1 Contractor refuses or fails to supply enough properly skilled workers or proper Products;

14.1.1.2 Contractor disregards laws, ordinances, rules, regulations, or orders of a public authority having jurisdiction;

14.1.1.3 Contractor is guilty of material breach of any duty or obligation of Contractor under the Contract, including, but not limited to, failure to submit certified payrolls electronically;

14.1.1.4 Contractor has had any other contract with the City terminated for cause at any time subsequent to the effective date of the Contract as set out in the Agreement; or

14.1.1.5 Contractor fails to utilize Ultra Low Sulfur Diesel Fuel, as required in Paragraph 3.9.1.1.

14.1.2 If an Event of Default occurs, City Engineer may, at his option and without prejudice to any other rights or remedies which the City may have, deliver a written notice to Contractor and Surety describing the Event of Default and giving the Contractor 10 days to cure the Event of Default. If after the cure period, Contractor has failed or refused to cure the Event of Default, then City Engineer may deliver a second written notice to Contractor giving notice of the termination of the Contract or of the termination of Contractor's performance under the Contract ("Notice of Termination"). If City Engineer issues a Notice of Termination, then City Engineer may, subject to any prior rights of Surety and any other rights of the City under the Contract or at law:

14.1.2.1 request that Surety complete the Work; or

14.1.2.2 take possession of the site and all materials, equipment, tools, and construction equipment and machinery on the site owned by Contractor; and

14.1.2.3 finish the Work by whatever reasonable method City Engineer may deem expedient.

14.1.3 After Contractor's receipt of a Notice of Termination, and except as otherwise directed in writing by City Engineer, Contractor shall:

14.1.3.1 stop the Work on the date and to the extent specified in the Notice of Termination;

14.1.3.2 place no further orders or subcontracts for Products or services;

14.1.3.3 terminate all orders and subcontracts to the extent that they relate to performance of work terminated;

14.1.3.4 assign to the City, in the manner, at the times, and to the extent directed by City Engineer, all rights, title, and interest of Contractor, under the terminated supply orders and subcontracts. The City may settle or pay claims arising out of termination of the orders and subcontracts;

14.1.3.5 settle all outstanding liabilities and all claims arising out of the termination of

supply orders and subcontracts with approval of City Engineer;

14.1.3.6 take action as may be necessary, or as City Engineer may direct, for protection and preservation of property related to the Work that is in possession of Contractor, and in which the City has or may acquire an interest; and

14.1.3.7 secure the Work in a safe state before leaving the site, providing any necessary safety measures, shoring, or other devices.

14.1.4 If the City terminates the Contract or terminates Contractor's performance under the Contract for any one or more of the reasons stated in Paragraph 14.1.1, Contractor may not receive any further payment until the Work is complete, subject to Paragraph 14.1.5.

14.1.5 If the unpaid balance of Contract Price exceeds the costs of finishing the Work, including liquidated damages and other amounts due under the Contract, the balance will be paid to Contractor. If the costs of finishing the Work exceed the unpaid balance, Contractor shall, within 10 days of receipt of written notice setting out the amount of the excess costs, pay the difference to the City. The amount to be paid to Contractor or the City will be certified by City Engineer in writing, and this obligation for payment shall survive termination of the Contract or termination of Contractor's performance under the Contract. Termination of the Contractor for cause shall not relieve the Surety from its obligation to complete the project.

14.2 *TERMINATION BY THE CITY FOR CONVENIENCE*

14.2.1 City Engineer may, without cause and without prejudice to other rights or remedies of the City, give Contractor and Surety a Notice of Termination with a seven days written notice.

14.2.2 After receipt of the Notice of Termination, and except as otherwise approved by City Engineer, Contractor shall conform to requirements of Paragraph 14.1.3.

14.2.3 After receipt of the Notice of Termination, Contractor shall submit to the City its termination Claim, in forms required by City Engineer. The Claim will be submitted to the City promptly, but no later than six months from the effective date of termination, unless one or more extensions are granted by City Engineer in writing. If Contractor fails to submit its termination Claim within the time allowed, in accordance with Paragraph 14.2.4, City Engineer will determine, on the basis of available information, the amount, if any, due to Contractor because of termination, and City Engineer's determination is final and binding on the Parties. The City will then pay to Contractor the amount so determined.

14.2.4 City Engineer will determine, on the basis of information available to City Engineer, the amount due, if any, to Contractor for the termination as follows:

14.2.4.1 Contract Price for all work performed in accordance with the Contract up to the date of termination determined in the manner prescribed for monthly payments in Article 9, except no retainage is withheld by the City either for payment determined by percentage of completion or for materials and equipment delivered to the site, in storage or in transit.

14.2.4.2 Reasonable termination expenses, including costs for settling and paying Subcontractor and Supplier claims arising out of termination of the Work, reasonable cost of preservation and protection of the City's property after termination, if required, and the cost of Claim preparation. Termination expenses do not include field or central office overhead, salaries of employees of Contractor, or litigation costs, including attorneys' fees.

No amount is allowed for anticipated profit or central office overhead on uncompleted work, or any cost or lost profit for other business of Contractor alleged to be damaged by the termination.

14.2.5 Contractor shall promptly remove from the site any construction equipment, tools, and temporary facilities, except the temporary facilities which City Engineer may wish to purchase and retain.

14.2.6 Contractor shall cooperate with City Engineer during the transition period.

14.2.7 The City will take possession of the Work and materials delivered to the site, in storage, or in transit, as of date or dates specified in the Notice of Termination, and is responsible for maintenance, utilities, security, and insurance, as stated in Notice of Termination.

14.3 *SUSPENSION BY THE CITY FOR CONVENIENCE*

14.3.1 City Engineer may, without cause, after giving Contractor and Surety 24-hour prior written notice, order Contractor to suspend, delay, or interrupt the Work in whole or in part for a period of time as City Engineer may determine.

14.3.2 An adjustment will be made in Contract Time equivalent to the time of suspension.

14.3.3 Adjustment will be made to Contract Price for increases in the cost of performance of the Work, including profit on increased cost of performance caused by suspension, delay, or interruption of the Work in accordance with Paragraph 7.3. No adjustment will be made to the extent that:

14.3.3.1 performance was, or would have been, suspended, delayed, or interrupted by another cause for which Contractor is responsible; or

14.3.3.2 adjustment is made or denied under another provision of the Contract.

14.4 *TERMINATION BY CONTRACTOR*

14.4.1 Contractor may terminate the Contract if the Work is stopped for a period of 30 days through no act or fault of Contractor, directly related to one of these events:

14.4.1.1 issuance of an order of a court or other public authority having jurisdiction;

14.4.1.2 act of government, such as a declaration of national emergency which makes material unavailable; or

14.4.1.3 if repeated suspensions, delays, or interruptions by the City as described in Paragraph 14.3 constitute, in the aggregate, more than 100 percent of the total number of days scheduled for completion, or 120 days in any 365-day period, whichever is less;

No termination will be effective for the above reasons if Contractor delivers written notice to City Engineer describing the reason for termination, giving the proposed termination date, and granting the City a reasonable opportunity to respond and cure any City default before termination is effective.

14.4.2 If the Contract is terminated pursuant to this Paragraph 14.4, Contractor shall comply with the requirements of Paragraphs 14.2.2 through 14.2.7.

END OF DOCUMENT

Document 00800-T

TxDOT SUPPLEMENTARY CONDITIONS

The following Paragraphs amend and supplement the August 15, 2015 edition of General Conditions. Unaltered portions of General Conditions remain in effect.

ARTICLE 1 - GENERAL PROVISIONS:

1.1 *DEFINITIONS*: *Insert the following Paragraph 1.1.9.1*

1.1.9.1 The firm of _____ has been employed by the City as Construction Manager for the Work.

****

MANDATORY

Insert Paragraph 3.5.3.1.1, using the participation goals received from TxDOT.

****

ARTICLE 3 - THE CONTRACTOR

3.5 *LABOR*: *Insert the following Paragraphs 3.5.3.1.1 and 3.5.3.1.2*

3.5.3.1.1 The Contractor shall make Good Faith Efforts to comply with the State ordinances regarding Disadvantaged Business Enterprises (DBE) participation goals. Overall, the City of Houston goal for DBE contracts is a cumulative goal, with DBE amounts varying from contract to contract. Updated annually in agreement with the Texas Department of Transportation, the goals are currently as follows:

.1 the DBE goal is 6% percent, with

.2 the race-conscious DBE goal of _____ percent

3.5.3.1.2 "Good Faith Efforts" is defined in Document 00806-T, "DISADVANTAGED BUSINESS ENTERPRISE PROGRAM REQUIREMENTS", in accordance with 49 C.F.R. § 26.

3.9 MATERIALS & EQUIPMENT: *Insert the following Paragraph 3.9.4*

3.9.4 Materials produced in a prison facility or by prison labor may not be used on this project.

ARTICLE 8 - TIME

8.1 *PROGRESS AND COMPLETION: Delete Paragraph 8.1.6. and replace with the following 8.1.6. and 8.1.6.1.*

8.1.6.1 Contractor shall credit the City by Change Order for inspection services for overtime work or work performed on Sundays or Legal Holidays. The amount Contractor credits the City will be [$50.00 per hour] [*actual costs*] per inspector for inspection services.

ARTICLE 9 - PAYMENTS AND COMPLETION

****

OPTIONAL

Use Section 9.1 for Stipulated Price (Lump Sum) Contracts with individual Specification sections containing references to unit prices.
****

9.1 *UNIT PRICE WORK: Delete Section 9.1 in its entirety and insert the following Section 9.1.*

9.1 References to Unit Prices in individual Specification sections are not applicable to the Contract. Include payment for portions of the Work required by these sections in the Stipulated Price for the Contract.

****

OPTIONAL

Using table below as a guideline, insert amount of calculated daily cost to City, to be used for liquidated damages, in Paragraph 9.12.1.1. Include calculations in Project files

Est. Construction Cost	*Liquidated Damages per Day*
Project less than $2.5 M	*$800*
Project $2.5 M to $7.5 M	*$1200*
Non-facility Projects Greater than $7.5 M	*$1500*
Facility Projects greater than $7.5 M	*$2000*

****

9.12 *LIQUIDATED DAMAGES: Insert the following Paragraph 9.12.1.1.*

9.12.1.1 The amount of liquidated damages payable by Contractor or Surety for each and every day of delay beyond Contract Time, are _____ per day.

9.13 *CONTRACTOR BONUS:*

****

OPTIONAL

Include bonus for early completion for construction contracts involving street reconstruction with an estimated Contract Price in excess of $3 million or Contract Time over 120 days. This applies to storm drainage, water and wastewater projects that involve significant street reconstruction. General Guideline:
Estimate of $3 - $6 million $1,000/day (max. 30 - 60 days)
Estimate of $6 - $10 million $1,500/day (max. 30 - 90 days)
Estimate over $10 million $2,000/day (max. 60 - 90 days)
The maximum allowable bonus will not exceed 3% of the estimated Original Contract Price on a thoroughfare or 1.5% on local streets without authorization.

****

9.13.1 BONUS FOR EARLY COMPLETION

9.13.1.1 The City will pay Contractor a bonus of $[bonus dollars] per day for each day earlier than [Contract Time stated in the Agreement] days, after Date of Commencement of the Work, that Contractor achieves substantial completion, for a maximum of [maximum days allowed] days.

ARTICLE 11 - INSURANCE AND BONDS

****

OPTIONAL

Use Paragraph 11.2.1.2 if any of the following additional insurance is required by the nature of the contract. DO NOT require any additional insurance that is unnecessary; notify the Legal Department when requiring any additional insurance. When inserting additional insurance requirements into Table 2, number them consecutively, starting with .1 as follows:
Example:

Table 2

.1 Property and Casualty Coverage
.2 Contractor's Pollution Liability Coverage

.3 Etc.

****

11.2 INSURANCE TO BE PROVIDED BY CONTRACTOR: Insert the following Paragraph 11.2.1.2

11.2.1.2 Contractor shall purchase for the duration of the Contract the insurance set out in Table 2 in addition to the minimum insurance coverage set out in section 11.2.1.

TABLE 2
ADDITIONAL REQUIRED COVERAGE
DEFENSE COSTS EXCLUDED FROM FACE AMOUNT OF POLICY.

****

OPTIONAL

Use for projects which contain construction requirements for Petroleum or (asbestos contamination) remediation or handling. Have Assistant Director initial the following block to signify approval {_____}.

****

Contractor's Pollution Liability: occurrence Including pollution coverage for Contractual Liability, Clean-up costs, Abatement, Transport, and Non-owned disposal sites. Including Bodily Injury Liability, Property Damage Liability, and environmental damage arising from pollution conditions caused in performance of operations. Including Asbestos and Lead if part of operations.	$1,000,000 each
(MCS - 90 endorsement: to Auto Policy and removal of Pollution Exclusion)	$1,000,000 CSL

****

MANDATORY

Use the below Paragraph 11.5 for all TxDOT-funded projects.

****

11.5 MAINTENANCE BONDS: *Delete Section 11.5 in its entirety and insert the following Section 11.5.*

11.5 WARRANTY OF WORK BONDS

11.5.1 ONE-YEAR WARRANTY OF WORK BONDS: One-Year Warranty of Work Bond: Contractor shall provide Bond on standard City One-Year Warranty of Work Bond form, providing for Contractor's correction, replacement, or restoration of any portion of the Work which is found to be not in compliance with requirements of the Contract during one-year correction period required in Paragraph 12.2. The One-Year Warranty of Work Bond must be for 100 percent of the Original Contract Price.

END OF DOCUMENT

Document 00806-T

DISADVANTAGED BUSINESS ENTERPRISE PROGRAM REQUIREMENTS

(City of Houston Information Requirements
for the Successful Bidder on All Construction Contracts)

1. PURPOSE. 1

2. POLICY. 1

3. DEFINITIONS. 2

4. CONTRACTOR'S RESPONSIBILITIES. 4

5. ELIGIBILITY OF DBEs. 6

6. DETERMINATION OF DBE PARTICIPATION. 7

7. RECORDS AND REPORTS. 10

8. COMPLIANCE OF CONTRACTOR. 12

9. RACE-NEUTRAL DBE PARTICIPATION. 12

DISADVANTAGED BUSINESS ENTERPRISE PROGRAM

FUNDED BY FEDERAL HIGHWAY FUNDS

1. PURPOSE.
The purpose of Document 00806-T is to carry out the U.S. Department of Transportation's policy of ensuring nondiscrimination in the award and administration of DOT assisted contracts and of creating a level playing field on which firms owned and controlled by individuals who are determined to be socially and economically disadvantaged can compete fairly for U.S. Department of Transportation ("USDOT") contracts.

2. POLICY.
It is the policy of the U.S. Department of Transportation that Disadvantaged Business Enterprises ("DBEs") as described in 49 CFR Part 26, Subpart A, shall have the opportunity to participate in the performance of contracts financed in whole or in part with Federal funds. This Document 00806-T implements the Memorandum of Understanding Regarding the Adoption of the Texas Department of Transportation's

Federally-Approved Disadvantaged Business Program by the City of Houston (the "Memorandum of Understanding" or the "MOU") in accordance with 49 CFR Part 26. City Council adopted the Memorandum by Ordinance No. 2010-0800, countersigned October 21, 2010. Consequently, the Disadvantaged Business Enterprise requirements of 49 CFR Part 26 and Memorandum apply to this Contract as follows:

a. The Contractor will solicit DBEs through reasonable and available means, as described in 49 CFR Part 26, Appendix A and the Memorandum, or show a Good Faith Effort to meet the DBE goal for this Contract.

b. The Contractor, subrecipient or subcontractor shall not discriminate on the basis of race, color, national origin, or sex in the performance of this Contract. The Contractor shall carry out applicable requirements of 49 CFR Part 26 in the award and administration of USDOT-assisted contracts. Failure by the Contractor to carry out these requirements is a material breach of this Contract, which may result in the termination of this Contract or such other remedy as the City deems appropriate.

c. The Contractor shall physically include all requirements of this Document 00806-T in any subcontract. Sections 1-3 of this Document 00806-T shall apply to this Contract. If this Contract contains a race-conscious DBE participation goal, Sections 4–8 shall apply to this Contract. If this Contract contains a race-neutral participation goal, Sections 6 and 9 shall apply to this Contract.

d. TxDOT DBE forms applicable to this DBE Program are currently available at: http://www.txdot.gov/txdot_library/doing_business/dbe.htm

   If the Contractor encounters difficulties obtaining or completing the required documents, the Contractor shall request assistance from the Liaison Officer. Upon receiving a reasonable, written request, or at the Liaison Officer's sole discretion, the Liaison Officer shall provide documents and administrative assistance to the Contractor.

e. The Contractor or any participating subcontractor shall submit documents and questions concerning this Program to

   DBE Liaison Officer
   City of Houston
   611 Walker, 7th Floor
   Houston, Texas 77002
   (713) 837-9015

3. DEFINITIONS.

Any term defined in 49 CFR Part 26 shall have the same definition and use in this Document 00806-T. The definitions of some key terms from 49 CFR § 26.5 are included in this Document 00806-T merely for convenience. Any term used in this Document 00806-T that is not defined in 49 CFR Part 26 shall have the same meaning

as defined elsewhere in this Contract or the meaning provided below:

a. "Broker" is an intermediary or middleman that does not take possession of a commodity or act as a regular dealer selling to the public.

b. "Disadvantaged Business Enterprise" or "DBE" means a for-profit small business concern

(1) That is at least 51 percent owned by one or more individuals who are both socially and economically disadvantaged or, in the case of a corporation, in which 51 percent of the stock is owned by one or more such individuals; and
(2) Whose management and daily business operations are controlled by one or more of the socially and economically disadvantaged individuals who own it.

c. "DBE Joint Venture" means an association of a DBE firm and 1 or more other firm(s) to carry out a single business enterprise for profit for which purpose they combine their property, capital, efforts, skills and knowledge, and in which the DBE is responsible for a distinct, clearly defined portion of the work of the Contract and whose share in the capital contribution, control, management, risks, and profits of the joint venture are commensurate with its ownership interest.

d. "Federal Aid Contract" is any contract between the City and a Contractor which is paid for in whole or in part with USDOT financial assistance.

e. "Good Faith Effort" means efforts to achieve a DBE goal or other requirement of the DBE program which, by their scope, intensity, and appropriateness to the objective, can reasonably be expected to fulfill the program requirement, as set out in Section 4 below.

f. "Liaison Officer" means the Director of the Mayor's Office of Business Opportunity ("OBO") or an authorized representative.

g. "Manufacturer" is a firm that operates or maintains a factory or establishment that produces, on the premises, the materials, supplies, articles, or equipment required under the contract and of the general character described by the specifications.

h. "Regular Dealer" is a firm that owns, operates, or maintains a store, warehouse, or other establishment in which the materials, supplies, articles or equipment of the general character described by the specifications and required under the contract are bought, kept in stock, and regularly sold or leased to the public in the usual course of business. To be a Regular Dealer, the firm must be an established, regular business that engages in, as its principal business and under its own name, the purchase and sale or lease of the products in question. A Regular Dealer in such bulk items as steel, cement, gravel, stone, and petroleum products need not keep such products in stock if it owns and operates distribution equipment for the

products. Any supplementing of a Regular Dealer's own distribution equipment shall be by a long-term lease agreement and not on an ad hoc or contract-by-contract basis. Brokers, packagers, manufacturers' representatives, or other persons who arrange or expedite transactions shall not be regarded as a Regular Dealer.

i. "Texas Unified Certification Program" or "TUCP" provides applicants with a consolidated process for DBE certification, such that applicants are required to apply only once for a DBE certification that will be honored by all recipients of federal funds in the state. The TUCP, by Memorandum of Agreement, established six member entities to serve as certifying agents for Texas in specified regions.

j. "TxDOT" means the Texas Department of Transportation.

k. "USDOT" means the U.S. Department of Transportation, including the Office of the Secretary, the Federal Highway Administration (FHWA), the Federal Transit Administration (FTA), and the Federal Aviation Administration (FAA).

4. CONTRACTOR'S RESPONSIBILITIES.

In this Contract, the Contractor must satisfy the following requirements:

a. After conditional award of the Contract, the Contractor shall submit a completed Form SMS.4901 "DBE Commitment Agreement", Form.SMS 4901-T "DBE Trucking Commitment Agreement", or Form SMS.4901-M/S "DBE Material & Supplier Commitment Agreement" for each DBE the Contractor intends to use to satisfy the DBE goal or a Good Faith Effort to explain why the goal could not be reached. The Contractor shall send the completed forms to the Liason Officer. The Contractor shall insure that these documents arrive at the City of Houston, Texas not later than 5:00 p.m. on the 10th business day (excluding national holidays) after the conditional award of the contract. When requested, additional time, not to exceed seven business days (excluding national holidays) may be granted based on documentation submitted by the Contractor.

b. If the Contractor is a DBE prime contractor, it may receive credit toward the DBE goal for work performed by the Contractor's own forces and work subcontracted to DBEs. A DBE prime contractor must make a Good Faith Effort to meet the goals. In the event a DBE prime contractor subcontracts to a non-DBE, that information must be reported on Form SMS.4902.

c. If the Contractor cannot meet the Contract goal, in whole or in part, the Contractor shall make adequate Good Faith Efforts to obtain DBE participation as described in 49 CFR Part 26, Appendix A. The following list is not mandatory but provides non-exhaustive examples of the types of action that Contractor may take and document to show Good Faith Efforts. Other factors or types of efforts may be relevant in appropriate cases.

(1) Soliciting through all reasonable and available means (e.g. attendance at prebid meetings, advertising, and/or written notices) the interest of all certified DBEs who have the capability to perform the work of the contract. The solicitation must be done within sufficient time to allow the DBEs to respond to it. Appropriate steps must be taken to follow up initial solicitations to determine, with certainty, if the DBEs are interested.

(2) Selecting portions of the work to be performed by DBEs in order to increase the likelihood that the DBE goals will be achieved. This includes, where appropriate, breaking out contract work items into economically feasible units to facilitate DBE participation, even when the Contractor might otherwise prefer to perform the work items with its own forces.

(3) Providing interested DBEs with adequate information about the plans, specifications, and requirements of the Contract in a timely manner to assist them in responding to a solicitation.

(4) Facilitating DBE participation by negotiating in good faith with interested DBEs to make a portion of the work available to DBE subcontractors and suppliers. The Contractor may select those portions of the work or material needs that are consistent with the available DBE subcontractors and suppliers. Evidence of such negotiations includes the names, addresses, and telephone numbers of DBEs that were considered; a description of the information provided regarding the plans and specifications for the work selected for subcontracting; and evidence as to why additional agreements could not be reached for DBEs to perform the work.

(5) Considering a number of factors in negotiating with subcontractors, including DBE subcontractors, and taking a firm price, capabilities, and contract goals into consideration. Additional cost involved in finding and using DBEs is not in itself sufficient reason for a Contractor to fail to meet the Contract DBE goal as long as such cost are reasonable. Also, the ability or desire of the Contractor to perform the work of the Contract with its own organization does not relieve the Bidder of the responsibility to make Good Faith Efforts. A Contractor is not required to accept higher quotes from DBEs if the price difference is excessive or unreasonable.

(6) Rejecting DBEs only after a thorough investigation of their capabilities and for sound reasons. The Contractor's standing within its industry, membership in specific groups, organizations, or associations and political or social affiliations (for example union vs. non-union employee status) are not legitimate causes for the rejection or non-solicitation of bids and the Contractor's efforts to meet the project goal.

(7) Making efforts to assist interested DBEs in obtaining bonding, lines of

credit, or insurance as required by the recipient or Contractor.

(8) Making efforts to assist interested DBEs in obtaining necessary equipment, supplies, materials, or related assistance or services.

(9) Effectively using the services of available minority/women community organizations; minority/women Contractors' groups; local, state, and Federal minority/women business assistance offices; and other organizations as allowed on a case-by-case basis to provide assistance in the recruitment and placement of DBEs.

d. If the Liaison Officer's representative determines that the Contractor has failed to meet the Good Faith Effort requirements, the Contractor shall be given an opportunity for reconsideration by the Liaison Officer.

e. If the Contractor refuses, neglects, or fails to meet the DBE goal or comply with Good Faith Effort requirements, any proposal guaranty or similar security filed with the bid shall become the property of the City, not as a penalty, but as liquidated damages to the City.

f. The preceding information shall be submitted directly to the Liaison Officer, 611 Walker, 7th Floor, Houston, Texas 77002.

g. The Contractor shall not terminate for convenience a DBE subcontractor named in any DBE Commitment Agreement submitted by the Contractor without the prior, written consent of the Liaison Officer.

h. The Contractor shall also make a Good Faith Effort to replace a DBE subcontractor that is unable to perform successfully with another DBE, to the extent needed to meet the contract goal. The Contractor shall submit a completed Form SMS.4901 "DBE Commitment Agreement", Form SMS.4901-T "DBE Trucking Commitment Agreement", or Form SMS.4901-M/S "DBE Material & Supplier Commitment Agreement" for the substitute DBE firm(s). Any substitution of DBEs shall be subject to approval by the Liaison Officer. Prior to approving the substitution, the Liaison Officer's representative will request a statement from the DBE concerning it being replaced. The Contractor shall review the deviation language issued in 2011 for changes to the listed DBE.

i. The Contractor shall designate a DBE liaison representative who will administer the Contractor's DBE program and who will be responsible for maintenance of records of efforts and contacts made to subcontract with DBEs.

j. The Contractor is encouraged to investigate the services offered by banks owned and controlled by disadvantaged individuals and to make use of these banks where feasible.

5. <u>ELIGIBILITY OF DBEs</u>.

a. TxDOT maintains the Texas Unified Certification Program (TUCP) DBE Directory containing the names of firms that have been certified to be eligible to participate as DBE's on DOT financially assisted contracts. This Directory is available from the Liaison Officer or his or her representative. An update of the Directory can be currently found on the Internet at http://www.dot.state.tx.us/business/tucp/default.htm.

b. The member entities of the TUCP, including the City, certify the eligibility of DBEs and DBE joint ventures to perform DBE subcontract work on USDOT financially assisted contracts.

c. The Contractor shall only submit the names of DBE firms that are certified and eligible to perform the work at the time the Contractor submits commitments.

d. For purposes of the DBE participation goal on this project, DBEs will only be allowed to perform work in the categories of work for which they are certified.

e. Only DBE firms certified at the time of execution of a contract/subcontract/purchase order are eligible for DBE goal participation.

6. DETERMINATION OF DBE PARTICIPATION.

When a DBE subcontractor participates in this Contract, only the values of the work actually performed by the DBE subcontractor, as referenced below, shall be counted by the Contractor toward DBE goals:

a. The total amount paid to the DBE subcontractor for work performed with the DBE subcontractor's own forces is counted toward the DBE goal. When a DBE subcontractor subcontracts part of the work of its contract to another firm, the value of the subcontracted work may be counted toward DBE goals only if the subcontractor is itself a DBE. Work that a DBE subcontractor subcontracts to a non-DBE firm does not count toward DBE goals.

b. A Contractor may count toward its DBE goal a portion of the total value of the contract amount paid to a DBE Joint Venture equal to the distinct, clearly defined portion of the work of the contract performed by the DBE subcontractor.

(1) A Contractor may count toward its DBE goal only expenditures to DBE subcontractors that perform a commercially useful function (CUF) in the work of a contract or purchase order. A DBE subcontractor is considered to perform a CUF when it is responsible for execution of the work of the contract and is carrying out its responsibilities by actually performing, managing, and supervising the work involved. To perform a CUF, the DBE subcontractor must also be responsible, with respect to materials and supplies used on the contract, for negotiating price, determining

quality and quantity, ordering the material, and installing (where applicable) and paying for the material itself.

In accordance with 49 CFR Part 26, Appendix A, "Guidance Concerning Good Faith Efforts", contractors may make efforts to assist interested DBE subcontractors in obtaining necessary equipment, supplies, materials, or related assistance or services. Contractors may not however, negotiate the price of materials or supplies used on the contract by the DBE subcontractor, nor may they determine quality and quantity, order the materials themselves, nor install the materials (where applicable), or pay for the material themselves. Contractors, however, may share the quotations they receive from the material supplier with the DBE firm, so that the DBE firm may negotiate a reasonable price with the material supplier.

In all cases, prime or other non-DBE subcontractor assistance will not be credited toward the DBE goal.

(2) A DBE subcontractor does not perform a CUF if its role is limited to that of an extra participant in a transaction, contract, or project through which funds are passed in order to obtain the appearance of DBE subcontractor participation.

Consistent with industry practices, 49 CFR Part 26, and the TxDOT DBE program, a DBE subcontractor may enter into second-tier subcontracts, amounting up to 70% of their contract. Work subcontracted to a non-DBE does not count towards DBE goals. If a DBE subcontractor does not perform or exercise responsibility for at least 30% of the total cost of its contract with its own work force, or the DBE subcontractor subcontracts a greater portion of the work of a contract than would be expected on the basis of normal industry practice for the type of work involved, it will be presumed that the DBE subcontractor is not performing a CUF.

(3) A DBE trucking firm (including an owner operator who is certified as a DBE) is considered to be performing a CUF when the DBE subcontractor is responsible for the management and supervision of the entire trucking operation on a particular contract and the DBE subcontractor owns and operates at least 1 fully licensed, insured, and operational truck used on the contract.

a. The Contractor receives credit for the total value of the transportation services the DBE provides on a contract using trucks it owns, insures, and operates using drivers it employs.

b. The DBE subcontractor may lease trucks from another DBE subcontractor firm, including an owner operator who is certified as

a DBE subcontractor. The DBE subcontractor who leases trucks from another DBE subcontractor receives credit for the total value of the transportation services the lessee DBE provides on the Contract.

c. The DBE subcontractor may also lease trucks from a non-DBE firm, including from an owner-operator. The DBE subcontractor who leases trucks from a non-DBE is entitled to credit for the total value of transportation services provided by non-DBE lessees not to exceed the value of transportation services provided by the DBE-owned trucks on the contract. Additional participation by non-DBE lessees receive credit only for the fee or commission it receives as result of the lease arrangement.

d. A lease must indicate that the DBE subcontractor has exclusive use of and control over the trucks giving the DBE absolute priority for use of the leased trucks. Leased trucks must display the name and identification number of the DBE subcontractor.

e. When a DBE subcontractor is presumed not to be performing a CUF, the DBE subcontractor may present evidence to rebut this presumption.

c. Project materials or supplies acquired from an affiliate of the prime contractor can not directly or indirectly (2nd or lower tier subcontractor) be used for DBE goal credit.

d. Depending on the classification of the DBE subcontractor, the Contractor may count purchases of materials and supplies from DBE subcontractor towards its DBE participation goal in the percentages described below:

(1) materials or supplies purchased from a DBE Manufacturer at 100% of the Contractor's cost of the materials or supplies ("Manufacturer" is defined in Section 3 of this Document 00806-T).

(2) materials or supplies purchased from a DBE Regular Dealer at 60% of the Contractor's cost of the materials or supplies ("Regular Dealer" is defined in Section 3 of this Document 00806-T).

(3) materials or supplies purchased from a DBE firm which is neither a Manufacturer nor a Regular Dealer, at 100% of Contractor's cost paid for fees or commissions charged by the DBE firm for assistance in the procurement of the materials and supplies, provided the fees are reasonable within the applicable market area and not excessive as compared with fees customarily allowed for similar services within the market area. No portion of the cost of the materials and supplies count toward the DBE participation goal.

(4) services, such as professional, technical, consultant or managerial services, or for providing bonds or insurance specifically required for the performance of a DOT-assisted contract, at 100% toward DBE goals, provided the fees are reasonable within the applicable market area and not excessive as compared with fees customarily allowed for similar services within the market area.

e. If the Contractor chooses to assist a DBE firm, other than a manufacturing material supplier or regular dealer, and the DBE firm accepts the assistance, the Contractor may act solely as a guarantor by use of a two-party check for payment of materials to be used on the project by the DBE firm. The material supplier must invoice the DBE firm, who will then present the invoice to the Contractor. The Contractor may issue a joint check to the DBE firm and the material supplier, and the DBE firm must issue the remittance to the material supplier. No funds shall go directly from the Contractor to the material supplier. The DBE firm may accept or reject this joint checking arrangement. The Contractor shall:

(1) obtain approval from the Liaison Officer prior to implementing the use of joint check arrangements with the DBE firm;

(2) submit Joint Check Approval Form 2178 to the Liaison Officer requesting approval; and

(3) provide copies of cancelled joint checks upon request. No DBE goal credit will be allowed for the cost of DBE materials that are paid by the Contractor directly to the material supplier.

f. The Contractor shall receive no DBE participation goal credit for supplies and equipment the DBE subcontractor leases from the Contractor or its affiliates.

g. The Contractor shall receive no DBE participation goal credit for the time the Liaison Officer determines that the DBE firm was not performing a CUF. The denial period of time may occur before or after a determination has been made by the Liaison Officer. In case of the denial of credit for non-performance of a CUF of a DBE, the Contractor shall provide a substitute DBE firm to meet the contract goal or provide an adequate Good Faith Effort when applicable.

7. RECORDS AND REPORTS.

a. While the Contractor is performing work and until all Project work is completed, the Contractor shall submit a "DBE Progress Report", Form SMS.4903, for each month to the Liaison Officer no later than the 15 days after the end of the calendar month. The Contractor shall include on the DBE Progress Report, Form SMS.4903, all payments the Contractor made to

meet the DBE goal within the applicable month, identifying separately payments for DBE or SBE race-neutral participation and non-DBE SBEs participation. The Contractor shall submit a "DBE Final Report," SMS.4904, in the month after all DBE subcontracting work is completed and after the Contractor makes final payment to all DBE firms.

The Contractor shall submit the original final report to the Liaison Officer and a copy to the Project Manager. The Liaison Officer may require the Contractor to provide additional information to ensure final payment of DBE firms. The Contractor shall verify amounts as being paid to DBE firms by providing copies of cancelled checks paid to DBE firms, which the Liaison Officer may select on a random basis. Cancelled checks and invoices should reference the City project number.

b. The Contractor shall identify each DBE firm on the monthly report by Vendor Number, name, and the amount of actual payment made to each during the monthly period. The Contractor shall submit reports stating no activity occurred when the Contractor has not utilized any DBE firms in a monthly period.

c. Prior to receiving final payment, the Contractor shall submit Form SMS.4904, "DBE Final Report". If the DBE goal requirement is not met, the Contractor shall also submit a TxDOT Form 2182 with the Form SMS.4904, "DBE Final Report."

d. While the Contractor is performing work and until all Project work is completed, the Contractor shall submit TxDOT Form 2177, "Prompt Payment Certification (Federal-Aid Projects)" for each month to the Liaison Officer before the last day of the following calendar month.

e. If the Contractor uses a DBE trucker, the Contractor shall submit Form 2371, "DBE Trucking Credit Worksheet," for each month to the Liaison Officer before the last day of the following calendar month.

f. The Contractor shall retain copies of such records for a period of three years following completion of the Contract work and make such records available at reasonable times and places for inspection by authorized representatives of the City. The Contractor shall also provide copies of subcontracts or agreements and other documentation upon request from authorized representatives of the City.

g. If TxDOT changes any of the forms referenced in this Document 00806-T or DBE requirements, the Contractor shall use the newest available, applicable form provided by TxDOT for the purpose described in this Document 00806-T. The Liaison Officer or Project Manager may provide the Contractor with instructions when material changes to the DBE Program occur.

8. COMPLIANCE OF CONTRACTOR.
To ensure that the Contractor complies with USDOT DBE requirements, the Liaison Officer and Project Manager shall monitor the Contractor's efforts involving DBE firms during the performance of this Contract. This will be accomplished by a review of monthly reports submitted to the Project Manager by the Contractor indicating the Contractor's progress in achieving the DBE contract goal, and by compliance reviews conducted on the project site by the Project Manager.

a. The Contractor shall receive credit toward the DBE goal based on actual payments to the DBE subcontractor. The Contractor shall notify the Project Manager if the Contractor withholds or reduces payment to any DBE subcontractor. The Contractor shall submit an affidavit detailing the DBE subcontract payments prior to receiving final payment for the Contract.

b. If the Contractor terminates a DBE subcontractor or reduces the work to be provided by a DBE firm as provided in Contractor's Form SMS.4901, "Commitment Agreement", the Contractor shall make Good Faith Efforts to find another DBE subcontractor to substitute for the original DBE subcontractor. These Good Faith Efforts shall be directed at finding another DBE firm to perform at least the same amount of work under the contract as the DBE subcontractor that was terminated, to the extent needed to meet the contract goal.

c. The Contractor shall submit Form 2228, "DBE Substitution Request", to the Project Manager and a copy to the Liaison Officer prior to substituting a DBE firm on the Project. The Contractor shall receive no DBE participation goal credit for work on those items being substituted unless the Contractor receives prior approval of the substitution from the Project Manager.

d. The Contractor shall receive no DBE participation goal credit for work when the Contractor or the Contractor's affiliate provides the DBE firm with a work crew, equipment, or supplies.

e. A Contractor's failure to comply with the requirements of this Document 00806-T shall constitute a material breach of this Contract. In such a case, the City reserves the right to terminate the contract; to deduct the amount of DBE goal not accomplished by DBE firms from the money due or to become due the Contractor, or to secure a refund, not as a penalty but as liquidated damages to the Department or such other remedy or remedies as the Department deems appropriate.

9. RACE-NEUTRAL DBE PARTICIPATION.
If there is no DBE goal, the DBE requirements of 49 CFR Part 26 apply to this Contract as follows:

a. The Contractor shall offer DBE firms, as described in 49 CFR Part 26, Subpart A, the opportunity to compete fairly for contracts and subcontractors financed in whole or in part with Federal funds. Each month until the Contractor receives final payment from the City, the Contractor shall report Race-Neutral DBE and SBE participation on projects with no DBE goal to the Liaison Officer on Form SMS.4903, "DBE Monthly Progress Report". Payments to DBE firms reported on Form SMS.4903 are subject to the requirements of this Document 00806-T, Section 6, "Determination of DBE Participation."

b. The Contractor shall receive credit toward the DBE goal based on actual payments to the DBE firms. The Contractor shall notify the Project Manager and Liaison Officer if the Contractor withholds or reduces payment to a DBE firm.

c. The Contractor's request for substitutions of DBE firms shall be accompanied by a detailed explanation which should substantiate the need for a substitution. The Department may verify the explanation with the DBE firm being replaced before giving approval of the substitution.

d. A Contractor's failure to meet the DBE goal and failure to demonstrate to the Department's satisfaction sufficient "Good Faith Effort" on the Contractor's part to obtain DBE firm participation shall constitute a breach of contract. In such a case, the City reserves the right to terminate the Contract; to deduct the amount of DBE goal not accomplished by DBEs from the money due or to become due the Contractor, not as a penalty but as damages to the City's DBE program; or such other remedy or remedies as the City deems appropriate.

END OF DOCUMENT

DOCUMENT 00812

WAGE SCALE FOR HEAVY CONSTRUCTION

1.01 Following 29 CFR 5.5 (a) (1) (v), use the rates listed on the Wage Determination Attachment for minimum wage and benefits for the labor classifications applicable to the Work.

1.02 These rates do not prohibit payment of more than the rates stated.

1.03 Apply rates in this Document 00812 to site work greater than five (5) feet from exterior wall of new building under construction or from exterior wall of existing building.

1.04 The Contractor shall submit the "Certificate from Contractor Appointing Officer or Employee to Supervise Payment of Employees" (Exhibit "A") to the Monitoring Authority listed in Document 00495 prior to final execution of the contract.

1.05 During the course of the work, Subcontractors shall submit the "Certificate from Subcontractor Appointing Officer or Employee to Supervise Payment of Employees" (Exhibit "B") to the Monitoring Authority listed in Document 00495.

1.06 Contractor and all subcontractors will submit payrolls electronically to the Department through the online reporting system unless told otherwise by the Office of Business Opportunity.

EXHIBIT "A"

CERTIFICATE FROM CONTRACTOR APPOINTING OFFICER OR EMPLOYEE TO SUPERVISE PAYMENT OF EMPLOYEES

Project Name _____

_____

_____

Project WBS#: _____ Date _____

(I) (We) hereby certify that (I am) (we are) the Prime Contractor for _____

_____
(specify type of job)

in connection with construction of the above-mentioned Project, and that (I) (we) have appointed _____, whose signature appears below, to supervise the payment of (my) (our) employees beginning _____, 20___; that he/she is in a position to have full knowledge of the facts set forth in the payroll documents and in the statement of compliance required by the Copeland Act and the City of Houston, which he/she is to execute with (my) (our) full authority and approval until such time as (I) (we) submit to the City of Houston a new certificate appointing some other person for the purposes hereinabove stated.

_____ Phone: _____
(Identifying Signature of Appointee)

Witness/Attest:

_____
(Name of Firm or Corporation)

By: _____ By: _____
(Signature) (Signature)

_____ _____
(Title) (Title)

NOTE: This certificate must be executed by an authorized officer of a corporation or by a member of a partnership, and shall be executed prior to and be submitted with the first payroll. Should the appointee be changed, a new certificate must accompany the first payroll for which the new appointee executes a statement of compliance required by the Copeland Act and the City of Houston.

EXHIBIT "B"

CERTIFICATE FROM SUBCONTRACTOR APPOINTING OFFICER OR EMPLOYEE TO SUPERVISE PAYMENT OF EMPLOYEES

Project Name _____

_____

_____

Project WBS#: _____ Date _____

(I) (We) hereby certify that (I am) (we are) the Subcontractor for _____

_____
(specify type of job)

in connection with construction of the above-mentioned Project, and that (I) (we) have appointed _____, whose signature appears below, to supervise the payment of (my) (our) employees beginning _____, 20___; that he/she is in a position to have full knowledge of the facts set forth in the payroll documents and in the statement of compliance required by the Copeland Act and the City of Houston, which he/she is to execute with (my) (our) full authority and approval until such time as (I) (we) submit to the City of Houston a new certificate appointing some other person for the purposes hereinabove stated.

_____ Phone: _____
(Identifying Signature of Appointee)

Witness/Attest: _____
(Name of Firm or Corporation)

By: _____ By: _____
(Signature) (Signature)

_____ _____
(Title) (Title)

NOTE: This certificate must be executed by an authorized officer of a corporation or by a member of a partnership, and shall be executed prior to and be submitted with the first payroll. Should the appointee be changed, a new certificate must accompany the first payroll for which the new appointee executes a statement of compliance required by the Copeland Act and the City of Houston.

Wage Determination Publication Date:
January 2, 2015
for
General Decision Number **TX150042 01/02/2015 TX42**
Superseded General Decision Number TX20140042

State: TEXAS
Construction Type: HEAVY
County (ies): Harris

HEAVY CONSTRUCTION PROJECTS including work on water and sewer lines. (Does not include flood control.)

Modification Number:	Publication Date:
0	01/02/2015

WAGE DETERMINATION ATTACHMENT:

END OF DOCUMENT

General Decision Number: TX150042 01/02/2015 TX42

Superseded General Decision Number: TX20140042

State: Texas

Construction Type: Heavy

County: Harris County in Texas.

HEAVY CONSTRUCTION PROJECTS Including Water and Sewer Lines
(Does Not Include Flood Control).

Note: Executive Order (EO) 13658 establishes an hourly minimum wage of $10.10 for 2015 that applies to all contracts subject to the Davis-Bacon Act for which the solicitation is issued on or after January 1, 2015. If this contract is covered by the EO, the contractor must pay all workers in any classification listed on this wage determination at least $10.10 (or the applicable wage rate listed on this wage determination, if it is higher) for all hours spent performing on the contract. The EO minimum wage rate will be adjusted annually. Additional information on contractor requirements and worker protections under the EO is available at www.dol.gov/whd/govcontracts.

Modification Number	Publication Date
0	01/02/2015

* SFTX0669-001 07/01/2013

	Rates	Fringes
SPRINKLER FITTER (Fire Sprinklers)	$ 26.36	16.62

SUTX2005-019 08/16/2005

	Rates	Fringes
CARPENTER	$ 14.04	0.00
CEMENT MASON/CONCRETE FINISHER	$ 12.50	1.17
ELECTRICIAN	$ 17.00	0.04
Formbuilder/Formsetter	$ 13.84	1.17
IRONWORKER, REINFORCING	$ 11.28	0.00
Laborers:		
Common	$ 8.94	0.00
Landscape	$ 7.35	0.00
Mason Tender Cement	$ 9.94	0.00
Pipelayer	$ 10.14	0.00
PIPEFITTER	$ 17.00	0.04
POWER EQUIPMENT OPERATOR:		
Backhoe	$ 13.47	0.00

Bulldozer	$ 12.58	0.00
Crane	$ 15.33	0.57
Excavator	$ 16.37	0.00
Front End Loader	$ 12.16	0.00
Grader	$ 12.20	1.48
Tractor	$ 15.00	0.00
TRUCK DRIVER	$ 12.02	1.02

WELDERS - Receive rate prescribed for craft performing operation to which welding is incidental.

==========

Unlisted classifications needed for work not included within the scope of the classifications listed may be added after award only as provided in the labor standards contract clauses (29CFR 5.5 (a) (1) (ii)).

The body of each wage determination lists the classification and wage rates that have been found to be prevailing for the cited type(s) of construction in the area covered by the wage determination. The classifications are listed in alphabetical order of "identifiers" that indicate whether the particular rate is a union rate (current union negotiated rate for local), a survey rate (weighted average rate) or a union average rate (weighted union average rate).

Union Rate Identifiers

A four letter classification abbreviation identifier enclosed in dotted lines beginning with characters other than "SU" or "UAVG" denotes that the union classification and rate were prevailing for that classification in the survey. Example: PLUM0198-005 07/01/2014. PLUM is an abbreviation identifier of the union which prevailed in the survey for this classification, which in this example would be Plumbers. 0198 indicates the local union number or district council number where applicable, i.e., Plumbers Local 0198. The next number, 005 in the example, is an internal number used in processing the wage determination. 07/01/2014 is the effective date of the most current negotiated rate, which in this example is July 1, 2014.

Union prevailing wage rates are updated to reflect all rate changes in the collective bargaining agreement (CBA) governing this classification and rate.

Survey Rate Identifiers

Classifications listed under the "SU" identifier indicate that no one rate prevailed for this classification in the survey and the published rate is derived by computing a weighted average rate based on all the rates reported in the survey for that classification. As this weighted average rate includes all

rates reported in the survey, it may include both union and non-union rates. Example: SULA2012-007 5/13/2014. SU indicates the rates are survey rates based on a weighted average calculation of rates and are not majority rates. LA indicates the State of Louisiana. 2012 is the year of survey on which these classifications and rates are based. The next number, 007 in the example, is an internal number used in producing the wage determination. 5/13/2014 indicates the survey completion date for the classifications and rates under that identifier.

Survey wage rates are not updated and remain in effect until a new survey is conducted.

Union Average Rate Identifiers

Classification(s) listed under the UAVG identifier indicate that no single majority rate prevailed for those classifications; however, 100% of the data reported for the classifications was union data. EXAMPLE: UAVG-OH-0010 08/29/2014. UAVG indicates that the rate is a weighted union average rate. OH indicates the state. The next number, 0010 in the example, is an internal number used in producing the wage determination. 08/29/2014 indicates the survey completion date for the classifications and rates under that identifier.

A UAVG rate will be updated once a year, usually in January of each year, to reflect a weighted average of the current negotiated/CBA rate of the union locals from which the rate is based.

WAGE DETERMINATION APPEALS PROCESS

1.) Has there been an initial decision in the matter? This can be:

* an existing published wage determination
* a survey underlying a wage determination
* a Wage and Hour Division letter setting forth a position on a wage determination matter
* a conformance (additional classification and rate) ruling

On survey related matters, initial contact, including requests for summaries of surveys, should be with the Wage and Hour Regional Office for the area in which the survey was conducted because those Regional Offices have responsibility for the Davis-Bacon survey program. If the response from this initial contact is not satisfactory, then the process described in 2.) and 3.) should be followed.

With regard to any other matter not yet ripe for the formal process described here, initial contact should be with the Branch of Construction Wage Determinations. Write to:

Branch of Construction Wage Determinations
Wage and Hour Division
U.S. Department of Labor
200 Constitution Avenue, N.W.

Washington, DC 20210

2.) If the answer to the question in 1.) is yes, then an interested party (those affected by the action) can request review and reconsideration from the Wage and Hour Administrator (See 29 CFR Part 1.8 and 29 CFR Part 7). Write to:

Wage and Hour Administrator
U.S. Department of Labor
200 Constitution Avenue, N.W.
Washington, DC 20210

The request should be accompanied by a full statement of the interested party's position and by any information (wage payment data, project description, area practice material, etc.) that the requestor considers relevant to the issue.

3.) If the decision of the Administrator is not favorable, an interested party may appeal directly to the Administrative Review Board (formerly the Wage Appeals Board). Write to:

Administrative Review Board
U.S. Department of Labor
200 Constitution Avenue, N.W.
Washington, DC 20210

4.) All decisions by the Administrative Review Board are final.

==========

END OF GENERAL DECISION

DOCUMENT 00851

BUY AMERICA REQUIREMENTS

1.0 Contractors shall comply with the latest provisions of Buy America as listed at 23 CFR 635.410 and use steel or iron materials manufactured* in the United States except when:

- the cost of materials, including delivery, does not exceed 0.1% of the total Contract cost or $2,500, whichever is greater;
- the Contract contains an alternate Item for a foreign source steel or iron product and the Contract is awarded based on the alternate Item; or
- the materials are temporarily installed.

2.0 Contractor shall provide a notarized original of the FORM D-9-USA-1 with the proper attachments for verification of compliance. A current version of FORM D-9-USA-1 can be found here:

http://www.txdot.gov/txdoteforms/GetForm?formName=/1818.xdp&appID=/CST&status=/reportError.jsp&configFile=WFServletConfig.xml

* *Manufacturing is any process that modifies the chemical content, physical shape or size, or final finish of a product. Manufacturing begins with initial melting and mixing and continues through fabrication (cutting, drilling, welding, bending, etc.) and coating (paint, galvanizing, epoxy, etc.).*

DOCUMENT 00851

BUY AMERICA REQUIREMENTS

23 Code of Federal Regulations (CFR) Chapter I
§ 635.410 Buy America Requirements

(a) The provisions of this section shall prevail and be given precedence over any requirements of this subpart which are contrary to this section. However, nothing in this section shall be construed to be contrary to the requirements of §635.409(a) of this subpart.

(b) No Federal-aid highway construction project is to be authorized for advertisement or otherwise authorized to proceed unless at least one of the following requirements is met:

(1) The project either: (i) Includes no permanently incorporated steel or iron materials, or (ii) if steel or iron materials are to be used, all manufacturing processes, including application of a coating, for these materials must occur in the United States. Coating includes all processes which protect or enhance the value of the material to which the coating is applied.

(2) The State has standard contract provisions that require the use of domestic materials and products, including steel and iron materials, to the same or greater extent as the provisions set forth in this section.

(3) The State elects to include alternate bid provisions for foreign and domestic steel and iron materials which comply with the following requirements. Any procedure for obtaining alternate bids based on furnishing foreign steel and iron materials which is acceptable to the Division Administrator may be used. The contract provisions must (i) require all bidders to submit a bid based on furnishing domestic steel and iron materials, and (ii) clearly state that the contract will be awarded to the bidder who submits the lowest total bid based on furnishing domestic steel and iron materials unless such total bid exceeds the lowest total bid based on furnishing foreign steel and iron materials by more than 25 percent.

(4) When steel and iron materials are used in a project, the requirements of this section do not prevent a minimal use of foreign steel and iron materials, if the cost of such materials used does not exceed one-tenth of one percent (0.1 percent) of the total contract cost or $2,500, whichever is greater. For purposes of this paragraph, the cost is that shown to be the value of the steel and iron products as they are delivered to the project.

(c)(1) A State may request a waiver of the provisions of this section if;

(i) The application of those provisions would be inconsistent with the public interest; or

(ii) Steel and iron materials/products are not produced in the United States in sufficient and reasonably available quantities which are of a satisfactory quality.

(2) A request for waiver, accompanied by supporting information, must be submitted in writing to the Regional Federal Highway Administrator (RFHWA) through the FHWA Division Administrator. A request must be submitted sufficiently in advance of the need for the waiver in order to allow time for proper review and action on the request. The RFHWA will have approval authority on the request.

(3) Requests for waivers may be made for specific projects, or for certain materials or products in specific geographic areas, or for combinations of both, depending on the circumstances.

(4) The denial of the request by the RFHWA may be appealed by the State to the Federal Highway Administrator (Administrator), whose action on the request shall be considered administratively final.

(5) A request for a waiver which involves nationwide public interest or availability issues or more than one FHWA region may be submitted by the RFHWA to the Administrator for action.

(6) A request for waiver and an appeal from a denial of a request must include facts and justification to support the granting of the waiver. The FHWA response to a request or appeal will be in writing and made available to the public upon request. Any request for a nationwide waiver and FHWA's action on such a request may be published in the FEDERAL REGISTER for public comment.

(7) In determining whether the waivers described in paragraph (c)(1) of this section will be granted, the FHWA will consider all appropriate factors including, but not limited to, cost, administrative burden, and delay that would be imposed if the provision were not waived.

(d) Standard State and Federal-aid contract procedures may be used to assure compliance with the requirements of this section.

[48 FR 53104, Nov. 25, 1983, as amended at 49 FR 18821, May 3, 1984; 58 FR 38975, July 21, 1993]

November 25, 1983 Final Rule
uy America Requirements

DEPARTMENT OF TRANSPORTATION
Federal Highway Administration
AGENCY: Federal Highway Administration [FHWA], DOT.
23 CFR Part 635
Buy America Requirements
48 FR 53099
November 25, 1983

ACTION: Final rule.

SUMMARY: The Federal Highway Administration (FHWA) is amending its Buy America regulation to implement procedures required by section 165 of the Surface Transportation Assistance Act (STAA) 1982 (Pub. L. 97-424). Section 165 provides with exceptions that funds authorized for Federal-aid highway projects may not be obligated unless the steel, cement, and manufactured products used in such projects are produced in the United States. The amendments are based on a review of comments received in response to an interim final rule (January 17, 1983) (48 FR 1946) and to amendments to that interim final rule (May 26, 1983) (48 FR 23631) which were issued to temporarily implement section 165. The final rule provides for application of the revised Buy America provisions to steel and cement regardless of project cost. The waiver exempting manufactured products other than steel and cement contained in the January 17, 1983, interim final rule is retained.

EFFECTIVE DATE: The final rule is effective December 27, 1983.

FOR FURTHER INFORMATION CONTACT: Mr. P. E. Cunningham, Construction and Maintenance Division, (202) 426-0392, or Ms. Ruth R. Johnson, Office of the Chief Counsel, (202) 426-0781, Federal Highway Administration, 1200 New Jersey Avenue SE, Washington, D.C. 20590. Office hours are from 7:45 a.m. to 4:15 p.m. ET, Monday through Friday.

TEXT: SUPPLEMENTARY INFORMATION:

ground

The FHWA is issuing a final rule revising the existing Buy America regulation to implement procedures required by section 165 of the STAA of 1982. Section 165 provides that, with exceptions, funds authorized by the STAA of 1982, title 23 of the United States Code, the Urban Mass Transportation Act of 1964, or the STAA of 1978 may not be obligated for highway projects unless steel, cement, and manufactured products used in such projects are produced in the United States. The legislative language also requires Buy America to apply to all projects as opposed to previous provisions which only applied to projects costing more than $500,000. The STAA of 1982 also permits States to impose more stringent requirements than are imposed by section 165 and revises the total contract cost differential permitting the use of foreign materials from 10 percent to 25 percent.

An interim final rule was issued under emergency procedures on January 17, 1983, with an expiration date of September 30, 1983. Comments were requested on or before July 1, 1983. In that interim rule, the FHWA determined that it was in the public interest and not inconsistent with the legislative intent to temporarily waive the provisions of section 165 as they applied to manufactured products other than cement and steel, as well as to projects estimated to cost less than $450,000. On May 26, 1983, an amendment to the interim final rule was published in consideration of comments which had been received to that date. The primary change was elimination of the $450,000 threshold, thereby making the Buy America provisions applicable to all federally funded highway projects regardless of size. The comment period on the interim final rule as amended was extended to August 1, 1983. On September 30, 1983, an emergency regulation was published which extended the expiration date of the interim final rule as amended, from September 30, 1983, until the date a final rule becomes effective.

Analysis of Comments to the Docket

On August 1, when Docket 83-2 closed, FHWA had received in excess of 560 comments. Members of Congress, foreign governments, manufacturers, suppliers, contractors, State and local agencies, and other parties were represented among the commenters. The FHWA fully considered the issues raised by these commenters as it developed this final regulation.

The principal issues brought out in the docket were that the threshold should be eliminated or lowered, that asphalt should be opted in the final rule, and that Canadian clinker/cement imports should be permitted.

general, domestic manufacturers and suppliers agreed with the interim rule; while importers, users, and transporters of imported products, foreign governments and foreign suppliers believe that the regulation reduces competition, restricts free trade, and is inflationary. The issues raised by the commenters were considered in light of the intent of Congress and how

mplementation of a Buy America rule would affect the administering agencies, the construction industry, and the general public.

he commenters could be characterized as follows:

- Asphalt Paving Related Organizations -- 175 Commenters
- Steel Fabricators/Suppliers/Erectors -- 114 Commenters
- Ready-Mix Concrete Related Organizations/Cement Transporters -- 56 Commenters
- Domestic Steel Manufacturers/Associations -- 25 Commenters
- Private Citizens -- 18 Commenters
- Cast Iron Related Organizations -- 17 Commenters
- State and Local Highway Agencies/Governments -- 17 Commenters
- Oil Corporations/Refiners/Associations -- 15 Commenters
- Congressional Comments -- 45 Congressmen
- Domestic Cement Manufacturers -- 14 Commenters
- Prestressed Concrete Related Organizations -- 12 Commenters
- Others -- 82 Commenters

The following is a general discussion of the comments received in Docket 83-2:

I. Comments Regarding the $450,000 Threshold

Over 150 respondents commented on the FHWA decision, in the interim final rule published January 17, to temporarily waive the provisions of section 165 as they apply to projects estimated to cost less than $450,000. Most of the commenters on this issue objected to the $450,000 waiver with many noting that there was no legislative support for establishing any threshold of applicability. A number of respondents noted that limiting applicability of the Buy America provisions violates the letter and the spirit of the STAA of 1982.

Generally, respondents in favor of continuing the waiver included State and local highway agencies and groups representing foreign nations or foreign exporters. One of the State highway agencies commented that use of the $450,000 exclusion had been effective in holding down the cost of administering the Buy America regulations. Several commenters stated that the resource limitations of small local highway agencies would make the administration of the Buy America provisions difficult.

Respondents commenting on the waiver recommended a number of different threshold levels: 35 percent recommended total elimination; 20 percent favored a "drastically lower" threshold; 25 percent suggested placing the threshold at $50,000; 15 percent believe $100,000 is appropriate; and the remaining 5 percent suggested retaining the present $450,000 threshold level.

II. Comments Regarding Steel

Respondents who commented on steel related issues were generally concerned with prestressing strand.

A number of commenters, including State highway agencies and domestic manufacturers who produce strand from foreign high carbon steel rod, asked that prestressing strand be excluded from the list of steel products covered by Buy America provisions. Some of these commenters noted that the regulation should be concerned with the process of domestic manufacturing of prestressing strand from rod, rather than being concerned with the exclusive use of U.S. made rod. Other concerns included: disposition of current inventories; future availability of qualified strand; domestic manufacturers would raise prices and slow deliveries if foreign competition was excluded; strikes by domestic employees; and that elimination of some of the major manufacturers might cause supply problems in the event of an economic turnaround.

III. Comments Regarding Cement

Over 80 comments were received from respondents who were concerned with the extent of the Buy America provision as it applied to cement.

Many of the commenters in the northern States specifically asked for a waiver in section 165 to allow Canadian cement. These commenters included State highway agencies, ready-mix contractors, cement transporters and various concrete associations. They argued that: supply by the U.S. domestic cement industry is inconsistent and the Canadian cement industry has provided a stable source of cement; Canadian cement producers have major investments in the U.S. which contribute to local taxes, domestic employment, and local business activity for the purchase of equipment and maintenance; the cost of concrete would increase due to increased prices of the limited domestic cement; additional capital investments would be necessary for domestic concrete producers to handle and store this cement; exclusion of Canadian cement would

disrupt the market and alienate the Canadian producers who for years have been a very stabilizing influence; and, that it would create a hardship on domestic transporters of cement manufactured in Canada.

Domestic cement manufacturers welcomed the Buy America rule. A number of them stated that the regulation should specifically state that cement made in the U.S. does not include cement made with imported clinker.

Comments from domestic manufacturers regarding the importation of foreign cement or clinker indicated that a rise in imports at the expense of an under-utilized domestic capacity could well result in a problem similar to that of the U.S. steel industry attempting to compete against a flood of imports with existing domestic plants and equipment that are functionally obsolete. Approximately 90 percent of the production cycle is complete at the time the clinker has been produced and, therefore, 90 percent of the work force producing cement would be Canadians. Further they believed that the issues of public interest extend beyond the borders of an individual State. States should recognize in reviewing localized waiver requests that for every ton of Canadian clinker brought into this country, less work is available for American workers in the domestic cement industry.

IV. Comments Regarding Manufactured Products

A number of respondents objected to the waiver of the provisions of section 165 as they apply to manufactured products. The following comments were made: since American taxpayers are taxed to build highways, American industries should benefit; contractors should be compelled to use American made products or their bids should be rejected; the waiver is not in accord with the intent of Congress; the Buy America provisions should apply to construction machinery used on all projects funded by the STAA of 1982.

A number of respondents believe that the regulation should not allow imported manhole and drainage structure castings to be used on the new highway program. Their basis for this position was that the FHWA would be circumventing the intent of Congress; that there are a large number of foundries scattered throughout the United States with heavy inventories; and that cast metal products can arguably be defined as steel products within the intent of the legislation.

Because of administrative difficulties, several State highway agencies were opposed to the extension of the regulation to include manufactured products unless one of the following changes is made: (1) "Manufactured product" is defined so that only the final manufacturing process which produces a usable product is considered in the determination of foreign versus domestic character or (2), domestic items determined by the FHWA to be of inferior quality or in short supply should be excluded from the regulation or their application phased in to provide for development of domestic supplies. Several commenters noted that it is virtually impossible for a contracting agency to trace all components of some manufactured products incorporated into highway products; e.g.; signal controllers, glass for the signal heads, almost all electrical equipment, paints, and asphalt.

Comments were received from individual respondents interested in extending Buy America provisions to specific manufactured products; i.e., glass beads, pavement joint sealants, and wick drains. Comments were received from a number of respondents seeking to exempt certain specific manufactured products from Buy America provision based on considerations such as limited domestic availability. These products include fencing, ground rubber, laminated bridge bearings, and steel extrusions.

Miscellaneous comments concerning manufactured products included a recommendation that imported materials already in storage should not be subject to the Buy America regulation. Commenters also recommended that the regulation should exempt material originating in the U.S. which is shipped to a foreign country to undergo additional processing then returned for use in highway construction.

V. Comments Regarding Oil Products

Over 200 comments were received regarding the application of Buy America provisions to oil products. Virtually all the commenters (asphalt paving contractors and associations, State highway agencies, oil companies, etc.) asked that oil and/or petroleum products and/or asphalt be exempted from the final rule. Of those comments received on oil products, 20 percent of the respondents requested an exemption for foreign crude in the final rule; 30 percent of the respondents recommended exempting all petroleum products; approximately 15 percent of the respondents asked for a waiver for asphalt; and approximately 30 percent asked to exempt crude oil and component by-products. Less than 5 percent recommended including petroleum products and/or asphalt.

Respondents asked that the Buy America provisions be waived for crude oil products, noting that the eastern U.S. is almost entirely dependent upon foreign crude for asphalt and related petroleum products. They argued that a ban on the use of foreign crude oil would be counterproductive resulting in prohibitively high prices and the consumption of a disproportionate share of one of the United States' most valuable and rapidly diminishing natural resources.

A limited number of commenters, all oil companies or refiners, asked that petroleum products, in some fashion, be covered under Buy America provisions. Their comments noted that although the refining capacity of the U.S. is more than adequate to supply current requirements for asphalt and other highway project related products, insufficient amounts of crude oil are produced domestically to satisfy demand. These commenters believe that the waiver should therefore apply permanently to the crude oil component of asphalt or other petroleum products used in federally assisted projects, but not to the asphalt and other petroleum products.

VI. Miscellaneous Comments of Interest

Some commenters stated that the 25 percent preference insures that the STAA of 1982 will in fact reinforce American jobs, industry, and tax base, and will revitalize America's roads at the lowest "real" cost to the taxpayer.

Others commented that the allowance of a 25 percent or greater difference in the foreign bid versus native bid is inflationary and very counterproductive.

There was, however, a small number (less than 2 percent) of respondents who expressed philosophical opposition to the Buy America concept. These commenters included a State highway agency, foreign governments, contractors, equipment suppliers, a ready mix concrete association, and others. The comments basically noted that the use or non-use of foreign products should be left to the discretion of the States. They believed that because open trade between countries has been very beneficial in the past, it should not be ruled out completely as these provisions would do. The Canadian authorities view the Buy America provisions of the STAA as possibly in violation of the U.S. General Agreement on Tariffs and Trade (GATT). They believe that the Buy America provisions nullify and impair trade concessions which have been agreed to during multilateral GATT negotiations which the U.S. is obligated to observe. Given the economic climate in Canada, the Canadian authorities noted that this type of U.S. action will significantly add to pressure in Canada for similar protectionist measures.

Discussion of Revisions

A summary of the revisions to the existing provisions in 23 CFR 635.410 follows.

I. Exclusion of Manufactured Products

Most responses from product manufacturers recommended that manufactured products should be excluded from Buy America and/or expressed only a passing interest in the regulation. In evaluating the comments from manufacturers and suppliers who wanted to be covered, the indication was that they favored free trade agreements; however, they protested unfair practices such as foreign subsidized dumping, and foreign import restrictions. Government intervention may well be warranted to protect against these practices, but protectionism in terms of a Buy America regulation on all manufactured products would not serve this purpose.

The FHWA believes the message that Congress, State/local governments, and others sent was not to apply an all-inclusive Buy America rule. Although the earlier Buy America statute, section 401 of the STAA of 1978, provided that both unmanufactured and manufactured "articles, materials, and supplies" were covered under Buy America, the FHWA noted that only foreign structural steel could have a significant nationwide effect on the cost of Federal-aid highway construction projects. Therefore, FHWA determined it was in the public interest to apply section 401 only to structural steel. Section 165 of the STAA of 1982 reinforced congressional intent that Buy America should be applied to steel products. Section 165, however, also specifically cites cement products as covered for the first time and it does not apply at all to raw materials. With respect to manufactured products, Section 165 does not differ in its coverage from section 401 of the STAA of 1978. Since FHWA has never covered all manufactured products under its Buy America regulation and Congress did not specifically direct a change in that policy in enacting section 165, FHWA does not believe that all manufactured products must be covered.

Although asphalt use on Federal-aid highway construction is greater than cement and nearly equal to steel, many comments were received expressing support for an exemption for that manufactured product. It should be noted that the congressional debate on Section 165 was focused on the American steel and cement industries and little or no attention was given to the effect of the provision on the asphalt market [128 Cong. Rec. H8984-8990 (daily ed. December 6, 1982)]. A large number of congressional commenters pointed this out in urging an exemption for asphalt. The FHWA considered the minimal use and economic effect of applying Buy America to manufactured products other than asphalt and noted the potential administrative burdens to the State and contractors if those products were covered.

The materials and products other than steel, cement, asphalt, and natural materials comprise a small percent of the highway construction program. The FHWA agrees with the commenters who noted that it is very difficult to identify the various materials and then trace their origin. A manufactured product such as a traffic controller which has many components is particularly difficult to trace. For these reasons and because unfair practices or other specific problems can

be addressed by import laws such as title VII of the Tariff Act of 1930, as amended (19 U.S.C. 1671 et. seq.) (Imposition of Antidumping Duties), the FHWA finds that it is in the public interest to waive the application of Buy America to manufactured products other than steel and cement manufactured products.

Inclusion of Steel Products

Although Congress included steel, cement, and manufactured products in the STAA, the FHWA interim rule which was effective following enactment of the law on January 6 applied only to steel products and cement products. Previous provisions applied only to structural steel and a determination of foreign or domestic character was based upon the place of manufacture and on the origin of more than 50 percent of the components. The determination to include only structural steel was based in part on the word "substantially" in the language of Section 401 (1978-STAA).

By denoting "steel" in Section 165 (1982 STAA), Congress called attention to their intent to make the coverage more encompassing. The legislative history is also clear on this point. Congressional concern that Federal money spent to improve highways should also aid U.S. industry is apparent in the first sentence of Section 165 which requires the Secretary of Transportation to ensure that funds authorized for Federal-aid highway projects would only buy U.S. made steel. The FHWA therefore, has expanded the Buy America rule to include all steel products.

III. Inclusion of Cement Products

The issue of cement coverage under Buy America centered around imports from Canada. Over 90 percent of the letters received on this issue asked that Canadian cement/clinker imports be exempt from Buy America.

The FHWA recognizes that the U.S. plants which currently import clinker and grind that material into cement will have to change their operations if they desire to continue to be a supply source for Federal-aid highway projects. They can do this in several ways. For example, they can expand to perform all manufacturing processes in the U.S. or only use domestically produced clinker. As another alternative, they will be able to segregate their production of cement made from U.S. and non-U.S. clinker either by using separate facilities or producing in separate production runs. The existing domestic industry, which utilizes foreign imports, will have to make some adjustments, to avoid job displacements resulting from Buy America. However, those adjustments should not be major.

Several commenters were concerned that applying Buy America to cement would force concrete batch plants to separate their domestic and foreign cement storage or to use only domestic cement. FHWA does not believe the impact of this requirement will be great. Normally, if a large quantity of concrete will be needed, new batch plants are set up on the site or existing batch plants are dedicated to the project. Therefore, the commenters' concerns would be valid only to a small amount of cement. It is possible that, if a concrete supplier is unwilling to comply with the Buy America requirement by separating its foreign and domestic cement and is dependent on Federal-aid contracts for continued profitability, it could be economically injured. However, Section 165 specifically requires that only domestic produced cement shall be used on Federal-aid highway construction. The congressional debate on section 165 clearly refers to cement [128 Congressional Record S14772 (daily edition December 15, 1982)]. Segregated cement storage is the best way to assure that only domestic cement will be incorporated into the work and the minimal burden this imposes is fully warranted.

Congress was very specific in including the term "cement" in the Buy America rule and in stating that cement products must be produced in the United States. "Produced in the U.S." means that all manufacturing processes whereby a raw material is changed or transformed into an article which, because of the process, is different from the original product, must occur domestically. Congress intended that the funds authorized by the Act would mainly benefit American workers and that increasing the demand for U.S. cement products would help the cement industry. Congress fully recognized that there would be a cost to implementing this rule. Therefore, the shortage of cement in a particular geographical area cannot be used as a justification to allow imports if the material is available anywhere domestically and can be supplied at a reasonable cost differential.

The FHWA, therefore, has included comment products in the Buy America rule. It is noted that administrative procedures are provided in the final rule to apply waivers in accordance with the legislation to afford some relief in those instances where the cement product inclusion creates situations which are not in the public interest or where the cement product is not produced in the United States in sufficient and reasonably available quantities of satisfactory quality.

IV. Program Coverage

The final rule requires that steel products and cement products be produced domestically, and only those products which are brought to the construction site and permanently incorporated into the completed project are covered. Construction materials, forms, etc., which remain in place at the contractor's convenience, but are not required by the contract, are not covered.

To further define the coverage, a domestic product is a manufactured steel or cement construction material that was produced in one of the 50 States, the District of Columbia, Puerto Rico, or in the territories and possessions of the United States. Raw materials used in the steel and/or cement product may be imported. All manufacturing processes to produce steel and cement products must occur domestically. Raw materials are materials such as iron ore, limestone, waste products, slag used in cement/concrete, etc., which are used in the manufacturing process to produce the steel or cement products. Waste products would include scrap; i.e., steel no longer useful in its present form from old automobiles, machinery, pipe, railroad tracks and the like. Also steel trimmings from mills or product manufacturing are considered waste. Extracting, crushing, and handling the raw materials which is customary to prepare them for transporting are exempt from Buy America.

V. Threshold

The STAA of 1978 (Public Law 95-599), passed in November of 1978 covered projects whose total cost exceeded $500,000. When FHWA implemented the STAA of 1978, it exempted the Buy America provisions from projects estimated to cost less than $450,000. This allowed the construction cost to exceed the estimate by more than 10 percent before the total project cost would exceed $500,000, thus triggering application of the Act.

The STAA of 1982 did not include a threshold even though there exists legislative colloquy indicating it would be continued. The FHWA, however, retained the threshold from the existing regulation in the interim final rule, noting that it would eliminate the administrative burden of enforcing Buy America on a major percentage of highway projects of small size. Effective June 10, 1983, it was decided that for the remainder of the comment period and until the final rule was published that the threshold should be eliminated. It was hoped that information based on experience without a threshold could be obtained before the final rule was implemented.

The FHWA has determined that the administrative burden of including a Buy America provision in all contracts does not warrant the reimposition of a threshold. Also, although there in no conclusive information, FHWA believes that the contractors' documentation of compliance with Buy America for steel and cement does not place a significant burden on them. The FHWA has eliminated the threshold making Buy America applicable to all projects. However, it should be noted that the final rule does permit a very minimal use of foreign steel and cement. The purpose of this is to eliminate placing an administrative burden on the States for truly minor items.

Waivers

A State may request a waiver of the provisions of this section for specific projects and/or certain materials or products in specific locations. The basis for the request may be either a public interest finding or a determination that the product is not available domestically. An example of public interest would be a finding that applying Buy America would actually reduce rather than create jobs.

If the State finds, that a waiver request is warranted, it may document a justification for that waiver through the FHWA division office in its State and then to the Regional Federal Highway Administrator. There will be circumstances where a waiver should apply to an area larger than a region and possibly nationwide. In those cases, the Federal Highway Administrator will consider the merits of the problem and, if appropriate, approve a waiver which would afford uniform applications throughout the area affected. These cases would be forwarded to the Federal Highway Administrator by the Regional Administrator or arise when the Washington Headquarters ascertains that two regions may be acting on the same request.

VII. Compliance

The State's standard contract control procedures to assure that the contractor meets the terms of the contract shall be applicable to verify compliance with Buy America. It is presumed that a bidder who enters into a contract with a State agrees to comply with the Buy America provision. The States are expected to provide sufficient oversight to ensure compliance with the Buy America provisions. Penalties should be applied as may be appropriate in accordance with the standard State and Federal-aid procedures.

VIII. Legislative Changes

Section 165 sets forth two other requirements which supersede the previous requirements contained in section 401 of the 1978 STAA. The legislative language permits States to impose more stringent requirements than are imposed by section 165. Previously, only those State Buy America provisions which were in effect prior to the enactment of the STAA of 1978 were permitted. The STAA of 1982 also revises the total contract cost differential permitting the use of foreign materials from 10 percent to 25 percent. These two changes are incorporated into the final rule.

IX. Procedural Changes

The final rule implements three procedural changes from the interim final rule. The first involves confusion with the provisions in the STAA of 1982 which permit States to impose more stringent Buy America requirements than are contained in the Federal regulation.

Several comments were received which showed that this provision was being misunderstood. Specifically, State legislatures were considering "Buy-State materials and products preference" for Federal-aid highway work. Such a provision in Federal-aid contracts would be in violation of the longstanding prohibition contained in 23 CFR 635.409(a) against State restrictions on the use of articles or materials made or produced in any other State, territory, or possession of the United States. The issue addressed in section 165 of the STAA of 1982 is that certain materials must be produced in the United States rather than in foreign countries. This is obvious from the inclusion of the words "foreign countries" in the aforementioned provision regarding more stringent State requirements. Section 635.410(a) is being revised to clarify this matter.

The second procedural change is necessary to clarify the application of the alternate bid provisions. The previous regulation required alternate bids for foreign and domestic structural steel. Since the STAA of 1982 permits States to impose more stringent Buy America requirements than are imposed by section 165, it has been pointed out that a State could elect to prohibit the use of foreign steel or cement even on projects which could allow alternate bids under Section 635.410(b)(3). Therefore, the final rule is simplified by replacing the alternate bid requirements with a statement that alternate bids for foreign and domestic materials may be included on any Federal-aid highway project at the State's election. The FHWA still encourages States to consider alternate bids on projects where foreign materials are likely to be competitive even with the 25 percent cost differential.

Third, Section 635.410(b)(2) has been deleted. The paragraph has provided that certification acceptance (CA) procedures would apply to the Buy America provisions. However, section 165 of the STAA of 1982 is not incorporated into title 23 U.S.C. to which CA is applicable.

The FHWA has determined that this document does not contain a major rule under Executive Order 12291. However, under the regulatory policies and procedures of the DOT, this rulemaking action is considered significant based on the public interest involved.

A regulatory evaluation/regulatory flexibility assessment has been prepared and is available for review in the public docket. A copy may be obtained by contacting Mr. P. E. Cunningham at the address provided under the heading "FOR FURTHER INFORMATION CONTACT." The FHWA has determined that this action will not have a significant economic impact on a substantial number of small entities based upon the evaluation prepared.

List of Subjects in 23 CFR Part 635

Buy America, Government contracts, Grants programs -- transportation, Highways and roads.

In consideration of the foregoing, and under the authority of 23 U.S.C. 315, section 165, STAA of 1982, Pub. L. 97-424, 96 Stat. 2136, and 49 CFR 1.48(b), the FHWA amends Part 635, Subpart D, by revising Section 635.410 of 23 CFR to read as set forth below.

(Catalog of Federal Domestic Assistance Program Number 20.205, Highway Research, Planning and Construction. The regulations implementing Executive Order 12372 regarding intergovernmental consultation on Federal programs and activities apply to this program)

Issued on November 21, 1983.
R. A. Barnhart,
Administrator, Federal Highway Administration.

PART 635 -- [AMENDED]

Section 635.410 Buy America requirements.

a. The provisions of this section shall prevail and be given precedence over any requirements of this subpart which are contrary to this section. However, nothing in this section shall be construed to be contrary to the requirements of Section 635.409(a) of this subpart.

No Federal-aid highway construction project is to be authorized for advertisement or otherwise authorized to proceed unless at least one of the following requirements is met:

1. The project either: (i) Includes no permanently incorporated steel or (ii) if cement or steel materials are to be used, all manufacturing processes for these materials must occur in the United States.

2. The State has standard contract provisions that require the use of domestic materials and products, including cement and steel materials, to the same or greater extent as the provisions set forth in this section.
3. The State elects to include alternate bid provisions for foreign and domestic steel and/or cement materials which comply with the following requirements. Any procedure for obtaining alternate bids based on furnishing foreign steel and/or cement materials which is acceptable to the Division Administrator may be used. The contract provisions must (i) require all bidders to submit a bid based on furnishing domestic steel and/or cement materials, and (ii) clearly state that the contract will be awarded to the bidder who submits the lowest total bid based on furnishing domestic steel and/or cement materials unless such total bid exceeds the lowest total bid based on furnishing foreign steel and/or cement materials by more than 25 percent.
4. When cement and steel materials are used in a project, the requirements of this section do not prevent a minimal use of foreign cement and steel materials, if the cost of such materials used does not exceed one-tenth of one percent (0.1 percent) of the total contract cost or $2,500, whichever is greater. For purposes of this paragraph, the cost is that shown to be the value of the steel and/or cement products as they are delivered to the project.

c.

1. A State may request a waiver of the provisions of this section if;
   i. The application of those provisions would be inconsistent with the public interest; or
   ii. Steel and cement materials/products are not produced in the United States in sufficient and reasonably available quantities which are of a satisfactory quality.
2. A request for waiver, accompanied by supporting information, must be submitted in writing to the Regional Federal Highway Administrator (RFHWA) through the FHWA Division Administrator. A request must be submitted sufficiently in advance of the need for the waiver in order to allow time for proper review and action on the request. The RFHWA will have approval authority on the request.
3. Requests for waivers may be made for specific projects, or for certain materials or products in specific geographic areas, or for combinations of both, depending on the circumstances.
4. The denial of the request by the RFHWA may be appealed by the State to the Federal Highway Administrator (Administrator), whose action on the request shall be considered administratively final.
5. A request for a waiver which involves nationwide public interest or availability issues or more than one FHWA region may be submitted by the RFHWA to the Administrator for action.
6. A request for waiver and an appeal from a denial of a request must include facts and justification to support the granting of the waiver. The FHWA response to a request or appeal will be in writing and made available to the public upon request. Any request for a nationwide waiver and FHWA's action on such a request may be published in the Federal Register for public comment.
7. In determining whether the waivers described in paragraph (c)(1) of this section will be granted, the FHWA will consider all appropriate factors including, but not limited to, cost, administrative burden, and delay that would be imposed if the provision were not waived.

d. Standard State and Federal-aid contract procedures may be used to assure compliance with the requirements of this section.

(23 U.S.C. 315; sec. 165, Surface Transportation Assistance Act of 1982, Pub. L. 97-424, 96 Stat. 2097; 49 CFR 1.48(b).

[FR Doc. 83-31656 Filed 11-23-83; 8:45 am]

DOCUMENT 00852

CHANGED CONDITION CLAUSES

23 CFR § 635.109
Standardized Changed Condition Clauses

(a) Except as provided in paragraph (b) of this section, the following changed conditions contract clauses shall be made part of, and incorporated in, each highway construction project approved under 23 U.S.C. 106:

(1) *Differing site conditions.*

(i) During the progress of the work, if subsurface or latent physical conditions are encountered at the site differing materially from those indicated in the contract or if unknown physical conditions of an unusual nature, differing materially from those ordinarily encountered and generally recognized as inherent in the work provided for in the contract, are encountered at the site, the party discovering such conditions shall promptly notify the other party in writing of the specific differing conditions before the site is disturbed and before the affected work is performed.

(ii) Upon written notification, the engineer will investigate the conditions, and if it is determined that the conditions materially differ and cause an increase or decrease in the cost or time required for the performance of any work under the contract, an adjustment, excluding anticipated profits, will be made and the contract modified in writing accordingly. The engineer will notify the contractor of the determination whether or not an adjustment of the contract is warranted.

(iii) No contract adjustment which results in a benefit to the contractor will be allowed unless the contractor has provided the required written notice

(iv) No contract adjustment will be allowed under this clause for any effects caused on unchanged work. (This provision may be omitted by the STD's at their option.)

(2) *Suspensions of work ordered by the engineer.*

(i) If the performance of all or any portion of the work is suspended or delayed by the engineer in writing for an unreasonable period of time (not originally anticipated, customary, or inherent to the construction industry) and the contractor believes that additional compensation and/or contract time is due as a result of such suspension or delay, the contractor shall submit to the engineer in writing a request for adjustment within 7 calendar days of receipt of the notice to resume work. The request shall set forth the reasons and support for such adjustment.

(ii) Upon receipt, the engineer will evaluate the contractor's request. If the engineer agrees that the cost and/or time required for the performance of the contract has increased as a result of such suspension and the suspension was caused by conditions beyond the control of and not the

fault of the contractor, its suppliers, or subcontractors at any approved tier, and not caused by weather, the engineer will make an adjustment (excluding profit) and modify the contract in writing accordingly. The contractor will be notified of the engineer's determination whether or not an adjustment of the contract is warranted.

(iii) No contract adjustment will be allowed unless the contractor has submitted the request for adjustment within the time prescribed.

(iv) No contract adjustment will be allowed under this clause to the extent that performance would have been suspended or delayed by any other cause, or for which an adjustment is provided or excluded under any other term or condition of this contract.

(3) *Significant changes in the character of work.*

(i) The engineer reserves the right to make, in writing, at any time during the work, such changes in quantities and such alterations in the work as are necessary to satisfactorily complete the project. Such changes in quantities and alterations shall not invalidate the contract nor release the surety, and the contractor agrees to perform the work as altered.

(ii) If the alterations or changes in quantities significantly change the character of the work under the contract, whether such alterations or changes are in themselves significant changes to the character of the work or by affecting other work cause such other work to become significantly different in character, an adjustment, excluding anticipated profit, will be made to the contract. The basis for the adjustment shall be agreed upon prior to the performance of the work. If a basis cannot be agreed upon, then an adjustment will be made either for or against the contractor in such amount as the engineer may determine to be fair and equitable.

(iii) If the alterations or changes in quantities do not significantly change the character of the work to be performed under the contract, the altered work will be paid for as provided elsewhere in the contract.

(iv) The term "significant change" shall be construed to apply only to the following circumstances:

(A) When the character of the work as altered differs materially in kind or nature from that involved or included in the original proposed construction; or

(B) When a major item of work, as defined elsewhere in the contract, is increased in excess of 125 percent or decreased below 75 percent of the original contract quantity. Any allowance for an increase in quantity shall apply only to that portion in excess of 125 percent of original contract item quantity, or in case of a decrease below 75 percent, to the actual amount of work performed.

(b) The provisions of this section shall be governed by the following:

(1) Where State statute does not permit one or more of the contract clauses included in paragraph (a) of this section, the State statute shall prevail and such clause or clauses need not be made applicable to Federal-aid highway contracts.

(2) Where the State transportation department has developed and implemented one or more of the contract clauses included in paragraph (a) of this section, such clause or clauses, as developed by the State transportation department may be included in Federal-aid highway contracts in lieu of the corresponding clause or clauses in paragraph (a) of this section. The State's action must be pursuant to a specific State statute requiring differing contract conditions clauses. Such State developed clause or clauses, however, must be in conformance with 23 U.S.C., 23 CFR and other applicable Federal statutes and regulations as appropriate and shall be subject to the Division Administrator's approval as part of the PS&E.

(c) In the case of a design-build project, STDs are strongly encouraged to use "suspensions of work ordered by the engineer" clauses, and may consider "differing site condition" clauses and "significant changes in the character of work" clauses which are appropriate for the risk and responsibilities that are shared with the design-builder.

[56 FR 37004, Aug. 2, 1991; 57 FR 10062, Mar. 23, 1992, as amended at 67 FR 75925, Dec. 10, 2002]

Document 00910

ADDENDUM NO. _____

Date of Addendum: ____________________
****Enter date by hand when signed for release****

PROJECT NAME: Missouri Kansas Texas (MKT) Trail Spur Connector

PROJECT NO: WBS No. N-320420-030A-4 / CSJ 0912-72-299

BID DATE: December 17, 2015 (There is no change to the Bid Date.)

FROM: J. Timothy Lincoln, P.E., City Engineer
City of Houston, Department of Public Works and Engineering
611 Walker Street
Houston, Texas 77002
Attn: *Raymond Fong*, Project Manager

TO: Prospective Bidders

This Addendum forms a part of the Bidding Documents and will be incorporated into the Contract documents, as applicable. Insofar as the original Project Manual and Drawings are inconsistent, this Addendum governs.

****

Use the following heading and select the appropriate wording for postponement of the Bid Date. Delete the statement beside Bid Date above which indicates that the Bid Date is unchanged. If change in Bid Date, issue as separate addendum. Delete this section entirely if there is no change in Bid Date.

****

CHANGE IN BID DATE

The Bid Date for this Project has been changed from ____________ (Date) to ____________ (Date). [Time of day and place for submittal of bid remains the same]. [Time of submittal has been changed from ____________ (Time) to ____________ (Time). The place for submittal remains the same].

****[OR]****

The bid date for this project has been indefinitely postponed.

****

Delete the following paragraph if the sole purpose of the Addendum is to postpone the Bid Date.

****

This Addendum uses the change page method: remove and replace or add pages, or Drawing sheets, as directed in the change instructions below. Change bars (|) are provided in the outside margins of pages from the Project Manual to indicate where changes have been made; no change bars are provided in added Sections. Reissued Drawing Sheets show the Addendum number below the title block and changes in the Drawing are noted by a revision mark and enclosed in a revision cloud.

****

Number each item of the Addendum beginning with 1 through the total number of change items in the Addendum. Sample entries are provided in brackets.

****

CHANGES TO PREVIOUS ADDENDA

****

Reference Addendum Number and item number to correct clarifications or make minor corrections of changes issued by previous Addenda.

****

ADDENDUM NO. _____

[1. Item 5. Change to read as follows:]

CHANGES TO PROJECT MANUAL

****

Follow this format to sequence changes to the Project Manual.

****

BIDDING REQUIREMENTS

****

Give the individual change instructions for each item of change by Document number and title. List changes in order of Document number.

****

[2. Document 00020 - Notice to Bidders. Replace page 00020-2.]

CONTRACT FORMS

[3. Document 00610 - Replace revised Performance Bond, page 00610-1.]

CONDITIONS OF THE CONTRACT

[4. Document 00800 - Supplementary Conditions. Replace page 00800-4 and add page 00800-5.]

SPECIFICATIONS

[5. Section 02050 - Demolition. Add section including pages 02050-1 through 02050-3.]

CHANGES TO DRAWINGS

[6. Delete Sheet S-9, Beam Schedule, and replace with Sheet S-9-A.]

CLARIFICATIONS

[7. Document 00210 - Supplementary Instructions to Bidders states that no substitutions will be considered during the bidding phase. Substitutions will be considered during the first 15 percent of the Contract Time or first 90 days of the Contract, whichever is less, as stated in Document 00700 - General Conditions.]

END OF ADDENDUM NO. ____

DATED: _____

Ravi Kaleyatodi, P.E., CPM
Senior Assistant Director
Department of Public Works and Engineering

RK:MS:RF:sdd

END OF DOCUMENT

Document 00911

NOTICE OF
ADDENDUM NO. _____

Date of Addendum: _____

PROJECT NAME: Missouri Kansas Texas Trail Spur Connector

PROJECT NO: WBS No. N-320420-030A-4, TXDOT CSJ No. 0912-72-299

BID DATE: [Bid Date] (There is no change to the Bid Date.)

FROM: [Assistant Director's Name], [AD's Title]
City of Houston, [Contracting Department]
[Street Address of Contracting Department]
Houston, Texas [Zip Code]
Attn: _____, Project Manager

TO: Prospective Bidders

CHANGE IN BID DATE

The Bid Date for this Project has been changed from _____ (Date) to _____ (Date).
[Time of day and place for submittal of bid remains the same]. [Time of submittal has been changed from _____ (Time) to _____ (Time). The place for submittal remains the same].

This Addendum includes:

ADDENDUM SYNOPSIS

Changes to Previous Addendum
Changes to Project Manual
- Bidding Requirements
- Contract Forms
- Condition of the Contract
- Specifications

Changes to Drawings
Clarifications

DATED: _____
[Assistant Director]
[AD's Title]
[Contracting Department]

END OF DOCUMENT

Document 00912

RIDER NO. _____

PROJECT NAME: Missouri Kansas Texas (MKT) Trail Spur Connector

PROJECT NO: N-320420-030A-4 / CSJ 0912-72-299

This Rider is incorporated into the Contract documents. In the event of a conflict with the original Contract documents, this Rider governs.

CHANGES TO PROJECT MANUAL

END OF RIDER NO. _____

DATED: _____ _____
Director of [*Contracting Department*]

DATED: _____ _____
Contractor

END OF DOCUMENT

Document 00912

RIDER NO. _____

PROJECT NAME: Missouri Kansas Texas Trail Spur Connector

PROJECT NO: WBS No. N-320420-030A-4, TXDOT CSJ No. 0912-72-299

This Rider is incorporated into the Contract documents. In the event of a conflict with the original Contract documents, this Rider governs.

CHANGES TO PROJECT MANUAL

END OF RIDER NO. _____

DATED: _____ _____
Director of [Contracting Department]

DATED: _____ _____
Contractor

END OF DOCUMENT

Document 00931

REQUEST FOR INFORMATION

1. PROJECT No.: WBS No.N-320420-030A-4, CSJ 0912-72-299
2. RFI No.: _____
3. PROJECT NAME: Missouri Kansas Texas Trail Spur Connector
4. CONTRACTOR: _____
5. CONTRACT No.: _____
6. SPECIFICATION Nos.: _____
7. DRAWING Nos.: _____
8. RESPONSE CODE: [_] CRITICAL [_] ROUTINE 9.DATE RESPONSE REQUIRED: _____
10. INFORMATION REQUIRED:

11. _____ _____
CONTRACTOR (Signature) TITLE DATE

12. RESPONSE:

13. _____ _____
PROJECT MANAGER (Signature) DATE

14. If Contractor believes the response given in Item 12 requires an adjustment in Contract Price or Contract Time, Contractor shall submit a timely proposal so as not to delay Contractor's Work in accordance with General Conditions, Article 7 - Changes in the Work.

END OF DOCUMENT

Special Provision to Item 000
Schedule of Liquidated Damages

Table1
Schedule of Liquidated Damages

For Dollar Amount of Original Contract		Dollar Amount of Daily Contract Administration Liquidated Damages per Working Day
From More Than	To and Including	
0	100,000	**570**
100,000	500,000	**590**
500,000	1,000,000	**610**
1,000,000	1,500,000	**685**
1,500,000	3,000,000	**785**
3,000,000	5,000,000	**970**
5,000,000	10,000,000	**1125**
10,000,000	20,000,000	**1285**
20,000,000	Over 20,000,000	**2590**

Special Provision to Item 000
Nondiscrimination

1. DESCRIPTION

All recipients of federal financial assistance are required to comply with various nondiscrimination laws including Title VI of the Civil Rights Act of 1964, as amended, (Title VI). Title VI forbids discrimination against anyone in the United States on the grounds of race, color, or national origin by any agency receiving federal funds.

Texas Department of Transportation, as a recipient of Federal financial assistance, and under Title VI and related statutes, ensures that no person shall on the grounds of race, religion (where the primary objective of the financial assistance is to provide employment per 42 U.S.C. § 2000d-3), color, national origin, sex, age or disability be excluded from participation in, be denied the benefits of, or otherwise be subjected to discrimination under any Department programs or activities.

2. DEFINITION OF TERMS

Where the term "Contractor" appears in the following six nondiscrimination clauses, the term "Contractor" is understood to include all parties to Contracts or agreements with the Texas Department of Transportation.

3. NONDISCRIMINATION PROVISIONS

During the performance of this Contract, the Contractor, for itself, its assignees, and successors in interest (hereinafter referred to as the "Contractor") agrees as follows:

3.1. **Compliance with Regulations**. The Contractor (hereinafter includes consultants) will comply with the Acts and the Regulations relative to Nondiscrimination in Federally-assisted programs of the U.S. Department of Transportation, the Federal Highway Administration, as they may be amended from time to time, which are herein incorporated by reference and made a part of this Contract.

3.2. **Nondiscrimination**. The Contractor, with regard to the work performed by it during the Contract, will not discriminate on the grounds of race, color, or national origin in the selection and retention of subcontractors, including procurements of materials and leases of equipment. The Contractor will not participate directly or indirectly in the discrimination prohibited by the Acts and the Regulations, including employment practices when the Contract covers any activity, project, or program set forth in Appendix B of 49 CFR Part 21.

3.3. **Solicitations for Subcontracts, Including Procurements of Materials and Equipment:** In all solicitations, either by competitive bidding, or negotiation made by the Contractor for work to be performed under a subcontract, including procurements of materials, or leases of equipment, each potential subcontractor or supplier will be notified by the Contractor of the Contractor's obligations under this Contract and the Acts and the Regulations relative to Nondiscrimination on the grounds of race, color, or national origin.

3.4. **Information and Reports:** The Contractor will provide all information and reports required by the Acts, the Regulations, and directives issued pursuant thereto and will permit access to its books, records, accounts, other sources of information, and its facilities as may be determined by the Recipient or the Federal Highway Administration to be pertinent to ascertain compliance with such Acts, Regulations, and instructions. Where any information required of a Contractor is in the exclusive possession of another who fails or refuses to furnish the information, the Contractor will so certify to the Recipient or the Federal Highway Administration, as appropriate, and will set forth what efforts it has made to obtain the information.

3.5. **Sanctions for Noncompliance**. In the event of a Contractor's noncompliance with the Nondiscrimination provisions of this Contract, the Recipient will impose such Contract sanctions as it or the Federal Highway Administration may determine to be appropriate, including, but not limited to:

- withholding payments to the Contractor under the Contract until the Contractor complies, and/or
- cancelling, terminating, or suspending a Contract, in whole or in part.

3.6. **Incorporation of Provisions**. The Contractor will include the provisions of paragraphs (3.1) through (3.6) in every subcontract, including procurements of materials and leases of equipment, unless exempt by the Acts, the Regulations, and directives issued pursuant thereto. The Contractor will take action with respect to any subcontract or procurement as the Recipient or the Federal Highway Administration may direct as a means of enforcing such provisions including sanctions for noncompliance. Provided, that if the Contractor becomes involved in, or is threatened with litigation by a subcontractor, or supplier because of such direction, the Contractor may request the Recipient to enter into any litigation to protect the interests of the Recipient. In addition, the Contractor may request the United States to enter into the litigation to protect the interests of the United States.

4. PERTINENT NONDISCRIMINATION AUTHORITIES:

During the performance of this Contract, the Contractor, for itself, its assignees, and successors in interest (hereinafter referred to as the "Contractor") agrees to comply with the following nondiscrimination statutes and authorities; including but not limited to:

4.1. Title VI of the Civil Rights Act of 1964 (42 U.S.C. § 2000d et seq., 78 stat. 252), (prohibits discrimination on the basis of race, color, national origin); and 49 CFR Part 21.

4.2. The Uniform Relocation Assistance and Real Property Acquisition Policies Act of 1970, (42 U.S.C. § 4601), (prohibits unfair treatment of persons displaced or whose property has been acquired because of Federal or Federal-aid programs and projects);

4.3. Federal-Aid Highway Act of 1973, (23 U.S.C. § 324 et seq.), (prohibits discrimination on the basis of sex);

4.4. Section 504 of the Rehabilitation Act of 1973, (29 U.S.C. § 794 et seq.), as amended, (prohibits discrimination on the basis of disability); and 49 CFR Part 27;

4.5. The Age Discrimination Act of 1975, as amended, (42 U.S.C. § 6101 et seq.), (prohibits discrimination on the basis of age);

4.6. Airport and Airway Improvement Act of 1982, (49 U.S.C. § 4 71, Section 4 7123), as amended, (prohibits discrimination based on race, creed, color, national origin, or sex);

4.7. The Civil Rights Restoration Act of 1987, (PL 100-209), (Broadened the scope, coverage and applicability of Title VI of the Civil Rights Act of 1964, The Age Discrimination Act of 1975 and Section 504 of the Rehabilitation Act of 1973, by expanding the definition of the terms "programs or activities" to include all of the programs or activities of the Federal-aid recipients, subrecipients and Contractors, whether such programs or activities are Federally funded or not);

4.8. Titles II and III of the Americans with Disabilities Act, which prohibit discrimination on the basis of disability in the operation of public entities, public and private transportation systems, places of public accommodation, and certain testing entities (42 U.S.C. §§ 12131-12189) as implemented by Department of Transportation regulations at 49 C.F.R. parts 37 and 38;

4.9. The Federal Aviation Administration's Nondiscrimination statute (49 U.S.C. § 47123) (prohibits discrimination on the basis of race, color, national origin, and sex);

4.10. Executive Order 12898, Federal Actions to Address Environmental Justice in Minority Populations and Low-Income Populations, which ensures discrimination against minority populations by discouraging programs, policies, and activities with disproportionately high and adverse human health or environmental effects on minority and low-income populations;

4.11. Executive Order 13166, Improving Access to Services for Persons with Limited English Proficiency, and resulting agency guidance, national origin discrimination includes discrimination because of limited English proficiency (LEP). To ensure compliance with Title VI, you must take reasonable steps to ensure that LEP persons have meaningful access to your programs (70 Fed. Reg. at 74087 to 74100);

4.12. Title IX of the Education Amendments of 1972, as amended, which prohibits you from discriminating because of sex in education programs or activities (20 U .S.C. 1681 et seq).

Special Provision to Item 000
Certification of Nondiscrimination in Employment

1. GENERAL

By signing this proposal, the Bidder certifies that he has participated in a previous contract or subcontract subject to the equal opportunity clause, as required by Executive Orders 10925, 11114, or 11246, or if he has not participated in a previous contract of this type, or if he has had previous contract or subcontracts and has not filed, he will file with the Joint Reporting Committee, the Director of the Office of Federal Contract Compliance, a Federal Government contracting or administering agency, or the former President's Committee on Equal Employment Opportunity, all reports due under the applicable filing requirements.

Note—The above certification is required by the Equal Employment Opportunity Regulations of the Secretary of Labor (41 CFR 60-1.7(b)(1)), and must be submitted by Bidders and proposed subcontractors only in connection with contracts and subcontracts which are subject to the equal opportunity clause. Contracts and subcontracts which are exempt from the equal opportunity clause are set forth in 41 CFR 60-1.5. (Generally only contracts or subcontracts of $10,000 or under are exempt.)

Currently, Standard Form 100 (EEO-1) is the only report required by the Executive Orders or their implementing regulations.

Proposed prime contractors and subcontractors who have participated in a previous contract or subcontract subject to the Executive Orders and have not filed the required reports should note that 41 CFR 60-1.7(b)(1) prevents the award of contracts and subcontracts unless such contractor submits a report covering the delinquent period or such other period specified by the Federal Highway Administration or by the Director, Office of Federal Contract Compliance, U.S. Department of Labor.

Special Provision to Item 000

Notice of Requirement for Affirmative Action to Ensure Equal Employment Opportunity (Executive Order 11246)

1. GENERAL

In addition to the affirmative action requirements of the Special Provision titled "Standard Federal Equal Employment Opportunity Construction Contract Specifications" as set forth elsewhere in this proposal, the Bidder's attention is directed to the specific requirements for utilization of minorities and females as set forth below.

2. GOALS

2.1. Goals for minority and female participation are hereby established in accordance with 41 CFR 60-4.

2.2. The goals for minority and female participation expressed in percentage terms for the Contractor's aggregate work force in each trade on all construction work in the covered area are as follows:

Goals for minority participation in each trade, %	Goals for female participation in each trade, %
See Table 1	6.9

2.3. These goals are applicable to all the Contractor's construction work (whether or not it is Federal or federally assisted) performed in the covered area. If the Contractor performs construction work in a geographical area located outside of the covered area, it will apply the goals established for such geographical area where the work is actually performed. With regard to this second area, the Contractor also is subject to the goals for both its federally involved and non-federally involved construction. The Contractor's compliance with the Executive Order and the regulations in 41 CFR Part 60-4 will be based on its implementation of the Standard Federal Equal Employment Opportunity Construction Contract Specifications Special Provision and its efforts to meet the goals. The hours of minority and female employment and training must be substantially uniform throughout the length of the Contract, and in each trade, and the Contractor must make a good faith effort to employ minorities and women evenly on each of its projects. The transfer of minority and female employees or trainees from Contractor to Contractor or from project to project for the sole purpose of meeting the Contractor's goals will be a violation of the Contract, the Executive Order and the regulations in 41 CFR Part 60-4. Compliance with the goals will be measured against the total work hours performed.

2.4. A Contractor or subcontractor will be considered in compliance with these provisions by participation in the Texas Highway-Heavy Branch, AGC, Statewide Training and Affirmative Action Plan. Provided that each Contractor or subcontractor participating in this plan must individually comply with the equal opportunity clause set forth in 41 CFR 60-1.4 and must make a good faith effort to achieve the goals set forth for each participating trade in the plan in which it has employees. The overall good performance of other Contractors and subcontractors toward a goal in an approved plan does not excuse any covered Contractor's or subcontractor's failure to make good faith efforts to achieve the goals contained in these provisions. Contractors or subcontractors participating in the plan must be able to demonstrate their participation and document their compliance with the provisions of this Plan.

3. SUBCONTRACTING

The Contractor must provide written notification to the Department within 10 working days of award of any construction subcontract in excess of $10,000 at any tier for construction work under the Contract resulting from this solicitation pending concurrence of the Department in the award. The notification will list the names,

address and telephone number of the subcontractor; employer identification number; estimated dollar amount of the subcontract; estimated starting and completion dates of the subcontract; and the geographical area in which the Contract is to be performed.

4. COVERED AREA

As used in this special provision, and in the Contract resulting from this solicitation, the geographical area covered by these goals for female participation is the State of Texas. The geographical area covered by these goals for other minorities are the counties in the State of Texas as indicated in Table 1.

5. REPORTS

The Contractor is hereby notified that he may be subject to the Office of Federal Contract Compliance Programs (OFCCP) reporting and record keeping requirements as provided for under Executive Order 11246 as amended. OFCCP will provide direct notice to the Contractor as to the specific reporting requirements that he will be expected to fulfill.

Table 1
Goals for Minority Participation

County	Participation, %	County	Participation, %
Anderson	22.5	Chambers	27.4
Andrews	18.9	Cherokee	22.5
Angelina	22.5	Childress	11.0
Aransas	44.2	Clay	12.4
Archer	11.0	Cochran	19.5
Armstrong	11.0	Coke	20.0
Atascosa	49.4	Coleman	10.9
Austin	27.4	Collin	18.2
Bailey	19.5	Collingsworth	11.0
Bandera	49.4	Colorado	27.4
Bastrop	24.2	Comal	47.8
Baylor	11.0	Comanche	10.9
Bee	44.2	Concho	20.0
Bell	16.4	Cooke	17.2
Bexar	47.8	Coryell	16.4
Blanco	24.2	Cottle	11.0
Borden	19.5	Crane	18.9
Bosque	18.6	Crockett	20.0
Bowie	19.7	Crosby	19.5
Brazoria	27.3	Culberson	49.0
Brazos	23.7	Dallam	11.0
Brewster	49.0	Dallas	18.2
Briscoe	11.0	Dawson	19.5
Brooks	44.2	Deaf Smith	11.0
Brown	10.9	Delta	17.2
Burleson	27.4	Denton	18.2
Burnet	24.2	DeWitt	27.4
Caldwell	24.2	Dickens	19.5
Calhoun	27.4	Dimmit	49.4
Callahan	11.6	Donley	11.0
Cameron	71.0	Duval	44.2
Camp	20.2	Eastland	10.9
Carson	11.0	Ector	15.1
Cass	20.2	Edwards	49.4
Castro	11.0	Ellis	18.2

County	Participation, %	County	Participation, %
El Paso	57.8	Kenedy	44.2
Erath	17.2	Kent	10.9
Falls	18.6	Kerr	49.4
Fannin	17.2	Kimble	20.0
Fayette	27.4	King	19.5
Fisher	10.9	Kinney	49.4
Floyd	19.5	Kleberg	44.2
Foard	11.0	Knox	10.9
Fort Bend	27.3	Lamar	20.2
Franklin	17.2	Lamb	19.5
Freestone	18.6	Lampasas	18.6
Frio	49.4	LaSalle	49.4
Gaines	19.5	Lavaca	27.4
Galveston	28.9	Lee	24.2
Garza	19.5	Leon	27.4
Gillespie	49.4	Liberty	27.3
Glasscock	18.9	Limestone	18.6
Goliad	27.4	Lipscomb	11.0
Gonzales	49.4	Live Oak	44.2
Gray	11.0	Llano	24.2
Grayson	9.4	Loving	18.9
Gregg	22.8	Lubbock	19.6
Grimes	27.4	Lynn	19.5
Guadalupe	47.8	Madison	27.4
Hale	19.5	Marion	22.5
Hall	11.0	Martin	18.9
Hamilton	18.6	Mason	20.0
Hansford	11.0	Matagorda	27.4
Hardeman	11.0	Maverick	49.4
Hardin	22.6	McCulloch	20.0
Harris	27.3	McLennan	20.7
Harrison	22.8	McMullen	49.4
Hartley	11.0	Medina	49.4
Haskell	10.9	Menard	20.0
Hays	24.1	Midland	19.1
Hemphill	11.0	Milam	18.6
Henderson	22.5	Mills	18.6
Hidalgo	72.8	Mitchell	10.9
Hill	18.6	Montague	17.2
Hockley	19.5	Montgomery	27.3
Hood	18.2	Moore	11.0
Hopkins	17.2	Morris	20.2
Houston	22.5	Motley	19.5
Howard	18.9	Nacogdoches	22.5
Hudspeth	49.0	Navarro	17.2
Hunt	17.2	Newton	22.6
Hutchinson	11.0	Nolan	10.9
Irion	20.0	Nueces	41.7
Jack	17.2	Ochiltree	11.0
Jackson	27.4	Oldham	11.0
Jasper	22.6	Orange	22.6
Jeff Davis	49.0	Palo Pinto	17.2
Jefferson	22.6	Panola	22.5
Jim Hogg	49.4	Parker	18.2
Jim Wells	44.2	Parmer	11.0
Johnson	18.2	Pecos	18.9
Jones	11.6	Polk	27.4
Karnes	49.4	Potter	9.3
Kaufman	18.2	Presidio	49.0
Kendall	49.4	Randall	9.3

County	Participation, %	County	Participation, %
Rains	17.2	Reagan	20.0
Real	49.4	Throckmorton	10.9
Red River	20.2	Titus	20.2
Reeves	18.9	Tom Green	19.2
Refugio	44.2	Travis	24.1
Roberts	11.0	Trinity	27.4
Robertson	27.4	Tyler	22.6
Rockwall	18.2	Upshur	22.5
Runnels	20.0	Upton	18.9
Rusk	22.5	Uvalde	49.4
Sabine	22.6	Val Verde	49.4
San Augustine	22.5	Van Zandt	17.2
San Jacinto	27.4	Victoria	27.4
San Patricio	41.7	Walker	27.4
San Saba	20.0	Waller	27.3
Schleicher	20.0	Ward	18.9
Scurry	10.9	Washington	27.4
Shackelford	10.9	Webb	87.3
Shelby	22.5	Wharton	27.4
Sherman	11.0	Wheeler	11.0
Smith	23.5	Wichita	12.4
Somervell	17.2	Wilbarger	11.0
Starr	72.9	Willacy	72.9
Stephens	10.9	Williamson	24.1
Sterling	20.0	Wilson	49.4
Stonewall	10.9	Winkler	18.9
Sutton	20.0	Wise	18.2
Swisher	11.0	Wood	22.5
Tarrant	18.2	Yoakum	19.5
Taylor	11.6	Young	11.0
Terrell	20.0	Zapata	49.4
Terry	19.5	Zavala	49.4

Special Provision to Item 000

Standard Federal Equal Employment Opportunity Construction Contract Specifications (Executive Order 11246)

1. GENERAL

1.1. As used in these specifications:

- "Covered area" means the geographical area described in the solicitation from which this Contract resulted;
- "Director" means Director, Office of Federal Contract Compliance Programs, United States Department of Labor, or any person to whom the Director delegates authority;
- "Employer identification number" means the Federal Social Security number used on the Employer's Quarterly Federal Tax Return, U.S. Treasury Department Form 941.
- "Minority" includes:
  - Black (all persons having origins in any of the Black African racial groups not of Hispanic origin);
  - Hispanic (all persons of Mexican, Puerto Rican, Cuban, Central or South American or other Spanish Culture or origin, regardless of race);
  - Asian and Pacific Islander (all persons having origins in any of the original peoples of the Far East, Southeast Asia, the Indian Subcontinent, or the Pacific Islands); and
  - American Indian or Alaskan Native (all persons having origins in any of the original peoples of North American and maintaining identifiable tribal affiliations through membership and participation or community identification).

1.2. Whenever the Contractor, or any Subcontractor at any tier, subcontracts a portion of the work involving any construction trade, it will physically include in each subcontract in excess of $10,000 the provisions of these specifications and the Notice which contains the applicable goals for minority and female participation and which is set forth in the solicitations from which this Contract resulted.

1.3. If the Contractor is participating (pursuant to 41 CFR 60-4.5) in a Hometown Plan approved by the U. S. Department of Labor in the covered area either individually or through an association, its affirmative action obligations on all work in the Plan area (including goals and timetables) will be in accordance with that plan for those trades which have unions participating in the Plan. Contractors must be able to demonstrate their participation in and compliance with the provisions of any such Hometown Plan. Each Contractor or Subcontractor participating in an approved Plan is individually required to comply with its obligations under the equal employment opportunity (EEO) clause, and to make a good faith effort to achieve each goal under the Plan in each trade in which it has employees. The overall good faith performance by other Contractors or Subcontractors toward a goal in an approved Plan does not excuse any covered Contractor's or Subcontractor's failure to take good faith efforts to achieve the Plan goals and timetables.

1.4. The Contractor will implement the specific affirmative action standards provided in Section 1.7.1. through Section 1.7.16. of these specifications. The goals set forth in the solicitation from which this Contract resulted are expressed as percentages of the total hours of employment and training of minority and female utilization the Contractor should reasonably be able to achieve in each construction trade in which it has employees in the covered area. Covered construction Contractors performing Contracts in geographical areas where they do not have a Federal or federally assisted construction Contract will apply the minority and female goals established for the geographical area where the Contract is being performed. Goals are published periodically in the Federal Register in notice form and such notices may be obtained from any Office of Federal Contract Compliance Programs office or any Federal procurement contracting officer. The

Contractor is expected to make substantially uniform progress toward its goals in each craft during the period specified.

1.5. Neither the provisions of any collective bargaining agreement, nor the failure by a union with whom the Contractor has a collective bargaining agreement, to refer either minorities or women will excuse the Contractor's obligations under these specifications, Executive Order 11246, or the regulations promulgated pursuant thereto.

1.6. In order for the nonworking training hours of apprentices and trainees to be counted in meeting the goals, such apprentices and trainees must be employed by the Contractor during the training period, and the Contractor must have made a commitment to employ the apprentices and trainees at the completion of their training, subject to the availability of employment opportunities. Trainees must be trained pursuant to training programs approved by the U. S. Department of Labor.

1.7. The Contractor will take specific affirmative actions to ensure equal employment opportunity. The evaluation of the Contractor's compliance with these specifications will be based upon its effort to achieve maximum results from its actions. The Contractor will document these efforts fully, and will implement affirmative action steps at least as extensive as the following:

1.7.1. Ensure and maintain a working environment free of harassment, intimidation, and coercion at all sites, and in all facilities at which the Contractor's employees are assigned to work. The Contractor, where possible, will assign two or more women to each construction project. The Contractor will specifically ensure that all foremen, superintendents, and other on-site supervisory personnel are aware of and carry out the Contractor's obligation to maintain such a working environment, with specific attention to minority or female individuals working at such sites or in such facilities.

1.7.2. Establish and maintain a current list of minority and female recruitment sources, provide written notification to minority and female recruitment sources and to community organizations when the Contractor or its unions have employment opportunities available, and maintain a record of the organizations' responses.

1.7.3. Maintain a current file of the names, addresses and telephone numbers of each minority and female off-the-street applicant and minority or female referral from a union, a recruitment source or community organization and of what action was taken with respect to each such individual. If such individual was sent to the union hiring hall for referral and was not referred back to the Contractor by the union or, if referred, not employed by the Contractor, this will be documented in the file with the reason therefor, along with whatever additional actions the Contractor may have taken.

1.7.4. Provide immediate written notification to the Director when the union or unions with which the Contractor has a collective bargaining agreement has not referred to the Contractor a minority person or woman sent by the Contractor, or when the Contractor has other information that the union referral Process has impeded the Contractor's efforts to meet its obligations.

1.7.5. Develop on-the-job training opportunities and/or participate in training programs for the area which expressly include minorities and women, including upgrading programs and apprenticeship and trainee programs relevant to the Contractor's employment needs, especially those programs funded or approved by the Department of Labor. The Contractor will provide notice of these programs to the sources compiled under 7b above.

1.7.6. Disseminate the Contractor's EEO policy by providing notice of the policy to unions and training programs and requesting their cooperation in assisting the Contractor in meeting its EEO obligations; by including it in any policy manual and Collective bargaining agreement; by publicizing it in the company newspaper, annual report, etc.; by specific review of the policy with all management personnel and with all minority and female employees at least once a year; and by posting the company EEO policy on bulletin boards accessible to all employees at each location where construction work is performed.

1.7.7. Review, at least annually, the company's EEO policy and affirmative action obligations under these specifications with all employees having any responsibility for hiring, assignment, layoff, termination or other

employment decisions including specific review of these items with on-site supervisory personnel such as Superintendents, General Foremen, etc., before the initiation of construction work at any job site. A written record must be made and maintained identifying the time and place of these meetings, persons attending, subject matter discussed, and disposition of the subject matter.

1.7.8. Disseminate the Contractor's EEO policy externally by including it in any advertising in the news media, specifically including minority and female news media, and providing written notification to and discussing the Contractor's EEO policy with other Contractors and Subcontractors with whom the Contractor does or anticipates doing business.

1.7.9. Direct its recruitment efforts, both oral and written, to minority, female and community organizations, to schools with minority and female students and to minority and female recruitment and training organizations serving the Contractor's recruitment area and employment needs. Not later than one month before the date for the acceptance of applications for apprenticeship or other training by any recruitment source, the Contractor will send written notification to organizations such as the above, describing the openings, screening procedures, and tests to be used in the selection process.

1.7.10. Encourage present minority and female employees to recruit other minority persons and women and, where reasonable, provide after school, summer and vacation employment to minority and female youth both on the site and in other areas of a Contractor's workforce.

1.7.11. Validate all tests and other selection requirements where there is an obligation to do so under 41 CFR Part 60-3.

1.7.12. Conduct, at least annually, an inventory and evaluation at least of all minority and female personnel for promotional opportunities and encourage these employees to seek or to prepare for, through appropriate training, etc., such opportunities.

1.7.13. Ensure that seniority practices, job classifications, work assignments and other personnel practices, do not have a discriminatory effect by continually monitoring all personnel and employment-related activities to ensure that the EEO policy and the Contractor's obligations under these specifications are being carried out.

1.7.14. Ensure that all facilities and company activities are non-segregated except that separate or single-user toilet and necessary changing facilities will be provided to assure privacy between the sexes.

1.7.15. Document and maintain a record of all solicitations of offers for subcontracts from minority and female construction contractors and suppliers, including circulation of solicitations to minority and female contractor associations and other business associations.

1.7.16. Conduct a review, at least annually, of all supervisors' adherence to and performance under the Contractor's EEO policies and affirmative action obligations.

1.8. Contractors are encouraged to participate in voluntary associations which assist in fulfilling one or more of their affirmative action obligations (Section 7.1. through Section 7.16.). The efforts of a contractor association, joint contractor-union, contractor-community, or other similar group of which the Contractor is a member and participant, may be asserted as fulfilling any one or more of its obligations under Section 7.1. through Section 7.16. of these Specifications provided that the Contractor actively participates in the group, makes every effort to assure that the group has a positive impact on the employment of minorities and women in the industry, ensures that the concrete benefits of the program are reflected in the Contractor's minority and female workforce participation, makes a good faith effort to meet its individual goals and timetables, and can provide access to documentation which demonstrates the effectiveness of actions taken on behalf of the Contractor. The obligation to comply, however, is the Contractor's and failure of such a group to fulfill an obligation will not be a defense for the Contractor's noncompliance.

1.9. A single goal for minorities and a separate single goal for women have been established. The Contractor, however, is required to provide equal employment opportunity and to take affirmative action for all minority groups, both male and female, and all women, both minority and non-minority. Consequently, the Contractor

may be in violation of the Executive Order if a particular group is employed in a substantially disparate manner (for example, even though the Contractor has achieved its goals for women generally, the Contractor may be in violation of the Executive Order if a specific minority group of women is underutilized).

1.10. The Contractor shall not use the goals and timetables or affirmative action standards to discriminate against any person because of race, color, religion, sex, or national origin.

1.11. The Contractor will not enter into any Subcontract with any person or firm debarred from Government Contracts pursuant to Executive Order 11246.

1.12. The Contractor will carry out such sanctions and penalties for violation of these specifications and of the Equal Opportunity Clause, including suspension, termination and cancellation of existing subcontracts as may be imposed or ordered pursuant to Executive Order 11246, as amended, and its implementing regulations, by the Office of Federal Contract Compliance Programs. Any Contractor who fails to carry out such sanctions and penalties will be in violation of these specifications and Executive Order 11246, as amended.

1.13. The Contractor, in fulfilling its obligations under these specifications, will implement specific affirmative action steps, at least as extensive as those standards prescribed in paragraph 7 of these specifications, so as to achieve maximum results from its efforts to ensure equal employment opportunity. If the Contractor fails to comply with the requirements of the Executive Order, the implementing regulations, or these specifications, the Director will proceed in accordance with 41 CFR 60-4.8.

1.14. The Contractor will designate a responsible official to monitor all employment-related activity to ensure that the company EEO policy is being carried out, to submit reports relating to the provisions hereof as may be required by the Government and to keep records. Records must at least include for each employee the name, address, telephone numbers, construction trade, union affiliation if any, employee identification number when assigned, social security number, race, sex, status (e.g., mechanic, apprentice, trainee, helper, or laborer), dates of changes in status, hours worked per week in the indicated trade, rate of pay, and locations at which the work was performed. Records must be maintained in an easily understandable and retrievable form; however, to the degree that existing records satisfy this requirement, Contractors shall not be required to maintain separate records.

1.15. Nothing herein provided will be construed as a limitation upon the application of other laws which establish different standards of compliance or upon the application of requirements for the hiring of local or other area residents (e.g., those under the Public Works Employment Act of 1977 and the Community Development Block Grant Program).

1.16. In addition to the reporting requirements set forth elsewhere in this Contract, the Contractor and the subcontractors holding subcontracts, not including material suppliers, of $10,000 or more, will submit for every month of July during which work is performed, employment data as contained under Form PR 1391 (Appendix C to 23 CFR, Part 230), and in accordance with the included instructions.

Special Provision to Item 000
On-the-Job Training Program

1. DESCRIPTION

The primary objective of this Special Provision is the training and advancement of minorities, women and economically disadvantaged persons toward journeyworker status. Accordingly, make every effort to enroll minority, women and economically disadvantaged persons to the extent that such persons are available within a reasonable area of recruitment. This training commitment is not intended, and will not be used to discriminate against any applicant for training, whether or not he/she is a member of a minority group.

2. TRAINEE ASSIGNMENT

Training assignments are based on the past volume of state-let highway construction contracts awarded with the Department. Contractors meeting the selection criteria will be notified of their training assignment at the beginning of the reporting year by the Department's Office of Civil Rights.

3. PROGRAM REQUIREMENTS

Fulfill all of the requirements of the On-the-Job Training Program including the maintenance of records and submittal of periodic reports documenting program performance. Trainees will be paid at least 60% of the appropriate minimum journeyworker's rate specified in the Contract for the first half of the training period, 75% for the third quarter, and 90% for the last quarter, respectively.

4. REIMBURSEMENT

If requested, Contractors may be reimbursed $0.80 per training hour at no additional cost to the Department. Training may occur on this project, all other Department contracts, or local-administered federal-aid projects with concurrence of the local government entity. However, reimbursement for training is not available on projects to the extent that such projects that do not contain federal funds.

5. COMPLIANCE

The Contractor will have fulfilled the contractual responsibilities by having provided acceptable training to the number of trainees specified in their goal assignment. Noncompliance may be cause for corrective and appropriate measures pursuant to Article 8.7., "Abandonment of Work or Default of Contract," which may be used to comply with the sanctions for noncompliance pursuant to 23 CFR Part 230.

Special Provision to Item 000

Disadvantaged Business Enterprise in Federal Aid Contracts

1. DESCRIPTION

The purpose of this Special Provision is to carry out the U.S. Department of Transportation's (DOT) policy of ensuring nondiscrimination in the award and administration of DOT assisted Contracts and creating a level playing field on which firms owned and controlled by individuals who are determined to be socially and economically disadvantaged can compete fairly for DOT assisted Contracts. If the Disadvantaged Business Enterprise (DBE) goal is greater than zero, Article A, "Disadvantaged Business Enterprise in Federal Aid Contracts", of this Special Provision shall apply to this Contract. If there is no DBE goal, Article B, "Race-Neutral DBE Participation," of this Special Provision will apply to this Contract. The percentage goal for DBE participation in the work to be performed under this Contract will be shown on the proposal.

1.1. **Article A. Disadvantaged Business Enterprise in Federal Aid Contracts.**

1.1.1. **Policy**. It is the policy of the DOT and the Texas Department of Transportation (Department) that DBEs, as defined in 49 CFR Part 26, Subpart A and the Department's DBE Program, shall have the opportunity to participate in the performance of Contracts financed in whole or in part with Federal funds. The DBE requirements of 49 CFR Part 26, and the Department's DBE Program, apply to this Contract as follows:

1.1.1.1. The Contractor will solicit DBEs through reasonable and available means, as defined in 49 CFR Part 26, Appendix A and the Department's DBE Program, or show a good faith effort to meet the DBE goal for this Contract.

1.1.1.2. The Contractor, subrecipient or subcontractor shall not discriminate on the basis of race, color, national origin, or sex in the performance of this Contract. The Contractor shall carry out applicable requirements of 49 CFR Part 26 in the award and administration of DOT-assisted Contracts. Failure by the Contractor to carry out these requirements is a material breach of this Contract, which may result in the termination of this Contract or such other remedy as the recipient deems appropriate.

1.1.1.3. The requirements of this Special Provision shall be physically included in any subcontract.

1.1.1.4. By signing the Contract proposal, the Bidder is certifying that the DBE goal as stated in the proposal will be met by obtaining commitments from eligible DBEs or that the Bidder will provide acceptable evidence of good faith effort to meet the commitment. The Department will determine the adequacy of a Contractor's efforts to meet the Contract goal, within 10 business days, excluding national holidays, from receipt of the information outlined in this Special Provision under Section 1.1.3., "Contractor's Responsibilities." If the requirements of Section 1.A.3 are met, the conditional situation will be removed and the Contract will be forwarded to the Contractor for execution.

1.1.2. **Definitions.**

1.1.2.1. "Broker" is an intermediary or middleman that does not take possession of a commodity or act as a regular dealer selling to the public.

1.1.2.2. "Disadvantaged Business Enterprise" or "DBE" is defined in the standard specifications, Article 1, Definition of Terms.

1.1.2.3. "DBE Joint Venture" means an association of a DBE firm and 1 or more other firm(s) to carry out a single business enterprise for profit for which purpose they combine their property, capital, efforts, skills and knowledge, and in which the DBE is responsible for a distinct, clearly defined portion of the work of the Contract and whose share in the capital contribution, control, management, risks, and profits of the joint venture are commensurate with its ownership interest.

1.1.2.4. "DOT" means the U.S. Department of Transportation, including the Office of the Secretary, the Federal Highway Administration (FHWA), the Federal Transit Administration (FTA), and the Federal Aviation Administration (FAA).

1.1.2.5. "Federal Aid Contract" is any Contract between the Department and a Contractor which is paid for in whole or in part with DOT financial assistance.

1.1.2.6. "Good Faith Effort" means efforts to achieve a DBE goal or other requirement of this Special Provision which, by their scope, intensity, and appropriateness to the objective, can reasonably be expected to fulfill the program requirement.

1.1.2.7. "Manufacturer" is a firm that operates or maintains a factory or establishment that produces, on the premises, the materials, supplies, articles, or equipment required under the Contract and of the general character described by the specifications."

1.1.2.8. "Race-conscious" means a measure or program that is focused specifically on assisting only DBEs, including women-owned businesses.

1.1.2.9. "Race-neutral DBE Participation" means any participation by a DBE through customary competitive procurement procedures.

1.1.2.10. "Regular Dealer" is a firm that owns, operates, or maintains a store, warehouse, or other establishment in which the materials, supplies, articles or equipment of the general character described by the specifications and required under the Contract are bought, kept in stock, and regularly sold or leased to the public in the usual course of business. To be a regular dealer, the firm must be an established, regular business that engages in, as its principal business and under its own name, the purchase and sale or lease of the products in question.

A regular dealer in such bulk items as steel, cement, gravel, stone, and petroleum products need not keep such products in stock if it owns and operates distribution equipment for the products. Any supplementing of regular dealers own distribution equipment shall be by a long-term lease agreement and not on an ad hoc or contract-by-contract basis. Brokers, packagers, manufacturers' representatives, or other persons who arrange or expedite transactions shall not be regarded as a regular dealer.

1.1.2.11. "Texas Unified Certification Program" or "TUCP" provides one-stop shopping to applicants for certification, such that applicants are required to apply only once for a DBE certification that will be honored by all recipients of federal funds in the state. The TUCP by Memorandum of Agreement established six member entities to serve as certifying agents for Texas in specified regions.

1.1.3. **Contractor's Responsibilities**. These requirements must be satisfied by the Contractor.

1.1.3.1. After conditional award of the Contract, the Contractor shall submit a completed Form SMS.4901 "DBE Commitment Agreement", From SMS 4901-T "DBE Trucking Commitment Agreement", or Form SMS.4901-MS "DBE Material & Supplier Commitment Agreement" for each DBE he/she intends to use to satisfy the DBE goal or a good faith effort to explain why the goal could not be reached, so as to arrive in the Department's Office of Civil Rights (OCR) in Austin, Texas not later than 5:00 p.m. on the 10th business day, excluding national holidays, after the conditional award of the Contract. When requested, additional time, not to exceed 7 business days, excluding national holidays, may be granted based on documentation submitted by the Contractor.

1.1.3.2. DBE prime Contractors may receive credit toward the DBE goal for work performed by his/her own forces and work subcontracted to DBEs. A DBE prime must make a good faith effort to meet the goals. In the event a DBE prime subcontracts to a non-DBE, that information must be reported on Form SMS.4902.

1.1.3.3. A Contractor who cannot meet the Contract goal, in whole or in part, shall make adequate good faith efforts to obtain DBE participation as so stated and defined in 49 CFR Part 26, Appendix A. The following is a list of the types of action that may be considered as good faith efforts. It is not intended to be a mandatory checklist, nor is it intended to be exclusive or exhaustive. Other factors or types of efforts may be relevant in appropriate cases.

- Soliciting through all reasonable and available means (e.g. attendance at prebid meetings, advertising, and/or written notices) the interest of all certified DBEs who have the capability to perform the work of the Contract. The solicitation must be done within sufficient time to allow the DBEs to respond to it. Appropriate steps must be taken to follow up initial solicitations to determine, with certainty, if the DBEs are interested.
- Selecting portions of the work to be performed by DBEs in order to increase the likelihood that the DBE goals will be achieved. This includes, where appropriate, breaking out Contract work items into economically feasible units to facilitate DBE participation, even when the Contractor might otherwise prefer to perform the work items with its own forces.
- Providing interested DBEs with adequate information about the plans, specifications, and requirements of the Contract in a timely manner to assist them in responding to a solicitation.
- Negotiating in good faith with interested DBEs to make a portion of the work available to DBE subcontractors and suppliers and select those portions of the work or material needs consistent with the available DBE subcontractors and suppliers, so as to facilitate DBE participation. Evidence of such negotiations includes the names, addresses, and telephone numbers of DBEs that were considered; a description of the information provided regarding the plans and specifications for the work selected for subcontracting; and evidence as to why additional agreements could not be reached for DBEs to perform the work.
- A Bidder using good business judgment would consider a number of factors in negotiating with subcontractors, including DBE subcontractors, and would take a firm price and capabilities as well as Contract goals into consideration. However, the fact that there may be some additional cost involved in finding and using DBEs is not in itself sufficient reason for a bidders failure to meet the Contract DBE goal as long as such cost are reasonable. Also, the ability or desire of the Contractor to perform the work of the Contract with its own organization does not relieve the Bidder of the responsibility to make good faith effort. Contractors are not, however, required to accept higher quotes from DBEs if the price difference is excessive or unreasonable.
- Not rejecting DBEs as being unqualified without sound reasons based on a thorough investigation of their capabilities. The Contractor's standing within its industry, membership in specific groups, organizations, or associations and political or social affiliations (for example union vs. non-union employee status) are not legitimate cause for the rejection or non-solicitation of bids and the Contractors efforts to meet the project goal.
- Making efforts to assist interested DBEs in obtaining bonding, lines of credit, or insurance as required by the recipient or Contractor.
- Making efforts to assist interested DBEs in obtaining necessary equipment, supplies, materials, or related assistance or services.
- Effectively using the services of available minority/women community organizations; minority/women Contractors' groups; local, state, and Federal minority/women business assistance offices; and other organizations as allowed on a case-by-case basis to provide assistance in the recruitment and placement of DBEs.
- If the Program Manager of the OCR determines that the Contractor has failed to meet the good faith effort requirements, the Contractor will be given an opportunity for reconsideration by the Director of the OCR.

1.1.3.4. Should the bidder to whom the Contract is conditionally awarded refuse, neglect or fail to meet the DBE goal or comply with good faith effort requirements, the proposal guaranty filed with the bid shall become the property of the state, not as a penalty, but as liquidated damages to the Department.

1.1.3.5. The preceding information shall be submitted directly to the Office of Civil Rights, Texas Department of Transportation, 125 E. 11th Street, Austin, Texas 78701-2483.

1.1.3.6. The Contractor shall not terminate for convenience a DBE subcontractor named in the commitment submitted under Section 1.A.3.a, of this Special Provision. Before terminating or removing a DBE subcontractor named in the commitment, the Contractor must have a written consent of the Department.

1.1.3.7. The Contractor shall also make a good faith effort to replace a DBE subcontractor that is unable to perform successfully with another DBE, to the extent needed to meet the Contract goal. The Contractor shall submit a completed Form 4901 "DBE Commitment Agreement", From SMS 4901-T "DBE Trucking Commitment Agreement", or Form SMS.4901-MS "DBE Material & Supplier Commitment Agreement" for the substitute DBE firm(s). Any substitution of DBEs shall be subject to approval by the Department. Before approving the substitution, the Department will request a statement from the DBE concerning it being replaced.

1.1.3.8. The Contractor shall designate a DBE liaison officer who will administer the Contractor's DBE program and who will be responsible for maintenance of records of efforts and contacts made to subcontract with DBEs.

1.1.3.9. Contractors are encouraged to investigate the services offered by banks owned and controlled by disadvantaged individuals and to make use of these banks where feasible.

1.1.4. **Eligibility of DBEs.**

1.1.4.1. The member entities of the TUCP certify the eligibility of DBEs and DBE joint ventures to perform DBE subcontract work on DOT financially assisted Contracts.

1.1.4.2. The Department maintains the Texas Unified Certification Program DBE Directory containing the names of firms that have been certified to be eligible to participate as DBE's on DOT financially assisted Contracts. This Directory is available from the Department's OCR. An update of the Directory can be found on the Internet at http://www.txdot.gov/apps-cq/tucp/default.htm.

1.1.4.3. Only DBE firms certified at the time commitments are submitted are eligible to be used in the information furnished by the Contractor as required under Section 1.A.3.a. and 3.g. above. For purposes of the DBE goal on this project, DBEs will only be allowed to perform work in the categories of work for which they are certified.

1.1.4.4. Only DBE firms certified at the time of execution of a Contract/subcontract/purchase order, are eligible for DBE goal participation.

1.1.5. **Determination of DBE Participation**. When a DBE participates in a Contract, only the values of the work actually performed by the DBE, as referenced below, shall be counted by the prime Contractor toward DBE goals:

1.1.5.1. The total amount paid to the DBE for work performed with his/her own forces is counted toward the DBE goal. When a DBE subcontracts part of the work of its Contract to another firm, the value of the subcontracted work may be counted toward DBE goals only if the subcontractor is itself a DBE. Work that a DBE subcontracts to a non-DBE firm does not count toward DBE goals.

1.1.5.2. A Contractor may count toward its DBE goal a portion of the total value of the Contract amount paid to a DBE joint venture equal to the distinct, clearly defined portion of the work of the Contract performed by the DBE.

1.1.5.2.1. A Contractor may count toward its DBE goal only expenditures to DBEs that perform a commercially useful function (CUF) in the work of a Contract or purchase order. A DBE is considered to perform a CUF when it is

responsible for execution of the work of the Contract and is carrying out its responsibilities by actually performing, managing, and supervising the work involved. To perform a CUF, the DBE must also be responsible, with respect to materials and supplies used on the Contract, for negotiating price, determining quality and quantity, ordering the material, and installing (where applicable) and paying for the material itself.

In accordance with 49 CFR Part 26, Appendix A, guidance concerning Good Faith Efforts, Contractors may make efforts to assist interested DBEs in obtaining necessary equipment, supplies, materials, or related assistance or services. Contractors may not however, negotiate the price of materials or supplies used on the Contract by the DBE, nor may they determine quality and quantity, order the materials themselves, nor install the materials (where applicable), or pay for the material themselves. Contractors however, may share the quotations they receive from the material supplier with the DBE firm, so that the DBE firm may negotiate a reasonable price with the material supplier.

In all cases, prime or other non-DBE subcontractor assistance will not be credited toward the DBE goal.

1.1.5.2.2. A DBE does not perform a CUF if its role is limited to that of an extra participant in a transaction, Contract, or project through which funds are passed in order to obtain the appearance of DBE participation.

Consistent with industry practices and the DOT/Department's DBE program, a DBE subcontractor may enter into second-tier subcontracts, amounting up to 70% of their Contract. Work subcontracted to a non-DBE does not count towards DBE goals. If a DBE does not perform or exercise responsibility for at least 30% of the total cost of its Contract with its own work force, or the DBE subcontracts a greater portion of the work of a Contract than would be expected on the basis of normal industry practice for the type of work involved, it will be presumed that the DBE is not performing a CUF

1.1.5.2.3. A DBE trucking firm (including an owner operator who is certified as a DBE is considered to be performing a CUF when the DBE is responsible for the management and supervision of the entire trucking operation on a particular Contract and the DBE itself owns and operates at least 1 fully licensed, insured, and operational truck used on the Contract.

1.1.5.2.3.1. The Contractor receives credit for the total value of the transportation services the DBE provides on a Contract using trucks it owns, insures, and operates using drivers it employs.

1.1.5.2.3.2. The DBE may lease trucks from another DBE firm, including an owner operator who is certified as a DBE. The DBE who leases trucks from another DBE receives credit for the total value of the transportation services the lessee DBE provides on the Contract.

1.1.5.2.3.3. The DBE may also lease trucks from a non-DBE firm, including from an owner-operator. The DBE who leases trucks from a non-DBE is entitled to credit for the total value of transportation services provided by non-DBE lessees not to exceed the value of transportation services provided by the DBE-owned trucks on the Contract. Additional participation by non-DBE lessees receive credit only for the fee or commission it receives as result of the lease arrangement

1.1.5.2.3.4. A lease must indicate that the DBE has exclusive use of and control over the trucks giving the DBE absolute priority for use of the leased trucks. Leased trucks must display the name and identification number of the DBE.

1.1.5.2.4. When a DBE is presumed not to be performing a CUF the DBE may present evidence to rebut this presumption.

1.1.5.2.5. Project materials or supplies acquired from an affiliate of the prime Contractor can not directly or indirectly (2nd or lower tier subcontractor) be used for DBE goal credit.

1.1.5.3. A Contractor may count toward its DBE goals expenditures for materials and supplies obtained from a DBE manufacturer, provided that the DBE assumes the actual and contractual responsibility for the materials and

supplies. Count expenditures with DBEs for materials or supplies toward DBE goals as provided in the following:

1.1.5.3.1. If the materials or supplies are obtained from a DBE manufacturer, count 100% of the cost of the materials or supplies toward DBE goals. (Definition of a DBE manufacturer found at 1A.c.(1) of this provision.)

For purposes of this Section (1.A.c.(1)), a manufacturer is a firm that operates or maintains a factory or establishment that produces, on the premises, the materials, supplies, articles, or equipment required under the Contract and of the general character described by the specifications.

1.1.5.3.2. If the materials or supplies are purchased from a DBE regular dealer, count 60% of the cost of the materials or supplies toward DBE goals.

For purposes of this Section (1.A.5.c.(2)), a regular dealer is a firm that owns, operates, or maintains a store, warehouse, or other establishment in which the materials, supplies, articles or equipment of the general character described by the specifications and required under the Contract are bought, kept in stock, and regularly sold or leased to the public in the usual course of business:

1.1.5.3.2.1. To be a regular dealer, the firm must be an established, regular business that engages, as its principal business and under its own name, in the purchase and sale or lease of the products in question.

1.1.5.3.2.2. A person may be a regular dealer in such bulk items as petroleum products, steel, cement, gravel, stone or asphalt without owning, operating, or maintaining a place of business as provided in the first paragraph under Section 1.A.5.c.(2), if the person both owns and operates distribution equipment for the products. Any supplementing of regular dealers' own distribution equipment shall be by a long-term lease agreement and not on an ad hoc or contract-by-contract basis.

1.1.5.3.2.3. Packagers, brokers, manufacturers' representatives, or other persons who arrange or expedite transactions are not regular dealers within the meaning of Section 1.A.5.c.(2).

1.1.5.3.3. With respect to materials or supplies purchased from DBE which is neither a manufacturer nor a regular dealer, count the entire amount of fees or commissions charged for assistance in the procurement of the materials and supplies, or fees or transportation charges for the delivery of materials or supplies required on a job site, toward DBE goals, provided you determine the fees to be reasonable and not excessive as compared with fees customarily allowed for similar services.

Do not count any portion of the cost of the materials and supplies themselves toward DBE goals.

1.1.5.3.4. Count the entire amount of fees or commissions charged by a DBE firm for providing a bona fide service, such as professional, technical, consultant or managerial services, or for providing bonds or insurance specifically required for the performance of a DOT-assisted Contract, toward DBE goals, provided you determine the fee to be reasonable and not excessive as compared with fees customarily allowed for similar services.

1.1.5.4. If the Contractor chooses to assist a DBE firm, other than a manufacturing material supplier or regular dealer, and the DBE firm accepts the assistance, the Contractor may act solely as a guarantor by use of a two-party check for payment of materials to be used on the project by the DBE. The material supplier must invoice the DBE who will present the invoice to the Contractor. The Contractor may issue a joint check to the DBE and the material supplier and the DBE firm must issue the remittance to the material supplier. No funds shall go directly from the Contractor to the material supplier. The DBE firm may accept or reject this joint checking arrangement.

The Contractor must obtain approval from the Department before implementing the use of joint check arrangements with the DBE. Submit to the Department, Joint Check Approval Form 2178 for requesting approval. Provide copies of cancelled joint checks upon request. No DBE goal credit will be allowed for the cost of DBE materials that are paid by the Contractor directly to the material supplier.

1.1.5.5. No DBE goal credit will be allowed for supplies and equipment the DBE subcontractor leases from the Contractor or its affiliates.

1.1.5.6. No DBE goal credit will be allowed for the period of time determined by the Department that the DBE was not performing a CUF. The denial period of time may occur before or after a determination has been made by the department. In case of the denial of credit for non-performance of a CUF of a DBE, the Contractor will be required to provide a substitute DBE to meet the Contract goal or provide an adequate good faith effort when applicable.

1.1.6. **Records and Reports.**

1.1.6.1. The Contractor shall submit monthly reports, after work begins, on DBE payments to meet the DBE goal and for DBE or HUB race-neutral participation. Report payments made to non-DBE HUBs. The monthly report is to be sent to the Area Engineer. These reports will be due within 15 days after the end of a calendar month. These reports will be required until all DBE subcontracting or material supply activity is completed. Form SMS.4903, "DBE Progress Report," is to be used for monthly reporting. Form. SMS.4904, "DBE Final Report," is to be used as a final summary of DBE payments submitted upon completion of the project.

The original final report must be submitted to the OCR and a copy must be submitted to the Area Engineer. These forms may be obtained from the Department or may be reproduced by the Contractor. The Department may verify the amounts being reported as paid to DBEs by requesting copies of cancelled checks paid to DBEs on a random basis. Cancelled checks and invoices should reference the Department's project number.

1.1.6.2. DBE subcontractors and/or material suppliers should be identified on the monthly report by Vendor Number, name, and the amount of actual payment made to each during the monthly period. Negative reports are required when no activity has occurred in a monthly period.

1.1.6.3. All such records must be retained for a period of 3 years following completion of the Contract work, and shall be available at reasonable times and places for inspection by authorized representatives of the Department or the DOT. Provide copies of subcontracts or agreements and other documentation upon request.

1.1.6.4. Before receiving final payment, the Contractor shall submit Form SMS.4904, "DBE Final Report". If the DBE goal requirement is not met, documentation supporting Good Faith Efforts, as outlined in Section 1.A.3.c of this Special Provision, must be submitted with the "DBE Final Report."

1.1.6.5. Provide a certification of prompt payment in accordance with the Department's prompt payment procedure to certify that all subcontractors and suppliers were paid from the previous months payments and retainage was released for those whose work is complete. Submit the completed form each month and the month following the month when final acceptance occurred at the end of the project.

1.1.7. **Compliance of Contractor**. To ensure that DBE requirements of this DOT assisted Contract are complied with, the Department will monitor the Contractor's efforts to involve DBEs during the performance of this Contract. This will be accomplished by a review of monthly reports submitted to the Area Engineer by the Contractor indicating his progress in achieving the DBE Contract goal, and by compliance reviews conducted on the project site by the Department.

The Contractor shall receive credit toward the DBE goal based on actual payments to the DBE subcontractor. The Contractor shall notify the Area Engineer if he/she withholds or reduces payment to any DBE subcontractor. The Contractor shall submit an affidavit detailing the DBE subcontract payments before receiving final payment for the Contract.

Contractors' requests for substitutions of DBE subcontractors shall be accompanied by a detailed explanation which should substantiate the need for a substitution. The Contractor may not be allowed to count work on those items being substituted toward the DBE goal before approval of the substitution from the Department.

The prime Contractor is prohibited from providing work crews and equipment to DBEs. DBE Goal credit for the DBE subcontractors leasing of equipment or purchasing of supplies from the prime Contractor or its affiliates is not allowed.

When a DBE subcontractor named in the commitment under Section 1.A.3.a. of this Special Provision, is terminated or fails to complete its work on the Contract for any reason, the prime Contractor is required to make good faith efforts to find another DBE subcontractor to substitute for the original DBE. These good faith efforts shall be directed at finding another DBE to perform at least the same amount of work under the Contract as the DBE that was terminated, to the extent needed to meet the Contract goal.

A Contractor's failure to comply with the requirements of this Special Provision shall constitute a material breach of this Contract. In such a case, the Department reserves the right to terminate the Contract; to deduct the amount of DBE goal not accomplished by DBEs from the money due or to become due the Contractor, or to secure a refund, not as a penalty but as liquidated damages to the Department or such other remedy or remedies as the Department deems appropriate.

Forward Form 2371, "DBE Trucking Credit Worksheet," completed by the DBE trucker every month DBE credit is used.

1.2. **Article B. Race-Neutral Disadvantaged Business Enterprise Participation.** It is the policy of the DOT that Disadvantaged Business Enterprises (DBE) as defined in 49 CFR Part 26 Subpart A, be given the opportunity to compete fairly for Contracts and subcontracts financed in whole or in part with Federal funds and that a maximum feasible portion of the Department's overall DBE goal be met using race-neutral means. Consequently, if there is no DBE goal, the DBE requirements of 49 CFR Part 26, apply to this Contract as follows:

The Contractor will offer DBEs as defined in 49 CFR Part 26, Subpart A, the opportunity to compete fairly for Contracts and subcontractors financed in whole or in part with Federal funds. Race-Neutral DBE and non-DBE HUB participation on projects with no DBE goal shall be reported on Form SMS.4903, "DBE or HUB Progress Report" and submitted to the Area Engineer each month and at project completion. Payments to DBEs reported on Form SMS.4903 are subject to the requirements of Section 1.1.5., "Determination of DBE Participation."

The Contractor, subrecipient or subcontractor shall not discriminate on the basis of race, color, national origin, or sex in the performance of this Contract. The Contractor shall carry out applicable requirements of 49 CFR Part 26 in the award and administration of DOT-assisted Contracts. Failure by the Contractor to carry out these requirements is a material breach of this Contract, which may result in the termination of this Contract or such other remedy as the recipient deems appropriate.

Special Provision to Item 000
Important Notice to Contractors

By the 20th day of each month, report to the Engineer the number of incidents and injuries that occurred on the project the previous month. Report:

- the total number of incidents and injuries for the Contractor and all subcontractors, and
- the number of Contractor and subcontractor-related incidents and injuries that involved a third party.

An "incident" is defined as any work-related occurrence that caused damage only to vehicles, equipment, materials, etc.

An "injury" is defined as an OSHA recordable injury.

Acquire an Electronic Project Records System (EPRS) account to report incidents and injuries. Submit an EPRS User Access Request Form (Form 2451) to request an account. This form can be found at http://www.txdot.gov/business/resources/doing-business/prequalification.html.

Report injuries and incidents using the EPRS website located at https://apps.dot.state.tx.us/apps/eprs/InjuryIncident/InjryIncdt.aspx.

Failure to submit this information to the Engineers by the 20th day of each month will result in the Department taking actions including, but not limited to withholding estimates and suspending the work. This report will not be paid for directly, but will be considered subsidiary to Items of the contract.

Special Provision to Item 3
Award and Execution of Contract

Item 3, "Award and Execution of Contract" of the Standard Specifications is amended with respect to the clauses cited below. No other clauses or requirements of this Item are waived or changed.

Section 4.2., "Bonds," is supplemented by the following:

On the Department's form, provide a warranty bond executed by either the manufacturer of the warranted items or the Contractor, and a U. S. Treasury listed surety with attached powers of attorney and notification information. The warranty bond will be for the total amount of the items that are warranted and furnished as a guarantee for the protection of the Department for all labor, materials, equipment and other incidentals for the replacement of defective work. The party providing the warranty bond is responsible for meeting the warranty requirements.

Special Provision to Item 6
Control of Materials

For this project, Item 6, "Control of Materials," of the Standard Specifications, is hereby amended with respect to the clauses cited below, and no other clauses or requirements of this Item are waived or changed hereby.

Article 4., "Sampling, Testing, and Inspection," is supplemented by the following:

Meet with the Engineer and choose either the Department or a Department-selected Commercial Lab (CL) for conducting the subset of project-level sampling and testing shown in Table 1, "Select Guide Schedule Sampling and Testing." Selection may be made on a test by test basis. CLs will meet the testing turnaround times shown (includes test time and time for travel/sampling and reporting) and in all cases issue test reports as soon as possible.

If the Contractor chooses a Department-selected CL for any Table 1 sampling and testing:

- notify the Engineer, District Lab, and the CL of project scheduling that may require CL testing;
- provide the Engineer, District Lab, and CL at least 24 hours' notice by phone and e-mail;
- reimburse the Department for CL Table 1 testing using the contract fee schedule for the CL (including mileage and travel/standby time) at the minimum guide schedule testing frequencies;
- reimburse the Department for CL Table 1 testing above the minimum guide schedule frequencies for retesting when minimum frequency testing results in failures to meet specification limits;
- agree with the Engineer and CL upon a policy regarding notification for testing services;
- give any cancellation notice to the Engineer, District Lab, and CL by phone and e-mail;
- reimburse the Department a $150 cancellation fee to cover technician time and mileage charges for previously scheduled work cancelled without adequate notice, which resulted in mobilization of technician and/or equipment by the CL; and
- all CL charges will be reimbursed to the Department by a deduction from the Contractor's monthly pay estimate.

If the CL does not meet the Table 1 turnaround times, testing charge to the Contractor will be reduced by 50% for the first late day and an additional 5% for each succeeding late day.

Approved CL project testing above the minimum testing frequencies in the Guide Schedule of Sampling and Testing, and not as the result of failing tests, will be paid by the Department.

Other project-level Guide Schedule sampling and testing not shown on Table 1 will be the responsibility of the Department.

Table 1
Select Guide Schedule Sampling and Testing (Note 1)

TxDOT Test	Test Description	Turn-Around Time (Calendar days)
	SOILS/BASE	
Tex-101-E	Preparation of Soil and Flexible Base Materials for Testing (included in other tests)	
Tex-104-E	Liquid Limit of Soils (included in 106-E)	
Tex-105-E	Plastic Limit of Soils (included in 106-E)	
Tex-106-E	Calculating the Plasticity Index of Soils	7
Tex-110-E	Particle Size Analysis of Soils	6
Tex-113-E	Moisture-Density Relationship of Base Materials	7
Tex-114-E	Moisture-Density Relationship of Subgrade and Embankment Soil	7
Tex-115-E	Field Method for In-Place Density of Soils and Base Materials	2
Tex-116-E	Ball Mill Method for the Disintegration of Flexible Base Material	5
Tex-117-E, Part II	Triaxial Compression Tests For Disturbed Soils and Base Materials (Part II)	6
Tex-113-E **w/** Tex-117-E	Moisture-Density Relationship of Base Materials **with** Triaxial Compression Tests For Disturbed Soils and Base Materials (Part II)	10
Tex-140-E	Measuring Thickness of Pavement Layer	2
Tex-145-E	Determining Sulfate Content in Soils - Colorimetric Method	4
	HOT MIX ASPHALT	
Tex-200-F	Sieve Analysis of Fine and Coarse Aggregate (dry, from ignition oven with known correction factors)	1 (Note 2)
Tex-203-F	Sand Equivalent Test	3
Tex-206-F, **w/** Tex-207-F, Part I, **w/** Tex-227-F	**(Lab-Molded Density of Production Mixture – Texas Gyratory)** Method of Compacting Test Specimens of Bituminous Mixtures **with** Density of Compacted Bituminous Mixtures, Part I - Bulk Specific Gravity of Compacted Bituminous Mixtures, **with** Theoretical Maximum Specific Gravity of Bituminous Mixtures	1 (Note 2)
Tex-207-F, Part I **&/or** Part VI	**(In-Place Air Voids of Roadway Cores)** Density of Compacted Bituminous Mixtures, Part I- Bulk Specific Gravity of Compacted Bituminous Mixtures **&/or** Part VI - Bulk Specific Gravity of Compacted Bituminous Mixtures Using the Vacuum Method	1 (Note 2)
Tex-207-F, Part V	Density of Compacted Bituminous Mixtures, Part V- Determining Mat Segregation using a Density-Testing Gauge	3
Tex-207-F, Part VII	Density of Compacted Bituminous Mixtures, Part VII - Determining Longitudinal Joint Density using a Density-Testing Gauge	4
Tex-212-F	Moisture Content of Bituminous Mixtures	3
Tex-217-F	Deleterious Material and Decantation Test for Coarse Aggregate	4
Tex-221-F	Sampling Aggregate for Bituminous Mixtures, Surface Treatments, and LRA (included in other tests)	
Tex-222-F	Sampling Bituminous Mixtures (included in other tests)	
Tex-224-F	Determination of Flakiness Index	3
Tex-226-F	Indirect Tensile Strength Test (production mix)	4
Tex-235-F	Determining Draindown Characteristics in Bituminous Materials	3
Tex-236-F (Correction Factors)	Asphalt Content from Asphalt Paving Mixtures by the Ignition Method (Determining Correction Factors)	4
Tex-236-F	Asphalt Content from Asphalt Paving Mixtures by the Ignition Method (Production Mixture)	1 (Note 2)
Tex-241-F **w/** Tex-207-F, Part I, **w/** Tex-227-F	**(Lab-Molded Density of Production Mixture – Superpave Gyratory)** Superpave Gyratory Compacting of Specimens of Bituminous Mixtures (production mixture) **with** Density of Compacted Bituminous Mixtures, Part I- Part I - Bulk Specific Gravity of Compacted Bituminous Mixtures, **with** Theoretical Maximum Specific Gravity of Bituminous Mixtures	1 (Note 2)
Tex-242-F	Hamburg Wheel-Tracking Test (production mix, molded samples)	3
Tex-244-F	Thermal Profile of Hot Mix Asphalt	1
Tex-246-F	Permeability of Water Flow of Hot Mix Asphalt	3
Tex-280-F	Flat and Elongated Particles	3
Tex-530-C	Effect of Water on Bituminous Paving Mixtures (production mix)	4

AGGREGATES		
Tex-400-A	Sampling Flexible Base, Stone, Gravel, Sand, and Mineral Aggregates	3
Tex-410-A	Abrasion of Coarse Aggregate Using the Los Angeles Machine	5
Tex-411-A	Soundness of Aggregate by Use of Sodium Sulfate or Magnesium Sulfate	12
Tex-461-A	Degradation of Coarse Aggregate by Micro-Deval Abrasion	5
CHEMICAL		
Tex-612-J	Acid Insoluble Residue for Fine Aggregate	4
GENERAL		
HMA Production Specialist [TxAPA – Level 1-A] ($/hr)		
HMA Roadway Specialist [TxAPA – Level 1-B] ($/hr)		
Technician Travel/Standby Time ($/hr)		
Per Diem ($/day – meals and lodging)		
Mileage Rate ($/mile from closest CL location)		

Note 1– Turn-Around Time includes test time and time for travel/sampling and reporting.
Note 2 – These tests require turn-around times meeting the governing specifications. Provide test results within the stated turn-around time. CL is allowed one additional day to provide the signed and sealed report.

Special Provision to Item 7
Legal Relations and Responsibilities

Item 7, "Legal Relations and Responsibilities," of the Standard Specifications is amended with respect to the clauses cited below. No other clauses or requirements of this Item are waived or changed.

Section 7.2.6.5, "Training," is supplemented by the following:

Coordinate enrollment, pay associated fees, and successfully complete Department-approved Training or Contractor-developed Training. Training is valid for the period prescribed by the provider. If no training period is prescribed by the provider, then training is valid for 3 yrs. from the date of completion. The Engineer may require training at a frequency in lieu of the period prescribed based on the Department's needs. Training and associated fees will not be measured or paid for directly but are considered subsidiary to pertinent Items.

2.6.5.1. **Department-approved Training.** Department-approved training is listed below. For Section 7.2.6.5.1.4., "Other Work Zone Personnel", the Contractor may use Contractor-developed Training in lieu of Department-approved Training.

2.6.5.1.1 **Contractor Responsible Person and Alternate.**

Provider	Course Title
American Traffic Safety Services Association	Traffic Control Supervisor
National Highway Institute[1]	Design and Operation of Work Zone Traffic Control, Work Zone Traffic Control for Maintenance Operations
Texas Engineering Extension Service	Work Zone Traffic Control for CRPs
University of Texas Arlington, Division for Enterprise Development	Traffic Control Supervisor

1. Both classes are required in order to equal the level of training taught in a single class by other providers.

2.6.5.1.2. **Flagger Instructor Training.**

Provider	Course Title
American Traffic Safety Services Association	Flagging Instructor Training
Texas Engineering Extension Service	Train-the-Trainer Flaggers
National Safety Council	Flagger Instructor Training
University of Texas at Arlington, Division for Enterprise Development	Certified Instructor: Qualified Flagger Training

Flagger Training.

Provider	Course Title
Texas Engineering Extension Service	Flaggers in the Work Zone
National Safety Council	Work Zone Flagger (Flagger Novice)
University of Texas Arlington, Division for Enterprise Development	Flaggers in Work Zones
University of Texas at Arlington, Division for Enterprise Development	Work Zone Traffic Control & Qualified Flagger
Associated Builders and Contractors, Austin Chapter	Flagger Training

2.6.5.1.3. **Law Enforcement Personnel.**

Provider	Course Title
National Highway Institute	Safe and Effective Use of Law Enforcement Personnel in Work Zones

2.6.5.1.4. **Other Work Zone Personnel.**

Provider	Course Title
American Traffic Safety Services Association	Traffic Control Technician
Texas Engineering Extension Service	Work Zone Traffic Control
National Highway Institute	Maintenance of Traffic for Technicians
National Highway Institute	Maintenance Training Series: Basics of Work Zone Traffic Control
University of Texas at Arlington, Division for Enterprise Development	Temporary Traffic Control

2.6.5.2. **Contractor-developed Training.** Develop and deliver Contractor-developed Training meeting the minimum requirements established by the Department. The outline for this training must be submitted to the Engineer for approval at the preconstruction meeting. The CRP or designated alternate may deliver the training in lieu of the Department-approved training. The work performed and materials furnished to develop and deliver the training will not be measured or paid for directly but will be considered subsidiary to pertinent Items.

2.6.5.2.1 **Flagger Training Minimum Requirements.** A Contractor's certified flagging instructor is permitted to train other flaggers.

2.6.5.2.2 **Other Work Zone Personnel Minimum Requirements.** Contractor-developed Training must provide information on the use of personnel protection equipment, occupational hazards and health risks, and other pertinent topics related to traffic management. The type and amount of training will depend on the job duties and responsibilities. Develop training applicable to the work being performed. Develop training to include the following topics:

- The Life You Save May Be Your Own (or other similar company safety moto)
- Purpose of the Training
  - It's The Law

- To make work zones safer for workers and motorist
- To understand what is needed for traffic control
- To save lives including your own

■ Personal and Co-Worker Safety

- High Visibility Safety Apparel: Discuss compliant requirements; Inspect regularly for fading and reduced reflective properties; If night operations are required, discuss the additional and appropriate required apparel in addition to special night work risks; If moving operations are underway, discuss appropriate safety measures specific to the situation and traffic control plan.
- Blind Areas: A blind area is the area around a vehicle or piece of construction equipment not visible to the operators, either by line of sight or indirectly by mirrors. Discuss the "Circle of Safety" around equipment and vehicles; Use of spotters; Maintain eye contact with equipment operators; Use of hand signals.
- Runovers and Backovers: Remain alert at all times; Keep a safe distance from traffic; Avoid turning your back to traffic and if you must then use a spotter; Stay behind protective barriers, whenever possible. Note: It is not safe to sit on or lean against a concrete barrier, these barriers can deflect 4+ feet when struck by a vehicle.
- Look out for each other, warn co-workers
- Be courteous to motorists
- Do not run across active roadways
- Workers must obey traffic laws and drive courteously while operating vehicles in the work zones.
- Workers must be made aware of company distracted driving policies

■ Night Time Operations: Focus should be placed on projects with a nighttime element.

■ Traffic Control Training: Basics of Traffic Control.

- Identify Work Zone Traffic Control Supervisor and other appropriate persons to report issues to when they arise.
- Work Zone Traffic Control Devices must be in clean and in undamaged condition. If devices have been hit but not damaged, put back in their correct place and report to traffic control supervisor. If devices have been damaged, replace with new one and report to traffic control supervisor. If devices are dirty, faded or have missing or damaged reflective tape clean or replace and report to traffic control supervisor. Show examples of non-acceptable device conditions. Discussion on various types of traffic control devices to be used and where spacing requirements can be found.
- Channelizing Devices and Barricades with slanted stripes: Stripes are to slant in the direction you want traffic to stay or move to; Demonstrate this with a device.
- Traffic Queuing: Workers must be made aware of traffic queuing and the dangers created by it. Workers must be instructed to immediately notify the traffic control supervisor and other supervisory personnel if traffic is queuing beyond advance warning sign and devices or construction limits.
- Signs: Signs must be straight and not leaning. Report problems to the traffic control supervisor or other as designated for immediate repair. Covered signs must be fully covered. If covers are damaged or out of place, report to traffic control supervisor or other as designated.

Special Provision to Item 7
Legal Relations and Responsibilities

Item 7, "Legal Relations and Responsibilities" of the Standard Specifications is amended with respect to the clauses cited below. No other clauses or requirements of this Item are waived or changed.

Article 7.3., "Laws To Be Observed," is supplemented by the following:

By entering into Contract, the Contractor expressly grants and allows the Department and all other interested federal and state agencies access to all Contractor records related to the Contract, record-keeping systems, and any information considered relevant. Failure to provide access may result in action by the Department.

Special Provision to Item 8
Prosecution and Progress

Item 8, "Prosecution and Progress" of the Standard Specifications is amended with respect to the clauses cited below. No other clauses or requirements of this Item are waived or changed.

Article 8.1., "Prosecution of Work." The first sentence of the first paragraph is voided and replaced by the following:

Begin work 90 calendar days after the authorization date to begin work. Do not begin work before or after this period unless authorized in writing by the Engineer.

Special Provision to Item 506
Temporary Erosion, Sedimentation, and Environmental Controls

For this project, Item 506, "Temporary Erosion, Sedimentation, and Environmental Controls," of the Standard Specifications, is hereby amended with respect to the clauses cited below, and no other clauses or requirements of this Item are waived or changed hereby.

Article 506.1., "Description," is voided and replaced by the following:

Install, maintain, and remove erosion, sedimentation, and environmental control measures to prevent or reduce the discharge of pollutants in accordance with the Storm Water Pollution Prevention Plan (SWP3) or as directed. Ensure the installation and maintenance of control measures is performed in accordance with the manufacturer's or designer's specifications. Erosion and sediment control devices must be selected from the "Erosion Control Approved Products" or "Sediment Control Approved Products" lists. Perform work in a manner to prevent degradation of receiving waters, facilitate project construction, and comply with applicable federal, state, and local regulations.

Article 506.3., "Qualifications, Training, and Employee Requirements," is voided and not replaced.

Section 506.4.1., "Contractor Responsibilities," Section 506.4.2., "Implementation," and Section 506.4.3., "General," are voided and replaced by the following:

4.1. **Contractor Responsibilities**. Implement the SWP3 for the project site in accordance with the plans and specifications, and as directed. Coordinate storm water management with all other work on the project. Develop and implement an SWP3 for project-specific material supply plants within and outside of the Department's right of way in accordance with the specific or general storm water permit requirements. Prevent water pollution from storm water associated with construction activity from entering any surface water or private property on or adjacent to the project site.

4.2. **Implementation**.

4.2.1. **Commencement**. Implement the SWP3 as shown and as directed. Contractor proposed recommendations for changes will be allowed as approved. Do not implement changes until approval has been received and changes have been incorporated into the plans by the Engineer. Minor adjustments to meet field conditions are allowed and will be recorded by the Engineer in the SWP3.

Implement control measures before the commencement of activities that result in soil disturbance. Phase and minimize the soil disturbance to the areas shown on the plans. Coordinate temporary control measures with permanent control measures and all other work activities on the project to assure economical, effective, safe, continuous water pollution prevention. Provide control measures that are appropriate to the construction means, methods, and sequencing allowed by the Contract.

Do not prolong final grading and shaping. Preserve vegetation where possible throughout the project and minimize clearing, grubbing, and excavation within stream banks, bed, and approach sections.

4.3. **General**.

4.3.1. **Temporary Alterations or Control Measure Removal**. Altering or removal of control measures is allowed when control measures are restored within the same working day.

4.3.2. **Stabilization**. Initiate stabilization for disturbed areas no more than 14 days after the construction activities in that portion of the site has temporarily or permanently ceased. Establish a uniform vegetative cover or use another stabilization practice as approved.

4.3.3. **Finished Work**. Upon the Engineer's acceptance of vegetative cover or other stabilization practice, remove and dispose of all temporary control measures unless otherwise directed. Complete soil disturbing activities and establish a uniform perennial vegetative cover. A project will not be considered for acceptance until a vegetative cover of 70% density of existing adjacent undisturbed areas is obtained or equivalent permanent stabilization is obtained as approved.

4.3.4. **Restricted Activities and Required Precautions**. Do not discharge onto the ground or surface waters any pollutants such as chemicals, raw sewage, fuels, lubricants, coolants, hydraulic fluids, bitumens, or any other petroleum product. Operate and maintain equipment on site in a manner as to prevent actual or potential water pollution. Manage, control, and dispose of litter on site such that no adverse impacts to water quality occur. Prevent dust from creating a potential or actual unsafe condition, public nuisance, or condition endangering the value, utility, or appearance of any property. Wash out concrete trucks only in approved contained areas. Use appropriate controls to minimize the offsite transport of suspended sediments and other pollutants if it is necessary to pump or channel standing water (i.e. dewatering). Prevent discharges that would contribute to a violation of Edwards Aquifer Rules, water quality standards, the impairment of a listed water body, or other state or federal law.

Section 506.4.4., "Installation, Maintenance, and Removal Work." The first paragraph is voided and replaced by the following.

Perform work in accordance with the SWP3, and according to the manufacturers' guidelines. Install and maintain the integrity of temporary erosion and sedimentation control devices to accumulate silt and debris until soil disturbing activities are completed and permanent erosion control features are in place or the disturbed area has been adequately stabilized as determined by the Engineer.

Section 506.4.5., "Monitoring and Documentation," is voided and not replaced.

Section 506.6.5.2., "Maintenance Earthwork for Erosion and Sediment Control for Cleaning and/or Restoring Control Measures," is voided and replaced by the following:

Earthwork needed to remove and obliterate of erosion-control features will not be paid for directly but is subsidiary to pertinent Items unless otherwise shown on the plans.

Sprinkling and rolling required by this Item will not be paid for directly but will be subsidiary to this Item.

Section 01110

SUMMARY OF WORK

PART 1 GENERAL

1.01 SECTION INCLUDES

A. Summary of the Work including work by the City, work sequence, future work, Contractor use of Premises, special conditions for substantial completion and City occupancy.

1.02 WORK COVERED BY CONTRACT DOCUMENTS

A. Work of the Contract is for the construction of the Missouri Kansas Texas (MKT) Trail Spur Connector and includes 842 feet of 10 feet wide concrete bike trail, a 120 foot span pedestrian steel truss bridge (14 feet clear width), drainage culverts including headwalls, 4,752 feet of retaining wall, and all signs, rails and appurtenances to complete the bike trail. Construction access will occur from both ends of the project.

B. Contractor's Responsibilities:

1. Arrange and pay for Product delivery to the site.

2. Receive and unload Products at the site; jointly with the City, inspect for completeness or damage.

3. Handle, store, install, and finish Products.

4. Repair or replace damaged items.

1.03 WORK SEQUENCE

A. Construct the Work in Phases during the construction period, coordinate construction schedule and operations with the City: NO PHASES FOR THIS PROJECT

B. For projects with no Phases, do not disturb more than 50% of total project linear feet of disturbed right-of-way and easement until site restored in accordance with Section 01740 – Site Restoration.

C. Coordination of the Work: Refer to Section 01312 - Coordination and Meetings.

1.04 CONTRACTOR USE OF PREMISES

A. Comply with procedures for access to the site and Contractor's use of rights-of-way as specified in Section 01145 - Use of Premises.

B. Construction Operations: Limited to the City's rights-of-way provided by the City and areas shown or described in the Contract documents.

C. Utility Outages and Shutdown: Provide a minimum of 48 hours notice to the City and private utility companies (when applicable), excluding weekends and holidays, in advance of required utility shutdown. Coordinate all work as required.

1.05 STREET CUT ORDINANCE

A. Excavations on or under pavement in the City's right-of-way must have a permit. Comply with City of Houston, Texas Ordinance No. 2000-1115, an ordinance amending Chapter 40 of the Code of Ordinances, Houston, Texas, relating to excavating in the Public right-of-way.

B. Comply with the latest edition of street cut New Pavement Repair and Pavement Replacement details.

C. Quantities are included for street cut pavement repair and replacement in applicable Specification sections for Unit Price contracts.

D. Include payment for street cut pavement repair and replacement in lump sum bid for Stipulated Price contracts.

1.06 WARRANTY

A. Comply with warranty requirements in accordance with Document 00700 - General Conditions.

1.07 ADDITIONAL CONDITIONS FOR SUBSTANTIAL COMPLETION

A. In addition to requirements outlined in Document 00700 – General Conditions, for Contractor to be substantially complete with the Work and call for inspection by Project Manager to confirm, the following conditions must be met or completed:

1. All testing shall be completed and accepted by Project Manager.

B. No additional_condition described in Paragraph 1.07 may be included in Contractor's punch list.

PART 2 P R O D U C T S - Not Used

PART 3 E X E C U T I O N - Not Used

END OF SECTION

1.05 STREET CUT ORDINANCE

A. Excavations on or under pavement in the City's right-of-way must have a permit. Comply with City of Houston, Texas Ordinance No. 2000-1115, an ordinance amending Chapter 40 of the Code of Ordinances, Houston, Texas, relating to excavating in the Public right-of-way.

B. Comply with the latest edition of street cut New Pavement Repair and Pavement Replacement details.

C. Quantities are included for street cut pavement repair and replacement in applicable Specification sections for Unit Price contracts.

D. Include payment for street cut pavement repair and replacement in lump sum bid for Stipulated Price contracts.

1.06 WARRANTY

A. Comply with warranty requirements in accordance with Document 00700 - General Conditions.

1.07 ADDITIONAL CONDITIONS FOR SUBSTANTIAL COMPLETION

A. In addition to requirements outlined in Document 00700 – General Conditions, for Contractor to be substantially complete with the Work and call for inspection by Project Manager to confirm, the following conditions must be met or completed:

1. All testing shall be completed and accepted by Project Manager.

B. No additional condition described in Paragraph 1.07 may be included in Contractor's punch list.

PART 2 P R O D U C T S - Not Used

PART 3 E X E C U T I O N - Not Used

END OF SECTION

Section 01145

USE OF PREMISES

1.01 SECTION INCLUDES

A. General use of the site including properties inside and outside of rights-of-way, work affecting road, ramps, streets and driveways and notification to adjacent occupants.

1.02 RIGHTS-OF-WAY

A. Confine access, and operations and storage areas to rights-of-way provided by the City as stipulated in Document 00700 - General Conditions; trespassing on abutting lands or other lands in the area is not allowed.

B. Make arrangements, at no cost to the City, for temporary use of private properties. Contractor and Surety shall indemnify and hold harmless the City against claims or demands arising from such use of properties outside of rights-of-way. Submit a copy of agreements between private property owners and Contractor prior to use of the area. Agreements between private property owners and Contractor shall be notarized or bear the signatures of two witnesses.

C. Obtain written permission from City of Houston Parks and Recreation Department for storage of materials on esplanades and other areas within rights-of-way under that department's jurisdiction. Submit copies of written permission prior to use of the area.

D. Restrict total length of distributed materials along the route of construction to 1,000 linear feet unless otherwise approved in writing by City Engineer.

1.03 PROPERTIES OUTSIDE OF RIGHTS-OF-WAY

A. Do not alter the condition of properties adjacent to and along rights-of-way.

B. Do not use ways, means, methods, techniques, sequences, or procedures that result in damage to properties or improvements.

C. Restore damaged properties outside of rights-of-ways at no cost to the city

1.04 USE OF SITE

A. Obtain approvals from governing authorities prior to impeding or closing public roads and streets. Do not close more than two consecutive intersections at one time.

B. Notify Project Manager and Public Works and Engineering Traffic Management Branch at least five working days prior to closing a street or street crossing. Obtain permits for street closures in advance.

C. Maintain 10-foot-wide minimum access lanes for emergency vehicles including access to fire hydrants.

D. Avoid obstructing drainage ditches or inlets. When obstruction is unavoidable due to requirements of the Work, provide grading and temporary drainage structures to maintain unimpeded flow.

E. Locate and protect private lawn sprinkler systems that may exist within the site. Repair or replace damaged systems to condition existing at start of the Work, or better. Test irrigation system prior to construction.

F. Conform to daily clean-up requirements of Article 3 of Document 00700 - General Conditions.

G. Beware of overhead power lines existing in area and in close proximity of the Project. When 10 feet of clearance between energized overhead power line and construction-related activity cannot be maintained, request Center Point Energy (CPE) de-energize or move conflicting overhead power line. Contact CPE representatives at (713) 207-2222. Schedule, coordinate and pay costs associated with de-energizing or moving conflicting overhead power lines. When there is no separate pay item for this effort, include these costs in various items of bid that make such work necessary.

1.05 NOTIFICATION TO ADJACENT OCCUPANTS

A. Notify individual occupants in areas to be effected by the Work of proposed construction and time schedule. Notify not less than 72 hours or more than two weeks prior to work performed within 200 feet of homes or businesses. Follow form and content of sample door hanger provided by Project Manager.

B. Include in notification nature of the Work, and names and telephone numbers of two company representatives for resident contact available on 24-hour call.

C. Submit proposed notification to Project Manager for approval. Consider ethnicity of the neighborhood where English is not the dominant language. Provide notice in an understandable language.

1.06 PUBLIC, TEMPORARY, AND CONSTRUCTION ROADS AND RAMPS

A. Construct and maintain temporary detours, ramps, and roads to provide for normal public traffic flow when it is necessary to close public roads or streets.

B. Provide mats or other means to prevent overloading or damage to existing roadways from tracked equipment, large tandem axle trucks or equipment that will damage the existing roadway surfaces.

C. Construct and maintain access roads and parking areas as specified in Section 01504 - Temporary Facilities and Controls.

1.07 EXCAVATION IN STREETS AND DRIVEWAYS

A. Avoid hindering or inconveniencing public travel on streets or intersecting alleys for more than two blocks at any one time, except by permission of City Engineer.

B. Obtain Traffic Management Branch and City Engineer's approval when nature of the Work requires closure of an entire street. Permits required for street closure are Contractor's responsibility. Avoid unnecessary inconvenience to abutting property owners.

C. Remove surplus materials and debris and open each block for public use, as work in that block is complete.

D. Acceptance of any portion of the Work will not be based on return of street to public use.

E. Avoid obstructing driveways or entrances to private property.

F. Provide temporary crossings or complete excavation and backfill in one continuous operation to minimize duration of obstruction when excavation is required across drives or entrances.

G. Provide barricades and signs in accordance with Section VI of the State of Texas Manual on Uniform Traffic Control Devices.

1.08 TRAFFIC CONTROL

A. Comply with traffic regulation as specified in Section 01555 - Traffic Control and Regulation.

1.09 SURFACE RESTORATION

A. Restore the site including landscaping to the condition existing before construction, or better.

B. Repair paved areas per the requirements of Section 02951 - Pavement Repair and restoration.

C. Repair damaged turf areas, level with bank run sand conforming to Section 02317 - Excavation and Backfill for Utilities, or topsoil conforming to Section 02911 - Topsoil, and re-sod in accordance with Section 02922 - Sodding. Water and level newly sodded areas with adjoining turf using appropriate steel wheel rollers for sodding. Do not use spot sodding or sprigging.

1.10 LIMITS OF CONSTRUCTION

A. Confine operations to lands within construction work limits shown on Drawings. Unless otherwise noted on Drawings adhere to the following:

1. Where utility alignment is within esplanade, and construction limits are shown on Drawings to extend to edge of esplanade, keep equipment, materials, stockpiles a minimum of five feet from back of curb.

2. Where construction limits shown on Drawings extend to property line, keep sidewalks free of equipment, materials, and stockpiles.

1.11 EQUIPMENT AND MATERIAL SALVAGE

A. Upon completion of the Work, carefully remove salvageable equipment and material. Deliver them to City of Houston as directed by Project Manager. Dispose of equipment offsite at no additional cost to the City when Project Manager deems equipment unfit for further use.

PART 2 P R O D U C T S - Not Used

PART 3 E X E C U T I O N - Not Used

END OF SECTION

Section 01255

CHANGE ORDER PROCEDURES

PART 1 GENERAL

1.01 SECTION INCLUDES

A. Procedures for processing Change Orders, including:

1. Assignment of a responsible individual for approval and communication of changes in the Work;
2. Documentation of change in Contract Price and Contract Time;
3. Change procedures, using proposals and Modifications;
4. Execution of Change Orders;
5. Correlation of Contractor submittals.

1.02 REFERENCES

A. Blue Book is defined as the Rental Rate Blue Book for Construction Equipment (a.k.a. Data Quest Blue Book).

B. Rental Rate is defined as the full-unadjusted base rental rate for the appropriate item of construction equipment.

1.03 RESPONSIBLE INDIVIDUAL

A. Provide a letter indicating the name and address of the individual authorized to execute Modifications, and who will be responsible for informing others in Contractor's employ and Subcontractors of changes to the Work. Provide this information at the pre-construction meeting.

1.04 DOCUMENTATION OF CHANGE IN CONTRACT PRICE AND CONTRACT TIME

A. Maintain detailed records of changes in the Work. Provide full information required for identification and evaluation of proposed changes, and substantiate costs of changes in the Work.

B. Document each proposal for change in Contract Price or Contract Time with sufficient data to allow evaluation of proposal.

C. Include the following minimum information on proposals:

1. Quantities of items in original Document 00410 – Bid Form with additions, reductions, deletions, and substitutions.

2. Quantities and cost of items in original Schedule of Values with additions, reductions, deletions and substitutions.

3. Provide Unit Prices for new items, with supporting information, for inclusion in Schedule of Unit Price Work.

4. Justification for changes in Contract Time.

5. Additional data upon request.

D. For changes in the Work performed on a time-and-material basis, provide the following additional information:

1. Quantities and description of Products.

2. Taxes, insurance and Bonds.

3. Overhead and profit as noted in Document 00700 - General Conditions.

4. Dates, times and by who work was performed.

5. Time records and certified copies of applicable payrolls.

6. Invoices and receipts for Products, rental equipment, and subcontracts, similarly documented.

E. For changes in the Work performed on a time-and-materials basis, rental equipment is paid as follows:

1. Actual invoice cost for duration of time required to complete extra work without markup for overhead and profit. When extra work comprises only a portion of a rental invoice where equipment would otherwise be on site, compute hourly equipment rate by dividing the actual monthly invoice by 176. One day equals eight hours and one week equals 40 hours.

2. Do not exceed estimated operating costs given in Blue Book for items of equipment. Overhead and profit will be allowed on the operating cost.

F. For changes in the Work performed on a time-and-materials basis using Contractor-owned equipment, use Blue Book rates as follows:

1. Contractor-owned equipment will be paid at the Blue Book Rental Rate for the duration of time required to complete extra work without markup for overhead and profit. Utilize lowest cost combination of hourly, daily, weekly or monthly rates. Use 150 percent of Rental Rate for double shifts, one extra shift per day, and 200 percent of Rental Rate for more than two shifts per day. Standby rates shall be 50 percent of the appropriate Rental Rate shown in Blue Book. No other rate adjustments apply.

2. Do not exceed estimated operating costs given in Blue Book. Overhead and profit will be allowed on operating costs. Operating costs will not be allowed for equipment on standby.

1.05 CHANGE PROCEDURES

A. Changes to Contract Price or Contract Time can only be made by issuance of Document 00941 - Change Order. Issuance of Document 00940 - Work Change Directive will be formalized into a Change Order. Changes will be in accordance with requirements of Document 00700 - General Conditions.

B. City Engineer will advise of Minor Changes in the Work as authorized by the Document 00700 - General Conditions by issuing Document 00942 – Minor Change.

C. Request clarification of Drawings, Specifications, Contract documents or other information by using Document 00931- Request for Information. Response by Project Manager to Requests for Information does not authorize Contractor to perform tasks outside scope of the Work. Changes must be authorized as described in this Section.

1.06 PROPOSALS AND CONTRACT MODIFICATIONS

A. Project Manager may issue Document 00932- Request for Proposal, which includes a detailed description of the proposed change with supplementary or revised Drawings and Specifications. Project Manager may also request a proposal in response to a Request for Information. Prepare and submit the proposal within seven days or as specified in request.

B. Submit requests for Contract changes to City Engineer describing proposed change and its full effect on the Work, with a statement describing reason for change and effect on Contract Price and Contract Time including full documentation.

C. Design Consultant may review Change Orders.

1.07 WORK CHANGE DIRECTIVE

A. City Engineer may issue a signed Work Change Directive instructing Contractor to proceed with a change in the Work. Work Change Directive will subsequently be incorporated into a Change Order.

B. Work Change Directives will describe changes in the Work and designate the method of determining change in Contract Price or Contract Time.

C. Proceed promptly to execute changes in the Work in accordance with the Work Change Directive.

1.08 STIPULATED PRICE CHANGE ORDER

A. A Stipulated Price Change Order will be based on an accepted proposal.

1.09 UNIT PRICE CHANGE ORDER

A. Where Unit Prices for affected items of the Work are included in Document 00410 – Bid Form, the Change Order will be based on Unit Prices, subject to Articles 7 and 9 of Document 00700 - General Conditions.

B. Where Unit Prices of the Work are not pre-determined in Document 00410-Bid Form, the Work Change Directive or accepted proposal will specify the Unit Prices to be used.

1.10 TIME-AND-MATERIAL CHANGE ORDER

A. Provide itemized account and supporting data after completion of change, within time limits indicated for claims in Document 00700 - General Conditions.

B. City Engineer will determine the change allowable in Contract Price and Contract Time as provided in Document 00700 - General Conditions.

C. Maintain detailed records for work done on time-and-material basis as specified in Paragraph 1.04 above.

D. Provide full information required for evaluation of changes and substantiate costs for changes in the Work.

1.11 EXECUTION OF CHANGE DOCUMENTATION

A. City Engineer will issue Change Orders, Work Change Directives, or Minor Change in the Work for signatures of Parties as described in Document 00700 - General Conditions.

1.12 CORRELATION OF CONTRACTOR SUBMITTALS

A. For Stipulated Price Contracts, promptly revise Schedule of Values and Application for Payment forms to record authorized Change Orders as separate line item.

B. For Unit Price Contracts, the next monthly estimate of the Work after acceptance of a Change Order will be revised to include new items not previously included with appropriate Unit Prices.

C. Promptly revise progress schedules to reflect change in Contract Time, and to adjust time for other items of work affected by the change, and resubmit for review.

D. Promptly enter changes to on-site and record copies of Drawings, Specifications or Contract documents as required in Section 01785 - Project Record Documents.

PART 2 P R O D U C T S - Not Used

PART 3 E X E C U T I O N - Not Used

END OF SECTION

Section 01270

MEASUREMENT AND PAYMENT

PART 1 GENERAL

1.01 SECTION INCLUDES

A. Procedures for measurement and payment plus conditions for nonconformance assessment and nonpayment for rejected Products.

1.02 AUTHORITY

A. Measurement methods delineated in Specification sections are intended to complement criteria of this Section. In event of conflict, requirements of the Specification section shall govern.

B. Project Manager will take all measurements and compute quantities accordingly.

C. Assist by providing necessary equipment, workers, and survey personnel.

D. Measurement and Payment paragraphs are included only in those Specification sections of Division 01 where direct payment will be made. Include costs in the total bid price for those Specification sections in Division 01 that do not contain Measurement and Payment paragraphs,

1.03 UNIT QUANTITIES SPECIFIED

A. Quantity and measurement estimates stated in the Agreement are for contract purposes only. Quantities and measurements supplied or placed in the Work and verified by Project Manager will determine payment as stated in Article 9 of Document 00700 - General Conditions.

B. When actual work requires greater or lesser quantities than those quantities indicated in Document 00410 – Bid Form, provide required quantities at Unit Prices contracted, except as otherwise stated in Article 9 of Document 00700 - General Conditions.

1.04 MEASUREMENT OF QUANTITIES

A. Measurement by Weight: Reinforcing steel, rolled or formed steel or other metal shapes are measured by CRSI or AISC Manual of Steel Construction weights. Welded assemblies are measured by CRSI or AISC Manual of Steel Construction or scale weights.

B. Measurement by Volume:

1. Stockpiles: Measured by cubic dimension using mean length, width, and height or thickness.

2. Excavation and Embankment Materials: Measured by cubic dimension using average end area method.

C. Measurement by Area: Measured by square dimension using mean length and width or radius.

D. Linear Measurement: Measured by linear dimension, at item centerline or mean chord.

E. Stipulated Price Measurement: By unit designated in the Agreement.

F. Other: Items measured by weight, volume, area, or linear means or combination, as appropriate, as completed item or unit of the Work.

G. Measurement by Each: Measured by each instance or item provided.

H. Measurement by Lump Sum: Measure includes all associated work.

1.05 PAYMENT

A. Payment includes full compensation for all required supervision, labor, Products, tools, equipment, plant, transportation, services, and incidentals; and erection, application or Installation of an item of the Work; and Contractor's overhead and profit.

B. Total compensation for required Unit Price work shall be included in Unit Price bid in Document 00410 – Bid Form. Claims for payment as Unit Price work, but not specifically covered in the list of Unit Prices contained in Document 00410 – Bid Form, will not be accepted.

C. Interim payments for stored materials will be made only for materials to be incorporated under items covered in Unit Prices, unless disallowed in Document 00800 - Supplementary Conditions.

D. Progress payments will be based on Project Manager's observations and evaluations of quantities incorporated in the Work multiplied by Unit Price.

E. Final payment for work governed by Unit Prices will be made on the basis of actual measurements and quantities determined by Project Manager multiplied by the Unit Price for work which is incorporated in or made necessary by the Work.

1.06 NONCONFORMANCE ASSESSMENT

A. Remove and replace work, or portions of the Work, not conforming to the Contract documents.

B. When not practical to remove and replace work, City Engineer will direct one of the following remedies:

1. Nonconforming work will remain as is, but Unit Price will be adjusted lower at discretion of City Engineer.

2. Nonconforming work will be modified as authorized by City Engineer, and the Unit Price will be adjusted lower at the discretion of City Engineer, when modified work is deemed less suitable than specified.

C. Specification sections may modify the above remedies or may identify a specific formula or percentage price reduction.

D. Authority of City Engineer to assess nonconforming work and identify payment adjustment is final.

1.07 NONPAYMENT FOR REJECTED PRODUCTS

A. Payment will not be made for any of the following:

1. Products wasted or disposed of in an unacceptable manner.

2. Products determined as nonconforming before or after placement.

3. Products not completely unloaded from transporting vehicles.

4. Products placed beyond lines and levels of required work.

5. Products remaining on hand after completion of the Work, unless specified otherwise.

6. Loading, hauling, and disposing of rejected Products.

PART 2 P R O D U C T S - Not Used

PART 3 E X E C U T I O N - Not Used

END OF SECTION

Section 01312

COORDINATION AND MEETINGS

PART 1 GENERAL

1.01 SECTION INCLUDES

A. General coordination including pre-construction meeting, site mobilization conference, and progress meetings.

1.02 COORDINATION OF DOCUMENTS

A. Coordination is required throughout documents. Refer to Contract documents and coordinate as necessary.

1.03 CONTRACTOR COORDINATION

A. Coordinate scheduling, submittals, and work of various Specification sections to assure efficient and orderly sequence of Installation of interdependent construction elements.

B. Coordinate completion and clean up of the Work prior to the Date of Substantial Completion and for portions of the Work designated for City's partial occupancy.

C. Coordinate access to the site for correction of nonconforming work to minimize disruption of the City's activities where the City is in partial occupancy.

1.04 PRE-CONSTRUCTION MEETING

A. Project Manager will schedule pre-construction meeting.

B. Attendance Required: City representatives, Design Consultant, special consultants as required by Project Manager, Contractor, and major Subcontractors and Suppliers.

C. Agenda:

1. Distribution of Contract documents.

2. Designation of personnel representing the Parties and Design Consultant.

3. Review of insurance.

4. Discussion of formats for Schedule of Values and Construction Schedule.

5. Procedures and processing of Shop Drawings, substitutions, pay estimates or Applications for Payment, Requests for Information, Requests for Proposal, Modifications, and the Contract closeout, other submittals.

6. Scheduling of the Work and coordination with other contractors.

7. Review of Subcontractors and Suppliers.

8. Appropriate agenda items listed for the site mobilization conference, Paragraph 1.05.C, when pre-construction meeting and site mobilization conference are combined.

9. Procedures for testing.

10. Procedures for maintaining record documents.

1.05 SITE MOBILIZATION CONFERENCE

A. When required by Contract documents, Project Manager will schedule a conference at the Project site prior to Contractor mobilization.

B. Attendance Required: City representatives, Design Consultant, special consultants, Superintendent, and major Subcontractors.

C. Agenda:

1. Use of premises by the City and Contractor.

2. Safety and first aid procedures.

3. Construction controls provided by the City.

4. Temporary utilities.

5. Survey and layout.

6. Security and housekeeping procedures.

7. Field office requirements.

1.06 PROGRESS MEETINGS

A. Hold meetings at Project field office or other location designated by Project Manager. Hold meetings at monthly intervals, or more frequently when directed by Project Manager.

B. Attendance Required: Superintendent, major Subcontractors and Suppliers, City representatives, Design Consultant and its subconsultants as appropriate for agenda topics for each meeting.

C. Project Manager will make arrangements for meetings, and for recording minutes.

D. Project Manager will prepare the agenda and preside at meetings.

E. Provide required information and be prepared to discuss each agenda item.

F. Agenda:

1. Review minutes of previous meetings.
2. Review of construction schedule, pay estimates, cash flow curve, payroll and compliance submittals.
3. Field observations, problems, and necessary decisions.
4. Identification of problems that impede planned progress.
5. Review of submittal schedule and status of submittals.
6. Review of RFI and RFP status.
7. Modification status.
8. Review of off-site fabrication and delivery schedules.
9. Maintenance of Construction Schedule.
10. Corrective measures to regain Construction Schedule.
11. Planned progress during the succeeding work period.
12. Coordination of projected progress.
13. Maintenance of quality and work standards.

14. Effect of proposed Modifications on Construction Schedule and coordination.

15. Review Project Record Contract Drawings.

16. Other item relating to the Work.

PART 2 P R O D U C T S - Not Used

PART 3 E X E C U T I O N - Not Used

END OF SECTION

Section 01321

CONSTRUCTION PHOTOGRAPHS

PART 1 GENERAL

1.01 SECTION INCLUDES

A. Photographic requirements for construction photographs and submittals.

1.02 DEFINITIONS

A. Pre-construction Photographs: Photographs taken, in sufficient numbers and detail, prior to Date of Commencement of the Work, to show original construction site conditions.

B. Progress Photographs: Photographs, taken throughout the duration of construction at regular intervals and from fixed vantage points, pre-approved by the City, that document progress of the Work.

C. Finished Photographs: Photographs, taken by a professional photographer near Date of Substantial Completion and before City Council's acceptance of the Work, that are suitable for framing and for use in brochures or on the Internet

1.03 SUBMITTALS

A. Refer to Section 01330, Submittal Procedures, for submittal requirements.

B. Format and Media. Film or digital photography may be used. Submit color photographs, unless otherwise specified.

1. Prints. Submit each Progress or Pre-construction Photograph print in a three-hole plastic pocket or sleeve, bound in a three-ring notebook. Produce prints on photographic-quality paper approved by Project Manager. Minimum size for Pre-construction Photograph prints shall be 3-inches by 5-inches. Progress Photograph prints shall be 8-inches by 10-inches.

2. Film. Use 35mm or larger color film. Submit negatives used to make submitted photographs, in 3-hole 8-1/2 inch by 11-inch plastic sheets with sleeves for negatives.

3. Digital Photography. Use 2.1 megapixel density or greater for photographs. Scanned photographs must equal or exceed 400 dots

per inch when scanned from 8-inch by 10-inch prints. Submit digital photographic files on computer disks. Format disks for MS-DOS (Microsoft Disk Operating System) filing system and in JPEG (Joint Photographic Experts Group) format.

C. Submittal Quantities and Frequencies.

1. Pre-construction Photographs:
   a. For Stipulated Price Contracts, submit two sets of Pre-construction Photographs, if required, prior to first Application for Payment.
   b. For Unit Price Contracts, submit two sets of Pre-construction Photographs prior to start of construction operations.

2. Progress Photographs:
   a. For Stipulated Price Contracts, submit three sets of Progress Photographs with each Application for Payment at the times established for submittal of Applications for Payment. Monthly Applications for Payment shall be deemed incomplete if not accompanied by the required Progress Photographs. Contractor's failure or election to not submit a monthly Application for Payment shall not affect the requirement for monthly Progress Photographs.
   b. Progress Photographs are not required for Unit Price Contracts unless otherwise specified.

3. Finished Photographs: For Stipulated Price Contracts submit two sets of Finished Photographs, if required, after Date of Substantial Completion and prior to final payment. Each set shall contain one 11-inch by 14-inch matte finish color photographic print from each of the two vantage points pre-approved by the City. Vantage points for Finished Photographs will be approved separately from vantage points approved for Progress Photographs. Finished Photographs are not required for Unit Price Contracts unless otherwise specified.

D. Labeling. Place a label on the back of each photographic print, applied so as to not to show through on the front. Labels shall contain the following information:

1. Name of Project, address of Project and GFS Number.

2. Name and address of Contractor.

3. Date photograph was taken.

4. Location photo was taken from and short description of photo subject.

5. Name and address of professional photographer who took the photograph, if applicable.

E. Hand-deliver or transmit prints in standard photographic mailers marked "Photographs - Do Not Bend".

F. Photographic prints, negatives, photographic files and disks become the property of the City. Do not be publish photographs without written consent by the City.

1.04 QUALITY ASSURANCE

A. Contractor shall be responsible for the quality of and timely execution and submittal of photographs.

B. For Finished Photographs, Contractor shall use a professional photographer, with five years minimum professional experience in the Houston area. Contractor shall submit name, address and credentials of professional photographer for Project Manager's review and approval.

PART 2 PRODUCTS - Not Used

PART 3 EXECUTION

3.01 PRE-CONSTRUCTION PHOTOGRAPHS

A. Prior to commencement of construction operations, photograph the site to include initial construction corridor, detour routes, and staging or storage areas.

1. For Stipulated Price Contracts, unless specified as a requirement in other Sections, these photographs are optional for Contractor, but are highly recommended for areas bounded by other property owners.

2. Pre-construction photographs are required for Unit Price Contracts. For line projects with scheduled construction segments, take Pre-construction Photographs prior to commencement of work on each segment.

B. Prepare Pre-construction Photographs as follows:

1. Show the following information on a non-reflective chalkboard placed within the picture frame:
   a. Job number.
   b. Project Number.
   c. Date and time photographs were taken (Automatic date/time in negative is acceptable).
   d. Baseline station, direction of view (i.e. N, S, NW, etc.) and house number or street address and street name.

2. Pre-construction Photographs shall indicate condition of the following:
   a. Esplanades and boulevards.
   b. Yards (near side and far side of street).
   c. House walks and sidewalks.
   d. Curbs.
   e. Areas between walks and curbs.
   f. Particular features (e.g. yard lights, shrubs, fences, trees).

3. Show date photographs were taken on negatives.

C. Show the location of vantage points and direction of shots on a key plan of the site.

3.02 PROGRESS PHOTOGRAPHS

A. Progress Photographs document monthly advancement of the Work. Select vantage points for each shot so as to best show status of construction and progress since last photograph submittal. Select camera stations that will require little or no movement or adjustment over the duration of construction.

B. Take monthly Progress Photographs at regular intervals to coincide with cutoff dates associated with each Application for Payment.

3.03 FINISHED PHOTOGRAPHS

A. Finished Photographs shall be "staged" and taken by a professional photographer to depict the most flattering images of a finished facility. Two vantage points, from which Finished Photographs will be taken, shall be agreed to in advance by the City. Photographer shall consider lighting, time of day, height of eye, landscaping and placement of vehicles, people and other props in each picture. Filters and post-photography processing may be utilized to achieve a finished product acceptable to the City.

3.04 LOCATION

A. Vantage points, times and conditions for camera stations and photography for Progress and Finished Photographs shall be mutually agreed upon by the City, Contractor and Photographer. Progress Photograph vantage points may be changed by mutual agreement as the Work progresses, at no additional cost to the City.

END OF SECTION

Section 01325

CONSTRUCTION SCHEDULE

PART 1 GENERAL

1.01 GENERAL

A. Provide Construction Schedules for the Work included in this Contract in accordance with requirements in this Section. Create Construction Schedule using Critical Path Method (CPM) computer software capable of mathematical analysis of Precedence Diagramming Method (PDM) plan. Provide printed activity listings and bar charts in formats described in this Section.

B. Combine activity listings and bar charts with narrative report to form Construction Schedule submittal for Project Manager.

1.02 SCHEDULING STAFF

A. Employ or retain services of individual experienced in CPM scheduling for duration of the Contract. Individual shall cooperate with Project Manager and update schedule monthly as required to indicate current status of the Work.

1.03 SUBMITTALS

A. Conform to requirements of Section 01330 - Submittal Procedures.

B. During preconstruction meeting, as described in Section 01312 - Coordination and Meetings, provide sample bar charts and activity listings produced from scheduling software proposed. Scheduling software is subject to review by Project Manager and must meet requirements provided in this Section. Project Manager will provide review of samples within seven days of submittal.

C. Within 21 days of receipt of approval of Contractor's format, or 30 days of Notice to Proceed, whichever is later, submit proposed Construction Schedule for review. Base Construction Schedule submittal on the following:

1. Level of detail and number of activities required in schedule are dependent on project type.
   a. For wastewater projects, categorize work type and area code in schedule.
      1) For wastewater rehabilitation projects, there are six work-type categories. An area code will be assigned for each

Meter Service Area or Basin. Include at least one activity for each unique combination of work type and area code. Normal schedules of wastewater rehabilitation projects contain between 35 and 100 activities, depending on number of basins and work types involved in each basin.

2) For wastewater relief projects (line work), area codes will be assigned geographically.

3) For wastewater plant or facility work, other criteria may apply to assignment of area codes, such as a combination of geographical and craft categories.

b. For projects with multiple types of tasks within scope, indicate types of work separately within schedule.

c. For projects with work at different physical locations or service areas, or different facilities within a site, indicate each location or facility separately within schedule. Show work on each floor of multi-story building as separate tasks.

d. For projects with multiple crafts or significant Subcontractor components, indicate elements separately within schedule. Unless permitted by Project Manager, tasks shall consist of work covered by only one division of Project Manual.

2. Unless permitted by Project Manager, each scheduled task shall be same as Schedule of Values line item, and vice versa.

3. For projects with Major Unit Price Work, indicate Shop Drawing submittal and review, purchase, delivery, and Installation dates on Project schedule. Include activities for testing, adjustment, and delivering O&M manuals.

4. No task except the acquisition of Major Unit Price Work shall represent more than one percent of Original Contract Price for facility projects and three percent of Original Contract Price for other projects. Duration of tasks may not exceed 40 calendar days.

5. For projects where operating facilities are involved, identify each period of work that will impact any process or operation in the schedule and that must be agreed to by Project Manager and facility operator prior to starting work in the area.

D. Construction Schedule submittals shall include:

1. printed bar charts that meet criteria outlined in this Section and are produced by Contractor's approved scheduling software;

2. activity listings that meet criteria outlined in this Section and are produced by Contractor's approved scheduling software; and

3. a predecessor/successor listing sorted by Activity ID that meets criteria outlined in this Section and is produced by Contractor's scheduling software.

4. A logic network diagram is required with the first Construction Schedule submittal for facilities projects.

5. Prepare and submit graphic or tabular display of estimated monthly billings (i.e. a cash flow curve for the Work) with the first schedule submittal. This information is not required in monthly updates, unless significant changes in work require re-submittal of schedule for review. Display shall allocate units indicated in bid schedule or Schedule of Values to Construction Schedule activities. Weighted allocations are acceptable, where appropriate. Dollar value associated with each allocated unit will be spread across the duration of that activity on a monthly basis. Total for each month and cumulative total will be indicated. These monthly forecasts are only for Project Manager's planning purposes. Monthly payments for actual work completed will be made in accordance with Document 00700 - General Conditions.

6. Narrative Report that provides the information outlined in this Section.

E. No payment will be made until Project Manager approves Construction Schedule and billing forecast.

F. If Contractor desires to make changes in its method of operating and scheduling, after Project Manager has reviewed original schedule, notify Project Manager in writing, stating reasons for changes. When Project Manager considers these changes to be significant, Contractor may be required to revise and resubmit for review all or affected portion of Contractor's Construction Schedule to show effect on the Work.

G. Upon written request from Project Manager, revise and submit for review all or any part of Construction Schedule submittal to reflect changed conditions in the Work or deviations made from original schedule.

H. Updated Construction Schedule with actual start and actual finish dates, percent complete, and remaining duration of each activity shall be submitted monthly. Data date used in updating monthly Construction Schedule shall be the same date as used in monthly Payment Application. Monthly update of Construction Schedule is required for monthly Payment Application to be processed for payment.

1.04 SCHEDULING COMPUTER SOFTWARE REQUIREMENTS

A. Contractor's scheduling software shall be capable of creating bar charts and activity listings, which can be sorted by various fields (i.e. Activity ID, Early Start, Total Float, Area Code, Specification Section number, and Subcontractor). Use software capable of producing logic network diagram.

B. Use scheduling software capable of producing activity listings and bar charts with the following information for each activity in the schedule:

1. Activity ID
2. Activity Description
3. Estimated (Original) Duration
4. Remaining Duration
5. Actual Duration
6. Early Start Date
7. Late Start Date
8. Early Finish Date
9. Late Finish Date
10. Free Float
11. Total Float
12. Activity Codes (such as Area Code, Work Type, Specification Section, Subcontractor)

C. Use scheduling software capable of printing calendars using mathematical analysis of schedule, indicating standard workdays of week and scheduled holidays.

D. Use scheduling software capable of printing activity listing that indicates predecessors and successors, lag factors and lag relationships used in creating logic of the schedule.

E. Use scheduling software to provide monthly time in Bar Chart format and scale with 12-month scale not to exceed one page width. Bar charts may be

printed or plotted on 8-1/2 by 11-inch, 8-1/2 by 14-inch or 11 by 17-inch sheet sizes. Over-size plots are not acceptable.

1.05 NARRATIVE SCHEDULE REPORT

A. Narrative schedule report shall list activities started this month, activities completed this month, activities continued this month, activities scheduled to start or complete next month, problems encountered this month, and actions taken to solve these problems.

B. Narrative schedule report shall describe changes made to Construction Schedule logic (i.e. changes in predecessors and lags), activities added to schedule, activities deleted from schedule, any other changes made to the schedule other than addition of actual start dates and actual finish dates and changes of data date and remaining durations for re-calculation of mathematical analysis.

PART 2 P R O D U C T S - Not Used

PART 3 E X E C U T I O N - Not Used

END OF SECTION

Section 01330

SUBMITTAL PROCEDURES

PART 1 GENERAL

1.01 SECTION INCLUDES

A. Submittal procedures for:

1. Schedule of Values
2. Construction Schedules and Cash Flow Curve (billing forecast).
3. Shop Drawings, Product Data and Samples
4. Operations and Maintenance (O&M) Data
5. Manufacturer's Certificates
6. Construction Photographs
7. Project Record Documents and monthly certification.
8. Video Tapes
9. Design Mixes

1.02 SUBMITTAL PROCEDURES

A. Scheduling and Handling:

1. Submit Shop Drawings, data and Samples for related components as required by Specifications and Project Manager.
2. Schedule submittals well in advance of need for construction Products. Allow time for delivery of Products after submittal approval.
3. Develop submittal schedule that allows sufficient time for initial review, correction, resubmission and final review of all submittals. Allow a minimum of 30 days for initial review. Project Manager will review and return submittals to Contractor as expeditiously as possible but time required for review will vary depending on complexity and quantity of data submitted.

4. Project Manager's review of submittals covers only general conformity to Drawings, Specifications and dimensions that affect layout. Contractor is responsible for quantity determination. No quantities will be verified by Project Manager. Contractor is responsible for errors, omissions or deviations from Contract requirements; review of submittals does not relieve Contractor from the obligation to furnish required items in accordance with Drawings and Specifications.

5. Submit five copies of documents unless otherwise specified.

6. Revise and resubmit submittals as required. Identify all changes made since previous submittal.

7. Assume risk for fabricated Products delivered prior to approval. Do not incorporate Products into the Work, or include payment for Products in periodic progress payments, until approved by Project Manager.

B. Transmittal Form and Numbering:

1. Transmit each submittal to Project Manager with Transmittal letter which includes:
   a. Date and submittal number
   b. Project title and number
   c. Names of Contractor, Subcontractor, Supplier and manufacturer
   d. Identification of Product being supplied
   e. Location of where Product is to be Installed
   f. Applicable Specification section number

2. Identify deviations from Contract documents clouding submittal drawings. Itemize and detail on separate 8-1/2 by 11-inch sheets entitled "DEVIATIONS FOR _____." When no deviations exist, submit a sheet stating no deviations exist.

3. Have design deviations signed and sealed by an appropriate design professional, registered in the State of Texas.

4. Sequentially number transmittal letters beginning with number one. Use original number for resubmittals with an alphabetic suffix (i.e., 2A for the first resubmittal of submittal 2, or 15C for third resubmittal of submittal 15, etc.). Show only one type of work or Product on each submittal. Mixed submittals will not be accepted.

C. Contractor's Stamp:

1. Apply Contractor's Stamp certifying that the items have been reviewed in detail by Contractor and that they comply with Contract requirements, except as noted by requested variances.

2. As a minimum, Contractor's Stamp shall include:
   a. Contractor's name
   b. Job number
   c. Submittal number
   d. Certification statement Contractor has reviewed submittal and it is in compliance with the Contract
   e. Signature line for Contractor

D. Submittals will be returned with one of the following Responses:

1. "ACKNOWLEDGE RECEIPT" when no response and resubmittal is required.

2. "NO EXCEPTION" when sufficient information has supplied to determine that item described is accepted and that no resubmittal is required.

3. "EXCEPTIONS AS NOTED" when sufficient information has been supplied to determine that item will be acceptable subject to changes, or exceptions, which will be clearly stated. When exceptions require additional changes, the changes must be submitted for approval. Resubmittal is not required when exceptions require no further changes.

4. "REJECTED-RESUBMIT" when submittal does not contain sufficient information, or when information provided does not meet Contract requirements. Additional data or details requested by Project Manager must be submitted to obtain approval.

1.03 MANUFACTURER'S CERTIFICATES

A. When required by Specification sections, submit manufacturers' certificate of compliance for review by Project Manager.

B. Place Contractor's Stamp on front of certification.

C. Submit supporting reference data, affidavits, and certifications as appropriate.

D. Product certificates may be recent or from previous test results, but must be acceptable to Project Manager.

1.04 DESIGN MIXES

A. When required by Specification sections, submit design mixes for review.

B. Place Contractor's Stamp, as specified in this section, on the front of each design mix.

C. Mark each mix to identify proportions, gradations, and additives for each class and type of mix submitted. Include applicable test results from samples for each mix. Perform tests and certifications within 12 months of the date of the submittal.

D. Maintain copies of approved mixes at mixing plant.

1.05 CHANGES TO CONTRACT

A. Changes to Contract may be initiated by completing a Request for Information form. Project Manager will provide a response to Contractor by completing the form and returning it to Contractor.

1. If Contractor agrees that the response will result in no increase in cost or time, a Minor Change in the Work will be issued by City Engineer.

2. If Contractor and Project Manager agree that an increase in time or cost is warranted, Project Manager will forward the Request for Proposal for negotiation of a Change Order.

PART 2 P R O D U C T S - Not Used

PART 3 E X E C U T I O N - Not Used

END OF SECTION

Section 01340

SHOP DRAWINGS, PRODUCT DATA, AND SAMPLES

PART 1 GENERAL

1.01 SECTION INCLUDES

A. Methods, schedules, and processes to be followed for Shop Drawings, Product Data and Sample submittals.

1.02 REQUIREMENT

A. Submit Shop Drawings, Product Data and Samples as required by Document 00700 - General Conditions and Specification sections, using procedures specified in Section 01330 - Submittal Procedures and the requirements of this Section.

B. Shop Drawings, Product Data and Samples are not considered Contract documents.

1.03 SHOP DRAWING/SUBMITTAL SCHEDULE

A. Submit a separate Shop Drawing submittal schedule at same time the Construction Schedule is submitted. List Products for which Shop Drawings and other submittals are required in the order that they appear in Specifications. Include Product Data and Sample submittals in the schedule. Payment Applications or Certificates for Payment will not be processed until Project Manager has approved the Shop Drawing submittal schedule.

1.04 SHOP DRAWINGS

A. Submit a minimum of seven sets of Shop Drawings and Product Data in a form and quality suitable for microfilming. Review and sign Shop Drawings indicating compliance with the Contract.

B. Place Contractor's Stamp on each drawing as described in Section 01330 - Submittal Procedures.

C. Show the following accurately and distinctly:

1. Field and erection dimensions;

2. Arrangement and section views;

3. Relation to adjacent materials or structure, including complete information for making connections between the Work and work under other contracts;

4. Types of Products and finishes;

5. Parts list and descriptions;

6. Assembly drawings of equipment components and accessories showing respective positions and relationships to the complete equipment package;

7. Identify details by referencing drawing sheet and detail numbers, schedule or room numbers as shown on the Contract drawings, where necessary for clarity.

D. Scale drawings to provide a true representation of the specific equipment or item Furnished.

E. Coordinate and submit components, necessary for Project Manager to adequately review submittal, as a complete package. Reproduction of the Drawings for use in Shop Drawings is not allowed.

F. For major changes to original documents, submit Computer-Aided Design (CAD) drawings on a media acceptable to Project Manager.

1.05 PRODUCT DATA

A. Submit Product Data for review as required in Specifications.

B. Place Contractor's stamp, on each data item submitted, as described in Section 01330 - Submittal Procedures.

C. Mark each copy to identify applicable Products, models, and options to be used in the Work. Where required by Specifications, supplement manufacturers' standard data to provide information unique to the Work.

D. Give manufacturers, trade name, model or catalog designation and applicable reference standard for Products specified only by reference standards.

E. Pre-approved and Pre-qualified Products.

1. For "pre-approved", "pre-qualified" and "approved" Products named in the City standard products list, provide an appropriate list designation,

as described in Section 01630 - Product Substitution Procedures, within 30 days after Notice to Proceed.

2. For Products proposed as alternates to "approved" products, provide information required to demonstrate that the proposed Products meet the level of quality and performance criteria of the "approved" product.

1.06 SAMPLES

A. Submit Samples for review as required by Specifications. Have Samples reviewed and signed by a Registered Professional.

B. Place Contractor's stamp on each Sample or firmly attach a sheet of paper with Contractor's stamp, as described in Section 01330 - Submittal Procedures.

C. Submit the number of Samples specified in Specifications; Project Manager will retain one.

D. Reviewed Samples that may be used in the Work are identified in Specifications.

PART 2 P R O D U C T S - Not Used

PART 3 E X E C U T I O N - Not Used

END OF SECTION

SECTION 01351

ENVIRONMENTAL SAFETY AND WORKER PROTECTION

PART 1 GENERAL

1.01 SECTION INCLUDES

Environmental Safety and Worker Protection including monitoring emissions and exposure to workers and providing an appropriate response. The role of the Certified Industrial Hygienist (CIH) is also defined.

1.02 MEASUREMENT AND PAYMENT

No separate measurement and payment for work performed under this Section. The Contractor shall include the cost for this work in the contract bid price for work of which this is a component part.

1.03 REFERENCES

The following is a list of applicable requirements to this project. It is not intended to be a complete listing of all laws and regulations to which the Contractor must comply.

A. Code of Federal Regulations

1. 29 CFR 1910, "Occupational Safety and Health Standards".

   a. 29 CFR 1910.146 "Permit-required confined spaces".

2. 29 CFR 1926, "Safety and Health Regulations for Construction" (Construction Industry Standards).

   a. 29 CFR 1926.33 "Access to Employee Exposure and Medical Records".

   b. 29 CFR 1926.51, "Sanitation Standard".

   c. 29 CFR 1926.59, "Hazard Communication".

   d. 29 CFR 1926.62, "Lead".

   e. 29 CFR 1926.103 "Respiratory Protection".

3. 40 CFR 50, "National Primary and Secondary Ambient Air Quality

Standards"

a. 40 CFR 50 Appendix B, "Reference Method for the Determination of Suspended Particulate Matter in the Atmosphere (High Volume Method)".

b. 40 CFR 50 Appendix G, "Reference Method for the Determination of Lead in Suspended Particulate Matter Collected from Ambient Air".

4. 40 CFR 58, "Ambient Air Quality Surveillance".

5. 40 CFR 60 Appendix A, "Visual Determination of Fugitive Emissions from Material Sources and Smoke Emissions from Fires".

6. 40 CFR 117, "Determination of Reportable Quantities for Hazardous Substances".

7. 40 CFR 122, "Administered Permit Program: The National Pollutant Discharge Elimination System".

B. National Institute for Occupational Health and Safety

NIOSH Method 7082, "Lead" (or equivalent).

C. American Society for Testing and Materials

ASTM D3335, "Test Method for Low Concentrations for Lead, Cadmium, and Cobalt in Paint by Atomic Absorption Spectroscopy."

D. EPA (Environmental Protection Agency) Publications

1. SW-846, "Test Methods for Evaluating Solid Waste - Physical/Chemical Methods".

2. EPA Method 3050, "Acid Digestion of Sediments, Sludges, and Soils".

E. SSPC Guide 6, "Guide for Containing Debris Generated During Paint Removal Operations".

F. SSPC Guide 7, "Guide for the Disposal of Lead Contaminated Surface Preparation Debris".

G. SSPC Publication 91-18, "Industrial Lead Paint Removal Handbook".

H. Texas Commission on Environmental Quality

1. Texas Administrative Code (TAC) 30, Chapter 101, "General Rules".

2. Texas Administrative Code (TAC) 30, Chapter 111, "Control of Air Pollution from Visible Emissions and Particulate Matter".

3. Texas Administrative Code (TAC) 30, Chapter 290, "Water Hygiene".

4. Texas Administrative Code (TAC) 30, Chapter 307, "Surface Water Quality Standards".

5. Texas Administrative Code (TAC) 30, Chapter 309, "Effluent Limitations".

6. Texas Administrative Code (TAC) 30, Chapter 335, "Industrial Solid Waste and Municipal Hazardous Waste".

1.04 SUBMITTALS

A. Submittals shall conform to requirements of Section 01330 – Submittal Procedures.

B. Submittals shall conform to appropriate codes for regulatory requirements.

1.05 DEFINITION

A. Acceptance Criteria: Minimum standards for the content of programs, plans, procedures, and designs required by this specification for the performance of this project. Acceptance criteria will be the basis for judging the responsiveness of Contractors' programs and will also be used as a basis for suspending work, if necessary.

B. Action Level: Employee exposure, without regard to the use of respirators, to an airborne concentration of lead of 30 micrograms per cubic meter of air (µg/m3) calculated as an eight hour time-weighted average (TWA).

C. CERCLA: Comprehensive Environmental Response, Compensation, and Liability Act; commonly called Superfund. Federal laws addressing the clean up of hazardous waste sites. Amended in 1986 by Superfund Amendments and Re-Authorization Act (SARA). EPA implementing regulations are contained in 40 CFR 300-373.

D. Competent Person: One who is capable of identifying existing and predictable lead hazards in the surroundings or working conditions and who has authorization to take prompt corrective measures to eliminate them.

E. Containment System: An enclosure built around lead paint removal areas designed to contain lead paint debris and prevent emissions to the environment.

F. Dust Collection: Mechanical ventilation system designed specifically for the containment, capture, and removal of airborne particulate from the containment. Dust collection systems shall include ductwork, plenums and/or hoppers, and dust collector(s) for the removal of leaded paint dust from the air stream prior to discharging to the atmosphere.

G. Emission: A release of material to the air, water, or ground.

H. Entry/Exit Airlock: An isolated enclosure located at the entrance of the containment in which the workers remove contaminated dust and debris from their work clothes.

I. EPA: The US. Environmental Protection Agency. Regulations are contained in Title 40 of the Code of Federal Regulations (40 CFR).

J. Hazardous Waste (lead paint debris): Waste that is classified as hazardous due to its concentrations of regulated hazardous substances. Paint debris is classified as hazardous waste if, after testing by the Toxicity Characteristic Leaching Procedure (TCLP), the leachate contains any of the 8 metals or other substances in concentrations at or above limits established in 40 CFR 261.

K. HEPA: A high efficiency particulate filter (HEPA) that is 99.97% efficient against particles of 0.3 microns in size or larger.

L. Lead Containing Dust and Debris: Dust and debris generated during the project which contains lead in any amount, including but not limited to pulverized paint, spent abrasive, filters (wet and dry), and containment materials upon which lead is still present.

M. NIOSH: National Institute of Occupational Safety and Health.

N. OSHA: Occupational Safety and Health Administration. Standards are contained in Title 29 of the Code of Federal Regulations, Parts 1910 and 1926 (29 CFR 1910 and 29 CFR 1926).

O. Owner: The City of Houston

P. PEL: Permissible Exposure Limit. An employee exposure, without regard to the use of respirators, to an airborne concentration of lead of 50 µg/m3 over an 8 hour TWA.

Q. POTW: Publicly Owned Treatment Works

R. RCRA: Resource Conservation and Recovery Act. Federal law pertaining to hazardous waste management. EPA implementing regulations are contained in 40 CFR 240-280.

S. Regulated Area: Area established by the Contractor to demarcate the zone(s) beyond which airborne concentrations of lead do not exceed the Action Level.

T. SSPC: Society for Protective Coatings. An independent, non-profit organization of engineers, technical specialists, and Contractors whose goal is research and development of new coatings and methods for removal, application, and disposal of existing coatings on industrial structures.

U. Tarpaulins: Flexible fabric, vinyl, plastic or canvas cover sheets, impenetrable to dust, wind, and water, used to enclose the cable and/or scaffold support system comprising the containment enclosure.

V. TCLP: Toxicity Characteristic Leaching Procedure. Laboratory tests conducted on wastes that determine the amount of hazardous materials that leach out into a test solution. The test is intended to simulate the properties of water as it leaches through a solid waste landfill. TCLP testing is defined in 40 CFR 261, Appendix II.

W. TSP: Total Suspended Particulate

PART 2 PRODUCTS

2.01 MATERIAL AND EQUIPMENT

A. The Contractor is to supply materials and equipment to insure the safety and protection of workers and the environment in accordance with these specifications.

PART 3 EXECUTION

3.01 ENVIRONMENTAL PROTECTION AND MONITORING

NOTE: Section 09971 "Painting and Protective Coatings", 2.04 "Containment System" specifically identifies containment system requirements.

A. Protection of Ambient Air: Visible emissions are to be controlled to meet, as a minimum, TAC 30 Chapter 111," Control of Air Pollution from Visible Emissions and Particulate Matter" requirements and SSPC-Guide 6I (CON), Level 1 Emissions. Air monitoring and analysis may be performed by the City during abrasive blast cleaning operations. Such monitoring will be in accordance with 40

CFR 50, Appendix B, "Reference Method for the Determination of Suspended Particulate Matter in the Atmosphere" and/or 40 CFR 50, Appendix G, "Reference Method for the Determination of Lead in Suspended Particulate Matter Collected from Ambient Air". The limits for down wind pollutant concentrations allowed during blasting operations are as follows:

PM-10: 450 micrograms/cubic meter/ 8 hr.. (40 CFR 50.6)

Lead (Pb): 13.5 micrograms/cubic meter/8 hr.. (40 CFR 50.12)

Visible emissions and/or monitored emissions for PM-10 and TSP lead in excess of the above levels shall be cause for shut down of the project until corrections to control/ containment system or paint removal/ surface preparation operations are made to comply with these requirements.

B. Protection of Surface and Storm Water: The Contractor shall take all necessary precautions to ensure lead contaminants do not enter surface waters or storm water drainage systems.

1. The Contractor shall protect the area around ditches and drainage inlets. Daily verification of proper protection to minimize the potential contaminants reaching the drainage system shall be performed.

2. The Contractor shall collect all potentially contaminated process waters for testing and, as appropriate, treatment. Process water from pressure washing, wet abrasive blast cleaning or hygiene facilities shall not be discharged to drainage systems or surface waters.

3. The Contractor may remove lead or other heavy metals from such waters through filtration, ion exchange or other approved means. Following treatment, water samples must be tested prior to disposal. Discharge to sanitary sewer lines requires authorization, in writing, from a POTW.

C. Protection of Soil and Grounds: The Contractor shall protect the soil around the structure to ensure that the soil does not become contaminated. Where lead is present in the coatings to be removed, as indicated in Section 02136 "Waste Material Handling and Disposal", the Contractor shall provide for the sampling and analysis of soil samples for total lead content.

1. Sampling and analysis shall be performed prior to commencement of paint removal operations to establish a background "base level". Soil samples shall be taken 3 feet from the base of the tank(s), at a distance of 6-10 feet beyond the proposed containment structure and at the property line.

2. Samples from each area shall be taken in a minimum of four directions, at

circular increments of 90^0, one of which shall include the direction of prevailing wind. Samples shall also be obtained, at the direction of the engineer, at the closest points of public access (i.e. housing, park, school).

3. The soil sampling procedure shall be as outlined in SSPC Guide 6 Section 5.5.5. Each sampling point shall be sufficiently identified on a site map to allow return to the exact location upon project completion.

4. Each sample shall be split in two portions, one for immediate analysis and the other sealed, preserved and furnished to the Engineer. The samples shall be analyzed in accordance with EPA Method 3050, "Acid Digestion of Sediments, Sludges and Soils", and shall be performed by a qualified laboratory approved by the Engineer.

5. Samples shall be obtained at the completion of work (post-construction samples) from all locations from which pre-construction samples were obtained. Samples shall be collected, handled and tested in the same manner as described above.

6. Upon completion of the work, soils found to be contaminated with lead in greater quantity than found in the background "base level", established at the start of the work, shall be removed by the Contractor to the depth necessary to achieve a lead content equivalent to, or below, the pre-construction back ground levels. Disposal shall be in accordance with applicable regulations.

7. The Contractor shall replace in-kind (i.e., topsoil, structural fill, etc.) with an equivalent amount of non-contaminated soil, compact in place and grade to pre-existing conditions. The Contractor shall also replace in-kind any surface improvements, such as grass, shrubs, etc. that were damaged or destroyed by the work. The soil removal, replacement and related work is to be performed by the Contractor at no additional cost to the Owner.

3.02 WORKER PROTECTION

A. The Contractor shall develop a written Compliance Program to establish and implement practices and procedures for assuring that no employee is exposed to lead at concentrations greater than 50 micrograms per cubic meter of air ($\mu g/m^3$), the OSHA permissible exposure limit (PEL). This program is in addition to other OSHA hazard communication and safety and health requirements of the project, and shall be revised and updated at least every six months.

1. The program shall establish methods for complying with this specification and the OSHA Construction Industry Lead Standard, 29 CFR 1926.62(e)(2)(ii). The Federal regulation is referred to as the "Lead

Standard" for the purpose of this specification.

2. The program shall apply to all Contractor employees associated with lead on the project, and to subcontractors working under the direct control of the Contractor who are associated with lead on the project.

3. The program shall assign the specific responsibility for implementation and enforcement of the program to the Contractors' company management. The Contractor's Competent Person(s) shall be identified, by name, and qualifications submitted. The Competent Person shall be on-site during any operations which involve the removal, handling or disturbing of lead containing materials.

4. The program shall contain a description of each activity in which lead is emitted (e.g. equipment used, material involved, controls in place, crew size, employee job responsibilities, operating procedures and maintenance practices).

5. The program shall contain a report of the technology considered in meeting the PEL and air monitoring data which documents the source of lead emissions.

6. The program shall contain a work practice program which includes items required in the lead standard such as protective clothing and equipment, housekeeping, and hygiene facilities and practices.

B. Exposure Monitoring: The Contractor shall be responsible for conducting and reporting worker exposure assessments in accordance with 29 CFR 1926.62.

1. Representative personal air samples shall be collected at the beginning of the lead removal work to determine employee lead exposures. Tasks involving potential lead exposure include, but are not limited to, paint removal operations, clean-up, and debris handling operations. Full shift (at least 7 hours) air samples shall be collected for each job classification in the exposure area. The range of exposures for lead removal and cleanup activities shall be determined.

2. During the initial monitoring, workers performing the following activities (or equivalent) shall be protected to the anticipated exposure levels which are dictated by the lead standard:

   a. 500 $\mu g/m^3$: Manual demolition of structures containing lead-containing coatings or paint (e.g., dry wall), manual scraping, manual sanding, heat gun applications, power tool cleaning with dust collection systems, and spray painting with lead paint.

b. 2,500 $\mu g/m^3$: Using lead-containing mortar, lead burning, or conducting the following activities where lead-containing coatings or paint are present: rivet busting, power tool cleaning without dust collection systems, clean-up activities where dry expendable abrasives are used, and the movement and removal of abrasive blasting enclosures.

c. More than 2,500 $\mu g/m^3$: Activities involving lead containing coatings or paint on structures disturbed by abrasive blasting, welding, cutting, and torch burning.

3. Protection requires compliance with the necessary respiratory protection, personal protective clothing and equipment, change areas and washing facilities, blood lead and zinc protoporphyrin monitoring, and employee training. The protection measures shall be modified, as necessary, after the exposure results are received.

4. Where initial monitoring indicates that lead exposures are below the Action Level, and where work activities and conditions remain the same as at the time of initial sampling, additional monitoring need not be repeated for that work activity.

5. Where the initial monitoring of a given work activity indicates that lead exposures are at or above the Action Level, additional exposure monitoring shall be conducted monthly. The monthly monitoring is more frequent than frequencies established in the lead standard which are at least every 6 months if above the Action Level, but below the PEL, or every 3 months if above the PEL.

6. All air samples shall be collected and analyzed according to NIOSH Method 7082, or equivalent. All samples shall be analyzed by laboratories accredited by the American Industrial Hygiene Association for metals analysis.

7. All exposed employees shall be notified in writing of the monitoring results within five (5) days after receiving the results.

8. The Action Level for airborne lead exposure is 30 $\mu g/m^3$, as an 8-hour time weighted average (TWA) concentration, without regard to the use of respirators. Whenever workers' airborne lead exposures exceed the Action Level, the Contractor shall implement the following:

   a. Periodic Exposure Monitoring
   b. Employee Information and Training

c. Employee Medical Surveillance and Medical Removal Protection
d. Housekeeping
e. Record keeping
f. Signs and Regulated Areas

9. The Permissible Exposure Limit (PEL) for airborne lead exposure is 50 $\mu g/m^3$, as an 8-hour TWA concentration. When the work area contains airborne lead levels above the PEL the Contractor shall implement the following in addition to those items listed in 3.02.B.8 of this section:

a. Compliance Program
b. Respiratory Protection
c. Protective Clothing and Equipment
d. Hygiene Facilities and Practices

C. Respiratory Protection: After feasible engineering controls and work practices have been implemented, respiratory protection shall be used to maintain employees' lead exposures below the PEL.

1. Respirators shall be worn by all employees, other Contractors, inspectors, or observers who enter regulated areas.

2. The Contractor shall develop a written Respiratory Protection Program in compliance with 29 CFR 1910.134, paragraphs (b), (d), (e), and (f), and the lead standard. The program shall address the selection, use, maintenance, and inspection of respirators, and qualifications for respirator users.

D. Protective Clothing and Equipment: The Contractor shall provide protective clothing and equipment and ensure they are worn by all employees whose lead exposures exceed the PEL, or who enter regulated areas.

1. Protective clothing shall include washable and/or disposable full body coveralls, gloves, foot coverings, and hoods. Other protective equipment shall include face shields, hard hats, eye protection, and hearing protection as appropriate.

2. Disposable protective clothing shall be used for no more than one work day. Such clothing may have to be disposed of as hazardous waste.

3. Reusable protective equipment shall be cleaned or replaced weekly if exposure levels are less than 200 $\mu g/m^3$, or daily if the exposure levels are greater than or equal to 200 $\mu g/m^3$.

4. Clothing shall not be removed or "cleaned" by any means which could reintroduce the lead dust into the ambient air. This includes brushing,

shaking, and blowing. Vacuums equipped with HEPA filters shall be used for this purpose.

5. Reusable coveralls shall be collected at the end of each work day in closed containers. The containers shall be labeled in accordance with the requirements of 29 CFR 1926.62(g)(2)(vii). Contaminated clothing shall be cleaned in accordance with all applicable Federal, State, or local regulations pertaining to lead-contaminated laundry and water discharge. Laundries shall be informed that the clothing contains lead. If the clothing is washed on site, the discharge water shall be filtered, containerized, and arrangements made with the local POTW or other approved means of proper disposal.

6. Protective clothing and equipment shall be removed in the contaminated section of the change area and shall not be worn into any clean areas.

7. The Contractor shall provide the necessary clothing and equipment for use by the Owner and its designated representatives.

E. Housekeeping: Accumulations of lead-containing dust and debris generated by work activities shall be removed and cleaned daily.

1. All persons doing the cleanup shall be trained in performing lead activities, respirator qualified, and participate in the medical surveillance program. Respirators and protective clothing shall be worn by all persons doing the cleanup.

2. Compressed air may be used for housekeeping if used within containment and in conjunction with a ventilation system designed to capture the dust. Otherwise, HEPA-filtered vacuum cleaners shall be employed.

3. All lead-containing dust and debris shall be collected in sealed containers. The waste shall be tested to determine whether it will be disposed of as hazardous waste.

F. Personal Hygiene Facilities and Practices

1. Clean change areas shall be provided when employees' lead exposures exceed the PEL. The change areas shall be equipped with storage facilities for street clothing and a separate area for the removal and storage of lead-contaminated clothing and equipment. They shall be designed and used so that contamination of street clothing does not occur. Employees shall not leave the project site wearing any clothing worn while performing lead activities. Airborne lead exposures in the change area shall be maintained below the Action Level.

2. Shower facilities shall be provided whenever employees' lead exposures exceed the PEL. Shower facilities shall comply with OSHA Sanitation Standard, 29 CFR 1929.51. All employees whose lead exposures exceed the PEL shall shower at the end of each work shift or before leaving the project area. The shower facilities shall be made available for use by the Owner and its representatives, such as inspectors or observers.

3. Arrangements shall be made with the local POTW for the proper disposal of the shower and wash water after filtration (e.g., through a three stage 100, 50, and 5 micron filtering system), ion exchange, or other approved treatment technology.

4. Clean lunch areas shall be provided for all employees whose lead exposures exceed the PEL. Employees shall remove or clean (by vacuuming) their protective clothing and wash their hands and face before entering the lunch area. Lead exposures in the lunch area shall be maintained as free as practicable from lead contamination.

5. An adequate number of clean lavatory and hand washing facilities shall be provided. These shall comply with the OSHA Sanitation Standard, 29 CFR 1929.51.

6. Eating, drinking, smoking, chewing of food or tobacco products, or the application of cosmetics shall not be permitted in any areas where the lead exposures exceed the PEL. Thorough washing of hands and face is required prior to undertaking any of these activities.

G. Medical Surveillance and Medical Removal Protection

1. All employees who are exposed to lead above the Action Level in a single day during this project shall be provided with initial and periodic medical examinations and blood lead tests as required by the lead standard. A final blood lead test shall be provided for each worker upon completion of the project, or at any time a worker's employment at the project ceases.

2. When blood lead levels over 50 µg/dl are encountered, the Contractor shall provide for the temporary removal of employees from lead exposure above the Action Level. The required medical surveillance and periodic blood lead tests shall be provided in strict accordance with the lead standard throughout the removal.

3. Employees who will be required to wear a respirator or who request one shall be provided with a respirator and the necessary medical examinations to determine their ability to wear a respirator.

4. All examinations shall be provided by the Contractor and shall be performed by or under the direct supervision of a licensed physician.

H. Employee Information and Training

1. The Contractor shall provide lead training for all employees who are exposed to lead above the Action Level for this project.

2. The content of lead training shall include, as a minimum, those items listed in the lead standard.

3. Training shall also include hazard communication in accordance with 29 CFR 1926.59.

4. The Contractor shall notify other employers at the project site of the nature of the lead exposure work, the need to remain out of exposure areas, the warning sign and labeling system in effect, and the potential need for them to take measures to protect their employees.

I. Signs and Regulated Areas

1. The Contractor shall establish a regulated area surrounding activities where lead exposures exceed the Action Level. This includes locations where lead-containing debris is handled or transferred to storage containers.

2. The regulated area shall be demarcated by ropes, tape, walls, or containment's with caution signs posted at all accessible sides. Signs shall contain the legend:

WARNING
LEAD WORK AREA
POISON
NO SMOKING OR EATING

3. The Contractor shall control access of persons into regulated areas. Access shall be limited to individuals with proper training and personal protective equipment, and medical surveillance testing.

4. All persons entering regulated areas shall wear protective clothing and respirators.

5. Eating, drinking, smoking, and chewing of food or tobacco products shall be prohibited in regulated areas and in any area where lead exposures exceed the Action Level.

J. Record keeping: All records relating to training, medical examinations, blood lead monitoring, and exposure monitoring shall be maintained by the Contractor as required by the lead standard. All records shall be available for review by the Owner or its representative upon request.

3.03 CERTIFIED INDUSTRIAL HYGIENIST (CIH)

A. The Contractor shall provide for the services of a Certified Industrial Hygienist (CIH) who must be certified by the American Board of Industrial Hygiene in comprehensive practice.

B. Duties of the CIH shall be as follows:

1. Conduct and/or verify training for contractor employees in accordance with 29 CFR 1926.62 (l).

2. Review and approve Contractor's Written Compliance Plan for conformance to 29 CFR 1926.62(e)(2)(ii) and this Specification.

3. Monitor and evaluate work weekly to assure conformance with the approved plan and that hazardous exposure is adequately controlled in accordance with worker safety and health requirements of these specifications

4. Provide monthly reports of work compliance with control requirements in regards to working in a lead environment.

C. Activities of the CIH shall include:

1. Meet with City to discuss details of Contractor's Written Compliance Plan for lead paint removal.

2. Ensure worker and area air monitoring, testing and reporting are conducted by or under the direction of the CIH.

3. Furnish a detailed worker and area air monitoring schedule coordinated with Contractor's proposed production schedule.

4. Directing, monitoring and inspecting lead paint removal work to ensure that the requirements of the Contract have been satisfied during the entire lead paint removal operation.

5. Report results of air monitoring samples to the Engineer, signed by the CIH within 48 hours after the air samples are taken.

6. The CIH shall review sampling data, collected on a day when lead paint

removal operations occur, to determine if conditions require any change in work methods. Removal work shall not continue until approval is given by the CIH.

7. The CIH shall verify in writing and submit monitoring data to verify that:

   a. Air borne lead levels at and beyond the lead control (regulated) area were and remained less than 30 mg/m^3 of air

   b. Contractor conformance to 29 CFR 1926.62 and Item 3.02, above

   c. There were no visible accumulations of lead contaminated paint, dust or debris on the work site. Adjacent areas that may have become contaminated were properly cleaned and inspected.

   d. The CIH shall verify that the work area and contractor's equipment have been adequately cleaned of lead contamination prior to demobilization from the work site.

3.04 DEMOBILIZATION

The Contractor shall not remove the lead control area, boundaries, warning signs, etc. prior to proper removal of all hazardous wastes, debris and materials from the site and the City's receipt and acceptance of the CIH's verification.

END OF SECTION

Section 01410

TPDES REQUIREMENTS

1.01 SECTION INCLUDES

A. Documentation to be prepared and signed by Contractor/Operator before conducting construction operations, in accordance with the Texas Pollutant Discharge Elimination System (TPDES) Construction General Permit Number TXR 150000 issued February 15, 2008 (the Construction General Permit).

B. Implementation, maintenance inspection, and termination of storm water pollution prevention control measures including, but not limited to, erosion and sediment controls, storm water management plans, waste collection and disposal, off-site vehicle tracking, and other appropriate practices shown on the Drawings or specified elsewhere in the Contract.

C. Review of the Storm Water Pollution Prevention Plan (SWP3) implementation in a meeting with Project Manager prior to start of construction.

1.02 DEFINITIONS

A. Commencement of Construction Activities: The exposure of soil resulting from activities such as clearing, grading, and excavation activities, as well as other construction related activities (e.g., stock piling of fill material, demolition).

B. Large Construction Activity: Project that:o

1. disturbs five acres or more, or

2. disturbs less than five acres but is part of a larger common plan of development that will disturb five acres or more of land.

C. Small Construction Activity: Project that:

1. disturbs one or more acres but less than five acres, or

2. disturbs less than one acre but is part of a larger common plan of development that will ultimately disturb one or more acres but less than five acres.

D. TPDES Operator:

Operator - The person or persons associated with a large or small construction activity that is either a primary or secondary as defined below:

Primary Operator – the person or persons associated with a large or small construction activity that meets either of the following two criteria:

(a) the persons have operational control over construction plans and specifications, including the ability to make modifications to those plans and specifications; or

(b) the person or persons have day-to-day operational control of those activities at a construction site that are necessary to ensure compliance with a storm water pollution prevention plan (SWP3) for the site or other permit conditions (e.g., they are authorized to direct workers at a site to carry out activities required by the SWP3 or comply with other permit conditions).

Secondary Operator – The person whose operational control is limited to the employment of other operators or to the ability to approve or disapprove changes to plans and specifications. A secondary operator is also defined as a primary operators if there are no other operators if there are no other operators at the construction site.

PART 2 P R O D U C T S - Not Used

PART 3 E X E C U T I O N

3.01 SITE SPECIFIC STORM WATER POLLUTION PREVENTION PLAN (SWP3)

A. Prepare a SWP3 following Part III of the Construction General Permit and the Storm Water Management Handbook for Construction Activities issued under City Ordinance Section 47-695(b). If conflicts exist between the Construction General Permit and the handbook, the more stringent requirements will apply.

B. Update or revise the SWP3 as needed during the construction following Part III, Section E of the Construction General Permit.

C. Submit the SWP3 and any updates or revisions to Project Manager for review and address comments prior to commencing, or continuing, construction activities.

3.02 NOTICE OF INTENT For Large Construction Activity

A. Fill out, sign, and date TCEQ Form 20022 (03/05/2008) Notice of Intent (NOI) for Storm Water Discharges Associated with Construction Activity under the TPDES Construction General Permit (TXR 150000), **ATTACHMENT 1** of this Section 01410.

B. Transmit the signed Contractor's copy of TCEQ Form 20022 (03/05/2008), along with a $325.00 check, made out to Texas Commission on Environmental Quality, and the completed Payment Submittal Form to Project Manager.

C. Project Manager will complete a separate TCEQ Form 20022 (03/05/2008) for City's Notice of Intent, and will submit both Notices, along with checks for application fees, to the TCEQ.

D. Submission of the Notice of Intent form by both the City and Contractor to TCEQ if mailing is required a minimum of seven days before Commencement of Construction Activities.

3.03 CONSTRUCTION SITE NOTICE FOR SMALL CONSTRUCTION ACTIVITY

A. Fill out, sign, and date the Construction Site Notice, Attachment 2 to TPDES General Permit TXR 150000, "Construction Site Notice", **ATTACHMENT 2** of this Section 01410.

B. Transmit the signed Construction Site Notice to Project Manager at least seven days prior to Commencement of Construction Activity.

3.04 CERTIFICATION REQUIREMENTS

A. Fill out TPDES Operator's Information form, **ATTACHMENT 3** of this Section 01410, including Contractor's name, address, and telephone number, and the names of persons or firms responsible for maintenance and inspection of erosion and sediment control measures. Use multiple copies as required to document full information.

B. Contractor and Subcontractors shall sign and date the Contractor's / Subcontractor's Certification for TPDES Permitting, **ATTACHMENT 4** of this Section 01410. Include this certification with other Project certification forms.

C. Submit properly completed certification forms to Project Manager for review before beginning construction operations.

D. Conduct inspections in accordance with TCEQ requirements. Ensure persons or firms responsible for maintenance and inspection of erosion and sediment control measures read, fill out, sign, and date the Erosion Control Contractor's Certification for Inspection and Maintenance. Use the City of Houston Storm Water Pollution Prevention Plan, Construction Site Inspection Report, **ATTACHMENT 5** of this Section 01410 to record maintenance inspections and repairs.

3.05 RETENTION OF RECORDS

A. Keep a copy of this document and the SWP3 in a readily accessible location at the construction site from Commencement of Construction Activity until submission of the Notice of Termination (NOT) for Storm Water Discharges Associated with Construction Activity under TPDES Construction General Permit (TXR 150000). Contractors with day-to-day operational control over SWP3 implementation shall have a copy of the SWP3 available at a central location, on-site, for the use of all operators and those identified as having responsibilities under the SWP3. Upon submission of the NOT, submit all required forms and a copy of the SWP3 with all revisions to Project Manager.

3.06 REQUIRED NOTICES

A. Post the following notices from effective date of the SWP3 until date of final site stabilization as defined in the Construction General Permit:

1. Post the TPDES permit number for Large Construction Activity, with a signed TCEQ Construction Site Notice for large or Small Construction Activity. Signed copies of the City's and Contractor's NOI must also be posted.

2. Post notices near the main entrance of the construction site in a prominent place where it is safely and readily available for viewing by General Public, Local, State, and Federal Authorities. Post name and telephone number of Contractor's local contact person, brief project description and location of the SWP3.

   a. If posting near a main entrance is not feasible due to safety concerns, coordinate posting of notice with Project Manager to conform to requirements of the Construction General Permit.

   b. If Project is a linear construction project (e.g.: road, utilities, etc.), post notice in a publicly accessible location near active construction. Move notice as necessary.

3. Post a notice to equipment and vehicles operators, instructing them to stop, check, and clean tires of debris and mud before driving onto traffic lanes. Post at each stabilized construction access area.

4. Post a notice of waste disposal procedures in a readily visible location on site.

3.07 ON-SITE WASTE MATERIAL STORAGE

A. On-site waste material storage shall be self-contained and shall satisfy appropriate local, state, and federal rules and regulations.

B. Prepare list of waste material to be stored on-site. Update list as necessary to include up-to-date information. Keep a copy of updated list with the SWP3.

C. Prepare description of controls to reduce pollutants generated from on-site storage. Include storage practices necessary to minimize exposure of materials to storm water, and spill prevention and response measures consistent with best management practices. Keep a copy of the description with the SWP3.

3.08 NOTICE OF TERMINATION

A. Submit a NOT, **ATTACHMENT 7** of this Section 01410, to Project Manager within 30 days after:

1. Final stabilization has been achieved on all portions of the site that are the responsibility of the Contractor; or

2. Another operator has assumed control over all areas of the site that have not been stabilized; and

3. All silt fences and other temporary erosion controls have either been removed, scheduled to be removed as defined in the SWP3, or transferred to a new operator if the new operator has sought permit coverage.

B. Project Manager will complete City's NOT and submit Contractor and City's notices to the TCEQ and MS4 entities.

END OF SECTION

PAGE LEFT INTENTIONALLY BLANK

ATTACHMENT 1

Notice of Intent (NOI) for Storm Water Discharges Associated with Construction Activity under the TPDES Construction General Permit (TXR150000)

TCEQ

For help completing this application, read the TXR150000 NOI Instructions (TCEQ-20022-Instructions).

TCEQ Office Use Only
TPDES Permit Number: TXR15 __|__|__|__| - NO
GIN Number: |_____|

A. Construction Site Operator ☐ New ☐ No Change Customer Reference Number: CN_____

Name:_____

Mailing Address:_____ City:_____ State:____ Zip Code:_____

Country Mailing Information (*if outside USA*) Territory:_____ Country Code:_____ Postal Code:_____

Phone Number:_____ Extension:_____ Fax Number:_____

E-mail Address:_____

Type of Operator: ☐ Individual ☐ Sole Proprietorship - D.B.A. ☐ Partnership ☐ Corporation ☐ Federal Government ☐ State Government ☐ County Government ☐ City Government ☐ Other:_____

Independent Operator? ☐ Yes ☐ No Number of Employees: ☐ 0-20 ☐ 21-100 ☐ 101-250 ☐ 251-500 ☐ 501 or higher

Federal Tax ID:_____ State Franchise Tax ID Number:_____ DUNS Number:_____

B. Billing Address

Name:_____

Mailing Address:_____ City:_____ State:____ Zip Code:_____

Country Mailing Information (*if outside USA*) Territory:_____ Country Code:_____ Postal Code:_____

C. Project / Site Information ☐ New ☐ No Change Regulated Entity Reference Number: RN_____

Name:_____

Mailing Address:_____ City:_____ State:____ Zip Code:_____

Physical Address:_____ City:_____ County:_____ Zip Code:_____

Location Access Description:_____

Latitude:___°___'___" N Longitude:___°___'___" W Degrees (°), Minutes ('), and Seconds (")

Latitude:_____ Longitude: -_____ Decimal Form

Standard Industrial Classification (SIC) code:_____ Also, describe the construction activity at this site (*do not repeat the SIC code*):

_____

Has a storm water pollution prevention plan been prepared as specified in the general permit (TXR150000)? ☐ Yes ☐ No

Estimated area of land disturbed (to the nearest acre):_____ Is the project / site located on Indian Country Lands? ☐ Yes ☐ No

Does this project / site discharge storm water into a municipal separate storm sewer system (MS4)? ☐ Yes ☐ No

If yes, provide the name of the MS4 operator:_____

Provide the name or segment number of the water body that receives storm water from this project / site:_____

D. Contact - If the TCEQ needs additional information regarding this application, who should be contacted?

Name:_____ Title:_____

Phone Number:_____ Extension:_____ Fax Number:_____

E-mail Address:_____

E. Payment Information - Check / Money Order Number:_____ Name on Check / Money Order:_____

F. Certification

I certify under penalty of law that this document was prepared under my direction or supervision in accordance with a system designed to assure that qualified personnel properly gather and evaluate the information submitted. Based on my inquiry of the person or persons who manage the system, or those persons directly responsible for gathering the information, the information submitted is, to the best of my knowledge and belief, true, accurate, and complete. I am aware there are significant penalties for submitting false information, including the possibility of fine and imprisonment for knowing violations.

Construction Site Operator:

Prefix:_____ First:_____ Middle:_____

Last:_____ Suffix:_____ Title:_____

Signature:_____ Date:_____

If you have questions on how to fill out this form or about the storm water program, please contact us at (512) 239-4671.
Individuals are entitled to request and review their personal information that the agency gathers on its forms. They may also have any errors in their information corrected. To review such information, contact us at (512) 239-3282.

The completed NOI must be mailed to the following address. Use the attached document to submit the $100 application fee. Please note that the NOI and application fee are submitted separately to different addresses.

Texas Commission on Environmental Quality
Storm Water & General Permits Team; MC - 228
P.O. Box 13087
Austin, Texas 78711-3087

TCEQ-20022 (05/03) **Page 1 of 2**

ATTACHMENT 1

Texas Commission on Environmental Quality
Payment Submittal Form

The storm water application fee shall be sent under separate cover to the Texas Commission on Environmental Quality.

This form must be used to submit your Storm Water Application Fee. Please complete the following information, staple your check in the space provided at the bottom of this document, and mail it to:

BY REGULAR U.S. MAIL

Texas Commission on Environmental Quality
Financial Administration Division
Cashier's Office, MC-214
P.O. Box 13088
Austin, TX 78711-3088

BY OVERNIGHT/EXPRESS MAIL

Texas Commission on Environmental Quality
Financial Administration Division
Cashier's Office, MC-214
12100 Park 35 Circle
Austin, TX 78753

Fee Code: GPA

Storm Water General Permit: TXR150000

Check / Money Order No: _____

Amount of Check/Money Order: _____

Date of Check or Money Order: _____

Name on Check or Money Order: _____

Facility / Site Name: _____

Facility / Site Physical Address: _____

City: _____

Zip Code: _____

Staple Check In This Space

ATTACHMENT 1

Completing the Notice of Intent for Storm Water Discharges Associated with Construction Activity under the TPDES Construction General Permit (TXR150000)

A. Construction Site Operator Information

Check boxes and Customer Reference Number

These boxes designate the operator's status as a TCEQ "customer"—in other words, an individual or business that is involved in an activity that we regulate. We assign each customer a number that begins with "CN," followed by nine digits. ***This is not a permit number, registration number, or license number.*** In the remainder of this section, we will use "this customer" to mean the operator for Part A of the form.

- If this customer has not been assigned a Customer Reference Number or if this number is unknown, check "New" and leave the space for the Customer Reference Number blank.
- If this customer has already been assigned this number, enter the operator's Customer Reference Number and:
  - Check "No Change" if all the remaining customer information is the same as previously reported. However, you must still complete most blanks in this form for this notice of intent to be valid.
  - If this customer's information has changed since the last time it was reported to the TCEQ, check neither box and complete the remainder of this notice of intent.
- ***Do not enter a permit number, registration number, or license number in place of the Customer Reference Number.***

Name

Enter the legal name of this customer as authorized to do business in Texas. Include any abbreviations (LLC, Inc., etc.)

Mailing Address

Enter a central and general mailing address for this customer to receive mail from the TCEQ. For example, if this customer is a large company, this address might be the corporate or regional headquarters. On the other hand, for a smaller business, this address could be the same as the site address.

If this is a street address, please follow US Postal Service standards. In brief, these standards require this information in this order.

- the "house" number—for example, the 1401 in 1401 Main St
- if there is a direction before the street name, the one- or two-letter abbreviation of that direction (N, S, E, W, NE, SE, SW, or NW)
- the street name (if a numbered street, do not spell out the number—for example, 6th St, not Sixth St)
- an appropriate abbreviation of the type of street—for example, St, Ave, Blvd, Fwy, Exwy, Hwy, Cr, Ct, Ln
- if there is a direction after the street name, the one- or two-letter abbreviation of that direction (N, S, E, W, NE, SE, SW, or NW)
- if there is a room number, suite number, or company mail code

City, State, *and* ZIP Code

Enter the name of the city, the two-letter USPS abbreviation for the state (for example, TX), and the ZIP Code. (Enter the full ZIP+4 if you know it.)

Country Mailing Information

If this address is ***outside*** the United States, enter the territory name, country code, and any non-ZIP mailing codes or other non–U.S. Postal Service features here. If this address is ***inside*** the United States, leave these spaces blank.

Phone Number *and* Extension

This number should correspond to this customer's mailing address given earlier. Enter the area code and phone number here. Leave "Extension" blank if this customer's phone system lacks this feature.

Fax Number

This number should correspond to this customer's mailing address given earlier. Enter the area code and fax number here.

E-mail Address

As with the mailing address, this should be a general address that is appropriate for e-mail to this customer's central or regional headquarters, if applicable.

If "No Change" was checked for this customer, you may skip the rest of the fields in this part of the form and continue to the next part of the NOI.

Type of Operator

Check *only one* box.

Check ...	*if this customer*
Individual	is a person and has not established a business to do whatever causes them to be regulated by us.
Sole Proprietorship—D.B.A.	is a business that is owned by only one person and has not been incorporated. This business may: • be under the person's name • have its own name ("doing business as," or d.b.a.) • have any number of employees
Partnership	is a business that is established as a partnership as defined by the Texas Secretary of State's Office.
Corporation	meets all of these conditions: • is a legally incorporated entity under the laws of any state or country • is recognized as a corporation by the Texas Secretary of State • has proper operating authority to operate in Texas
Federal, state, county, or city government (as appropriate)	is either an agency of one of these levels of government or the governmental body itself (If a utility district, water district, tribal government, college district, council of governments, or river authority, check "Other" and write in the specific type of government.)
Other	fits none of the above descriptions. Enter a short description of the type of customer in the blank provided.

Independent Operator?

Check "No" if this customer is a subsidiary or part of a larger company. Otherwise, check "Yes."

Number of Employees

Check one box to show the number of employees for this customer's entire company, at all locations. ***This is not necessarily the number of employees at the site named in this NOI.***

Federal Tax ID

All businesses, except for some small sole proprietors, should have a federal taxpayer identification number (TIN). Enter this number here. Use no prefixes, dashes, or hyphens. Individuals and sole proprietors do not need to provide a federal tax ID.

State Franchise Tax ID

Corporations and limited liability companies that operate in Texas are issued a franchise tax identification number. If this customer is a corporation or limited liability company, enter this number here.

DUNS Number

Most businesses have a DUNS (Data Universal Numbering System) number issued by Dun and Bradstreet Corp. If this customer has one, enter it here.

B. Billing Address

We will mail the annual fee invoice for this site to the address entered in this section.

Name

Enter the legal name of the person or business to which we should mail this site's fee invoice each year.

Mailing Address

Enter the specific mailing address to which we should mail this site's fee invoice each year. If this is a street address, please follow the US Postal Service standards as described under "A. Construction Site Operator Information" on page 1 of these instructions.

City, State, *and* ZIP Code

Enter the name of the city, the two-letter USPS abbreviation for the state (for example, TX), and the ZIP Code. (Enter the full ZIP+4 if you know it.)

Country Mailing Information

If this address is ***outside*** the United States, enter the territory name, country code, and any non-ZIP mailing codes or other non–U.S. Postal

ATTACHMENT 1

Service features here. If this address is ***inside*** the United States, leave these spaces blank.

C. Project / Site Information

Check boxes *and* Regulated Entity Reference Number
These boxes designate this site's status as a TCEQ "regulated entity"—in other words, a location where an activity that we regulate occurs. We assign each regulated entity a number that begins with "RN," followed by nine digits. ***This is not a permit number, registration number, or license number.***

- If this site has not been assigned a Regulated Entity Reference Number or if this number is unknown, check "New" and leave the space for the Regulated Entity Reference Number blank.
- If this site has already been assigned this number, enter the Regulated Entity Reference Number and:
  - Check "No Change" if all the remaining information is the same as previously reported. However, even if there has been no change, you must complete this section at least through "E-mail Address" for this NOI to be valid.
  - If this site's information has changed since the last time it was reported to the TCEQ, check neither box and complete the remainder of this notice of intent.
- ***Do not enter a permit number, registration number, or license number in place of the Regulated Entity Reference Number.***

Name
Enter the name by which you want this site to be known to the TCEQ.

Mailing Address
Enter the specific mailing address for this site. If this is a street address, please follow the US Postal Service standards as described under "A. Construction Site Operator Information" on page 1 of these instructions. If the project / site's mailing address is the same as what is provided in Section A, you may enter "Same as Section A".

City, State, *and* ZIP Code
Enter the name of the city, the two-letter USPS abbreviation for the state (for example, TX), and the ZIP Code. (Enter the full ZIP+4 if you know it.)

Physical Address
Enter the physical address of the site itself. TCEQ staff should be able to use this address to find the site. Please follow the US Postal Service standards as described under "A. Construction Site Operator Information" on page 1 of these instructions. If the project / site does not have a physical address, enter "No Address".

City, County, *and* ZIP Code
Enter the name of the city, the county, and the ZIP Code. (Enter the full ZIP+4 if you know it.) This information must be provided even if you have entered "No Address" in the previous field.

Location Access Description
Enter a physical description of the location of the site based on highway intersections and/or permanent landmarks.

Latitude *and* Longitude
Enter the latitude and longitude of the site in ***either*** degrees, minutes, and seconds ***or*** decimal form.

For help obtaining the latitude and longitude, go to:
http://www.tnrcc.state.tx.us/gis/drgview.html

Standard Industrial Classification (SIC) Code and Activity Description

Provide the SIC code that best describes the construction activity being conducted at the site.

For help with SIC codes, go to:
http://www.osha.gov/oshstats/sicser.html

In addition to the SIC code, you must also provide a description of the construction activity being conducted at the site. This may include such descriptions as: "Apartment Building Construction" or "Shopping Center Construction."

Storm Water Pollution Prevention Plan
This plan identifies the areas and activities that could produce contaminated runoff at your site and then tells how you will ensure that this contamination is mitigated. For example, in describing your mitigation measures, your site's plan might identify the devices that collect and filter storm water, tell how those devices are to be maintained, and tell how frequently that maintenance is to be carried out. ***You must develop this plan before you complete this NOI.*** This plan must be available for a TCEQ investigator to review on request. Specific requirements for the development of the plan can be found in the *Texas Pollutant Discharge Elimination System Construction General Permit (TXR150000)*.

Estimated Area of Land Disturbed
Provide the approximate number of acres that the construction site will disturb. It is appropriate to enter a value less than 5, only if the project is part of a larger common plan that disturbs five or more acres. If the acreage is less than 1, enter 1. "Disturb" means any clearing, grading, excavating, or other similar activities.

Is the site located on Indian Country Lands?
Check "Yes" only if the site is on a reservation or other areas designated by the federal government as Indian Country Lands. If not, check "No."

Destination of Storm Water Discharge
The storm water from your site eventually reaches a receiving water body such as a local stream or lake, possibly via a drainage ditch. The discharge may initially be into a municipal separate storm sewer system (MS4). Check the appropriate boxes for whether storm water is discharged into an MS4. If you checked "Yes" to "An MS4?", then enter the name of the entity that operates the storm sewer—often a city, town, or utility district, but possibly another form of government.

You must also provide the name of the water body that receives the discharge from the construction site (a local stream or lake). Storm water may be discharged directly to a receiving stream or via a storm sewer system. If known, please include the segment number if the discharge is to a classified water body.

For a map that includes segment numbers, go to:
http://www.tnrcc.state.tx.us/water/quality/data/index.html

D. Contact

Give all the relevant information for the person whom TCEQ can contact if there are questions about any of the information on this form—perhaps the same person who completed the form.

E. Payment Information

Provide the number and account holder name from the check or money order used to pay the $100 application fee.

F. Certification

The operator must sign and date this statement to validate this NOI. Be sure to enter the full legal name of the person signing the form and the relevant title—for example, "Operator," "Vice-President," or "Partner." Use the "Prefix" blank for such titles as Dr., Mr., or Ms., as desired. Use the "Suffix" blank for such designations as Ph.D., Jr., Sr., III, or J.D., if applicable.

For a corporation, the application shall be signed by a responsible corporate officer. A responsible corporate officer means a president, secretary, treasurer, or vice-president of the corporation in charge of a principal business function, or any other person who performs similar policy or decision-making functions for the corporation; or the manager of one or more manufacturing, production, or operating facilities employing more than 250 persons or having gross annual sales or expenditures exceeding $25 million (in second-quarter 1980 dollars), if authority to sign documents has been assigned or delegated to the manager in accordance with corporate procedures. Corporate procedures governing authority to sign permit applications may provide for assignment or delegation to applicable corporate positions rather than to specific individuals.

For a partnership or sole proprietorship, the application shall be signed by a general partner or the proprietor, respectively.

For a municipality, state, federal, or other public agency, the application shall be signed by either a principal executive officer or a ranking elected official. For purposes of this application, a principal executive officer of a federal agency includes the chief executive officer of the agency, or a senior executive officer having responsibility for the overall operations of a principal geographic unit of the agency (e.g. regional administrator of the United States Environmental Protection Agency).

Questions?

If you have questions about any of the information on this form, contact our Storm Water Program at 512/239-4671 or look for "Storm Water" on our Web site.

www.tceq.state.tx.us

ATTACHMENT 2

CONSTRUCTION SITE NOTICE

FOR THE
Texas Commission on Environmental Quality (TCEQ)
Storm Water Program

TPDES GENERAL PERMIT TXR150000

The following information is posted in compliance with **Part II.D.2.** of the TCEQ General Permit Number TXR150000 for discharges of storm water runoff from construction sites. Additional information regarding the TCEQ storm water permit program may be found on the internet at:
www.tnrcc.state.tx.us/permitting/waterperm/wwperm/tpdestorm

Contact Name and Phone Number:	
Project Description: (Physical address or description of the site's location, estimated start date and projected end date, or date that disturbed soils will be stabilized)	
Location of Storm Water Pollution Prevention Plan :	

For Construction Sites Authorized Under Part II.D.2. (Obtaining Authorization to Discharge) the following certification must be completed:

I _____ (Typed or Printed Name Person Completing This Certification) certify under penalty of law that I have read and understand the eligibility requirements for claiming an authorization under Part II.D.2. of TPDES General Permit TXR150000 and agree to comply with the terms of this permit. A storm water pollution prevention plan has been developed and implemented according to permit requirements. A copy of this signed notice is supplied to the operator of the MS4 if discharges enter an MS4 system. I am aware there are significant penalties for providing false information or for conducting unauthorized discharges, including the possibility of fine and imprisonment for knowing violations.

_____ _____
Signature and Title Date

PAGE LEFT INTENTIONALLY BLANK

ATTACHMENT 3

TPDES OPERATOR'S INFORMATION

Owner's Name and Address: City of Houston

Mr. _____
(City Official)

_____
(Department)
P. O. Box 1562
Houston, Texas 77251-1562
(713) 247-1000

Contractors' Names and Addresses:

General Contractor: _____

Telephone: _____

Site Superintendent: _____

Telephone: _____

Erosion Control and Maintenance Inspection: _____

Telephone: _____

Subcontractors' Names and Addresses:

_____ _____

Phone: _____ Phone: _____

Note: Insert name, address, and telephone number of person or firms

PAGE LEFT INTENTIONALLY BLANK

ATTACHMENT 4

CONTRACTOR'S / SUBCONTRACTOR'S

CERTIFICATION FOR TPDES PERMITTING

I certify under penalty of law that I understand the terms and conditions of TPDES General Permit No. TXR150000 and the Storm Water Pollution Prevention Plan for the construction site identified as part of this certification.

Signature: _____

Name: (printed or typed) _____

Title: _____

Company: _____

Address: _____

Date: _____

Signature: _____

Name: (printed or typed) _____

Title: _____

Company: _____

Address: _____

Date: _____

Signature: _____

Name: (printed or typed) _____

Title: _____

Company: _____

Address: _____

Date: _____

PAGE LEFT INTENTIONALLY BLANK

ATTACHMENT 5

EPA NPDES Construction Inspection Form

The following inspection is being performed in compliance with Part IV.D.4. of the NPDES Region 6 Storm Water Construction General Permit [63 Fed. Reg. 36502] and being retained in accordance with Part V of the Permit. Qualified personnel (provided by the permittee or cooperatively by multiple permittees) shall inspect disturbed areas of the construction site that have not been finally stabilized, areas used for storage of materials that are exposed to precipitation, placement and effectiveness of structural control measures, and locations where vehicles enter or exit the site. Inspections shall be performed at least once every 14 days and within 24 hours of the end of a storm event of 0.5 inches or greater. Where sites have been temporarily stabilized, runoff is unlikely due to winter conditions, or during seasonal arid periods in arid areas (0-10 inches of rainfall annually) and semi-arid areas (10-20 inches annually) such inspections shall be conducted at least once every month. This form is primarily intended for use with construction projects in Texas and New Mexico. Permittees on Indian Country lands in Oklahoma, Louisiana and Arkansas and some oil and gas facilities in Oklahoma may use this form if they are eligible for this permit. Other facilities need to check with their NPDES authority before using this form.

If you do not know your NPDES Permit Number, contact the NOI Processing Center at (301)495-4145. This form was prepared as an example and it is not a required form for use with the permit. Alternative forms may be used if they contain all of the required information as set forth in the permit. This form and additional information regarding the NPDES Region 6 storm water program may be found on the Internet at http://www.epa.gov/region6/sw/. Any person with a complaint about the operation of this facility in regards to this permit should contact EPA Region 6 at (214)665-7112.

Permit Number(s) covered by this inspection (e.g. owners, developers, general contractor, builders)	
Signature and Certification in accordance with Part VI.G of the permit:	I certify under penalty of law that this document and all attachments were prepared under my direction or supervision in accordance with a system designed to assure that qualified personnel properly gathered and evaluated the information submitted. Based on my inquiry of the person or persons who manage the system, or those persons directly responsible for gathering the information, the information submitted is, to the best of my knowledge and belief, true, accurate, and complete. I am aware that there are significant penalties for submitting false information, including the possibility of fine and imprisonment for knowing violations. Signature_____Date_____
Date of Inspection	
Inspector Name	
Is there a copy of the permit language with the SWPPP?	❒ YES ❒ NO
Is the inspector qualified and are the qualifications documented in the SWPPP?	❒ YES ❒ NO
Is an NPDES storm water construction sign posted at the entrance for all permittees?	❒ YES ❒ NO

You may want to use EPA Region 6 construction checklist to assure components of the SWPPP are complete. This form, the construction sign, and the checklist are available on the Region 6 NPDES Storm Water Forms and Documents web page which may be found on the internet at http://www.epa.gov/earth1r6/6en/w/formsw.htm. In addition to the checklist, you should provide a narrative (see next page) on the existing Best Management Practices and Structural Controls found during each inspection. Any problems identified in an inspection should be corrected within 7 days. The inspection should cover all components of the SWPPP and all potential pollutants. While eroded soil is the primary pollutant of concern, do not forget to inspect for other pollutant sources such as fuel tanks, paints, solvents, stabilization materials, concrete hardner, batch plants, and construction debris. The inspector will need to update the SWPPP to reflect findings of the inspection. The site map should be updated after an inspection to show controls that have been added or removed, to ensure the site map is kept current in accordance with Part IV.C. of the permit.

Revision 4, March 1, 2000

ATTACHMENT 5

Narrative Findings of the inspection:

Observations should include any findings of Best Management Practices or controls that are not in accordance with the SWPPP. If a control is not in place or failed, observe the reason why. A control removed temporarily for work is not necessarily a violation if properly recorded in the SWPPP. If it has been removed, record why it was removed and, if applicable, when it will be reinstalled. If the control has failed, observe the conditions so a conclusion may be made as to wether the control failed for improper maintenance or improper design. The qualified inspector will know when a failed control is inadequate and should be replaced by an improved control mechanism. Qualified inspectors are to have authority to make changes to the SWPPP to assure compliance. Controls that have not been installed should be given a reason why they are not installed and/or a scheduled date for installation if they are designed for a later phase of construction. After the inspection, the SWPPP and its site map should be updated to reflect current conditions of controls and Best Management Practices at the time of the inspection. This includes removing uninstalled controls from the site map or otherwise denoting on the site map if they are no longer installed if the controls have been removed because they are no longer necessary (e.g. stabilization has been achieved in that area).

ATTACHMENT 6

City of Houston

Storm Water Pollution Prevention Plan
Construction Site Inspection Report

TPDES/EPA Permit Number _____

COH Storm Water Quality Permit Number _____

DATE _____

No exceptions noted.

The following must be corrected prior to continuing work:

Public Notice improperly posted

Initial Construction Site Inspection Report information requires updating

Copy of NOI not on site

Storm water pollution prevention plan not on site

Erosion and sediment controls improperly installed

Erosion and sediment control devices improperly maintained

Fueling or washout areas not properly protected

Portocan or other sanitary facilities not properly protected

Self-inspection and maintenance records incomplete

Sediment from site outside area of construction

Other (see description below)

_____

_____

Please contact the Storm Water Quality Engineer at
611 Walker, RA-257, Houston TX 77002
713-837-7383 fax 713-837-0570

Once the above items have been corrected, call to arrange for reinspection. No further inspections for any construction related activity shall be made until the above items have been corrected.

Inspector's Signature	Contractor's Signature
Inspector's Name	Contractor's Name

not present

Distribution Stormwater Quality Engineer, Code Enforcement, Inspector, Operator
(Operator is Contractor)

Form _____ (10-01-01)

PAGE LEFT INTENTIONALLY BLANK

ATTACHMENT 7

Notice of Termination (NOT) for Storm Water Discharges Associated with Construction Activity under the TPDES Construction General Permit (TXR150000)

TCEQ Office Use Only
TPDES Permit Number: TXR15____ - NO
GIN Number: ____

For help completing this application, read the TXR150000 NOI Instructions (TCEQ 20023-Instructions).

A. TPDES Permit Number: TXR15_____

B. Construction Site Operator Customer Reference Number: CN_____
Name:_____
Mailing Address:_____
City:_____ State:_____ Zip Code:_____
Country Mailing Information (*if outside USA*) Territory:_____ Country Code:_____ Postal Code:_____
Phone Number:_____ Extension:_____ Fax Number:_____
E-mail Address:_____

C. Project / Site Information Regulated Entity Reference Number: RN_____
Name:_____
Physical Address:_____
Location Access Description:_____
City:_____ County:_____ Zip Code:_____

D. Contact - If the TCEQ needs additional information regarding this termination, who should be contacted?
Name:_____ Title:_____
Phone Number:_____ Extension:_____ Fax Number:_____
E-mail Address:_____

E. Certification
I certify under penalty of law that authorization under the TPDES Construction General Permit (TXR150000) is no longer necessary based on the provisions of the general permit. I understand that by submitting this Notice of Termination, I am no longer authorized to discharge storm water associated with construction activity under the general permit TXR150000, and that discharging pollutants in storm water associated with construction activity to waters of the U.S. is unlawful under the Clean Water Act where the discharge is not authorized by a TPDES permit. I also understand that the submittal of this Notice of Termination does not release an operator from liability for any violations of this permit or the Clean Water Act.

Construction Site Operator Representative:

Prefix:_____ First:_____ Middle:_____
Last:_____ Suffix:_____
Title:_____

Signature:_____ Date:_____

If you have questions on how to fill out this form or about the storm water program, please contact us at (512) 239-4671. Individuals are entitled to request and review their personal information that the agency gathers on its forms. They may also have any errors in their information corrected. To review such information, contact us at (512) 239-3282.

The completed NOT must be mailed to the following address:

Texas Commission on Environmental Quality
Storm Water & General Permits Team; MC - 228
P.O. Box 13087
Austin, Texas 78711-3087

TCEQ - 20023 (02/03) **Page 1 of 1**

PAGE LEFT INTENTIONALLY BLANK

ATTACHMENT 7

Completing the Notice of Termination for Storm Water Discharges Associated with Construction Activity under the TPDES Construction General Permit (TXR150000)

Who May File a Notice of Termination (NOT) Form
Permittees disturbing 5 acres or more (or part of a larger common plan of development or sale disturbing 5 acres or more) who are presently covered under the Texas Pollutant Discharge Elimination System (TPDES) Construction General Permit must submit a Notice of Termination (NOT) when final stabilization has been achieved on all portions of the site that is the responsibility of the permittee; or another permitted operator has assumed control over all areas of the site that have not been finally stabilized and all silt fences and other temporary erosion controls have either been removed, scheduled for removal as defined in the SWP3, or transferred to a new operator if the new operator has sought permit coverage. Erosion controls that are designed to remain in place for an indefinite period, such as mulches and fiber mats, are not required to be removed or scheduled for removal.

Final Stabilization occurs when either of the following conditions are met:

(a) All soil disturbing activities at the site have been completed and a uniform (e.g, evenly distributed, without large bare areas) perennial vegetative cover with a density of 70% of the native background vegetative cover for the area has been established on all unpaved areas and areas not covered by permanent structures, or equivalent permanent stabilization measures (such as the use of riprap, gabions, or goetextiles) have been employed.

(b) For individual lots in a residential construction site by either:

(1) the homebuilder completing final stabilization as specified in condition (a) above; or

(2) the homebuilder establishing temporary stabilization for an individual lot prior to the time of transfer of the ownership of the home to the buyer and after informing the homeowner of the need for, and benefits of, final stabilization.

(c) For construction activities on land used for agricultural purposes (e.g. pipelines across crop or range land), final stabilization may be accomplished by returning the disturbed land to its preconstruction agricultural use. Areas disturbed that were not previously used for agricultural activities, such as buffer strips immediately adjacent to a surface water and areas which are not being returned to their preconstruction agricultural use must meet the final stabilization conditions of condition (a) above.

A. TPDES Permit Number
Provide the TPDES permit number assigned to the operator of the construction site.

B. Construction Site Operator Information
Customer Reference Number
This number designates the operator's status as a TCEQ "customer"—in other words, an individual or business that is involved in an activity that we regulate. We assign each customer a number that begins with "CN," followed by nine digits. ***This is not a permit number, registration number, or license number.*** In the remainder of this section, we will use "this customer" to mean the operator for Part B of the form.

- If this customer has not been assigned a Customer Reference Number, leave the space for the Customer Reference Number blank.
- If this customer has already been assigned this number, enter the operator's Customer Reference Number.
- ***Do not enter a permit number, registration number, or license number in place of the Customer Reference Number.***

Name
Enter the legal name of this customer as authorized to do business in Texas. Include any abbreviations (LLC, Inc., etc.).

Mailing Address
Enter a central and general mailing address for this customer to receive mail from the TCEQ. For example, if this customer is a large company, this address might be the corporate or regional headquarters. On the other hand, for a smaller business, this address could be the same as the site address.

If this is a street address, please follow US Postal Service standards. In brief, these standards require this information in this order:

- the "house" number—for example, the 1401 in 1401 Main St
- if there is a direction before the street name, the one- or two-letter abbreviation of that direction (N, S, E, W, NE, SE, SW, or NW)
- the street name (if a numbered street, do not spell out the number—for example, 6th St, not Sixth St)
- an appropriate abbreviation of the type of street—for example, St, Ave, Blvd, Fwy, Exwy, Hwy, Cr, Ct, Ln
- if there is a direction after the street name, the one- or two-letter abbreviation of that direction (N, S, E, W, NE, SE, SW, or NW)
- if there is a room number, suite number, or company mail code

City, State, *and* ZIP Code
Enter the name of the city, the two-letter USPS abbreviation for the state (for example, TX), and the ZIP Code. (Enter the full ZIP+4 if you know it.)

ATTACHMENT 7

Country Mailing Information
If this address is ***outside*** the United States, enter the territory name, country code, and any non-ZIP mailing codes or other non–U.S. Postal Service features here. If this address is ***inside*** the United States, leave these spaces blank.

Phone Number *and* Extension
This number should correspond to this customer's mailing address given earlier. Enter the area code and phone number here. Leave "Extension" blank if this customer's phone system lacks this feature.

Fax Number
This number should correspond to this customer's mailing address given earlier. Enter the area code and fax number here.

E-mail Address
As with the mailing address, this should be a general address that is appropriate for e-mail to this customer's central or regional headquarters, if applicable.

C. Project / Site Information

Regulated Entity Reference Number
This number designates this site's status as a TCEQ "regulated entity"—in other words, a location where an activity that we regulate occurs. We assign each regulated entity a number that begins with "RN," followed by nine digits. ***This is not a permit number, registration number, or license number.***

- If this site has not been assigned a Regulated Entity Reference Number, leave the space for the Regulated Entity Reference Number blank.
- If this site has already been assigned this number, enter the Regulated Entity Reference Number.
- ***Do not enter a permit number, registration number, or license number in place of the Regulated Entity Reference Number.***

Name
Enter the name by which you want this site to be known to the TCEQ.

Physical Address
Enter the physical address of the site itself. TCEQ staff should be able to use this address to find the site.

Location Description
Enter a physical description of the location of the site based on highway intersections and/or permanent landmarks.

City, County, *and* ZIP Code
Enter the name of the city, the county, and the ZIP Code. (Enter the full ZIP+4 if you know it.)

D. Contact

Give all the relevant information for the person whom TCEQ can contact if there are questions about any of the information on this form—perhaps the same person who completed the form.

E. Certification

The operator must sign and date this statement to validate this NOI. Be sure to enter the full legal name of the person signing the form and the relevant title—for example, "Operator," "Operator's attorney," or "Senior Site Manager." Use the "Prefix" blank for such titles as Dr., Mr., or Ms., as desired. Use the "Suffix" blank for such designations as Ph.D., Jr., Sr., III, or J.D., if applicable.

For a corporation, the application shall be signed by a responsible corporate officer. A responsible corporate officer means a president, secretary, treasurer, or vice-president of the corporation in charge of a principal business function, or any other person who performs similar policy or decision-making functions for the corporation; or the manager of one or more manufacturing, production, or operating facilities employing more than 250 persons or having gross annual sales or expenditures exceeding $25 million (in second-quarter 1980 dollars), if authority to sign documents has been assigned or delegated to the manager in accordance with corporate procedures. Corporate procedures governing authority to sign permit applications may provide for assignment or delegation to applicable corporate positions rather than to specific individuals.

For a partnership or sole proprietorship, the application shall be signed by a general partner or the proprietor, respectively.

For a municipality, state, federal, or other public agency, the application shall be signed by either a principal executive officer or a ranking elected official. For purposes of this application, a principal executive officer of a federal agency includes the chief executive officer of the agency, or a senior executive officer having responsibility for the overall operations of a principal geographic unit of the agency (e.g. regional administrator of the United States Environmental Protection Agency).

Questions?

If you have questions about any of the information on this form, contact our Storm Water Program at 512/239-4671 or look for "Storm Water" on our Web site:
www.tceq.state.tx.us

Section 01422

REFERENCE STANDARDS

PART 1 GENERAL

1.01 SECTION INCLUDES

A. Section includes general quality assurance as related to Reference Standards and a list of references.

1.02 QUALITY ASSURANCE

A. For Products or workmanship specified by association, trade, or Federal Standards, comply with requirements of the standard, except when more rigid requirements are specified or are required by applicable codes.

B. Conform to reference standard by date of issue current on the date as stated in the General Conditions.

C. Request clarification from Project Manager before proceeding should specified reference standards conflict with Contract documents.

1.03 SCHEDULE OF REFERENCES

AASHTO	American Association of State Highway and Transportation Officials 444 North Capitol Street, N.W. Washington, DC 20001
ACI	American Concrete Institute P.O. Box 9094 Farmington Hills, MI 48333-9094
AGC	Associated General Contractors of America 333 John Carlyle Street Alexandria, VA 22314
AI	Asphalt Institute Research Park Drive P.O. Box 14052 Lexington, KY 40512

REFERENCE STANDARDS

AITC	American Institute of Timber Construction 7012 S. Revere Parkway, Suite 140 Englewood, CO 80112
AISC	American Institute of Steel Construction One East Wacker Dr. Chicago, IL 60601
AISI	American Iron and Steel Institute 1101 17th Street NW, Suite 1300 Washington, DC 20036
ASME	American Society of Mechanical Engineers Three Park Avenue New York, NY 10016
ANSI	American National Standards Institute 1819 L Street NW Sixth Floor Washington, D.C. 20036
APA	American Plywood Association Box 11700 Tacoma, WA 98411
API	American Petroleum Institute 1220 L Street, N.W. Washington, DC 20005
AREA	American Railway Engineering and Maintenance-of-Way-Association 8201 Corporate Drive, Suite 1125 Landover, Maryland 20785
ASTM	American Society for Testing and Materials 100 Barr Harbor Drive West Conshohocken, PA 19428
AWPA	American Wood-Preservers' Association P.O. Box 5690 Granbury, TX 76049
AWS	American Welding Society 550 NW 42nd Avenue Miami, FL 33126

AWWA	American Water Works Association 6666 West Quincy Avenue Denver, CO 80235
COH	City of Houston P.O. Box 1562 Houston, TX 77251-1562
CLFMI	Chain Link Fence Manufacturers Institute 9891 Broken Land Parkway, Suite 300 Columbia, MD 21046
CRSI	Concrete Reinforcing Steel Institute 933 Plum Grove Road Schaumburg, IL 60173-4758
EJMA	Expansion Joint Manufacturers Association 25 North Broadway Tarrytown, NY 10591
FS	Federal Standardization Documents General Services Administration Specifications Unit (WFSIS) 7th and D Streets, S.W. Washington, DC 20406
ICEA	Insulated Cable Engineer Association P.O. Box 440 S. Yarmouth, MA 02664
IEEE	Institute of Electrical and Electronics Engineers 445 Hoes Lane P.O. Box 440 Piscataway, NJ 08855-459
ISA	International Society of Arboriculture P.O. Box 3129 Champaign, IL 61826-3129
MIL	Military Specifications General Services Administration Specifications Unit (WFSIS) 7th and D Streets, S.W. Washington, DC 20406

NACE	National Association of Corrosion Engineers 1440 South Creek Drive Houston, TX 77084-4906
NEMA	National Electrical Manufacturers' Association 1300 North 17th Street, Suite 1847 Rosslyn, VA 22209
NFPA	National Fire Protection Association 1 Batterymarch Park P.O. Box 9101 Quincy, MA 02269-9101
OSHA	Occupational Safety Health Administration U.S. Department of Labor Office of Public Affairs – Room N3647 Washington, DC 20210
PCA	Portland Cement Association 5420 Old Orchard Road Skokie, IL 60077-1083
PCI	Prestressed Concrete Institute 209 W. Jackson Blvd. Chicago, IL 60606
SDI	Steel Deck Institute P.O. Box 25 Fox River Grove, IL 60021
SSPC	Society for Protective Coatings (Steel Structures Painting Council) 40 24th Street, Sixth Floor Pittsburgh, PA 15222
TAC	Texas Administrative Code Texas Water Resources Conservation Commission P. O. Box 13087 Library MC-196 Austin, TX 78711-3087
TxDOT	Texas Department of Transportation 125 East 11th Street Austin, TX 78701-2483

UL	Underwriters' Laboratories, Inc. 333 Pfingston Road Northbrook, IL 60062
UNI-BELL	UNI-BELL Pipe Association 2655 Villa Creek Drive, Suite 155 Dallas, TX 75234

PART 2 P R O D U C T S - Not Used

PART 3 E X E C U T I O N - Not Used

END OF SECTION

Section 01450

CONTRACTOR'S QUALITY CONTROL

PART 1 GENERAL

1.01 SECTION INCLUDES

A. Quality assurance and control of Installation and manufacturers' field services and reports.

1.02 QUALITY ASSURANCE AND CONTROL OF INSTALLATION

A. Monitor quality control over Suppliers, manufacturers, Products, services, site conditions and workmanship, to produce work of specified quality at no additional cost to the City.

B. Comply fully with manufacturers' Installation instructions, including each step in sequence.

C. Request clarification from Project Manager before proceeding when manufacturers' instructions conflict with the Contract.

D. Comply with specified standards as minimum requirements for the Work except when more stringent tolerances, codes, or specified requirements indicate higher standards or more precise workmanship.

E. Perform the Work by persons qualified to produce a specified level of workmanship.

1.03 REFERENCES

A. Obtain copies of standards and maintain at job site when required by individual Specification sections.

1.04 MANUFACTURERS' FIELD SERVICES AND REPORTS

A. When specified in individual Specification sections, or as required by Project Manager, provide Product suppliers' or manufacturers' technical representative to observe site conditions, conditions of surfaces and Installation, quality of workmanship, start-up of equipment, operator training, testing, adjusting and balancing of equipment as applicable and to initiate required operation. Conform to minimum time requirements for start-up operations and operator training when provided in Specification sections.

B. At Project Manager's request, submit qualifications of manufacturers' representative to Project Manager 15 days in advance of required representatives' services. Representative is subject to approval by Project Manager.

C. Manufacturer's representatives shall report observations and site decisions or instructions given to applicators or installers that are supplemental or contrary to a manufacturer's written instructions. Submit report within 14 days of observation to Project Manager for review.

PART 2 P R O D U C T S - Not Used

PART 3 E X E C U T I O N - Not Used

END OF SECTION

Section 01452

INSPECTION SERVICES

PART 1 GENERAL

1.01 SECTION INCLUDES

A. Inspection services and references

1.02 INSPECTION

A. City Engineer will appoint an Inspector to represent the City and perform inspections, tests, and other services specified in individual Specification sections.

B. City Engineer may also appoint, employ, and pay an independent firm to provide additional inspection or construction management services as indicated in Section 01454 - Testing Laboratory Services.

C. The independent firm will submit reports to Project Manager, indicating observations and results of tests and indicating compliance or noncompliance with Contract requirements.

D. Contractor shall assist and cooperate with the Inspector; furnish samples of materials, design mix, equipment, tools, and storage.

E. Contractor shall notify Project Manager 24 hours prior to expected time for operations requiring services.

F. Contractor shall sign and acknowledge reports for Inspector.

PART 2 PRODUCTS - Not Used

PART 3 EXECUTION - Not Used

END OF SECTION

Section 01454

TESTING LABORATORY SERVICES

PART 1 GENERAL

1.01 SECTION INCLUDES

A. Testing laboratory services and Contractor responsibilities related to those services.

1.02 REFERENCES

A. ASTM C 1077 - Standard Practice for Laboratories Testing Concrete and Concrete Aggregates for Use in Construction and Criteria for Laboratory Evaluation.

B. ASTM D 3666 - Standard Specification for Minimum Requirements for Agencies Testing and Inspecting Bituminous Paving Materials.

C. ASTM D 3740 - Standard Practice for Minimum Requirements for Agencies Engaged in the Testing and/or Inspection of Soil and Rock as Used in Engineering Design and Construction.

D. ASTM E 329 - Standard Specification for Minimum Requirements for Agencies Engaged in the Testing and/or Inspection of Materials Used in Construction.

E. ISO/TEC Guide 25 - General Requirements for the Competence of Calibration and Testing Laboratories.

1.03 SELECTION AND PAYMENT

A. The City will select, employ, and pay for services of an independent testing laboratory to perform inspection and testing identified in Part 3 of individual Specification sections.

B. Contractor shall employ and pay for services of an independent testing laboratory or laboratories to perform inspection and testing identified in Part 2 of individual Specification sections.

C. Employment of a testing laboratory by the City shall not relieve Contractor of its obligation to perform work in accordance with requirements of Contract documents.

D. The City will deduct a minimum two-hour charge for testing laboratory time from periodic progress payment when operations requiring testing or inspection are canceled without prior notification.

E. The City will deduct cost of retesting from periodic progress payment whenever failed work is removed, replaced and retested.

1.04 QUALIFICATION OF LABORATORY

A. Meet laboratory requirements of ASTM E 329 and applicable requirements of ASTM C 1077, ASTM D 3666, and ASTM D 3740.

B. Meet ISO/TEC Guide 17025 conditions for accreditation by the American Association for Laboratory Accreditation (A2LA) in specific fields of testing required in individual Specification sections.

C. If laboratory subcontracts are part of the testing services, such work will be placed with a laboratory complying with the requirements of this Section.

1.05 LABORATORY REPORTS

A. Testing laboratory shall provide and distribute copies of laboratory reports to the distribution list Project Manager provides at the pre-construction conference.

B. Keep one copy of each laboratory report distributed or faxed at the site field office for duration of the Work.

C. Laboratory will fax material supplier, Contractor and Project Manager reports that indicate failing test results by no later than close of business on the working day following test completion and review.

1.06 LIMITS ON TESTING LABORATORY AUTHORITY

A. Laboratory may not release, revoke, alter, or enlarge requirements of the Contract.

B. Laboratory may not approve or accept any portion of the Work.

C. Laboratory may not assume Contractor duties.

D. Laboratory has no authority to stop the Work.

1.07 CONTRACTOR RESPONSIBILITIES

A. Provide safe access to the Work and to manufacturer's facilities for Project Manager and for testing laboratory personnel.

B. Provide testing laboratory with a copy of the Construction Schedule and a copy of each update to Construction Schedule.

C. Notify Project Manager and testing laboratory during normal working hours of the day previous to expected time for operations requiring inspection and testing services. When Contractor fails to make timely prior notification, do not proceed with the operations requiring inspection and testing services.

D. Notify Design Consultant 24 hours in advance when Specification requires presence of Design Consultant for sampling or testing.

E. Request and monitor testing as required to provide timely results and to avoid delays to the Work. Provide samples to laboratory in sufficient time to allow required test to be performed in accordance with specified test methods before intended use of the Product.

F. Cooperate with laboratory personnel in collecting samples on site. Provide incidental labor and facilities for safe access to the Work to be tested, to obtain and handle samples at site or at source of Products to be tested, and to facilitate tests and inspections including storage and curing of test samples.

G. Make arrangements with laboratory through Project Manager. Payment for additional testing will be made in accordance with Document 00700 - General Conditions:

1. Re-testing required for failed tests.

2. Re-testing for nonconforming work.

3. Additional sampling and tests requested beyond specified requirements.

4. Insufficient notification of cancellation of tests for work scheduled but not performed.

PART 2 P R O D U C T S - Not Used

PART 3 EXECUTION

3.01 CONDUCTING TESTING

A Conform to laboratory sampling and testing methods specified in individual Specification sections to the latest issues of ASTM standards, TxDOT methods, or other recognized test standards as approved by Project Manager.

B Requirements of this Section shall also apply to those tests for approval of materials, for mix designs, and for quality control of materials as performed by employed testing laboratories.

END OF SECTION

Section 01502

MOBILIZATION

PART 1 GENERAL

1.01 SECTION INCLUDES

A. Mobilization of construction equipment and facilities onto the site.

1.02 MEASUREMENT AND PAYMENT

A. Unit Price Contracts. If Contract is Unit Price Contract, measurement for mobilization is on a lump sum basis.

B. Stipulated Price (Lump Sum) Contract. If Contract is Stipulated Price Contract, payment for Work in this Section is included in total Stipulated Price.

C. Mobilization payments will be included in monthly payment estimates upon written application by Contractor subject to the following provisions:

1. Authorization for payment of 50 percent of that portion of Contract Price designated for mobilization will be made upon receipt and approval by Project Manager of the following items, as applicable:

   a. Safety Program (Document 00700, Paragraph 10.1.1).

   b. Site Utilization Plan (Section 01145).

   c. Schedule of Values (Section 01292), if any.

   d. Initial Construction Photographs (Section 01321), if needed.

   e. Preliminary Construction Schedule and Billing Forecast (Section 01325).

   f. Construction Schedule (Section 01325 or Section 01326, as applicable).

   g. Submittal Schedule (Section 01330).

   h. Site specific Storm Water Pollution Prevention Plan (SWPPP) and Notice of Intent (NOI) along with storm water application fee (Section 01410), if required.

   i. Contractor's Quality Control Plan (Section 01450), if required.

j. Establishment of a Field Office for Project Manager meeting requirements of Section 01520 - Temporary Field Office.

k. Traffic Control Plan (Section 01555), if required.

l. Plan for Control of Ground and Surface Water (Section 01578), if required.

m. Project Signs Submittal (Section 01580).

n. Trench Safety Program (Section 02260), if required.

o. Dewatering plan, when required.

2. Authorization for payment of the balance of that portion of Contract Price designated for mobilization will be made upon completion of the Work amounting to five percent of Original Contract Price. The amount of Contract Price designated for mobilization may not be applied in computing whether or not five percent of the Original Contract Price has been obtained.

3. Mobilization payments will be subject to retainage amounts stipulated in Document 00700 – General Conditions.

PART 2 P R O D U C T S -Not Used

PART 3 E X E C U T I O N -Not Used

END OF SECTION

Section 01504

TEMPORARY FACILITIES AND CONTROLS

PART 1 GENERAL

1.01 SECTION INCLUDES

A. Temporary facilities and necessary controls for the Project, including utilities, telephone, sanitary facilities, storage sheds and building, safety requirements, first aid equipment, fire protection, security measures, protection of the Work and property, access roads and parking, environmental controls, pest and rodent control and disposal of trash, debris and excavated material.

B. Facilities and controls specified in this section are considered minimum for the Project. Provide additional facilities and controls for proper execution of the Work and to meet Contractor's responsibilities for protection of persons and property.

1.02 MEASUREMENT AND PAYMENT

A. UNIT PRICES

1. No separate payment will be made for any temporary facilities and controls required under this section. Include cost of such work in contract price listed for mobilization.

1.03 CONTRACTOR'S RESPONSIBILITY

A. Comply with applicable requirements specified in other sections of Specifications.

1. Maintain and operate temporary facilities and systems to assure continuous service.

2. Modify and extend systems as the Work progress requires.

3. Completely remove temporary materials and equipment when no longer required.

4. Restore existing facilities used for temporary services to specified or original condition.

PART 2 PRODUCTS - NOT USED

PART 3 EXECUTION

3.01 TEMPORARY UTILITIES

A. Obtaining Temporary Service:

1. Make arrangements with utility service companies for temporary services.

2. Abide by rules and regulations of the utility service companies or authorities having jurisdiction.

3. Be responsible for utility service costs until Date of Substantial Completion. Included are fuel, power, light, heat, and other utility services necessary for execution, completion, testing, and initial operation of work.

B. Water:

1. Provide water required for and in connection with work to be performed and for specified tests of piping, equipment, devices, or for other use as required for proper completion of the Work.

2. Water to be drawn from public fire hydrants. Obtain transit meter from City of Houston, Department of Public Works and Engineering, Taps and Meters Section. Pay required deposit based on rates established by latest ordinance.

3. Provide and maintain an adequate supply of potable water for domestic consumption by Contractor personnel, Project Manager and representatives of the City.

C. Electricity and lighting:

1. Provide electric power service required for the Work including required testing, lighting, operation of equipment, and other Contractor use.

2. Electric power service includes temporary power or generators required to maintain plant operations during scheduled shutdowns.

3. Minimum lighting level shall be 10 foot-candles for open areas; 20-foot-candles for stairs and shops. Provide a minimum of one 300-watt lamp for each 200 square feet of work area.

D. Temporary Heat and Ventilation:

1. Provide temporary heat necessary for protection or completion of the Work.

2. Provide temporary heat and ventilation to assure safe working conditions; maintain enclosed areas at a minimum of 50 degrees F.

E. Telephone:

1. Provide emergency telephone service at Project site for use by Contractor personnel and others performing work or furnishing services at the site.

2. Provide Houston-Metro lines, allowing unlimited calls, without charge in Greater Houston Metropolitan area with "call waiting" and "call forwarding" options. Provide one telephone answering machine with beeperless remote message retrieval capability.

F. Sanitary Facilities:

1. Provide and maintain sanitary facilities for persons on the site; comply with regulations of State and local departments of health.

2. Enforce use of sanitary facilities by construction personnel at site. Enclose sanitary facilities. Pit-type toilets are not permitted. No discharge will be allowed from these facilities. Collect and store sewage and waste so as not to cause nuisance or health problems. Haul sewage and waste off-site and properly dispose in accordance with applicable regulations.

3. Locate toilets near the Work site and secluded from view insofar as possible. Keep toilets clean and supplied throughout the course of the Work.

3.02 STORAGE SHEDS AND BUILDINGS

A. Provide adequately ventilated, watertight storage facilities with floor above ground level for Products susceptible to weather damage.

B. Storage of Products not susceptible to weather damage may be on blocks off the ground.

C. Store Products in a neat and orderly manner. Place Products to permit easy access for identification, inspection and inventory.

D. Fill and grade site for temporary structures to provide drainage away from temporary and existing buildings.

3.03 SAFETY REQUIREMENTS

A. Submit a safety program at the pre-construction meeting and follow the program in accordance with Document 00700 – General Conditions. Include documented response to trench safety requirements of Section 02260 - Trench Safety System.

B. Conduct operations in strict accordance with applicable Federal, State and local safety codes and statutes and with good construction practice. Establish and maintain procedures for safety of all work, personnel and equipment involved in the Work.

C. Observe and comply with Texas Occupational Safety Act (Art. 5182a, V.C.S.) and with all safety and health standards promulgated by Secretary of Labor under Section 107 of Contract Work Hours and Standards Act, published in 29 CFR Part 1926 and adopted by Secretary of Labor as occupational safety and health standards under Williams-Steiger Occupational Safety and Health Act of 1970, and to other legislation enacted for safety and health of Contractor employees. Safety and health standards apply to Subcontractors and Suppliers as well as to the Contractor.

D. Observance of and compliance with safety regulations is Contractor's responsibility without reliance or superintendence of or direction by Project Manager. Immediately advise Project Manager of investigation or inspection by Federal Safety and Health inspectors of Contractor's or Subcontractor's work or place of work on site under the Contract, and after investigation or inspection, advise Project Manager of results. Submit one copy of accident reports to Project Manager within 10 days of occurrence.

E. Protect areas occupied by workmen using the best available devices for detection of lethal and combustible gases. Test devices frequently to assure functional capability. Constantly observe infiltration of liquids into the Work area for visual or odor evidence of contamination, and immediately take appropriate steps to seal off entry of contaminated liquids to the Work area.

F. Implement safety measures, including but not limited to safety personnel, first-aid equipment, ventilating equipment and other safety equipment specified or detailed on Drawings.

G. Maintain required coordination with City Police and Fire Departments during entire period covered by the Contract.

H. Include Project safety analysis in safety plan. Itemize major tasks and potential safety hazards. Plan to eliminate hazards or protect workers and public from each hazard.

3.04 FIRST AID EQUIPMENT

A. Provide a first aid kit throughout the construction period. List telephone numbers for physicians, hospitals, and ambulance services in each first aid kit.

B. Have at least one person thoroughly trained in first aid and CPR procedures present on the site when work is in progress. Contractor to conform to protocols and requirements for training and protection against "blood borne pathogens".

3.05 FIRE PROTECTION

A. Conform to specified fire protection and prevention requirements established by Federal, State, or local governmental agencies and as provided in Safety Program.

3.06 SECURITY MEASURES

A. Protect the Work, materials, equipment, and property from loss, theft, damage, or vandalism. Protect City property used in performance of the Contract.

B. If existing fencing or barriers are breached or removed for purposes of construction, provide and maintain temporary security fencing equal to existing.

3.07 PROTECTION OF UTILITIES AND PIPELINES

A. Prevent damage to existing public utilities during construction. Approximate locations of known utilities are shown on Drawings, but all lines may not be shown. Excavate with caution and repair lines damaged by construction operations.

B. Use the Utility Coordinating Committee One Call System, telephone number, (713) 223-4567, which must be called 48 hours in advance. The toll free telephone number is 1-800-669-8344, Texas One Call System.

C. Before excavating, locate underground utilities by appropriate means including the use of metal detection equipment, and probes, or by excavation or surveys. Repair damage caused by investigative work and by failure to locate or to preserve underground utilities.

D. Give utility owners a minimum five days notice before commencing excavation to allow time to locate utilities and make adjustments or

relocations when they conflict with the Work. Include cost for temporary relocation of water, wastewater, and storm drainage lines, necessary to accommodate construction, in unit prices for utility construction unless otherwise noted. Bypassing of sanitary waste to storm drainage facilities is not allowed.

E. Prior to excavation near pipelines, request a representative of the pipeline company to meet with Contractor and Project Manager at the site to discuss procedures to be used. Request pipeline company's representative to locate the pipelines in at least three locations: at each side and at centerline of proposed excavation of proposed utility. Also request representative and Project Manager to be present to observe Contractor operations when excavation is conducted within 15 feet of pipeline.

F. Utility service lines are not shown on the construction document drawings. Contractor should anticipate that such service lines exit and should exercise extreme caution during construction. The utility service lines should be repaired and restored immediately as per the specification, if damaged due to any construction activities. No separate payment will be made for this repair and restoration work. Include payment in unit price for work in appropriate sections.

G. Prior to abandonment of utility, make appropriate arrangements with City and owner of utility to terminate service, remove meters, tranformers, and poles as may be required by site conditions.

3.08 PROTECTION OF THE WORK AND PROPERTY

A. Preventive Actions

1. Take necessary precautions and actions to prevent damage, injury, or loss to the Work or public and private property, including:

   a. Storage of apparatus, supplies, and Products in an orderly, safe manner to limit interference with progress of the Work or work of other contractors, utility service companies, or the City's operations.

   b. Suitable storage for Products subject to damage by exposure to weather, theft, breakage, etc.

   c. Limitation of loading pressures imposed upon portions of the Work.

   d. Frequent clean up of refuse, scrap materials, and debris from construction operations, necessary to maintain the site in a safe and orderly condition.

e. Provision of barricades and guard rails to protect pedestrian and traffic around openings, scaffolding, temporary stairs and ramps, excavations, elevated walkways, and other hazardous areas.

2. Protect public and private property adjacent to the site. Obtain written consent before entering or occupying privately-owned land except on easements provided for construction. Restore property damaged by construction operations to condition equal to or better than that existing before the damage.

B. Barricades and Warning Systems

1. Where work is performed on or adjacent to roadways, rights-of-ways, or public land, provide barricades, fences, lights, warning signs, danger signals, and other precautionary measures necessary for protection of persons or property and for protection of the Work.

a. Erect sufficient barricades to keep vehicles and pedestrians from entering the Work. Paint barricades to be visible at night. From sunset to sunrise, provide at least one light at each barricade.

b. Maintain barricades, signs, lights, and provide watchmen until Project Manager approves removal. Whenever work creates encroachment onto public roadways, station flagmen to manage traffic flow in accordance with approved traffic control plan.

c. Conform to requirements of section 01555 – Traffic Control and regulation.

C. PROTECTION OF EXISTING STRUCTURES

1. Underground Facilities

a. Known Underground Facilities are shown on the Drawings but all Facilities may not be shown. Explore sufficiently ahead of trenching and excavation work to locate Underground Facilities in order to prevent damage to them and to prevent interruption of utility services. Restore damage to Underground Facilities to original condition at no additional cost to the City.

b. If necessary to avoid unanticipated Underground Facilities, Project Manager may make changes in location of the Work.

c. If permanent relocation of an Underground Facility is required

and not provided for in the Contract documents, City Engineer will direct Contractor in writing to perform the Work under Modification provisions in Document 00700 - General Conditions.

2. Surface Structures include buildings, tanks, walls, bridges, roads, dams, channels, open drainage, piping, poles, wires, posts, signs, markers, curbs, walks, guard cables, fencing, and other facilities that are visible above the ground level.

3. Protection of Underground Facilities and Surface Structures:

   a. Support in place and protect Underground Facilities and Surface Structures located within or adjacent to the limits of the Work from damage. Install supports as required by the owner of the structure. Satisfy Project Manager that the owner of the facility or structure has approved methods and procedures before installing structure supports.

   b. Avoid moving or changing public utility or private corporation property without prior written consent of a responsible official of the facility or structure. Allow representatives of utilities to enter the construction site for maintenance and repair purposes or to make necessary changes.

   c. Notify utility and pipeline owners and operators of the nature of construction operations and dates when operations will be performed. When construction operations are required in immediate vicinity of existing structures, pipelines, or utilities, give a minimum of five working days advance notice. Probe and flag location of Underground Facilities prior to commencement of excavation. Keep flags in place until construction operations uncover the facility.

   d. Assume risk for damages and expenses to Underground Facilities and Surface Structures within or adjacent to the Work.

D. Employ a structural engineer to ensure protection measures are adequate for the safety and integrity of structures and facilities.

E. PROTECTION OF INSTALLED PRODUCTS:

1. Provide protection of Installed Products to prevent damage from subsequent operations. Remove protection facilities when no longer needed, prior to completion of the Work.

2. Control traffic to prevent damage to Products and surfaces.

3. Provide coverings to protect Products from damage. Cover projections, wall corners, jambs, sills, and exposed sides of openings in areas used for traffic and passage of materials in subsequent work.

3.09 ROADS AND PARKING

A. Prevent interference with traffic and operations of the City on existing roads.

B. Designate temporary parking areas to accommodate construction and City personnel. When site space is not adequate, provide additional off-site parking. Locate as approved by Project Manager.

C. Minimize use by construction traffic on existing streets and driveways.

D. Do not allow heavy vehicles or construction equipment in existing parking areas.

3.10 ENVIRONMENTAL CONTROLS

A. Use methods, equipment, and temporary construction necessary for control of environmental conditions at the site and adjacent areas.

B. Comply with statutes, regulations, and ordinances relating to prevention of environmental pollution and preservation of natural resources including National Environmental Policy Act of 1969, PL 91-190, Executive Order 11514.

C. Minimize impact to the surrounding environment. Do not use construction procedures that cause unnecessary excavation and filling of terrain, indiscriminate destruction of vegetation, air or stream pollution, or harassment or destruction of wildlife.

D. Limit disturbed areas to boundaries established by the Contract. Do not pollute on-site streams, sewers, wells, or other water sources.

E. Do not burn rubbish, debris or waste materials.

3.11 POLLUTION CONTROL

A. Provide methods, means, and facilities necessary to prevent contamination of soil, water or the atmosphere by discharge of Pollutants from construction operations.

B. Provide equipment and personnel to perform emergency measures to contain spillage, and to remove contaminated soils or liquids. Excavate and dispose of contaminated earth off-site in accordance with laws and regulations, and

replace with suitable compacted fill and topsoil.

C. Provide systems necessary for control of Pollutants.

1. Prevent toxic concentrations of chemicals.

2. Prevent harmful dispersal of Pollutants into the environment.

D. Use equipment that conforms to current Federal, State, and local laws and regulations.

3.12 PEST AND RODENT CONTROL

A. Provide rodent and pest control as necessary to prevent infestation of construction or storage areas.

B. Employ methods and use materials that will not adversely affect conditions at site or on adjoining properties.

3.13 NOISE CONTROL

A. Provide vehicles, equipment, and use construction activities that minimize noise to the greatest degree practicable. Conform to noise levels of Chapter 30 –Noise and Sound Level Regulation, City Code of Ordinances, and latest OSHA standards. Do not permit noise levels to interfere with the Work or create a nuisance to surrounding areas.

B. Conduct construction operations during daylight hours except as approved by Project Manager.

C. Select construction equipment that operates with minimum noise and vibration. When directed by Project Manager, correct objectionable noise or vibration produced by operation of equipment at no additional cost to the City. Sound Power Level (PWL) of equipment shall not exceed 85 dbA (re: 10^{-12} watts) measured five feet from the equipment, or at a lower level if prescribed by City Ordinances. Equipment noise requirements are contained in equipment specifications.

3.14 DUST CONTROL

A. Use water or other methods approved by Project Manager to control amount of dust generated by vehicle and equipment operations.

3.15 WATER RUNOFF AND EROSION CONTROL

A. Comply with requirements of section 01410 – TPDES Requirements.

B. Conduct fill, grading and ditching operations and provide adequate methods necessary to control surface water, runoff, subsurface water, and water from excavations and structures in order to prevent damage to the Work, the site, or adjoining properties.

1. Plan and execute construction and earthwork by methods that control surface drainage from cuts and fills, and from borrow and waste disposal areas.

2. Minimize area of bare soil exposed at one time.

3. Provide temporary control measures, such as berms, dikes, and drains.

4. Provide, operate, and maintain equipment and facilities of adequate size to control surface water.

5. Construct fill and waste areas by selective placement of materials to eliminate erosion of surface silts or clays that may erode.

6. Direct water away from excavations, pits, tunnels, and other construction areas to prevent erosion, sedimentation or damage.

7. Maintain existing drainage patterns adjacent to the site by constructing temporary earth berms, sedimentation basins, retaining areas, and temporary ground cover.

8. Dispose of drainage water in a manner to prevent flooding, erosion, or other damage to the site or adjoining areas, in conformance with environmental requirements.

9. Inspect earthwork periodically to detect any evidence of erosion. Take corrective measures as required to control erosion.

END OF SECTION

Section 01520

TEMPORARY FIELD OFFICE

PART 1 GENERAL

1.01 SECTION INCLUDES

A Temporary field office building and associated parking area.

1.02 FACILITY DESCRIPTION

A Temporary field office to be utilized by authorized representatives of the City to coordinate and monitor daily construction activities performed by Contractor.

B. Field office shall be a non-smoking facility.

PART 2 PRODUCTS

2.01 FIELD OFFICE

A General:

1. Locate office in vicinity of the Work at a location approved by Project Manager or where indicated on Drawings.

2. Furnish, Install and maintain field office for exclusive use of authorized representatives of the City. Provide sufficient room for Project meetings and Inspector's office.

3. Provide office within 10 days of Date of Commencement of the Work.

4. Construct two all-weather, hard surfaced parking spaces for exclusive use of authorized representatives of the City. Provide all-weather surfaced walk between parking spaces and field office.

B. Minimum Construction:

1 Structurally sound foundation and superstructure.

Weather tight with insulated roof, walls and 7-foot ceiling (minimum).

3. Stairs or walkway with handrail and covered entrance platform (minimum 4 feet by 4 feet) with mud scraper at door.

4. Resilient floor covering.

5. Screened windows with area equal to approximately 10 percent of floor area sufficient for light, view of the site, and ventilation. Provide each window with operable sash and burglar bars.

6. Secure exterior doors with dead-bolt cylinder locks and burglar bars.

C. Minimum Services:

1. Exterior entrance light.

2. Interior lighting of 75 foot-candles minimum at desktop height

3. Automatic heating to maintain 65 degrees F in winter.

4. Automatic cooling to maintain 75 degrees F in summer.

5. Electric power service.

6. Three telephone service lines one for voice, one for data, and one for fax, for exclusive use of authorized representatives of the City.

7. Sanitary facilities in field office with one water closet, one lavatory, and one medicine cabinet for exclusive use of authorized representatives of the City.

D. Minimum Furnishings:

1. One 5-drawer desk

2. Two swivel desk chairs with casters.

3. One plan table.

4. One drawing plan rack.

5. One 4-drawer legal file cabinet complete with fifty legal-size hanging folders and two full-sized carriers.

6. One marker board with cleaner and markers.

7. Two waste baskets.

8. One 30-inch by 36-inch tack board.

9. One all-purpose fire extinguisher.

10. Six protective helmets (hard hats) with ratchet adjustment for exclusive use of authorized representatives of the City.

11. Conference table and chairs to accommodate 10 persons.

12. All in one printer, copier, plain paper fax machine.

13. Telephone instrument separate from fax machine.

E. Provide adequate space for one set of Contract documents for ready reference.

PART 3 EXECUTION

3.01 MAINTENANCE

A Maintain all-weather surface driveway and parking areas, buildings, walkways, stairs and required furnishings and equipment for duration of the Contract.

B. Provide janitorial services for duration of the Contract consisting of twice weekly sweeping and mopping floors, trash removal, weekly restroom cleaning, and weekly dusting of furniture and equipment.

C. Provide soap, paper towels, toilet paper, cleansers and other necessary consumables.

D. Immediately repair damage, leaks or defective service.

3.02 PROJECT CLOSEOUT

A Remove temporary field office and signs and restore site as specified in Section 01770 - Closeout Procedures.

END OF SECTION

SECTION 01554

TRAFFIC CONTROL AND STREET SIGNS

PART 1 GENERAL

1.01 SECTION INCLUDES

A. Materials, hardware and installation of Traffic Signs.

1.02 SUBMITTALS

A. Contractor shall submit a list of intended suppliers and products to be used for all signs, posts, and associated hardware. City reserves the right to request actual product samples prior to approval.

1.03 MEASUREMENT AND PAYMENT

A. Signs installed or replaced will be measured by the each sign. Signs refurbished will be measured by each sign.

B. Payment for installation of traffic signs will be on the basis of each sign installed.

C. The price is full compensation for furnishing and installing new signs and hardware. Cost of associated posts, footings, and miscellaneous mounting hardware will not be paid for directly but is to be included in the unit price bid for installation of each traffic sign.

D. Non-standard signs installed or replaced will be measured by the square foot of the sign face. Non-standard signs shall not be installed without prior approval from the City.

PART 2 PRODUCTS

2.01 MATERIALS

A. The following ASTM Standards and documents, of the issue in effect on the date of Invitation for Bid, form a part of this specification to the extent herein.

1. ASTM B 209 Specification for Aluminum and Aluminum Alloy Sheet and Plate

2. ASTM D 523 Standard Method for Test for Specular Gloss

3. ASTM D 4956 Standard Specification for Retroreflective Sheeting for Traffic Control

4. ASTM E 284 Standard Definition of Terms Relating to Appearance of Materials

5. ASTM E 308 Computing the Colors of Objects by Using the CIE System

6. ASTM E 810 Standard Test Method for Coefficient of Retroreflection of Retroreflective Sheeting

7. ASTM E 1164 Standard Practice for Obtaining Spectrophotometric Data for Object-Color Evaluation

B. Substrate (Sign Blanks). This shall be aluminum alloy 5052-H38 and otherwise in conformance with ASTM B-209 and have gold chromate finish. The size, shape and thickness of the sign blanks are as indicated on the standard detail sheet in the plans or as specified by the Engineer.

1. Metal working. The aluminum shall be free of burrs and pits on both sides, including
edges and holes, and shall be made ready for applications of the sheeting.

2. Surface Preparation. The aluminum shall be thoroughly cleaned and degreased with solvent and alkaline emulsions cleaner by immersion, spray, or vapor degreasing and dried prior to application of the gold chromate sheeting coat. The aluminum shall be new and corrosion-free with holes drilled or punched, corners rounded to the radii shown in the standard detail sheet, and all edges smoothed prior to application of sheeting. The heavy or medium chromate coating shall conform in color and corrosion resistance to that imparted by the Alodine 1200F treatment.

3. Size. The dimensions of substrate applications for regulatory, warning, and guide signs shall be as specified by the Engineer and as shown on the plans.

C. Sign Face (Background, Legends, Symbols, and Colors). These shall be in accordance with the Standard Highway Sign Designs (SHSD) for Texas and with the Texas Manual of Uniform Traffic Control Devices (TMUTCD).

1. The sign face, made of electronic film and retro-reflective sheeting shall comply with the appearance, specification, and good workmanship designated by the using agency for sign faces constructed of screen processed retro-reflective sheeting of the same type.

2. All sign blanks shall be covered with appropriate retro-reflective sheeting.

   a. All ground mounted stop signs, warning signs, and other regulatory signs, shall use at a minimum High Intensity Prismatic Reflective Sheeting.

   b. All overhead signs shall use Diamond Grade Reflective Sheeting.

   c. All other signs shall use Super Engineer Grade Sheeting

3. Application Methods. The method of application of sheeting, letters, numbers, and symbols shall be precisely as prescribed in writing by the manufacturer.

   a. Legend Spacing and Layout. Spacing and layout for all traffic control signs shall conform to the SHSD.

   b. Tolerance for Horizontal Alignment. Letters, numerals, and symbols shall be horizontally aligned to a tolerance of 1/16 inch.

   c. Tolerance for Vertical Alignment. Letters, numerals, and symbols shall be vertically aligned to a tolerance of 1/16 on each letter in each line.

D. Sign Posts. Steel post shall conform to the standard specification for hot rolled carbon sheet steel, structural quality, ASTM designation A570, Grade 50. Average minimum yield strength after cold forming is 60,000 psi. The cross section of the post shall be square tube formed steel, carefully rolled to size and shall be welded directly in the corner by high frequency resistance welding or equivalent process and externally scarified to agree with corner radii. Sign posts shall be hot dipped galvanized conforming to ASTM A653, G90.

1. Installation. The square end of the post shall not be modified or pointed.

   a. Flange. When sign post installation is required over building basements, bridges and cavities, a galvanized cast iron pipe flange shall be used. The base shall be 8 inches in diameter with six 5/16 inch holes drilled equidistant around the circumference, ⅝ inch from the outer edge. The neck of the flange shall be 3inches in diameter, drilled and threaded to receive a 2 inch diameter galvanized post.

   b. Hardware. All ground mounted signs shall be attached to posts using 5/16" nut and bolt assembly, the bolt being 2 ½" in length. Stainless steel banding material, brackets and clips will be used for signs installed on light standards or mast arms.

c. Construction. Anchors shall be anchored in a minimum of one cubic foot of class "C" concrete, 28 inches deep, with a 6 inch long, ⅜ inch diameter pin inserted through the pre-drilled hole 3 inches from the bottom of the pole. Where the pole installation requires surface mounting, an 8 inch flange with a 2 inch threaded collar shall be used. The pole shall be galvanized, two inches in diameter and threaded to fit the flange. Sign placement and orientation shall be as specified in the construction plans.

E. Each finished sign shall have the following sticker affixed to the back in a location where it will be visible when the sign is installed:

CITY OF HOUSTON

VERNON CIVIL STATUTES
ART 6701d / ARTICLE III, SEC. 37
Unlawful to Deface, Remove, Knockdown, or Alter Any Traffic Control Device
MAXIMUM FINE $200.00
Date of Sign Manufacture: 00/04
Sheeting Manufacturer: XYZ, Inc.
Sheeting Lot No.: 12345-678

The sticker shall be Zebra Technologies Z-Ultimate 3000 White or approved equal. Finished product shall be weather and fade resistant for the expected life of the sign.

F. Warranty. The Contractor shall warrant the materials and workmanship of each sign in accordance with the maximum limits of material warranties extended by manufacturers of raw materials, subject to the conditions they specify. The retro-reflective sheeting will be considered unsatisfactory if it has deteriorated due to natural causes to the extent that: (1) the sign is ineffective for its intended purpose when viewed from a moving vehicle under normal day and night driving conditions; or (2) the coefficient of retro-reflection is less than the minimum specified for that sheeting. When sign failure occurs prior to the minimum years indicated and an inspection demonstrates that the failure is caused by materials warranted to contractor to endure at least that long, the sign will be replaced or repaired free of materials charges. When failure occurs and inspection demonstrates that such failure is due to poor workmanship, the sign will be replaced or repaired at Contractor's expense, including shipping charges.

PART 3 EXECUTION

3.01.1 EQUIPMENT

A. The contractor shall provide machinery, tools, and equipment necessary for proper execution of the work.

3.01.2 CONSTRUCTION

A. Construction shall be high quality with no visible defects in the finished product. Fabrication shall be in accordance with these specifications. Street name signs shall always be supplied and installed at each project intersection whether signs previously existed at the location or not.

B. The removal of existing signs shall be coordinated with the Traffic Operations Section of the Public Works Department (713-803-3054) and arrangements made for a convenient time to deliver City signs and poles. All salvaged traffic signs shall be delivered to the Traffic Operations Center located at 2200 Patterson Street. All deliveries to the Traffic Operations Center requires a minimum notice of two (2) working days prior to returning or delivering any sign and/or sign related material.

3.03 RESPONSIBILITIES

A. The contractor is responsible for providing and supplying aluminum traffic signs covered with retro-reflective sheeting, applying standard legends (or special legends if shown in the plans) to the covered sign blanks, galvanized steel sign poles, pole anchors, all hardware for installing the signs and poles, and for installing traffic signs, poles and anchors as shown in the plans or call for in the contract documents, complete and ready for field installations.

END OF SECTION

Section 01555

TRAFFIC CONTROL AND REGULATION

PART 1 GENERAL

1.01 SECTION INCLUDES

A. Requirements for signs, signals, control devices, traffic barriers, flares, lights and traffic signals; construction parking control, designated haul routes, and bridging of trenches and excavations.

B. Qualifications and requirements for use of flagmen.

1.02 MEASUREMENT AND PAYMENT

A. Unit Price Contracts.

1. Traffic control and regulation. Payment for traffic control and regulation is on a lump sum basis. Include preparation and submittal of traffic control plan if different than shown on Drawings, and provision of traffic control devices, equipment, and personnel necessary to protect the Work and public. Payment will be based on Contractor's Schedule of Values for traffic control and regulation.

2. Payment for traffic control will be authorized by Project Manager in three (3) parts. Partial payment will be made according to following schedule:

   a. Payment of 25 percent of traffic control amount will be authorized when permanent control devices and necessary temporary markings, sufficiently deployed along job site as required to maintain progress of work, are installed at job site and approved. This limiting percentage will be prorated based upon extent of Contractor's setup.

   b. A payment of 50 percent of traffic control amount will be authorized when pavement replacement commences. This limiting percentage will be prorated based upon linear footage, as measured along centerline axis of water main, of pavement replaced.

   c. A payment of 25 percent of traffic control amount will be authorized when permanent pavement markings are restored and all unnecessary permanent and temporary control devices removed. This limiting percentage will be prorated based upon the extent of restoration.

3. Flagmen: Measurement is on a lump sum basis for flagmen as required for the project. The amount invoiced shall be determined based on the schedule of value submitted for flagmen.

4. New Portable Concrete Low Profile Traffic Barrier Provided. Payment is on a unit price basis for each linear foot of low profile traffic barrier provided, installed with hardware assemblies and connected together in accordance with the approved traffic control plan.

5. Portable Concrete Low Profile Traffic Barrier picked up from City of Houston Stockpile. Payment is on a unit price basis for each linear foot of low profile traffic barrier picked up from designated stockpile, moved onto the project, set at location and connected together.

6. Portable Concrete Low Profile Traffic Barrier Installed. Payment is on a unit price basis for each linear foot of low profile traffic barrier delivered to the project location, installed with hardware assemblies and connected together in accordance with the approved traffic control plan.

7. Portable Concrete Low Profile Traffic Barrier Moved and Reset. Payment is on a unit price basis for each linear foot of low profile traffic barrier disassembled, moved on the project, reset at the new locations and connected together. Include cost to repair roadway in the unit price.

8. Portable Concrete Low Profile Traffic Barrier Removed. Payment is on a unit price basis for each linear foot of low profile traffic barrier removed from the project, including hardware assemblies, and stockpiling at location listed in Section 01110 – Summary of Work. Include cost to repair roadway in the unit price.

9. Refer to Section 01270 - Measurement and Payment for unit price procedures.

B. Stipulated Price Contracts. Include payment for work under this section in the total Stipulated Price.

1.03 REFERENCES

A. Texas Manual on Uniform Traffic Control Devices (TMUTCD)

B. Article 4413 (29bb), commonly referred to as Private Investigators and Private Security Agencies Act, and Article 2.12, Texas Code of Criminal Procedure.

C. Code of Ordinances, City of Houston, Texas.

1. Chapter 10 Buildings And Neighborhood Protection, Article X Cleanup After Demolition Or Removal Of Structures

2. Chapter 40 Streets and Sidewalks, Article XVII Pedestrian Way Impairments

1.04 SUBMITTALS

A. Conform to requirements of Section 01330 - Submittal Procedures.

B. Traffic control plan:

1. If using traffic control plan contained in the Contract without modification, submit a letter confirming use of the plan.

2. If using a different traffic control plan, submit the plan for approval. The plan must conform to TMUTCD requirements and be sealed by a Registered Texas Professional Engineer.

C. Submit copies of approved lane closure permits issued by City Traffic Engineering Branch.

D. Submit Schedules of Values for traffic control plan and flagmen within 30 days following Notice to Proceed.

E. Submit records verifying qualifications of Uniformed Peace Officers and Certified Flagmen proposed for use on the Work.

F. When working in the central business district, submit copies of approved Pedestrian Way permits issued by the City's Traffic Engineering Branch.

1.05 FLAGMEN

A. Use Uniformed Peace Officers and Certified Flagmen to control movement of vehicular and pedestrian traffic when construction operations encroach on public traffic lanes. Unless otherwise approved by Project Manager, use Uniformed Peace Officer for work along major thoroughfares, schools, churches, hospitals and Work at signalized intersections.

B. Uniformed Peace Officer: Individual employed full-time as a peace officer who receives separate compensation as a privately employed flagman. Private employment may be an employee-employer relationship or on an individual basis. Flagman may not be in the employ of another peace officer nor be a reserve peace officer.

1. Uniformed Peace Officers may be:

   a. sheriffs and their deputies;

   b. constables and deputy constables;

   c. marshals or police officers of an incorporated city, town or village; or

   d. as otherwise provided by Article 2.12, Code of Criminal Procedure.

2. The Uniformed Peace Officer must be a full-time peace officer, must work a minimum average of 32 paid hours per week, and must be paid a rate not less than the prevailing minimum hourly wage rate set by the federal Wage and Hour Act. The individual must be entitled to vacation, holidays, and insurance and retirement benefits.

C. Certified Flagman: Individual who receives compensation as a flagman and meets the following qualifications:

1. Formally trained and certified in traffic control procedures by the City s E. B. Cape Center.

2. Speaks English. Ability to speak Spanish is desirable but not required.

3. Paid for flagman duty at an hourly rate not less than the wage rate set for Rough Carpenter under the City's Wage Scale for Engineering Construction.

D. Certified Flagmen must wear a distinctive uniform, bright-colored vest, and be equipped with appropriate flagging and communication devices while at the Work site. They must also have in their possession while on duty, a proof of training identification card issued by the appropriate training institute.

PART 2 PRODUCTS

2.01 SIGNS, SIGNALS, AND DEVICES

A. Comply with TMUTCD requirements.

B. Traffic cones and drums, flares and lights: Conform to local jurisdictions' requirements.

C. When working in the Central business district, provide pedestrian pathway

signage approved by the City's Traffic Engineering Branch.

2.02 PORTABLE LOW PROFILE CONCRETE BARRIERS

A. The low profile concrete barrier is a patented design. Information concerning this barrier may be obtained from Texas Transportation Institute, Texas A&M University System, College Station, Texas 77843-3135, (409) 845-1712.

PART 3 E X E C U T I O N

3.01 PUBLIC ROADS

A. Submit requests forms for lane closure and sidewalk closure to the City's Traffic Engineering Branch at least three working days prior to need for blocking vehicular lanes or sidewalks. Do not block lanes or sidewalks without approved permits. Obtain application from the City's Traffic Engineering Branch at 611 Walker, 5th floor or at the following internet address: http://www.ci.houston.tx.us/pwe/mrow/laneclosure.htm.

B. Follow laws and regulations of governing jurisdictions when using public roads. Pay for and obtain permits from jurisdiction before impeding traffic or closing lanes. Coordinate activities with Project Manager.

C. Give Project Manager one-week notice before implementing approved traffic control phases. Inform local businesses of impending traffic control activities.

D. Notified police department, fire department, METRO, and local schools, churches, and businesses in writing a minimum of five business days prior to beginning work.

E. Maintain 10-foot wide all-weather lanes adjacent to the Work for emergency vehicle use. Keep all-weather lanes free of construction equipment and debris.

F. Do not to obstruct normal flow of traffic from 7:00 a.m. to 9:00 a.m. and 4:00 p.m. to 6:00 p.m. on designated major arterials or as directed by Project Manager.

G. Maintain local driveway access to residential and commercial properties adjacent to work areas at all times. Use all-weather materials approved by Project Manager to maintain temporary driveway access to commercial and residential driveways.

H. Keep streets entering and leaving job site free of excavated material, debris, and foreign material resulting from construction operations in compliance with

applicable ordinances.

I. Remove existing signage and striping that conflict with construction activities or that may cause driver confusion.

J. Provide safe access for pedestrians along major cross streets.

K. Alternate closures of cross streets so that two adjacent cross streets are not closed simultaneously.

L. Do not close more than two consecutive esplanade openings at a time without prior approval from Project Manager.

3.02 CONSTRUCTION PARKING CONTROL

A. Control vehicular parking to prevent interference with public traffic and parking, access by emergency vehicles, and the City's operations.

B. Monitor parking of construction personnel's vehicles in existing facilities. Maintain vehicular access to and through parking areas.

C. Prevent parking on or adjacent to access roads or in non-designated areas.

3.03 FLARES AND LIGHTS

A. Provide flares and lights during hours of low visibility to delineate traffic lanes and to guide traffic.

3.04 HAUL ROUTS

A. Utilize haul routes designated by authorities or shown on drawings for construction traffic.

B. Confine construction traffic to designated haul routes.

C. Provide traffic control at critical areas of haul routes to regulate traffic and minimize interference with public traffic.

3.05 TRAFFIC SIGNS AND SIGNALS

A. Construct necessary traffic control devices for temporary signals required to complete the Work including loop detectors, traffic signal conduits, traffic signal wiring and crosswalk signals. Notify the City's Traffic Engineering Branch a minimum of 60 days in advance of need for control boxes and switchgear. The City will perform necessary service, programming or adjustments, to signal boxes and switchgear if required during construction.

B. Install and operate traffic control signals to direct and maintain orderly traffic flow in areas under Contractor's control affected by Contractor's operations. Post notices, signs and traffic controls before moving into next phase of traffic control.

C. Relocate traffic signs and signals as the Work progresses to maintain effective traffic control.

D. Unless otherwise approved by Project Manager, provide driveway signs with name of business that can be accessed from each crossover. Use two signs for each crossover.

E. Replace existing traffic control devices in Project area.

F. Project Manager may direct Contractor to make minor adjustments to traffic control signage to eliminate driver confusion and maintain orderly traffic flow during construction at no additional cost to the City.

3.06 BRIDGING TRENCHES AND EXCAVATIONS

A. When necessary, construct bridges over trenches and excavation to permit an unobstructed flow of traffic across construction areas and major drives. Use steel plates of sufficient thickness to support H-20 loading and install to operate with minimum noise.

B. Shore trench or excavation to support bridge and traffic.

C. Secure bridging against displacement with adjustable cleats, angles, bolts or other devices when:

1. bridging is placed over existing bus routes,

2. more than five percent of daily traffic is comprised of commercial or truck traffic,

3. more than two separate plates are used for bridging, and

4. when bridge is to be used for more than five consecutive days.

D. Extend steel plates used for bridging a minimum of 1 foot beyond edges of trench or excavation. Use temporary paving materials such as premix to feather edges of plates to minimize wheel impact on secured bridging.

3.07 REMOVAL

A. Remove equipment and devices when no longer required.

B. Repair damage caused by installation.

C. Remove post settings to a depth of 2 feet.

3.08 TRAFFIC CONTROL, REGULATION AND DIRECTION

A. Use Flagmen to control, regulate and direct an even flow and movement of vehicular and pedestrian traffic, for periods of time as may be required to provide for public safety and convenience, where:

1. multi-lane vehicular traffic must be diverted into single lane vehicular traffic,

2. vehicular traffic must change lanes abruptly,

3. construction equipment must enter or cross vehicular traffic lanes and walks,

4. construction equipment may intermittently encroach on vehicular traffic lanes and unprotected walks and crosswalk,

5. traffic regulation is needed due to rerouting of vehicular traffic around the Work site, and

6. where construction activities might affect public safety and convenience.

B. Use of Flagmen to assist in the regulation of traffic flow and movement does not relieve Contractor of responsibility to take other means necessary to protect the Work and public.

3.09 INSTALLATION STANDARDS

A. Place temporary pavement for single lane closures, in accordance with TMUTCD.

B. Reinstall temporary and permanent pavement markings as approved by Project Manager. When weather conditions do not allow application according to manufacturer's requirements, alternate markings may be considered. Submit proposed alternate to Project Manager for approval prior to installation. No additional payment will be made for use of alternate markings.

3.10 MAINTENANCE OF EQUIPMENT AND MATERIAL

A. Submit name, address and telephone number of individual designated to be

responsible for maintenance of traffic handling at construction site to Project Manager. Individual must be accessible at all times to immediately correct deficiencies in equipment and materials used to handle traffic including missing, damaged, or obscured signs, drums, barricades, or pavement markings.

B. Inspect signs, barricades, drums, lamps and temporary pavement markings daily to verify that they are visible, in good working order, and conform with traffic handling plans as approved by Project Manager. Immediately repair, clean, relocate, realign, or replace equipment or materials that are not in compliance.

C. Keep equipment and materials, signs and pavement markings, clean and free of dust, dirt, grime, oil, mud, or debris.

D. Obtain approval of Project Manager to reuse damaged or vandalized signs, drums, and barricades.

END OF SECTION

Section 01570

STORM WATER POLLUTION PREVENTION CONTROL

PART 1 GENERAL

1.01 SECTION INCLUDES

A. Implementation of Storm Water Pollution Prevention Plans (SWP3) described in Section 01410 – TPDES Requirement.

B. Installation, maintenance and removal, of storm water pollution prevention structures: diversion dikes, interceptor dikes, diversion swales, interceptor swales, down spout extenders, pipe slope drains, paved flumes and level spreaders. Structures are used during construction and prior to final development of the site.

C. Filter Fabric Barriers:

1. Type 1: Temporary filter fabric barrier for erosion and sediment control in non-channelized flow areas.

2. Type 2: Temporary reinforced filter fabric barrier for erosion and sediment control in channelized flow areas.

D. Hay Bale Fence.

E. Drop Inlet Basket

F. Inlet Sediment Traps

G. Brush Berm

H. Sand Bag Barrier

I. Bagged Gravel Barrier

J. Sediment Basin

K. Inlet Protection Barrier

1.02 MEASUREMENT AND PAYMENT

A. UNIT PRICES

1. Payment for filter fabric barrier is on a linear foot basis measured between limits of beginning and ending of stakes.

2. Payment for reinforced filter fabric barrier is on a linear foot basis measured between limits of beginning and ending of stakes.

3. Payment for drop inlet baskets is on a unit price basis for each drop inlet basket.

4. Payment for storm inlet sediment traps is on a unit price basis for each storm inlet sediment trap.

5. Payment for storm water pollution prevention structures is on a lump sum basis for the project. Earthen structures with outlet and piping include diversion dikes, interceptor dikes, diversion swales, interceptor swales, and excavated earth-outlet sediment trap, embankment earth-outlet sediment trap, down spout extenders, pipe slope drains, paved flumes, stone outlet sediment trap, and level spreaders.

6. Payment for hay bale barrier, if included in Document 00410 - Bid Form, is on a linear foot of accepted bale barriers, if not include in cost of storm water pollution prevention structures.

7. Payment for brush berm, if included in Document 00410 - Bid Form, is on a linear foot of accepted brush berm, if not include in cost of storm water pollution prevention structures.

8. Payment for sandbag barrier, if included in Document 00410 - Bid Form, is on a linear foot basis measured between limits of beginning and ending of sandbags, if not include in cost of storm water pollution prevention structures.

9. Payment for bagged gravel barrier, if included in Document 00410 - Bid Form, is on a linear foot basis measured between limits of beginning and ending of bagged gravel barrier, if not include in cost of storm water pollution prevention controls.

10. Payment for inlet protection barriers, if included in Document 00410 - Bid Form, is on a linear foot basis measured along outside face of inlet protection barrier, if not include in cost of storm water pollution prevention structures.

11. Refer to Section 01270 - Measurement and Payment for unit price procedures.

B. Stipulated Price (Lump Sum) Contract. If Contract is Stipulated Price Contract, payment for Work in this Section is included in total Stipulated

1.03 REFERENCE STANDARDS

A. ASTM

1. A 36 – Standard Specification for Carbon Structural Steel.

2. D698 – Standard Test Methods for Laboratory Compaction Characteristics of Soil Using Standard Effort (12,400 ft-lbf/ft3 (600kN-m/m3)).

3. D3786 – Standard Test Method for Hydraulic Bursting Strength for knitted Goods and Nonwoven Fabrics.

4. D 4355 - Standard Test Method for Deterioration of Geotextiles from Exposure to Ultraviolet Light and Water (Xenon-Arc Type Apparatus).

5. D 4491 - Standard Test Methods for Water Permeability of Geotextiles by Permittivity.

6. D 4632 - Standard Test Method for Grab Breaking Load and Elongation of Geotextiles.

7. D 4833 - Standard Test Method for Index Puncture Resistance of Geotextiles, Geomembranes, and Related Products.

8. D 6382 - Standard Practice for Dynamic Mechanical Analysis and Thermogravimetry of Roofing and Waterproofing Membrane Material.

B. Storm Water Management Handbook for Construction Activities prepared by City of Houston, Harris County and Harris County Flood Control District.

1.04 SYSTEM DESCRIPTIONS

A. Filter Fabric Barrier Type 1 and Type 2: Install to allow surface or channel runoff percolation through fabric in sheet-flow manner and to retain and accumulate sediment. Maintain Filter Fabric Barriers to remain in proper position and configuration at all times.

B. Hay Bale Fence: Install to allow surface runoff percolation through hay in sheet-flow manner and to retain and accumulate sediment. Maintain Hay Bale Fence to remain in proper position and configuration at all times.

C. Interceptor Dikes and Swales: Construct to direct surface or channel runoff around the project area or runoff from project area into sediment traps.

D. Drop Inlet Baskets: Install to allow runoff percolation through the basket and to retain and accumulate sediment. Clean accumulation of sediment to prevent clogging and backups.

E. Sediment Traps: Construct to pool surface runoff from construction area to allow sediment to settle onto the bottom of trap.

F. Sand Bags: Are used during construction activities in unstabilized minor swales, ditches, or streambeds when the contributing drainage area is no greater than 2 acres. It is also sediment barrier for stage one Inlet.

G. Bagged Gravel Barrier: Are used during construction activities in unstabilized minor swales, ditches, or streambeds when the contributing drainage area is no greater than 2 acres. It is also sediment barrier for stage two Inlet.

H. Drop Inlet Insert Basket: Is a temporary barrier placed within a storm drain inlet (Lower Portion of Stage I and Upper Portion of Stage II Inlets) consisting of a filter fabric supported by a metal frame work to prevent sediment and other pollutants from entering convey system.

I. Brush Berm: Brush Berm is constructed at the perimeter of a distribute site within the developing area.

1.05 SUBMITTALS

A. Conform to requirements of Section 01330 - Submittal Procedures.

B. Submit manufacturer's literature for product specifications and installation instructions.

C. Submit manufacturers catalog sheets and other product data on geotextile or filter fabrics, outlet pipe, perforated riser and connectors.

D. Submit proposed methods, equipment, materials, and sequence of operations for storm-water pollution prevention structures.

E. Submit shop drawings for Drop Inlet Baskets.

PART 2 P R O D U C T S

2.01 CONCRETE

A. Concrete: Class B in accordance with Section 03315 – Concrete for Utility Construction or as shown on the Drawings.

2.02 AGREGATE MATERIALS

A. Use poorly graded cobbles with diameter greater than 3 inches and less than 5 inches.

B. Provide gravel lining in accordance with Section 2320 – Utility Backfill Materials or as shown on the drawings.

C. Provide clean cobbles and gravel consisting of crushed concrete or stone. Use clean, hard crushed concrete or stone free from adherent coatings, salt, alkali, dirt, clay, loam, shale, soft or flaky materials, or organic matter.

D. Sediment Pump Pit Aggregate: Use nominal 2-inch diameter river gravel.

2.03 PIPE

A. Polyethylene culvert pipe or PVC sewer pipe in accordance with Section 02505- High Density Polyethylene (HDPE) Solid and Profile Wall Pipe and Section 02506 Polyvinyl Chloride Pipe or as shown on the Drawings.

B. Inlet Pipes: Galvanized steel pipe in accordance with Section 02642 Corrugated Metal Pipe or as shown on the Drawings.

C. Standpipe for Sediment Pump Pits: Galvanized round culvert pipe or round PVC pipe, minimum of 12-inch and a maximum of 24-inch diameter, perforate at 6 to 12 inch centers around circumference.

2.04 GEOTEXTILE FILTER FABRIC

A. Woven or nonwoven geotextile filter fabric made of either polypropylene, polyethylene, ethylene, or polyamide material, in continuous rolls of longest practical length.

B. Grab Strength: 100 psi in any principal direction (ASTM D-4632), Mullen burst strength >200 psi (ASTM D-3786), and equivalent opening size between 50 and 140.

C. Furnish ultraviolet inhibitors and stabilizers for minimum 6 months of expected usable construction life at temperature range of 0 degrees F to 120 degrees F.

D. Mirafi, Inc., Synthetic Industries, or equivalent

2.05 BARRIER

A. Wire Barrier: Woven galvanized steel wire, 14 gauge by 6-inch square mesh spacing, minimum 24 inch roll or sheet width of longest practical length.

B. Barrier Stakes: Nominal 2 by 2 inch moisture-resistant treated wood or steel posts (min. of 1.25 lbs. per linear foot and Brinell Hardness greater than 140) with safety caps on top; length as required for minimum 8 inch bury and full

height of filter fabric.

2.06 SANDBAGS

A. Provide woven material made of polypropylene, polyethylene, or polyamide material.

1. Minimum unit weight of four ounces per square yard.

2. Minimum grab strength of 100 lbs in any principal direction (ASTM D4632)

3. Mullen burst strength exceeding 300 lbs (ASTM D4833).

4. Ultraviolet stability exceeding 70 percent. After 500 hours of exposure (ASTM 4355).

5. Size: Length:18 to 24 inches. Width: 12 to 18 inches. Thickness: 6 to 8 inches. Weight: Approximately 40 to 50 pounds not to exceed 75 pounds.

2.07 Bagged gravel Barrier

1. Minimum unit weight of four ounces per square yard.

2. Minimum grab strength of 100 lbs in any principal direction (ASTM D4632)

3. Mullen burst strength exceeding 300 lbs (ASTM D4833).

4. Ultraviolet stability exceeding 70 percent. After 500 hours of exposure (ASTM 4355).

5. Size: Length:18 to 24 inches. Width: 12 to 18 inches. Thickness: 6 to 8 inches. Weight: Approximately 40 to 50 pounds not to exceed 75 pounds.

2.08 DROP INLET BASKET

A. Provide steel frame members in accordance with ASTM A36.

B. Construct top frame of basket with two short sides of 2 inch by 2 inch and single long side of 1 inch by 1 inch, 1/8 inch angle iron. Construct basket hangers of 2 inch by 1/4 inch iron bars. Construct bottom frame of 1 inch by 1/4 inch iron bar or 1/4 inch plate with center 3 inches removed. Use minimum 1/4 inch diameter iron rods or equivalent for sides of inlet basket.

Weld minimum of 14 rods in place between top frame/basket hanger and bottom frame. Exact dimensions for top frame and insert basket will be determined based on dimensions of type of inlet being protected.

2.09 HAY BALE

A. Hay: Standard-baled agricultural hay bound by wire, nylon, or polypropylene rope. Do not use jute or cotton binding.

B. Hay Bale Stakes (applicable where bales are on soil): No. 3 (3/8 diameter) reinforcing bars, deformed or smooth at Contractor's option, length as required for minimum 18 inch bury and full height bales.

PART 3 E X E C U T I O N

3.01 PREPARATION, INSTALLATION AND MAINTEINANCE

A. Provide erosion and sediment control structures at locations shown on the Drawings.

B. Do not clear, grub or rough cut until erosion and sediment control systems are in place unless approved by Project Manger to allow installation of erosion and sediment control systems, soil testing and surveying.

C. Maintain existing erosion and sediment control systems located within project site until acceptance of Project or until directed by Project Manger to remove and discard existing system.

D. Regularly inspect and repair or replace damaged components of erosion and sediment control structures. Unless otherwise directed, maintain erosion and sediment control structure until project area stabilization is accepted. . Redress and replace granular fill at outlets as needed to replenish depleted granular fill. Remove erosion and sediment control structures promptly when directed by Project Manger. Dispose of materials in accordance with Section 01576 - Waste Material Disposal.

E. Remove and dispose sediment deposits at the designated spoil site for the Project. If a project spoil site is not designated on Drawings, dispose of sediment off site at approved location in accordance with Section 01576 - Waste Material Disposal.

F. Unless otherwise shown on the Drawings, compact embankments, excavations, and trenches in accordance with Section 02315 Roadway

Excavation or Section 2317 Excavation and Backfill for Utilities.

G. Prohibit equipment and vehicles from maneuvering on areas outside of dedicated right of way and easements for construction. Immediately repair damage caused by construction traffic to erosion and sediment control structures.

H. Protect existing trees and plants in accordance with Section 1562 – Tree and Plant Protection.

3.02 SEDIMENT TRAPS

A. Install sediment traps so that surface runoff shall percolate through system in sheet flow fashion and allow retention and accumulation of sediment.

B. Inspect sediment traps after each rainfall, daily during periods of prolonged rainfall, and at a minimum once each week. Repair or replace damaged sections immediately.

C. Use fill material for embankment in accordance with Section 02320 – Utility Backfill Materials.

D. Excavation length and height shall be as specified on Drawings. Use side slopes of 2:1 or flatter.

E. Stone outlet sediment traps:

1. Maintain minimum of 6 inches between top of core material and top of stone outlet, minimum of 4 inches between bottom of core material and existing ground and minimum of 1 foot between top of stone outlet and top of embankment.

2. Embed cobbles minimum of 4 inches into existing ground for stone outlet. Core shall be minimum of 1 foot in height and in width and wrapped in triple layer of geotextile filter fabric.

F. Sediment Basin with Pipe Outlet Construction Methods: Install outlet pipe and riser as shown on the Drawings.

G. Remove sediment deposits when design basin volume is reduced by one-third or sediment level is one foot below principal spillway crest, whichever is less.

3.03 FILTER FABRIC BARRIER CONSTRUCTION METHODS

A. Fence Type 1: Filter Fabric: Barrier

1. Install stakes 3 feet on center maximum and firmly embed minimum 8 inches in soil. If filter fabric is factory preassembled with support netting, then maximum support spacing is 8 feet. Install wood stakes at a slight angle toward the source of anticipated runoff.

2. Trench in the toe of the fence lines so the downward face of the trenches is flat and perpendicular to direction of flow. V-trench configuration as shown on Drawings may also be used.

3. Lay fabric along edges of trenches in longest practical continuous runs to minimize joints. Make joints only at a support post. Splice with minimum 6-inch overlap and seal securely.

4. Staple filter fabric to stakes at maximum 3 inches on center. Extend fabric minimum 18 inches and maximum 36 inches above natural ground.

5. Backfill and compact trench.

B. Barrier Type 2: Reinforced Filter Fabric Barrier

1. Layout barrier same as for Type 1.

2. Install stakes at 6 feet on center maximum and at each joint in wire fence, firmly embedded 1-foot minimum, and inclined it as for Type 1.

3. Tie wire fence to stakes with wire at 6 inches on center maximum. Overlap joints minimum one bay of mesh.

4. Install trench same as for Type 1.

5. Fasten filter fabric wire fence with tie wires at 3 inches on center maximum.

6. Layout fabric same as for Type 1. Fasten to wire fence with wire ties at 3 inches on center maximum and, if applicable, to stakes above top of wire fence it as for Type 1.

7. Backfill and compact trench.

8. Attach filter fabric to wooden fence stakes spaced a maximum of 6 feet apart or steel fence stakes spaced a maximum of 8 feet apart and embedded a minimum of 12 inches. Install stakes at a slight angle toward source of anticipated runoff.

9. Trench in toe of filter fabric barrier with spade or mechanical trencher so that downward face of trench is flat and perpendicular to direction of flow. A V-trench configuration may also be used. Lay filter fabric along edges of trench. Backfill and compact trench upon completion of Construction.

10. Filter fabric fence shall have a minimum height of 18 inches and a maximum height of 36 inches above natural ground.

11. Cut length of fence to minimize use of joints. When joints are necessary, splice fabric together only at support post with minimum 6 inch overlap and seal securely.

12. When used in swales, ditches or diversions, elevation of barrier at top of filter fabric at flow line location in channel shall be lower than bottom elevation of filter fabric at ends of barrier or top of bank, whichever is less, in order to keep storm water discharge in channel from overtopping bank.

C. Triangular Filter Fabric Barrier Construction Methods

1. Attach filter fabric to wire fencing, 18 inches on each side. Provide a fabric cover and skirt with continuous wrapping of fabric. Skirt should form continuous extension of fabric on upstream side of fence.

2. Secure triangular fabric filter barrier in place using one of the following methods:
   a. Toe-in skirt 6 inches with mechanically compacted material;
   b. Weight down skirt with continuous layer of 3-inch to 5-inch graded rock; or
   c. Trench-in entire structure 4 inches.

3. Anchor triangular fabric filter barrier structure and skirt securely in place using 6-inch wire staples on 2-foot centers on both edges and on skirt, or staked using 18-inch by 3/8-inch diameter re-bar with tee ends.

4. Lap fabric filter material by 6 inches to cover segment joints. Fasten joints with galvanized shoat rings.

3.04 DIKE AND SWALE

A. Unless otherwise indicated, maintain minimum dike height of 18 inches, measured from cleared ground at up slope toe to top of dike. Maintain side slopes of 2:1 or flatter.

B. Dike and Swale Stabilization: When shown on the Drawings, place gravel lining 3 inches thick and compacted into the soil or 6 inches thick if truck crossing is expected. Extend gravel lining across bottom and up both sides of swale minimum height of 8 inches vertically, above bottom. Gravel lining on dike side shall extend up the up slope side of dike a minimum height of 8 inches, measured vertically from interface of existing or graded ground and up slope toe of dike, as shown on Drawings.

C. Divert flow from dikes and swales to sediment basins, stabilized outlets, or sediment trapping devices of types and at locations shown on Drawings. Grade dikes and swales as shown on Drawings, or, if not specified, provide positive drainage with maximum grade of 1 percent to outlet or basin.

D. Clear in accordance with Section 2233 – Clearing and Grubbing Compact embankments in accordance with Section 2315 – Roadway Excavation.

E. Carry out excavation for swale construction so that erosion and water pollution is minimal. Minimum depth shall be 1 foot and bottom width shall be 4 feet, with level swale bottom. Excavation slopes shall be 2:1 or flatter. Clear, grub and strip excavation area of vegetation and root material.

3.05 DOWN SPOUT EXTENDER

A. Down spout extender shall have slope of approximately 1 percent. Use pipe diameter of 4 inches or as shown on the Drawings. Place pipe in accordance with Section 2317 - Bedding and Backfill for Utilities.

3.06 PIPE SLOPE DRAIN

A. Compact soil around and under drain entrance section to top of embankment in lifts appropriately sized for method of compaction utilized.

B. Inlet pipe shall have slope of 1 percent or greater. Use pipe diameter as shown on the Drawings.

C. Top of embankment over inlet pipe and embankments directing water to pipe shall be at least 1 foot higher at all points than top of inlet pipe.

D. Pipe shall be secured with hold-down grommets spaced 10 feet on centers.

E. Place riprap apron with a depth equal to pipe diameter with 2:1 side slopes.

3.07 PAVED FLUME

A. Compact soil around and under the entrance section to top of the embankment in lifts appropriately sized for method of compaction utilized.

B. Construct subgrade to required elevations. Remove and replace soft sections and unsuitable material. Compact subgrade thoroughly and shape to a smooth, uniform surface.

C. Construct permanent paved flumes in accordance with Drawings.

D. Remove sediment from riprap apron when sediment has accumulated to depth of one foot.

3.08 LEVEL SPREADER

A. Construct level spreader on undisturbed soil and not on fill. Ensure that spreader lip is level for uniform spreading of storm runoff.

B. Maintain at required depth, grade, and cross section as specified on Drawings. Remove sediment deposits as well as projections or other irregularities which will impede normal flow.

3.09 INLET PROTECTION BARRIER

A. Place sandbags for Stage I, Bagged gravel for Stage II and filter fabric barriers at locations shown on the SWP3. Maintain to allow minimal inlet in flow restrictions / blockage during storm event.

3.10 DROP INLET BASKET CONSTRUCTION METHODS

A. Fit inlet insert basket into inlet without gaps around insert at locations shown on the SWP3.

B. Support for inlet insert basket shall consist of fabricated metal as shown on Drawings.

C. Push down and form filter fabric to shape of basket. Use sheet of fabric large enough to be supported by basket frame when holding sediment and extend at least 6 inches past frame. Place inlet grates over basket/frame to serve as fabric anchor.

D. Remove sediment deposit after each storm event and whenever accumulation exceeds 1-inch depth during weekly inspections.

3.11 HAY BALE FENCE CONSTRUCTION METHODS

A. Place bales in row with ends tightly abutting adjacent bales. Place bales with bindings parallel to ground surface.

B. Embed bale in soil a minimum of 4 inches.

C. Securely anchor bales in place with Hay Bale Stakes driven through bales a minimum of 18-inches into ground. Angle first stake in each bale toward previously laid bale to force bales together.

D. Fill gaps between bales with straw to prevent water from channeling between bales. Wedge carefully in order not to separate bales.

E. Replace with new hay bale fence every two months or as required by Project Manager.

3.12 BRUSH BERM CONSTRUCTION METHODS

A. Construct brush berm along contour lines by hand placing method. Do not use machine placement of brush berm.

B. Use woody brush and branches having diameter less than 2-inches with 6-inches overlap. Avoid incorporation of annual weeds and soil into brush berm.

C. Use minimum height of 18-inches measured from top of existing ground at upslope toe to top of berm. Top width shall be 24 inches minimum and side slopes shall be 2:1 or flatter.

D. Embed brush berm into soil a minimum of 4-inches and anchor using wire, nylon or polypropylene rope across berm with a minimum tension of 50 pounds. Tie rope securely to 18-inch x 3/8-inch diameter rebar stakes driven into ground on 4-foot centers on both sides of berm.

3.13 STREET AND SIDEWALK CLEANING

A. Keep areas clean of construction debris and mud carried by construction vehicles and equipment. If necessary, install stabilized construction exits at construction, staging, storage, and disposal areas, following Section 01575-Stabilized Construction Exit.

B. In lieu of or in addition to stabilized construction exits, shovel or sweep pavements as required to keep areas clean. Do not waterhose or sweep debris and mud off street into adjacent areas, except, hose sidewalks during off-peak hours, after sweeping.

3.14 WASTE COLLECTION AREAS

A. Prevent water runoff from passing through waste collection areas, and prevent water runoff from waste collection areas migrating outside collection areas.

3.15 EQUIPMENT MAINTENANCE AND REPAIR

A. Confine maintenance and repair of construction machinery and equipment to areas specifically designated for that purpose, so fuels, lubricants, solvents, and other potential pollutants are not washed directly into receiving streams or storm water conveyance systems. Provide these areas with adequate waste disposal receptacles for liquid and solid waste. Clean and inspect maintenance areas daily.

B. Where designated equipment maintenance areas are not feasible, take precautions during each individual repair or maintenance operation to prevent potential pollutants from washing into streams or conveyance systems. Provide temporary waste disposal receptacles.

3.16 VEHICLE/ EQUIPMENT WASHING AREAS

A. Install wash area (stabilized with coarse aggregate) adjacent to stabilized construction access, as required to prevent mud and dirt run-off. Release wash water into drainage swales or inlets protected by erosion and sediment controls. Build wash areas following Section 01575- Stabilized Construction access. Install gravel or rock base beneath wash areas.

B. Wash vehicles only at designated wash areas. Do not wash vehicles such as concrete delivery trucks or dump trucks and other construction equipment at locations where runoff flows directly into waterways or storm water conveyance systems.

C. Locate wash areas to spread out and evaporate or infiltrate wash water directly into ground, or collect runoff in temporary holding or seepage basins.

3.17 WATER RUNOFF AND EROSION CONTROL

A. Control surface water, runoff, subsurface water, and water from excavations and structures to prevent damage to the Work, the site, or adjoining properties. Follow environment requirements.

B. Control fill, grading and ditching to direct water away from excavations, pits, tunnels, and other construction areas, and to direct drainage to proper runoff courses to prevent erosion, sedimentation or damage.

C. Provide, operate, and maintain equipment and facilities of adequate size to control surface water.

D. Retain existing drainage patterns external to the site by constructing temporary earth berms, sedimentation basins, retaining areas, and temporary ground cover as required to control conditions.

E. Plan and execute construction and earth work to control surface drainage from cuts and fills, and from borrow and waste disposal areas, to prevent erosion and sedimentation.

1. Hold area of bare soil exposed at one time to a minimum.

2. Provide temporary controls such as berms, dikes, and drains.

F. Construct fill and waste areas by selective placement to eliminate surface silts or clays which will erode.

G. Inspect earthwork periodically to detect start of erosion. Immediately apply corrective measures as required to control erosion.

H. Dispose of sediments offsite, not in or adjacent to waterways or floodplains, nor allow sediments to flush into streams or drainage ways. Assume responsibility for offsite disposal location.

I. Unless otherwise indicated, compact embankments, excavations, and trenches by mechanically blading, tamping, and rolling soil in maximum of 8-inch layers. Provide compaction density at minimum 90 percent Standard Proctor ASTM D-698-78 density. Make at least one test per 500 cubic yards of embankment.

J. Prohibit equipment and vehicles from maneuver on areas outside of dedicated rights-of-way and easements for construction. Immediately repair damage to erosion and sedimentation control systems caused by construction traffic.

K. Do not damage existing trees intended to remain.

3.18 REMOVAL OF CONTROLS

A. Remove erosion and sediment controls when the site is finally stabilized or as directed by Project Manager.

B. Dispose of sediments and waste products following Section 01505-Temporary Facilities.

END OF SECTION

Section 01575

STABILIZED CONSTRUCTION ACCESS

PART 1 GENERAL

1.01 SECTION INCLUDES

A. Installation and removal of erosion and sediment control for stabilized construction access used during construction and prior to final development of site, as shown in City of Houston Standard Construction details, DWG No. 01571-01.

1.02 MEASUREMENT AND PAYMENT

A. Unit Price Contracts. If Contract is Unit Price Contract, payment for work in this Section will be based on the following:

1. Stabilized construction roads, parking areas, access and wash areas: per square yard of aggregate/recycled concrete without reinforcing placed in 8-inch layers. No separate payment will be made for street cleaning necessary to meet TPDES requirements. Include cost of work for street cleaning under related Specification section.

B. Stipulated Price (Lump Sum) Contracts. If the Contract is a Stipulated Price Contract, include payment for work under this Section in the total Stipulated Price.

1.03 SUBMITTALS

A. Conform to requirements of Section 01330 - Submittal Procedures.

B. Submit manufacturers catalog sheets and other Product Data on geotextile fabric.

C. Submit sieve analysis of aggregates conforming to requirements of this Specification.

1.04 REFERENCES

A. ASTM D 4632 - Standard Test Method for Grab Breaking Load and Elongation of Geotextiles.

B. Storm Water Quality Management Handbook For Construction Activities prepared by the City of Houston, Harris County and Harris County Flood Control District.

PART 2 PRODUCTS

2.01 GEOTEXTILE FABRIC

A. Provide woven or non-woven geotextile fabric made of polypropylene, polyethylene, ethylene, or polyamide material.

B. Geotextile fabric: Minimum grab strength of 200 lbs in any principal direction (ASTM D-4632) and equivalent opening size between 50 and 140.

C. Geotextile and threads: Resistant to chemical attack, mildew, and rot and contain ultraviolet ray inhibitors and stabilizers to provide minimum of six months of expected usable life at temperature range of 0 to 120 degrees F.

D. Representative Manufacturers: Mirafi, Inc. or equal.

2.02 COARSE AGGREGATES

A. Coarse aggregate: Crushed stone, gravel, crushed blast furnace slag, or combination of these materials. Aggregate shall be composed of clean, hard, durable materials free from adherent coatings of, salt, alkali, dirt, clay, loam, shale, soft or flaky materials, or organic and injurious matter.

B. Coarse aggregates to consist of open graded rock 2" to 8" in size.

PART 3 EXECUTION

3.01 PREPARATION AND INSTALLATION

A. Provide stabilized construction roads and access at construction, staging, parking, storage,
and disposal areas to keep street clean of mud carried by construction vehicles and equipment. Construct erosion and sediment controls in accordance with Drawings and Specification requirements.

B. Do not clear grub or rough cut until erosion and sediment control systems are in place, unless approved by Project Manager to allow soil testing and surveying.

C. Maintain existing construction site erosion and sediment control systems until acceptance of the Work or until removal of existing systems is approved by Project Manager.

D. Regularly inspect, repair or replace components of stabilized construction access. Unless otherwise directed, maintain stabilized construction roads and

access until the City accepts the Work. Remove stabilized construction roads and access promptly when directed by Project Manager. Discard removed materials off-site.

E. Remove and dispose of sediment deposits at designated spoil site for Project. If a spoil site is not designated on Drawings, dispose of sediment off-site at a location not in or adjacent to stream or flood plain. Assume responsibility for off-site disposal.

F. Spread compacted and stabilized sediment evenly throughout site. Do not allow sediment to flush into streams or drainage ways. Dispose of contaminated sediment in accordance with existing federal, state, and local rules and regulations.

G. Prohibit equipment and vehicles from maneuvering on areas outside of dedicated rights-of-way and easements for construction. Immediately repair damage to erosion and sediment control systems caused by construction traffic.

H. Conduct construction operations in conformance with erosion control requirements of Specification 01570 – Storm Water Pollution Control.

3.02 CONSTRUCTION MAINTENANCE

A. Provide stabilized access roads, subdivision roads, parking areas, and other on-site vehicle transportation routes where shown on Drawings.

B. Provide stabilized construction access and vehicle washing areas, when approved by Project Manager, of sizes and at locations shown on Drawings or as specified in this Section.

C. Clean tires to remove sediment on vehicles leaving construction areas prior to entering public right-of-ways. Construct wash areas needed to remove sediment. Release wash water into drainage swales or inlets protected by erosion and sediment control measures.

D. Details for stabilized construction access are shown on Drawings. Construct other stabilized areas to same requirements. Maintain minimum roadway widths of 14 feet for one-way traffic and 20 feet for two-way traffic and of sufficient width to allow ingress and egress. Place geotextile fabric as a permeable separator to prevent mixing of coarse aggregate with underlaying soil. Limit exposure of geotextile fabric to elements between laydown and cover to a maximum 14 days to minimize potential damage.

E. Grade roads and parking areas to provide sufficient drainage away from stabilized areas. Use sandbags, gravel, boards, or similar materials to prevent sediment from entering public right-of-ways, waterways or

storm water conveyance systems.

F. Inspect and maintain stabilized areas daily. Provide periodic top dressing with additional coarse aggregates to maintain required depth. Repair and clean out damaged control systems used to trap sediment. Immediately remove spilled, dropped, washed, or tracked sediment from public right-of-ways.

G. Maintain lengths of stabilized areas as shown on Drawings or a minimum of 50 feet. Maintain a minimum thickness of 8 inches. Maintain minimum widths at all points of ingress or egress.

H. Stabilize other areas with the same thickness, and width of coarse aggregate required for stabilized construction access, except where shown otherwise on Drawings.

I. Stabilized areas may be widened or lengthened to accommodate truck washing areas when authorized by Project Manager.

J. Clean street daily before end of workday. When excess sediments have tracked onto streets, Project Manager may direct Contractor to clean street as often as necessary. Remove and legally dispose of sediments.

K. Use other erosion and sediment control measures to prevent sediment runoff during rain periods and non-working hours and when storm discharges are expected.

END OF SECTION

Section 01576

WASTE MATERIAL DISPOSAL

PART 1 GENERAL

1.01 SECTION INCLUDES

A. Disposal of waste material and salvageable material.

1.02 SUBMITTALS

A. Conform to requirements of Section 01330 - Submittal Procedures.

B. Submit copy of approved "Development Permit", as defined in Chapter 19 of Flood Plain Ordinance (City Ordinance Number 81-914 and Number 85-1705), prior to disposal of excess material in areas designated as being in "100-year Flood Hazard Area" within the City. Contact the City of Houston Flood Plain Manager, 3300 Main Street, at (713) 525-7605 for flood plain information.

C. Obtain and submit disposal permits for proposed disposal sites, if required by local ordinances.

D. Submit copy of written permission from property owner, with description of property, prior to disposal of excess material adjacent to Project. Submit written and signed release from property owner upon completion of disposal work.

E. Describe waste materials expected to be stored on-site and a description of controls to reduce Pollutants from these materials, including storage practices to minimize exposure of materials to storm water; and spill prevention and response measures in the Project's Storm Water Pollution Prevention Plan (SWPPP). Refer to Section 01410 – TPDES Requirements.

PART 2 PRODUCTS - Not Used

PART 3 EXECUTION

3.01 SALVAGEABLE MATERIAL

A. Excavated Material: When indicated on Drawings, load, haul, and deposit excavated material at location or locations shown on Drawings outside limits of Project.

B. Base, Surface, and Bedding Material: Load shell, gravel, bituminous, or other base and surfacing material designated for salvage into City trucks.

C. Pipe Culvert: Load culverts designated for salvage into City trucks.

D. Other Salvageable Materials: Conform to requirements of individual Specification Sections.

E. Coordinate loading of salvageable material on City trucks with Project Manager.

3.02 EXCESS MATERIAL

A. Remove and legally dispose of vegetation, rubble, broken concrete, debris, asphaltic concrete pavement, excess soil, and other materials not designated for salvage from job site.

B. Excess soil may be deposited on private property adjacent to Project when written permission is obtained from property owner. See Paragraph 1.02 D above.

C. Verify flood plain status of any proposed disposal site. Do not dispose of excavated materials in area designated as within 100-year Flood Hazard Area unless "Development Permit" has been obtained. Remove excess material placed in "100-year Flood Hazard Area" within the City, without "Development Permit", at no additional cost to the City.

D. Remove waste materials from site daily, in order to maintain site in neat and orderly condition.

END OF SECTION

Section 01578

CONTROL OF GROUND AND SURFACE WATER

PART 1 GENERAL

1.01 SECTION INCLUDES

A. Dewatering, depressurizing, draining, and maintaining trenches, shaft excavations, structural excavations and foundation beds in stable condition, and controlling ground water conditions for tunnel excavations.

B. Protecting work against surface runoff and rising floodwaters.

C. Trapping suspended sediment in the discharge form the surface and ground water control systems.

1.02 MEASUREMENT AND PAYMENT

A. UNIT PRICES

1. When noted, dewatering of trench or excavation during course of project shall be measured per linear foot and paid for at contract unit prices for dewatering, when directed to perform such work by Project Manager. Dewatering must be fully detailed in submittal and submittal must be approved prior to performing dewatering work before payment will be made for dewatering. No payment will be made for work unless directed to perform work by Project Manager.

2. Presence of a pump on project does not constitute dewatering for payment under bid item "Ground Water Control for Open Cut Construction."

3. Dewatering required during course of project to lower water table for other utility installation less than 24 inches in diameter, construction of structures, removal of standing water, surface drainage seepage, or to protect against rising waters or floods shall be considered incidental to Work unless otherwise noted.

4. No separate payment will be made for groundwater control associated with augering, tunnels or casing. Include cost in unit price for augering.

5. Refer to Section 01270 - Measurement and Payment for unit price procedures.

B. Stipulated Price (Lump Sum) Contract. If the Contract is a Stipulated Price Contract, include payment for work under this section in the total Stipulated

Price.

1.03 REFERENCES

A. ASTM D 698 - Standard Test Methods for Laboratory Compaction of Soils Using Standard Effort (12,400 ft-lbf/ft3 (600kN-m/m3)

B. Federal Regulations, 29 CFR Part 1926, Standards-Excavation, Occupational Safety and Health Administration (OSHA)

C. Storm Water Management Handbook for Construction Activities prepared by City of Houston, Harris County and Harris County Flood Control District.

1.04 DEFINITIONS

A. Ground water control system: system used to dewater and depressurize water-bearing soil layers.

1. Dewatering: lowering the water table and intercepting seepage that would otherwise emerge from slopes or bottoms of excavations, or into tunnels and shafts; and disposing of removed water. Intent of dewatering is to increase stability of tunnel excavations and excavated slopes, prevent dislocation of material from slopes or bottoms of excavations, reduce lateral loads on sheeting and bracing, improve excavating and hauling characteristics of excavated material, prevent failure or heaving of bottom of excavations, and to provide suitable conditions for placement of backfill materials and construction of structures and other installations.

2. Depressurization: includes reduction in piezometric pressure within strata not controlled by dewatering alone, necessary to prevent failure or heaving of excavation bottom or instability of tunnel excavations.

B. Excavation drainage: includes keeping excavations free of surface and seepage water.

C. Surface drainage: includes use of temporary drainage ditches and dikes and installation of temporary culverts and sump pumps with discharge lines necessary to protect Work from any source of surface water.

D. Monitoring facilities for ground water control system: includes piezometers, monitoring wells and flow meters for observing and recording flow rates.

1.05 PERFORMANCE REQUIREMENTS

A. Conduct subsurface investigations to identify groundwater conditions and to

provide parameters for design, installation, and operation of groundwater control systems. Submit proposed method and spacing of readings for review prior to obtaining water level readings.

B. Design ground water control system, compatible with requirements of Federal Regulations 29 CFR Part 1926 and Section 02260 - Trench Safety Systems, to produce following results:

1. Effectively reduce hydrostatic pressure affecting:

   a. Excavations

   b. Tunnel excavation, face stability or seepage into tunnels

2. Develop substantially dry and stable subgrade for subsequent construction operations

3. Preclude damage to adjacent properties, buildings, structures, utilities, installed facilities and other work

4. Prevent loss of fines, seepage, boils, quick condition, or softening of foundation strata

5. Maintain stability of sides and bottom of excavations

C. Provide ground water control systems that include single-stage or multiple-stage well point systems, eductor and ejector-type systems, deep wells, or combinations of these equipment types.

D. Provide drainage of seepage water and surface water, as well as water from other sources entering excavation. Excavation drainage may include placement of drainage materials, crushed stone and filter fabric, together with sump pumping.

E. Provide ditches, berms, pumps and other methods necessary to divert and drain surface water from excavation and other work areas.

F. Locate ground water control and drainage systems so as not to interfere with utilities, construction operations, adjacent properties, or adjacent water wells.

G. Assume sole responsibility for ground water control systems and for any loss or damage resulting from partial or complete failure of protective measures and settlement or resultant damage caused by ground water control operations. Modify ground water control systems or operations if they cause or threaten to cause damage to new construction, existing site improvements, adjacent property, adjacent water wells, or potentially contaminated areas. Repair damage caused by ground water control systems or resulting from

failure of system to protect property as required.

H. Install an adequate number of piezometers installed at proper locations and depths, necessary to provide meaningful observations of conditions affecting excavation, adjacent structures and water wells.

I. Install environmental monitoring wells at proper locations and depths necessary to provide adequate observations of hydrostatic conditions and possible contaminant transport from contamination sources into work area or ground water control system.

1.06 SUBMITTALS

A. Conform to requirements of Section 01330 - Submittals Procedures.

B. Submit Ground Water and Surface Water Control Plan for review by Project Manager prior to start of excavation work. Include the following:

1. Results of subsurface investigations and description of extent and characteristics of water bearing layers subject to ground water control

2. Names of equipment Suppliers and installation Subcontractors

3. Description of proposed ground water control systems indicating arrangement, location, depth and capacities of system components, installation details and criteria and operation and maintenance procedures

4. Description of proposed monitoring facilities indicating depths and locations of piezometers and monitoring wells, monitoring installation details and criteria, type of equipment and instrumentation with pertinent data and characteristics

5. Description of proposed filters including types, sizes, capacities and manufacturer's application recommendations

6. Design calculations demonstrating adequacy of proposed systems for intended applications. Define potential area of influence of ground water control operation near contaminated areas.

7. Operating requirements, including piezometric control elevations for dewatering and depressurization

8. Excavation drainage methods including typical drainage layers, sump pump application and other means

9. Surface water control and drainage installations

10. Proposed methods and locations for disposing of removed water

C. Submit following records upon completion of initial installation:

1. Installation and development reports for well points, eductors, and deep wells

2. Installation reports and baseline readings for piezometers and monitoring wells

3. Baseline analytical test data of water from monitoring wells

4. Initial flow rates

D. Submit the following records weekly during control of ground and surface water operations:

1. Records of flow rates and piezometric elevations obtained during monitoring of dewatering and depressurization. Refer to Paragraph 3.02, Requirements for Eductor, Well Points, or Deep Wells.

2. Maintenance records for ground water control installations, piezometers and monitoring wells

1.07 ENVIRONMENTAL REQUIREMENTS

A. Comply with requirements of agencies having jurisdiction.

B. Comply with Texas Commission on Environmental Quality regulations and Texas Water Well Drillers Association for development, drilling, and abandonment of wells used in dewatering system.

C. Obtain necessary permits from agencies with jurisdiction over use of groundwater and matters affecting well installation, water discharge, and use of existing storm drains and natural water sources. Since review and permitting process may be lengthy, take early action to obtain required approvals.

D. Monitor ground water discharge for contamination while performing pumping in vicinity of potentially contaminated sites.

PART 2 PRODUCTS

2.01 EQUIPMENT AND MATERIALS

A. Select equipment and materials necessary to achieve desired results for dewatering. Selected equipment and materials are subject to review by Project Manager through submittals required in Paragraph 1.06, Submittals.

B. Use experienced contractors, regularly engaged in ground water control system design, installation, and operation, to furnish and install and operate educators, well points, or deep wells, when needed

C. Maintain equipment in good repair and operating condition.

D. Keep sufficient standby equipment and materials available to ensure continuous operation, where required.

E. Portable Sediment Tank System: Standard 55-gallon steel or plastic drums, free of hazardous material contamination.

1. Shop or field fabricate tanks in series with main inlet pipe, inter-tank pipes and discharge pipes, using quantities sufficient to collect sediments from discharge water.

PART 3 EXECUTION

3.01 GROUND WATER CONTROL

A. Perform necessary subsurface investigation to identify water bearing layers, piezometric pressures and soil parameters for design and installation of ground water control systems. Perform pump tests, if necessary to determine draw down characteristics. Present results in the Ground Water and Surface Water Control Plan. submittal

B. Provide labor, material, equipment, techniques and methods to lower, control and handle ground water in manner compatible with construction methods and site conditions. Monitor effectiveness of installed system and its effect on adjacent property.

C. Install, operate, and maintain ground water control systems in accordance with the Ground Water and Surface Water Control Plan. Notify Project Manager in writing of changes made to accommodate field conditions and changes to Work. Provide revised drawings and calculations with notification.

D. Provide continuous system operation, including nights, weekends, and holidays. Arrange appropriate backup if electrical power is primary energy source for dewatering system.

E. Monitor operations to verify systems lower ground water piezometric levels at rate required to maintain dry excavation resulting in stable subgrade for

subsequent construction operations.

F. Depressurize zones where hydrostatic pressures in confined water bearing layers exist below excavations to eliminate risk of uplift or other instability of excavation or installed works. Define allowable piezometric elevations in the Ground Water and Surface Water Control Plan.

G. Removal of ground water control installations.

1. Remove pumping system components and piping when ground water control is no longer required.

2. Remove piezometers, including piezometers installed during design phase investigations and left for Contractor's use, upon completion of testing, as required in accordance with Part 3 of applicable specification.

3. Remove monitoring wells when directed by Project Manager.

4. Grout abandoned well and piezometer holes. Fill piping that is not removed with cement-bentonite grout or cement-sand grout.

H. During backfilling, maintain water level a minimum of 5 feet below prevailing level of backfill. Do not allow the water level to cause uplift pressures in excess of 80 percent of downward pressure produced by weight of structure or backfill in place. Do not allow water levels to rise into cement-stabilized sand until at least 48 hour after placement.

I. Provide uniform pipe diameter for each pipe drain run constructed for dewatering. Remove pipe drains when no longer required. If pipe removal is impractical, grout connections at 50-foot intervals and fill pipe with cement-bentonite grout or cement-sand grout after removal from service.

J. The extent of ground water control for structures with permanent perforated underground drainage systems may be reduced, for units designed to withstand hydrostatic uplift pressure. Provide a means to drain affected portions of underground systems, including standby equipment. Maintain drainage systems during construction operations.

K. Remove systems upon completion of construction or when dewatering and control of surface or ground water is no longer required.

L. Compact backfill to not less than 95 percent of maximum dry density in accordance with ASTM D 698.

M. Foundation Slab: Maintain saturation line at least 3 feet below lowest elevations where concrete is to be placed. Drain foundations in areas where

concrete is to be placed before placing reinforcing steel. Keep free from water for 3 days after concrete is placed.

3.02 REQUIREMENTS FOR EDUCTOR, WELL POINTS, OR DEEP WELLS

A. For aboveground piping in ground water control system, include a 12-inch minimum length of clear, transparent piping between each eductor well or well point and discharge header to allow visual monitoring of discharge from each installation.

B. Install sufficient piezometers or monitoring wells to show that trench or shaft excavations in water bearing materials are pre-drained prior to excavation. Provide separate piezometers for monitoring of dewatering and for monitoring of depressurization. Install piezometers and monitoring wells for tunneling as appropriate for selected method of work.

C. Install piezometers or monitoring wells at least one week in advance of the start of associated excavation.

D. Dewatering may be omitted for portions of under drains or other excavations, where auger borings and piezometers or monitoring wells show that soil is pre-drained by existing systems and that ground water control plan criteria are satisfied.

E. Replace installations that produce noticeable amounts of sediments after development.

F. Provide additional ground water control installations, or change method of control if, ground water control plan does not provide satisfactory results based on performance criteria defined by plan and by specifications. Submit revised plan according to Paragraph 1.06B.

3.03 SEDIMENT TRAPS

A. Install sediment tank as shown on approved plan.

B. Inspect daily and clean out tank when one-third of sediment tank is filled with sediment.

3.04 SEDIMENT SUMP PIT

A. Install sediment sump pits as shown on approved plan.

B. Construct standpipe by perforating 12 inch to 24-inch diameter corrugated metal or PVC pipe.

C. Extend standpipe 12 inches to 18 inches above lip of pit.

D. Convey discharge of water pumped from standpipe to sediment trapping device.

E. Fill sites of sump pits, compact to density of surrounding soil and stabilize surface when construction is complete.

3.05 EXCAVATION DRAINAGE

A. Use excavation drainage methods if well-drained conditions can be achieved. Excavation drainage may consist of layers of crushed stone and filter fabric, and sump pumping, in combination with sufficient ground water control wells to maintain stable excavation and backfill conditions.

3.06 MAINTENANCE AND OBSERVATION

A. Conduct daily maintenance and observation of piezometers or monitoring wells while ground water control installations or excavation drainage is operating at the site, or water is seeping into tunnels, and maintain systems in good operating condition.

B. Replace damaged and destroyed piezometers or monitoring wells with new piezometers or wells as necessary to meet observation schedules.

C. Cut off piezometers or monitoring wells in excavation areas where piping is exposed, only as necessary to perform observation as excavation proceeds. Continue to maintain and make specified observations

D. Remove and grout piezometers inside or outside of excavation area when ground water control operations are complete. Remove and grout monitoring wells when directed by Project Manager.

3.07 MONITORING AND RECORDING

A. Monitor and record average flow rate of operation for each deep well, or for each wellpoint or eductor header used in dewatering system. Also, monitor and record water level and ground water recovery. Record observations daily until steady conditions are achieved and twice weekly thereafter.

B. Observe and record elevation of water level daily as long as ground water control system is in operation, and weekly thereafter until Work is completed or piezometers or wells are removed, except when Project Manager determines more frequent monitoring and recording are required. Comply with Project Manager's direction for increased monitoring and recording and

take measures necessary to ensure effective dewatering for intended purpose.

3.08 SURFACE WATER CONTROL

A. Intercept surface water and divert it away from excavations through use of dikes, ditches, curb walls, pipes, sumps or other approved means. Requirement includes temporary works required to protect adjoining properties from surface drainage caused by construction operations.

B. Divert surface water and seepage water into sumps and pump it into drainage channels or storm drains, when approved by agencies having jurisdiction. Provide settling basins when required by agencies.

END OF SECTION

Section 01580

PROJECT IDENTIFICATION SIGNS

PART 1 GENERAL

1.01 SECTION INCLUDES

A. Project identification sign description.

B. Project sign installation.

C. Maintenance and removal of Project sign.

1.02 SYSTEM DESCRIPTION

A. Sign Construction: Construct signs of new materials in accordance with Standard Detail provided at the Pre-construction Conference.

B. Appearance: Maintain signs to present a clean and neat look throughout contract duration.

C. Sign Manufacturer: Experienced professional sign company.

D. Sign Placement: At locations shown in Drawings unless otherwise specified by Project Manager at pre-construction meeting.

1. Provide one sign at each end of a linear Project involving paving, overlay, sewer line, storm drainage, or water main construction located in rights-of-ways.

2. Provide one sign for site or building construction Contracts

3. Provide one sign at each site for Contracts with multiple sites.

4. Sign Relocation: As work progresses, relocate signs if directed by Project Manager in writing. Include cost for one relocation of post-mounted signs in Contract Price. Subsequent relocations, if directed by Project Manager in writing, will be subject to Change Order.

E. Skid-mounted signs: Use for projects with noncontiguous locations where work progresses from one location to another. Design skid structure to withstand a 60 mile-per-hour wind load to the face or back of sign using stakes, straps, or ballast. Contractor shall be responsible for security of signs at each site.

1.03 SUBMITTALS

A. Submit Shop Drawings under provisions of Section 01330 - Submittal procedures.

B. Show content, layout, lettering style, lettering size, and colors. Make sign and lettering to scale, clearly indicating condensed lettering, if used.

PART 2 P R O D U C T S

2.01 SIGN MATERIALS

A. Structure and Framing: Use new sign materials.

1. Sign Posts: 4-inch by 4-inch pressure treated wood posts, 9 feet long for skid mounting and 12 feet long minimum for in-ground mounting.

2. Skid Bracing: 2-inch by 4-inch wood framing material.

3. Skid Members: 2-inch by 6-inch wood framing material.

4. Fasteners:
   a. Galvanized steel.
   b. Attach sign to posts with 1/2-inch by 5-1/2 inch button head carriage bolts and secure with nuts and flat head washers.
   c. Cover button heads with white reflective film or paint to match sign background.
   d. Use metal brackets and braces and 3/4-inch wood screws to attach sign header.

B. Sign and Sign Header: 3/4-inch thick marine plywood. Use 4-foot by 8 -foot sheet for the sign and a single piece for the header to minimize joints. Do not piece wood sheets to fabricate sign face.

C. Paint and Primers: White industrial grade, fast-drying, oil-based paint with gloss finish for structural and framing members, sign, and sign header material surfaces. Paint all sign surfaces prior to adding adhesive applications.

D. Colors:

1. Sign Background: Reflective white 3M Scotchlite Engineer Grade, Pressure Sensitive Sheeting (White), or approved equal.

2. Border: For red border around area, which designates project name and project amount, use reflective red 3M Scotchlite Engineer Grade, Pressure Sensitive Sheeting (Red), or approved equal.

3. Sign Film: 3M Scotchcal Pressure Sensitive Films, or approved equal for legends, symbols, lettering, and artwork. Match colors to 3M Scotchcal Pressure Sensitive Films.

a.	Lettering Below Seal:	Black
b.	Lettering Above Project Name:	Vivid Blue
c.	Lettering on Blue Background:	White
d.	Background Behind Project Name:	Vivid Blue

E. City Seal: Project Manager will provide City seals to Contractor, as needed.

2.02 SIGN LAYOUT

A. Lettering:

1. Style, Size, and Spacing: Helvetica Regular lettering.

2. Condensed Style: Text may be condensed if needed to maintain sign composition.

B. Composition:

1. Lines with Standard Text
   a. Top line shall read "BUILDING TOGETHER FOR THE FUTURE".
   b. Use lower left below City Seal to list names and titles for Mayor, Controller and Council Members. Place as shown on Drawings with indicated size and spacing.
   c. Center telephone number of the Customer Response Center, "311", near the bottom of the area with the blue background.

2. Lines with Variable Text. Use blue background space for Project name and dollar amount.
   a. Project Manager will provide Project name and dollar amount of Project for preparation of sign. Center name on one or two lines, and dollar amount immediately below Project name, in area with blue background. Use condensed lettering if necessary.

2.03 LAYOUT AND COMPOSITION FOR HEADER

A. City of Houston Seal:
   1. A space of approximately 24 inches in diameter is provided for the City seal, the top 6 inches of which extends above the sign on the sign header.

   2. Construct sign header of same material as sign face. Cut material to match curve of the City seal.

   3. Project Manager will provide the seal to be affixed to the sign by sign maker.

PART 3 E X E C U T I O N

3.01 INSTALLATION

A. Install Project identification signs within seven days after Date of Commencement of the Work.

B. Erect signs at locations shown in Drawings unless otherwise designated by Project Manager at pre-construction meeting. Position sign so it is fully visible and readable to general public.

C. Erect sign level and plumb.

D. If mounted on posts, sink posts 3 to 4 feet below grade and stabilize posts to minimize lateral motion. Leave a minimum of 8 feet of post above existing grade for mounting of sign.

E. Erect sign so that top edge of sign is at a nominal 8 feet above existing grade.

3.02 MAINTENANCE AND REMOVAL

A. Keep signs and supports clean. Repair deterioration and damage.

B. Remove signs, framing, supports, and foundations to a depth of at least 2 feet upon completion of Project. Restore area to a condition equal to or better than before construction.

PROJECT No.: (FILE NO:)	CONTRACT No.:	REVIEWED BY:

***INSTRUCTIONS TO SIGN MAKER** (LIST COMPANY NAME):

QTY.	ACTION ITEMS:
	Make new sign(s)
	Follow City standards attached
	Provide submittal (drawing) to the City for project sign showing content, layout, lettering style, lettering size, and colors

VARIABLE TEXT

Line 1	Project Name:	
Line 2	Project Amount (rounded to nearest $1000):	

ATTACHMENTS INCLUDED

QTY.	SEALS / LOGOS
	City of Houston - 24" diameter
	STANDARDS
	Standard Specification Section 01580 - Project Identification Signs
	Standard Detail 01580-03 Construction Sign

(Instructions on reverse.)

INSTRUCTIONS

Contractor produces this form. Contractor shall insert the information and provide the form to the sign maker with Contractor's purchase order.

List PROJECT No., (FILE No.), CONTRACT No., and name of City's Project Manager REVIEWED BY.

INSTRUCTIONS TO SIGN MAKER:

- Give COMPANY NAME of sign maker.
- Indicate QUANTITY of new signs to be made.
- Direction for sign maker to follow City Standards in making signs.
- Require submittals from sign maker, who provides Shop Drawing of Project sign showing content, layout, lettering style, lettering size, and colors.

VARIABLE TEXT:

- Give PROJECT NAME. Write it out in all caps and suggest line break. Lines are required.
- Give Project amount to be listed on sign. Round off to nearest $1000.

ATTACHMENTS INCLUDED:

- **Seals**

  City provides the quantity of City seals required one for each Project sign.

- **Standards**

  Contractor provides set of Standards to sign maker, including (Specification Section 01580 - Project Identification Signs, and Standard Detail No. 01580-03 - Construction Sign.

Section 01581

EXCAVATION IN PUBLIC WAY PERMIT SIGNS

PART 1 GENERAL

1.01 SECTION INCLUDES

A. Project sign installation.

B. Maintenance and removal of Project sign.

1.02 SYSTEM DESCRIPTION

A. Sign Construction: Construct signs of new materials.

B. Appearance: Maintain signs to present a clean and neat look throughout the Contract duration.

C. Sign Placement: Place signs at each street entrance to street cut excavation.

1.03 SUBMITTALS

A. Submit Shop Drawings under provisions of Section 01330 - Submittal Procedures.

B. Show content, layout, lettering style, lettering size and colors. Make sign and lettering to scale, clearly indicating condensed lettering, if used.

PART 2 PRODUCTS

2.01 SIGN LAYOUT

A. Conform to Texas Manual on Uniform Traffic Control Devices. Minimum size: 36 inches by 36 inches.

B. Lettering: Uppercase Helvetica Regular lettering.

C. Composition: Include on sign copy of street cut permit, title "City of Houston", contracting department's name, address, and emergency telephone number and Contractor's name. Project Manager will provide department name, address, and emergency telephone number for preparation of sign.

PART 3 EXECUTION

3.01 INSTALLATION

A. Install Project signs before commencement of pavement excavation in Public Way.

B. Position sign so it is fully visible and readable to general public.

C. Erect sign level and plumb.

D. Erect sign so that top edge of sign is at a nominal 8 feet above existing grade.

3.02 MAINTENANCE AND REMOVAL

A. Keep signs and supports clean. Repair deterioration and damage.

B. Remove signs, framing, supports and foundations to depth of at least 2 feet upon completion of the Work. Restore area to condition equal to or better than before construction.

END OF SECTION

Section 01610

BASIC PRODUCT REQUIREMENTS

PART 1 GENERAL

1.01 SECTION INCLUDES

A. Requirements for transportation, delivery, handling, and storage of Products.

1.02 PRODUCTS

A. Products: Defined in Document 00700 – General Conditions. Does not include machinery and equipment used for preparation, fabrication, conveying and erection of the Work. Products may also include existing materials or components designated for reuse.

B. For material and equipment specifically indicated or specified to be reused in the work:

1. Use special care in removal, handling, storage and reinstallation, to assure proper function in completed work.

2. Arrange for transportation, storage and handling of products which require off-site storage, restoration or renovation. Include cost in unit price for related items.

C. When contract documents require that installation of work comply with manufacturer's printed Instructions, obtain and distribute copies of such instructions to parties involved in installation, including two copies to Project Manager. Maintain one set of complete instructions at job site during installation until completion.

D. Provide Products from the fewest number of manufacturers as practical, in order to simplify spare parts inventory and to allow for maximum interchangeability of components. For multiple components of the same size, type or application, use the same make and model of component throughout the Work.

1.03 TRANSPORTATION

A. Make arrangements for transportation, delivery, and handling of Products required for timely completion of the Work.

B. Transport and handle Products in accordance with manufacturer's instructions.

C. Consign and address shipping documents to proper party giving name of the Project and its complete street address. Shipments shall be delivered to

Contractor.

1.04 DELIVERY

A. Arrange deliveries of Products to accommodate short-term site completion schedules and in ample time to facilitate inspection prior to Installation. Avoid deliveries that cause lengthy storage or overburden of limit storage space.

B. Coordinate deliveries to avoid conflict with the Work and conditions at the site and to accommodate the following:

1. Work of other contractors or the City.

2. Limitations of storage space.

3. Availability of equipment and personnel for handling Products.

4. The City's use of premises.

C. Have Products delivered to the site in manufacturer's original, unopened, labeled containers.

D. Immediately upon delivery, inspect shipment to assure:

1. Product complies with requirements of the Contract.

2. Quantities are correct.

3. Containers and packages are intact; labels are legible.

4. Products are properly protected and undamaged.

1.05 PRODUCT HANDLING

A. Coordinate off-loading of Products delivered to the site. If necessary during construction, move and relocate stored Products at no additional cost to the City.

B. Provide equipment and personnel necessary to handle Products, including those provided by the City, by methods to prevent damage to Products or packaging.

C. Provide additional protection during handling as necessary to prevent breaking, scraping, marring, or otherwise damaging Products or surrounding areas.

D. Handle Products by methods to prevent over-bending or overstressing.

E. Lift heavy components only at designated lifting points.

F. Handle Products in accordance with manufacturer's recommendations.

G. Do not drop, roll, or skid Products off delivery vehicles. Hand-carry or use Suitable materials handling equipment.

1.06 STORAGAE OF PRODUCTS

A. Store and protect Products in accordance with manufacturer's recommendations and requirements of these Specifications.

B. Make necessary provisions for safe storage of Products. Place Products so as to prevent damage to any part of the Work or existing facilities and to maintain free access at all times to all parts of the Work and to utility service company installations in the vicinity of the Work. Keep Products neatly and compactly stored in locations that will cause minimum inconvenience to other contractors, public travel, adjoining owners, tenants, and occupants. Arrange storage in a manner so as to provide easy access for inspection.

C. Restrict storage to areas available on the site for storage of Products as shown on Drawings or approved by Project Manager.

D. Provide off-site storage and protection when on-site storage is not adequate. Provide addresses of, and access to, off-site storage locations for inspection by Project Manager.

E. Do not use lawns, grass plots, or other private property for storage purposes without written permission of owner or other person in possession or control of premises.

F. Protect stored Products against loss or damage.

G. Store in manufacturers' unopened containers.

H. Neatly, safely, and compactly stack Products delivered and stored along the line of the Work to avoid inconvenience and damage to property owners and general public, and maintain at least 3 feet clearance around fire hydrants. Keep public, private driveways and street crossings open.

I. Repair or replace damaged lawns, sidewalks, streets or other improvements to satisfaction of Project Manager. Total length that Products may be distributed along route of construction at one time is 1000 linear feet, unless otherwise approved in writing by Project Manager.

PART 2 P R O D U C T S - Not Used

PART 3 E X E C U T I O N - Not Used

END OF SECTION

Section 01630

PRODUCT SUBSTITUTION PROCEDURES

PART 1 GENERAL

1.01 SECTION INCLUDES

A. Options for making Product or process selections.

B. Procedures for proposing equivalent Products or processes, including pre-approved, pre-qualified, and approved Products or processes.

1.02 DEFINITIONS

A. Product: As defined in Document 00700 – General Conditions. Product does not include machinery and equipment used for production, fabrication, conveying, and erection of the Work. Products may also include existing materials or components designated for reuse.

B. Process: Any proprietary system or method for installing system components resulting in an integral, functioning part of the Work. For this Section, the word Products includes Processes.

1.03 SELECTION OPTIONS

A. Pre-approved Products: Construction products of certain manufacturers or Suppliers designated in Specifications as "pre-approved." The City maintains a list of pre-approved products. Pre-approved Products for this Project are designated as pre-approved in Specifications. Products of other manufacturers or suppliers are not acceptable for this Project and will not be considered under the submittal process for approving alternate products.

B. Pre-qualified Products: Construction products of certain manufacturers or Suppliers designated in Specifications as "pre-qualified." Pre-qualified Products for this Project are designated as pre-qualified in Specifications. Products of other manufacturers or suppliers are not acceptable for this Project and will not be considered under the submittal process for approving alternate products.

C. Approved Products: Construction products of certain manufacturers or Suppliers designated in Specifications followed by words "or approved equal." Approval of alternate products not listed in Specifications may be obtained through provisions for product options and substitutions in Document 00700 - General Conditions, and by following submittal procedures specified in

Section 01330- Submittal Procedures. The procedure for approval of alternate products is not applicable to pre-approved or pre-qualified products.

D. Product Compatibility: To the maximum extent possible, provide Products that are of the same type or function from a single manufacturer, make, or source. Where more than one choice is available, select Product that is compatible with other Products already selected, specified, or in use by the City.

1.04 CONTRACTOR'S RESPONSIBILITY

A. Responsibility related to Product options and substitutions is defined in Document 00700 - General Conditions.

B. Furnish information Project Manager deems necessary to judge equivalency of alternate Product.

C. Pay for laboratory testing, as well as any other review or examination costs, needed to establish equivalency between products in order to obtain information upon which Project Manager can base a decision.

D. If Project Manager determines alternate product is not equal to that named in Specifications, Furnish one of the specified Products.

1.05 CITY REVIEW

A. Use alternate Products only when approved in writing by Project Manager. Project Manager's determination regarding acceptance of proposed alternate Product is final.

B. Alternate Products shall be accepted if Products are judged by Project Manager to be equivalent to specified Product or to offer substantial benefit to the City.

C. The City retains the right to accept any Product deemed advantageous to the City, and similarly, to reject any product deemed not beneficial to City.

1.06 SUBSTITUTION PROCEDURE

A. Collect and assemble technical information applicable to the proposed Product to aid in determining equivalency as related to the approved Product specified.

B. Submit a written request for a construction Product to be considered as an alternate Product.

C. Submit Product information after the effective date of the Contract and within the time period allowed for substitution submittals given in Document 00700 - General Conditions. After the submittal period has expired, requests for alternate Products shall be considered only when specified Product becomes unavailable because of conditions beyond Contractor's control.

D. Submit five copies of each request for alternate Product approval. Include the following information:

1. Complete data substantiating compliance of proposed substitution with the Contract.

2. For Products:
   a. Product identification, including manufacturer's name and address.
   b. Manufacturer's literature with Product description, performance and test data, and reference standards.
   c. Samples, as applicable.
   d. Name and address of similar projects on which Product was used and date of installation. Include names of Owner, design consultant, and installing contractor.

3. For construction methods:
   a. Detailed description of proposed method.
   b. Drawings illustrating methods.

4. Itemized comparison of proposed substitution with Product or method specified.

5. Data relating to changes in Construction Schedule.

6. Relation to separate contracts, if any.

7. Accurate cost data on proposed substitution in comparison with Product or method specified.

8. Other information requested by Project Manager.

E. Approved alternate Products will be subject to the same review process as the specified Product would have been for Shop Drawings, Product Data, and Samples.

PART 2 P R O D U C T S - Not Used

PART 3 E X E C U T I O N - Not Used

END OF SECTION

Section 01725

FIELD SURVEYING

PART 1 GENERAL

1.01 QUALITY CONTROL

A. Conform to State of Texas laws for surveys requiring licensed surveyors. Employ a surveyor acceptable to Project Manager if required by the Contract.

1.02 MEASUREMENT AND PAYMENT

A. UNIT PRICES

1. No separate payment will be made for field surveying. Include cost in unit price for related items.

1.03 SUBMITTALS

A. Conform to requirements of Section 01330 - Submittal Procedures.

B. Submit name, address, and telephone number of Surveyor to Project Manager before starting survey work.

C. Submit documentation verifying accuracy of survey work on request.

D. Submit certificate signed by Surveyor, that elevations and locations of the Work are in conformance with the Contract.

1.04 PROJECT RECORD DOCUMENTS

A. Maintain a complete and accurate log of control and survey work as it progresses.

B. Prepare a certified survey setting forth dimensions, locations, angles, and elevations of construction and site work upon completion of foundation walls and major site improvements.

C. Submit record documents under provisions of Section 01785 - Project Record Documents.

1.05 EXAMINATION

A. Verify locations of survey control points prior to starting the Work.

B. Notify Project Manager immediately if any discrepancies are discovered.

1.06 SURVEY REFERENCE POINTS

A. The City will establish survey control datum as provided in Document 00700 - General Conditions and as indicated on Drawings. Inform Project Manager in Advance of time horizontal and vertical control points will be established so

verification deemed necessary by Project Manager may be done with minimum inconvenience to the City or Contractor.

B. Locate and protect survey control points prior to starting site work; preserve permanent reference points during construction.

C. Notify Project Manager a minimum of 48 hours before relocation of reference points is needed due to changes in grades or other reasons.

D. Promptly report loss or destruction of reference points to Project Manager.

E. Reimburse the City for cost of reestablishment of permanent reference points disturbed by construction operations.

1.07 SURVEY REQUIREMENTS

A. Utilize recognized engineering survey practices.

B. Establish a minimum of two permanent benchmarks on site, referenced to established control points. Record horizontal and vertical location data on Project record documents.

C. Establish elevations, lines and levels to provide quantities required for measurement and payment and for appropriate controls for the Work. Locate and lay out the following with appropriate instruments:

1. Site improvements including grading, fill and topsoil placement, utilities, and footings and slabs

2. Grid or axis for structures

3. Building foundation, column locations, and ground floor elevations

D. Periodically verify layouts.

PART 2 P R O D U C T S - Not Used

PART 3 E X E C U T I O N - Not Used

END OF SECTION

Section 01731

CUTTING AND PATCHING

PART 1 GENERAL

1.01 SECTION INCLUDES

A. Cutting, patching and fitting of the Work or work under construction. Coordinating Installation or connection of the Work to existing facilities, or uncovering work for access, inspection or testing and related submittals.

1.02 MEASUREMENT AND PAYMENT

A. UNIT PRICES

1. No separate payment will be made for cutting and patching. Include cost in unit price for related items.

1.03 CUTTING AND PATCHING

A. Perform activities to avoid interference with facility operations and work of others in accordance with Document 00700 - General Conditions of Contract.

B. Execute cutting and patching, including excavation, backfill and fitting to:

1. Remove and replace defective work or work not conforming to Drawings and Specifications;

2. Take samples of installed work as required for testing;

3. Remove construction required to provide for specified alterations or additions to existing work;

4. Uncover work to allow inspection or reinspection by Project Manager or regulatory agencies having jurisdiction;

5. Connect uninstalled work to completed work in proper sequence;

6. Remove or relocate existing utilities and pipes that obstruct work;

7. Make connections or alterations to existing or new facilities;

8. Provide openings, channels, chases and flues and cut, patch, and finish; if required; or

9. Provide protection for other portions of the Work.

C. Restore existing work to a condition equal to or better than that which existed Prior to cutting and patching, and to standards required by Specifications.

D. Support, anchor, attach, match, trim and seal materials to work of others. Unless otherwise specified, Furnish and Install sleeves, inserts, and hangers required for execution of the Work.

E. Provide shoring, bracing and support necessary to maintain structural integrity and to protect adjacent work from damage during cutting and patching. Request written approval from Project Manager, before cutting structural members such as beams, anchors, lintels, or other supports. Follow approved submittals, as applicable.

F. Match new materials to existing materials by bonding, lapping, mechanically tying, anchoring or other effective means in order to prevent cracks and to minimize evidence of patching. Conceal effects of demolition and patching by blending new construction to existing surfaces. Avoid obvious breaks, joints or changes of surface appearance unless shown on Drawings or authorized by Project Manager.

1.04 SUBMITTALS

A. Conform to requirements of Section 01330 - Submittal Procedures.

B. Submit a written request to Project Manager for consent to proceed, before conducting cutting operations that might affect structural integrity, design function, City operations, or work of another contractor.

C. Include the following in submittal:

1. Identification of Project

2. Description of affected work

3. Necessity for cutting

4. Effect on other work and on structural integrity

5. Describe the proposed work including:
   a. Scope of cutting and patching
   b. Contractor, Subcontractor or Supplier who will execute the work
   c. Proposed Products
   d. Extent of refinishing
   e. Schedule of operations

6. Alternatives to cutting and patching

D. When work conditions or schedules dictate the need for change of materials or methods, submit a written recommendation to Project Manager that includes:

1. conditions necessitating the change;

2. recommendations for alternative materials or methods; and

3. submittals required for proposed substitutions

E. Notify Project Manager in writing when work will be uncovered for observation. Do not begin cutting or patching operations until authorized by Project Manager.

1.05 CONNECTIONS TO EXISTING FACILITIES

A. Perform construction operations necessary to complete connections and tie-ins to existing facilities. Keep existing facilities in continuous operation unless otherwise permitted in the Specifications or approved in writing by Project Manager.

B. Coordinate interruption of service requiring connection to existing facilities with Project Manager. Do not bypass wastewater or sludge to waterways. Provide temporary pumping facilities to handle wastewater if necessary. Use temporary bulkheads to minimize disruption. Provide temporary power and piping to facilitate construction where necessary.

C. Submit a detailed schedule of proposed connections, including shut-downs and tie-ins. Include proposed time and date as well as anticipated duration of work. Coordinate the connection schedule with the construction schedule.

1. Submit specific times and dates to Project Manager at least 48 hours in advance of proposed work.

D. Procedures and Operations:

1. Operate existing pumps, valves and gates in required sequence under supervision of Project Manager. Do not operate valves, gates or other items of equipment without Project Manager's knowledge.

2. If possible, test equipment under operating conditions before making final tie-ins to connect equipment to existing facility.

3. Coordinate work and schedules. Notify Project Manger at least 48 Hours before shutdowns or bypasses are required.

PART 2 P R O D U C T S Not Used

PART 3 E X E C U T I O N Not Used

END OF SECTION

Section 01740

SITE RESTORATION

PART 1 GENERAL

1.01 SECTION INCLUDES

A. Restoration of site affected by the Work in public or private property, including pavement, esplanades, sidewalks, driveways, fences, lawns and landscaping.

1.02 MEASUREMENT AND PAYMENT

A. Unit Prices.

1. Payment for restoration of Project site disturbed by utility construction operations is on a linear foot basis. Measurement will be as provided for corresponding utility in each Specification section. No separate payment made for branch pipe, valves and, other associated work for utilities. Measurement for restoration with multiple utilities within the same right-of-way will be on a linear foot basis for only one utility.

2. No separate payment made for facility or roadway projects. Include cost in the surface improvements associated with the facility or roadway construction.

3. Payment includes required site restoration within the right-of-way or easement regardless of size or type of pipe, method of construction, paved or unpaved areas or thickness and width of pavement.

4. No separate payment made for site restoration for service connections under this Section. Include cost in appropriate utility section.

5. Refer to Section 01270 – Measurement and Payment for Unit Price procedures.

B. Stipulated Price (Lump Sum) Contracts. If Contract is Stipulated Price Contract, include payment for work under this section in total Stipulated Price.

1.03 DEFINITIONS

A. Phase: Locations identified on the plans and listed in Section 1110 – Summary of Work under Work Sequence.

B. Site Restoration: Replacement or reconstruction of Site Improvements located in rights-of-way, easements, public property, and private property affected or altered by the Work.

C. Site Improvement: Includes pavement, curbs and gutters, esplanades, sidewalks, driveways, fences, lawns, irrigation systems, landscaping, and other improvements in existence at the Project site before commencement of construction operations.

1.04 SUBMITTALS

A. Conform to requirements of Section 01330 - Submittal Procedures.

B. Schedule of testing, service connections, abandonment, backfill, and site restoration.

C. Sample of notices to residents outlining their responsibility for maintenance of site improvements adjacent to the Project that are not disturbed by construction operations

1.05 SCHEDULING

A. Schedule testing, service connections, abandonment, backfill and site restoration immediately following completion of pipe laying work or paving within each block or line segment.

B. Phased Construction:

1. Commencement of subsequent Phase will follow scheduling of site restoration of prior Phase. Limit work to a maximum of two Phases of the project.

C. Construction of Projects with no Phases listed in Section 01110- Summary of Work:

1. Complete site restoration prior to disturbing over 50% of total project linear feet or 2,000 linear feet, whichever is greater, of right-of-way or easement.

2. Limit work to a maximum of 50% of total project linear feet or 2,000 linear feet, whichever is greater, of right-of-way and easement. Commence work in additional right-of-way or easement after completion of site restoration.

PART 2 PRODUCTS

2.01 MATERIALS

A. Pavement, Sidewalks and Driveways: Materials specified in Section 02951 - Pavement Repair and Resurfacing.

B. Seeding and Sodding: Sod specified in Section 02922 - Sodding and Seed specified in Section 02921 - Hydromulch Seeding.

C. Trees, Shrubs and Plantings: Conform to requirements of Section 01562 – Tree and Plant Protection.

PART 3 EXECUTION

3.01 Preparatory Work

A. Provide cleanup and restoration crews to work closely behind pipe laying and roadway construction crews, and where necessary, during testing, service restoration, abandonment, backfill and surface restoration.

B. Water Lines: Unless otherwise approved by Project Manager, comply with the following:

1. Once Project Manager approves work within a Phase, immediately begin preparatory work for disinfection effort.

2. No later than three days after completing disinfection preparatory work, submit to City appropriate request for disinfection.

3. If City fails to perform initial disinfection of lines in accordance with Section 2514 - Disinfection of Water Lines, within seven days from submission of appropriate request, and if approved by Project Manager, pipe laying operations may continue beyond approved limits until the City responds.

4. Immediately after transfer of services, begin abandonment of old water lines and site restoration.

C. Wastewater Lines:

1. Once Project Manager approves work within a Line Segment, immediately begin preparatory work for testing effort.

2. No later than three days after completing preparatory work for testing, initiate testing work.

3. Immediately after transfer of service connections, begin abandonment of old wastewater lines, and site restoration.

D. Street Construction and Paving Projects

1. Once Project Manager approves work within a Line Segment or block, immediately begin preparatory work for testing effort.

2. No later than three days after completing preparatory work for testing, initiate testing work.

3. Immediately after testing begin site restoration.

E. Street Construction and Paving Projects

1. Once Project Manager approves work within a block, immediately begin preparatory work for sidewalk construction, sodding and hydromulching and tree planting.

2. No later than seven days after completing preparatory work, initiate construction.

3.02 CLEANING

A. Remove debris and trash to maintain a clean and orderly site in accordance with requirements of General Conditions and Section 01576 - Waste Material Disposal.

3.03 LANDSCAPING AND FENCES

A. Seeding and Sodding.

1. Remove construction debris and level area with bank sand so that new grass surface matches level of existing grass and maintains pre-construction drainage patterns. Level and fill minor ruts or depressions caused by construction operations with bank sand, where grass is still viable.

2. Restore previously existing turfed areas with sod and fertilize in accordance with Section 02922 - Sodding. Sod to match existing turf.

3. Restore unpaved areas not requiring sodding with hydromulch seeding conforming to Section 02921 - Hydromulch Seeding.

B. Trees, Shrubbery and Plants.

1. Remove and replant trees, shrubs, and plants in accordance with requirements of Section 01562 – Tree and Plant Protection.

C. Fence Replacement.

1. Replace removed or damaged fencing to equal or better condition than existed prior to construction, including concrete footings and mow strips. Provide new wood posts, top and bottom railing and panels. Metal fencing material, not damaged by the Work, may be reused.

2. Remove and dispose of damaged or substandard material.

3.04 MAINTENANCE

A. Maintain shrubs, plantings, sodded areas and seeded areas.

B. Replace shrubs, plantings and seeded or sodded areas that fail to become established.

C. Refer to Section 01562 - Tree and Plant Protection, Section 02921 - Hydromulch Seeding and Section 02922 - Sodding for maintenance requirements.

END OF SECTION

Section 01770

CLOSEOUT PROCEDURES

PART 1 GENERAL

1.01 SECTION INCLUDES

A. Procedures to establish Date of Substantial Completion.

B. Closeout procedures for final submittals, O&M data, warranties, spare parts and maintenance materials.

C. Texas Department of Licensing and Regulation (TDLR) inspection for Texas Accessibility Standards (TAS) compliance.

1.02 SUBSTANTIAL COMPLETION

A. Comply with Document 00700 - General Conditions regarding Date of Substantial Completion when Contractor considers the Work, or portion thereof designated by Project Manager, to be substantially complete.

B. Insure the following items have been completed when included in the Work, prior to presenting a list of items to be inspected by Project Manager for issuance of a Certificate of Substantial Completion:

1. cutting, plugging, and abandoning of water, wastewater, and storm sewer lines, as required by Contract documents for each item;

2. construction of, and repairs to, pavement, driveways, sidewalks, and curbs and gutters;

3. sodding and hydromulch seeding, unless waived by Project Manager in writing;

4. general clean up including pavement markings, transfer of services, successful testing and landscape;

5. additional requirements contained in Section 01110 - Summary of Work.

C. Assist Project Manager with inspection of Contractor's list of items and complete or correct the items, including items added by Project Manager, within specified time period.

D. Should Project Manager's inspection show failure of Contractor to comply with requirements to obtain Date of Substantial Completion, including those items in Paragraph 1.02 B. of this section, Contractor shall complete or correct the items, before requesting another inspection by Project Manager.

1.03 CLOSEOUT PROCEDURES

A. Comply with Document 00700 - General Conditions regarding final completion and final payment when the Work is complete and ready for Project Manager's final inspection.

B. Provide Project Record Documents in accordance with Section 01785 - Project Record Documents.

C. Complete or correct items on punch list, with no new items added. Address new items during warranty period.

D. The City will occupy portions of the Work as specified in other sections.

1.04 FINAL CLEANING

A. Execute final cleaning prior to final inspection.

B. For facilities, clean interior and exterior glass and surfaces exposed to view; remove temporary labels, stains and foreign substances, polish transparent and glossy surfaces, vacuum carpeted and soft surfaces.

C. Clean equipment and fixtures to sanitary condition.

D. Clean or replace filters of operating equipment.

E. Clean debris from roofs, gutters, down spouts, and drainage systems.

F. Clean site; sweep paved areas, and rake clean landscaped surfaces.

G. Remove waste and surplus materials, rubbish, and temporary construction facilities from site following final test of utilities and completion of the Work.

1.05 ADJUSTING

A. Adjust operating equipment to ensure smooth and unhindered operation. Value of this testing and adjusting is five percent of Lump Sum Price in the Schedule of Values for item being tested.

1.06 OPERATION AND MAINTENANCE DATA

A. Submit O&M data as noted in Section 01330 - Submittal Procedures.

B. Five percent of lump sum amount of each piece of equipment as indicated in Schedule of Unit Price Work or Schedule of Values will be paid after the required O&M data submittals are received and approved by Project Manager.

1.07 WARRANTIES

A. Provide one original of each warranty from Subcontractors, Suppliers, and manufacturers.

B. Provide Table of Contents and assemble warranties in a 3-ring/D binder with durable plastic cover.

C. Submit warranties prior to final progress payment.

D. Warranties shall commence in accordance with the requirements in Document 00700 - General Conditions.

1.08 SPARE PARTS AND MAINTENANCE MATERIALS

A. Provide Products, spare parts, maintenance and extra materials in quantities specified in individual Specification sections.

B. Deliver to a location within the City limits as directed by Project Manager. Applicable items must be delivered prior to issuance of a final Certificate for Payment.

PART 2 P R O D U C T S - Not Used

PART 3 E X E C U T I O N - Not Used

END OF SECTION

Section 01785

PROJECT RECORD DOCUMENTS

PART 1 GENERAL

1.01 SECTION INCLUDES

A. Maintenance and submittal of record documents and Samples.

1.02 MAINTENANCE OF DOCUMENTS AND SAMPLES

A. Maintain one record copy of documents at the site in accordance with Document 00700 - General Conditions.

B. Store record documents and Samples in field office, if a field office is required by the Contract, or in a secure location. Provide files, racks, and secure storage for record documents and Samples.

C. Label each document "PROJECT RECORD" in neat, large, printed letters.

D. Maintain record documents in a clean, dry, and legible condition. Do not use record documents for construction purposes. Do not use permit drawings to record Modifications to the Work.

E. Keep record documents and Samples available for inspection by Project Manager.

F. Bring record documents to progress review meetings for viewing by Project Manager and, if applicable, Design Consultant.

1.03 RECORDING

A. Record information legibly with red ink pen on a set of blueline opaque drawings, concurrently with construction progress. Maintain an instrument on site at all times for measuring elevations accurately. Do not conceal work until required information is recorded

B. Contract Drawings and Shop Drawings: Mark each item to record completed Modifications, or when minor deviations exist, the actual construction including:

1. Measured depths of elements of foundation in relation to finish first floor datum.
2. Measured horizontal locations and elevations of Underground Facilities and appurtenances, referenced to permanent surface improvements.

3. Elevations of Underground Facilities referenced to City of Houston benchmark utilized for the Work.

4. Measured locations of internal utilities and appurtenances concealed in construction, referenced to visible and accessible features of the Work.

5. Dimensions and details of field changes

6. Changes made by Modifications.

7. Details not on original Drawings.

8. References to related Shop Drawings and Modifications.

C. Survey all joints of water mains at the time of construction. Record on Drawings, water main invert elevation, elevation top of manway, and centerline horizontal location relative to baseline.

D. For large diameter water mains, mark specifications and addenda to record:

1. Manufacturer, trade name, catalog number and Supplier of each Product actually Installed.

2. Changes made by Modification or field order.

3. Other matters not originally specified.

E. Annotate Shop Drawings to record changes made after review.

1.04 SUBMITTALS

A. At closeout of the Contract, deliver Project record documents to Project Manager.

PART 2 P R O D U C T S - Not Used

PART 3 E X E C U T I O N - Not Used

END OF SECTION

Section 02233

CLEARING AND GRUBBING

PART 1 GENERAL

1.01 SECTION INCLUDES

A. Removing surface debris and rubbish.

B. Clearing site of plant life and grass.

C. Removing trees and shrubs.

D. Removing root system of trees and shrubs.

E. Fence removal.

1.02 MEASUREMENT AND PAYMENT

A. Unit Prices.

1. Payment for clearing and grubbing is on per acre basis.

2. No separate payment will be made for clearing and grubbing of wastewater projects, include payment in unit prices for related items.

3. Refer to Section 01270 - Measurement and Payment for unit price procedures.

B. Stipulated Price (Lump Sum). If Contract is Stipulated Price Contract, payment for work in this Section is included in total Stipulated Price.

1.03 REGULATORY REQUIREMENTS

A. Conform to applicable codes for disposal of debris.

B. Coordinate clearing work with utility companies.

PART 2 PRODUCTS - Not Used

PART 3 EXECUTION

3.01 PREPARATION

A. Verify that existing plant life and features designated to remain are identified and tagged.

3.02 PROTECTION

A. Protect following from damage or displacement:

1. Living trees located 3 feet or more outside of intersection of side slopes and original ground line.

2. Plants other than trees and landscape features designated to remain.

3. Utilities designated to remain.

4. Bench marks, monuments, and existing structures designated to remain.

3.03 CLEARING

A. Remove stumps, main root ball, and root system to:

1. Depth of 24 inches below finished subgrade elevation in area bounded by lines two feet behind back of curbs.

2. Depth of 24 inches below finished surface of required cross section for other areas.

B. Clear undergrowth and deadwood without disturbing subsoil.

C. Remove vegetation from top soil scheduled for reuse.

3.04 REMOVAL

A. Remove debris, rubbish, and extracted plant material life from site in accordance with requirements of Section 01576 - Waste Material Disposal.

B. Remove on site fences. Materials generated from removal of fences become property of Contractor. Properly dispose of in accordance with applicable local, state and federal laws.

END OF SECTION

Section 02260

TRENCH SAFETY SYSTEM

PART GENERAL

1.01 SECTION INCLUDES

A. Trench safety system for the construction of trench excavations.

B. Trench safety system for structural excavations which fall under provisions of State and Federal trench safety laws.

C. This Standard Specification Section replaces previously published Section 01561-Trench Safety System.

1.02 MEASUREMENT AND PAYMENT

A. Unit Prices:

1. Measurement for trench safety systems used on trench excavations is on a linear foot basis measured along the centerline of the trench, including manholes and other line structures.

2. No payment will be made under this section for trench safety systems for structural excavations, tunnel shafts, auger pits, or excavation for trenchless installations, and also for any necessary non trenchless installations included in the aforementioned methods of construction unless included as a bid item in Documents 00410 – Bid Form. Include payment for trench safety systems in applicable structural or utility installation sections.

3. Refer to Section 01270 - Measurement and payment for unit price procedures.

B. Stipulated Price (Lump Sum). If the Contract is a Stipulated Price Contract, payment for work in this Section is included in the total Stipulated Price.

1.03 DEFINITIONS

A. A trench shall be defined as a narrow excavation (in relation to its depth) made below the surface of the ground. In general, the depth is greater than the width, but the width of a trench (measured at the bottom) is not greater than 15 feet.

B. The trench safety system requirements will apply to larger open excavations if the erection of structures or other installations limits the space between the excavation slope and these installation to dimensions equivalent of a trench as defined.

C. Trench Safety Systems include but are not limited to sloping, sheeting, trench boxes or trench shields, sheet piling, cribbing, bracing, shoring, dewatering or diversion of water to provide adequate drainage.

D. Trench Safety Program is the safety procedures governing the presence and activities of individuals working in and around trench excavations.

1.04 SUBMITTALS

A. Submittals shall conform to requirements of Section 01330 - Submittal Procedures.

B. Submit a safety program specifically for the construction of trench excavation. Design the trench safety program to be in accordance with OSHA 29CFR standards governing the presence and activities of individuals working in and around trench excavations.

C. Construction and shop drawings containing deviations from OSHA standards or special designs shall be sealed by a licensed Engineer retained and paid by Contractor.

D. Review of the safety program by the City Engineer will only be in regard to compliance with this specification and will not constitute approval by the City Engineer nor relieve Contractor of obligations under State and Federal trench safety laws.

E. Submit certification that trench safety system will not be subjected to loads exceeding those which the system was designed to withstand according to the available construction and geotechnical information.

1.05 REGULATORY REQUIREMENTS

A. Install and maintain trench safety systems in accordance with the detail specifications set out in the provision of Excavations, Trenching, and Shoring, Federal Occupation Safety and Health Administration (OSHA) Standards, 29CFR, Part 1926, Subpart P, as amended, including Final Rule, published in the Federal Register Vol. 54, No. 209 on Tuesday, October 31, 1989. The sections that are incorporated into these specifications by reference include Sections 1926-650 through 1926-652.

B. A reproduction of the OSHA standards included in "Subpart P - Excavations" from the Federal Register Vol. 54, No. 209 is available upon request to Contractors bidding on City projects. The City assumes no responsibility for the accuracy of the reproduction. The Contractor is responsible for obtaining a copy of this section of the Federal Register.

C. Legislation that has been enacted by the Texas Legislature with regard to Trench Safety Systems, is hereby incorporated, by reference, into these specifications. Refer to Texas Health and Safety Code Ann., §756.021 (Vernon 1991).

D. Reference materials, if developed for a specific project, will be issued with the Bid Documents, including the following:

1. Document 00830 - Trench Safety Geotechnical Information: Geotechnical information obtained for use in design of the trench safety system.

1.06 INDEMNIFICATION

A. Contractor shall indemnify and hold harmless the City, its employees and agents, from any and all damages, costs (including, without limitation, legal fees, court costs, and the cost of investigation), judgements or claims by anyone for injury or death of persons resulting from the collapse or failure of trenches constructed under this Contract.

B. Contractor acknowledges and agrees that this indemnity provision provides indemnity for the City in case the City is negligent either by act or omission in providing for trench safety, including, but not limited to safety program and design reviews, inspections, failures to issue stop work orders, and the hiring of the Contractor.

PART PRODUCTS - Not Used

PART EXECUTION

3.01 INSTALLATION

A. Install and maintain trench safety systems in accordance with provisions of OSHA 29CFR.

B. Install specially designed trench safety systems in accordance with the Contractor's trench excavation safety program for the locations and conditions identified in the program.

C. A competent person, as identified in the Contractor's Trench Safety Program, shall verify that trench boxes and other premanufactured systems are certified for the actual installation conditions.

3.02 INSPECTION

A. Contractor, or Contractor's independently retained consultant, shall make daily inspections of the trench safety systems to ensure that the installed systems and operations meet OSHA 29CFR and other personnel protection regulations requirements.

B. If evidence of possible cave-ins or slides is apparent, Contractor shall immediately stop work in the trench and move personnel to safe locations until the necessary precautions have been taken by Contractor to safeguard personnel entering the trench.

C. Maintain a permanent record of daily inspections.

3.03 FIELD QUALITY CONTROL

A. Contractor shall verify specific applicability of the selected or specially designed trench safety systems to each field condition encountered on the project.

END OF SECTION

Section 02315

ROADWAY EXCAVATION

PART 1 GENERAL

1.01 SECTION INCLUDES

A. Excavation and compaction of materials for roadways.

B. Excavation and compaction of materials for roadside ditches.

1.02 MEASUREMENT AND PAYMENT

A. Unit Prices.

1. Payment for roadway excavation, with or without subgrade, is on cubic yard basis. Unless specified otherwise under the borrow (off-site) material or embankment fill work item, measurement for payment shall be based on the cut quantity shown on the drawing.

2. No payment will be made for material excavated under the following conditions:

   a. More than 2 feet outside of vertical planes behind back of curbs

   b. For portion within limits of trench for utilities 24-inch and greater constructed by open-cut methods

   c. As indicated otherwise on Drawings.

3. Measurement for the bid item "Regrade Ditches" is on a linear foot basis. No separate payment will be made for reshaping and regrading roadway ditch shoulder slope and side slope adjacent to installed temporary pavement upon removal of temporary pavement.

4. If specified, off-site borrow material including placement and compaction will be paid by final in-place quantity on cubic yard basis.

5. If specified and shown on the drawing, embankment fill including placement and compaction will be paid by final in-place quantity on cubic yard basis.

6. Refer to Section 01270 - Measurement and Payment for unit price procedures.

B. Stipulated Price (Lump Sum). If Contract is Stipulated Price Contract, payment for work in this Section is included in total Stipulated Price.

1.03 REFERENCES

A. ASTM D 698 - Standard Test Method for Laboratory Compaction Characteristics of Soil Using Standard Effort (12.44 ft-lbf/ft^3).

B. ASTM D 2216 - Standard Test Method for Laboratory Determination of Water (Moisture) Content of Soil and Rock by Mass.

C. ASTM D 2922 - Standard Test Methods for Density of Soil and Soil-Aggregate in Place by Nuclear Methods (Shallow Depth).D. ASTM D 3017 - Standard Test Method for Water content of Soil and Rock in Place by Nuclear Methods (Shallow Depth).

E. ASTM D 4318 - Standard Test Methods for Liquid Limit, Plastic Limit, and Plasticity Index of Soils.

PART 2 PRODUCTS

2.01 MATERIALS

A. Provide topsoil conforming to requirements of Section 02911 - Topsoil.

B. Provide backfill which is excavated material, graded free of roots, lumps greater than 6 inches, rocks larger than 3 inches, organic material, and debris.

C. Provide structural backfill which is select material meeting following requirements:

1. Plasticity index: not less than 12 nor more than 20.

2. Maximum liquid limit: 45

PART 3 EXECUTION

3.01 PREPARATION

A. Identify required lines, levels, and datum. Coordinate with Section 01725 - Field Surveying.

B. Identify and flag surface and aerial utilities.

C. Notify utility companies to remove or relocate utilities.

D. Identify, stake, and flag known utility locations below grade. Make temporary or permanent relocation of underground pipes, ducts, or utilities where indicated on Drawings.

E. Upon discovery of unknown or badly deteriorated utilities, or concealed conditions, discontinue work. Notify Project Manager and obtain instructions before proceeding in such areas.

F. Obtain approval of top soil quality before excavating and stockpiling.

3.02 PROTECTION

A. Protect following from damage or displacement:

1. Trees, shrubs, lawns, existing structures, and other features outside of grading limits.

2. Utilities either above or below grade, which are to remain.

3.03 TOPSOIL REMOVAL

A. Strip off topsoil from area to be excavated to minimum depth of 6 inches, unless indicated otherwise on Drawings.

B. Stockpile topsoil in designated location for reuse. Stockpile topsoil to depth not exceeding 8 feet. Cover to protect from erosion.

3.04 SOIL EXCAVATION

A. Excavate to lines and grades shown on Drawings.

B. Remove unsuitable material not meeting specifications. Backfill with embankment materials and compact to requirements of Section 02330 - Embankment.

C. Record location and plug and fill inactive water and oil wells. Conform to Texas Department of Health, Texas Natural Resource Conservation Commission, and Texas Railroad Commission requirements. Notify Project Manager prior to plugging wells.

D. At intersections, grade back at minimum slope of one inch per foot. Produce smooth riding junction with intersecting street. Maintain proper drainage.

E. When area is inadvertently over excavated, fill area in accordance with requirements of Section 02330 - Embankment at no additional cost to City.

F. Remove material not qualified for use and excess soil not being reused from site in accordance with requirements of Section 01576 - Waste Material Disposal.

3.05 COMPACTION

A. Maintain optimum moisture content of subgrade to attain required density.

B. Compact to following minimum densities at moisture content of optimum to 3 percent above optimum as determined by ASTM D 698, unless otherwise indicated on Drawings:

1. Areas under future paving and shoulders: Minimum density of 95 percent of maximum dry density.

2. Other areas: Minimum density of 90 percent of maximum dry density.

3.06 TOLERANCES

A. Top of Compacted Surface: Plus or minus 1/2 inch in cross section, or in 16-foot length.

3.07 FIELD QUALITY CONTROL

A. Testing will be performed under provisions of Section 01454 - Testing Laboratory Services.

B. Test and analysis of soil materials will be performed in accordance with ASTM D 4318, ASTM D 2216, and ASTM D 698.

C. Compaction testing will be performed in accordance with ASTM D 698 or ASTM D 2922 and ASTM D 3017.

D. A minimum of three tests will be taken for each 1000 linear feet per lane of roadway.

E. When tests indicate work does not meet specified compaction requirements, recondition, recompact, and retest at no additional cost to City.

3.08 PROTECTION

A. Prevent erosion at all times. Maintain ditches and cut temporary swales to allow natural drainage in order to avoid damage to roadway. Do not allow water to pond.

B. Distribute construction traffic evenly over compacted areas, where practical, to aid in obtaining uniform compaction. Protect exposed areas having high moisture content from wheel loads that cause rutting.

C. Maintain excavation and embankment areas until start of subsequent work. Repair and recompact slides, washouts, settlements, or areas with loss of density.

END OF SECTION

Section 02316

EXCAVATION AND BACKFILL FOR STRUCTURES

PART 1 GENERAL

1.01 SECTION INCLUDES

A. Excavation, backfilling, and compaction of backfill for structures.

1.02 MEASUREMENT AND PAYMENT

A. Unit Prices.

1. No payment will be made for structural excavation and backfill under this Section. Include payment in unit price or lump sum for construction of structures.

2. Refer to Section 01270 - Measurement and Payment for unit price procedures.

B. Stipulated Price (Lump Sum). If Contract is Stipulated Price Contract, payment for work in this Section is included in total Stipulated Price.

1.03 DEFINITIONS

A. Unsuitable Material: Unsuitable soil materials are the following:

1. Materials that are classified as ML, CL-ML, MH, PT, OH, and OL according to ASTM D 2487.

2. Materials that cannot be compacted to required density due to gradation, plasticity, or moisture content.

3. Materials that contain large clods, aggregates, stones greater than 4 inches in any dimension, debris, vegetation, waste or any other deleterious materials.

4. Materials that are contaminated with hydrocarbons or other chemical contaminants.

B. Suitable Material: Suitable soil materials are those meeting specification requirements. Unsuitable soils meeting specification requirements for suitable soils after treatment with lime or cement shall be considered suitable, unless otherwise indicated.

C. Select Material: Material as defined in Section 02320 - Utility Backfill Materials.

D. Backfill: Material meeting specified quality requirements, placed and compacted under controlled conditions around structures.

E. Foundation Backfill Materials: Natural soil or manufactured aggregate meeting Class I requirements and geotextile filter fabrics as required, to control drainage and material separation. Foundation backfill material is placed and compacted as backfill where needed to provide stable support for structure foundation base. Foundation backfill materials may include concrete fill and seal slabs.

F. Foundation Base: For foundation base material, use crushed stone aggregate with filter fabric as required, cement stabilized sand, or concrete seal slab. Foundation base provides smooth, level working surface for construction of concrete foundation.

G. Foundation Subgrade: Foundation subgrade is surface of natural soil which has been excavated and prepared to support foundation base or foundation backfill, where needed.

H. Ground Water Control Systems: Installations external to excavation such as well points, eductors, or deep wells. Ground water control includes dewatering to lower ground water, intercepting seepage which would otherwise emerge from side or bottom of excavation, and depressurization to prevent failure or heaving of excavation bottom. Refer to Section 01578 - Control of Ground Water and Surface Water.

I. Surface Water Control: Diversion and drainage of surface water runoff and rain water away from excavation. Remove rain water and surface water which accidentally enters excavation as part of excavation drainage.

J. Excavation Drainage: Removal of surface and seepage water in excavation by sump pumping and using French drains surrounding foundation to intercept water.

K. Over-Excavation and Backfill: Excavation of subgrade soils with unsatisfactory bearing capacity or composed of otherwise unsuitable materials below foundation as shown on Drawings, and backfilled with foundation backfill material.

L. Shoring System: Structure that supports sides of an excavation to maintain stable soil conditions and prevent cave-ins.

1.04 REFERENCES

A. ASTM D 698 - Standard Test Methods for Laboratory Compaction of Soil Using Standard Effort (12,400 ft-lbf/ft^3 (600kN-m/m^3)).

B. ASTM D 1556 - Standard Test Method for Density of Soil in Place by Sand-Cone Method.

C. ASTM D 2922 - Standard Test Methods for Density of Soil and Rock in Place by Nuclear Methods (Shallow Depth).

D. ASTM D 3017 - Standard Test Method for Water Content of Soil and Soil-Aggregate in Place by Nuclear Methods (Shallow Depths).

E. ASTM D 4318 - Standard Test Method for Liquid Limit, Plastic Limit, and Plasticity Index of Soils.

F. TxDOT Tex-101-E - Preparing Soil and Flexible Base Materials for Testing.

G. TxDOT Tex-110-E - Particle Size Analysis of Soils.

H. Federal Regulations, 29 CFR, Part 1926, Standards - Excavation, Occupational Safety and Health Administration (OSHA).

1.05 SUBMITTALS

A. Conform to requirements of Section 01330 - Submittal Procedures.

B. Submit work plan for excavation and backfill for each structure with complete written description which identifies details of proposed method of construction and sequence of operations for construction relative to excavation and backfill activities. Use descriptions, with supporting illustrations, sufficiently detailed to demonstrate to Project Manager that procedures meet requirements of Specifications and Drawings.

C. Submit excavation safety system plan.

1. Submit excavation safety system plan in accordance with applicable OSHA requirements for excavations.

2. Submit excavation safety system plan in accordance with requirements of Section 02260 - Trench Safety System, for excavations that fall under State and Federal trench safety laws.

D. Submit ground and surface water control plan in accordance with requirements in this Section and Section 01578 - Control of Ground Water and Surface Water.

E. Submit backfill material sources and product quality information in accordance with requirements of Section 02320 - Utility Backfill Materials.

F. Submit project record documents under provisions of Section 01785 - Project Record Documents. Record location of utilities, as installed, referenced to survey benchmarks. Include location of utilities encountered or rerouted. Give horizontal dimensions, elevations, inverts and gradients.

1.06 TESTS

A. Testing and analysis of backfill materials for soil classification and compaction during construction will be performed by an independent laboratory provided by City in accordance with requirements of Section 01454 - Testing Laboratory Services and as specified in this Section.

B. Perform embedment and backfill material source qualification testing in accordance with requirements of Section 02320- Utility Backfill Materials.

PART 2 PRODUCTS

2.01 EQUIPMENT

A. Perform excavation with equipment suitable for achieving requirements of this Specification.

B. Use equipment which will produce degree of compaction specified. Compact backfill within 3 feet of walls with hand operated equipment. Do not use equipment weighing more than 10,000 pounds closer to walls than a horizontal distance equal to depth of fill at that time. Use hand operated power compaction equipment where use of heavier equipment is impractical or restricted due to weight limitations.

2.02 MATERIAL CLASSIFICATIONS

A. Use backfill materials conforming to classifications and product descriptions of Section 02320 - Utility Backfill Materials. Use classification or product description for backfill applications as shown on Drawings and as specified.

PART 3 EXECUTION

3.01 PREPARATION

A. Conduct an inspection to determine condition of existing structures and other permanent installations.

B. Set up necessary street detours and barricades in preparation for excavation if construction will affect traffic. Conform to requirements of Section 01555 - Traffic Control and Regulation. Maintain barricades and warning devices at all times for streets and intersections where work is in progress, or where construction work is considered hazardous to traffic movements.

C. Perform work in accordance with OSHA standards. Employ an excavation safety system as specified in Section 02260 - Trench Safety Systems.

D. Remove existing pavements and structures, including sidewalks and driveways, in accordance with requirements of Section 02221 - Removing Existing Pavements and Structures.

E. Install and operate necessary dewatering and surface water control measures in accordance with requirements of Section 01578 - Control of Ground Water and Surface Water.

3.02 PROTECTION

A. Protect trees, shrubs, lawns, existing structures, and other permanent objects outside of grading limits and within grading limits as designated on Drawings, and in accordance with requirements of Section 01562 - Tree and Plant Protection.

B. Protect and support above-grade and below-grade utilities which are to remain.

C. Restore damaged permanent facilities to pre-construction conditions unless replacement or abandonment of facilities is indicated on Drawings.

D. Prevent erosion of excavations and backfill. Do not allow water to pond in excavations.

E. Maintain excavation and backfill areas until start of subsequent work. Repair and recompact slides, washouts, settlements, or areas with loss of density at no additional cost to City.

3.03 EXCAVATION

A. Perform excavation work so that underground structure can be installed to depths and alignments shown on Drawings. Use caution during excavation work to avoid disturbing surrounding ground and existing facilities and improvements. Keep excavation to absolute minimum necessary. No additional payment will be made for excess excavation not authorized by Project Manager.

B. Upon discovery of unknown utilities, badly deteriorated utilities not designated for removal, or concealed conditions, discontinue work at that location. Notify Project Manager and obtain instructions before proceeding in such areas.

C. Immediately notify agency or company owning any line which is damaged, broken or disturbed. Obtain approval from Project Manager and agency for any repairs or relocations, either temporary or permanent.

D. Avoid settlement of surrounding soil due to equipment operations, excavation procedures, vibration, dewatering, or other construction methods.

E. Provide surface drainage during construction to protect work and to avoid nuisance to adjoining property. Where required, provide proper dewatering and piezometric pressure control during construction.

F. Conduct hauling operations so that trucks and other vehicles do not create dirt nuisance in streets. Verify that truck beds are sufficiently tight and loaded in such a manner such that objectionable materials will not spill onto streets. Promptly clear away any dirt, mud, or other materials that spill onto streets or are deposited onto streets by vehicle tires.

G. Maintain permanent benchmarks, monumentation, and other reference points. Unless otherwise directed, replace those which are damaged or destroyed by Work.

H. Provide sheeting, shoring, and bracing where required to safely complete Work, to prevent excavation from extending beyond limits indicated on Drawings, and to protect Work and

adjacent structures or improvements. Use sheeting, shoring, and bracing to protect workmen and public conforming to requirements of Section 02260 - Trench Safety Systems.

I. Prevent voids from forming outside of sheeting. Immediately fill voids with grout, cement stabilized sand, or other material approved by Project Manager and compact to 95 percent standard density.

J. After completion of structure, remove sheeting, shoring, and bracing unless shown on Drawings to remain in place or directed by Project Manager in writing that such temporary structures may remain. Remove sheeting, shoring and bracing in such a manner as to maintain safety during backfilling operations and to prevent damage to Work and adjacent structures or improvements.

K. Immediately fill and compact voids left or caused by removal of sheeting with cement stabilized sand or other material approved by Project Manager and compact to 95 percent standard density.

3.04 HANDLING EXCAVATED MATERIALS

A. Classify excavated materials. Place material which is suitable for use as backfill in orderly piles at sufficient distance from excavation to prevent slides or cave-ins.

B. Provide additional backfill material in accordance with requirements of Section 02319 - Borrow, if adequate quantities of suitable material are not available from excavation and trenching operations at site.

3.05 DEWATERING

A. Provide ground water control per Section 01578 - Control of Ground Water and Surface Water.

B. Keep ground water surface elevation minimum of 2 feet below bottom of foundation base.

C. Maintain ground water control as directed by Section 01578 - Control of Ground Water and Surface Water and until structure is sufficiently complete to provide required weight to resist hydrostatic uplift with minimum safety factor of 1.2.

3.06 FOUNDATION EXCAVATION

A. Notify Project Manager at least 48 hours prior to planned completion of foundation excavations. Do not place foundation base until excavation is accepted by Project Manager.

B. Excavate to elevations shown on Drawings, as needed to provide space for foundation base, forming level undisturbed surface, free of mud or soft material. Remove pockets of soft or otherwise unstable soils and replace with foundation backfill material or material as directed by Project Manager. Prior to placing material over it, recompact subgrade where indicated on

Drawings, scarifying as needed, to 95 percent of maximum Standard Dry Density according to ASTM D 698. If specified level of compaction cannot be achieved, moisture condition subgrade and recompact until 95 percent is achieved, over-excavate to provide minimum layer of 24 inches of foundation backfill material, or other means acceptable to Project Manager.

C. Fill unauthorized excessive excavation with foundation backfill material or other material as directed by Project Manager.

D. Protect open excavations from rainfall, runoff, freezing groundwater, or excessive drying so as to maintain foundation subgrade in satisfactory, undisturbed condition. Keep excavations free of standing water and completely free of water during concrete placement.

E. Remove soils which become unsuitable due to inadequate dewatering or other causes, after initial excavation to required subgrade, and replace with foundation backfill material, as directed by Project Manager, at no additional cost to City.

F. Place foundation base, or foundation backfill material where needed, over subgrade on same day that excavation is completed to final grade. Where base of excavations are left open for longer periods, protect them with seal slab or cement-stabilized sand.

G. Use filter fabric as specified in Section 02621 - Geotextile to separate crushed aggregate, and other free draining Class I materials from native soils or select material backfill. Overlap fabric minimum of 12 inches beyond where another material stops contact with soil.

H. Place crushed aggregate, and other Class I materials, in uniform layers of 8-inch maximum thickness. Perform compaction by means of at least two passes of vibratory compactor.

3.07 FOUNDATION BASE.

A. Place foundation base after subgrade is properly prepared, including placement of foundation backfill where needed. Use foundation base consisting of 12-inch layer of crushed stone aggregate or cement stabilized sand. Alternately, seal slab with minimum thickness of 4 inches may be placed. Extend foundation base minimum of 12 inches beyond edge of structure foundation, unless shown otherwise on Drawings.

B. Where foundation base and foundation backfill are of same material, both can be placed in one operation.

3.08 BACKFILL

A. Complete backfill to surface of natural ground or to lines and grades shown on Drawings. Remove forms, lumber, trash and debris from structures. Deposit backfill in uniform layers and compact each layer as specified.

1. Unless otherwise shown on Drawings, for structures under pavement or within one foot back of curb, use cement stabilized sand up to the top of the proposed structure. Use suitable on-site material (random backfill) up to 12 inches below pavement base

or subgrade. Place minimum of 12 inches of select backfill below pavement base or subgrade.

2. Unless otherwise shown on Drawings, for structures not under pavement, use random backfill of suitable material up to the surface.

B. Do not place backfill against concrete walls or similar structures until laboratory test breaks indicate that concrete has reached minimum of 85 percent of specified compressive strength. Where walls are supported by slabs or intermediate walls, do not begin backfill operations until slab or intermediate walls have been placed and concrete has attained sufficient strength.

C. Remove concrete forms before starting backfill and remove shoring and bracing as work progresses.

D. Maintain backfill material at no less than 2 percent below nor more than 2 percent above optimum moisture content, unless otherwise approved by Project Manager. Place fill material in uniform 8-inch maximum loose layers. Compact fill to at least 95 percent of maximum Standard Proctor Density according to ASTM D 698 below paved areas. Compact fill to at least 90 percent around structures below unpaved areas.

E. Where backfill is placed against sloped excavation surface, run compaction equipment across boundary of cut slope and backfill to form compacted slope surface for placement of next layer of backfill.

F. Place backfill using cement stabilized sand in accordance with Section 02321 - Cement Stabilized Sand.

3.09 FIELD QUALITY CONTROL

A. Testing will be performed under provisions of Section 01454 - Testing Laboratory Services.

B. Tests will be performed initially on minimum of one different sample of each material type for plasticity characteristics, in accordance with ASTM D 4318, and for gradation characteristics, in accordance with Tex-101-E and Tex-110-E. Additional classification tests will be performed whenever there is noticeable change in material gradation or plasticity.

C. In-place density tests of compacted subgrade and backfill will be performed according to ASTM D 1556, or ASTM D 2922 and ASTM D 3017, and at following frequencies and conditions:

1. Minimum of one test for every 50 to 100 cubic yards of compacted backfill material as directed by Project Manager.

2. A minimum of three density tests for each full work shift.

3. Density tests will be performed in all placement areas.

4. Number of tests will be increased when inspection determines that soil types or moisture contents are not uniform or when compacting effort is variable and not considered sufficient to attain uniform density.

5. Identify elevation of test with respect to natural ground.

6. Record approximate depth of lift tested.

D. At least one test for moisture-density relationships will be initially performed for each type of backfill material in accordance with ASTM D 698. Perform additional moisture-density relationship test once a month or whenever there is noticeable change in material gradation or plasticity.

E. When tests indicate work does not meet specified compaction requirements, recondition, recompact, and retest at Contractor's expense.

3.10 DISPOSAL OF EXCESS MATERIAL

Dispose of excess materials in accordance with requirements of Section 01576 - Waste Material Disposal.

END OF SECTION

THIS PAGE IS INTENTIONALLY LEFT BLANK.

Section 02321

CEMENT STABILIZED SAND

PART 1 GENERAL

1.01 SECTION INCLUDES

A. Cement stabilized sand.

1.02 MEASUREMENT AND PAYMENT

A. Unit Prices.

1. No separate payment will be made for work performed under this Section. Include cost of such work in Contract unit prices for items listed in bid form requiring cement stabilized sand.

2. Refer to Paragraph 3.04 for material credit.

3. Refer to Section 01270 - Measurement and Payment for unit price procedures.

B. Stipulated Price (Lump Sum). If Contract is Stipulated Price Contract, payment for work in this Section is included in total Stipulated Price.

1.03 REFERENCES

A. ASTM C 33 - Standard Specification for Concrete Aggregates (Fine Aggregate).

B. ASTM C 40 - Standard Test Method for Organic Impurities in Fine Aggregates for Concrete.

C. ASTM C 42 - Standard Test Methods for Obtaining and Testing Drilled Cores and Sawed Beams of Concrete.

D. ASTM C 94 - Standard Specification for Ready-Mixed Concrete.

E. ASTM C 123 - Standard Test Method for Lightweight Particles in Aggregate.

F. ASTM C 142 - Standard Test Method for Clay Lumps and Friable Particles in Aggregates.

G. ASTM C 150 - Specification for Portland Cement.

H. ASTM D 558 - Standard Test Method for Moisture-Density Relations of Soil Cement-Mixtures.

I. ASTM D 1632 - Standard Practice for Making and Curing Soil-Cement Compression and Flexure Test Specimens in the Laboratory

J. ASTM D 1633 - Standard Test Method for Compressive Strength of Molded Soil-Cement Cylinders.

K. ASTM D 2487 - Standard Test Method for Classification of Soils for Engineering Purposes (Unified Soil Classification System).

L. ASTM D2922 - Standard Test Methods for Density of Soil and Soil-Aggregate in Place by Nuclear Methods (Shallow Depth)

M. ASTM D 3665 - Standard Practice for Random Sampling of Construction Materials.

N. ASTM D 4318 - Standard Test Method for Liquid Limit, Plastic Limit, and Plasticity Index of Soils.

1.04 SUBMITTALS

A. Conform to requirements of Section 01330 - Submittal Procedures.

B. Submit proposed target cement content and production data for sand-cement mixture in accordance with requirements of Paragraph 2.03, Materials Qualifications.

1.05 DESIGN REQUIREMENTS

A. Use sand-cement mixture producing minimum unconfined compressive strength of 100 pounds per square inch (psi) in 48 hours.

1. Design will be based on strength specimens molded in accordance with ASTM D 558 at moisture content within 3 percent of optimum and within 4 hours of batching.

2. Determine minimum cement content from production data and statistical history. Provide no less than 1.1 sacks of cement per ton of dry sand.

PART 2 PRODUCTS

2.01 MATERIALS

A. Cement: Type I Portland cement conforming to ASTM C 150.

B. Sand: Clean, durable sand meeting grading requirements for fine aggregates of ASTM C 33, or requirements for bank run sand of Section 02320 - Utility Backfill Materials, and the following requirements:

1. Classified as SW, SP, SW-SM, SP-SM, or SM by Unified Soil Classification System of ASTM D 2487.

2. Deleterious materials:

   a. Clay lumps, ASTM C 142 - less than 0.5 percent.

   b. Lightweight pieces, ASTM C 123; less than 5.0 percent.

   c. Organic impurities, ASTM C 40, color no darker than standard color.

3. Plasticity index of 4 or less when tested in accordance with ASTM D 4318.

C. Water: Potable water, free of oils, acids, alkalies, organic matter or other deleterious substances, meeting requirements of ASTM C 94.

2.02 MIXING MATERIALS

A. Add required amount of water and mix thoroughly in pugmill-type mixer.

B. Stamp batch ticket at plant with time of loading. Reject material not placed and compacted within 4 hours after mixing.

2.03 MATERIAL QUALIFICATION

A. Determine target cement content of material as follows:

1. Obtain samples of sand-cement mixtures at production facility representing range of cement content consisting of at least three points.

2. Complete molding of samples within 4 hours after addition of water.

3. Perform strength tests (average of two specimens) at 48 hours and 7 days.

4. Perform cement content tests on each sample.

5. Perform moisture content tests on each sample.

6. Plot average 48-hour strength vs. cement content.

7. Record scale calibration date, sample date, sample time, molding time, cement feed dial settings, and silo pressure (if applicable).

B. Test raw sand for following properties at point of entry into pug-mill:

1. Gradation
2. Plasticity index
3. Organic impurities
4. Clay lumps and friable particles
5. Lightweight pieces
6. Moisture content
7. Classification

C. Present data obtained in format similar to that provided in sample data form attached to this Section.

D. The target content may be adjusted when statistical history so indicates. For determination of minimum product performance use formula:

f'_c% 1/2 standard deviation

PART 3 EXECUTION

3.01 PLACING

A. Place sand-cement mixture in maximum 12-inch-thick loose lifts and compact to 95 percent of maximum density as determined in accordance with ASTM D 558, unless otherwise specified. Refer to related specifications for thickness of lifts in other applications. Target moisture content during compaction is ±3 percent of optimum. Perform and complete compaction of sand-cement mixture within 4 hours after addition of water to mix at plant.

B. Do not place or compact sand-cement mixture in standing or free water.

C. Where potable water lines cross wastewater line, embed wastewater line with cement stabilized sand in accordance with Texas Administrative Code §290.44(e)(4)(B):

1. Provide minimum of 10% cement per cubic yard of cement stabilized sand mixture, based on loose dry weight volume. Use at least 2.5 bags of cement per cubic yard of mixture (2 sacks per ton of dry sand).

2. Unless otherwise shown on Drawings, embed wastewater main or lateral minimum of six inches above and below.

3. Use brown coloring in cement stabilized sand for wastewater main or lateral bedding for identification of pressure rated wastewater mains during future construction.

3.02 FIELD QUALITY CONTROL

A. Testing will be performed under provisions of Section 01454 - Testing Laboratory Services.

B. One sample of cement stabilized sand shall be obtained for each 150 tons of material placed per day with no less than one sample per day of production. Random samples of delivered cement stabililized sand shall be taken in the field at point of delivery in accordance with ASTM 3665. Obtain three individual samples of approximately 12 to 15 lb each from the first, middle, and last third of the truck and composite them into one sample for test purpose.

C. Prepare and mold four specimens (for each sample obtained) in accordance with ASTM D 558, Method A, without adjusting moisture content. Samples will be molded at approximately same time material is being used, but no later than 4 hours after water is added to mix.

D. After molding, specimens will be removed from molds and cured in accordance with ASTM D 1632.

E. Specimens will be tested for compressive strength in accordance with ASTM D 1633, Method A. Two specimens will be tested at 48 hours plus or minus 2 hours and two specimens will be tested at 7 days plus or minus 4 hours.

F. A strength test will be average of strengths of two specimens molded from same sample of material and tested at same age. Average daily strength will be average of strengths of all specimens molded during one day's production and tested at same age.

G. Precision and Bias: Test results shall meet recommended guideline for precision in ASTM D 1633 Section 9.

H. Reporting: Test reports shall contain, as a minimum, the following information:

1. Supplier and plant number
2. Time material was batched
3. Time material was sampled
4. Test age (exact hours)
5. Average 48-hour strength
6. Average 7-day strength

7. Specification section number
8. Indication of compliance / non-compliance
9. Mixture identification
10. Truck and ticket numbers
11. The time of molding
12. Moisture content at time of molding
13. Required strength
14. Test method designations
15. Compressive strength data as required by ASTM D 1633
16. Supplier mixture identification
17. Specimen diameter and height, in.
18. Specimen cross-sectional area, sq. in.

3.03 ACCEPTANCE

A. Strength level of material will be considered satisfactory if:

1. The average 48-hour strength is greater than 100 psi with no individual strength test below 70 psi.

2. All 7-day individual strength tests (average of two specimens) are greater than or equal to 100 psi.

B. Material will be considered deficient when 7-day individual strength test (average of two specimens) is less than 100 psi but greater than 70 psi. See Paragraph 3.04 Adjustment for Deficient Strength.

C. The material will be considered unacceptable and subject to removal and replacement at Contractor=s expense when individual strength test (average of two specimens) has 7-day strength less than 70 psi.

D. When moving average of three daily 48-hour averages falls below 100 psi, discontinue shipment to project until plant is capable of producing material, which exceeds 100 psi at 48 hours. Five 48-hour strength tests shall be made in this determination with no individual strength tests less than 100 psi.

E. Testing laboratory shall notify Contractor, Project Manager, and material supplier by facsimile of tests indicating results falling below specified strength requirements within 24 hours.

F. If any strength test of laboratory cured specimens falls below the specified strength, Contractor may, at his own expense, request test of cores drilled from the area in question in accordance with ASTM C42. In such cases, three (3) cores shall be taken for each strength test that falls below the values given in 3.03.A.

G. Cement stabilized sand in an area represented by core tests shall be considered satisfactory if the average of three (3) cores is equal to at least 100 psi and if no single core is less that 70 psi. Additional testing of cores extracted from locations represented by erratic core strength results will be permitted.

3.04 ADJUSTMENT FOR DEFICIENT STRENGTH

A. When mixture produces 7-day compressive strength greater than or equal to 100 psi, then material will be considered satisfactory and bid price will be paid in full.

B. When mixture produces 7-day compressive strength less than 100 psi and greater than or equal to 70 psi, material shall be accepted contingent on credit in payment. Compute credit by the following formula:

$$\text{Credit per Cubic Yard} = \frac{\$30.00 \times 2\,(100\text{ psi} - \text{Actual psi})}{100}$$

C. When mixture produces 7-day compressive strength less than 70 pounds per square inch, then remove and replace cement-sand mixture and paving and other necessary work at no cost to City.

Supplier: City Stabilized Sand	**Plant No:** 1 - Main Street	**Date of Tests:** January 1, 1997

Item	Raw Sand	1.1 Sack	100 psi	1.5 Sack	2.0 Sack
Moisture Content	10.9	15.7	14.0	13.8	13.7
Cement Feed Dial Setting	--	2.25	2.5	2.75	3.75
Silo Pressure (psi)	--	4	4	4	4
Batch Time	10:00	10:10	10:15	10:20	10:25
Sample Time	--	10:10	10:15	10:20	10:25
Molding Time	--	12:30	12:45	1:00	1:15
Cement Content (sacks/ton)	--	1.1	1.3	1.6	2.1
Compressive Strength at 48 hrs. (avg of 2)	--	80	120	160	220
Compressive Strength at 7 days(avg of 2)	--	135	200	265	365

Sieve size	Percent Passing	COH Spec. Section 02320
3/8 Inch	100	--
No. 16	100	--
No. 40	100	--
No. 50	99	--
No. 100	41	--
No. 200	11	0 to 15

Raw Sand Tests	Result	City of Houston
Plasticity Index	Non-Plastic	4 Maximum
Organic Impurities	Passing	No Darker Than
Clay Lumps & Friable Parts (%)	0.0	0.5 % Maximum
Lightweight Pieces (%)	0.0	5.0 % Maximum
Classification	SP-SM	SW, SP, SW-SM, SP-SM, SM

Compressive Strength vs Cement Content

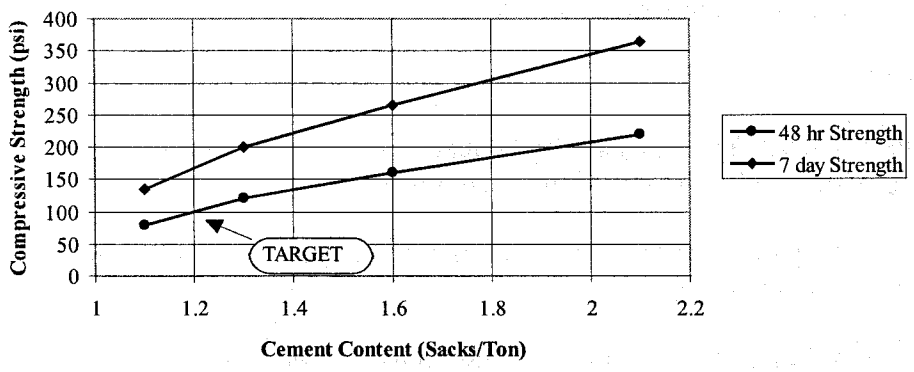

END OF SECTION

Section 02330

EMBANKMENT

PART 1 GENERAL

1.01 SECTION INCLUDES

A. Construction of embankments with excess excavated material and borrow.

1.02 MEASUREMENT AND PAYMENT

A. Unit Prices.

1. No separate payment will be made for embankment under this section. Include payment in unit price for excavation or borrow.

2. Refer to Section 01270 - Measurement and Payment for unit price procedures.

B. Stipulated Price (Lump Sum). If Contract is Stipulated Price Contract, payment for work in this Section is included in total Stipulated Price.

1.03 REFERENCES

A. ASTM D 698 - Standard Test Methods for Laboratory Compaction Characteristics of Soils Using Standard Effort (12,400 ft-lbf/ft^3 (600 kN-m/m^3)).

B. ASTM D 2922 - Standard Test Methods for Density of Soil and Soil-Aggregate in Place by Nuclear Methods (Shallow Depth).

C. ASTM D 3017 - Standard Test Method for Water Content of Soil and Rock in Place by Nuclear Methods (Shallow Depth).

PART 2 PRODUCTS

2.01 MATERIALS

A. Refer to Section 02315 - Roadway Excavation for acceptable excess materials from roadway excavation.

B. Refer to Section 02317 - Excavation and Backfill For Utilities for acceptable excess materials from utility excavation and trenching.

C. Refer to Section 02319 - Borrow for acceptable borrow materials.

PART 3 EXECUTION

3.01 EXAMINATION

A. Verify borrow and excess excavated materials to be reused are approved.

B. Verify removals and clearing and grubbing operations have been completed.

3.02 PREPARATION

A. Backfill test pits, stump holes, small swales and other surface irregularities. Backfill and compact in designated lift depths to requirements for embankment compaction.

B. Record location and plug and fill inactive water and oil wells. Conform to Texas State Health Department, Texas Commission on Environmental Quality and Texas Railroad Commission requirements. Notify City Engineer prior to plugging wells.

C. Excavate and dispose of unsuitable soil and other unsuitable materials which will not consolidate. Backfill and compact to requirements for embankment. Unsuitable soil is defined in Section 02316 - Excavation and Backfill for Structures and Section 02320 - Utility Backfill Materials.

D. Backfill new utilities below future grade. Conform to requirements of Sections 02317 - Excavation and Backfill For Utilities, 02511 - Water Lines, 02531 - Gravity Sanitary Sewers, and 02532 - Sanitary Sewage Force Mains.

3.03 PROTECTION

A. Protect trees, shrubs, lawns, existing structures, and other features outside of embankment limits.

B. Protect utilities above and below grade, which are to remain.

C. Conform to protection requirements of Section 02315 - Roadway Excavation.

3.04 PLACING EMBANKMENT

A. Do not conduct placement operations during inclement weather or when existing ground or fill materials exceed 3 percent of optimum moisture content. Contractor may manipulate wet material to facilitate drying, by disking or windrowing.

B. Do not place embankment fill until density and moisture content of previously placed material comply with specified requirements.

C. Scarify areas to be filled to minimum depth of 4 inches to bond existing and new materials. Mix with first fill layer.

D. Spread fill material evenly, from dumped piles or windrows, into horizontal layers approximately parallel to finished grade. Place to meet specified compacted thickness. Break clods and lumps and mix materials by blading, harrowing, disking or other approved method. Extend each layer across full width of fill.

E. Each layer shall be homogeneous and contain uniform moisture content before compaction. Mix dissimilar abutting materials to prevent abrupt changes in composition of fill.

F. Layers shall not exceed the following compacted thickness:

1. Areas indicated to be under future paving or shoulders, to be constructed within 6 months: 6 inches when compacted with pneumatic rollers, or 8 inches when compacted with other rollers.

2. Other areas: 12 inches

G. For steep slopes, cut benches into slope and scarify before placing fill. Place increasingly wider horizontal layers of specified depth to level of each bench.

H. Build embankment layers on back slopes, adjacent to existing roadbeds, to level of old roadbed. Scarify top of old roadbed to minimum depth of 4 inches and recompact with next fill layer.

I. Construct to lines and grades shown on Drawings.

J. Remove unsuitable material and excess soil not being used for embankment from site in accordance with requirements of Section 01576 - Waste Material Disposal.

K. Maintain moisture content of embankment materials to attain required density.

L. Compact to following minimum densities at moisture content of optimum to 3 percent above optimum as determined by ASTM D 698, unless otherwise indicated on Drawings:

1. Areas under future paving and shoulders: Minimum density of 95 percent of maximum dry density.

2. Other areas: Minimum density of 90 percent of maximum dry density.

3.06 TOLERANCES

A. Top of compacted surface: Plus or minus 1/2 inch in cross section or 16 foot length.

3.07 FIELD QUALITY CONTROL

A. Compaction Testing will be performed in accordance with ASTM D 698 or ASTM D 2922 and ASTM D 3017 under provisions of Section 01454 - Testing Laboratory Services.

B. A minimum of three tests will be taken for each 1000 linear feet per lane of roadway or 500 square yards of embankment per lift.

C. If tests indicate work does not meet specified compaction requirements, recondition, recompact, and retest at no cost to City.

END OF SECTION

Section 02336

LIME STABILIZED SUBGRADE

PART 1 GENERAL

1.01 SECTION INCLUDES

A. Foundation course of lime stabilized subgrade material.

1. Application of lime slurry to subgrade.

2. Mixing, compaction, and curing of lime slurry, water, and subgrade into a stabilized foundation.

1.02 MEASUREMENT AND PAYMENT

A. Unit Prices.

1. Measurement and payment for lime stabilized subgrade is on a square yard basis compacted in place to proper density. Separate measurement will be made for each required thickness of subgrade course.

   a. Limits of measurement shall match actual pavement replaced, but no greater than maximum pavement replacement limits shown on Drawings. Limits for measurement will be extended to include installed lime stabilized subgrade material that extends 2 foot beyond outside edge of pavement to be replaced, except where proposed pavement section shares common longitudinal or transverse edge with existing pavement section. No payment will be made for lime stabilized subgrade in areas beyond these limits.

   b. Limits of measurement and payment shall match pavement replacement limits shown on Drawings, except as noted in Paragraph 1.02.A.1.a, or as approved by Project Manager.

2. Measurement and payment for lime is by ton of 2000 pounds dry weight basis. Calculate weight of dry solids for lime slurry based on percentage by dry weight solids.

3. Refer to Section 01270 - Measurement and Payment for unit price procedures.

B. Stipulated Price (Lump Sum). If Contract is Stipulated Price Contract, payment for Work in this Section is included in total Stipulated Price.

1.03 DEFINITION

B. Moist Cure: Curing soil and lime to obtain optimum hydration.

C. 1000-Foot Roadway Section: 1000 feet per lane width or approximately 500 square yards of compacted subgrade for other than full-lane-width roadway sections.

1.04 REFERENCES

A. ASTM D 698 - Standard Test Method for Laboratory Compaction Characteristics of Soil Using Standard Effort (12,400 ft-lbf/ft^3 (600 kN-m/m^3).

B. ASTM D 2922 - Standard Test Methods for Density of Soil and Soil-Aggregate in Place by Nuclear Methods (Shallow Depth).

C. ASTM D 4318 - Standard Test Method for Liquid Limit, Plastic Limit, and Plasticity Index of Soils.

D. TxDOT Tex-101-E (Part III) - Preparation of Soil and Flexible Base Material for Testing.

E. TxDOT Tex-140-E - Measuring Thickness of Pavement Layer.

F. TxDOT Tex-600-J - Sampling and Testing Hydrated Lime, Quicklime, and Commercial Lime Slurry.

1.05 SUBMITTALS

A. Conform to requirements of Section 01330 - Submittal Procedures.

B. Submit certification that hydrated lime, quicklime, or commercial lime slurry complies with specifications.

C. Submit weight tickets, certified by supplier, with each bulk delivery of lime to work site.

1.06 DELIVERY, STORAGE AND HANDLING

A. Bagged lime shall bear manufacturer's name, product identification, and certified weight. Bags varying more than 5 percent of certified weight may be rejected; average weight of 50 random bags in each shipment shall not be less than certified weight.

B. Store lime in weatherproof enclosures. Protect lime from ground dampness.

PART 2 PRODUCTS

2.01 WATER

A. Use clean, clear water, free from oil, acids, alkali, or vegetation.

2.02 LIME

A. Type A - Hydrated Lime: Dry material consisting essentially of calcium hydroxide or mixture of calcium hydroxide and an allowable percentage of calcium oxide as listed in chemical composition chart.

B. Type B - Commercial Lime Slurry: Liquid mixture consisting essentially of lime solids and water in slurry form. Water or liquid portion shall not contain dissolved material in sufficient quantity to be injurious or objectionable for purpose intended.

C. Type C - Quicklime: Dry material consisting essentially of calcium oxide. Furnish quicklime in either of the following grades:

1. Grade DS: Pebble quicklime of gradation suitable for use in preparation of slurry for wet placing.

2. Grade S: Finely-graded quicklime for use in preparation of slurry for wet placing. Donor use grade S quicklime for dry placing.

D. Conform to the following requirements:

CHEMICAL COMPOSITION	TYPE		
	A	B	C
Active lime content, % by weight $Ca(OH)_2$+CaO	90.0 min[1]	87.0 min[2]	-
Unhydrated lime content, % by weight CaO	5.0 max	-	87.0 min
Free water content, % by weight H_2O:	5.0 max	-	-
SIZING			
Wet Sieve, as % by weight residue retained:			
No. 6	0.2 max	0.2 max[2]	8.0 max[3]
No. 30	4.0 max	4.0 max[2]	-
Dry sieve, as % by weight residue retained:			
1-inch	-	-	0.0
1/2-inch	-	-	10.0 max

Notes:
1. Maximum 5.0% by weight CaO shall be allowed in determining total active lime content.
2. Maximum solids content of slurry.
3. Total active lime content, as CaO, in material retained on No. 6 sieve shall not exceed 2.0% by weight of original Type C lime.

E. Deliver lime slurry to job site as commercial lime, or prepare at job site by using hydrated lime or quicklime. Provide slurry free of liquids other than water and of consistency that can be handled and uniformly applied without difficulty.

F. Lime containing magnesium hydroxide is prohibited.

2.03 SOIL

A. Soil to receive lime treatment may include borrow or existing subgrade material, existing pavement structure, or combination of all three. Where existing pavement or base material is encountered, pulverized or scarify material so that 100 percent of sampled material passes 2-inch sieve.

PART 3 EXECUTION

3.01 EXAMINATION

A. Verify compacted subgrade will support imposed loads.

B. Verify subgrade lines and grades.

3.02 PREPARATION

A. Complete backfill of utilities prior to stabilization.

B. Cut material to bottom of subgrade using an approved cutting and pulverizing machine meeting following requirements:

1. Cutters accurately provide smooth surface over entire width of cut to plane of secondary grade.

2. Provide cut to depth as specified or shown in the Drawings.

C. Alternatively, scarify or excavate to bottom of stabilized subgrade. Remove material or windrow to expose secondary grade. Obtain uniform stability.

D. Correct wet or unstable material below secondary grade by scarifying, adding lime, and compacting as directed by Project Manager.

E. Pulverize existing material so that 100 percent passes a 1-3/4-inch sieve.

3.03 LIME SLURRY APPLICATION

A. Apply slurry with distributor truck equipped with an agitator to keep lime and water in consistent mixture. Make successive passes over measured section of roadway to attain proper moisture and lime content. Limit spreading to an area where preliminary mixing operations can be completed on same working day.

B. Minimum lime content shall be 5 percent of dry unit weight of subgrade as determined by ASTM D 698

3.04 PRELIMINARY MIXING

A. Use approved single-pass or multiple-pass rotary speed mixers to mix soil, lime, and water to required depth. Obtain homogeneous friable mixture free of clods and lumps.

B. Shape mixed subgrade to final lines and grades.

C. Eliminate following operations and final mixing if pulverization requirements of Paragraph 3.05C can be met during preliminary mixing:

1. Seal subgrade as precaution against heavy rainfall by rolling lightly with light pneumatic rollers.

2. Cure soil lime material for 24 to 72 hours or as required to obtain optimum hydration. Keep subgrade moist during cure.

3.05 FINAL MIXING

A. Use approved single-pass or multiple-pass rotary speed mixers to uniformly mix cured soil and lime to required depth.

B. Add water to bring moisture content of soil mixture to optimum or above.

C. Mix and pulverize until all material passes 13/4-inch sieve; minimum of 85 percent, excluding non-slacking fractions, passes 3/4-inch sieve; and minimum of 60 percent excluding non-slacking fractions passes No. 4 sieve. Test according to TxDOT Tex-101-E, Part III using dry method.

D. Shape mixed subgrade to final lines and grades.

E. Do not expose hydrated lime to open air for 6 hours or more during interval between application and mixing. Avoid excessive hydrated lime loss due to washing or blowing.

3.06 COMPACTION

A. Aerate or sprinkle to attain optimum moisture content to 3 percent above optimum, as determined by ASTM D 698 on material sample from roadway after final mix with lime.

B. Start compaction immediately after final mixing.

C. Spread and compact in two or more equal layers where total compacted thickness is greater than equipment manufacturer's recommended range of mixing and compaction.

D. Compact with approved heavy pneumatic or vibrating rollers, or combination of tamping rollers and light pneumatic rollers. Begin compaction at bottom and continue until entire depth is uniformly compacted.

E. Do not allow stabilized subgrade to mix with underlying material. Correct irregularities or weak spots immediately by replacing material and recompacting.

F. Compact subgrade to minimum density of 95 percent of maximum dry density, according to ASTM D 698, at moisture content of optimum to 3 percent above optimum, unless otherwise indicated on Drawings:

G. Seal with approved light pneumatic tired rollers. Prevent surface hair line cracking. Rework and recompact at areas where hairline cracking develops.

3.07 CURING

A. Moist cure for minimum of 3 days before placing base or surface course, or opening to traffic. Subgrade may be opened to traffic after 2 days when adequate strength has been attained to prevent damage. Restrict traffic to light pneumatic rollers or vehicles weighing less than 10 tons.

B. Keep subgrade surface damp by sprinkling. Roll with light pneumatic roller to keep surface knit together.

C. Place base or surface within 14 days after final mixing and compaction. Restart compaction and moisture content of base material when time is exceeded.

3.08 TOLERANCES

A. Completed surface: smooth and conforming to typical section and established lines and grades.

B. Top of compacted surface: Plus or minus 1/4 inch in cross section or in 16-foot length.

C. Depth of lime stabilization shall be plus or minus one inch of specified depth for each 1000-foot roadway section.

3.09 FIELD QUALITY CONTROL

A. Testing will be performed under provisions of Section 01454 - Testing Laboratory Services.

B. Test soils, lime, and mixtures as follows:

1. Tests and analysis of soil materials will be performed in accordance with ASTM D 4318, using the wet preparation method.

2. Sampling and testing of lime slurry shall be in accordance with TxDOT Tex-600-J, except using a lime slurry cup.

3. Sample mixtures of hydrated lime or quicklime in slurry form will be tested to establish compliance with specifications.

4. Moisture-density relationship will be established on material sampled from roadway, after stabilization with lime and final mixing, in accordance with ASTM 698, Moist preparation Method.

C. In-place depth will be evaluated for each 1000-foot roadway section and determined in accordance with TxDOT Tex-140-E in hand excavated holes. For each 1000-foot section, 3 phenolphthalein tests will be performed. Average stabilization depth for 1000-foot section will be based on average depth for three tests.

D. Perform compaction testing in accordance with ASTM D 2922. Three tests will be performed for each 1000-foot roadway section.

E. Pulverization analysis will be performed as required by Paragraph 3.05C on material sampled during mixing of each production area. Three tests will be performed per 1000-foot roadway section or a minimum of once daily.

3.10 REWORK OF FAILED SECTIONS

A. Rework sections that do not meet specified thickness.

B. Perform the following steps when more than 72 hours have lapsed since completion of compaction.

1. Moist cure for minimum of 3 days after compaction to required density.

2. Add lime at rate of 25 percent of specified rate at no additional cost to City.

3. Moisture density test of reworked material must be completed by laboratory before field compaction testing can be completed.

3.11 PROTECTION

A. Maintain stabilized subgrade to lines and grades and in good condition until placement of base or surface course. Protect asphalt membrane from being picked up by traffic.

B. Repair defects immediately by replacing material to full depth.

END OF SECTION

Section 02337

LIME/FLY ASH STABILIZED SUBGRADE

PART 1 GENERAL

1.01 SECTION INCLUDES

A. Foundation course of lime/fly ash stabilized subgrade material.

1. Application of lime slurry and fly ash to subgrade

2. Mixing, compaction, and curing of lime, slurry, fly ash, water and subgrade into a stabilized foundation

1.02 MEASUREMENT AND PAYMENT

A. Unit Prices.

1. Measurement and payment for lime/fly ash stabilized subgrade is on a square yard basis compacted in place to proper density. Separate measurement will be made for each required thickness of subgrade course.

   a. Limits of measurement shall match actual pavement replaced, but no greater than the maximum pavement replacement limits shown on Drawings. Limits for measurement will be extended to include installed lime/fly ash stabilized subgrade material that extends 2 foot beyond outside edge of pavement to be replaced, except where proposed pavement section shares a common longitudinal or transverse edge with existing pavement section. No payment will be made for lime/fly ash stabilized subgrade in areas beyond these limits.

   b. Limits of measurement and payment shall match pavement replacement limits shown on Drawings, except as noted in Paragraph 1.02.A.1.a, or as approved by Project Manager

2. Payment for hydrated lime and quicklime is by ton of 2000 pounds dry-weight basis

3. Payment for commercial lime slurry is by ton of 2000 pounds of lime calculated on percentage by weight of dry solids for grade of slurry

4. Payment for fly ash is on unit price basis per ton

5. Refer to Section 01270 - Measurement and Payment for unit price procedures

B. Stipulated Price (Lump Sum). If Contract is Stipulated Price Contract, payment for Work in this Section is included in total Stipulated Price.

1.03 DEFINITIONS

A. Moist Cure: Curing soil lime/fly ash material to obtain optimum hydration.

B. 1000-Foot Roadway Section: 1000 feet per lane width or approximately 500 square yards of compacted subgrade for other than full-lane-width roadway sections.

1.04 REFERENCES

A. ASTM C 618 - Standard Specification for Coal Fly Ash and Raw or Calcinated Natural Pozzolan for use as Mineral Admixture in Portland Cement Concrete.

1.05 SUBMITTALS

A. Conform to requirements of Section 01330 - Submittal Procedures.

B. Submit certification that fly ash, hydrated lime, quicklime, or commercial lime slurry complies with these specifications.

C. Submit weight tickets, certified by supplier, with each bulk delivery of materials to work site.

1.06 DELIVERY, STORAGE, AND HANDLING

A. Conform to requirements of Section 02336 - Lime Stabilized Subgrade.

B. Quicklime can be dangerous; exercise extreme caution if used for Work. Become informed about recommended precautions in handling, storage and use of quicklime.

PART 2 P R O D U C T S

2.01 MATERIALS

A. Water: clean, clear and free from oil, acids, alkali, or vegetable matter.

B. Conform to requirements of Section 02336 - Lime Stabilized Subgrade for Type A hydrated lime, Type C quicklime, and Type B commercial lime slurry.

C. Fly ash: Residue or ash remaining after burning finely pulverized coal at high temperatures conforming to requirements of ASTM C 618, Type 'C" or "F" and following:

1. Minimum CaO content of 20 percent
2. Loss on ignition not to exceed 3 percent
3. Contain no lignite ash

D. Asphaltic Seal Cure: Conform to requirements of Section 02336 - Lime Stabilized Subgrade.

PART 3 EXECUTION

3.01 INSTALLATION

A. Conform to Part 3 of Section 02336 - Lime Stabilized Subgrade with following exceptions:

1. Include fly ash in percentage amounts in lime or lime slurry as established from geotechnical evaluation for application, mixing, and compaction.
2. Apply lime/fly ash as single mix, single pass over lower PI soils.
3. Conduct operations to minimize elapsed time between mixing and compacting lime/fly ash stabilized subgrade in order to take advantage of rapid initial set characteristics. Complete compaction within 2 hours of commencing compaction and not more than 6 hours after adding and mixing last stabilizing agent.

3.02 QUALITY CONTROL

A. Testing will be performed under provisions of Section 01454 - Testing Laboratory Services.

B. Soil will be sampled to establish percent of fly ash and hydrated lime, quicklime, or lime slurry to be applied to subgrade material.

C. Testing will be in accordance with Part 3 of Section 2336-Lime-Stabilized Subgrade.

END OF SECTION

THIS PAGE IS INTENTIONALLY LEFT BLANK.

Section 02611

REINFORCED CONCRETE PIPE

PART 1 GENERAL

1.01 SECTION INCLUDES

A. Reinforced concrete pipe for sanitary sewers and storm sewers.

1.02 MEASUREMENT AND PAYMENT

A. Unit Prices.

1. No separate payment will be made for reinforced concrete pipe under this Section. Include cost in unit price Work as specified in following Sections:

   a. Section 02426 - Sewer Line in Tunnels.

   b. Section 02531 - Gravity Sanitary Sewers.

   c. Section 02631 - Storm Sewers.

2. Refer to Section 01270- Measurement and Payment for unit price procedures.

B. Stipulated Price (Lump Sum). If Contract is Stipulated Price Contract, payment for Work in this section is included in total Stipulated Price.

1.03 REFERENCES

A. ASTM C 76 - Standard Specification for Reinforced Concrete Culvert, Storm Drain, and Sewer Pipe.

B. ASTM C 443 - Standard Specification for Joints for Circular Concrete Sewer and Culvert Pipe Using Rubber Gaskets.

C. ASTM C 497 - Standard Test Method for Concrete Pipe, Manhole Sections, or Tile.

D. ASTM C 506 - Standard Specification for Reinforced Concrete Arch Culvert, Storm Drain and Sewer Pipe

E. ASTM C 507 – Standard Specification for Reinforced Concrete Elliptical Culverts, Storm Drains and Sewer Pipe

F. ASTM C 655 - Standard Specification for Reinforced Concrete D-load Culvert, Storm Drain and Sewer Pipe.

G. ASTM C 877 - Standard Specification for External Sealing Bands for Noncircular Concrete Sewer, Storm Drain, and Culvert Pipe.

H. ASTM C 990 – Standard Specification for Joints for Concrete Pipe, Manholes and Precast Box Sections using Preformed Flexible Joint Sealants.

I. ASTM C 1479 – Standard Practice for Installation of Precast Concrete Sewer, Storm Drain, and Culvert Pipe Using Standard Installations.

1.04 SUBMITTALS

A. Conform to requirements of Section 01330 - Submittal Procedures.

B. Submit complete product data for pipe, fittings and gaskets for approval. Indicate conformance to appropriate reference standards.

C. Submit manufacturer's certificate that concrete pipes meet applicable standards.

D. For jacking pipe, submit drawings and data describing grouting port design and closure procedures when required by Section 02431 - Tunnel Grout, including liner repair, as applicable.

PART 2 P R O D U C T S

2.01 REINFORCED CONCRETE PIPE

A. Conform circular reinforced concrete pipe to requirements of ASTM C 76, Class III wall. Conform to rubber gasket joints for sanitary sewers and storm sewers per ASTM C443 and tongue and groove joints for roadside ditch culverts with joints per ASTM C 990.

B. Conform reinforced concrete arch pipe to requirements of ASTM C 506 for Class A-III. Joints shall conform to ASTM C 443 or tongue & groove joints shall conform to ASTM C 990 with external sealing bands conforming to ASTM C 877. For roadside ditch culverts only, external sealing bands are not required.

C. Reinforced concrete elliptical pipe, either vertical or horizontal, shall conform to requirements of ASTM C 507 for Class VE-III for vertical or Class HE-III for horizontal. Use rubber gasket joints conforming to ASTM C 877. Rubber gasket joints shall conform to ASTM C

443. Tongue & groove joints shall conform to ASTM C 990 with external sealing bands conforming to ASTM C 877. For roadside ditch culverts only, external sealing bands are not required.

D. Conform reinforced concrete D-load pipe requirements of ASTM C 655.

2.02 GASKETS

A. When no contaminant is identified, furnish joints per section 2.01

B. Use the following gasket materials for pipes to be installed in potentially contaminated areas, especially where free product is found near elevation of proposed sewer:

CONTAMINANT	GASKET MATERIAL REQUIRED
Petroleum (diesel, gasoline)	Nitrile Rubber
Other Contaminants	As recommended by pipe manufacturer, Engineer of the Record and approved by City Engineer prior to installation

2.03 LINERS FOR SANITARY SEWER PIPE

A. Reinforced concrete pipe for sanitary sewers shall be PVC lined and conform to Section 02427 - Plastic Liner for Large Diameter Concrete Sewers and Structures.

B. Reinforced concrete pipes to be installed in potentially contaminated areas shall have liners recommended by manufacturer as resistant to contaminants identified in Phase II Environmental Site Assessment Report.

2.04 SOURCE QUALITY CONTROL

A. Representatives of City Engineer will inspect manufacturer's plant and casting operations as deemed necessary.

PART 3 EXECUTION

3.01 INSTALLATION

A. Conform to requirements of following Sections, as applicable:

1. Section 02448 - Pipe and Casing Augering for Sewers.

2. Section 02531 - Gravity Sanitary Sewers.

3. Section 02631 - Storm Sewers.

4. Section 02441 - Micro-tunneling and Pipe-Jacked Tunnels.

B. Install reinforced concrete pipe in accordance with ASTM C 1479 and manufacturer's recommendations.

END OF SECTION

Section 02631

STORM SEWERS

PART 1 GENERAL

1.01 SECTION INCLUDES

A. New storm sewers and appurtenances, modifications to existing storm sewer system and installation of roadside ditch culverts.

1.02 MEASUREMENT AND PAYMENT

A. Unit Prices.

1. Payment for storm sewers, including elliptical or box storm sewer, installed by open-cut, augered with or without casing, or tunneling is on linear foot basis. Measurement for storm sewers and roadside ditch culverts will be taken along center line of pipe from center line to center line of manholes or from end to end of culverts. Measurement for storm sewer will be taken along center line of storm sewer from inside wall of storm sewer junction box when installed in conjunction with storm sewer junction box. Payment will be made for each linear foot installed complete in place, including connections to existing manholes and inlets.

2. Payment for storm sewer leads, including elliptical leads, is on a linear foot basis.

3. Payment for corrugated metal pipe storm sewer outfall, including timber bents, is on a linear foot basis.

4. Refer to Section 01270 - Measurement and Payment for unit price procedures.

B. Stipulated Price (Lump Sum). If Contract is Stipulated Price Contract, payment for Work in this Section is included in total Stipulated Price.

1.03 SUBMITTALS

A. Conform to requirements of Section 01330 - Submittal Procedures.

B. Submit manufacturer's literature for product specifications and installation instructions.

C. Submit proposed methods, equipment, materials, and sequence of operations for sewer construction. Plan operations to minimize disruption of utilities to occupied facilities or adjacent property.

1.04 QUALITY ASSURANCE

A. The Condition for acceptance shall be watertight storm sewer that is watertight both in pipe-to-pipe joints and in pipe-to-manhole connections.

B. Provide manufacturer's certification to Specifications.

1.05 PRODUCT DELIVERY, STORAGE, AND HANDLING

A. Comply with manufacturer's recommendations.

B. Handle pipe, fittings, and accessories carefully with approved handling devices. Do not drop or roll pipe off trucks or trailers. Do not use Materials cracked, gouged, chipped, dented, or otherwise damaged shall not be use materials for installation.

C. Store pipe and fittings on heavy timbers or platforms to avoid contact with ground.

D. Unload pipe, fittings, and appurtenances as close as practical to location of installation to avoid unnecessary handling.

E. Keep interiors of pipe and fittings free of dirt and foreign matter.

F. Store PVC pipe out of direct sunlight.

PART 2 PRODUCTS

2.01 PIPE

A. Provide piping materials for storm sewers shall be of sizes and types specified unless otherwise indicated on Drawings.

B. In diameters where material alternatives are available, provide pipe from single manufacturer for each pipe diameter, unless otherwise approved by Project Manager or otherwise shown on Drawings.

C. Existing pipe that has been removed during construction cannot be reused.

2.02 PIPE MATERIAL SCHEDULE

A. Storm Sewer Pipe: Use pipe materials that conforming to requirements specified in one or more of the following Sections as shown on the Drawings.

1. Section 02506 - Polyvinyl Chloride Pipe. Not allowed in the following applications:

a. Potentially Petroleum Contaminated Areas (PPCA).

b. Augering/ jacking

2. Section 02505 - High Density Polyethylene (HDPE) Solid and Profile Wall Pipe. For use only where Storm Sewers are associated with Local Streets, where Local Street is definded by City of Houston Code of Ordinances 42-122.

3. Section 02611 - Reinforced Concrete Pipe.

4. Section 02641 - Monolithic Reinforced Concrete Sewers.

5. Section 02612 - Precast Reinforced Concrete Box Sewers.

6. Section 02642 - Corrugated Metal Pipe use only where Corrugated Metal Pipe is shown on Drawings.

B. Driveway Culvert Pipe for Streets with Open Ditches: Use pipe materials conforming to requirements specified in one or more of the following Sections as shown on the Drawings.

1. Section 02505 - High Density Polyethylene (HDPE) Solid and Profile Wall Pipe Use for Residential Culverts only. Use Concrete Pipe for long run culverts.

2. Section 02611 - Reinforced Concrete Pipe.

3. Section 02641 - Monolithic Reinforced Concrete Sewers.

4. Section 02612 - Precast Reinforced Concrete Box Sewers.

C. Provide pipe meeting minimum class, dimension ratio, or other criteria indicated.

D. Pipe materials other than those listed above shall not be used for storm sewers.

2.03 BEDDING, BACKFILL, AND TOPSOIL MATERIAL

A. Bedding and Backfill Material: Conform to requirements of Sections 02317 - Excavation and Backfill for Utilities, Section 02320 - Utility Backfill Material, and Section 2321 – Cement Stabilized Sand, and 02322 – Flowable Fill.

B. Topsoil: Conform to requirements of Section 02911 - Topsoil.

PART 3 EXECUTION

3.01 PREPARATION

A. Prepare traffic control plans and set up street detours and barricades in preparation for excavation when construction will affects traffic. Conform to requirements of Section 01555 Traffic Control and Regulation.

B. Provide barricades, flashing warning lights, and signs for excavations. Conform to requirements of Section 01555 - Traffic Control and Regulation. Maintain barricades and warning lights for streets and intersections while Work is in progress or where traffic is affected by Work.

C. Immediately notify agency or company owning utility lines which are damaged, broken, or disturbed. Obtain approval from Project Manager and agency for repairs or relocations, either temporary or permanent.

D. Remove old pavements and structures, including sidewalks and driveways in accordance with requirements of Section 02221 - Removing Existing Pavements and Structures.

E. Install and operate dewatering and surface water control measures in accordance with Section 01578 - Control of Ground Water and Surface Water.

3.02 EXCAVATION

A. Earthwork. Conform to requirements of Section 02317 - Excavation and Backfill for Utilities. Use bedding as indicated on Drawings.

B. Line and Grade. Establish required uniform line and grade trench from benchmarks identified by Project Manager. Maintain this control for minimum of 100 feet behind and ahead of pipe-laying operation. Use laser beam equipment to establish and maintain proper line and grade of Work. Or use appropriately sized grade boards which are substantially supported.

C. Trench Excavation. Excavate pipe trenches to level as indicated on Standard Details. Backfill excavation with specified bedding material to level of lower one-third of pipe barrel. Tamp and compact backfill to provide bedding at indicated grade. Form bedding foundation to minimum depth of one-eighth of pipe diameter, but not less than 12 inches.

3.03 PIPE INSTALLATION

A. Install in accordance with pipe manufacturer's recommendations and as specified in this section.

B. Install pipe only after excavation is completed, bottom of trench is shaped, bedding material is installed, and trench has been approved by Project Manager.

C. Install pipe to line and grade indicated on Drawings. Place pipe so that it has continuous bearing of barrel on bedding material with no voids, and is laid in trench so interior surfaces of pipe follows grades and alignments indicated.

D. Install pipe with bells of pipe facing upstream of anticipated flow.

E. Form concentric joint with each section of adjoining pipe to prevent offsets.

F. Place and drive home newly laid sections with a sling or come-a-long winches to eliminate damage to sections. Unless otherwise approved by Project Manager, provide end protection to prevent damage while using back hoes or similar powered equipment to drive home newly laid sections.

G. Keep interior of pipe clean as installation progresses.

H Keep excavations free of water during construction and until final inspection.

I. When work is not in progress, cover exposed ends of pipes with pipe plug specifically designed to prevent foreign material from entering pipe.

J. For PVC Pipe:

1. Provide a minimum cover as per City Standard detail from top of pavement to top of pipe, but no less than 2 feet.

2. Accomplish transitions to different material of pipe in a manhole or inlet box. No adapter, coupling for dissimilar pipe, or saddle connections allowed.

3. Provide pipe sections in standard lengths with minimum length of 13 feet. Pipe may be field modified to shorten length no less than 4 feet, unless otherwise approved by Project Manager. Field modify pipe per manufacturer's recommendations.

4. No beveling at joint allowed. Cut to be perpendicular to longitudinal axis.

5. Provide gasketed bell and spigot joints installed per manufacturer's recommendations. Gasketed pipe joints; clean and free of debris, show no leakage after installation.

3.04 PIPE INSTALLATION OTHER THAN OPEN CUT

A. Conform to requirements of Section 02448 - Pipe and Casing Augering for Sewers where required.

B. Conform to requirements of Section 02441 - Microtunneling and Pipe-Jacking Tunnels where required.

C. Not allowed for plastic sewer pipe.

3.05 INSTALLATION OF APPURTENANCES
A

A. Construct manholes to conform to requirements of Sections 02081 - Cast-in-place Concrete Manholes, and Section 02082 - Precast Concrete Manholes, and Section 2087 - Brick Manholes for Storm Sewers. Install frames, grate rings, and covers to conform to requirements of Section 02084 - Frames, Grates, Rings, and Covers.

B. Install PVC pipe culverts with approved end treatments. Approved end treatments include concrete headwalls, wingwalls and collars. Refer to City Standards detail for end treatment requirements.

C. Install HDPE pipe culverts with approved end treatments. Approved end treatments include concrete headwalls, wingwalls and collars. Refer to City Standards detail for end treatment requirements.

D. Install inlets, headwalls, and wingwalls to conform to requirements of Section 02632 - Cast-in-place Inlets, Headwalls, and Wingwalls and Section 02633 - Precast Concrete Inlets, Headwalls, and Wingwalls.

E. Rehabilitate existing manholes to conform to requirements of Section 02555 – Manhole Rehabilitation. Adjust manhole covers and inlets to grade conforming to requirements of Section 02086 - Adjusting Manholes, Inlets, and Valve Boxes to Grade.

F. Dimension for Type C and Type E manholes shall be as shown on Drawings.

3.06 INSPECTION AND TESTING

A. Perform post installation television inspection in accordance with Section 02531 – Gravity Sanitary Sewers. Hand held cameras may be used in storm sewers in lieu of requirements of Paragraph 3.09 of Section 02531 – Gravity Sanitary Sewers. Clearly stencil distance markings on each joint of pipe to indicate distance from starting manhole when using hand held cameras.

3.07 BACKFILL AND SITE CLEANUP

A. Backfill trench after pipe installation is inspected and approved by Project Manager.

B. Backfill and compact soil in accordance with Section 02317 - Excavation and Backfill for Utilities.

C. Repair and replace removed or damaged pavement and sidewalks as specified in Section 02951 - Pavement Repair and Restoration.

D. In unpaved areas, grade surface as uniform slope to natural grade as indicated on Drawings. Provide minimum of 4 inches of topsoil and seed according to requirements of Section 02921 Hydromulch Seeding, or Section 02922 - Sodding, as required.

END OF SECTION

Section 02632

CAST-IN-PLACE INLETS, HEADWALLS AND WINGWALLS

PART 1 GENERAL

1.01 SECTION INCLUDES

A. Cast-in-place inlets for storm or sanitary sewers, including cast iron frame and plate or grate.

B. Cast-in-place headwalls including wingwalls for storm sewers.

C. Cast-in-place junction box with lid or grate top.

1.02 MEASUREMENT AND PAYMENT

A. Unit Prices.

1. Payment for inlets is on unit price basis for each inlet installed.

2. Payment for headwalls including wingwalls is on unit price basis for each headwall including wingwall installed.

3. Payment for junction box with lid or grate top is on unit price basis for each junction box installed.

4. Payment for inlets and for culvert headwalls including wingwalls and junction boxes includes connection of lines and furnishing and installing frames, grates, rings, and covers.

5. Refer to Section 01270 - Measurement and Payment for unit price procedures.

B. Stipulated Price (Lump Sum). If Contract is Stipulated Price Contract, payment for work in this section is included in total Stipulated Price.

1.03 SUBMITTALS

A. Conform to requirements of Section 01330 - Submittal Procedures.

B. Submit shop drawings for approval of design and construction details for cast-in-place units which differ from units shown on Drawings.

C. Submit manufacturers' data and details for frames, grates, rings, and covers.

PART 2 PRODUCTS

2.01 MATERIALS

A. Concrete: Class A concrete with minimum compressive strength of 4000 psi conforming to requirements of Section 03315 - Concrete for Utility Construction, unless otherwise indicated on Drawings.

B. Reinforcing Steel: Conform to requirements of Section 03315 - Concrete for Utility Construction.

C. Concrete Bricks - Conform to requirements of Section 04210 - Brick Masonry for Utility Construction. Use manhole bricks.

D. Mortar and Hydraulic Cement - Conform to requirements of Section 04061 - Mortar.

E. Miscellaneous metals: Cast-iron frames, grates, rings, and covers conforming to requirements of Section 02084 - Frames, Grates, Rings, and Covers.

PART 3 EXECUTION

3.01 EXAMINATION

A. Verify lines and grades are correct.

B. Verify compacted subgrade will support loads imposed by inlets.

3.02 INSTALLATION

A. Construct units complete in place to dimensions, lines and grades as shown on Drawings.

B. Excavate in accordance with requirements of Section 02317 - Excavation and Backfill for Utilities.

C. Construct box section of inlet of Class A concrete or brick.

D. Plaster brick inlets with 1/2 inch mortar on inside. Use walls for brick inlets minimum of 8 inches thick. Conform to the requirements of Section 04210 - Brick Masonry for Utility Construction.

E. Forms required for both outside and inside faces of concrete inlet walls, however, when nature of material excavated for inlet can be hand trimmed to smooth vertical face, outside forms may be omitted with approval of Project Manager.

F. Place reinforcing steel to conform to details shown on Drawings. Provide positive means for holding steel cages in place during concrete placement. Welding of reinforcing steel is not permitted unless noted on Drawings. Maximum variation in reinforcement position is plus or minus 10 percent of wall thickness or plus or minus 1/2 inch, whichever is less. Regardless of variation, maintain minimum cover of concrete over reinforcement as shown on Drawings.

G. Chamfer exposed edges unless otherwise indicated on Drawings.

3.03 FINISHES

A. Cut off inlet leads neatly at inside face of inlet wall. Point up with mortar.

B. When box section of inlet complete, shape floor of inlet with mortar to conform to detailed Drawings.

C. Finish concrete surfaces in accordance with requirements of Section 03315 - Concrete for Utility Construction.

3.04 QUALITY CONTROL

A. Verify that inlets are free of leaks. Repair leaks in approved manner.

3.05 CONNECTIONS

A. Connect inlet leads to inlets.

B. Seal leads inside and outside with hydraulic cement.

3.06 BACKFILL

A. Backfill area of excavation surrounding each completed inlet according to requirements of Section 02317 - Excavation and Backfill for Utilities.

END OF SECTION

THIS PAGE IS INTENTIONALLY LEFT BLANK.

Section 02751

CONCRETE PAVING

PART 1 GENERAL

1.01 SECTION INCLUDES

A. Portland cement concrete paving.

1.02 MEASUREMENT AND PAYMENT

A. Unit Prices.

1. Payment for concrete paving is on square yard basis. Separate pay items are used for each different required thickness of pavement.

2. Payment for concrete paving, high early strength, is on square yard basis.

3. Payment for pavement repair or pavement replacement for utility projects is on a square yard basis and includes base materials in accordance with Section 02951.

4. Refer to Section 01270 - Measurement and Payment for unit price procedures.

5. Refer to Paragraph 3.15, Unit Price Adjustment.

B. Stipulated Price (Lump Sum). If Contract is Stipulated Price Contract, payment for Work in this Section is included in total Stipulated Price.

1.03 REFERENCES

A. ASTM A82 - Standard Specification for Steel Wire, Plain, for Concrete Reinforcement.

B. ASTM A185 - Standard Specifications for Steel Welded Wire Fabric, Plain, for Concrete Reinforcement.

C. ASTM A497 – Standard Specification for Steel Welded Wire Reinforcement, Deformed, for Concrete.

D. ASTM A615 - Standard Specification for Deformed and Plain Billet - Steel Bars for Concrete Reinforcement.

E. ASTM C 31 - Standard Practice for Making and Curing Concrete Test Specimens in the Field.

F. ASTM C 33 - Standard Specifications for Concrete Aggregates.

G. ASTM C 39 - Standard Test Method for Compressive Strength of Cylindrical Concrete Specimens.

H. ASTM C 40 - Standard Test Method for Organic Impurities in Fine Aggregates for Concrete.

I. ASTM C 42 - Standard Test Method of Obtaining and Testing Drilled Cores and Sawed Beams of Concrete.

J. ASTM C 78 - Standard Test Method for Flexural Strength of Concrete (Using Simple Beam with Third Point Loading).

K. ASTM C 94 - Standard Specification for Ready-Mixed Concrete.

L. ASTM C 131 - Standard Test Method for Resistance to Degradation of Small-Size Coarse Aggregate by Abrasion and Impact in the Los Angeles Machine.

M. ASTM C 136 - Standard Method for Sieve Analysis of Fine and Coarse Aggregates.

N. ASTM C 138 - Standard Test Method for Unit Weight, Yield, and Air Content (Gravimetric) of Concrete.

O. ASTM C 143 - Standard Test Method for Slump of Hydraulic Cement Concrete.

P. ASTM C 150 - Standard Specification for Portland Cement.

Q. ASTM C 174 - Standard Test Method for Measuring Thickness of Concrete Elements Using Drilled Concrete Cores.

R. ASTM C 231 - Standard Test Method for Air Content of Freshly Mixed Concrete by the Pressure Method.

S. ASTM C 260 - Standard Specification for Air-Entraining Admixtures for Concrete.

T. ASTM C 494 - Standard Specification for Chemical Admixtures for Concrete.

U. ASTM C 618 - Standard Specification for Coal Fly Ash and Raw or Calcined Natural Pozzolan for use as a Mineral Admixture in Portland Cement Concrete.

V. TxDOT Tex-203-F - Sand Equivalent Test.

W TxDOT Tex-406-A - Material Finer than 75 Φm (No. 200) Sieve In Mineral Aggregates (Decantation Test for Cement Aggregates).

1.04 SUBMITTALS

A. Conform to requirements of Section 01330 - Submittal Procedures.

B. Submit proposed mix design and test data for each type and strength of concrete in Work. Include proportions and actual flexural strength obtained from design mixes at required test ages.

C. Submit for approval manufacturer's description and characteristics for mixing equipment, and for traveling form paver, when proposed for use.

D. Submit manufacturer's certificates giving properties of reinforcing steel. Include certificate of compliance with ASTM A 82. Provide specimens for testing when required by Project Manager.

1.05 HANDLING AND STORAGE

A. Do not mix different classes of aggregate without written permission of Project Manager.

B. Class of aggregate being used may be changed before or during Work with written permission of Project Manager. Comply new class with specifications.

C. Reject segregated aggregate. Before using aggregate whose particles are separated by size, mix them uniformly to grading requirements.

D. Reject aggregates mixed with dirt, weeds, or foreign matter.

E. Do not dump or store aggregate in roadbed.

PART 2 PRODUCTS

2.01 MATERIALS

A. Portland Cement:

1. Sample and test cement to verify compliance with Standards of ASTM C 150, Type I or Type III.

2. Bulk cement which meets referenced standards may be used when method of handling is approved by Project Manager. When using bulk cement, provide satisfactory weighing devices.

3. Fly ash which meets standards of ASTM C 618 may be used as mineral fill when method of handling is approved by Project Manager.

B. Water: Conform to requirements for water in ASTM C 94.

C. Coarse Aggregate: Crushed stone, gravel, or combination thereof, which is clean, hard, and durable, conforms to requirements of ASTM C 33, and has abrasion loss not more than 45 percent by weight when subjected to Los Angeles Abrasion Test (ASTM C 131).

1. Maximum percentage by weight of deleterious substances shall not exceed following values:

Item	Percent by Weight of Total Sample Maximum
Clay lumps and friable particles	3.0
Material finer than 75-µm (No. 200) sieve:	
Concrete subject to abrasion	3.0*
All Other concrete	5.0*
Coal and lignite:	
Where surface appearance of concrete is of importance	0.5
All other concrete	1.0

* In case of manufactured sand, when material finer than 75-µm (No. 200) sieve consists of dust of fracture, essentially free from clay or shale, these limits may be increased to 5 and 7 percent, respectively.

2. Conform coarse aggregate (size 1 1/2 inch to No. 4 sieve) to requirements of ASTM C 33. Use gradation within following limits when graded in accordance with ASTM C 136:

Sieve Designation (Square Openings)	Percentage by Weight
Retained on 1 3/4" sieve	0
Retained on 1 1/2"sieve	0 to 5
Retained on 3/4" sieve	30 to 65
Retained on 3/8" sieve	70 to 90
Retained on No. 4 sieve	95 to 100
Loss by Decantation Test	
*Method Tex-406-A	1.0 maximum

* In case of aggregates made primarily from crushing of stone, when material finer than 200 sieve is dust of fracture essentially free from clay or shale as established by Part III of TxDOT Tex-406-A, percent may be increased to 1.5.

D. Fine Aggregate: Sand, manufactured sand, or combination thereof, composed of clean, hard, durable, uncoated grains, free from loams or other injurious foreign matter. Conform fine aggregate for concrete to requirements of ASTM C 33. Use gradation within following limits when graded in accordance with ASTM C 136:

Sieve Designation (Square Openings)	Percentage by Weight

Retained on 3/8" sieve	0
Retained on No. 4 sieve	0 to 5
Retained on No. 8 sieve	0 to 20
Retained on No. 16 sieve	15 to 50
Retained on No. 30 sieve	35 to 75
Retained on No. 50 sieve	65 to 90
Retained on No. 100 sieve	90 to 100
Retained on No. 200 sieve	97 to 100

1. When subjected to color test for organic impurities (ASTM C 40), fine aggregate shall not show color darker than standard color. Fine aggregate shall be subjected to Sand Equivalent Test (Tex-203-F). Sand equivalent value shall not be less than 80, unless higher value is shown on Drawings.

E. Mineral Filler: Type "C" or Type "F" fly ash of acceptable quality and meeting requirements of ASTM C 618 may be used as mineral admixture in concrete mixture. When fly ash mineral filler is used, store and inspect in accordance with ASTM C 618. Do not use fly ash in amounts to exceed 25 percent by weight of cementatious material in mix design. Cement content may be reduced when strength requirements can be met. Note: When fly ash is used, term "cement" is defined as cement plus fly ash.

F. Air Entraining Agent: Furnish air entraining agent conforming to requirements of ASTM C 260.

G. Water Reducer: Water reducing admixture conforming to requirements of ASTM C 494 may be used when required to improve workability of concrete. Amount and type of admixture is subject to approval by Project Manager.

H. Reinforcing Steel:

1. Provide new billet steel manufactured by open hearth process and conforming to ASTM A 615, Grade 60. Store steel to protect it from mechanical injury and rust. At time of placement, steel shall be free from dirt, scale, rust, paint, oil, or other injurious materials.

2. Cold bend reinforcing steel to shapes shown. Once steel has been bent, it may not be rebent.

3. Provide wire fabric conforming to ASTM A 82. Use fabric in which longitudinal and transverse wires have been electrically welded at points of intersection. Welds shall have sufficient strength not to be broken during handling or placing. Conform welding and fabrication of fabric sheets to ASTM A 185.

2.02 EQUIPMENT

A. Conform Equipment to requirements of ASTM C94.

2.03 MIXING

A. Flexural strength shall be as specified using test specimens prepared in accordance with ASTM C 31 and tested in accordance with ASTM C78 (using simple beam with third-point loading). Compressive strength shall be as specified using test specimens prepared in accordance with ASTM C 31 and tested in accordance with ASTM C 39. Determine and measure batch quantity of each ingredient, including water for batch designs and all concrete produced for Work. Mix shall conform to these specifications and other requirements indicated on Drawings.

B. Mix design to produce concrete which will have flexural strength of 500 psi at 7 days and 600 psi at 28 days. Minimum compressive strength shall be 3000 pounds per square inches for 7 days and 3500 pounds per square inches at 28 days when tested in accordance with ASTM C39. Slump of concrete shall be at least 2 inches but no more than 5 inches, when tested in accordance with ASTM C143.

1. Concrete pavement, including curb, curb and gutter, and saw-tooth curb, shall contain at least 5 1/2 sacks (94 pounds per sack) of cement per cubic yard, with not more than 6.5 gallons of water, net, per sack of cement (water-cement ratio maximum 0.57). Determine cement content in accordance with ASTM C 138. Addition of mineral filler may be used to improve workability or plasticity of concrete to limits specified.

2. Coarse dry aggregate shall not exceed 85 percent of loose volume of concrete.

3. Add air-entraining admixture to ensure uniform distribution of agent throughout batch. Base air content of freshly mixed air-entrained concrete upon trial mixes with materials to be used in Work, adjusted to produce concrete of required plasticity and workability. Percentage of air entrainment in mix shall be 4 1/2 percent plus or minus 1 1/2 percent. Determine air content by testing in accordance with ASTM C 231.

4. Use retardant when temperature exceeds 90 degrees F. Proportion as recommended by manufacturer. Use same brand as used for air-entraining agent. Add and batch material using same methods as used for air-entraining agent.

C. Use high early strength concrete pavement to limits shown on Drawings. Design to meet following:

1. Concrete Mix: Flexural strength greater than or equal to 500 psi at 72 hours.

2. Cement: Minimum of 7 sacks of cement per cubic yard of concrete.

3. Water-Cement Ratio maximum of 0.45. Slump of concrete shall a maximum of 5 inches, when tested in accordance with ASTM C 143.

4. Other requirements for proportioning, mixing, execution, testing, etc., shall be in accordance with this Section 02751 - Concrete Paving.

PART 3 EXECUTION

3.01 EXAMINATION

A. Verify compacted base is ready to support imposed loads and meets compaction requirements.

B. Verify lines and grades are correct.

3.02 PREPARATION

A. Properly prepare, shape and compact each section of subgrade before placing forms, reinforcing steel or concrete. After forms have been set to proper grade and alignment, use subgrade planer to shape subgrade to its final cross section. Check contour of subgrade with template.

B. Remove subgrade that will not support loaded form. Replace and compact subgrade to required density.

3.03 EQUIPMENT

A. Alternate equipment and methods, other than those required by this Section, may be used provided equal or better results will be obtained. Maintain equipment for preparing subgrade and for finishing and compacting concrete in good working order.

B. Subgrade Planer and Template:

1. Use subgrade planer with adjustable cutting blades to trim subgrade to exact section shown on Drawings. Select planer mounted on visible rollers which ride on forms. Planer frame must have sufficient weight so that it will remain on form, and have strength and rigidity that, under tests made by changing support from wheels to center, planer will not develop deflection of more than 1/8 inch. Tractors used to pull planer shall not produce ruts or indentations in subgrade. When slip form method of paving is used, operate subgrade planer on prepared track grade or have it controlled by electronic sensor system operated from string line to establish horizontal alignment and elevation of subbase.

2. Provide template for checking contour of subgrade. Template shall be long enough to rest upon side forms and have strength and rigidity that, when supported at center, maximum deflection shall not exceed 1/8 inch. Fit template with accurately adjustable rods projecting downward at 1 foot intervals. Adjust these rods to gauge cross sections of slab bottom when template is resting on side forms.

C. Machine Finisher: Provide power-driven, transverse finishing machine designed and operated to strike off and consolidate concrete. Machine shall have two screeds accurately adjusted to crown of pavement and with frame equipped to ride on forms. Use finishing machine with rubber tires when it operates on concrete pavement.

D. Hand Finishing:

1. Provide mechanical strike and tamping template 2 feet longer than width of pavement to be finished. Shape template to pavement section.

2. Provide two bridges to ride on forms and span pavement for finishing expansion and dummy joints. Provide floats and necessary edging and finishing tools.

E. Burlap Drag or transverse broom for Finishing Slab: Furnish four plies of 10 ounce burlap material fastened to bridge to form continuous strip of burlap full width of pavement. Maintain contact 3 foot width of burlap material with pavement surface. Keep burlap drags clean and free of encrusted mortar.

F. Vibrators: Furnish mechanically-operated, synchronized vibrators mounted on tamping bar which rides on forms and hand-manipulated mechanical vibrators. Furnish vibrators with frequency of vibration to provide maximum consolidation of concrete without segregation.

G. Traveling Form Paver: Approved traveling form paver may be used in lieu of construction methods employing forms, consolidating, finishing and floating equipment. Meet requirements of this specification for subgrade, pavement tolerances, pavement depth, alignments, consolidation, finishing and workmanship. When traveling form paver does not provide concrete paving that meets compaction, finish, and tolerance requirements of this Specification, immediately discontinue its use and use conventional methods.

1. Equip traveling paver with longitudinal transangular finishing float adjustable to crown and grade. Use float long enough to extend across pavement to side forms or edge of slab.

2. Ensure that continuous deposit of concrete can be made at paver to minimize starting and stopping. Use conventional means of paving locations inaccessible to traveling paver, or having horizontal or vertical curvature that traveling paver cannot negotiate.

3. Where Drawings require tie bars for adjacent paving, securely tie and support bars to prevent displacement. Tie bars may be installed with approved mechanical bar inserter mounted on traveling-form paver. Replace pavement in which tie bars assume final position other than that shown on Drawings.

3.04 FORMS

A. Side Forms: Use metal forms of approved shape and section. Preferred depth of form is equal to required edge thickness of pavement. Forms with depths greater or less than

required edge thickness of pavement will be permitted, provided difference between form depth and edge thickness when not greater than 1 inch, and further provided that forms of depth less than pavement edge are brought to required edge thickness by securely attaching wood or metal strips to bottom of form, or by grouting under form. Bottom flange of form shall be same size as thickness of pavement. Aluminum forms are not allowed. Forms shall be approved by Project Manager. Length of form sections shall be not less than 10 feet and each section shall provide for staking in position with not less than 3 pins. Flexible or curved forms of wood or metal of proper radius shall be used for curves of 200 foot radius or less. Forms shall have ample strength and shall be provided with adequate devices for secure setting so that when in-place they will withstand, without visible springing or settlement, impact and vibration of finishing machine. In no case shall base width be less than 8 inches for form 8 inches or more in height. Forms shall be free from warp, bends or kinks and shall be sufficiently true to provide straight edge on concrete. Top of each form section, when tested with straight edge, shall conform to requirements specified for surface of completed pavement. Provide sufficient forms for satisfactory placement of concrete. For short radius curves, forms less than 10 feet in length or curved forms may be used. For curb returns at street intersections and driveways, wood forms of good grade and quality may be used.

B. Form Setting:

1. Rest forms directly on subgrade. Do not shim with pebbles or dirt. Accurately set forms to required grade and alignment and, during entire operation of placing, compacting and finishing of concrete, do not deviate from this grade and alignment more than 1/8 inch in 10 feet of length. Do not remove forms for at least 8 hours after completion of finishing operations. Provide supply of forms that will be adequate for orderly and continuous placing of concrete. Set forms and check grade for at least 300 feet ahead of mixer or as approved by Project Manager.

2. Adjacent slabs may be used instead of forms, provided that concrete is well protected from possible damage by finishing equipment. Do not use adjacent slabs for forms until concrete has aged at least 7 days.

3.05 REINFORCING STEEL AND JOINT ASSEMBLIES

A. Place reinforcing steel and joint assemblies and position securely as indicated on Drawings. Wire reinforcing bars securely together at intersections and splices. Bars and coatings shall be free of rust, dirt or other foreign matter when concrete is placed. Secure reinforcing steel to chairs.

B. Position pavement joint assemblies at required locations and elevations, and rigidly secure in position. Install dowel bars in joint assemblies, each parallel to pavement surface and to center line of pavement, as shown.

C. Cut header boards, joint filler, and other material used for forming joints to receive each dowel bar.

D. Secure in required position to prevent displacement during placing and finishing of concrete.

E. Drill dowels into existing pavement, secure with epoxy, and provide paving headers as required to provide rigid pavement sections.

F. Use sufficient number of chairs for steel reinforcement bars to maintain position of bars within allowable tolerances. Place reinforcement as shown on Drawings. In plane of steel parallel to nearest surface of concrete, bars shall not vary from plan placement by more than 1/12 of spacing between bars. In plane of steel perpendicular to nearest surface of concrete, bars shall not vary from plan placement by more than 1/4 inch.

3.06 FIBROUS REINFORCING

A. Do not use fibrous reinforcing to replace structural, load-bearing, or moment-reinforcing steel.

3.07 PLACEMENT

A. Place concrete when air temperature taken in shade and away from artificial heat is above 35 degrees F and rising. Do not place concrete when temperature is below 40 degrees F and falling.

B. Place concrete within 90 minutes after initial water had been added. Remove and dispose of concrete not placed within this period.

C. Concrete slump during placement shall be 1 to 5 inches, except when using traveling-form paver, slump shall be maximum of 2 inches.

D. Deposit concrete continuously in successive batches. Distribute concrete in manner that will require as little rehandling as possible. Where hand spreading is necessary, distribute concrete with shovels or by other approved methods. Use only concrete rakes in handling concrete. At placement interruption of more than 30 minutes, place transverse construction joint at stopping point. Remove and replace sections less than 10 feet long.

E. Take special care in placing and spading concrete against forms and at longitudinal and transverse joints to prevent honeycombing. Voids in edge of finished pavement will be cause for rejection.

3.08 COMPACTION

A. Consolidate concrete using mechanical vibrators as specified herein. Extend vibratory unit across pavement, not quite touching side forms. Space individual vibrators at close enough intervals to vibrate and consolidate entire width of pavement uniformly. Mount mechanical vibrators to avoid contact with forms, reinforcement, transverse or longitudinal joints.

B. Furnish enough hand-manipulated mechanical vibrators for proper consolidation of concrete along forms, at joints and in areas not covered by mechanically controlled vibrators.

3.09 FINISHING

A. Finish concrete pavement with power-driven transverse finishing machines or by hand finishing methods.

1. Hand finish with mechanical strike and tamping template in same width as pavement to be finished. Shape template to pavement section shown on Drawings. Move strike template forward in direction of placement, maintaining slight excess of material in front of cutting edge. Make minimum of two trips over each area. Screed pavement surface to required section. Work screed with combined transverse and longitudinal motion in direction work is progressing. Maintain screed in contact with forms. Use longitudinal float to level surface.

B. On narrow strips and transitions, finish concrete pavement by hand. Thoroughly work concrete around reinforcement and embedded fixtures. Strike off concrete with strike-off screed. Move strike-off screed forward with combined transverse and longitudinal motion in direction work is progressing, maintaining screed in contact with forms, and maintaining slight excess of materials in front of cutting edge. Tamp concrete with tamping template. Use longitudinal float to level surface.

C. After completion of straightedge operation, make first pass of burlap drag or transverse broom as soon as construction operations permit and before water sheen has disappeared from surface. Follow with as many passes as required to produce desired texture depth. Permit no unnecessary delays between passes. Keep drag wet, clean and free from encrusted mortar during use.

3.10 JOINTS AND JOINT SEALING

A. Conform to requirements of Section 02752 - Concrete Pavement Joints.

3.11 CONCRETE CURING

A. Conform to requirements of Section 02753 - Concrete Pavement Curing.

3.12 TOLERANCES

A. Test entire surface before initial set and correct irregularities or undulations. Bring surface within requirements of following test and then finish. Place 10 foot straightedge parallel to center of roadway to bridge depressions and touch high spots. Do not permit ordinates measured from face of straight edge to surface of pavement to exceed 1/16 inch per foot from nearest point of contact. Maximum ordinate with 10 foot straightedge shall not exceed 1/8 inch. Grind spots in excess of required tolerances to meet surface test requirements. Restore texture by grooving concrete to meet surface finishing specifications.

3.13 FIELD QUALITY CONTROL

A. Perform testing under provisions of Section 01454 - Testing Laboratory Services.

B. Compressive Strength Test Specimens: Make four test specimens for compressive strength test in accordance with ASTM C 31 for each 150 cubic yards or less of pavement that is placed in one day. Test two specimens at 7 days or at number of hours as directed by the Project Manager for high early strength concrete. Test remaining two specimens at 28 days. Test specimens in accordance with ASTM C 39. Minimum compressive strength shall be 3000 pounds per square inch for first two specimens and 3500 pounds per square inch at 28 days.

C. When compressive test indicates failure, make yield test in accordance with ASTM C 138 for cement content per cubic yard of concrete. When cement content is found to be less than that specified per cubic yard, increase batch weights until amount of cement per cubic yard of concrete conforms to requirements.

D. Minimum of one 4 inch core will be taken at random locations per 375 feet per 12 feet lane or 500 square yards of pavement to measure in-place depth. Measure depth in accordance with ASTM C 174. Each core may be tested for 28 day compressive strength according to methods of ASTM C 42. 28 day compressive strength of each core tested shall be a minimum of 3000 pounds per square inch.

E. Request, at option, three additional cores in vicinity of cores indicating nonconforming in-place depths at no cost to City. In-place depth at these locations shall be average depth of four cores.

F. Fill cores and density test sections with new concrete paving or non shrink grout.

3.14 NONCONFORMING PAVEMENT

A. Remove and replace areas of pavement found deficient in thickness by more than 10 percent, or that fail compressive strength tests, with concrete of thickness shown on Drawings.

B. When measurement of any core is less than specified thickness by more than 10 percent, actual thickness of pavement in this area will be determined by taking additional cores at 10 foot intervals parallel to centerline in each direction from deficient core until, in each direction, core is taken which is not deficient by more than 10 percent. Exploratory cores for

deficient thickness will not be used in averages for adjusted unit price. Exploratory cores are to be used only to determine length of pavement in unit that is to be removed and replaced. Replace nonconforming pavement sections at no additional cost to City.

3.15 UNIT PRICE ADJUSTMENT

A. Unit price adjustments shall be made for in-place depth determined by cores as follows:

1. Adjusted Unit Price shall be ratio of average thickness as determined by cores to thickness bid upon, times unit price.

2. Apply adjustment to lower limit of 90 percent and upper limit of 100 percent of unit price.

3. Average depth below 90 percent but greater than 80 percent may be accepted by Project Manager at adjusted Unit Price of:

   a. Unit Price Bid - [2 x (1-ratio) x Unit Price Bid]

   b. Ratio equals average core thickness divided by thickness bid upon

   c. 0.9 ratio pays 80 percent of unit price and 0.8 ratio pays 60 percent of unit price.

4. Average depth below 80 percent will be rejected by Project Manager.

3.16 PAVEMENT MARKINGS

A. Restore pavement markings to match those existing in accordance with City of Houston standard specifications and details and Project Manager's requirements.

3.17 PROTECTION

A. Barricade pavement section to prevent use until concrete has attained minimum design strength. Cure barricade pavement section for minimum 72 hours before use. Do not open pavement to traffic until concrete is at least 10 days old. Pavement may be open to traffic earlier provided Contractor pays for testing and additional specimen once 7 day specified strength is obtained. Pavement may be opened when high early strength concrete is used meeting specified 72 hour strength.

B. High early strength concrete may be used to provide access at driveways, street intersections, esplanades and other locations approved by Project Manager.

C. On those sections of pavement to be opened to traffic, seal joints, clean pavement, and place earth against pavement edges before permitting use by traffic. Opening of pavement to traffic shall not relieve responsibility for Work.

D. Maintain concrete paving in good condition until completion of Work.

E. Repair defects by replacing concrete to full depth.

END OF SECTION

Section 02752

CONCRETE PAVEMENT JOINTS

PART 1 GENERAL

1.01 SECTION INCLUDES

A. Joints for concrete paving; concrete sidewalks, concrete driveways, curbs, and curb and gutters.

B. Saw-cutting existing concrete or asphalt pavements for new joints.

1.02 MEASUREMENT AND PAYMENT

A. Unit Prices.

1. Payment for street pavement expansion joints, with or without load transfer, is on linear foot basis.

2. Payment for horizontal dowels is on a unit price basis for each horizontal dowel.

3. No separate payment will be made for formed or sawed street pavement contraction joints and longitudinal weakened plane joints. Include payment in unit price for Concrete Paving.

4. No separate payment will be made for joints for Curb, Curb and Gutter, Saw-tooth Curb, Concrete Sidewalks, and Concrete Driveways. Include payment in unit price for Curb and Gutter, Concrete Sidewalks, and Concrete Driveways.

5. Payment will be made for Preformed Expansion Joints on a linear foot basis only when field conditions require that sidewalk be moved adjacent to existing concrete structure (i.e., street, back of curb, etc.).

6. Refer to Section 01270 - Measurement and Payment for unit price procedures.

B. Stipulated Price (Lump Sum). If Contract is Stipulated Price Contract, payment for work in this Section is included in total Stipulated Price.

1.03 REFERENCES

A. ASTM A 615 - Standard Specification for Deformed and Plain Billet-Steel Bars for Concrete Reinforcement.

B. ASTM D 994 - Standard Specification for Preformed Expansion Joint Filler for Concrete (Bituminous Type).

C. ASTM D 1751 - Standard Specification for Preformed Expansion Joint Filler for Concrete Paving and Structural Construction (Nonextruding and Resilient Bituminous Types).

D. ASTM D 3405 - Standard Specification for Joint Sealants, Hot-Applied, for Concrete and Asphalt Pavements.

E. TxDOT Tex-525-C - Tests for Asphalt and Concrete Joint Sealers

1.04 SUBMITTALS

A. Conform to requirements of Section 01330 - Submittal Procedures.

B. Submit product data for joint sealing compound and proposed sealing equipment for approval.

C. Submit samples of dowel cup, metal supports, and deformed metal strip for approval. Submit manufacturer's recommendation for placing sealant(s).

PART 2 PRODUCTS

2.01 BOARD EXPANSION JOINT MATERIAL

A. Filler board of selected stock. Use wood of density and type as follows:

1. Clear, all-heart cypress weighing no more than 40 pounds per cubic foot, after being oven dried to constant weight.

2. Clear, all-heart redwood weighing no more than 30 pounds per cubic foot, after being oven dried to constant weight.

2.02 PREFORMED EXPANSION JOINT MATERIAL

A. Bituminous fiber and bituminous mastic composition material conforming to ASTM D 994 and ASTM D 1751.

2.03 JOINT SEALING COMPOUND

A. Conform joint sealants to one of sealant classes described in this section.

B. Conform hot-poured rubber-asphalt compound to ASTM D 3405.

C. Two-component Synthetic Polymer.

1. Curing is to be by polymerization and not by evaporation of solvent or fluxing of harder particles.

2. Cure sufficiently at average temperature of 25 ∀ 1 C (77 ∀ 2 F) so as not to pick up under wheels of traffic in maximum three hours.

3. Performance requirements, when tested in accordance with TxDOT Tex-525-C, shall meet above curing times and requirements as follows:

Cold-Extruded and Cold-Pourable (Self-Leveling) Specifications	
Property	**Requirement**
Penetration, 25 C (77 F) 150 g Cone, 5 s, 0.1 mm (in.), maximum	130
Bond and Extension 50%, -29 C (-20 F), 3 cycles: X Dry Concrete Block X Steel blocks (Primed, if recommended by manufacturer) *Steel blocks shall be used when armor joints are specified	 Pass Pass
Flow at 70 C (158 F)	None
Water content % by mass, maximum	5.0
Resilience: X Original sample, % min. (cured) X Oven-aged at 70 C (158 F), % min.	 50 50
Cold-extruded material only - Cold Flow (10 minutes)	None

After bond and extension test, there shall be no evidence of cracking, separation or other opening that is over 3 millimeters (1/8 inch) deep in sealer or between sealer and test blocks.

4. Provide cold-extruded type for vertical or sloping joints.

5. Provide self-leveling type for horizontal joints.

D. Self-Leveling, Low Modulus Silicone or Polyurethane Sealant for Asphaltic Concrete and Portland Cement Concrete Joints. This shall be a single component self-leveling silicone or polyurethane material that is compatible with both asphalt and concrete pavements. The sealer shall not require a primer for bond; a backer rod shall be required which is compatible with the sealant; no reaction shall occur between rod and sealant.

When tested in accordance with TxDOT Tex-525-C, self-leveling sealant shall meet following requirements:

Self-Leveling, Low Modulus Silicone or Polyurethane Sealant	
Property	**Requirements**
Tack Free Time, 25 ∀ 1 C (77 ∀ 2 F), minutes	120 maximum
Nonvolatile content, % by mass	93 minimum
Tensile Strength and 24 Hour Extension Test: X Initial, 10-day cure, 25 ∀ 1 C (77 ∀ 2 F), kPa (psi) X After Water Immersion, kPa (psi) X After Heat Aging, kPa (psi) X After Cycling, -29 C (-20 F), 50%, 3 cycles, kPa (psi) X 24 Hour Extension	 X 21 to 69 (3 to 10) X 21 to 69 (3 to 10) X 21 to 69 (3 to 10) X 21 to 69 (3 to 10) X Pass (All Specimens) After 24 hours, there shall be no evidence of cracking, separation or other opening that is over 3 mm (1/8 in.) deep at any point in the sealer or between the sealer and test blocks.

2.04 LOAD TRANSMISSION DEVICES

A. Smooth, steel dowel bars conforming to ASTM A 615, Grade 60. When indicated on Drawings, encase one end of dowel bar in approved cap having inside diameter 1/16 inch greater than diameter of dowel bar.

B. Deformed steel tie bars conforming to ASTM A 615, Grade 60.

2.05 SUPPORTS FOR REINFORCING STEEL AND JOINT ASSEMBLY

A. Employ supports of approved shape and size that will secure reinforcing steel and joint assembly in correct position during placing and finishing of concrete. Space supports as directed by Project Manager.

PART 3 EXECUTION

3.01 PLACEMENT

A. When new Work is adjacent to existing concrete, place joints at same location as existing joints in adjacent pavement.

B. If limit of removal of existing concrete or asphalt pavement does not fall on existing joint, saw cut existing pavement minimum of 2 inches deep to provide straight, smooth joint surface without chipping, spalling or cracks.

3.02 CONSTRUCTION JOINTS

A. Place transverse construction joint wherever concrete placement must be stopped for more than 30 minutes. Place longitudinal construction joints at interior edges of pavement lanes using No. 6 deformed tie bars, 30 inches long and spaced 18 inches on centers.

3.03 EXPANSION JOINTS

A. Place 3/4 inch expansion joints at radius points of curb returns for cross street intersections, or as located in adjacent pavement but no further than 80 feet apart. Use no boards shorter than 6 feet. When pavement is 24 feet or narrower, use not more than 2 lengths of board. Secure pieces to form straight joint. Shape board filler accurately to cross section of concrete slab. Use load transmission devices of type and size shown on Drawings unless otherwise specified or shown as "No Load Transfer Device." Seal with joint sealing compound.

3.04 CONTRACTION JOINTS

A. Place contraction joints at same locations as in adjacent pavement or at spaces indicated on Drawings. Place smoothed, painted and oiled dowels accurately and normal to joint. Seal groove with joint sealing compound.

3.05 LONGITUDINAL WEAKENED PLANE JOINTS

A. Place longitudinal weakened plane joints at spaces indicated on Drawings. If more than 15 feet in width is poured, longitudinal joint must be saw cut. Seal groove with joint sealing compound.

3.06 SAWED JOINTS

A. Use sawed joints as alternate to contraction and weakened plane joints. Use circular cutter capable of cutting straight line groove minimum of 1/4 inch wide. Maintain depth of one quarter of pavement thickness. Commence sawing as soon as concrete has hardened sufficiently to permit cutting without chipping, spalling or tearing and prior to initiation of cracks. Once sawing has commenced, continue until completed. Make saw cut with one pass. Complete sawing within 24 hours of concrete placement. Saw joints at required spacing consecutively in sequence of concrete placement.

B. Concrete Saw: Provide sawing equipment adequate in power to complete sawing to required dimensions and within required time. Maintain ample supply of saw blades at work site during sawing operations. Maintain sawing equipment on job during concrete placement.

3.07 JOINTS FOR CURB, CURB AND GUTTER

A. Place 3/4 inch preformed expansion joints through curb and gutters at locations of expansion and contraction joints in pavement, at end of radius returns at street intersections and driveways, and at curb inlets. Maximum spacing shall be 120-foot centers.

3.08 JOINTS FOR CONCRETE SIDEWALKS

A. Provide 3/4 inch expansion joints conforming to ASTM A 1751 along and across sidewalk at back of curbs, at intersections with driveways, steps, and walls; and across walk at intervals not to exceed 36 feet. Provide expansion joint material conforming to ASTM D 994 for small radius curves and around fire hydrants and utility poles. Extend expansion joint material full depth of slab.

3.9 JOINTS FOR CONCRETE DRIVEWAYS

A. Provide 3/4-inch expansion joints conforming to ASTM D 1751 across driveway in line with street face of sidewalks, at existing concrete driveways, and along intersections with sidewalks and other structures. Extend expansion joint material full depth of slab.

3.10 JOINT SEALING

A. Seal joints only when surface and joints are dry, ambient temperature is above 50 degrees F and less than 85 degrees F and weather is not foggy or rainy.

B. Use joint sealing equipment in like new working condition throughout joint sealing operation, and be approved by Project Manager. Use concrete grooving machine or power-operated wire brush and other equipment such as plow, brooms, brushes, blowers or hydro or abrasive cleaning as required to produce satisfactory joints.

C. Clean joints of loose scale, dirt, dust and curing compound. The term joint includes wide joint spaces, expansion joints, dummy groove joints or cracks, either preformed or natural. Remove loose material from concrete surfaces adjacent to joints.

D. Fill joints neatly with joint sealer to depth shown. Pour sufficient joint sealer into joints so that, upon completion, surface of sealer within joint will be 1/4 inch above level of adjacent surface or at elevation as directed.

3.11 PROTECTION

A. Maintain joints in good condition until completion of Work.

B. Replace damaged joints material with new material as required by this Section.

END OF SECTION

Section 02753

CONCRETE PAVEMENT CURING

PART 1 GENERAL

1.01 SECTION INCLUDES

A. Curing of Portland cement concrete paving.

1.02 MEASUREMENT AND PAYMENT

A. Unit Prices.

1. No separate payment will be made for concrete curing under this Section. Include payment in unit price for Concrete Paving, Concrete Sidewalks, Concrete Driveways, Curbs, and Curb and Gutters.

2. Refer to Section 01270 - Measurement and Payment for unit price procedures.

B. Stipulated Price (Lump Sum). If Contract is Stipulated Price Contract, payment for work in this Section is included in total Stipulated Price.

1.03 REFERENCES

A. ASTM C 156 - Standard Test Method for Water Retention by Concrete Curing Materials.

B. ASTM C 171 - Standard Specifications for Sheet Materials for Curing Concrete.

C. ASTM C 309 - Standard Specifications for Liquid Membrane-Forming Compounds for Curing Concrete.

1.04 SUBMITTALS

A. Conform to requirements of Section 01330 - Submittal Procedures.

B. Submit manufacturer's product data for cover materials and liquid membrane-forming compounds.

PART 2 PRODUCTS

2.01 COVER MATERIALS FOR CURING

A. Conform curing materials to one of the following:

1. Polyethylene Film: Opaque pigmented white film conforming to requirements of ASTM C 171.

2. Waterproofed Paper: Paper conforming to requirements of ASTM C 171.

3. Cotton Mats: Single layer of cotton filler completely enclosed in cover of cotton cloth. Mats shall contain not less than 3/4 of a pound of uniformly distributed cotton filler per square yard of mat. Cotton cloth used for covering materials shall weigh not less than 6 ounces per square yard. Stitch mats so that mat will contact surface of pavement at all points when saturated with water.

2.02 LIQUID MEMBRANE-FORMING COMPOUNDS

A. Conform liquid membrane-forming compounds to ASTM C 309. Membrane shall restrict loss of water to not more than 0.55 kg/m^2 in 72 hours using test method ASTM C 156.

PART 3 EXECUTION

3.01 CURING REQUIREMENT

A. Cure concrete pavement by protecting against loss of moisture for period of not less than 72 hours immediately upon completion of finishing operations. Do not use membrane curing for concrete pavement to be overlaid by asphalt concrete.

B. Failure to provide sufficient cover material shall be cause for immediate suspension of concreting operations.

3.02 POLYETHYLENE FILM CURING

A. Immediately after finishing surface, and after concrete has taken its initial set, apply water in form of fine spray. Cover surface with polyethylene film so film will remain in direct contact with surface during specified curing period.

B. Cover entire surface and both edges of pavement slab. Overlap joints in film sheets minimum of 12 inches. Immediately repair tears or holes occurring during curing period by placing acceptable moisture-proof patches or replacing.

3.03 WATERPROOFED PAPER CURING

A. Immediately after finishing surface, and after concrete has taken its initial set, apply water in form of fine spray. Cover surface with waterproofed paper so paper will remain in direct contact with surface during specified curing period.

B. Prepare waterproofed paper to form blankets of sufficient width to cover entire surface and both edges of pavement slab, and not be more than 60 feet in length. Overlap joints in blankets caused by joining paper sheets not less than 5 inches and securely seal with asphalt cement having melting point of approximately 180 degrees F. Place blankets to secure overlap of at least 12 inches. Immediately repair tears or holes appearing in paper during curing period by cementing patches over defects.

3.04 COTTON MAT CURING

A. Immediately after finishing surface, and after concrete has taken its initial set, completely cover surface with cotton mats, thoroughly saturated before application, maintaining contact with surface of pavement equally at all points.

B. Keep mats on pavement for specified curing period. Keep mats saturated so that, when lightly compressed, water will drip freely from them. Keep banked earth or cotton mat covering edges saturated.

3.05 LIQUID MEMBRANE-FORMING COMPOUNDS

A. Immediately after free surface moisture, and after concrete has dispersed, apply liquid membrane-forming compound in accordance with manufacturer's instructions.

B. Moisten concrete by water fogging prior to application of membrane when surface has become dry.

C. Seal concrete surface with single coat at rate of coverage recommended by manufacturer and directed by Project Manager, but not less than one gallon per 200 square feet of surface area.

3.06 TESTING MEMBRANE

A. Treated areas will be visually inspected for areas of lighter color of dry concrete as compared to dump concrete. Test suspected areas by placing few drops of water on surface. Membrane passes test when water stands in rounded beads or small pools which can be blown along surface of concrete without wetting surface.

B. Reapply membrane compound immediately at no cost to City when membrane fails above test.

END OF SECTION

THIS PAGE IS INTENTIONALLY LEFT BLANK.

Section 02767

THERMOPLASTIC PAVEMENT MARKINGS

PART 1 GENERAL

1.01 SECTION INCLUDES

A. This item includes the application of thermoplastic pavement markings, in conformance with the minimum optical and physical properties required for a thermoplastic road marking compound described herein, in a molten state, onto a pavement surface.

1.02 MEASUREMENT AND PAYMENT

A. Unit Prices

1. Payment for thermoplastic pavement markings is on a linear foot basis.

2. Payment for words and symbols is for each word or symbol.

3. Payment for railroad crossing markings, to include stop line and two transverse lines, is for each crossing marked. For multi-lane approaches to railroad crossings, the solid 8-inch lines will be measured in linear feet, complete in place.

4. Unit price bid for each item shall be full compensation for materials, application of pavement markings, equipment, labor, tools, and incidentals necessary to complete Work in accordance with the plans and specifications.

B. Stipulated Price (Lump Sum). When Contract is Stipulated Price Contract, payment for work in the Section is included in total Stipulated Price.

1.03 MATERIAL

A. All materials shall conform to the requirements of TxDOT DMS-8220 "Hot Applied Thermoplastic." Thermoplastic materials shall be stored in a dry environment to minimize the amount of moisture retained during storage.

1.04 EQUIPMENT

A. Provide the necessary equipment to conduct the work specified herein. All equipment shall be maintained in good working order such that neat and clean thermoplastic markings are applied at the proper thicknesses and glass beads are placed at the correct rate. Equipment that is deemed deficient by the Engineer shall be replaced immediately.

PART 2 PRODUCTS

2.01 CONSTRUCTION

The appearance of the finished markings shall have a uniform surface, crisp edges with a minimum over-spray, clean cut-off, meet straightness requirements and conform to the design drawings and/or engineer instructions.

The contractor shall provide the Engineer with certification from the marking manufacturer that contractor has been adequately trained and certified to apply the manufacturer's material. This certification shall be considered current if the certification date provided by the manufacturer is within two years of the date of marking application.

All striping and pavement markings shall be placed in accordance with the requirements of this specification, the detailed plans, and the current edition of the *Texas Manual on Uniform Traffic Control Devices* (TMUTCD). The Contractor shall provide all other engineering services necessary for pre-marking of all proposed stripe within the limits of the designated work.

Unless authorized otherwise in writing by the Engineer, striping shall be accomplished during daylight hours. Approved lighting arrangements will be required for night time operations when allowed. The Contractor may be required to place markings over existing markings, as determined by the Engineer. The Contractor shall adjust the operation of the thermoplastic screed shoe to match the previous lengths of stripes and skips, when necessary.

Failure of the striping material to adhere to the pavement surface during the life of the contract shall be prima facie evidence that the materials, even though complying with these specifications, or the application thereof, was inconsistent with the intent of the requirements for the work under the latest City specifications and shall be cause for ordering corrective action or replacement of the marking without additional cost to the City.

Unless otherwise approved by the Engineer, permanent pavement markings on newly constructed pavements surfaced with asphaltic concrete or bituminous seals shall not be applied for a minimum of 14 days or a maximum 35 days. Temporary pavement marking shall be provided during the 14 to 35 day period.

A. Surface Preparation.

1. Moisture. All surfaces shall be inspected for moisture content prior to application of thermoplastic. Approximately two square feet of a clear plastic or tar paper shall be laid on the road surface and held in place for 15 to 20 minutes. The underside of the plastic or tar paper shall then be inspected for a buildup of condensed moisture from the road surface. Pavement is considered dry if there is

no condensation on the underside of the plastic or tarpaper. In the event of moisture, this test shall be repeated until there is no moisture on the underside of the plastic or tar paper.

2. Cleaning. All surfaces shall be clean and dry, as defined in Section 535.4.A.1, before thermoplastic can be applied. Loose dirt and debris shall be removed by thoroughly blowing compressed air over the area to be striped. If the thermoplastic is to be applied over existing paint lines, the paint line shall be swept with a mechanical sweeper or wirebrush to remove poorly adhered paint and dirt that would interfere with the proper bonding or the thermoplastic. Additional cleaning through the use of compressed air may be required to remove embedded dirt and debris after sweeping. Latence and curing compound shall be removed from all new portland cement concrete surfaces in accordance with Section 02762, "Blast Cleaning of Pavement."

3. Layout. The pavement markings shall be placed in proper alignment with guidelines established on the roadway. Deviation from the alignment established shall not exceed 2 inches and, in addition, the deviation in alignment of the marking being placed shall not exceed 1 inch per 200 feet of roadway nor shall any deviation be abrupt.

   No striping material shall be applied over a guide cord; only longitudinal joints, existing stripes, primer, or other approved type guides will be permitted. In the absence of a longitudinal joint or existing stripe, the Contractor shall mark the points necessary for the placing of the proposed stripe. Edge striping shall be adjusted as necessary so that the edge stripe will be parallel to the centerline and shall not be placed off the edge of the pavement.

   Longitudinal markings shall be offset at least 2-inches from construction joints of portland cement concrete surfaces and joints and shoulder breaks of asphalt surfaces.

4. Primer Sealer. Primer sealer shall be used on all portland cement concrete surfaces. A primer sealer shall be used on asphalt surfaces that are over two years old and/or on asphalt surfaces that are worn or oxidized to a condition where 50 percent or more of the wearing surface is exposed aggregate. Existing pavement markings may act as the primer sealer if, after cleaning, more than 70 percent of the existing pavement marking is still properly bonded to the asphalt surface.

5. Primer Sealer Application. When required as described, the primer-sealer shall be applied to the road surface in a continuous film at a minimum thickness of 3 to 5 mils. Before the Thermoplastic is applied, the primer-sealer shall be allowed to dry to a tacky state. The thermoplastic shall be applied within 4 hours after the primer application.

B. Temperature Requirements.

1. Ambient Conditions. The ambient air and road surface shall be 55°F and rising before application of thermoplastic can begin.

2. Material Requirements. Unless otherwise specified by the material manufacturer, the thermoplastic compound shall be heated from 400°F to 450°F and shall be a minimum of 400°F as it makes contact with road surface during application. An infrared temperature gun shall be used to determine the temperature of the thermoplastic as it is being applied to the road surface.

C. Drop-on Glass Sphere Application.

1. Application Rate. Retro-reflective glass spheres shall be applied at the rate of 10 pounds per 100 square feet of applied markings. This application rate shall be determined by confirming the following consumption rates:

   a. 200 pounds of drop on glass spheres per ton of applied thermoplastic when the thermoplastic is being applied at 0.090 inch film thickness.

   b. 150 pounds of drop on glass spheres per ton of applied thermoplastic when the thermoplastic is being applied at 0.125 inch thickness.

2. Application Method. Retro-reflective glass spheres shall be applied by a mechanical dispenser property calibrated and adjusted to provide proper application rates and uniform distribution of the spheres across the cross section of the entire width of the line. To enable the spheres to embed themselves into the hot thermoplastic, the sphere dispenser shall be positioned immediately behind the thermoplastic application device. This insures that the spheres are applied to the thermoplastic material while it is still in the molten state.

D. Application Thickness.

1. Longitudinal and Transverse Markings. On previously unmarked pavements or pavements where markings have been effectively removed, all lane lines, center lines, transverse markings and pavement markings in traffic areas with ≤1,000 vehicles per day per lane shall have a minimum film thickness of 0.090 inch at the edges and a maximum of 0.145 inch at the center. A minimum average film thickness of 0.090 inch shall be maintained. On pavements with existing markings, meeting the traffic requirements stated above, all lane lines, center lines, transverse markings and pavement markings shall have a minimum film thickness of 0.060 inch for re-application over existing strip line.

2. High Wear Longitudinal and Transverse Marking. On previously unmarked pavements or pavements where markings have been effectively removed, all lane lines, center lines, transverse markings and pavement markings in high traffic areas (>1,000 vehicles per day per lane) shall have a minimum film thickness of

0.125 inch at the edges and a maximum of 0.188 inch at the center. A minimum average film thickness of 0.125 inch shall be maintained. On pavements with existing markings, meeting the traffic requirements stated above, all lane lines, center lines, transverse markings and pavement markings shall have a minimum film thickness of 0.090 inch for re-application over existing strip line.

E. Packaging.

1. Containers. The thermoplastic material shall be delivered in 50 pound containers or bags of sufficient strength to permit normal handling during shipment and handling on the job without loss of material.

2. Labeling. Each container shall be clearly marked to indicate the color of the material, the process batch number and/or manufacturer's formulation number, the manufacturer's name and address and the date of manufacture.

F. Acceptance.

1. Sampling Procedure. Random samples may be taken at the job site at the discretion of the City Traffic Engineer for quality assurance. The City reserves the right to conduct the tests deemed necessary to identify component materials and verify results of specific tests indicated in conjunction with the specification requirements.

   The sample(s) shall be labeled as to the shipment number, lot number, date, quantity, and any other pertinent information. At least three randomly selected bags shall be obtained from each lot. A 10 pound) sample from the three bags shall be submitted for testing and acceptance. The lot size shall be approximately 44,000 pounds unless the total order is less than this amount.

2. Manufacturer's Responsibility.

   a. Sampling and Testing. The manufacturer shall submit test results from an approved independent laboratory. All material samples shall be obtained 20 days in advance of the pavement marking operations. The cost of testing shall be included in the price of thermoplastic material. The approved independent laboratory's test results shall be submitted to the City Traffic Engineer in the form of a certified test report.

   b. Bill of Lading. The manufacturer shall furnish the Material and Tests Laboratory with copies of Bills of Lading for all materials inspected. Bill of lading shall indicate the consignee and the destination, date of shipment, lot numbers, quantity, type of material, and location of source.

   c. Material Acceptance. Final acceptance of a particular lot of thermoplastic will be based on the following.

(1) Compliance with the specification for material composition requirements verified by approved independent laboratory with tests results.

(2) Compliance with the specification for the physical properties required and verified by an approved independent laboratory with test results.

(3) Manufacturer's test results for each lot thermoplastic have been received.

(4) Identification requirements are satisfactory.

3. Contractor's Responsibility.

a. Notification. The contractor shall notify the Construction Inspector 72 hours prior to the placement of the thermoplastic markings to enable the inspector to be present during the application operation. At the time of notification, the Contractor shall indicate the manufacturer and the lot numbers of the thermoplastic that will be used.

A check should be made by the contractor to insure that the approved lot numbers appear on the material package. Failure to do so is cause for rejection.

b. Warranty or Guarantee. If the normal trade practice for manufacturers is to furnish warranties or guarantees for the materials and equipment specified herein, the Contractor shall turn the guarantees and warranties over to the Engineer for potential dealing with the manufacturers. The extent of such warranties or guarantees will not be a factor in selecting the successful bidder.

END OF SECTION

Section 02775

CONCRETE SIDEWALKS

PART 1 GENERAL

1.01 SECTION INCLUDES

A. Reinforced concrete sidewalks.

B. Wheelchair ramps.

C. Reinforced slope paving.

1.02 MEASUREMENT AND PAYMENT

A. Unit Prices.

1. Payment for concrete sidewalks is on square foot basis.

2. No payment will be made for work outside these limits or in areas where driveway has been removed or replaced for Contractor's convenience.

3. Payment for wheelchair ramps of each type specified is on square foot basis. Removal and replacement of existing sidewalk, curb or curb and gutter and saw-cutting is paid by unit cost for each item. Sodding will be paid one foot on each side of sidewalk unless otherwise noted. Staining of wheelchair ramps is included in cost of ramp.

4. Refer to Section 01270 - Measurement and Payment for unit price procedures.

B. Stipulated Price (Lump Sum). If Contract is Stipulated Price Contract, payment for work in this Section is included in total Stipulated Price.

1.03 REFERENCES

A. ASTM C 31 - Standard Practice for Making and Curing Concrete Test Specimens in Field.

B. ASTM C 39 - Standard Test Method for Compressive Strength of Cylindrical Concrete Specimens.

C. ASTM C 42 - Test Method for Obtaining and Testing Drilled Cores and Sawed Beams of Concrete.

D. ASTM C 138 - Standard Test Method for Unit Weight, Yield, and Air Content (Gravimetric) of Concrete.

E. ASTM C 143 - Standard Test Method for Slump of Hydraulic Cement Concrete.

F. ASTM C 172 - Standard Practice for Sampling Freshly Mixed Concrete.

G. ASTM D 698 - Standard Test Methods for Laboratory Compaction Characteristics of Soil Using Standard Effort (12,400 ft-lbf/ft^3 (600 kN-m/m^3).

H. Texas Accessibility Standards of Architectural Barriers Act, Article 9102, Texas Civil Statues.

1.04 SUBMITTALS

A. Conform to requirements of Section 01330 - Submittal Procedures.

B. Submit certified testing results and certificates of compliance.

PART 2 PRODUCTS

2.01 MATERIALS

A. Concrete: Conform to material and proportion requirements for concrete of Section 02751 - Concrete Paving.

B. Reinforcing Steel: Conform to material requirements of Section 02751 - Concrete Paving for reinforcing steel. Use No. 3 reinforcing bars.

C. Preformed Expansion Joint Material: Conform to material requirements for preformed expansion joint material of Section 02752 - Concrete Pavement Joints.

D. Expansion Joint Filler: Conform to material requirements for expansion joint material of Section 02752 - Concrete Pavement Joints.

E. Forms: Use straight, unwarped wood or metal forms with nominal depth equal to or greater than proposed sidewalk thickness. The use of 2 inch by 4 inch lumber as forms will not be allowed.

F. Sand Bed: Conform to material requirements for bank run sand of Section 02320 - Utility Backfill Materials.

G. Sodding: Conform to material requirements for sodding of Section 02922 - Sodding.

H. Coloring for wheelchair ramps: Conform to material requirements for colored concrete of Section 02761 - Colored Concrete for Medians and Sidewalks. Color shall be Brick Red or as shown on the drawings.

PART 3 EXECUTION

3.01 REPLACEMENT

A. Replace sidewalks and slope paving which are removed or damaged during construction with thickness and width equivalent to one removed or damaged, unless otherwise shown on Drawings. Finish surface (exposed aggregate, brick pavers, etc.) to match existing sidewalk.

B. Provide replaced and new sidewalks with wheelchair ramps when sidewalk intersects curb at street or driveway.

3.02 PREPARATION

A. Identify and protect utilities which are to remain.

B. Protect living trees, other plant growth, and features designated to remain.

C. Conduct clearing and grubbing operations in accordance with Section 02233 - Clearing and Grubbing.

D. Excavate subgrade 6 inches beyond outside lines of sidewalk. Shape to line, grade and cross section. For soils with plasticity index above 40 percent, stabilize soil with lime in accordance with Section 02336 – Lime-Stabilized Subgrade. Compact subgrade to minimum of 90 percent maximum dry density at optimum to 3 percent above optimum moisture content, as determined by ASTM D 698.

E. Immediately after subgrade is prepared, cover with compacted sand bed to depth as shown on Drawings. Lay concrete when sand is moist but not saturated.

3.03 PLACEMENT

A. Setting Forms: Straight, unwarped wood or metal forms with nominal depth equal to or greater than proposed sidewalk thickness. Use of 2 by 4's as forms will not be allowed. Securely stake forms to line and grade. Maintain position during concrete placement.

B. Reinforcement:

1. Install reinforcing bars.

2. Install reinforcing steel as shown on the drawings. Lay longitudinal bars in walk

continuously, except through expansion joints.

3. Use sufficient number of chairs to support reinforcement in manner to maintain reinforcement in center of slab vertically during placement.

4. Drill dowels into existing paving, sidewalk and driveways, secure with epoxy, and provide headers as required.

5. Use sufficient number of chairs for steel reinforcement bars to maintain position of bars within allowable tolerances. Place reinforcement as shown on Drawings. In plane of steel parallel to nearest surface of concrete, bars shall not vary from plan placement by more than 1/12 of spacing between bars. In plane of steel perpendicular to nearest surface of concrete, bars shall not vary from plan placement by more than 1/4 inch.

C. Expansion Joints: Install expansion joints with load transfer units in accordance with Section 02752 - Concrete Pavement Joints.

E. Place concrete in forms to specified depth and tamp thoroughly with "jitterbug" tamp, or other acceptable method. Bring mortar to surface.

F. Strike off to smooth finish with wood strike board. Finish smoothly with wood hand float. Brush across sidewalk lightly with fine-haired brush.

G. Apply coating to wheelchair ramp with contrasting color in accordance with Section 02761 - Colored Concrete for Medians and Sidewalks.

H. Unless otherwise indicated on Drawings, mark off sidewalk joints 1/8 inch deep, at spacing equal to width of walk. Use joint tool equal in width to edging tool.

I. Finish edges with tool having 1/4 inch radius.

J. After concrete has set sufficiently, refill space along sides of sidewalk to one-inch from top of walk with suitable material. Tamp until firm and solid, place sod as applicable. Dispose of excess material in accordance with Section 01576 - Waste Material Disposal. Repair driveways and parking lots damaged by sidewalk excavation in accordance with Section 02951 - Pavement Repair and Resurfacing.

3.04 CURING

A. Conform to requirements of Section 02753 - Concrete Pavement Curing.

3.05 FIELD QUALITY CONTROL

A. Testing will be performed under provisions of Section 01454 - Testing Laboratory Services.

B. Compressive Strength Test Specimens: Four test specimens for compressive strength test will be made in accordance with ASTM C 31 for each 30 cubic yards or less of sidewalk that is placed in one day. Two specimens will be tested at 7 days. Remaining two specimens will be tested at 28 days. Specimens will be tested in accordance with ASTM C 39. Minimum compressive strength: 2500 psi at 7 days and 3000 psi at 28 days.

C. Yield test for cement content per cubic yard of concrete will be made in accordance with ASTM C 138. When cement content is found to be less than that specified per cubic yard, reduce batch weights until amount of cement per cubic yard of concrete conforms to requirements.

D. If the Contractor places concrete without notifying the laboratory, the City will have the concrete tested by means of core test as specified in ASTM C 42. When concrete does not meet specification, cost of test will be deducted from payment.

E. Sampling of fresh concrete shall be in accordance with ASTM C 172.

F. Take slump tests when cylinders are made and when concrete slump appears excessive.

G. Concrete shall be acceptable when average of two 28 day compression tests is equal to or greater than minimum 28 day strength specified.

H. If either of two tests on field samples is less than average of two tests by more than 10 percent, that entire test shall be considered erratic and not indicative of concrete strength. Core samples will be required of in-place concrete in question.

I. If 28 day laboratory test indicates that concrete of low strength has been placed, test concrete in question by taking cores as directed by Project Manager. Take and test at least three representative cores as specified in ASTM C 42 and deduct cost from payment due.

3.06 NONCONFORMING CONCRETE

A. Remove and replace areas that fail compressive strength tests, with concrete of thickness shown on Drawings.

B. Replace nonconforming sections at no additional cost to City.

3.07 PROTECTION

A. Maintain newly place concrete in good condition until completion of Work.

B. Replace damaged areas.

END OF SECTION

THIS PAGE IS INTENTIONALLY LEFT BLANK.

Section 02911

TOPSOIL

PART 1 GENERAL

1.01 SECTION INCLUDES

A. Furnishing and placing topsoil for finish grading and for seeding, sodding, and planting.

1.02 MEASUREMENT AND PAYMENT

A. Unit Prices.

1. No separate payment will be made for topsoil under this Section. Include payment in Section 02921 - Hydro-mulch Seeding or Section 02922 - Sodding.

2. Refer to Section 01270 - Measurement and Payment for unit price procedures.

B. Stipulated Price (Lump Sum). If Contract is Stipulated Price Contract, payment for work in this Section is included in total Stipulated Price.

PART 2 PRODUCTS

2.01 TOPSOIL

A. Topsoil shall be fertile, friable, natural sandy loam surface soil obtained from excavation or borrow operations having following characteristics:

1. pH value of between 5.5 and 6.5

2. Liquid limit: 50 or less

3. Plasticity index: 20 or less

4. Gradation: maximum of 10 percent passing No. 200 sieve

B. Topsoil shall be reasonably free of subsoil, clay lumps, weeds, non-soil materials, and other litter or contamination. Topsoil shall not contain roots, stumps, and stones larger than 2 inches.

C. Obtain topsoil from naturally well-drained areas where topsoil occurs at minimum depth of 4 inches and has similar characteristics to that found at placement site. Do not obtain topsoil from areas infected with growth of, or reproductive parts of nut grass or other noxious weeds.

PART 3 EXECUTION

3.01 EXAMINATION

A. Excavate topsoil for esplanades and areas to receive grass or landscaping from areas to be further excavated. Stockpile in area approved by Project Manager.

B. Stockpile topsoil to depth not exceeding 8 feet. Cover to protect from erosion.

3.02 TOPSOIL EXCAVATION

A. Conform to excavation and stockpiling requirements of Section 02315 - Roadway Excavation.

3.03 PLACEMENT

A. Place no topsoil until subgrade has been approved. For areas to be seeded or sodded, scarify or plow existing material to minimum depth of 4 inches, or as indicated on Drawings. Remove vegetation and foreign inorganic material. Place 4 inches of topsoil on loosened material and roll lightly with appropriate lawn roller to consolidate topsoil.

B. Increase depth of topsoil to 6 inches when placed over sand bedding and backfill materials specified in Section 02320 - Utility Backfill Material.

C. For areas to receive shrubs or trees, excavate existing material and place topsoil to depth and dimensions shown on Drawings.

D. Remove spilled topsoil from curbs, gutters, and, paved areas and dispose of excess topsoil in accordance with requirements of Section 01576 - Waste Material Disposal.

E. Place topsoil to promote good drainage and compact with light roller. Water topsoil after placement until saturated for minimum depth 6 inches, fill in and recompact areas of settlement.

3.04 PROTECTION

A. Protect topsoil from wind and water erosion until planting is completed.

END OF SECTION

Section 02921

HYDRO MULCH SEEDING

PART 1 GENERAL

1.01 SECTION INCLUDES

A. Seeding, fertilizing, mulching, and maintenance of areas indicated on Drawings.

1.02 MEASUREMENT AND PAYMENT

A. Unit Prices.

1. Payment for hydro mulch seeding is on an acre basis, within limits of construction if shown on the drawings.

2. No payment will be made for hydro mulch seeding under this Section if limits of constructions are not shown on the drawings. Include payment in Section 01740 – Site Restoration.

3. Refer to Section 01270 - Measurement and Payment for unit price procedures.

B. Stipulated Price (Lump Sum). If Contract is Stipulated Price Contract, payment for work in this Section is included in total Stipulated Price.

1.03 SUBMITTALS

A. Conform to requirements of Section 01330 - Submittal Procedures.

B. Submit certification from supplier that each type of seed conforms to these specifications and requirements of Texas Seed Law. Certification shall accompany seed delivery.

C. Submit certificate stating that fertilizer complies with these specifications and requirements of Texas Fertilizer Law.

PART 2 PRODUCTS

2.01 MATERIALS

A. Topsoil: Conform to material requirements of Section 02911 - Topsoil.

B. Seed: Conform to U.S. Department of Agriculture rules and regulations of Federal Seed Act and Texas Seed Law. Seed shall be certified 90 percent pure and furnish 80 percent germination and meet following requirements:

1. Rye: Fresh, clean, Italian rye grass seed (lollium multi-florum), mixed in labeled proportions. As tested, minimum percentages of impurities and germination must be labeled. Deliver in original unopened containers.

2. Bermuda: Extra-fancy, treated, lawn type common bermuda (Cynodon dactylon). Deliver in original, unopened container showing weight, analysis, name of vendor, and germination test results.

3. Wet, moldy, or otherwise damaged seed will not be accepted.

4. Seed requirements, application rates, and planting dates are:

TYPE	APPLICATION RATE POUNDS/A	PLANTING DATE
Hulled Common Bermuda Grass 98/88 Unhulled Common Bermuda Grass 98/88	40 40	Jan 1 to Mar 31
Hulled Common Bermuda Grass 98/88	40	Apr 1 to Sep 30
Hulled Common Bermuda Grass 98/88 Unhulled Common Bermuda Grass 98/88 Annual Rye Grass (Gulf)	40 40 30	Oct 1 to Dec 31

C. Fertilizer: Dry and free flowing, inorganic, water soluble commercial fertilizer, which is uniform in composition. Deliver in unopened containers which bear manufacturers guaranteed analysis. Caked, damaged, or otherwise unsuitable fertilizer will not be accepted. Fertilizer shall contain minimum percentages of following elements:

1. Nitrogen: 10 Percent

2. Phosphoric Acid: 20 Percent

3. Potash: 10 Percent

D. Mulch:

1. Virgin wood cellulose fibers from whole wood chips having minimum of 20 percent fibers 0.42 inches in length and 0.01 inches in diameter.

2. Cellulose fibers manufactured from recycled newspaper and meeting same fiber content and size as for cellulose fibers from wood chips.

3. Dye mulch green for coverage verification purposes.

E. Soil Stabilizer: "Terra Tack 1" or approved equal.

F. Weed control agent: Pre-emergent herbicide for grass areas, such as "Benefin," or approved equal.

PART 3 EXECUTION

3.01 PREPARATION

A. Place and compact topsoil in accordance with requirements of Section 02911 - Topsoil.

B. Dispose of Objectionable and Waste Materials in accordance with Section 01576 - Waste Material Disposal.

3.02 APPLICATION

A. Seed: Apply uniformly at rates given in Paragraph 2.01 B for type of seed and planting date.

B. Fertilizer: Apply uniformly at rate of 500 pounds per acre.

C. Mulch: Apply uniformly at rate of 50 pounds per 1000 square feet.

D. Soil Stabilizer: Apply uniformly at rate of 40 pounds per acre.

E. Weed Control Agent: Apply at manufacturer's recommended rate prior to hydro mulching.

F. Sod: Lay single row of sod along perimeter where top soil and pavement intersect. Apply in conformance to Section 02922 - Sodding.

G. Suspend operations under conditions of drought, excessive moisture, high winds, or extreme or prolonged cold. Obtain Project Manager approval before resuming operations.

3.03 MAINTENANCE

A. Maintain grassed areas minimum of 90 days, or as required to establish an acceptable lawn. For areas seeded in fall, continue maintenance following spring until acceptable lawn is established.

B. Maintain grassed areas by watering, fertilizing, weeding, and trimming.

C. Repair areas damaged by erosion by regrading, rolling and replanting.

D. Reseed small, sparse grass areas. When sparse areas exceed 20 percent of planted area, reseed by hydro mulch.

E. Mow grass when height reaches 3 1/2 inches or greater on average before final acceptance. Mow to height of 2 1/2 inches.

END OF SECTION

Section 02922

SODDING

PART 1 GENERAL

1.01 SECTION INCLUDES

A. Restoration of existing lawn areas disturbed by construction shall be by installation of new sod.

B. Planting of sod within areas designated on Drawings for purpose of surface stabilization, channel stabilization or vegetation buffer strips.

C. Sod is defined as blocks, squares, strips of turfgrass, and adhering soil used for vegetative planting. To be placed edge to edge for complete coverage.

D. Lawn is defined as ground covered with fine textured grass kept neatly mowed.

1.02 MEASUREMENT AND PAYMENT

A. Unit Prices.

1. Payment for sodding is on square yard basis.

2. For utility construction, no separate payment will be made for sodding. Include payment in section 01740 under site restoration.

3. Refer to Section 01270 - Measurement and Payment for unit price procedures.

B. Stipulated Price (Lump Sum). If Contract is Stipulated Price Contract, payment for work in this Section is included in total Stipulated Price.

1.03 SUBMITTALS

A. Conform to requirements of Section 01330 - Submittal Procedures.

1.04 QUALITY ASSURANCE

A. Sod only when weather and soil conditions are deemed by Project Manager to be suitable for proper placement.

B Water and fertilize new sod.

C. Guarantee sod to be growing 30 days after substantial completion.

D. Maintenance Period:

1. Begin maintenance immediately after each section of grass sod is installed and continue for 30 day period from date of substantial completion.

2. Resod unacceptable areas.

3. Water, fertilize, control disease and insect pests, mow, edge, replace unacceptable materials, and perform other procedures consistent with good horticultural practice to ensure normal, vigorous and healthy growth. Install disease control within guidelines set forth by Structural Pest Control Board of the State of Texas.

E. Notify Project Manager 10 days before end of maintenance period for inspection.

PART 2 PRODUCTS

2.01 SOD

A. Species: Bermuda (Cynodon Dactylon), Buffalo (Buchloe Dactyloides), or St. Augustine (Stenotaphrum Secundatum) Gulf Coast variety to match existing sod.

B. Contents: 95 percent permanent grass suitable to climate in which it is to be placed; not more than 5 percent weeds and undesirable grasses; good texture, free from obnoxious grasses, roots, stones and foreign materials.

C. Size: 12 inch wide strips, uniformly 2 inches thick with clean-cut edges.

D. Sod is to be supplied and maintained in healthy condition as evidenced by grass being normal green color.

2.02 FERTILIZER

A. Available nutrient percentage by weight: 12 percent nitrogen, 4 percent phosphoric acid, and 8 percent potash; or 15 percent nitrogen, 5 percent phosphoric acid, and 10 percent potash.

2.03 WEED AND INSECT TREATMENT

A. Provide acceptable treatment to protect sod from weed and insect infestation. Submit treatment method to Project Manager for approval. Install insect and disease control within guidelines set forth by Structural Pest Control Board of the State of Texas.

2.04 WATER

A. Potable, available on-site through Contractor's water trucks. Contractor may use City of Houston hydrants when water use is measured through Contractor's meter. Do not use private resident's water.

2.05 BANK SAND

A. Free of clay lumps, roots, grass, salt or other foreign material.

PART 3 EXECUTION

3.01 PREPARATION

A. Verify that soil placement and compaction have been satisfactorily completed. Verify that soil is within allowable range of moisture content.

B. Top soil shall be free of weeds and foreign material immediately before sodding.

C. Do not start work until conditions are satisfactory. Do not start work during inclement or impending inclement weather.

D. Rake areas to be sodded smooth, free from unsightly variations, bumps, ridges or depressions.

E. Spread 2 inch layer of bank sand over areas to be sodded prior to planting of sod.

F. Apply fertilizer at rate of 25 pounds per 1000 square feet. Apply after raking soil surface and not more than 48 hours prior to laying sod. Mix thoroughly into upper 2 inches of soil. Lightly water to aid in dissipation of fertilizer.

3.02 APPLICATION

A. Full Sodding: Lay sod with closely fitted joints leaving no voids and with ends of sod strips staggered. Lay sod within 24 hours of harvesting.

B. On slopes 2:1 and steeper, lay sod perpendicular to slope and secure every row with wooden pegs at maximum 2 feet on center. Drive pegs flush with soil portion of sod.

C. Prior to placing sod, on slopes 3:1 or where indicated, place Hold/Gro or Roll Lite or equal over topsoil. Securely anchor in place with posts sunk firmly into ground at maximum 16 feet on center along pitch of slope and equal to width of wire mesh horizontally across slopes.

D. After sod is laid, irrigate thoroughly to secure 6-inch minimum penetration into soil below sod.

E. Tamp and roll sod with approved equipment to eliminate minor irregularities and to form close contact with soil bed immediately after planting and watering. Submit type of tamping and rolling equipment to be used to Project Manager for approval, prior to construction.

3.03 MAINTENANCE

A. Watering:

1. Water lawn areas once a day with minimum 1/2 inch water for first 3 weeks after area is sodded.

2. After 3 week period, water twice a week with 3/4 inch of water each time unless comparable amount has been provided by rain.

3. Make weekly inspections to determine moisture content of soil unless soil is in frozen condition.

4. Water in afternoon or at night to enable soil to absorb maximum amount of water with minimum evaporation.

B. Mowing:

1. Mow sod at intervals which will keep grass height from exceeding 3 1/2 inches.

2. Set mower blades at 2 1/2 inches.

3. Do not remove more than one-half of grass leaf surface.

4. Mow sodded areas requiring mowing within 1 month after installation with light-weight rotary type mower. Mow sod only when dry and not in saturated or soft condition.

5. Remove grass clippings during or immediately after mowing.

C. Fertilizer and Pest Control:

1. Evenly spread fertilizer composite at rate of 40 pounds per 5000 square feet or as recommended by manufacturer. Do not place fertilizer until 2 weeks after placement of sod.

2. Restore bare or thin areas by topdressing with mix of 50 percent sharp sand and 50 percent sphagnum peat moss.

3. Apply mixture 1/4 to 1/2 inch thick.

4. Treat areas of heavy weed and insect infestation as recommended by treatment manufacturer.

D. Restrict all traffic from sodded areas until sod is established or for minimum 10 days during growing season. Use wood lath and plastic tape to cordon sodded areas. Maintain tape and lath throughout for minimum 30 days during growing season.

3.04 CLEANUP

A. During course of planting, remove excess and waste materials; keep lawn areas clean and take precautions to avoid damage to existing structures, plants, grass, and streets.

B. Remove barriers, signs, and other Contractor material and equipment from project site at termination of establishment period.

C. Dispose of unused materials and rubbish in accordance with Section 01576 - Waste Material Disposal.

END OF SECTION

THIS PAGE IS INTENTIONALLY LEFT BLANK.

Item 416
Drilled Shaft Foundations

1. DESCRIPTION

Construct foundations consisting of reinforced or non-reinforced concrete drilled shafts.

2. MATERIALS

Use materials that meet the requirements of the following Items.

- Item 421, "Hydraulic Cement Concrete,"
- Item 440, "Reinforcement for Concrete," and
- Item 448, "Structural Field Welding."

Use concrete for drilled shafts that meets the requirements of Table 1 unless otherwise shown on the plans.

Table 1
Concrete for Drilled Shafts

Drilled Shaft Type	Concrete
Non-reinforced	Class A
Reinforced	Class C
Slurry and underwater concrete placement	Class SS

Use coarse aggregate Grade 4, 5, or 6 for drilled shaft concrete in reinforced drilled shafts. Grade 2 or 3 may be used if the shaft is dry and reinforcing steel has a 5 in. minimum clear spacing.

Use a water-reducing, retarding admixture in accordance with DMS-4640, "Chemical Admixtures for Concrete," in all concrete when using casing that will be pulled or when placing shafts underwater or under slurry.

Use concrete with slump that meets the requirements of Table 2 as determined by Tex-415-A.

Table 2
Slump Requirements

Placement Type	Minimum Acceptable Placement Slump, in.	Recommended Design and Placement Slump, in.	Maximum Acceptable Placement Slump, in.
Dry	5-1/2	6-1/2	7-1/2
Underwater and under slurry	7	8	9

Perform a slump loss test in accordance with Tex-430-A before beginning work when casing is to be pulled or concrete is to be placed underwater or under slurry. Provide concrete that will maintain a slump of at least 4 in. throughout the entire anticipated time of concrete placement. Time of concrete placement is described in Section 416.3.6., "Concrete," and Section 416.3.7., "Additional Requirements for Slurry Displacement or Underwater Concrete Placement Methods." Note the temperature of the concrete mix at the beginning of the slump loss test. Place the concrete if its temperature at the time of placement into the drilled shaft is no more than 10°F higher than the slump loss test temperature. Use ice or other concrete cooling ingredients to lower concrete temperature, or run additional slump loss tests at the higher temperatures. Slump loss testing will be waived if anticipated time of concrete placement is less than 90 minutes.

Use mineral drilling slurry that meets the requirements of Table 3, as determined by Tex-130-E. Determine pH of slurry by Tex-128-E or pH paper strips.

Table 3
Mineral Slurry Requirements

Before Introduction into the Excavation			Sampled from the Bottom of the Excavation before Concreting		
Specific Gravity	Sand Content	pH	Specific Gravity	Viscosity (sec.)	Sand Content
≤ 1.10	≤ 1%	8–11	≤ 1.15	≤ 45	≤ 4%

Use mineral slurry consisting of processed bentonite or attapulgite clays mixed with clean fresh water. Do not use partially hydrolyzed polyacrylamide (PHPA) polymeric slurry or any blended mineral-polymer slurry.

If approved, water may be used as the drilling fluid. In this case, all of the provisions of Table 3 must be met except that the maximum specific gravity is not to exceed 1.12.

Sample slurry from the bottom of the hole, before placing concrete, and test it in accordance with Tex-130-E. Use a pump or air lift to remove slurry that does not meet the requirements of Table 3 while adding fresh clean slurry to the top of the hole to maintain the slurry level. Continue this operation until the slurry sampled from the bottom of the hole meets the requirements.

3. CONSTRUCTION

Submit Drilled Shaft installation plan for review no later than one month before drilled shaft construction. Include the following in the plan:

- Name and experience record of the drilled shaft superintendent who will be in charge of drilled shaft operations for this project.
- List of proposed equipment to be used, including cranes, drills, augers, bailing buckets, final cleaning equipment, desanding equipment, slurry pumps, core sampling equipment, tremies or concrete pumps, casing, etc.
- Details of overall construction operation sequence and the sequence of shaft construction in bents or groups.
- Details of shaft excavation methods.
- When the use of slurry is anticipated, details of the slurry mix design and its suitability for the subsurface conditions at the construction site, mixing and storage methods, maintenance methods and disposal procedures.
- Details of methods to clean the shaft excavation.
- Details of reinforcement placement, including support and centralization methods.
- Details of concrete placement, including proposed operational procedures for free fall, tremie or pumping methods.
- Details of casing installation and removal methods.

The installation plan will be reviewed for conformance with the plans, specifications and special provisions. The Contractor will be notified within 14 days of receipt of the installation plan of any additional information required and/or changes necessary to meet the contract requirements. All procedural approvals given will be subject to trial in the field and will not relieve the Contractor of the responsibility to satisfactorily complete the work as detailed in the plans and specifications.

Place the shaft to within the following tolerances:

- Vertical plumbness—1 in. per 10 feet of depth.
- Center of shaft located under column—1 in. of horizontal plan position.
- Center of shaft located under footing—3 in. of horizontal plan position.

Complete the embankment at bridge ends before installing drilled shafts that pass through the fill. Refer to Item 423, "Retaining Walls," for provisions for drilled shafts passing through the structural volume of retaining walls.

3.1. **Excavation**. The plans indicate the expected depths and elevations for encountering satisfactory bearing material. Excavate as required for the shafts through all materials encountered to the dimensions and elevations shown on the plans or required by the site conditions. Removal of man-made obstructions not shown on the plans will be paid for in accordance with Article 9.7., "Payment for Extra Work and Force Account Method." Adjust the bottom of the shaft or alter the foundation if satisfactory founding material is not encountered at plan elevation, as approved to satisfactorily comply with design requirements. Blasting is not allowed for excavations.

Stop drilling if caving conditions are encountered, and adopt a construction method that stabilizes the shaft walls.

Do not excavate a shaft within 2 shaft diameters (clear) of an open shaft excavation, or one in which concrete has been placed in the preceding 24 hr.

Dispose of material excavated from shafts and not incorporated into the finished project in accordance with the plans and with federal, state, and local laws.

Provide suitable access, lighting, and equipment for proper inspection of the completed excavation and checking the dimensions and alignment of shafts excavation.

3.2. **Core Holes**. Take cores to determine the character of the supporting materials if directed. Use a method that will result in recovery of an intact sample adequate for judging the character of the founding material. Such cores should be at least 5 ft. deeper than the proposed founding grade or a depth equal to the diameter of the shaft, whichever is greater. Take these cores when the excavation is complete.

3.3. **Casing**. Use casing when necessary to prevent caving of the material, to exclude ground water, when slurry is used for hole stabilization, or when required as part of the Contractor's Safety Plan. Provide casing with an outside diameter not less than the specified diameter of the shaft. The portion of shaft below the casing may be as much as 2 in. smaller than the specified shaft diameter. No extra compensation will be made for concrete required to fill an oversized casing or oversized excavation. Use casing strong enough to withstand handling stresses and pressures of concrete and of the surrounding earth or water, and that is watertight, smooth, clean, and free of accumulations of hardened concrete.

Use construction methods that result in a minimal amount of disturbed soil being trapped outside the casing. This does not apply to temporary undersized casings used to protect workers inside shafts or to drilled shafts designed for point bearing only.

Leave casing in place only if authorized or shown on the plans. Extract casing only after placing the concrete to an appropriate level. Maintain sufficient concrete in the casing at all times to counteract soil and water pressure. Rotate or move the casing up or down a few inches if necessary before and during concrete placement to facilitate extraction of the casing.

3.4. **Requirements for Slurry Displacement Method**. When soil conditions warrant, use the slurry displacement method to construct drilled shafts unless otherwise shown on the plans. Use this method to support the sides of the excavation with processed mineral slurry that is then displaced by concrete to form a continuous concrete shaft.

Install surface casing to a minimum of 10 ft. below existing ground before introducing slurry. Do not use casing other than surface casing. Do not use surface casing longer than 20 ft. without approval. Do not extract the surface casing until after placing the concrete.

Pre-mix slurry in a reservoir with enough capacity to fill the excavation and for recovery of the slurry during concrete placement. Do not mix slurry in the shaft excavation or other hole. Allow adequate time for hydration of the slurry before introduction into the excavation.

Maintain a head of slurry in the shaft excavation at or near ground level or higher, as necessary, to counteract ground water pressure during and after drilling.

Use an air lift or proper size cleanout bucket, just before placing reinforcing steel, to remove any material that may have fallen from the sides of the excavation or accumulated on the bottom after the completion of drilling. Use a cleanout bucket if material is too large to be picked up with an air lift.

Re-process the hole with the auger as directed if concrete placement is not started within 4 hr. of the completion of the shaft excavation. Then clean the bottom with an air lift or cleanout bucket, and check the slurry at the bottom of the hole for compliance with the slurry requirements of Article 416.2., "Materials."

Agitate the congealed slurry to liquefaction if the slurry forms a gel before concrete placement, and whenever directed.

Recover and dispose of all slurry as approved, and in accordance with all federal, state, and local laws. Do not discharge slurry into or in close proximity to streams or other bodies of water.

3.5. **Reinforcing Steel**. Completely assemble the cage of reinforcing steel, and place it as a unit immediately before concrete placement. The cage consists of longitudinal bars and lateral reinforcement (spiral reinforcement, lateral ties, or horizontal bands). Connect individual segments with couplers or by lapping steel as approved if overhead obstacles prevent placement of the cage as a single unit.

Extend the reinforcing steel cage as follows if the shaft is lengthened beyond plan length unless directed otherwise.

- Extend the cage to the bottom for shafts supporting structures other than bridges.
- Extend the cage to 25 ft. or to the bottom, whichever is shorter, for bridge shafts with plan lengths less than 25 ft.
- Do not extend the cage for bridge shafts with plan lengths at least 25 ft. that are lengthened less than 33% of plan length.
- Extend the cage as directed for bridge shafts with plan lengths at least 25 ft. that are lengthened more than 33% of plan length.

If the cage does not reach the bottom of the shaft, it may be suspended, or a portion of the longitudinal steel may be extended to support the cage on the bottom of the shaft. Bars used to extend or support the cage may be lap spliced or welded by a qualified welder. Place the extension at the bottom of the shaft.

Tie spiral reinforcement to the longitudinal bars at a spacing no more than 24 in., or as required for a stable cage. Ensure lateral reinforcement is not welded to longitudinal bars unless otherwise shown on the plans.

Center the reinforcing steel cage in the excavation using approved "roller" type centering devices unless otherwise approved. Use concrete or plastic chairs to keep the reinforcing cage off of the bottom of the hole. Use centering devices starting at 1.5 ft. off from the bottom of the cage and spaced vertically at intervals not exceeding 10 ft. Use a minimum of 3 centering devices per level at a spacing not to exceed 30 in. Flat or crescent-shaped centralizers ("sleds") are not allowed.

Support or hold down the cage to control vertical displacement during concrete placement or extraction of the casing. Use support that is concentric with the cage to prevent racking and distortion of the steel.

Check the elevation of the top of the steel cage before and after concrete placement or after casing extraction when casing is used. Downward movement of the steel up to 6 in. per 20 feet of shaft length and upward movement of the steel up to 6 in. total are acceptable.

Maintain the minimum length of steel required for lap with column steel. Use dowel bars if the proper lap length is provided both into the shaft and into the column. Locate and tie all dowel bars into the cage before placing concrete or insert dowel bars into fresh, workable concrete.

Locate and tie anchor bolts when required before placement of concrete. Use templates or other devices to assure accurate placement of anchor bolts.

3.6. **Concrete**. Perform all work in accordance with Item 420, "Concrete Substructures." Provide concrete with maximum placement temperatures as specified in Table 4. Provide thermal analysis to show and temperature recording devices to verify maximum core temperature requirements are met as specified in Section 420.4.7.14., "Mass Placements," as directed.

Table 4
Maximum Concrete Placing Temperature

Shaft Size	Mix Design Options 1–5	Mix Design Options 6–8
Diameter < 5 ft.	95°F	95°F
5 ft.≤ Diameter ≤ 7 ft.	95°F	85°F
7 ft. < Diameter	85°F	75°F

Form portions of drilled shaft that project above natural ground.

Remove loose material and accumulated seep water from the bottom of the excavation before placing concrete. Place concrete using underwater placement methods if water cannot be removed.

Place concrete as soon as possible after all excavation is complete and reinforcing steel is placed. Provide workable concrete that does not require vibrating or rodding. Vibrate formed portions of drilled shafts.

Place concrete continuously for the entire length of the shaft. Limit free fall of concrete to 25 ft. for dry shafts of 24 in. or smaller diameter. Use a suitable tube or tremie to prevent segregation of materials. Use a tube or tremie in sections to provide proper discharge and permit raising as the placement progresses. For dry shafts over 24 in. diameter, concrete can be allowed to free fall an unlimited distance if it does not strike the reinforcing cage or sides of the hole during placement. Provide a hopper with a minimum 3-ft.long drop-tube at the top of the shaft to direct concrete vertically down the center of the shaft when free fall is used. Do not use a shovel or other means to simply deflect the concrete discharge from the truck.

Maintain a sufficient head of concrete for cased shafts at all times above the bottom of the casing to overcome hydrostatic pressure. Extract casing at a slow, uniform rate with the pull in line with the axis of the shaft. Monitor the concrete level in the casing during extraction. Stop the extraction and add concrete to the casing as required to ensure a completely full hole upon casing removal. The elapsed time from the mixing of the first concrete placed into the cased portion of the shaft until the completion of extraction of the casing must not exceed the time for which the concrete maintains a slump of over 4 in. in accordance with Article 416.2., "Materials." Modify the concrete mix, the construction procedures, or both for subsequent shafts if the elapsed time is exceeded.

Cure the top surface and treat any construction joint area in accordance with Item 420, "Concrete Substructures."

3.7. **Additional Requirements for Slurry Displacement or Underwater Concrete Placement Methods**. Place concrete on the same day the shaft is excavated and as soon as possible after all excavation is complete and reinforcing steel is placed. Use an air lift or cleanout bucket of the proper size to clean the bottom of the excavation before placing the reinforcing steel cage and concrete. Place concrete through a closed tremie or pump it to the bottom of the excavation. The minimum tremie diameter will be at least 6 times the maximum size of aggregate used in the concrete mix but not less than 10 in. Initially seal the tremie or pump line to positively separate the concrete from the slurry or water. Place concrete continuously from the beginning of placement until the shaft is completed. Keep the tremie full of concrete and well submerged in the previously placed concrete at all times if using a tremie. Raise the tremie as necessary to maintain the free flow of concrete and the stability of any casing used. Keep the discharge tube submerged in the previously placed concrete at all times if using a pump. Place additional concrete to ensure the removal of any contaminated concrete at the top of the shaft. Allow the top portion of concrete to flush completely from the hole at the completion of the pour until there is no evidence of slurry or water contamination. Do not attempt to remove this concrete with shovels, pumps, or other means. Level the top of shaft with hand tools as necessary.

Use a sump or other approved method to channel displaced fluid and concrete away from the shaft excavation. Recover slurry and dispose of it as approved. Do not discharge displaced fluids into or near

streams or other bodies of water. Provide a collar or other means of capturing slurry and the top portion of concrete flushed from the shaft for pours over water.

Remove the tube, reseal it at the bottom, penetrate with the tube into the concrete already placed by at least 5 ft., and recharge it before continuing if concrete placement is interrupted due to withdrawal of the submerged end of the tremie or pump discharge tube before completion. If this condition exists, notify the Engineer and note the elevation and circumstances related to the loss of seal on the drilled shaft log.

The elapsed time from the mixing of the first concrete placed until the completion of concrete placement, including extraction of the casing, must not exceed the time for which the concrete maintains a slump of over 4 in. in accordance with Article 416.2., "Materials." Modify the concrete mix, the construction procedures, or both for subsequent shafts if the elapsed time is exceeded.

3.8. **Test Load.** Load test shafts, if required, in accordance with Item 405, "Foundation Load Test."

3.9. **Trial Shaft.** When required on the plans, construct trial shafts to the depth and diameter specified on the plans. Trial shafts include: drilling the hole, placement of the rebar cage (unless otherwise stated), and placement of the concrete. When trial shafts are required, delay start of production shafts until successful completion of trial shafts.

4. MEASUREMENT

4.1. **Drilled Shaft.** Drilled shaft foundations will be measured by the foot to the bottom of the shaft.

4.1.1. **Interior Bents and Piers.** Shafts will be measured from a point approximately 6 in. below the finished earthwork elevation at the center of each shaft, unless specific elevations or dimensions are indicated on the plans or unless otherwise directed to meet unusual conditions. The bent height shown on the plans is for estimating purposes only and does not control the top-of-shaft measurement.

4.1.2. **Abutment Bents and Retaining Walls.** Shafts will be measured from the bottom of footing or cap elevation.

4.1.3. **Other Non-Bridge Structures.** Shafts, including trial shafts, will be measured from the top of the shaft.

4.2. **Core Hole.** Core holes will be measured by each core hole drilled.

5. PAYMENT

The unit prices bid for the various classifications of drilled shafts will be full compensation for excavation; furnishing, placing, and removing casing; furnishing, processing, and recovering slurry; furnishing, and placing reinforcing steel; pumping; furnishing and placing concrete, including additional concrete required to fill an oversize casing or oversize excavation; conducting slump loss tests; backfilling; disposing of cuttings and slurry; and materials, tools, equipment, labor, and incidentals.

When the bottom of a drilled shaft is placed at an elevation below plan grade, no direct payment will be made for extra reinforcement placed to support the cage. The extra reinforcement will be considered subsidiary to the price bid per foot of shaft. No extra payment will be made for casings left in place.

No payment will be made for "Drilled Shaft" until the concrete has been placed.

5.1. **Drilled Shaft.** The work performed and materials furnished in accordance with this Item and measured as provided under "Measurement" will be paid for at the unit price bid for "Drilled Shaft," "Drilled Shaft (Non-reinforced)," "Drilled Shaft (Sign Mounts)," "Drilled Shaft (High Mast Pole)," "Drilled Shaft (Roadway Illumination Pole)," or "Drilled Shaft (Traffic Signal Pole)" of the specified diameter, subject to the limitations for overruns authorized by the Engineer given in Section 416.5.1.1., "Overrun."

5.1.1. **Overrun**. Payment for individual completed shaft lengths up to and including 5 ft. in excess of the maximum plan length shaft, as defined in Section 416.5.1.2., "Maximum Plan Length Shaft," will be made at the unit price bid per foot of the specified diameter.

Payment for the portion of individual completed shaft length in excess of 5 ft. and up to and including 15 ft. more than the maximum plan length shaft, as defined in this Item, will be made at a unit price equal to 115% of the unit price bid per foot of the specified diameter.

Payment for the portion of individual completed shaft length in excess of 15 ft. more than the maximum plan length shaft, as defined in Section 416.5.1.2., "Maximum Plan Length Shaft," will be made at a unit price equal to 125% of the unit price bid per foot of the specified diameter.

5.1.2. **Maximum Plan Length Shaft**. Payment described above is subject to the following provisions for extra depth drilling:

- For bridge structures, the maximum plan length shaft is the maximum length shaft, regardless of diameter, for any drilled shaft on that specific bridge.
- For retaining walls, the maximum plan length shaft is the maximum length shaft, regardless of diameter, for any drilled shaft on that specific retaining wall.
- For overhead sign structures, the maximum plan length shaft is the maximum length shaft, regardless of diameter, for any overhead sign structures included in the Contract.
- For high mast illumination poles, the maximum plan length shaft is the maximum length shaft, regardless of diameter, for any high mast illumination pole included in the Contract.
- For roadway illumination poles, the maximum plan length shaft is the maximum length shaft, regardless of diameter, for any roadway illumination pole included in the Contract.
- For traffic signal poles, the maximum plan length shaft is the maximum length shaft, regardless of diameter, for any traffic signal pole included in the Contract.

5.2. **Core Hole**. Core holes will be paid at $200 each.

Item 420
Concrete Substructures

1. DESCRIPTION

Construct concrete substructures including footings, columns, caps, abutments, piers, culverts, other bridge substructure elements, and other concrete structures as indicated.

2. MATERIALS

2.1. **Concrete.** Provide concrete in accordance with Item 421, "Hydraulic Cement Concrete." Provide the class of concrete for each type of structure or unit as shown on the plans or in pertinent governing specifications.

2.2. **Grout or Mortar.** Provide grout for dowelling anchors or precast connections in accordance with DMS-4675, "Cementitious Grouts and Mortars for Miscellaneous Applications."

2.3. **Latex Curing Materials.** Provide an acrylic-polymer latex admixture (acrylic resin emulsion per DMS-4640, "Chemical Admixtures for Concrete") suitable for producing polymer-modified concrete or mortar. Do not allow latex to freeze.

2.4. **Reinforcing Steel.** Provide reinforcing steel in accordance with Item 440, "Reinforcement for Concrete."

2.5. **Expansion Joint Material.** Provide materials in accordance with DMS-6310, "Joint Sealants and Fillers."

- Provide preformed fiber expansion joint material that conforms to the dimensions shown on the plans.
- Provide preformed bituminous fiber material unless otherwise specified.
- Provide asphalt board that conforms to dimensions shown on the plans.
- Provide re-bonded neoprene filler that conforms to the dimensions shown on the plans.

2.6. **Waterstop.** Provide rubber or polyvinyl chloride (PVC) waterstops in accordance with DMS-6160, "Water Stops, Nylon Reinforced Neoprene Sheet, and Elastomeric Pads," unless otherwise shown on the plans.

2.7. **Curing Materials.** Provide membrane curing compounds in accordance with DMS-4650, "Hydraulic Cement Concrete Curing Materials and Evaporation Retardants."

Provide cotton mats that consist of a filling material of cotton "bat" or "bats" (at least 12 oz. per square yard) completely covered with unsized cloth (at least 6 oz. per square yard) stitched longitudinally with continuous parallel rows of stitching spaced at less than 4 in., or tuft both longitudinally and transversely at intervals less than 3 in. Provide cotton mats that are free from tears and in good general condition. Provide a flap at least 6 in. wide consisting of 2 thicknesses of the covering and extending along 1 side of the mat.

Provide polyethylene sheeting that is at least 4 mils thick and free from visible defects. Provide only clear or opaque white sheeting when the ambient temperature during curing exceeds 90°F or when applicable to control temperature during mass pours.

Provide burlap-polyethylene mats made from burlap impregnated on 1 side with a film of opaque white pigmented polyethylene, free from visible defects. Provide laminated mats that have at least 1 layer of an impervious material such as polyethylene, vinyl plastic, or other acceptable material (either as a solid sheet or impregnated into another fabric) and are free of visible defects.

Provide burlap material which complies with AASHTO M 182, Class 3 (10 oz. per square yard) with the following additions:

- Manila hemp may also be used to make burlap.
- Do not use burlap fabricated from bags,
- Do not use burlap containing any water soluble ingredient which will retard the setting time of concrete.

Provide used burlap complying with the requirements stated above and that has only been used previously for curing concrete. "Like new" cleanliness is not expected, but contamination with any substance foreign to the concrete curing process, such as grease or oil, will be cause for rejection.

2.8. **Epoxy.** Provide epoxy materials in accordance with DMS-6100, "Epoxies and Adhesives," unless otherwise specified.

3. EQUIPMENT

3.1. **Transporting and Placing Equipment.** Use appropriate transporting and placing equipment such as buckets, chutes, buggies, belt conveyors, pumps, or other equipment as necessary. Ensure concrete is not transported or conveyed through equipment made of aluminum.

Use tremies to control the fall of concrete or for underwater placement. Use tremies that are watertight and of large enough diameter to allow the placement of the concrete but less than 14 in. in diameter. Construct the tremie so the bottom can be sealed and opened once the tremie has been fully charged with concrete for underwater placements.

Use pumps with lines at least 5 in. inside diameter (I.D.) where Grade 2 or smaller coarse aggregate is used, and at least 8 in. I.D. for Grade 1 coarse aggregate.

3.2. **Vibrators.** Use immersion-type vibrators for consolidation of concrete. Provide at least 1 standby vibrator for emergency use. Furnish vibrator head covered by a rubberized or elastomeric cover when used near epoxy coated reinforcing steel.

3.3. **Temperature Recording Equipment.** Use strip chart temperature recording devices, recording maturity meters in accordance with Tex-426-A, or other approved devices that are accurate to within ±2°F within the range of 32°F to 212°F for mass concrete operations, cold weather placements, and as otherwise specified.

3.4. **Artificial Heating Equipment.** Use artificial heating equipment as necessary for maintaining the concrete temperatures as specified in Section 420.4.7.11., "Placing Concrete in Cold Weather."

3.5. **Spraying Equipment.** Use mechanically powered pressure sprayers, either air or airless, with appropriate atomizing nozzles for the application of membrane curing. Use hand-pressurized spray equipment with 2 or 3 fan-spray nozzles if approved. Ensure the spray from each nozzle overlaps the spray from adjacent nozzles by approximately 50%.

3.6. **Concrete Testing Equipment.** Provide testing equipment for use by the Engineer in accordance with Section 421.3.3., "Testing Equipment."

4. CONSTRUCTION

Obtain approval for proposed construction methods before starting work. Approval of construction methods and equipment does not relieve the Contractor's responsibility for safety or correctness of methods, adequacy of equipment, or completion of work in full accordance with the Contract.

Unless otherwise shown on the plans, it is the Contractor's option to perform testing on structural concrete (structural classes of concrete are identified in Table 8 of Section 421.4.1., "Classification of Concrete Mix Designs,") to determine the in-situ strength to address the schedule restrictions in Section 420.4.1., "Schedule Restrictions." The Engineer may require the Contractor to perform this testing for concrete placed in cold weather. Make enough test specimens for Contractor-performed testing to ensure strength

requirements are met for the operations listed in Section 420.4.1., "Schedule Restrictions." Make at least 1 set of test specimens for each element cast each day. Cure these specimens under the same conditions as the portion of the structure involved for all stages of construction. Ensure safe handling, curing, and storage of all test specimens. Provide testing personnel, and sample and test the hardened concrete in accordance with Section 421.4.8., "Sampling and Testing of Concrete." The maturity method, Tex-426-A, may be used for in-situ strength determination for schedule restrictions if approved. Coring will not be allowed for in-situ strength determination for schedule restrictions. Provide the Engineer the opportunity to witness all testing operations. Report all test results to the Engineer.

If the Contractor does not wish to perform schedule restriction testing, the Engineer's 7-day lab-cured tests, performed in accordance with Article 421.5., "Acceptance of Concrete," will be used for schedule restriction determinations. The Engineer may require additional time for strength gain to account for field curing conditions such as cold weather.

4.1. **Schedule Restrictions.** Construct and open completed structures to traffic with the following limitations unless otherwise shown on the plans:

4.1.1. **Setting Forms.** Attain at least 2,500 psi compressive strength before erecting forms on concrete footings supported by piling or drilled shafts, or on individual drilled shafts. Erect forms on spread footings and culvert footings after the footing concrete has aged at least 2 curing days as defined in Section 420.4.10., "Curing Concrete." Place concrete only after the forms and reinforcing steel have been inspected by the Engineer.

Support tie beam or cap forms by falsework on previously placed tie beams only if the tie beam concrete has attained a compressive strength of 2,500 psi and the member is properly supported to eliminate stresses not provided for in the design. Maintain curing as required until completion of the curing period.

Place superstructure forms or falsework on the substructure only if the substructure concrete has attained a compressive strength of 3,000 psi.

4.1.2. **Removal of Forms and Falsework.** Keep in place weight-supporting forms and falsework for bridge components and culvert slabs until the concrete has attained a compressive strength of 2,500 psi in accordance with Section 420.4.11., "Removal of Forms and Falsework." Keep all forms for mass placements in place for 4 days following concrete placement unless otherwise approved based on the outcome of the heat control plan outlined in Section 420.4.7.14., "Mass Placements."

4.1.3. **Placement of Superstructure Members.** Erect or place superstructure members or precast substructure members only after the substructure concrete has attained a compressive strength of 3,000 psi.

4.1.4. **Opening to Traffic.** Direct traffic culverts may be opened to construction traffic when the design strength specified in Section 421.4.1., "Classification of Concrete Mix Design," has been attained if curing is maintained. Obtain approval before opening direct traffic culverts to the traveling public. Open other noncritical structural and nonstructural concrete for service upon the completion of curing unless otherwise specified or directed.

4.1.5. **Post-Tensioned Construction.** Ensure strength requirements on the plans for structural elements designed to be post-tensioned are met for stressing and staged loading of structural elements.

4.1.6. **Backfilling.** Backfill in accordance with Section 400.3.3., "Backfill."

4.2. **Plans for Falsework and Forms.** Submit plans for falsework and forms for the following items: vertical forms for piers and single column bents; load supporting forms for caps and tie-beams; form attachments for bridges to be widened; and other items as indicated or directed. Provide design calculations when requested. Show all essential details of proposed forms, falsework, and bracing. Have a licensed professional engineer design, seal, and sign these plans. Department approval is not required, except as noted in Table 1 of Item 5, "Control of the Work," when forms or falsework are located such that public safety can be affected, but the Department reserves the right to request modifications to the plans. The Contractor is responsible for the adequacy of these plans. Design job-fabricated formwork assuming a weight of 150 pcf for concrete, and

include a liveload allowance of 50 psf of horizontal surface of the form. Do not exceed 125% of the allowable stresses used by the Department for the design of structures.

4.3. **Falsework.** Design and construct falsework to safely carry the maximum anticipated loads, including wind loads, and to provide the necessary rigidity. Consult AASHTO's *Guide Design Specifications for Bridge Temporary Works* and *Construction Handbook for Bridge Temporary Works* for falsework and shoring information not indicated below. Submit details in accordance with Section 420.4.2., "Plans for Falsework and Forms."

Design job-fabricated falsework assuming a weight of 150 pcf for concrete, and include a minimum liveload allowance of 50 psf of horizontal surface of the form. Do not exceed 125% of the allowable stresses used by the Department for the design of structures.

Do not exceed the manufacturer's maximum allowable working loads for moment and shear or end reaction for commercially produced structural units used in falsework. Include a minimum liveload allowance of 35 psf of horizontal form surface in determining the maximum allowable working load for commercially produced structural units.

Provide timber that is sound, in good condition, and free from defects that would impair its strength. Provide timber that meets or exceeds the species, size, and grade requirements in the submitted falsework plans.

Provide wedges made of hardwood or metal in pairs to adjust falsework to desired elevations to ensure even bearing. Do not use wedges to compensate for incorrectly cut bearing surfaces.

Use sills or grillages large enough to support the superimposed load without settlement. Take precautions to prevent settling of the supporting material unless the sills or grillages are founded on solid rock, shale, or other hard materials.

Place falsework that cannot be founded on a satisfactory spread footing on piling or drilled shafts with enough bearing capacity to support the superimposed load without settlement. Drive falsework piling to the required resistance determined by the applicable formula in Item 404, "Driving Piling." Design drilled shafts for falsework to carry the superimposed load using both skin friction and point bearing.

Weld in conformance with Item 448, "Structural Field Welding." Securely brace each falsework bent to provide the stiffness required, and securely fasten the bracing to each pile or column it crosses.

Remove falsework when it is no longer required or as indicated on the submitted falsework plan. Pull or cut off foundations for falsework at least 2 ft. below finished ground level. Completely remove falsework, piling, or drilled shafts in a stream, lake, or bay to the approved limits to prevent obstruction to the waterway.

4.4. **Forms.** Submit formwork plans in accordance with Section 420.4.2., "Plans for Falsework and Forms."

4.4.1. **General.** Provide forms of either timber or metal except where otherwise specified or permitted.

Design forms for the pressure exerted by a liquid weighing 150 pcf. Take the rate of concrete placement into consideration in determining the depth of the equivalent liquid. Include a minimum liveload allowance of 50 psf of horizontal surface for job-fabricated forms. Do not exceed 125% of the Department's allowable stresses for the design of structures.

Do not exceed the manufacturer's maximum allowable working loads for moment and shear or end reaction for commercially produced structural units used for forms. Include a minimum liveload allowance of 35 psf of horizontal form surface in determining the maximum allowable working load for commercially produced structural units.

Provide steel forms for round columns unless otherwise approved. Refer to Item 427, "Surface Finishes for Concrete," for additional requirements for off-the-form finishes.

Provide commercial form liners for imprinting a pattern or texture on the concrete surface as shown on the plans and specified in Section 427.4.3.5., "Form Liner Finish."

Provide forming systems that are practically mortar-tight, rigidly braced, and strong enough to prevent bulging between supports, and maintain them to the proper line and grade during concrete placement. Maintain forms in a manner that prevents warping and shrinkage. Do not allow offsets at form joints to exceed 1/16 in.

Use only material that is inert, non-biodegradable, and nonabsorptive for forms to be left in place.

Construct all forms to permit their removal without marring or damaging the concrete. Clean all forms and footing areas of any extraneous matter before placing concrete. Provide openings in forms if needed for the removal of laitance or foreign matter.

Treat the facing of all forms with bond-breaking coating of composition that will not discolor or injuriously affect the concrete surface. Take care to prevent coating of the reinforcing steel.

Complete all preparatory work before requesting permission to place concrete.

Cease placement if the forms show signs of bulging or sagging at any stage of the placement, and remove the portion of the concrete causing this condition immediately as directed. Reset the forms and securely brace them against further movement before continuing the placement.

4.4.2. **Timber Forms**. Provide properly seasoned, good-quality lumber that is free from imperfections that would affect its strength or impair the finished surface of the concrete. Provide timber or lumber that meets or exceeds the requirements for species and grade in the submitted formwork plans.

Maintain forms or form lumber that will be reused so it stays clean and in good condition. Do not use any lumber that is split, warped, bulged, or marred, or that has defects in any way that will produce inferior work. Promptly remove such lumber from the work.

Provide form lining for all formed surfaces except:

- the inside of culvert barrels, inlets, manholes, and box girders;
- surfaces that are subsequently covered by backfill material or are completely enclosed; and
- any surface formed by a single finished board or by plywood.

Provide form lining of an approved type such as masonite or plywood. Do not provide thin membrane sheeting such as polyethylene sheets for form lining.

Use plywood at least 3/4 in. thick. Place the grain of the face plies on plywood forms parallel to the span between the supporting studs or joists unless otherwise indicated on the submitted form drawings.

Use plywood for forming surfaces that remain exposed that meets the requirements for B-B Plyform Class I or Class II Exterior of the U.S. Department of Commerce Voluntary Product Standard PS 1.

Space studs and joists so the facing form material remains in true alignment under the imposed loads.

Space wales closely enough to hold forms securely to the designated lines, scabbed at least 4 ft. on each side of joints to provide continuity. Place a row of wales near the bottom of each placement.

Place facing material with parallel and square joints, securely fastened to supporting studs.

Place forms with the form panels symmetrical (long dimensions set in the same direction) for surfaces exposed to view and receiving only an ordinary surface finish as defined in Section 420.4.13., "Ordinary Surface Finish." Make horizontal joints continuous.

Make molding for chamfer strips or other uses of materials of a grade that will not split when nailed and can be maintained to a true line without warping. Dress wood molding on all faces. Fill forms at all sharp corners and edges with triangular chamfer strips measuring 3/4 in. on the sides unless otherwise shown on the plans.

Use metal form ties of an approved type or a satisfactory substitute of a type that permits ease of removal of the metal to hold forms in place. Cut back wire ties at least 1/2 in. from the face of the concrete.

Use devices to hold metal ties in place that are able to develop the strength of the tie and adjust to allow for proper alignment.

Entirely remove metal and wooden spreaders that separate the forms as the concrete is being placed.

Provide adequate clean-out openings for narrow walls and other locations where access to the bottom of the forms is not readily attainable.

4.4.3. **Metal Forms**. Requirements for timber forms regarding design, mortar-tightness, filleted corners, beveled projections, bracing, alignment, removal, reuse, and wetting also apply to metal forms except metal forms do not require lining unless specifically noted on the plans.

Use form metal thick enough to maintain the true shape without warping or bulging. Countersink all bolt and rivet heads on the facing sides. Design clamps, pins, or other connecting devices to hold the forms rigidly together and to allow removal without damage to the concrete. Use metal forms that present a smooth surface and line up properly. Keep metal free from rust, grease, and other foreign materials.

4.5. **Drains**. Install and construct weep holes and roadway drains as shown on the plans.

4.6. **Placing Reinforcement and Post-Tensioning**. Place reinforcement as provided in Item 440, "Reinforcement for Concrete." Do not weld reinforcing steel supports to other reinforcing steel except where shown on the plans.

Place post-tensioning ducts, anchorages, and other hardware in accordance with the approved prestressing details and Item 426, "Post-Tensioning." Keep ducts free of obstructions until all post-tensioning operations are complete.

4.7. **Placing Concrete**. Give the Engineer sufficient advance notice before placing concrete in any unit of the structure to permit the inspection of forms, reinforcing steel placement, and other preparations.

Do not place concrete when impending weather conditions would impair the quality of the finished work. Place concrete in early morning or at night or adjust the placement schedule for more favorable weather when conditions of wind, humidity, and temperature are such that concrete cannot be placed without the potential for weather-related distress.

Adequately illuminate the entire placement site as approved when mixing, placing, and finishing concrete in non-daylight hours.

Furnish adequate shelter to protect the concrete against damage from rainfall or freezing temperatures as outlined in this Item if changes in weather conditions require protective measures after work starts. Continue operations during rainfall only if approved. Use protective coverings for the material stockpiles. Cover aggregate stockpiles only to the extent necessary to control the moisture conditions in the aggregates.

Allow at least 1 curing day after the concrete has achieved initial set before placing strain on projecting reinforcement to prevent damage to the concrete.

4.7.1. **Placing Temperature**. Place concrete according to the following temperature limits for the classes of concrete defined in Section 421.4.1., "Classification of Concrete Mix Designs."

- Place Class C, F, H, K, or SS concrete only when its temperature at time of placement is between 50°F and 95°F. Increase the minimum placement temperature to 60°F if slag cement is used in the concrete.
- Place Class S concrete, used in this Item only as indicated for culvert top slabs, only when its temperature is between 50°F and 85°F. Increase the minimum placement temperature to 60°F if slag cement is used in the concrete.
- Place Class A, B, and D concrete only when its temperature at the time of placement is greater than 50°F.
- Place mass concrete in accordance with Section 420.4.7.14., "Mass Placements," only when its temperature at the time of placement is between 50°F and 75°F.

4.7.2. **Transporting Time.** Begin the discharge of concrete delivered in truck mixers within the times listed in Table 14 of Item 421, "Hydraulic Cement Concrete."

4.7.3. **Workability of Concrete.** Place concrete with a slump as specified in Section 421.4.2.5., "Slump." Water may be added to the concrete before discharging any concrete from the truck to adjust for low slump provided that the maximum mix design water–cement ratio is not exceeded. Mix concrete in accordance with Section 421.4.6., "Mixing and Delivering Concrete," after introduction of any additional water or chemical admixtures. Do not add water or chemical admixtures after any concrete has been discharged.

4.7.4. **Transporting Concrete.** Transport concrete by buckets, chutes, buggies, belt conveyors, pumps, or other methods.

Protect concrete transported by conveyors from sun and wind to prevent loss of slump and workability. Shade or wrap with wet burlap pipes through which concrete is pumped as necessary to prevent loss of slump and workability.

Arrange and use chutes, troughs, conveyors, or pipes so the concrete ingredients will not be separated. Terminate such equipment in vertical downspouts when necessary to prevent segregation. Extend open troughs and chutes, if necessary, down inside the forms or through holes left in the forms.

Keep all transporting equipment clean and free from hardened concrete coatings. Discharge water used for cleaning clear of the concrete.

4.7.5. **Preparation of Surfaces.** Thoroughly wet all forms and hardened concrete on which concrete is to be placed before placing concrete on them. Remove any remaining puddles of excess water before placing concrete. Provide surfaces that are in a moist, saturated surface-dry condition when concrete is placed on them.

Ensure the subgrade or foundation is moist before placing concrete on grade. Lightly sprinkle the subgrade if dry.

4.7.6. **Expansion Joints.** Construct joints and devices to provide for expansion and contraction in accordance with plan details.

Use light wire or nails to anchor any preformed fiber joint material to the concrete on 1 side of the joint.

Ensure finished joints conform to the plan details with the concrete sections completely separated by the specified opening or joint material.

Remove all concrete within the joint opening soon after form removal and again where necessary after surface finishing to ensure full effectiveness of the joint.

4.7.7. **Construction Joints.** A construction joint is the joint formed by placing plastic concrete in direct contact with concrete that has attained its initial set. Monolithic placement means the manner and sequence of concrete placing does not create a construction joint.

Make construction joints of the type and at the locations shown on the plans. Additional joints in other members are not permitted without approval. Place authorized additional joints using details equivalent to those shown on the plans for joints in similar locations.

Make construction joints square and normal to the forms unless otherwise required. Use bulkheads in the forms for all vertical joints.

Thoroughly roughen the top surface of a concrete placement terminating at a horizontal construction joint as soon as practical after initial set is attained.

Thoroughly clean the hardened concrete surface of all loose material, laitance, dirt, and foreign matter, and saturate it with water. Remove all free water and moisten the surface before concrete or bonding grout is placed against it. Ensure the surface of the existing concrete is in a saturated surface-dry condition (SSD) just before placing subsequent concrete. Wet the existing concrete by ponding water on the surface for 24 hr. before placing subsequent concrete. Use high-pressure water blasting if ponding is not possible to achieve SSD conditions 15 to 30 min. before placing the concrete. An SSD condition is achieved when the surface remains damp when exposed to sunlight for 15 min.

Draw forms tight against the existing concrete to avoid mortar loss and offsets at joints.

Bonding agents are not required unless indicated otherwise. Coat the joint surface with bonding mortar, grout, epoxy, or other material if a bonding agent is required as indicated on the plans. Provide Type V epoxy per DMS-6100, "Epoxies and Adhesives," for bonding fresh concrete to hardened concrete. Place the bonding epoxy on a clean, dry surface, and place the fresh concrete while the epoxy is still tacky. Place bonding mortar or grout on a surface that is SSD, and place the concrete before the bonding mortar or grout dries. Place other bonding agents in accordance with the manufacturer's recommendations.

4.7.8. **Handling and Placing**. Minimize segregation of the concrete and displacement of the reinforcement when handling and placing concrete. Produce a uniform, dense compact mass.

Ensure concrete free-falls no more than 5 ft. except in the case of drilled shafts, thin walls such as in culverts, or as allowed by other Items. Remove any hardened concrete splatter ahead of the plastic concrete.

Fill each part of the forms by depositing concrete as near its final position as possible. Do not deposit large quantities of concrete at 1 point and run or move the concrete along to fill the forms.

Deposit concrete in the forms in layers of suitable depth but no more than 36 in. deep unless otherwise permitted.

Avoid cold joints in a monolithic placement. Sequence successive layers or adjacent portions of concrete so they can be vibrated into a homogeneous mass with the previously placed concrete before it sets. Allow no more than 1 hr. to elapse between adjacent or successive placements of concrete when re-vibration of the concrete is shown on the plans except as otherwise allowed by an approved placing procedure. This time limit may be extended by 1/2 hr. if the concrete contains at least the minimum recommended dosage of a Type B or D admixture.

4.7.9. **Consolidation**. Carefully consolidate concrete and flush mortar to the form surfaces with immersion type vibrators. Do not use vibrators that operate by attachment to forms or reinforcement except where approved on steel forms.

Vibrate the concrete immediately after deposit. Systematically space points of vibration to ensure complete consolidation and thorough working of the concrete around the reinforcement, embedded fixtures, and into the corners and angles of the forms. Insert the vibrators vertically where possible. Vibrate the entire depth of each lift, allowing the vibrator to penetrate several inches into the preceding lift. Do not use the vibrator to move the concrete to other locations in the forms. Do not drag the vibrator through the concrete. Thoroughly consolidate concrete along construction joints by operating the vibrator along and close to but not against the joint surface. Continue the vibration until the concrete surrounding reinforcements and fixtures is completely

consolidated. Hand-spade or rod the concrete if necessary to ensure flushing of mortar to the surface of all forms.

4.7.10. **Installation of Dowels and Anchor Bolts.** Install dowels and anchor bolts by casting them in-place or by grouting with grout, epoxy, or epoxy mortar unless noted otherwise. Form or drill holes for grouting. Follow the manufacturer's recommended installation procedures for pre-packaged grout or epoxy anchor systems. Test anchors if required on the plans or by other Items.

Drill holes for anchor bolts to accommodate the bolt embedment required by the plans. Make holes for dowels at least 12 in. deep unless otherwise shown on the plans. Make the hole diameter at least twice the dowel or bolt diameter, but not exceeding the dowel or bolt diameter plus 1-1/2 in. when using cementitious grout or epoxy mortar. Make the hole diameter 1/16 to 1/4 in. greater than the dowel or bolt diameter when using neat epoxy unless indicated otherwise by the epoxy manufacturer.

Thoroughly clean holes of all loose material, oil, grease, or other bond-breaking substance, and blow them clean with filtered compressed air. Use a wire brush followed by oil-free compressed air to remove all loose material from the holes, repeating as necessary until no more material is removed. Ensure holes are in a surface-dry condition when epoxy type materials are used and in a surface-moist condition when cementitious grout is used. Develop and demonstrate for approval a procedure for cleaning and preparing the holes for installation of the dowels and anchor bolts. Completely fill the void between the hole and dowel or bolt with grouting material. Follow exactly the requirements for cleaning outlined in the product specifications for pre-packaged systems.

Provide hydraulic cement grout for cast-in-place or grouted systems in accordance with DMS-4675, "Cementitious Grouts and Mortars for Miscellaneous Applications." Provide a Type III epoxy per DMS-6100, "Epoxies and Adhesives," when neat epoxy is used for anchor bolts or dowels. Provide Type VIII epoxy per DMS-6100, "Epoxies and Adhesives," when an epoxy grout is used. Provide grout, epoxy, or epoxy mortar as the binding agent unless otherwise indicated on the plans.

Provide other anchor systems as required on the plans.

4.7.11. **Placing Concrete in Cold Weather.** Protect concrete placed under weather conditions where weather may adversely affect results. Permission given by the Engineer for placing during cold weather does not relieve the Contractor of responsibility for producing concrete equal in quality to that placed under normal conditions. Remove and replace concrete as directed at the Contractor's expense if it is determined unsatisfactory due to poor conditions.

Do not place concrete in contact with any material coated with frost or with a temperature of 32°F or lower. Do not place concrete when the ambient temperature in the shade is below 40°F and falling unless approved. Place concrete when the ambient temperature in the shade is at least 35°F and rising or above 40°F.

Provide and install recording thermometers, maturity meters, or other suitable temperature measuring devices to verify all concrete is effectively protected as follows:

- Maintain the temperature at all surfaces of concrete in bents, piers, culvert walls, retaining walls, parapets, wingwalls, top slabs of non-direct traffic culverts, and other similar formed concrete at or above 40°F for 72 hr. from the time of placement.
- Maintain the temperature of all other concrete, including the bottom slabs (footings) of culverts, placed on or in the ground above 32°F for 72 hr. from the time of placement.

Use additional covering, insulated forms, or other means and, if necessary, supplement the covering with artificial heating. Avoid applying heat directly to concrete surfaces. Cure as specified in Section 420.4.10., "Curing Concrete," during this period until all requirements for curing have been satisfied.

Have all necessary heating and covering material ready for use before permission is granted to begin placement when impending weather conditions indicate the possible need for temperature protection.

4.7.12. **Placing Concrete in Hot Weather.** Keep the concrete at or below the maximum temperature at time of placement as specified in Section 420.4.7.1., "Placing Temperature." Sprinkle and shade aggregate stockpiles or use ice, liquid nitrogen systems, or other approved methods as necessary to control the concrete temperature.

4.7.13. **Placing Concrete in Water.** Deposit concrete in water only when shown on the plans or with approval. Make forms or cofferdams tight enough to prevent any water current passing through the space in which the concrete is being deposited. Do not pump water during the concrete placing or until the concrete has set for at least 36 hr.

Place the concrete with a tremie or pump, or use another approved method, and do not allow it to fall freely through the water or disturb it after it is placed. Keep the concrete surface level during placement.

Support the tremie or operate the pump so it can be easily moved horizontally to cover all the work area and vertically to control the concrete flow. Submerge the lower end of the tremie or pump hose in the concrete at all times. Use continuous placing operations until the work is complete.

Design the concrete mix in accordance with Item 421, "Hydraulic Cement Concrete," with a minimum cement content of 650 lb. per cubic yard for concrete to be placed under water. Include an anti-washout admixture in the mix design as necessary to produce a satisfactory finished product.

4.7.14. **Mass Placements.** Develop and obtain approval for a heat control plan for monolithic placements designated on the plans as mass concrete to ensure the following during the heat dissipation period:

- the temperature differential between the central core of the placement and the exposed concrete surface does not exceed 35°F and
- the temperature at the central core of the placement does not exceed 160°F.

Use the ConcreteWorks© software available from the Department, or another approved method based on the guidelines in ACI 207, "Mass Concrete," to develop the heat control plan. The Department will make available technical assistance on the use of ConcreteWorks©. Develop the heat control plan using historical temperature ranges for the anticipated time of the mass placement. Re-create the plan if the work schedule shifts by more than one month.

The heat control plan may include a combination of the following elements:

- selection of concrete ingredients including aggregates, gradation, and cement types, to minimize heat of hydration;
- use of ice or other concrete cooling ingredients;
- use of liquid nitrogen dosing systems;
- controlling rate or time of concrete placement;
- use of insulation or supplemental external heat to control heat loss;
- use of supplementary cementing materials;
- use of a cooling system to control the core temperature; or
- vary the duration formwork remains in place.

Furnish and install 2 pairs of temperature recording devices, maturity meters, or other approved equivalent devices. Install devices to measure the surface temperature no more than 3 in. from the surface. Install devices to measure the core temperature a distance of half the least dimension from the nearest surface near the point of maximum predicted heat. Use these devices to simultaneously measure the temperature of the concrete at the core and the surface. Maintain temperature control methods for 4 days unless otherwise approved based on the submitted heat control plan. Do not use maturity meters to predict strength of mass concrete. Revise the heat control plan as necessary to maintain the temperature limitations shown above.

If the core temperature exceeds 160°F, the mass concrete element will be subject to review and acceptance by the Engineer using forensic analyses to determine its potential reduction in service life or performance. Proceed with subsequent construction on the affected element only when notified regarding acceptance.

Repair any resulting cracking if the temperature differential between the central core of the placement and the nearest concrete surface exceeds 35°F at no expense to the Department and revise the heat control plan as necessary to prevent further occurrences.

4.7.15. **Placing Concrete in Foundation and Substructure.** Do not place concrete in footings until the depth and character of the foundation has been inspected and permission has been given to proceed.

Place concrete footings upon seal concrete after the cofferdams are free from water and the seal concrete is cleaned. Perform any necessary pumping or bailing during the concreting from a suitable sump located outside the forms.

Construct or adjust all temporary wales or braces inside cofferdams as the work proceeds to prevent unauthorized construction joints.

Omit forms when footings can be placed in a dry excavation without the use of cofferdams, if approved, and fill the entire excavation with concrete to the elevation of the top of footing.

Place concrete in columns monolithically between construction joints unless otherwise directed. Columns and caps or tie beams supported on them may be placed in the same operation or separately. Allow for settlement and shrinkage of the column concrete, if placed in the same operation, by placing it to the lower level of the cap or tie beam, and delay placement between 1 and 2 hr. before proceeding with the cap or tie beam placement.

4.7.16. **Placing Concrete in Box Culverts.** Allow between 1 and 2 hr. to elapse where the top slab and walls are placed monolithically in culverts more than 4 ft. in clear height before placing the top slab to allow for settlement and shrinkage in the wall concrete.

Accurately finish the footing slab at the proper time to provide a smooth uniform surface. Finish top slabs that carry direct traffic as specified in Item 422, "Concrete Superstructures." Give top slabs of fill type culverts a float finish.

4.8. **Extending Existing Substructures.** Verify pertinent dimensions and elevations of the existing structure before ordering any required materials.

4.8.1. **Removal.** Remove portions of the existing structure to the lines and dimensions shown on the plans or as directed. Dispose of these materials as shown on the plans or as directed. Repair any portion of the remaining structure damaged as a result of the construction.

Do not use explosives to remove portions of the existing structure unless approved in writing. Do not use a demolition ball, other swinging weight, or impact equipment unless shown on the plans. Use pneumatic or hydraulic tools for final removal of concrete at the "break" line. Use removal equipment, as approved that will not damage the remaining concrete.

4.8.2. **Reuse of Removed Portions of Structure.** Detach and remove all portions of the old structure that are to be incorporated into the extended structure to the lines and details as specified on the plans or as directed. Move the unit to be reused to the new location specified using approved methods. Place the reinforcement and extension concrete according to the plan details.

4.8.3. **Splicing Reinforcing Steel.** Splice new reinforcing bars to exposed bars in the existing structure using lap splices in accordance with Item 440, "Reinforcement for Concrete," unless otherwise shown on the plans. The new reinforcing steel does not need to be tied to the existing steel where spacing or elevation does not match that of the existing steel provided the lap length is attained. Weld in accordance with Item 448, "Structural Field Welding," when welded splices are permitted. Install any required dowels in accordance with Section 420.4.7.10., "Installation of Dowels and Anchor Bolts."

4.8.4. **Concrete Preparation.** Roughen and clean concrete surfaces that are in contact with new construction before placing forms. Prepare these construction joint surfaces in accordance with Section 420.4.7.7., "Construction Joints."

4.9. **Treatment and Finishing of Horizontal Surfaces**. Strike off to grade and finish all unformed upper surfaces. Do not use mortar topping for surfaces constructed under this Section.

Float the surface with a suitable float after the concrete has been struck off.

Slope the tops of caps and piers between bearing areas from the center slightly toward the edge, and slope the tops of abutment and transition bent caps from the backwall to the edge, as directed, so water drains from the surface. Give the concrete a smooth trowel finish. Construct bearing areas for steel units in accordance with Section 441.3.11.6., "Bearing and Anchorage Devices." Give the bearing area under the expansion ends of concrete slabs and slab and girder spans a steel-trowel finish to the exact grades required. Give bearing areas under elastomeric bearing pads or nonreinforced bearing seat buildups a textured, wood float finish. Do not allow the bearing area to vary from a level plane more than 1/16 in. in all directions.

Cast bearing seat buildups or pedestals for concrete units integrally with the cap or a construction joint. Provide a latex-based mortar, an epoxy mortar, or an approved proprietary bearing mortar for bearing seat buildups cast with a construction joint. Mix mortars in accordance with the manufacturer's recommendations. Construct pedestals of Class C concrete, reinforced as shown on the plans or as indicated in Figure 1 and Figure 2. The Engineer of Record will design pedestals higher than 12 in.

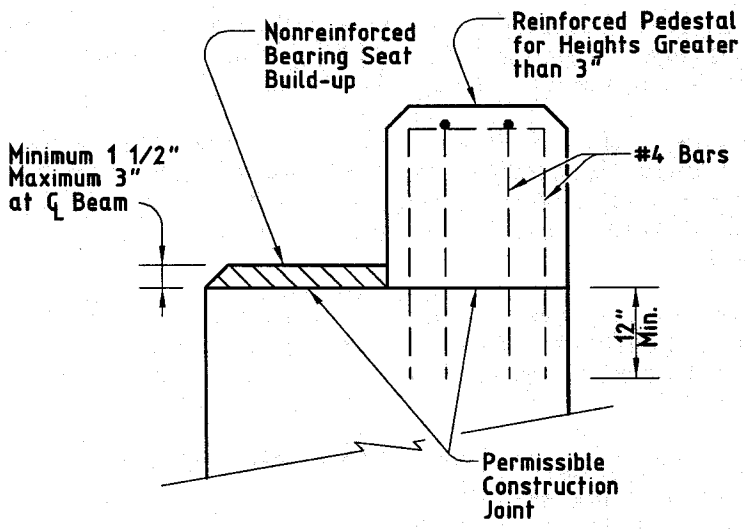

Figure 1
Section through Bearing Seat Buildups

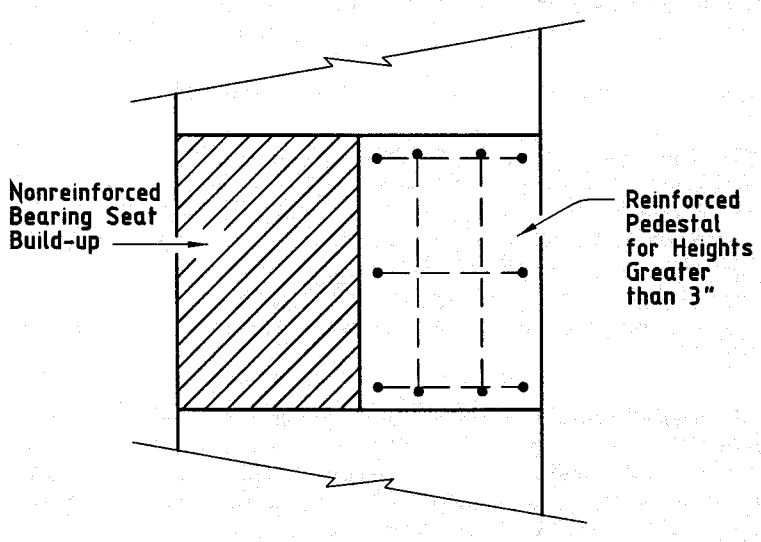

Figure 2
Plan View of Bearing Seat Buildups

4.10. **Curing Concrete.** Obtain approval of the proposed curing methods, equipment, and materials before placing concrete. The Engineer may require the same curing methods for like portions of a single structure. Inadequate curing or facilities may delay all concrete placements on the job until remedial action is taken.

A curing day is a calendar day when the temperature, taken in the shade away from artificial heat, is above 50°F for at least 19 hr. or, on colder days if the temperature of all surfaces of the concrete is maintained above 40°F, for the entire 24 hr. The required curing period begins when all concrete has attained its initial set unless indicated otherwise. Tex-440-A may be used to determine when the concrete has attained its initial set.

Cure all concrete for 4 consecutive days except as allowed for the curing options listed below. Use form or membrane curing for vertical surfaces unless otherwise approved. Use only water curing for horizontal surfaces of HPC or mass concrete. Use water or membrane curing for horizontal or unformed surfaces for all other concrete.

Use one of the following curing options for vertical surfaces, unless indicated otherwise.

- Form cure for 48 hr. after placement.
- Form cure for 12 hr. after placement followed by membrane curing.
- For HPC Concrete, form cure for 48 hr. after placement followed by membrane curing.
- For mass concrete, form cure as required by the heat control plan followed by membrane curing if forms are removed before 4 days.

Apply membrane curing, if used, within 2 hr. of form removal.

Use only water curing in accordance with this Section for the top surface of any concrete unit upon which concrete is to be placed and bonded at a later interval (stub walls, caps with backwalls, risers, etc.).

Cure all other concrete as specified in the pertinent Items. Use the following methods for curing concrete, subject to the requirements of this Item.

4.10.1. **Form Curing.** When forms are left in intimate contact with the concrete, other curing methods are not required except for exposed surfaces and for cold weather protection. Use another approved curing method if forms are removed before the 4-day required curing period.

4.10.2. **Water Curing.** Keep all exposed surfaces of the concrete wet continuously for the required curing time. Use water curing in accordance with concrete mixing water in Section 421.2.5., "Water." Do not use seawater or water that stains or leaves an unsightly residue.

4.10.2.1. **Blankets.** Keep the concrete continuously wet by maintaining wet cotton or burlap mats in direct contact with the concrete for the required curing time. Weight the mats adequately to provide continuous contact with all concrete. Cover surfaces that cannot be cured by direct contact with mats, forming an enclosure well anchored to the forms or ground so outside air cannot enter the enclosure. Provide sufficient moisture inside the enclosure to keep all surfaces of the concrete wet.

4.10.2.2. **Water Spray.** Overlap sprays or sprinklers to keep all unformed surfaces continuously wet.

4.10.2.3. **Ponding.** Cover the surfaces with at least 2 in. of clean granular material, kept wet at all times, or at least 1 in. deep water. Use a dam to retain the water or saturated granular material.

4.10.3. **Membrane Curing.** Choose either Type 1-D or Type 2 membrane-curing compound unless otherwise shown on the plans. Use the same type of curing compound on an individual member.

Apply membrane curing just after free moisture has disappeared at a rate of approximately 180 sq. ft. per gallon. Do not spray curing compound on projecting reinforcing steel or concrete that will later form a construction joint. Do not apply membrane curing to dry surfaces. Dampen formed surfaces and surfaces that have been given a first rub so they are moist at the time of application of the membrane.

Leave the film unbroken for the minimum curing period specified when membrane is used for complete curing. Correct damaged membrane immediately by reapplication of membrane. Polyethylene sheeting, burlap-polyethylene mats, or laminated mats in close contact with the concrete surfaces are equivalent to membrane curing.

4.11. **Removal of Forms and Falsework.** Remove forms for vertical surfaces after the concrete has aged a minimum of 12 hr. after initial set provided the removal can be done without damage to the concrete unless otherwise directed. Keep forms for mass placements in place for 4 days following concrete placement unless otherwise approved based on the outcome of the heat control plan outlined in Section 420.4.7.14., "Mass Placements."

Leave in place weight-supporting forms and falsework spanning more than 1 ft. for all bridge components and culvert slabs except as directed otherwise until the concrete has attained a compressive strength of 2,500 psi. Remove forms for other structural components as necessary.

Remove inside forms (walls and top slabs) for box culverts and sewers after concrete has attained a compressive strength of 1,800 psi if an approved overhead support system is used to transfer the weight of the top slab to the walls of the box culvert or sewer before removal of the support provided by the forms.

Forms or parts of forms may be removed only if constructed to permit removal without disturbing forms or falsework required to be left in place for a longer period on other portions of the structure.

Remove all metal appliances used inside forms for alignment to a depth of at least 1/2 in. from the concrete surface. Make the appliances so metal may be removed without undue chipping or spalling of the concrete, and so it leaves a smooth opening in the concrete surface when removed. Do not burn off rods, bolts, or ties.

Remove all forms and falsework unless otherwise directed.

4.12. **Defective Work.** Repair defective work as soon as possible. Remove and replace at the expense of the Contractor any defect that cannot be repaired to the satisfaction of the Engineer.

4.13. **Ordinary Surface Finish.** Apply an ordinary surface finish to all concrete surfaces. Provide flat or textured surfaces as specified with uniform appearance. Address defects and surface irregularities not consistent with the intent of the expected finish by the following:

- Chip away all loose or broken material to sound concrete where porous, spalled, or honeycombed areas are visible after form removal.
- Repair spalls in accordance with the procedures outlined in the *Concrete Repair Manual* available on the Department's website.
- Clean and fill holes or spalls caused by the removal of form ties, etc., with latex grout, cement grout, or epoxy grout as approved. Fill only the holes. Do not blend the patch with the surrounding concrete. On surfaces to receive a rub finish in accordance with Item 427, "Surface Finishes for Concrete," chip out exposed parts of metals chairs to a depth of 1/2 in. and repair the surface.
- Remove all fins, rust staining, runs, drips, or mortar from surfaces that will be exposed. Smooth all form marks and chamfer edges by grinding or dry-rubbing.
- Ensure all repairs are dense, well-bonded, and properly cured. Finish exposed large repairs to blend with the surrounding concrete where a higher class of finish is not specified.

Apply an ordinary surface finish as the final finish to the following exposed surfaces unless noted otherwise:

- inside and top of inlets,
- inside and top of manholes,
- inside of sewer appurtenances, and
- inside of culvert barrels.

Form marks and chamfer edges do not need to be smoothed for the inside of culvert barrels.

5. MEASUREMENT

This Item will be measured by the cubic yard, square yard, foot, square foot, or by each structure.

5.1. **General**. Concrete quantities will be based on the dimensions shown on the plans or those established in writing by the Engineer.

In determining quantities, no deductions will be made for chamfers less than 2 in. or for embedded portions of steel or prestressed concrete beams, piling, anchor bolts, reinforcing steel, drains, weep holes, junction boxes, electrical or telephone conduit, ducts and voids for prestressed tendons, or embedded portions of light fixtures.

Variation in concrete headwall quantity incurred when an alternate bid for pipe is permitted will not be cause for payment adjustment.

Quantities revised by a change in design, measured as specified, will be increased or decreased and included for payment.

5.2. **Plans Quantity**. Structure elements designated in Table 1 and measured by the cubic yard are plans quantity measurement items. The quantity to be paid for plans quantity items is the quantity shown in the proposal unless modified by Article 9.2., "Plans Quantity Measurement." Additional measurements or calculations will be made if adjustments of quantities are required.

No adjustment will be made for footings or other in-ground elements where the Contractor has been allowed to place concrete in an excavation without forms.

Table 1
Plans Quantity Payment
(Cubic Yard Measurement Only)

Culverts and culvert wing walls	Abutments
Headwalls for pipe	Footings
Retaining walls	Pile bent caps
Inlets and manholes	Post-tensioned elements

Note—Other elements, including pier and bent concrete, may be paid for as "plans quantity" when shown on the plans.

5.3. **Measured in Place.** Items not paid for as "plans quantity" will be measured in place.

6. PAYMENT

The work performed and materials furnished in accordance with this Item and measured as provided under "Measurement" will be paid for at the unit price bid for the class of concrete and element identified and by the special designation when appropriate. This price is full compensation for furnishing, hauling, and mixing concrete materials; furnishing, bending, fabricating, splicing, welding and placing the required reinforcement; clips, blocks, metal spacers, ties, wire, or other materials used for fastening reinforcement in place; furnishing, placing, and stressing post-tensioning system; placing, finishing, and curing concrete; mass placement controls; applying ordinary surface finish; furnishing and placing drains, metal flashing strips, and expansion-joint material; excavation, subgrade preparation; and forms and falsework, equipment, labor, tools, and incidentals.

Price will be adjusted in accordance with Article 421.6., "Measurement and Payment" when required to address non-compliance of project acceptance testing.

Design and installation of foundations for falsework is at the Contractor's expense.

In addition to the work described above, for extending structures the unit prices bid for the various classifications of concrete shown are full compensation for removing and disposing of, if necessary, the designated portion of the existing structure; removing, stockpiling if necessary, and replacing headwall units for reuse; cleaning, bending, and cutting of exposed reinforcing steel; splicing of new reinforcing steel to existing reinforcing steel; installation of dowels; and cleaning and preparing existing concrete surfaces.

Item 423
Retaining Walls

1. DESCRIPTION

Furnish, construct, and install retaining walls.

2. MATERIALS

2.1. **General.** Furnish materials in accordance with the following:

- Item 420, "Concrete Substructures,"
- Item 421, "Hydraulic Cement Concrete,"
- Item 440, "Reinforcement for Concrete,"
- Item 445, "Galvanizing,"
- Item 458, "Waterproofing Membranes for Structures," and
- Item 556, "Pipe Underdrains."

Use concrete for retaining walls that conforms to the requirements of Table 1 unless otherwise shown on the plans.

Table 1
Concrete for Retaining Walls

Application	Concrete
Cast-in-place, non-reinforced	Class A
Cast-in-place, reinforced	Class C
Precast	Class H, f'_c = 4,000 psi

Furnish concrete for machine-made concrete block units in accordance with ASTM C90, Class 1, Type II, except the minimum 28-day compressive strength must be 4,000 psi with maximum moisture absorption of 7%.

Provide Type 1 filter fabric in accordance with DMS-6200, "Filter Fabric." Provide filter fabric rated as UV-resistant when used as part of the exposed facing for a temporary wall.

Joint fillers, pads, waterstops, and other incidental materials must be as shown on the plans or approved by the Engineer.

Epoxy coat all steel used in concrete panels and coping including connectors, dowels, stirrups, and reinforcing steel when the plans call for epoxy coating of steel earth reinforcements.

2.2. **Definitions.** This Item uses the following terms:

- **Permanent Wall.** A retaining wall with a design service life of 75 years. All walls are presumed to be permanent walls unless otherwise specified on the plans.
- **Temporary Wall.** A retaining wall so designated by description, with a design service life of 3 years.
- **Mechanically Stabilized Earth (MSE) Wall.** A wall consisting of a volume of select backfill with tensile earth reinforcement elements distributed throughout. Permanent MSE walls use a precast concrete panel as a facing element. Temporary MSE walls use welded wire fabric with filter fabric backing as a facing element.
- **Concrete Block Wall.** A retaining wall that uses machine-made, precast concrete block units as facing elements. The walls may use a volume of select fill with tensile earth reinforcements distributed throughout, or may use only the facing unit and unit fill weight for support.

2.3. **Fabrication.**

2.3.1. **Cast-in-Place.** Meet Item 420, "Concrete Substructures."

2.3.2. **Formed Precast.** Meet Item 424, "Precast Concrete Structural Members (Fabrication)."

2.3.3. **Machine-Made Precast.** Furnish machine-made concrete block units in accordance with ASTM C90, sampled and tested in accordance with ASTM C140. Furnish units with molded dimensions within 1/8 in. of specified dimensions, except height must be within 1/16 in.

2.4. **Backfill.**

2.4.1. **Non-Select.** Furnish non-select backfill for walls other than temporary and permanent MSE and concrete block walls as indicated on the plans. Non-select fill will meet Item 132, "Embankment," of the type specified on the plans. Provide material with a maximum plasticity index of 30 if no type is specified as determined by Tex-106-E.

2.4.2. **Select.** Select backfill is required in specific areas of permanent and temporary MSE and concrete block-type retaining walls. Provide select backfill that is free from organic or otherwise deleterious materials and that conforms to the gradation limits shown in Table 2 as determined by Tex-401-A.

Provide backfill that does not contain shale, caliche, or other soft, poor-durability coarse aggregate particles. Reclaimed Asphalt Pavement (RAP) is not allowed. Crushed Concrete or manufactured sand is allowed for temporary walls with a service life of 3 years or less. Test each source of backfill for durability/soundness using Tex-411-A, 5-cycle magnesium sulfate soundness. Backfill material with a maximum 5-cycle soundness loss exceeding 25% will be rejected. Alternately, Tex-461-A, Micro-Deval abrasion may be used if the corresponding results show loss is not greater than 20%, otherwise Tex-411-A governs aggregate verification.

Type AS, BS, and DS particles larger than 1/4 in. must be angular or completely crushed. Provide mechanically crushed gravel or stone backfill. Gravel from each aggregate source will have a minimum of 95% two or more mechanically induced crushed faces, as Tex-460-A, Part I determines. Rounded rock or rounded gravel is not allowed. Natural sand meeting the requirements of this Section is permitted for use.

Table 2
Select Backfill Gradation Limits

Type	Sieve Size	Percent Retained
AS	3"	0
	1/2"	50–100
	#4	See Note
	#40	85–100
	#200	95–100
BS	3"	0
	#4	See Note
	#40	40–100
	#200	85–100
CS	3"	0
	#4	See Note
	#200	75–100
DS	3"	0
	3/8"	85–100
	#200	95–100

Note—Use No. 4 sieve for determination of rock backfill as described in this main paragraph, "Backfill."

When the backfill gradation results in 85% or more material retained on the No. 4 sieve, the backfill will be considered rock backfill. All Type DS backfill is considered rock backfill.

In addition to the requirements for Type CS select fill, the fraction finer than the No. 200 sieve must have a Plasticity Index (PI) in accordance with Tex-106-E not greater than 6.

Furnish Type BS backfill for permanent walls; Type CS backfill for temporary walls; and Type DS backfill for areas of walls subject to inundation unless otherwise shown on the plans, or below the 100-year flood elevation as noted on the plans.

Furnish backfill meeting the requirements of this Section but with a maximum particle size of 3/4 in. when nonmetallic or epoxy coated earth reinforcements are used.

2.4.3. **Drainage Aggregate.** Use drainage aggregate to fill the void within concrete block units and in the zone 1 ft. behind the units. Provide drainage aggregate that is free from organic or otherwise deleterious materials and that conforms to the gradation limits in Table 3 as Tex-110-E determines.

Table 3
Drainage Aggregate Gradation Limits

Sieve Size	Percent Retained
1"	0
3/4"	25–50
1/2"	50–100
#4	75–100

2.4.4. **Cement-Stabilized Backfill.** Use cement-stabilized backfill when required or as approved. Stabilize Type CS backfill with 5% hydraulic cement by dry weight of the backfill material. Use a stationary plant to thoroughly mix the backfill material, cement, and water. Place and compact the backfill within 2 hours of mixing. Provide special drainage provisions when cement-stabilized backfill is used, as shown on the plans.

2.4.5. **Electrochemical.** Provide backfill meeting the following additional requirements for permanent retaining wall systems using galvanized metallic earth reinforcements:

- The pH is between 5.5 and 10.0 as Tex-128-E determines.
- Resistivity is more than 3,000 ohm-cm as Tex-129-E determines.
- Material with resistivity between 1,500 and 3,000 ohm-cm may be used if the chloride content is less than 100 ppm and the sulfate content is less than 200 ppm as Tex-620-J determines.

Perform electrochemical testing on the raw, unstabilized backfill material when cement-stabilized backfill is used.

2.5. **Earth Reinforcements.** Furnish earth reinforcements that meet the design requirements. Galvanize or epoxy coat all steel elements for permanent walls in contact with soil. Epoxy coat in accordance with Item 440, "Reinforcement for Concrete," except provide a minimum 18-mil coating thickness. Epoxy coat the reinforcing only when shown on the plans or as approved. Use connection hardware that is likewise nonmetallic or epoxy coated when using nonmetallic or epoxy coated earth reinforcements.

3. CONSTRUCTION

3.1. **General.** Construct retaining walls in accordance with details shown on the plans, on the approved working drawings, and to the pertinent requirements of the following Items:

- Item 110, "Excavation"
- Item 132, "Embankment"
- Item 400, "Excavation and Backfill for Structures"
- Item 420, "Concrete Substructures"
- Item 458, "Waterproofing Membranes for Structures"
- Item 556, "Pipe Underdrains"

Construct required piling or drilled shafts in accordance with the pertinent specification.

3.2. **Options.** When optional design details are shown on the plans, the Contractor is required to use the same facing design within an area of continuous retaining walls.

Provide drawings for review indicating the proposed design arrangement when proposing the use of 2 or more systems.

3.3. **Working Drawings.** When proprietary wall systems are used for permanent or temporary walls, submit casting drawings, construction drawings, and design calculations bearing the seal of a licensed professional engineer for review and approval following the Department's *Guide to Electronic Shop Drawing Submittal* process. Upon completion of construction, submit a set of reproducible as-built drawings.

3.3.1. **Casting Drawings.** Include all information necessary for casting wall elements, including railing and coping when prefabricated. Show shape and dimensions of panels; size, quantity, and details of the reinforcing steel; quantity, type, size, and details of connection and lifting hardware; and additional necessary details.

3.3.2. **Construction Drawings.** Include a numbered panel layout showing horizontal and vertical alignment of the walls as well as the existing and proposed groundlines. Include all information needed to erect the walls, including the proposed leveling pad elevations; the type and details of the soil reinforcing system (if applicable); the details and manufacturer of all pads, fillers, and filter fabric; the limits and dimensions of structural backfill; details necessary to incorporate coping, railing, inlets, drainage, and electrical conduit; and additional necessary details.

Leveling pad elevations may vary from the elevations shown on the plans. Provide at least 1 ft. of cover from the top of the leveling pad to finish grade unless a different minimum cover or a specified minimum leveling pad elevation is shown.

3.3.3. **Design Calculations.** Include calculations covering the range of heights and loading conditions on the project. Calculations for both internal and external stability as described on the plans will be required. Include a summary of all design parameters used; material types, strength values, and assumed allowables; loads and loading combinations; and factor-of-safety parameters.

3.4. **Permanent MSE Walls.** Grade the foundation for the structure level to a width equal or exceeding the length of the reinforcing system. Perform proof rolling on retaining wall foundation area to identify any loose, soft, or unsuitable materials in accordance with Item 216, "Proof Rolling." Material not meeting a maximum rut depth of 1 in. per pass of pneumatic tire roller should continue to be rolled or removed and replaced with suitable material. Pneumatic tire rolling will be waived for portions of wall with a reinforcement length of 8'; for these conditions proof rolling will be required with a smooth-wheeled vibratory roller or other approved roller.

Place drilled shafts and piling located within the MSE volume before construction of the wall. Place any required pipe underdrain before construction of the wall. Complete MSE wall construction before construction of abutment caps and abutment wing walls. Completion of walls and abutment should be in conjunction with project phasing or to allow for completion of walls that meets the proper placement and compaction at abutments.

Place the concrete leveling pad as shown on the construction drawings. Provide a wood float finish, and wait a minimum of 24 hr. before beginning panel erection. No curing or strength testing of the leveling pad concrete is required.

Shim the first row of panels as necessary to achieve correct alignment. Use plastic shims or other material that will not deteriorate. Remove and replace the leveling pad or provide a grout level-up as directed if the required shim height exceeds 1 in.

Place filter fabric behind the wall along the joint between the leveling pad and the panels. Grout areas where filter fabric spans more than 6 in. at leveling pad steps.

Place and compact fill material over the leveling pad to an elevation even with or above the surrounding ground after backfilling the first row of panels. Do not allow water to accumulate and stand at the base of the wall.

Place filter fabric behind all wall joints and at the intersection of retaining walls with other structures, including riprap. Cover joints at least 6 in. on each side and use adhesive to hold the filter fabric in place.

Exercise care while lifting, setting, and aligning panels to prevent damage to the panels. Discontinue any operation that results in chipping, spalling, or cracking of panels. Remove and replace damaged panels, or repair as approved by the Engineer.

Provide external bracing for the initial row of panels. Use wooden wedges, clamps, or other means necessary to maintain position and stability of panels during placement and compaction of backfill. Remove wooden wedges as soon as the panel or coping above the wedged element is erected and backfilled. Remove all wedges after completing the wall.

Review plumbness and position of each row of panels before placing the subsequent row. Remove and rebuild any portion of the wall that is out of tolerance. Modify panel batter and bracing, and backfill material, placement, and compaction methods as required to maintain wall tolerances.

Construct walls to a local vertical and horizontal alignment tolerance of 3/4 in. when measured along a 10-ft. straightedge relative to vertical and horizontal wall control line. Construct walls to an overall vertical tolerance (plumbness from top to bottom) of 1/2 in. per 10 ft. of wall height. Construct walls so the maximum offset at any panel joint is between 3/8 in. and 3/4 in. and no joint is open to the extent the filter fabric is visible from the front of the wall.

Place backfill to closely follow the erection of each row of panels. Place the select and embankment backfill to the same elevation where possible, and operate the compaction equipment over the interface. Do not create a continuous, distinct, vertical joint between the select and embankment backfill. Complete the embankment after construction of the retaining wall.

Maintain the stability of the interface area between the existing ground and the select fill when building a wall against existing ground. Remove and recompact any material that loosens, caves, or fails.

Compact backfill to provide at least 95% of density determined in accordance with Tex-114-E. Field density determination will be made in accordance with Tex-115-E.

Sprinkle backfill as required to ensure adequate uniformly distributed moisture in each lift before and during compaction. Place fill in lifts of 8 in. or less (loose measurement). Place fill in a manner that avoids segregation of the fill. Decrease the lift thickness if necessary to obtain the required compaction. Use hand-operated or walk-behind compaction equipment in the 3 ft. wide strip adjacent to the wall panels. Do not displace panels or distort or damage the reinforcement system during compaction. Modify backfill material, placement, and compaction methods as necessary to meet density requirements while maintaining wall tolerances.

Place rock backfill or material the Engineer determines too coarse for density testing in accordance with Section 132.3.4.1., "Ordinary Compaction."

Place and compact the backfill to the reinforcement level, at each earth reinforcement level, before placing the reinforcement. Place earth reinforcements perpendicular to the face of the wall. Remove slack in connections before placing backfill. Pre-tension each layer of reinforcement to remove slack before placing backfill for systems using nonmetallic earth reinforcements. Use devices capable of mechanically applying and holding the required force. Do not operate tracked equipment directly on any reinforcement.

Cover the rock backfill with filter fabric before placing the 2 ft. of backfill immediately below the pavement structure or top of wall when rock backfill is used. Overlap the fabric at least 18 in. at splices, and extend it past the edge of the rock backfill at least 18 in. Use backfill that contains sufficient fines to fill the voids in a

compacted state above the filter fabric. Place a horizontal layer of filter fabric as noted above when transitioning from rock backfill to finer grained backfill anywhere within the wall volume.

Prevent surface water or rainwater from damaging the retaining walls during construction. Shape the backfill to prevent water from ponding or flowing on the backfill or against the wall face. Remove and replace any portion of the retaining wall damaged or moved out of tolerance by erosion, sloughing, or saturation of the retaining wall or embankment backfill.

3.5. **Temporary MSE Walls.** Provide a facing system rigid enough to maintain a smooth and straight wall face both during and after construction.

Grade and compact the foundation for the structure as described in Section 423.3.4., "Permanent MSE Walls."

Place earth reinforcement and facing system in accordance with the approved working drawings. Backfill the 2-ft. zone immediately behind the facing with clean, coarse rock meeting the requirements of Coarse Aggregate Grade 1, 2, or 3 of Item 421, "Hydraulic Cement Concrete," or of Type DS backfill as described in Section 423.2.4.2., "Select." Cement-stabilized backfill as described in Section 423.2.4.4., "Cement-Stabilized Backfill," may be used in place of the coarse rock.

Place and compact backfill in accordance with Section 423.3.4., "Permanent MSE Walls."

Construct walls to a vertical and horizontal alignment tolerance of 3 in. when measured along a 10-ft. straightedge. Construct walls to an overall vertical tolerance (plumbness from top to bottom) of 2 in. per 10 ft. of wall height. Place adjacent facing elements so the maximum out-of-plane offset at any facing element joint is less than 1 in. Place facing elements and filter fabric with no gaps in the facing or fabric.

Prevent surface water or rainwater from damaging the retaining walls during and after construction. Place temporary berms or curbs, shape the backfill, or use other approved methods to prevent water from flowing against or over the wall face. Remove and replace any portion of the wall damaged or moved out of tolerance by erosion, sloughing, or saturation of the retaining wall or embankment backfill.

3.6. **Concrete Block Retaining Walls.** The concrete block units may be sampled and tested by the Engineer before shipment or upon delivery to the construction site. Display for approval, samples of block units indicating the color, texture, and finish. Store, transport, and handle all block units carefully to prevent cracking or damage.

Grade and compact the foundation for the structure, and place the leveling pad as described in Section 423.3.4., "Permanent MSE Walls."

Place the concrete block facing units in accordance with the approved working drawings. Fill the voids within the units and fill the 1-ft. zone immediately behind the facing with drainage aggregate as described in Section 423.2.4.3., "Drainage Aggregate." Systems tested without unit fill may omit the fill as indicated on the approved drawings. Systems with approved filter fabric details may omit the drainage aggregate in the 1-ft. zone immediately behind the facing.

Place reinforcements and backfill for walls using earth reinforcements in accordance with the requirements of Section 423.3.4., "Permanent MSE Walls." Pay particular attention to the connection details of the earth reinforcements to the concrete block units.

Construct walls to a vertical and horizontal alignment tolerance of 1-1/2 in. when measured along a 10-ft. straightedge. Construct walls to an overall vertical tolerance (deviation from the vertical or battered control line, top to bottom) of 1 in. per 10 feet of wall height. Place adjacent facing elements so the maximum out-of-plane offset at any facing element joint is less than 1 in. Place facing elements with maximum 1/4-in. gaps between block units.

Prevent surface water or rainwater from damaging the retaining walls during construction. Shape the backfill to prevent water from ponding or flowing on the backfill or against the wall face. Remove and replace all portions of the retaining wall damaged or moved out of tolerance by erosion, sloughing, or saturation of the retaining wall or embankment backfill.

4. MEASUREMENT

This Item will be measured by the square foot of the front surface area of the wall. Unless otherwise shown on the plans, the area will be measured from 1 ft. below finished grade of the ground line on the face of the exterior wall to the top of the wall including any coping required (not including railing).

This is a plans quantity measurement Item. The quantity to be paid is the quantity shown in the proposal unless modified by Article 9.2., "Plans Quantity Measurement." Additional measurements or calculations will be made if adjustments of quantities are required.

5. PAYMENT

The work performed and materials furnished in accordance with this Item and measured as provided under "Measurement" will be paid for at the unit price bid for "Retaining Walls" of the type or special surface finish specified. This price is full compensation for excavation in back of retaining walls and for footings; furnishing and placing footings, leveling pads, copings, and traffic railing foundations; furnishing, placing, and compacting backfill (except in embankment areas), including cement for stabilization; proof rolling; furnishing and placing concrete, reinforcing steel, waterproofing material, filter material and drain pipe, joint material, water stop, and filter fabric when required; fabricating, curing, and finishing all panels; furnishing and placing earth reinforcement, anchorage systems, and fasteners; wall erection; and equipment, labor, tools, and incidentals.

Retaining wall backfill areas that are also in embankment areas will be considered part of the quantities measured and paid for under Item 132, "Embankment."

When drilled shafts are required, they will be measured and paid for as specified in Item 416, "Drilled Shaft Foundations." When piling is required, it will be measured and paid for as specified on the plans for piling of the appropriate type.

Item 450
Railing

1. DESCRIPTION

Construct railing of concrete, steel, aluminum, or a combination of these materials, including necessary anchorage for the railing on bridges, culverts, walls, or other structures as shown on the plans.

2. MATERIALS

Use materials that conform to requirements of the following Items.

- Item 421, "Hydraulic Cement Concrete,"
- Item 440, "Reinforcement for Concrete,"
- Item 441, "Steel Structures,"
- Item 442, "Metal for Structures,"
- Item 445, "Galvanizing," and
- Item 540, "Metal Beam Guard Fence."

Provide an approved Type III, Class C epoxy or an epoxy of the type and class stated on the plans where epoxy anchors are allowed or required for installing drilled and epoxied rail anchorage reinforcement or rail anchor bolts in accordance with DMS-6100, "Epoxies and Adhesives." Use other materials if shown on the plans. Provide only dual cartridge epoxy systems mixed with a static mixing nozzle supplied by the epoxy adhesive manufacturer and dispensed with a tool supplied by the epoxy adhesive manufacturer. Do not use bulk epoxies. Drill and install anchorage reinforcement or anchor bolts to the embedment depth shown on the plans or the depth the manufacturer recommends, whichever is deeper. No additional payment will be made for providing embedment deeper than shown on the plans. Select an embedment depth capable of developing the yield strength of the steel anchor based on the product literature for the epoxy and steel anchor being used if no resistance or embedment depth is specified on the plans. Use 60 ksi as the yield strength for reinforcing steel.

3. CONSTRUCTION

Construct railing in accordance with details, alignment, and grade designated on the plans. Do not place railing until falsework or formwork, if any, for the span has been released unless otherwise directed. Adhere to the schedule restrictions for Placing Bridge Rails and Opening to Construction Traffic in Item 422, "Concrete Superstructures." Notify the Engineer after completion of the following steps and obtain approval of work before proceeding to the next step: placing rail reinforcement and pre-pour clear cover checks.

Ensure expansion joints in the railing will function properly before placing concrete.

Furnish either steel or aluminum, but not both, for the entire Contract if the plans allow either steel or aluminum options for a particular railing type.

Install epoxy adhesive anchorages in accordance with the manufacturer's instructions including hole size, drilling equipment and method, hole cleaning equipment and method, mixing and dispensing epoxy, and anchor insertion. Do not alter the manufacturer's mixing nozzle or dispenser. Anchorage bars or bolts must be clean and free of grease, oil, or any other foreign material. Demonstrate hole cleaning method to the Engineer for approval and continue the approved process for all anchorage locations. Do not weld to an anchor bar or anchor bolt that is anchored with epoxy adhesive. Do not expose rail to traffic until epoxy adhesive has obtained full cure in accordance with manufacturer's specifications.

3.1. **Metal Railing.**

3.1.1. **General.** Furnish metal beam rail elements in accordance with Item 540, "Metal Beam Guard Fence."

Fabricate and erect metal railing according to the pertinent provisions of Item 441, "Steel Structures," and the requirements of this Item.

Prepare and submit for approval the required shop or erection drawings in accordance with Item 441, "Steel Structures," when the plans require. Show all splice locations and details on the shop or erection drawings. Splice members only as provided on the plans.

Field-weld when required in accordance with Item 448, "Structural Field Welding."

3.1.2. **Fabrication.** Fabricate metal railing and post panels in sections conforming to the details shown on the plans and field-verified lines and grades. Fabricate adjacent sections so they will accurately engage each other in the field. Match-mark each pair of sections so they can be erected in the same position they were fabricated.

Fabricate metal rail elements included as part of the railing system to the dimensions and cross-sections shown on the plans and within a tolerance of 1/4 in. per 10 feet in the straightness of either edge. Joint and connect metal rail elements to the rail posts as shown on the plans, lapping metal rail elements in the direction of traffic in the adjacent lane. Bolts and nuts for metal railing should meet requirements of ASTM A307 and be galvanized in accordance with Item 445, "Galvanizing," unless otherwise shown on the plans.

Fabricate aluminum in accordance with AWS D1.2.

Heat aluminum materials other than castings to a temperature up to 400°F for no more than 30 min. to facilitate bending or straightening.

3.1.3. **Castings.** Provide permanent mold castings of the materials specified that are true to pattern in form and dimensions and of uniform quality and condition. Castings must be free from cracks and defects such as blowholes, porosity, hard-spots, or shrinkage that could affect their suitability for use. Repair minor defects in aluminum castings by an approved inert gas-welding process. Ensure finished castings are free of burrs, fins, discoloration, and mold marks and that they have a uniform appearance and texture.

Produce castings under radiographic control sufficient to establish and verify a product free from harmful internal defects. Heat-treat the entire lot of castings to the specified temper when required.

Permanently mark the heat or lot number on the web or top of the base of all castings. Furnish mill test reports showing the heat or lot number, chemical composition, tensile strength, elongation, and number of pieces for each casting heat or lot. For aluminum castings, a heat or lot should consist of at least 1,000 lb. of trimmed castings when produced from batch type furnaces, or 2,000 lb. when produced from a continuous furnace during a period of no more than 8 consecutive hours. Furnish the entire number of acceptable posts cast from each heat or lot except when a portion is required to complete a project.

3.1.4. **Corrosion Protection.** Galvanize all portions of steel railing after fabrication in accordance with Item 445, "Galvanizing," unless otherwise noted on the plans. Apply appearance coat to galvanized surface in accordance with Item 445, "Galvanizing," when shown on the plans. When painting is specified in place of galvanizing, shop paint steel in accordance with Item 441, "Steel Structures." Repair any damage to galvanized or painted surfaces after erection in accordance with Items 445, "Galvanizing," and Item 446, "Field Cleaning and Painting Steel," respectively.

Before final acceptance, clean surfaces of aluminum and galvanized steel railing not shown to be painted to remove extrusion marks, grease, dirt, and all other surface contaminants.

3.1.5. **Storage**. Store railing materials above the ground on platforms, skids, or other supports, and keep them free from grease, dirt, and contact with dissimilar metals. Avoid scratching, marring, denting, discoloring, or otherwise damaging the railing.

3.2. **Concrete Railing**. Provide concrete portions of railing in accordance with the requirements of Item 420, "Concrete Substructures," and Item 422, "Concrete Superstructures." Construct forms so the railing line and grade can be checked after the concrete has been placed but before initial set. Do not disturb the form alignment during finish floating of the railing tops. Exercise particular care in other construction to avoid disturbing or vibrating the span with the newly placed railing.

Provide precast members conforming to Item 424, "Precast Concrete Structural Members (Fabrication)."

Slipform construction of railing is permitted unless otherwise shown on the plans. Demonstrate slipforming method showing line and grade of concrete surfaces can be consistently obtained and clear cover outside reinforcing steel be maintained at all times. Stop slipforming railing if specified concrete clear cover is not obtained or appearance of rail is off line and grade.

Do not slipform railing with cast-in-place anchor bolts unless noted otherwise.

Provide additional reinforcing as needed to prevent movement of the reinforcement cage. Clear cover and epoxy coating requirements for additional reinforcement are the same as shown for the rail reinforcement. The rail reinforcing cage may be tack welded to the rail anchorage reinforcement provided the rail and anchorage reinforcement are not epoxy coated and weld locations measured along the rail are no closer than 3 ft. Tie all bar intersections if epoxy coated reinforcement is required for the railing proposed to be slipformed. Provide a wire line to maintain vertical and horizontal alignment of the slipform machine. Attach a grade line gauge or pointer to the machine so a continuous comparison can be made between the rail being placed and the established grade line. Rails or supports at the required grade are allowed instead of sensor controls. Make one or more passes with the slipform over the rail segment to ensure proper operation and maintenance of grades and clearances before placing concrete. Provide slipformed rail within a vertical and horizontal alignment tolerance of ±1/4 in. per 10 feet. Construct rail with a smooth and uniform appearance. Consolidate concrete so it is free of honeycomb. Provide concrete with a consistency that will maintain the shape of the rail without support. Minimize starting and stopping of the slipform operation by ensuring a continuous supply of concrete.

Do not exceed the manufacturer's recommended speed for the slipform machine. Stop slipforming and take remedial action if slipforming causes movement of the reinforcement such that plan clearances are not achieved. Remove and replace unsatisfactory slipformed rail at the Contractor's expense.

3.3. **Tests**. The Engineer will sample cast aluminum posts for testing in accordance with Tex-731-I to verify the material requirements of Item 442, "Metal for Structures." Metal beam rail elements may be sampled in accordance with Tex-713-I. The Engineer may sample bolts and nuts in accordance with Tex-708-I for galvanized coating testing.

The Engineer will select 3 anchor bars or bolts from the first day's production to be tested after the epoxy has cured. Test the bars or bolts in the presence of the Engineer in accordance with ASTM E1512, using a restrained test, to evaluate the epoxy adhesive's bond strength. Verify the anchor bars or bolts develop the required pullout resistance on the plans or 75% of the yield strength of the bars or bolts, whichever is less, without a bond failure of the epoxy. The Engineer may require additional tests during production. Perform corrective measures to provide adequate capacity if any of the tests do not meet the required test load. Repair damage from testing.

4. MEASUREMENT

This Item will be measured by the foot.

This is a plans quantity measurement Item. The quantity to be paid for is the quantity shown in the proposal except as modified by Article 9.2., "Plans Quantity Measurement." Additional measurements or calculations will be made if adjustments of quantities are required.

5. PAYMENT

The work performed and materials furnished in accordance with this Item and measured as provided under "Measurement" will be paid for at the unit price bid for "Railing" of the type specified. This price will be full compensation for furnishing, preparing, and placing concrete, expansion joint material, reinforcing steel, structural steel, aluminum, cast steel, pipe, anchor bolts or bars, testing of epoxy anchors, and all other materials required in the finished railing; removal and disposal of salvageable materials; and hardware, paint and painting of metal railing, galvanizing, equipment, labor, tools, and incidentals.

Special Specification 9007
Prefabricated Pedestrian Steel Truss Bridge Span

1. DESCRIPTION

Design, fabricate, and install prefabricated pedestrian steel truss bridge spans including bearing devices, anchor bolts, bridge deck, and pedestrian railings. This Item does not govern the design or construction of bridge substructure, including piers, abutments, and foundations.

2. MATERIALS

Provide materials that meet requirements of the following Items:

- Item 421, "Hydraulic Cement Concrete"
- Item 422, "Concrete Superstructures"
- Item 434, "Bridge Bearings"
- Item 440, "Reinforcement for Concrete"
- Item 441, "Steel Structures"
- Item 442, "Metal for Structures"
- Item 447, "Structural Bolting"
- Item 448, "Structural Field Welding"
- Item 449, "Anchor Bolts"
- Item 491, "Timber for Structures"

Paint, galvanize, or leave the steel truss surfaces exposed. When specified, galvanize as directed by Item 445, "Galvanizing." When painting, use Protection System II as directed by Item 446, "Field Cleaning and Painting Steel." Paint gray unless otherwise shown on the plans. Provide a Society for Protective Coatings SSPC SP6 cleaning for exposed weathering steel.

3. DESIGN

The Contractor is responsible for the structural adequacy of the prefabricated pedestrian steel truss bridge span design. Submit to the Engineer details and design calculations bearing the seal of a licensed professional engineer for review and approval. Include the steel truss span superstructure, bearing devices, anchor bolts, bridge deck, and bridge railing with accessibility handrails when required. Provide at least 28 calendar days notice before the start of fabrication. Design in compliance with the current AASHTO LRFD Guide Specifications for the Design of Pedestrian. The department will not grant additional time for rejection or correction of design submissions.

For the maintenance vehicle, use the current AASHTO LRFD Guide Specifications for the Design of Pedestrian Bridges.

Design railing as 42-in. pedestrian railing in accordance with the latest AASHTO requirements for pedestrian railing. Railing may be integral with through truss members provided it satisfies LRFD Specification requirements.

Design bridge deck surfaces to meet the requirements of Texas Accessibility Standards (TAS) Section 302, "Floor and Ground Surfaces."

When bridge deck grade is equal to or greater than 5%, provide accessible handrails meeting the requirements of the TAS Section 505, "Handrails."

4. FABRICATION

Fabricate the trusses, bearing devices, and other permanent metal components for the steel truss span in accordance with Item 441, "Steel Structures." Fabricators performing the work must be approved by the Department before producing the steel truss spans for department projects. A list of approved pedestrian steel truss bridge span fabricators is maintained by the Construction Division. Approval of the fabricator is based on the following:

- Obtaining certification by the American Institute of Steel Construction (AISC) Quality Certification Program as a fabrication shop for Major Steel Bridges (CBR),
- Obtaining an AISC Sophisticated Coatings Endorsement when painted bridges are specified,
- Demonstrating the ability to design and fabricate pedestrian steel truss bridge spans that provide quality workmanship, detailing, structural integrity, and satisfactory aesthetics, and
- Having readily available access to the services of a licensed professional engineer, experienced in the design of pedestrian steel truss bridge spans.

Prepare and submit detailed shop drawings for the steel truss span, bearing devices, bridge deck, deck joints, bridge railings, and accessibility handrails. Submit 6 complete copies of the shop drawings for review and approval. Give the Engineer at least 28 calendar days to review and approve each shop drawing submittal. Include unique drawings that illustrate specific portions of the work to be done. Clearly show all relevant design information such as member sizes and connections.

5. CONSTRUCTION

Erect the bridge and construct the deck in accordance with the following Items:

- Item 422, "Concrete Superstructures"
- Item 441, "Steel Structures"
- Item 491, "Timber for Structures"

Construct bridge deck surfaces that meet the requirements of TAS Section 302, "Floor and Ground Surfaces."

6. MEASUREMENT

This Item will be measured by each pedestrian truss bridge span in the completed and accepted final position.

7. PAYMENT

The work performed and materials furnished in accordance with this Item and measured under "Measurement" will be paid for at the unit price bid for "Prefabricated Pedestrian Steel Truss Bridge Span" of the length specified. This price is full compensation for design, fabrication, transport, erection, deck construction, and final finishing; and for equipment, labor, tools, and incidentals.