PROJECT MANUAL

CLEARWELL CONDITION ASSESSMENT AND REPLACEMENT OF SELECT VALVES AND ACTUATORS AT THE EAST WATER PURIFICATION PLANT (EWPP)

WBS No. S-000056-0070-4

VOLUME 1 of 1

Divisions 00 through 16

February 2016

Digitally signed by Sarah M. Berkey
Contact Info: Carollo Engineers, Inc.
Date: 2016.02.17 13:07:07-06'00'

STATE OF TEXAS
SARAH M. BERKEY
96651
LICENSED
PROFESSIONAL ENGINEER

TBPE F-882

Carollo Engineers, Inc.
10375 Richmond Ave., Suite 1625
Houston, Texas 77042
281.872.4512

CITY OF HOUSTON

CLEARWELL CONDITION ASSESSMENT AND REPLACEMENT OF SELECT VALVES AND ACTUATORS AT THE EAST WATER PURIFICATION PLANT (EWPP)

WBS No. S-000056-0070-4

Digitally signed by Sarah M. Berkey
Contact Info: Carollo Engineers, Inc.
Date: 2016.02.17 14:22:03-06'00'

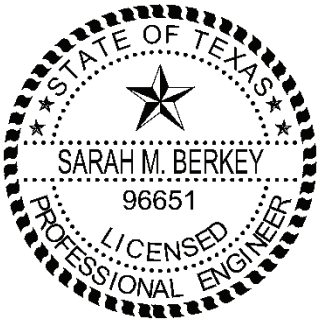

Digitally signed by Gary Sagehorn
Contact Info: Carollo Engineers, Inc.
Date: 2016.02.17 13:40:44-07'00'

GENERAL/PROCESS/MECHANICAL

00001 - COVER PAGE
00010 - TABLE OF CONTENTS
00015 - LIST OF DRAWINGS
00320 - GEOTECHNICAL INFORMATION
00410A BID FORM - PART A
00410B BID FORM - PART B
01110 - SUMMARY OF WORK
11292A - FLAP GATES
15121 - PIPE COUPLINGS
15076 - PIPE IDENTIFICATION
15061 - PIPE SUPPORTS

STRUCTURAL

02467A - DRILLED CONCRETE PIERS
03055 - ADHESIVE-BONDED REINFORCING BARS AND ALL THREAD RODS
03071 - EPOXIES
03072 - EPOXY RESIN/PORTLAND CEMENT BONDING AGENT
03102 - CONCRETE FORMWORK
03150 - CONCRETE ACCESSORIES
03154 - HYDROPHILIC RUBBER WATERSTOP
03200 - CONCRETE REINFORCING
03300 - CAST-IN-PLACE CONCRETE
03366 - TOOLED CONCRETE FINISHING
03600 - GROUTING
03921 - STRENGTHENING OF CONCRETE WITH EXTERNALLY BONDED FRP REINFORCEMENT
03922 - PREPACKAGED SMALL AGGREGATE REPAIR CONCRETE
03931 - EPOXY INJECTION SYSTEM
03933 - HYDROPHOBIC FOAM POLYURETHANE RESIN INJECTION SYSTEM
05120 - STRUCTURAL STEEL
05140 - STRUCTURAL ALUMINUM
05500 - METAL ASSEMBLIES
08412 - ALUMINUM STOREFRONTS
08800 - GLAZING

carollo

TBPE F-882

CITY OF HOUSTON

CLEARWELL CONDITION ASSESSMENT AND REPLACEMENT OF SELECT VALVES AND ACTUATORS AT THE EAST WATER PURIFICATION PLANT (EWPP)

WBS No. S-000056-0070-4

Electrical, Instrumentation and Controls

03800 Concrete Electrical Raceway Encasement
13120 Precast Segmental Concrete Building
13300-Process Instrumentation and Controls - General Provisions
13321 - Fiber Optic Cabling and Equipment
13441 SCADA Software Engineering Security and Quality Requirements
16010 Basic Electrical Requirements
16060 Electrical Demolition
16111 Conduit, Fittings and Bodies
16120 600-Volt Insulated Conductors
16123 Medium Voltage Power Cable
16126 Instrumentation Cable
16131 Device, Pull, Junction & Terminal Boxes
16140 Wiring Devices
16161 Panelboards
16170 Grounding and Bonding
16195 Electrical Identification
16210 Standby Diesel Engine Generator
16211 Generator Outdoor Weatherproof Enclosure
16213 Diesel Fuel Management System
16220 Automatic Transfer Switch
16402 Underground Duct Banks

16460 Transformers 600V and Less
16475 Overcurrent Protective Devices
16476 Disconnects and Circuit Breakers

KGI Kalluri Group, Inc.
Consulting Engineers & Project Managers
TBPE Registration No. F-665

10497 Town & Country Way, Suite 220
Houston, Texas 77024
Phone: (713)365-9288 • Fax: (713)365-0757

CITY OF HOUSTON

CLEARWELL CONDITION ASSESSMENT AND REPLACEMENT OF SELECT VALVES AND ACTUATORS AT THE EAST WATER PURIFICATION PLANT (EWPP)

WBS No. S-000056-0070-4

STATE OF TEXAS
FRANK L. STEPHENS
104104
LICENSED
PROFESSIONAL ENGINEER

2/19/2016
CIVIL ENGINEER

02101 Solids Removal, Loading, Transportation, and Disposal
11420 Peristaltic Metering Pumps
15067 Thermoplastic Process Pipe
15082 Insulation of Process Piping and Equipment
15102 Valves Smaller than Four-inch

KIT Professionals, Inc.
Engineers • Planners • Construction Managers
2000 W Sam Houston Parkway S Suite 1400, Houston, Texas 77042
Phone: (713) 783-8700 Fax: (713) 783-8747
TBPE Firm Registration No. F-4991
Challenging Challenges...

Document 00010

TABLE OF CONTENTS

NOTE: Bold capitalized Specification Sections are included in the City of Houston Department of Public Works and Engineering Standard Construction Specifications for Wastewater Collection Systems, Water Lines, Storm Drainage, Street Paving, and Traffic located here: **http://documents.publicworks.houstontx.gov/document-center/cat_view/88-engineering-and-construction/92-specifications/208-division-02-16-standard-specifications.html**; and are incorporated in Project Manuals by reference as if copied verbatim. Documents listed "for filing" are to be provided by Bidder and are not included in this Project Manual unless indicated for example only. The Document numbers and titles hold places for actual documents to be submitted by Contractor during Bid, post-bid, or construction phase of the Project. Specification Sections marked with an asterisk (*) are amended by a supplemental specification, printed on blue paper and placed in front of the Specification it amends. Documents in the 200, 300 and 400 series of Division 00, except for Document 00410B – Bid Form, Part B, are not part of the Contract.

Doc. No. **Document Title** **Doc. Date**

INTRODUCTORY INFORMATION

00010 Table of Contents 03-09-2016
00015 List of Drawings 02-01-2004

BIDDING REQUIREMENTS

INSTRUCTIONS TO BIDDERS

00200 Instructions to Bidders 08-01-2015
00210 Supplementary Instructions to Bidders 08-01-2015
00220 Request for Bid Information 06-11-2004

INFORMATION AVAILABLE TO BIDDERS
00320 Geotechnical Information 09-02-2005

BID FORMS AND SUPPLEMENTS
00410 Bid Form, Parts A & B 08-01-2015
00430 Bidder's Bond (For filing; Example Form) 02-01-2004
00450 Bidder's Statement of MWBE/PDBE/DBE/SBE Status 07-01-2013
00452 Contractor Submission List - Fair Campaign Ordinance 04-30-2004
00453 Bidder's Statement of Residency 02-01-2004
00454 Affidavit of Non-interest 02-01-2004
00455 Affidavit of Ownership or Control 09-04-2007
00457 Conflict of Interest Questionnaire 02-28-2006
00459 Contractor's Statement Regarding Previous Contracts

Doc. No.	Document Title	Doc. Date
	Subject to EEO	02-01-2004
00460	(POP-1) Pay or Play Acknowledgement Form	07-03-2012
00470	Bidder's MWSBE Participation Plan	08-01-2015
00471	Pre-bid Good Faith Efforts	08-01-2015
00472	Bidder's Goal Deviation Request	08-01-2015

POST-BID PROCEDURES

00495	Post-bid Procedures	03-09-2016

CONTRACTING REQUIREMENTS

AGREEMENT

00501	Resolution of Contractor	02-01-2010
00520	Agreement	07-01-2013
00570	Contractor's Revised MWSBE Participation Plan	08-01-2013
00571	Record of Post-Award Good Faith Efforts	08-01-2013
00572	Contractor's Request for Plan Deviation	08-01-2013

BONDS AND CERTIFICATES

00600	List of Proposed Subcontractors and Suppliers	07-01-2013
00601	Drug Policy Compliance Agreement	02-01-2004
00602	Contractor's Drug Free Workplace Policy (For filing)	
00604	History of OSHA Actions and List of On-the-job Injuries	02-01-2004
00605	List of Safety Impact Positions	02-01-2004
00606	Contractor's Certification of No Safety Impact Positions	02-01-2004
00610	Performance Bond	05-17-2005
00611	Statutory Payment Bond	05-17-2005
00612	One-year Maintenance Bond	05-17-2005
00620	Affidavit of Insurance (with attached Certificates of Insurance)	02-01-2004
00622	Name and Qualifications of Proposed Superintendent (For filing)	
00624	Affidavit of Compliance with Affirmative Action Program	02-01-2004
00630	(POP-2) Certification of Compliance with Pay or Play Program	07-03-2012
00631	(POP-3) City of Houston Pay or Play Program – List of Subcontractors	07-03-2012
00636	Certificate of Interested Parties	03-09-2016
00642	Monthly Subcontractor Payment Reporting Form	02-01-2010
00646	Payment Notification Explanation of Withholding	02-01-2010

GENERAL CONDITIONS

00700	General Conditions	08-15-2015

SUPPLEMENTARY CONDITIONS

00800	Supplementary Conditions	03-07-2016
00805	Equal Employment Opportunity Program Requirements	03-01-2016
00808	Requirements for the City of Houston Program for Minority, Women, and Small Business Enterprises (MWSBE), and	

Doc. No.	Document Title	Doc. Date
	Persons with Disabilities Business Enterprises (PDBE) Program	12-23-2015
00820	Wage Scale for Engineering Construction	02-01-2016
00821	Wage Scale for Building Construction	02-01-2016
00830	Trench Safety Geotechnical Information	02-01-2004
00840	Pay or Play Program Construction	07-03-2012

ADDENDA AND MODIFICATIONS

00931	Request for Information	02-01-2004

SPECIFICATIONS

DIVISION 1 – GENERAL REQUIREMENTS

01110	Summary of Work	06-27-2005
01145	Use of Premises	01-01-2011
01255	Change Order Procedures	08-01-2003
01270	Measurement and Payment	08-01-2003
01292	Schedule of Values	08-01-2003
01312	Coordination and Meetings	08-01-2003
01321	Construction Photographs	08-01-2003
01325	Construction Schedule	08-01-2003
01326	Construction Schedule (Bar Chart)	08-01-2003
01330	Submittal Procedures	08-01-2003
01340	Shop Drawings, Product Data, and Samples	08-01-2003
01351	Environmental Safety and Worker Protection	01-01-2011
01410	TPDES Requirements (with Attachments)	02-01-2011
01422	Reference Standards	08-01-2003
01450	Contractor's Quality Control	08-01-2003
01452	Inspection Services	08-01-2003
01454	Testing Laboratory Services	08-01-2003
01502	Mobilization	08-01-2008
01504	Temporary Facilities and Controls	01-01-2011
01506	Diversion Pumping	08-01-2003
01520	Temporary Field Office	02-08-2012
01560	Site Security	02-19-2016
01570	Storm Water Pollution Prevention Control	01-26-2012
01576	Waste Material Disposal	08-01-2003
01578	Control of Ground and Surface Water	01-01-2011
01580	Project Identification Signs	08-01-2003
01610	Basic Product Requirements	01-01-2011
01630	Product Substitution Procedures	08-01-2003
01650	Equipment Nomenclature, Data Identification And Data Input	02-19-2016
01725	Field Surveying	01-01-2011
01731	Cutting and Patching	01-01-2011

Doc. No.	Document Title	Doc. Date
01740	Site Restoration	08-01-2003
01755	Starting Systems	08-01-2003
01770	Closeout Procedures	08-01-2003
01782	Operations and Maintenance Data	08-01-2003
01785	Project Record Documents	08-01-2003

DIVISION 2 – SITE WORK

02081	**CAST-IN-PLACE CONCRETE MANHOLES**	**01-01-2011**
02082	**PRECAST CONCRETE MANHOLES**	**01-01-2011**
02084	**FRAMES, GRATES, RINGS, AND COVERS**	**08-01-2008**
02101	Solids Removal, Loading, Transportation, and Disposal	02-19-2016
02136	**WASTE MATERIAL HANDLING, TESTING AND DISPOSAL**	**01-01-2011**
02221	**REMOVING EXISTING PAVEMENTS AND STRUCTURES**	**07-01-2009**
02221S	***Removing Existing Pavements and Structures***	***10-24-2012***
02233	**CLEARING AND GRUBBING**	**01-01-2011**
02260	**TRENCH SAFETY SYSTEM**	**02-01-2011**
02315	**ROADWAY EXCAVATION**	**07-01-2009**
02316	**EXCAVATION AND BACKFILL FOR STRUCTURES**	**01-01-2011**
02317	**EXCAVATION AND BACKFILL FOR UTILITIES**	**01-01-2011**
02318	**EXTRA UNIT PRICE WORK FOR EXCAVATION AND BACKFILL**	**01-01-2011**
02319	**BORROW**	**01-01-2011**
02320	**UTILITY BACKFILL MATERIALS**	**01-01-2011**
02321	**CEMENT STABILIZED SAND**	**01-01-2011**
02322	**FLOWABLE FILL**	**08-01-2008**
02330	**EMBANKMENT**	**10-01-2002**
02336	**LIME-STABILIZED SUBGRADE**	**10-01-2002**
02337	**LIME/FLY-ASH STABILIZED SUBGRADE**	**10-01-2002**
02467A	Drilled Concrete Piers	02-19-2016
02501	**DUCTILE IRON PIPE AND FITTINGS**	**02-01-2011**
02502	**STEEL PIPE AND FITTINGS**	**01-01-2011**
02506	**POLYVINYL CHLORIDE PIPE**	**01-01-2011**
02511	**WATER LINES**	**01-01-2011**
02511S	***Water Lines***	***10-21-2013***
02514	**DISINFECTION OF WATER LINES**	**01-01-2011**
02515	**HYDROSTATIC TESTING OF PIPELINES**	**01-01-2011**
02527	**POLYURETHANE COATINGS ON STEEL OR DUCTILE IRON PIPE**	**10-01-2002**
02528	**POLYETHYLENE WRAP**	**01-01-2011**
02553	**POINT REPAIR AND OBSTRUCTION REMOVALS**	**01-01-2011**
02611	**REINFORCED CONCRETE PIPE**	**02-01-2011**
02612	**PRECAST REINFORCED CONCRETE BOX SEWERS**	**10-01-2002**
02621	**GEOTEXTILE**	**10-01-2002**
02631	**STORM SEWERS**	**01-26-2012**

Doc. No.	Document Title	Doc. Date
02632	**CAST-IN-PLACE INLETS, HEADWALLS, AND WINGWALLS**	**10-01-2002**
02712	**CEMENT STABILIZED BASE COURSE**	**10-01-2002**
02751	**CONCRETE PAVING**	**07-01-2009**
02752	**CONCRETE PAVEMENT JOINTS**	**10-01-2002**
02752S	***Concrete Pavement Joints***	***12-29-2009***
02753	**CONCRETE PAVEMENT CURING**	**10-01-2002**
02754	**CONCRETE DRIVEWAYS**	**09-01-2002**
02771	**CURB, CURB AND GUTTER, AND HEADERS**	**10-01-2002**
02775	**CONCRETE SIDEWALKS**	**10-01-2002**
02911	**TOPSOIL**	**10-01-2002**
02921	**HYDROMULCH SEEDING**	**01-01-2011**
02951	**PAVEMENT REPAIR AND RESTORATION**	**07-01-2009**

DIVISION 3 – CONCRETE

03055	Adhesive-Bonded Reinforcing Bars and All Thread Rods	02-19-2016
03071	Epoxies	02-19-2016
03072	Epoxy Resin/Portland Cement Bonding Agent	02-19-2016
03102	Concrete Formwork	02-19-2016
03150	Concrete Accessories	02-19-2016
03154	Hydrophilic Rubber Waterstop	02-19-2016
03200	Concrete Reinforcing	02-19-2016
03300	Cast-In-Place Concrete	02-19-2016
03315	**CONCRETE FOR UTILITY CONSTRUCTION**	**10-01-2002**
03366	Tooled Concrete Finishing	02-19-2016
03600	Grouting	02-19-2016
03800	Concrete Raceway Encasement	02-19-2016
03921	Strengthening of Concrete with Externally Bonded FRP Reinforcement	02-19-2016
03922	Prepackaged Small Aggregate Repair Concrete	02-19-2016
03931	Epoxy Injection System	02-19-2016
03933	Hydrophobic Foam Polyurethane Resin Injection System	02-19-2016

DIVISION 4 – MORTAR

DIVISION 5 – METALS

05120	Structural Steel	02-19-2016
05140	Structural Aluminum	02-19-2016
05500	Metal Assemblies	02-19-2016
05501	**METAL FABRICATIONS**	**01-01-2011**

DIVISION 6 – WOOD AND PLASTICS

DIVISION 7 – THERMAL AND MOISTURE PROTECTION

Doc. No.	Document Title	Doc. Date
DIVISION 8 – DOORS AND WINDOWS		
08412	Aluminum Storefronts	02-19-2016
08800	Glazing	02-19-2016
DIVISION 9 – FINISHES		
09901	**PROTECTIVE COATINGS**	**01-01-2011**
09901S	***Protective Coatings***	***05-19-2015***
DIVISION 10 – SPECIALTIES		
DIVISION 11 – EQUIPMENT		
11292A	Flap Gates	02-19-2016
11420	Peristaltic Metering Pumps	02-19-2016
DIVISION 12 – FURNISHINGS		
DIVISION 13 – SPECIAL CONSTRUCTION		
13120	Pre-Cast Segmental Concrete Building	02-19-2016
13300	Process Instrumentation and Controls - General Provisions	02-19-2016
13321	Fiber Optic Cabling and Equipment	02-19-2016
13441	SCADA Software Engineering Security and Quality Requirements	02-19-2016
DIVISION 14 – CONVEYING SYSTEMS		
DIVISION 15 – MECHANICAL		
15061	Pipe Supports	02-19-2016
15067	Thermoplastic Process Pipe	02-19-2016
15076	Pipe Identification	02-19-2016
15082	Insulation of Process Piping and Equipment	02-19-2016
15102	Process Valves Smaller than Four-inch Diameter	02-19-2016
15121	Pipe Couplings	02-19-2016
DIVISION 16 – ELECTRICAL		
16010	Basic Electrical Requirements	02-19-2016
16060	Electrical Demolition	02-19-2016
16111	Conduit, Fittings, and Bodies	02-19-2016
16120	600-Volt Insulated Conductors	02-19-2016
16123	Medium Voltage Power Cable	02-19-2016
16126	Instrumentation Cable	02-19-2016
16131	Device, Pull, Junction, and Terminal Boxes	02-19-2016
16140	Wiring Devices	02-19-2016
16161	Panelboards	02-19-2016
16170	Grounding and Bonding	02-19-2016

Doc. No.	Document Title	Doc. Date
16195	Electrical Identification	02-19-2016
16210	Standby Diesel Engine Generator	02-19-2016
16211	Generator Outdoor Weatherproof Enclosure	02-19-2016
16213	Diesel Fuel Management System	02-19-2016
16220	Automatic Transfer Switch	02-19-2016
16402	Underground Duct Banks	02-19-2016
16460	Transformers 600 Volts and Less	02-19-2016
16475	Overcurrent Protective Devices	02-19-2016
16476	Disconnects and Circuit Breakers	02-19-2016

END OF DOCUMENT

Document 00015

LIST OF DRAWINGS

Sheet No.	Sheet Designation	Sheet Title
1	G01	COVER SHEET
2	G02	DRAWING INDEX AND DESIGN CRITERIA
3	G03	NOTES AND LEGEND
4	G04	ABBREVIATIONS
5	G05	OVERALL SITE PLAN
6	G06	HYDRAULIC PROFILE
7	G07	STRUCTURAL NOTES
8	G08	MECHANICAL LEGEND
9	TS01	SURVEY CONTROL MAP (SHEET 1 OF 2)
10	TS02	SURVEY CONTROL MAP (SHEET 2 OF 2)
11	TS03	SURVEY CONTROL SWING TIES
12	C01	DEMOLITION PLAN
13	C02	SITE PLAN
14	C03	HORIZ. CONTROL PLAN (SHEET 1 OF 2)
15	C04	HORIZ. CONTROL PLAN (SHEET 2 OF 2)
16	C05	ROADWAY PLAN & PROFILE
17	C06	ROADWAY SECTIONS
18	C07	BOX STORM SEWER P&P @ STA 1+00 TO 6+00
19	C08	BOX STORM SEWER P&P @ STA 6+00 TO 8+28
20	C09	DETENTION BASIN PLAN
21	C10	DETENTION BASIN SECTIONS AND DETAILS
22	C11	DETENTION BASIN DETAILS
23	C12	STORM SEWER DETAILS (SHEET 1 OF 2)
24	C13	STORM SEWER DETAILS (SHEET 2 OF 2)
25	C14	STORM WATER POLLUTION PREVENTION (SHEET 1 OF 2)
26	C15	STORM WATER POLLUTION PREVENTION (SHEET 2 OF 2)
27	C16	ROADWAY DETAILS (SHEET 1 OF 3)
28	C17	ROADWAY DETAILS (SHEET 2 OF 3)
29	C18	ROADWAY DETAILS (SHEET 3 OF 3)
30	SM01	FILTER BUILDING & OVERFLOW STRUCTURE SITE PLAN
31	SM02	CLEARWELL SHEET 1 OF 5
32	SM03	CLEARWELL SHEET 2 OF 5

Sheet No.	Sheet Designation	Sheet Title
33	SM04	CLEARWELL SHEET 3 OF 5
34	SM05	CLEARWELL SHEET 4 OF 5
35	SM06	CLEARWELL SHEET 5 OF 5
36	SM07	APPROACH CHANNEL SHEET 1 OF 3
37	SM08	APPROACH CHANNEL SHEET 2 OF 3
38	SM09	APPROACH CHANNEL SHEET 3 OF 3
39	SM10	PIPE GALLERY SHEET 1 OF 6
40	SM11	PIPE GALLERY SHEET 2 OF 6
41	SM12	PIPE GALLERY SHEET 3 OF 6
42	SM13	PIPE GALLERY SHEET 4 OF 6
43	SM14	PIPE GALLERY SHEET 5 OF 6
44	SM15	PIPE GALLERY SHEET 6 OF 6
45	SM16	OVERFLOW STRUCTURE SHEET 1 OF 1
46	SM17	TYPICAL DETAILS SHEET 1 OF 6
47	SM18	TYPICAL DETAILS SHEET 2 OF 6
48	SM19	TYPICAL DETAILS SHEET 3 OF 6
49	SM20	TYPICAL DETAILS SHEET 4 OF 6
50	SM21	TYPICAL DETAILS SHEET 5 OF 6
51	SM22	TYPICAL DETAILS SHEET 6 OF 6
52	M01	SODIUM BISULFITE PUMP PLAN
53	M02	BACKWASH PUMP BYPASS DETAILS
54	E01	ELECTRICAL LEGEND ABBREVIATIONS AND SYMBOLS
55	E02	ELECTRICAL SITE PLAN
56	E03	PLANT 2 DEMOLITION PLAN SHEET 1 OF 2
57	E04	PLANT 2 DEMOLITION PLAN SHEET 2 OF 2
58	E05	PLANT 2 DEMOLITION SECTION
59	E06	PLANT 2 PROPOSED PLAN SHEET 1 OF 2
60	E07	PLANT 2 PROPOSED PLAN SHEET 2 OF 2
61	E08	PLANT 2 PROPOSED SECTION
62	E09	PLANT 2 PARTIAL PLAN SHEET 1 OF 5
63	E10	PLANT 2 PARTIAL PLAN SHEET 2 OF 5
64	E11	PLANT 2 PARTIAL PLAN SHEET 3 OF 5
65	E12	PLANT 2 PLAN SHEET 4 OF 5
66	E13	PLANT 2 PLAN SHEET 5 OF 5
67	E14	PROPOSED BISULFITE/ELECTRICAL BUILDING PLAN
68	E15	DIAGRAM AND SCHEDULES

Sheet No.	Sheet Designation	Sheet Title
69	E16	DIAGRAMS AND SCHEDULES
70	E17	DETAILS
71	E18	DETAILS
72	E19	DETAILS
73	E20	DETAILS

END OF DOCUMENT

Document 00200

TABLE OF CONTENTS

INSTRUCTIONS TO BIDDERS

PARA	TITLE	PAGE
1.0	*RELATED DOCUMENTS*	3
2.0	*DEFINITIONS*	3
3.0	*NOTICE TO BIDDERS*	3
4.0	*BID DOCUMENTS*	4
5.0	*EXAMINATION OF DOCUMENTS, SITE, AND LOCAL CONDITIONS*	4
6.0	*INTERPRETATIONS DURING BIDDING*	4
7.0	*ADDENDA*	4
8.0	*SUBSTITUTION OF PRODUCTS*	5
9.0	*PREPARATION OF BIDS*	5
10.0	*BID SUBMISSION*	5
11.0	*BID SECURITY*	5
12.0	*SUBCONTRACTORS AND SUPPLIERS*	6
13.0	*MODIFICATION OR WITHDRAWAL OF BID*	6
14.0	*BID DISQUALIFICATION*	6
15.0	*PREBID MEETING*	6
16.0	*OPENING OF BIDS*	6
17.0	*EVALUATION AND CONSIDERATION OF BIDS*	6
18.0	*ACCEPTANCE OF THE BID*	6

Document 00200

INSTRUCTIONS TO BIDDERS

1.0 *RELATED DOCUMENTS*

A. Document 00210 – Supplementary Instructions to Bidders.

B. Document 00320 – Geotechnical Information.

C. Document 00330 – Existing Conditions.

D. Document 00410 – Bid Form, Parts A & B.

E. Document 00495 – Post-Bid Procedures.

F. Document 00520 – Agreement.

G. Document 00700 – General Conditions.

H. Document 00800 – Supplementary Conditions.

2.0 *DEFINITIONS*

A. Definitions set forth in Document 00700 – General Conditions and in other documents of Project Manual, are applicable to Bid Documents.

B. *Addendum:* Written or graphic instrument issued prior to Bid opening, which clarifies, modifies, corrects, or changes Bid Documents.

C. *Alternate:* The total amount bid for additions to work, as described in Section 01110 – Summary of Work. Each Alternate includes cost of effects on adjacent or related components, and Bidder's overhead and profit.

D. *Bid:* A complete and properly signed offer to perform the Work in accordance with this Document and Document 00210 – Supplementary Instructions to Bidders.

E. *Bid Date:* Date and time set for receipt of Bids as stated in Document 00210 – Supplementary Instructions to Bidders, or as modified by Addenda.

F. *Bid Documents:* Project Manual, Drawings, and Addenda.

G. *Bid Supplement: A* Bid submittal that is required in Document 00410 – Bid Form.

H. *Bidder:* Person or firm, identified in Document 00410B – Bid Form – Part B, including its successors, and its authorized representative.

I. *Code:* Code of Ordinances, Houston, Texas.

J. *Low Bidder:* Apparent successful Bidder that qualifies as a responsible Bidder and that submits Bid with lowest Total Bid Price.

K. *Project Manager:* Person designated in Document 00100 – Advertisement for Bids and Document 00220 – Request for Bid Information to represent the City during bidding and post-bid periods.

L. *Project Manual:* Volume assembled for the Work that includes the bidding requirements, sample forms, Conditions of the Contract, and Specifications.

M. *Security Deposit:* A certified check, cashier's check, or bid bond in the amount of 10 percent of the Total Bid Price.

N. *Total Bid Price:* Total amount bid for performing the Work as identified by Bidder in Document 00410B – Bid Form – Part B, which amount includes:

1. Stipulated Price;
2. Total Base Unit Prices;
3. Total Extra Unit Prices;
4. Total Cash Allowances; and
5. Total Alternates.

3.0 *NOTICE TO BIDDERS*

A. The City of Houston Fair Campaign Ordinance makes it unlawful for a Contractor to offer any contribution to a candidate for City elective office (including elected officers and officers-elect) during a certain period of time prior to and following the award of the Contract by the City Council. The term "Contractor" includes proprietors of proprietorships, all partners of partnerships, and all officers, directors, and holders of 10 percent or more of the outstanding shares of corporations. A statement disclosing the names and business addresses of each of those persons will be required to be submitted with each bid or proposal; for a City Contract. Bidder shall complete and submit Document 00452 – Form A, Contractor Submission List, City of Houston Fair Campaign Ordinance, with its Bid to comply with this requirement. See Chapter 18 of the Code for further information.

B. Chapter 15, Article VIII, of the City's Code provides that no contract shall be let, nor any other business transaction entered into, by the City with any person indebted to the City or a qualifying entity, if the contractor or transaction comes within the provisions of Section 15-1 (c) of the Code. Exceptions are provided in Section 15-126 of the Code. Bidder shall complete and submit Document 00455 – Affidavit of Ownership or Control, with its Bid to comply with this requirement.

C. Neither bidder(s) nor any person acting on bidder(s)'s behalf shall attempt to influence the outcome of the award by the offer, presentation or promise of gratuities, favors, or anything of value to any appointed or elected official or employee of the City of Houston, their families or staff members. All inquiries regarding the solicitation are to be directed to the designated City Representative identified on the first page of the solicitation. Upon issuance of the solicitation through the pre-award phase and up to the date the City Secretary publicly posts notice of any City Council agenda containing the applicable award, aside from bidder's formal response to the solicitation, through the pre-award phase, written requests for clarification during the period officially designated for such purpose by the City Representative, neither bidder(s) nor persons acting on their behalf shall communicate with any appointed or elected official or employee of the City of Houston, their families or staff through written or oral means in an attempt to persuade or influence the outcome of the award or to obtain or deliver information intended to or which could reasonably result in an advantage to any bidder. However, nothing in this paragraph shall prevent a bidder from making public statements to the City Council convened for a regularly scheduled session after the official selection has been made and placed on the City Council agenda for action, or to a City Council committee convened to discuss a recommendation regarding the solicitation.

4.0 *BID DOCUMENTS*

A. The Bid Documents may be obtained at location specified in Document 00210 – Supplementary Instructions to Bidders.

B. The Bid Documents are made available only for the purpose of bidding on the Work. Receipt of Bid Documents does not grant a license for other purposes.

C. On receipt of Bid Documents, Bidder shall verify that documents are legible and complete, compare contents of Project Manual with Document 00010 – Table of Contents, and compare Index of Drawings with Document 00015 – List of Drawings. Bidder shall notify Project Manager if Bid Documents are incomplete.

D. If City of Houston Standard Specifications or Standard Details are required by the Project Manual, Bidder shall refer to Document 00210 – Supplementary Instructions to Bidders for purchase information.

5.0 *EXAMINATION OF DOCUMENTS, SITE, AND LOCAL CONDITIONS*

A. Bidder shall examine Project site, become familiar with local conditions under which the Work shall be performed, conduct appropriate investigations, and correlate personal observations with requirements of the Bid Documents before submitting a Bid.

B. Bidder shall make site investigations to the extent Bidder deems necessary to ascertain extent of subsurface conditions.

C. Failure of Bidder to perform the investigations prior to submitting a Bid does not relieve Bidder of responsibility for investigations, interpretations and proper use of available information in the preparation of its Bid.

D. Bidder shall observe limitations of access to occupied or restricted site as stated in Document 00210 – Supplementary Instructions to Bidders.

6.0 *INTERPRETATIONS DURING BIDDING*

A. Bidder shall immediately submit Document 00220 – Request for Bid Information to Project Manager upon finding errors, discrepancies, or omissions in Bid Documents. Confirmation of receipt of questions by the City is the responsibility of Bidder. Verbal discussions and answers are not binding.

B. Document 00220 – Request for Bid Information must be received at least 10 days before the Bid Date to allow issuance of Addenda in accordance with Paragraph 7.O.D. Replies, if issued, are by Addenda.

7.0 *ADDENDA*

A. Addenda that affect bidding requirements are applicable only during applicable only through issuance of the Notice to Proceed. Addenda that affect the Contract are a part of the Contract.

B. BIDDERS WHO SUBMIT A BID ON THIS PROJECT SHALL BE PRESUMED TO HAVE RECEIVED ALL ADDENDA AND TO HAVE INCLUDED ANY COST THEREOF IN THEIR BIDS, REGARDLESS OF WHETHER THEY ACKNOWLEDGE THE ADDENDA OR NOT.

C. The City will make Addenda available at same location where the Bid Documents may be obtained. The City will notify plan holders of record when Addenda are available. Bidders are responsible for obtaining Addenda after notification.

D. No Addendum will be issued later than noon on Monday before Bid Date, except Addenda with minor clarifications, withdrawing request for Bids, or postponing Bid Date.

8.0 *SUBSTITUTION OF PRODUCTS*

A. No substitutions of Products will be considered during the bidding period.

9.0 *PREPARATION OF BIDS*

A. Bidder shall fill in applicable blanks in Document 00410A&B – Bid Form – Parts A & B and Bid Supplements. In addition, Bidder shall bid all Alternates. Bidder shall properly sign Document 00410B -Bid Form.

B. Bidder shall initial all pages, except signature page, of Document 00410B – Bid Form – Part B.

C. Bidder is responsible for all costs incurred by the Bidder, associated with preparation of its Bid and compliance with Post-bid Procedures.

D. Bidder may not adjust preprinted price on line items stating "Fixed Unit Price" in the description on the Bid Form.

E. Bidder may increase, but not decrease, preprinted price on line items stating "Minimum Bid Price" in the description on the Bid Form by crossing out the minimum and inserting revised price on the line above. Bidder **may not** decrease the preprinted price on line items stating "Minimum Bid Price".

F. Bidder may decrease, but not increase, preprinted price on line items stating "Maximum Bid Price" in the description on the Bid Form by crossing out the maximum and inserting revised price on the line above. Bidder **may not** increase the preprinted price on line items stating "Maximum Bid Price".

G. Bidder shall insert a price no greater than the maximum preprinted range and no less than the preprinted range for line items stating "Fixed Range Unit Price" in the description on the Bid Form by crossing out prices noted and inserting revised price on the line above.

H. Bidder may not adjust Cash Allowance amounts.

10.0 *BID SUBMISSION*

A. City Secretary will receive Bids on Bid Date at location specified in Document 00210 – Supplementary Instructions to Bidders.

B. Bids submitted after Bid Date will be returned to Bidder unopened.

C. Verbal, facsimile, or electronic Bids are invalid and will not be considered.

D. Bidder shall submit in person or by mail one copy of the signed Document 00410 – Bid Form, Parts A and B, along with required Security Deposit, and required Bid Supplements, in a sealed, opaque envelope. In addition, Bidder shall clearly identify Project, Bid Date and Bidder's name on outside of envelope. If forwarded by mail, the sealed envelope containing the Bid must be enclosed in another envelope addressed for postal delivery.

11.0 *BID SECURITY*

A. Bidder shall submit a Security Deposit with its Bid.

B. Certified Check or Cashier's Check

1. Bidder shall make check payable to the City of Houston.

2. A check is submitted on the condition that if Bidder is named Low Bidder and fails either to timely and properly submit documents required in Document 00495 – Post-Bid Procedures, the City will cash the check in accordance with Paragraph 11.0.E.

C. Bid Bond

1. The bid bond must be a valid and enforceable bond, signed by a surety that complies with other requirements set out by law.

2. The bid bond must name the City of Houston as obligee, and be signed by the Bidder as principal and signed and sealed by the surety.

3. The bid bond must be conditioned such that if Bidder is named Low Bidder and then fails to timely and properly submit documents required in Document 00495 – Post-Bid Procedures, surety will be obligated to pay to the City an amount in accordance with Paragraph 11.0.E.

D. Security Deposits will be retained until after the Contract is awarded or all Bids are rejected.

E. Low Bidder forfeits Security Deposit if it fails to timely and properly submit documents required in Document 00495 – Post-Bid Procedures. The City may claim an amount equal to the difference between the Total Bid Price of the defaulting Bidder and the Total Bid Price of the Bidder awarded the Contract. If Security Deposit is a check, the City will reimburse any remaining balance to the defaulting Bidder.

12.0 *SUBCONTRACTORS AND SUPPLIERS*

A. The City may reject proposed Subcontractors or Suppliers.

B. Refer to Document 00800 – Supplementary Conditions, for MWBEPDBE, DBE and SBE goals.

13.0 *MODIFICATION OR WITHDRAWAL OF BID*

A. A Bidder may modify or withdraw a Bid submitted before the Bid Date by written notice to the City Secretary. The notice may not reveal the amount of the original Bid and must be signed by the Bidder.

B. Bidder may not modify or withdraw its Bid by verbal, facsimile, or electronic means.

C. A withdrawn Bid may be resubmitted up to the time designated for receipt of Bids.

14.0 *BID DISQUALIFICATION*

A. The City may disqualify a Bid if the Bidder:

1. fails to provide required Security Deposit in the proper amount;

2. improperly or illegibly completes information required by the Bid Documents;

3. fails to sign Bid or improperly signs Bid;

4. qualifies its Bid; or

5. improperly submits its Bid.

B. When requested, Low Bidder shall present satisfactory evidence that Bidder has regularly engaged in performing construction work as proposed, and has the capital, labor, equipment, and material to perform the Work.

15.0 *PREBID MEETING*

A. A prebid meeting is scheduled to be held at the place, time, and date listed in Document 00210 – Supplementary Instructions to Bidders.

B. All Bidders, subcontractors, and suppliers are invited to attend.

C. Representatives of City Engineer will attend.

16.0 *OPENING OF BIDS*

A. Bids are opened by the City Secretary and publicly read in City Council Chambers on the Public Level in City Hall Annex at 11:00 a.m. on Bid Date.

B. Place and date of Bid opening may be changed in accordance with Sections 15-3(b)(5) and 15-3(b)(6) of the City Code.

17.0 *EVALUATION AND CONSIDERATION OF BIDS*

A. Project Manager will tabulate, record and evaluate Bids.

B. The City may reject all Bids or may reject any defective Bid.

18.0 *ACCEPTANCE OF THE BID*

A. The City will send to Low Bidder Document 00498 – Notice of Intent to Award. Acceptance by the City is conditioned upon Bidder's timely and proper submittal of documents required in Document 00495 – Post-Bid Procedures.

B. The Bid remains open to acceptance and is irrevocable for the period of time stated in Document 00410A – Bid Form – Part A.

END OF DOCUMENT

Document 00210

SUPPLEMENTARY INSTRUCTIONS TO BIDDERS

The following Paragraphs modify Document 00200 - Instructions to Bidders. Where a portion of the Instructions to Bidders is modified or deleted by these Supplementary Instructions, the unaltered portions of the Instructions to Bidders remains in effect.

2.0 – DEFINITIONS: Add the following Paragraphs to this Section:

O. *Office of Business Opportunity (OBO):* All references to Affirmative Action Contract Compliance Division (AACC) set forth in Document 00700 – General Conditions and in other documents of the Project Manual, shall refer to, and include, the Office of Business Opportunity.

3.0 - NOTICE TO BIDDERS: Add the following Paragraph to this Section:

C. The City will award this contract to a "Local Business", as that term is defined in Section 15-176 of the City of Houston Code of Ordinances ("the Code"):

- If the bid of the Local Business is less than $100,000 and is the lowest responsible bid or is within 5% of the lowest bid received, or
- If the bid of the Local Business is more than $100,000 and is the lowest responsible bid or is within 3% of the lowest bid received, and
- Unless the Director determines that such an award would unduly interfere with contract needs, as provided in Section 15-181 of the Code.

If there is no bid of a Local Business that meets these criteria, the City will award the contract to the lowest responsible bidder.

4.0 – BID DOCUMENTS: Add the following Paragraphs to this Section:

A. Add the following Paragraph A.1:

1. Bid documents may only be obtained electronically at the City's website: http://bidsets.publicworks.houstontx.gov/.

D. Add the following Paragraph D.1:

1. Copies of the City Standard Specifications and Details may be acquired at no cost on the City's website **http://documents.publicworks.houstontx.gov/document-center/cat_view/88-engineering-and-construction/92-specifications/208-division-02-16-standard-specifications.html**

E. The following plan rooms, whose names, addresses, phone and fax numbers were last updated on April 9, 2007, have been authorized by the City to display Bid Documents for examination:
(Note: The Bid Documents furnished to the plan rooms for examination can be in electronic format, in hard copies, or in any other formats pertaining to each City Contracting Division's discretion.)

1. AMTEK Information Services, Inc., 4001 Sherwood Lane, Houston, TX 77092, 713-956-0100, Fax 713-956-5340, Email: planroom@amtekusa.com

2. Associated Builders & Contractors, Inc., (ABC), 3910 Kirby, Suite 131, Houston, TX 77098-4151, 713-523-6222, Fax 713-874-0747. Email: lori@abchouston.org

3. Associated General Contractors (AGC-BB) Building Branch, 3825 Dacoma, Houston, TX 77092-8717, 713-843-3700, Fax 713-843-3701. Email: karla.s@agchouston.org

4. Associated General Contractors, (AGC-HHUI), Highway, Heavy Utilities and Industrial Branch, 2400 Augusta St., Suite 180, Houston, TX 77057, 713-334-7100, Fax 713-334-7130. Email: houston@agctx.org (Attention: Mel Keyser)

5. Construction Information Network, 1225 North Loop West, Suite 550, Houston, TX 77008, 713-868-2233 ext. 329, Fax 866-852-2713. Email: paul.tilford@cnsx.com

6. F. W. Dodge Corporation, 4101 Greenbriar, Suite 320, Houston, TX 77098, 713-529-4895, Fax 713-524-7639. Email: terrie_harris@mcgraw-hill.com

7. Hispanic Contractors Association of Houston (HCA-GHA), 11 Parker Road, Suite 7, Houston, TX 77241, 713-699-2732 or 832-754-3705, Fax 713-695-1556, Email: hispanicontractorsassociation@yahoo.com; or Randymagdaleno@yahoo.com

8. Houston Minority Business Development Center, 2900 Woodridge, Suite 124, Houston, TX 77087, 713-644-0821, Fax 713-644-3523. Email: gtamez@gacompanies.com

9. Reed Construction Data, 30 Technology Parkway South, Suite 100, Norcross, GA – 30092-8629. Tel. 1-800-424-3996 or 1-800-699-8640; Fax 1-800-317-0870 or 1-800-508-5370.

10. The Builders' Exchange of Texas, Inc., 3910 Kirby, Suite 131, Houston, TX 77098, 210-564-6900, Fax: 210-564-6921, Email: houston@bxtx.com

F. Add the following Paragraph F.1:

1. **Designation as a City Business or Local Business**

To be designated as a City or Local Business for the purpose of the Hire Houston First Program, as set out in Article XI of Chapter 15 of the Houston City Code, a bidder or proposer must submit the Hire Houston First Application and Affidavit to the Director of the Mayor's Office of Business Opportunity (OBO) and receive notice that the designation has been approved prior to submission of a bid or proposal. Submit with your bid a valid official letter from OBO with your designation as a City or Local Business.

5.0 - EXAMINATION OF DOCUMENTS, SITE, AND LOCAL CONDITIONS: Insert the following paragraph:

A. Add the following Paragraph D.1:

1. Work will be performed in public right-of-way. The site may be examined at any time during daylight hours. Attend Pre-Bid for Information

9.0 – PREPARATION OF BIDS: Add the following Paragraph I to this Paragraph:

I. For math errors the City encounters in analyzing Bids, the following guidance will be used:

In the event of a conflict between:	The Bid Price is:
1. Individual Unit Price and Extension of that Unit Price	Individual Unit Price times Estimated Quantity
2. A Unit Price extension and total of Unit Price Extensions	Sum of all Individual Unit Price Extensions
3. Individual Alternate and total of Alternates	Sum of all Individual Alternates
4. Individual subtotals for Stipulated Price, Base Unit Prices, Extra Unit Prices, Contractor Bonus, Cash Allowances, and Alternates; and the Total Bid Price	Sum of Individual subtotals for Stipulated Price, Base Unit Prices, Extra Unit Prices, Contractor Bonus, Cash Allowances and Alternates

10.0 – BID SUBMISSION: Add the following Paragraph A.1 to this Section:

A. Add the following Paragraph A.1:

1. City Secretary will receive Bids at 900 Bagby, Room P101, Houston, Texas until 10:30 a.m., local time on April 14, 2016.

15.0 – PREBID MEETING: Add the following Paragraph A.1 to this Section:

A. Add the following Paragraph A.1:

1. A Prebid Meeting will be held at 10:00 A.M. on Monday, April 4, 2016 at Training Room Plant 1, EWPP, 2300 Federal Road, Houston, TX, 77015.

END OF DOCUMENT

Document 00220

REQUEST FOR BID INFORMATION

PROJECT: Clearwell Condition Assessment and Replacement of Select Valves and Actuators at the EWPP

PROJECT No.: WBS No. S-000056-0070-4

TO: John Msigwa, P.E.
15th Floor
611 Walker, Houston, Texas 77002

Phone No. (832) 395-2318
Fax No.
Email Addr. john.msigwa@houstontx.gov

(Type or Print question legibly; use back if more space is needed)

This request relates to _____ and/or _____
Drawing / Detail No. Specification Section No.

Attachments to this request: _____

Signature _____ Date _____

(Type or Print Name) _____

(Type or Print Company Name) _____

END OF DOCUMENT

Document 00320

GEOTECHNICAL INFORMATION

1. DOCUMENT INCLUDES

   A. Soils investigation reports.
   B. Bidder's responsibilities.

2. RELATED DOCUMENTS

   A. Section 02260 - Trench Safety Systems

3. SITE INVESTIGATION REPORTS

   A. In the design and preparation of Contract documents for this Project, the City and Design Consultant have used information in geotechnical reports for the investigation and analysis of soils and subsurface conditions at the Project site.

   B. An electronic copy of the report for this project is available for download from https://bidsets.publicworks.houstontx.gov/index.php/bid-sets

   C. Neither the City nor Design Consultant is responsible for accuracy or completeness of any information or data.

4. GEOTECHNICAL REPORTS

   A. Report No.: 1140209501 Prepared by (Firm Name): Geotest Engineering, Inc.; Title: GEOTECHNICAL REPORT; WBS NO. S-000056-0070-3; Report Date: 3/2016 No. of Pages: 24

5. BIDDER RESPONSIBILITIES

   A. Bidder shall take full responsibility for interpretation and use of information contained in above listed reports for its bidding and construction purposes.

   B. Bidder may perform additional soils investigations as Bidder deems appropriate.

END OF DOCUMENT

Document 00410A

BID FORM – PART A

To: **The Honorable Mayor and City Council of the City of Houston**
City Hall Annex
900 Bagby Street
Houston, Texas 77002

Project: Clearwell Condition Assessment and Replacement of Select Valves and Actuators at the EWPP

Project No.: WBS No. S-000056-0070-4

Bidder: _____

(Print or type full name of business entity, such as corporation, LLC, etc)

1.0 OFFER

A. Total Bid Price: Having examined the Project location and all matters referred to in Bid Documents for the Project, we, the undersigned, offer to enter into a Contract to perform the Work for the Total Bid Price shown on the signature page of this Document

B. Security Deposit: Included with the Bid is a Security Deposit in the amount of 10 percent of the Total Bid Price subject to terms described in Document 00200 – Instructions to Bidders.

C. Period for Bid Acceptance: This offer is open to acceptance and is irrevocable for 90 days from Bid Date. That period may be extended by mutual written agreement of the City and Bidder.

D. Addenda: All Addenda have been received. Modifications to Bid Documents have been considered and all related costs are included in the Total Bid Price.

E. Bid Supplements: The following documents are attached:

[X] Security Deposit *(as defined in Document 00200 – Instructions to Bidders)*
[X] Document 00450 - Bidder's Statement of MWSBE Status
[X] Document 00452 - Contractor's Submission List - Fair Campaign Ordinance Form A
[X] Document 00453 – Bidder's Statement of Residency *(not required for AIP funded project)*
[X] Document 00454 - Affidavit of Non-interest
[X] Document 00455 - Affidavit of Ownership or Control
[ ] Document 00456 - Bidder's Certificate of Compliance with Buy American Program *(required for AIP funded project)*
[X] Document 00457 – Conflicts of Interest Questionnaire (CIQ)
[ ] Document 00458 - Bidder's Certificate Regarding Foreign Trade Restriction *(required for AIP funded project)*
[ ] Document 00459 - Contractor's Statement Regarding Previous Contracts

Subject to EEO *(required for AIP funded project)*

[X] Document 00460 – Pay or Play Acknowledgement Form (POP 1-A)

[X] Document 00470 – Bidder's MWSBE Participation Plan *(required unless no MWSBE participation goal is provided in Document 00800* (the "Goal")*)*.

[X] Document 00471 – Bidder's Record of Good Faith Efforts *(required if the goal in Bidder's Participation Plan–Document 00470 is lower than the Goal).*

[X] Document 00472 – Bidder's Goal Deviation Request *(required if the goal in Bidder's Participation Plan–Document 00470 is lower than the Goal).*

[X] Others as listed: Valid official letter from OBO with your designation as a City or Local Business *(Bidder's Participation Hire Houston First)*

2.0 CONTRACT TIME

A. If offer is accepted, Contractor shall achieve Date of Substantial Completion within **615** calendar days after Date of Commencement of the Work, subject to adjustments of Contract Time as provided in the Contract.

DOCUMENT 00410B

BID FORM – PART B

1.0 TOTAL BID PRICE HAS BEEN CALCULATED BY BIDDER, USING THE FOLLOWING COMPONENT PRICES AND PROCESS (PRINT OR TYPE NUMERICAL AMOUNTS):

A. STIPULATED PRICE: **$_____**
(Total Bid Price; minus Base Unit Prices, Extra Unit Prices, Cash Allowances and All Alternates, if any)

B. BASE UNIT PRICE TABLE:

Item No.	Spec Ref.	Base Unit Short Title	Unit of Measure	Estimated Quantity	Unit Price (this column controls)	Total in figures
1	01502	Mobilization	LS	1	$200,000.00(1)	$200,000.00(1)
2	01555	Traffic Control	LS	1		
3	02260	Trench Safety System, Complete in Place	LF	5,000		
TOTAL BASE UNIT PRICES						**$_____**

C. EXTRA UNIT PRICE TABLE:

Item No.	Spec Ref.	Extra Unit Short Title	Unit of Measure	Estimated Quantity	Unit Price (this column controls)	Total in figures
4	02050	Remove Remnants of Concrete Foundations Not Identified on Drawings	CY	200	_____ [$50.00](2)	_____ [$10,000.00](2)
5	02101	Extra Solids Removal from Clearwell Cleaning Operations, Including Transportation and Disposal	Wet Ton	100	_____ [$150.00](2)	_____ [$15,000.00](2)
6	02136	Extra Waste Material Removal and Disposal	Ton	50	_____ [$180.00](2)	_____ [$9,000.00](2)
7	02221	Extra Roadway Demolition	SY	100	_____ [$100.00](2)	_____ [$10,000.00](2)
8	02318	Extra Hand Excavation and Backfill	CY	150	_____ [$100.00](2)	_____ [$15,000.00](2)

Bidder's Initials [ ]

Item No.	Spec Ref.	Extra Unit Short Title	Unit of Measure	Estimated Quantity	Unit Price (this column controls)	Total in figures
9	02318	Extra Small Machine Excavation and Backfill using 12"-24" Bucket Tractor/Backhoe or similar	CY	300	[$25.00](2)	[$7,500.00](2)
10	02318	Extra Large Machine Excavation and Backfill using D6-D8 Dozer or 11-22 CY Scraper or similar	CY	2,000	[$10.00](2)	[$20,000.00](2)
11	02318	Extra Select Backfill Material, Complete in Place	CY	100	[$20.00](2)	[$2,000.00](2)
12	02321	Extra Cement Stabilized Sand, Complete in Place	CY	100	[$50.00](2)	[$5,000.00](2)
13	02467A	Extra Depth for 18" Diameter Drilled Concrete Piers w/48" Bell, Complete in Place	VLF	30	[$150.00](2)	[$4,500.00](2)
14	02501	Extra Ductile Iron Pipe and Fittings, 4" Diameter, Buried, Complete in Place	LF	10	[$45.00](2)	[$450.00](2)
15	02501	Extra Ductile Iron Pipe and Fittings, 8" Diameter, Buried, Complete in Place	LF	10	[$80.00](2)	[$800.00](2)
16	02501	Extra Ductile Iron Pipe and Fittings, 16" Diameter, Buried, Complete in Place	LF	10	[$200.00](2)	[$2,000.00](2)
17	02501	Extra Ductile Iron Pipe, 36" Diameter, Above Grade, Including all Fittings, Bends and Supports, Complete in Place	LF	10	[$800.00](2)	[$8,000.00](2)
18	02506	Extra Polyvinyl Chloride Pipe and Fittings, 1" Diameter, Above Grade, Including all Fittings, Bends and Supports, Complete in Place	LF	10	[$15.00](2)	[$150.00](2)
19	02506	Extra Polyvinyl Chloride Pipe and Fittings, 4" Diameter, Above Grade, Including all Fittings, Bends and Supports, Complete in Place	LF	10	[$10.00](2)	[$100.00](2)
20	02506	Extra Polyvinyl Chloride Pipe and Fittings, 6" Diameter, Above Grade, Including all Fittings, Bends and Supports, Complete in Place	LF	10	[$50.00](2)	[$500.00](2)

Bidder's Initials [ ]

Item No.	Spec Ref.	Extra Unit Short Title	Unit of Measure	Estimated Quantity	Unit Price (this column controls)	Total in figures
21	02611	Extra Reinforced Concrete Pipe, 18" Diameter, Buried, Complete in Place	LF	10	[$400.00](2)	[$4,000.00](2)
22	02611	Extra Reinforced Concrete Pipe, 24" Diameter, Buried, Complete in Place	LF	10	[$600.00](2)	[$6,000.00](2)
23	02611	Extra Reinforced Concrete Pipe, 36" Diameter, Buried, Complete in Place	LF	10	[$800.00](2)	[$8,000.00](2)
24	02612	Extra Concrete Box Sewer, 10 FT x 3 FT, Complete in Place	LF	10	[$2,000.00](2)	[$20,000.00](2)
25	02612	Extra Concrete Box Sewer, 9 FT x 4 FT, Complete in Place	LF	50	[$1,800.00](2)	[$90,000.00](2)
26	02751	Extra Concrete Paving, Complete in Place	SY	200	[$70.00](2)	[$14,000.00](2)
27	02771	Extra Curb and Gutter - CIP Concrete, Complete in Place	LF	100	[$10.00](2)	[$1,000.00](2)
28	03300	Extra Concrete with Forms, Complete in Place	CY	100	[$350.00](2)	[$35,000.00](2)
29	03300	Extra Concrete w/o Forms, Complete in Place	CY	100	[$300.00](2)	[$30,000.00](2)
30	03300	Extra Concrete Repair, Complete in Place	SF	250	[$50.00](2)	[$12,500.00](2)
31	03600	Extra Concrete Grout, 1" Thick, Complete in Place	SF	150	[$17.00](2)	[$2,550.00](2)
32	03921	Extra GFRP Reinforcement, Single Layer, Complete in Place	SF	500	[$100.00](2)	[$50,000.00](2)
33	03931	Extra Epoxy Injection System, Complete in Place	LF	200	[$15.00](2)	[$3,000.00](2)
34	03933	Extra Hydrophilic Foam Polyurethane Resin Injection System, Complete in Place	LF	200	[$10.00](2)	[$2,000.00](2)
35	05120	Extra Structural Stainless Steel, Complete in Place	LB	100	[$20.00](2)	[$2,000.00](2)
36	05140	Extra Structural Aluminum, Complete in Place	LB	100	[$20.00](2)	[$2,000.00](2)
37	05500	Extra Aluminum Handrail, Complete in Place	LF	20	[$150.00](2)	[$3,000.00](2)
38	05500	Extra Aluminum Stair Treads, Complete in Place	RSR	4	[$500.00](2)	[$2,000.00](2)
39	05500	Extra Aluminum Grating, Complete in Place	SF	100	[$50.00](2)	[$5,000.00](2)

Bidder's Initials [ ]

Item No.	Spec Ref.	Extra Unit Short Title	Unit of Measure	Estimated Quantity	Unit Price (this column controls)	Total in figures
40	09901	Extra High Solids Epoxy Coating, Complete in Place	SF	250	_____ [$2.00](2)	_____ [$500.00](2)
41	13321	4 Strand Fiber Optic Cable Installed in Conduit, Complete in Place	LF	10,000	_____ [$2.10](2)	_____ [$21,000.00](2)
42	13321	6 Strand Fiber Optic Cable Installed in Conduit, Complete in Place	LF	6,000	_____ [$4.10](2)	_____ [$24,600.00](2)
43	13321	12 Strand Fiber Optic Cable Installed in Conduit, Complete in Place	LF	12,000	_____ [$8.10](2)	_____ [$97,200.00](2)
44	13321	36 Strand Fiber Optic Cable Installed in Conduit, Complete in Place	LF	2,000	_____ [$16.10](2)	_____ [$32,200.00](2)
45	16111	Extra 1" Rigid Aluminum Conduit Installed Above Ground, Complete in Place	LF	500	_____ [$10.50](2)	_____ [$5,250.00](2)
46	16111	Extra 1 1/2" Rigid Aluminum Conduit Installed Above Ground, Complete in Place	LF	200	_____ [$16.50](2)	_____ [$3,300.00](2)
47	16111	Extra 2" Rigid Aluminum Conduit Installed Above Ground, Complete in Place	LF	100	_____ [$21.50](2)	_____ [$2,150.00](2)
48	16120	Extra Copper No. 14 AWG Conductor with XHHW-2 Insulation, Complete in Place	LF	10,000	_____ [$0.75](2)	_____ [$7,500.00](2)
49	16120	Extra Copper No. 12 AWG Conductor with XHHW-2 Insulation, Complete in Place	LF	4,000	_____ [$0.92](2)	_____ [$3,680.00](2)
50	16120	Extra Copper No. 10 AWG Conductor with XHHW-2 Insulation, Complete in Place	LF	2,000	_____ [$1.14)(2)	_____ [$2,280.00](2)
51	16120	Extra Copper No. 6 AWG Conductor with XHHW-2 Insulation, Complete in Place	LF	2,000	_____ [$1.70](2)	_____ [$3,400.00](2)
52	16120	Extra Copper No. 4 AWG Conductor with XHHW-2 Insulation, Complete in Place	LF	1,000	_____ [$2.75](2)	_____ [$2,750.00](2)
53	16120	Extra Copper No. 1 AWG Conductor with XHHW-2 Insulation, Complete in Place	LF	1,000	_____ [$3.70](2)	_____ [$3,700.00](2)

Bidder's Initials [ ]

Item No.	Spec Ref.	Extra Unit Short Title	Unit of Measure	Estimated Quantity	Unit Price (this column controls)	Total in figures
54	16120	Extra Copper No. 1/0 AWG Conductor with XHHW-2 Insulation, Complete in Place	LF	1,000	_____ [$4.60](2)	_____ [$4,600.00](2)
55	16120	Extra Copper No. 3/0 AWG Conductor with XHHW-2 Insulation, Complete in Place	LF	1,000	_____ [$6.10](2)	_____ [$6,100.00](2)
56	16120	Extra 2/C or 3/C, #16 AWG Twisted Shielded Instrument Cable, Complete in Place	LF	5,000	_____ [$2.10](2)	_____ [$10,500.00](2)
57	16402	Extra 1" PVC Schedule 40 Conduit Installed in Underground Duct Bank, Complete in Place	LF	1,000	_____ [$2.60](2)	_____ [$2,600.00](2)
58	16402	Extra 1 1/2" PVC Schedule 40 Conduit Installed in Underground Duct Bank, Complete in Place	LF	1,000	_____ [$3.10](2)	_____ [$3,100.00](2)
59	16402	Extra 2" PVC Schedule 40 Conduit Installed in Underground Duct Bank, Complete in Place	LF	500	_____ [$3.90](2)	_____ [$1,950.00](2)
60	16402	Extra 4" PVC Schedule 40 Conduit Installed in Underground Duct Bank, Complete in Place	LF	500	_____ [$5.90](2)	_____ [$2,950.00](2)
61	16402	Extra Duct Bank Trenching, Rebar, Concrete Encasement and Backfill for Duct Banks with Top of Duct Maximum 48" Below Grade, Complete in Place	LF	200	_____ [$35.00](2)	_____ [$7,000.00](2)
62	16402	Extra 3' X 3' Precast Concrete Pull Box Installed as Detailed, Complete in Place	EA	6	_____ [$5,500.00](2)	_____ [$33,000.00](2)
63	16402	Extra 4' X 4' Precast Concrete Pull Box Installed as Detailed, Complete in Place	EA	2	_____ [$7,500.00](2)	_____ [$15,000.00](2)
64	01506	Additional Temporary By-Pass Provisions, Complete in Place. (5)	$	10,000	$10,000(1) X_____ Multiplier [$1.00](2)	_____ [$10,000.00](2)(5)

Bidder's Initials [ ]

Item No.	Spec Ref.	Extra Unit Short Title	Unit of Measure	Estimated Quantity	Unit Price (this column controls)	Total in figures
65	01578	Additional Dewatering, Complete in Place. (5)	$	25,000	$25,000(1) X_____ Multiplier [$1.00](2)	_____ [$25,000.00](2)(5)
66	02221	Additional Demolition (5)	$	10,000	$10,000(1) X_____ Multiplier [$1.00](2)	_____ [$10,000.00](2)(5)
67	02260	Additional Shoring and Protection, Complete in Place (5)	$	10,000	$10,000(1) X_____ Multiplier [$1.00](2)	_____ [$10,000.00](2)(5)
68	02317	Additional Utility Relocations, Complete in Place (5)	$	25,000	$25,000(1) X_____ Multiplier [$1.00](2)	_____ [$25,000.00](2)(5)
TOTAL EXTRA UNIT PRICES						**$778,360.00(2)**

D. CASH ALLOWANCE TABLE:

Item No.	Spec Ref.	Item Description	Unit of Measure	Estimated Quantity	Unit Price (this column controls)	Total (in figures)
69	N/A	City of Galena Park Permit	LS	1	$25,000.00(1)	$25,000.00(1)
TOTAL CASH ALLOWANCES						**$25,000.00(1)**

E. ALTERNATES TABLE: N/A

REST OF PAGE INTENTIONALLY LEFT BLANK

F. TOTAL BID PRICE: **$**_____
(Add Totals for Stipulated Price, Base Unit Price, Extra Unit Price, Cash Allowance, and All Alternates, if any)

2.0 SIGNATURES: By signing this Document, I agree that I have received and reviewed all Addenda and considered all costs associated with the Addenda in calculating the Total Bid Price.

Bidder: _____
(Print or type full name of your proprietorship, partnership, corporation, or joint venture.*)

** By: _____
Signature Date

Name: _____
(Print or type name) Title

Address: _____
(Mailing)

_____
(Street, if different)

Telephone and Fax Number: _____
(Print or type numbers)

* If Bid is a joint venture, add additional Bid Form signature sheets for each member of the joint venture.

** Bidder certifies that the only person or parties interested in this offer as principals are those named above. Bidder has not directly or indirectly entered into any agreement, participated in any collusion, or otherwise taken any action in restraint of free competitive bidding.

Note: This document constitutes a government record, as defined by § 37.01 of the Texas Penal Code. Submission of a false government record is punishable as provided in § 37.10 of the Texas Penal Code.

Footnotes for Tables B through E:
(1) Fixed Unit Price determined prior to Bid. Cannot be adjusted by the Bidder.
(2) Minimum Bid Price determined prior to Bid. Can be increased by the Bidder, but not decreased, by crossing out the Minimum and inserting revised price on the line above. **Cannot** be decreased by the Bidder.
(3) Maximum Bid Price determined prior to Bid. Can be decreased by the BIdder, but not increased, by crossing out the Maximum and inserting revised price on the line above. A Bid that increases the Maximum Bid Price may be found non-conforming and non-responsive. **Cannot** be increased by the Bidder.
(4) Fixed Range Bid Price determined prior to Bid. Unit Price can be adjusted by Bidder to any amount within the range defined by crossing out prices noted and noting revised price on the line above.
(5) Basis for payment to be invoice cost times the multiplier.

END OF DOCUMENT

Bidder's Initials [ ]

Document 00430

BIDDER'S BOND

THAT WE, _____, as Principal,
(Bidder)
("Bidder"), and the other subscriber hereto, _____, as Surety, do hereby acknowledge ourselves to be held and firmly bound to the City of Houston, a municipal corporation, in the sum of _____ Dollars ($_____) (an amount equal to 10 percent of the Total Bid Price, including Cash Allowances and Alternates, if any, for the payment of which sum, well and truly to be made to the City of Houston and its successors, the Bidder and Surety do bind themselves, their heirs, executors, administrators, successors, and assigns, jointly and severally.

THE CONDITIONS OF THIS OBLIGATION ARE SUCH THAT:

WHEREAS, the Bidder has submitted on or about this day a proposal offering to perform the following:

_____
(Project Name, Location and Number)
in accordance with the Drawings, Specifications, and terms and conditions related thereto to which reference is hereby made.

NOW, THEREFORE, if the Bidder's offer as stated in the Document 00410 – Bid Form is accepted by the City, and the Bidder executes and returns to the City Document 00520 – Agreement, required by the City, on the forms prepared by the City, for the Work and also executes and returns the same number of the Performance, Payment and Maintenance Bonds (such bonds to be executed by a Corporate Surety authorized by the State Board of Insurance to conduct insurance business in the State of Texas, and having an underwriting limitation in at least the amount of the bond) and other submittals as required by Document 00495 - Post-Bid Procedures, in connection with the Work, within the Contract Time, then this obligation shall become null and void; otherwise it is to remain in full force and effect.

If Bidder is unable to or fails to perform the obligations undertaken herein, the undersigned Bidder and Surety shall be liable to the City for the full amount of this obligation which is hereby acknowledged as the amount of damages which will be suffered by the City on account of the failure of such Bidder to perform such obligations, the actual amount of such damages being difficult to ascertain.

Notices required or permitted hereunder shall be in writing and shall be deemed delivered when actually received or, if earlier, on the third day following deposit in a United States Postal Service post office or receptacle, with proper postage affixed (certified mail, return receipt requested), addressed to the respective other Party at the address prescribed in the Contract documents, or at such other address as the receiving Party may hereafter prescribe by written notice to the sending Party.

IN WITNESS THEREOF, the Bidder and Surety have signed and sealed this instrument on the respective dates written below their signatures and have attached current Power of Attorney.

ATTEST, SEAL: (if a corporation)
WITNESS: (if not a corporation)

By: _____
Name:
Title:

ATTEST/SURETY WITNESS: (SEAL)

By: _____
Name:
Title:
Date:

_____
(Name of Bidder)

By: _____
Name:
Title:
Date:

_____
(Full Name of Surety)

_____
(Address of Surety for Notice)

_____

_____
(Telephone Number of Surety)

By: _____
Name:
Title:
Date:

END OF DOCUMENT

Document 00450

BIDDER'S STATEMENT OF MWBE/PDBE/DBE/SBE STATUS

This certifies that the status of the Bidder, _____, in
(Bidder's Name)
regard to the City of Houston Code of Ordinances, Chapter 15, Article V, relating to City-wide percentage goals for contracting with Minority and Women-owned Business Enterprises (MWBE) and Disadvantaged Business Enterprises (DBE), Chapter 15, Article VI, relating to City-wide percentage goals for contracting with Persons with Disabilities Business Enterprises (PDBE) and Chapter 15, Article IX, relating to City-wide percentage goals for contracting with a Small Business Enterprise (SBE) is as follows:

1. Bidder (individual, partnership, corporation) is [__] is not [__] a Minority Business Enterprise as certified by the Office of Business Opportunity.

2. Bidder (individual, partnership, corporation) is [__] is not [__] a Women-owned Business Enterprise as certified by the Office of Business Opportunity

3. Bidder (individual, partnership, corporation) does [__] does not [__] declare itself to be a Persons with Disabilities Business Enterprise as defined above.

4. Bidder (individual, partnership, corporation) does [__] does not [__] declare itself to be a Disadvantaged Business Enterprise as defined above.

5. Bidder (individual, partnership, corporation) does [__] does not [__] declare itself to be a Small Business Enterprise as defined above.

Signature: _____

Title: _____

Date: _____

END OF DOCUMENT

Document 00452
Form A
CONTRACTOR SUBMISSION LIST
CITY OF HOUSTON FAIR CAMPAIGN ORDINANCE

The City of Houston Fair Campaign Ordinance makes it unlawful for a Contractor to offer any contribution to a candidate for City elective office (including elected officers-elect) during a certain period of time prior to and following the award of the Contract by the City Council. The term "Contractor" includes proprietors of proprietorships, partners or joint venturers having an equity interest of 10 percent or more for the partnership or joint venture, and officers, directors and holders of 10 percent or more of the outstanding shares of corporations. Submission of a statement disclosing the names and business addresses of each of those persons is required with each Bid/Proposal for a City Contract. See Chapter 18 of the City of Houston Code of Ordinances for further information.

This list is submitted under the provisions of Section 18-36(b) of the City of Houston Code of Ordinances in connection with the attached Bid/Proposal of:

Firm or Company Name: _____
Firm or Company Address: _____
_____

The firm/company is organized as indicated below. Check one as applicable and attach additional pages if needed to supply the required names and addresses.

[ ] SOLE PROPRIETOR

Name _____ _____
Proprietor Address

[ ] A PARTNERSHIP

LIST EACH PARTNER HAVING EQUITY INTEREST OF 10% OR MORE OF PARTNERSHIP (IF NONE STATE "NONE")

Name _____ _____
Partner Address

Name _____ _____
Partner Address

[ ] A CORPORATION

LIST ALL DIRECTORS OF THE CORPORATION (IF NONE STATE "NONE")

Name _____ _____
Director Address

Name _____ _____
Director Address

Name _____ _____
Director Address

LIST ALL OFFICERS OF THE CORPORATION (IF NONE STATE "NONE")

Name _____ _____
Officer Address

Name _____ _____
Officer Address

Name _____ _____
Officer Address

LIST ALL INDIVIDUALS OWNING 10% OR MORE OF OUTSTANDING SHARES OF STOCK OF THE CORPORATION (IF NONE STATE "NONE")

Name _____ _____
Owner Address

Name _____ _____
Owner Address

Name _____ _____
Owner Address

I certify that I am duly authorized to submit this list on behalf of the firm, that I am associated with the firm in the capacity noted below, and that I have knowledge of the accuracy of the information provided herein.

_____
Signature

_____
Printed Name

_____
Title

Note: This list constitutes a government record as defined by § 37.01 of the Texas Penal Code.

END OF DOCUMENT

Document 00453

BIDDER'S STATEMENT OF RESIDENCY

The City may not award a contract for general construction, services, or purchases to a Nonresident Bidder unless Nonresident's Bid is lower than the lowest Bid submitted by a responsible Texas Resident Bidder by the same amount that a Texas Resident bidder would be required to underbid the Nonresident Bidder to obtain a comparable contract in the state in which Nonresident's principle place of business is located.

1. This certifies that the Bidder, _____, is a State of Texas Resident Bidder as defined in TEX. GOVT. CODE ANN. § 2252.001(4) (Vernon 1994).

   _____ _____
   Signature Title

   "Texas Resident Bidder" means a bidder whose principal place of business is in this State, and includes a Contractor whose ultimate parent company or majority owner has its principal place of business in this State. *When bidder cannot sign 1, above, proceed to 2.*

2. a. _____ is a resident of _____ and is a Nonresident Bidder as defined in TEX. GOVT. CODE ANN. § 2252.001(3) (Vernon 1994).

   _____ _____
   Signature Title

   "Nonresident Bidder" means a bidder whose principal place of business is not in this State, but excludes a contractor whose ultimate parent company or majority owner has its principal place of business in this State.

   b. The State of _____ _____ have a state statute giving
   Bidder's resident state Does or Does Not
   preference to resident bidders.

   _____ _____
   Signature Title

   If the answer to 2.b is that your state does have a statute giving preference to resident bidders, then you must provide a copy and proceed to 3.

3. A copy of the State of _____ statute is attached.

   _____ _____
   Signature Title

   _____
   Date

END OF DOCUMENT

Document 00454

AFFIDAVIT OF NON-INTEREST

BEFORE ME, the undersigned authority, a Notary Public in and for the State of Texas, on this day personally appeared _____, who
Affiant

being by me duly sworn on his oath stated that he is _____, of
Title

_____,
Name of Firm

the firm named and referred to and in the foregoing; and that he knows of no officer, agent, or employee of the City of Houston being in any manner interested either directly or indirectly in such Contract.

_____
Affiant's Signature

SWORN AND SUBSCRIBED before me on _____.
Date

_____
Notary Public in and for the State of TEXAS

_____
Print or type name

My Commission Expires: _____
Expiration Date

END OF DOCUMENT

Document 00455

AFFIDAVIT OF OWNERSHIP OR CONTROL

ORIG. DEPT.: DEPARTMENT OF PUBLIC WORKS AND ENGINEERING **FILE/I.D. NO.:** S-000056-0070-4

INSTRUCTION: ENTITIES USING AN ASSUMED NAME SHOULD DISCLOSE SUCH FACT TO AVOID REJECTION OF THE AFFIDAVIT. THE FOLLOWING FORMAT IS RECOMMENDED: CORPORATE/LEGAL NAME DBA ASSUMED NAME.

STATE OF _____ §
§ **AFFIDAVIT OF OWNERSHIP OR CONTROL**
COUNTY OF _____ §

BEFORE ME, the undersigned authority, on this day personally appeared _____ [*FULL NAME*] (hereafter "Affiant"), _____ [*STATE TITLE/CAPACITY WITH CONTRACTING ENTITY*] of _____ [*CONTRACTING ENTITY'S CORPORATE/LEGAL NAME*] ("Contracting Entity"), who being by me duly sworn on oath stated as follows:

1. Affiant is authorized to give this affidavit and has personal knowledge of the facts and matters herein stated.

2. Contracting Entity seeks to do business with the City in connection with _____ [*DESCRIBE PROJECT OR MATTER*] which is expected to be in an amount that exceeds $50,000.

3. The following information is submitted in connection with the proposal, submission or bid of Contracting Entity in connection with the above described project or matter.

4. Contracting Entity is organized as a business entity as noted below (check box as applicable).

FOR PROFIT ENTITY:

[ ] SOLE PROPRIETORSHIP
[ ] CORPORATION
[ ] PARTNERSHIP
[ ] LIMITED PARTNERSHIP
[ ] JOINT VENTURE
[ ] LIMITED LIABILITY COMPANY
[ ] OTHER (Specify type in space below)

_____

_____

_____

NON-PROFIT ENTITY:

[ ] NON-PROFIT CORPORATION
[ ] UNINCORPORATED ASSOCIATION

5. The information shown below is true and correct for the Contracting Entity and all owners of 5% or more of the Contracting Entity and, where the Contracting Entity is a non-profit entity, the required information has been shown for each officer, *i.e.*, president, vice-president, secretary, treasurer, etc. ***[NOTE: IN ALL CASES, USE FULL NAMES, LOCAL BUSINESS AND RESIDENCE ADDRESSES AND TELEPHONE NUMBERS. DO NOT USE POST OFFICE BOXES FOR ANY ADDRESS. INCLUSION OF E-MAIL ADDRESSES IS OPTIONAL, BUT RECOMMENDED. ATTACH ADDITIONAL SHEETS AS NEEDED.]***

Contracting Entity

Name: _____

Business Address *[NO./STREET]* _____

[CITY/STATE/ZIP CODE] _____

Telephone Number (_____)_____

Email Address *[OPTIONAL]* _____

Residence Address *[NO./STREET]* _____

[CITY/STATE/ZIP CODE] _____

Telephone Number (_____)_____

Email Address *[OPTIONAL]* _____

5% Owner(s) or More (IF NONE, STATE "NONE.")

Name: _____

Business Address *[NO./STREET]* _____

[CITY/STATE/ZIP CODE] _____

Telephone Number (_____)_____

Email Address *[OPTIONAL]* _____

Residence Address *[NO./STREET]* _____

[CITY/STATE/ZIP CODE] _____

Telephone Number (_____)_____

Email Address *[OPTIONAL]* _____

6. *Optional Information*

Contracting Entity and/or _____ [*NAME OF OWNER OR NON-PROFIT OFFICER*] is actively protesting, challenging or appealing the accuracy and/or amount of taxes levied against _____ [*CONTRACTING ENTITY, OWNER OR NON-PROFIT OFFICER*] as follows:

Name of Debtor: _____

Tax Account Nos. _____

Case or File Nos. _____

Attorney/Agent Name _____

Attorney/Agent Phone No. (_____)_____

Tax Years _____

Status of Appeal *[DESCRIBE]* _____

_____

_____

_____

Affiant certifies that he or she is duly authorized to submit the above information on behalf of the Contracting Entity, that Affiant is associated with the Contracting Entity in the capacity noted above and has personal knowledge of the accuracy of the information provided herein, and that the information provided herein is true and correct to the best of Affiant's knowledge and belief.

_____
Affiant

SWORN TO AND SUBSCRIBED before me this _____ day of _____, 20_____.

(Seal)

_____
Notary Public

NOTE:
This affidavit constitutes a **government record** as defined by Section 37.01 of the Texas Penal Code. Submission of a false government record is punishable as provided in Section 37.10 of the Texas Penal Code. Attach additional pages if needed to supply the required names and addresses.

END OF DOCUMENT

Document 00457

Conflict of Interest Questionnaire

****

Print out latest version of CIQ form from website listed below:

****

Local Government Code Chapter 176 requires Bidders with the City of Houston ("City") to file a Conflict of Interest Questionnaire with the City Secretary of the City of Houston.

The Conflict of Interest Questionnaire is available for downloading on the Texas Ethics Commission's website at: http://www.ethics.state.tx.us/forms/CIQ.pdf. The completed Conflict of Interest Questionnaire will be posted on the City Secretary's website. Also you will find a list of the City Local Government Officers on the City Secretary's website.

For your convenience the CIQ form is attached as part of this document. Although the City has provided this document for the Bidders convenience, it is the Bidders responsibility to submit the latest version of the CIQ form as promulgated by the Texas Ethics Commission.

The Failure of any Bidder to comply with this law is a Class C misdemeanor.

END OF DOCUMENT

CONFLICT OF INTEREST QUESTIONNAIRE

FORM CIQ

For vendor doing business with local governmental entity

This questionnaire reflects changes made to the law by H.B. 23, 84th Leg., Regular Session.

This questionnaire is being filed in accordance with Chapter 176, Local Government Code, by a vendor who has a business relationship as defined by Section 176.001(1-a) with a local governmental entity and the vendor meets requirements under Section 176.006(a).

By law this questionnaire must be filed with the records administrator of the local governmental entity not later than the 7th business day after the date the vendor becomes aware of facts that require the statement to be filed. *See* Section 176.006(a-1), Local Government Code.

A vendor commits an offense if the vendor knowingly violates Section 176.006, Local Government Code. An offense under this section is a misdemeanor.

OFFICE USE ONLY

Date Received

1 **Name of vendor who has a business relationship with local governmental entity.**

2 ☐ **Check this box if you are filing an update to a previously filed questionnaire.** (The law requires that you file an updated completed questionnaire with the appropriate filing authority not later than the 7th business day after the date on which you became aware that the originally filed questionnaire was incomplete or inaccurate.)

3 **Name of local government officer about whom the information is being disclosed.**

Name of Officer

4 **Describe each employment or other business relationship with the local government officer, or a family member of the officer, as described by Section 176.003(a)(2)(A). Also describe any family relationship with the local government officer. Complete subparts A and B for each employment or business relationship described. Attach additional pages to this Form CIQ as necessary.**

A. Is the local government officer or a family member of the officer receiving or likely to receive taxable income, other than investment income, from the vendor?

☐ Yes ☐ No

B. Is the vendor receiving or likely to receive taxable income, other than investment income, from or at the direction of the local government officer or a family member of the officer AND the taxable income is not received from the local governmental entity?

☐ Yes ☐ No

5 **Describe each employment or business relationship that the vendor named in Section 1 maintains with a corporation or other business entity with respect to which the local government officer serves as an officer or director, or holds an ownership interest of one percent or more.**

6 ☐ Check this box if the vendor has given the local government officer or a family member of the officer one or more gifts as described in Section 176.003(a)(2)(B), excluding gifts described in Section 176.003(a-1).

7

Signature of vendor doing business with the governmental entity

Date

Document 00459

CONTRACTOR'S STATEMENT REGARDING PREVIOUS CONTRACTS SUBJECT TO EQUAL EMPLOYMENT OPPORTUNITY

Section 60-1.7(b) of the Regulations of the Secretary of Labor requires each bidder or prospective prime contractor and proposed subcontractor, where appropriate, to state in the bid or at the outset of negotiations for the contract whether it has participated in any previous contract or subcontract subject to the equal opportunity clause; and if so, whether it has filed with the Joint Reporting Committee, the Director, an agency, or the former President's Committee on Equal Employment Opportunity all reports due under the applicable filing requirements. In any case in which a bidder or prospective prime contractor or proposed subcontractor which participated in a previous contract subject to Executive Order 10925, 11114. or 11246 has not filed a report due under the applicable filing documents, no contract or subcontract shall be awarded unless such contractor submits a report covering the delinquent period or such other period specified by the FAA or the Director, OFCCP.

Contractor has __ has not __ participated in a previous contract subject to the equal opportunity clause prescribed by Executive Order 10925, or Executive Order 11114, or Executive Order 11246.

Contractor has __ has not __ submitted all compliance reports in connection with any such contract due under the applicable filing requirements; and that representations indicating submission of required compliance reports signed by proposed subcontractors will be obtained prior to award of subcontracts.

If Contractor has participated in a previous contract subject to the equal opportunity clause and has not submitted compliance reports due under applicable filing requirements, Contractor (Proposer) shall submit a compliance report on Standard Form 100, "Employee Information Report EEO-1" prior to the award of the Contract.

Standard Form 100 is normally furnished to contractors annually, based on a mailing list currently maintained by the Joint Reporting Committee. In the event Contractor has not received the form, Contractor may obtain it by writing to the following address:

Joint Reporting Committee
1800 G Street
Washington, DC 20506

_____
(Printed or typed Name of Signatory)

_____ _____
Signature Date

_____
Title

_____
Contractor's Firm Name

NOTE: The penalty for making false statements in offers is prescribed in 18 U.S.C. 1001.

END OF DOCUMENT

Document 00460
(POP -1)
City of Houston
Pay or Play Program
Acknowledgement Form

It has been determined that the project currently open for bidding meets the criteria of the City of Houston Pay or Play program. This form acknowledges your awareness of the Pay or Play program which is authorized by Ordinance 2007-534. Your signature below affirms that you will comply with the requirements of the program if you are the successful bidder/proposer, and ensure the same on behalf of subcontracts subject to the Pay or Play Program.

I declare under penalty of perjury under the laws of the State of Texas that if awarded this contract which meets the criteria for the City of Houston's Pay or Play Program, I will comply with all requirements of the Pay or Play Program in accordance with Executive Order 1-7.

***Fill out all information below and submit this form with your bid/proposal packet.**

_____
Solicitation Number

_____ _____
Signature Date

_____ _____
Print Name City Vendor ID

_____ _____
Company Name Phone Number

_____
Email Address

Note: For more information contact your POP Liaison or the POP Contract Administrator. All contact information can be found on www.houstontx.gov →Departments→Office of Business Opportunity→Pay or Play.

Document 00470

BIDDER'S MWSBE PARTICIPATION PLAN

The Bidder or Proposer shall submit this completed form with the bid, to demonstrate the Bidder/Proposer's plan to meet the contract-specific MWSBE goal ("contract goal"). If the Bidder or Proposer cannot meet the contract goal, the Bidder/Proposer has the burden to demonstrate "Good Faith Efforts", which shall include correctly and accurately preparing and submitting this form, a Record of Good Faith Efforts (Document 00471), a Request for Deviation from the Goal (Document 00472), and providing supporting documentation evidencing their "Good Faith Efforts", as required by the City of Houston's Good Faith Efforts Policy (Document 00808). The City will review the Participation Plan and Good Faith Efforts at the time of bid opening. Visit http://www.houstontx.gov/obofor more information.

City Contract Goal	MBE 13%	WBE 7%	• MBE and WBE Goals are two separate Contract Goals. • Any excess of one Goal cannot be applied to meet another Goal. • An SBE can be applied to the MBE and/or WBE Goal, but not to exceed 4%.

NAICS Code (6 digit)	Description of Work (Plan Sheet #, Unit Price #, Scope of Work #, as applicable)	% of Total Bid Price (2 decimal places; for example, 5.00%)	Cert. Type for Goal: MBE, WBE, or SBE	Certified Firm Name Firm Address Contact Name Phone No. and E-Mail
			MBE ☐ WBE ☐ SBE ☐	
			MBE ☐ WBE ☐ SBE ☐	
			MBE ☐ WBE ☐ SBE ☐	
			MBE ☐ WBE ☐ SBE ☐	
			MBE ☐ WBE ☐ SBE ☐	
			MBE ☐ WBE ☐ SBE ☐	
			MBE ☐ WBE ☐ SBE ☐	

Bidder's Participation Plan Total	MBE	WBE	SBE

Signature for Company: _____*

Printed Name: _____

Company Name: _____

Phone #: _____

Date: _____

I understand that supplying inaccurate information may violate Texas Penal Code Section 37.10 and lead to City sanctions.

Document 00470
CONTINUATION PAGE

NAICS Code (6 digit)	Description of Work (Plan Sheet #, Unit Price #, Scope of Work #, as applicable)	% of Total Bid Price (2 decimal places; for example, 5.00%)	Cert. Type for Goal MBE, WBE, or SBE	Certified Firm Name Firm Address Contact Name Phone No. and E-Mail
			MBE ☐ WBE ☐ SBE ☐	
			MBE ☐ WBE ☐ SBE ☐	
			MBE ☐ WBE ☐ SBE ☐	
			MBE ☐ WBE ☐ SBE ☐	
			MBE ☐ WBE ☐ SBE ☐	
			MBE ☐ WBE ☐ SBE ☐	
			MBE ☐ WBE ☐ SBE ☐	
			MBE ☐ WBE ☐ SBE ☐	
			MBE ☐ WBE ☐ SBE ☐	
			MBE ☐ WBE ☐ SBE ☐	
			MBE ☐ WBE ☐ SBE ☐	
			MBE ☐ WBE ☐ SBE ☐	

Signature for Company: _____* Date: _____

Print Name/Company Name:_____ Phone: _____

I understand that supplying inaccurate information may violate Texas Penal Code Section 37.10 and lead to City sanctions.

Document 00471

PRE-BID GOOD FAITH EFFORTS

Bidder Name: _____ **Project Name**_____

A Bidder or Proposer that may be unable to complete or follow a Participation Plan (Document 00470) to meet the Contract Goal in the Supplemental Conditions (Document 00800), must submit this completed form, Goal Deviation Request Form (Document 00472), providing supporting documentation evidencing their "Good Faith Efforts", as required by the City of Houston's Good Faith Efforts Policy (see Document 00808).

The Bidder or Prime Contractor has the burden to demonstrate "Good Faith Efforts" to meet the MWSBE goal, which includes correctly and accurately preparing and submitting this form and other efforts described in the City's Good Faith Efforts Policy (Document 00808). The Office of Business Opportunity will review Good Faith Efforts and Participation Plan after selection of an apparent low bidder.

UNLESS THE BIDDER'S/PROPOSER'S PARTICIPATION PLAN MEETS THE CONTRACT GOAL, FAILURE TO SUBMIT THIS FORM MAY RESULT IN THE BID BEING FOUND NON-RESPONSIVE.

NAICS Code	Plan Item No.	MWSBE Type for Goal	Certified Firm Name Address, Phone No., and E-Mail	Certified Firm Contact Person	Methods of Contact	Prime Contact Dates	Certified Firm Response	Results of Contact (why suitable or not suitable for work)
		MBE ☐ WBE ☐ SBE ☐			Phone ☐ E-mail ☐ Fax ☐			
		MBE ☐ WBE ☐ SBE ☐			Phone ☐ E-mail ☐ Fax ☐			
		MBE ☐ WBE ☐ SBE ☐			Phone ☐ E-mail ☐ Fax ☐			
		MBE ☐ WBE ☐ SBE ☐			Phone ☐ E-mail ☐ Fax ☐			

Authorized Signature: _____ Date: _____ Phone: _____

Print Name: _____ Email Address: _____

Company Name: _____

CONTINUATION PAGE

NAICS Code	Plan Item No.	MWSBE Type for Goal	Certified Firm Name Address, Phone No., and E-Mail	Certified Firm Contact Person	Method of Contact	Prime Contact Dates	Certified Firm Respons e	Results of Contact (why suitable or not suitable for work)
		MBE ☐ WBE ☐ SBE ☐			Phone ☐ E-mail ☐ Fax ☐			
		MBE ☐ WBE ☐ SBE ☐			Phone ☐ E-mail ☐ Fax ☐			
		MBE ☐ WBE ☐ SBE ☐			Phone ☐ E-mail ☐ Fax ☐			
		MBE ☐ WBE ☐ SBE ☐			Phone ☐ E-mail ☐ Fax ☐			
		MBE ☐ WBE ☐ SBE ☐			Phone ☐ E-mail ☐ Fax ☐			
		MBE ☐ WBE ☐ SBE ☐			Phone ☐ E-mail ☐ Fax ☐			
		MBE ☐ WBE ☐ SBE ☐			Phone ☐ E-mail ☐ Fax ☐			

Authorized Signature: _____ Date: _____ Phone: _____

Print Name: _____ Email Address: _____

Company Name: _____

Document 00472
BIDDER'S MWSBE GOAL DEVIATION REQUEST

Company Name: _____

Project Name: _____

	MBE	WBE	Total
Department Approved Contract Goals	%	%	%

	MBE	WBE	SBE (Max 4% for Credit)	Total
Bidder's Proposed Participation Plan	%	%	%	%

Justification: Please provide the reason the Bidder is unable to meet the Contract Goal in Document 00800.

_____

_____

_____

Good Faith Efforts: Please list any efforts not listed in the Bidder's Pre-Bid Good Faith Effort (Document 00471) and provide supporting documentation evidencing "Good Faith Efforts", as required by the City of Houston's Good Faith Efforts Policy (Document 808).

_____

_____

_____

_____

Date: _____ Company Name: _____
Email: _____ Company Representative: _____
Phone Number: _____ Title: _____

FOR OFFICIAL USE ONLY: Approved [ ] Not Approved [ ]

OBO Representative _____ Date: _____

_____ Title: _____

Document 00495

POST-BID PROCEDURES

3.0 DOCUMENT ADDRESSES

A. Notice of Intent to Award

B. Monitoring Authority/Contracting Department

C. Requirements of Bidder

D. Failure of Bidder to comply with requirements

E. Notice to Proceed

4.0 NOTICE OF INTENT TO AWARD

A. The City will provide written Notice of Intent to Award to Low Bidder.

5.0 DEFINITIONS

A. The "Monitoring Authority" or "OBO" for this Project is:

Director, Office of Business Opportunity Division
City of Houston
611 Walker Street, 7th Floor
Houston, Texas 77002

B. The "Contracting Department" for this Project is:
Director, Department of DEPARTMENT OF PUBLIC WORKS AND ENGINEERING
City of Houston
611 Walker Street
Houston, Texas 77002
ATTN: **John Msigwa, P.E.,**

6.0 REQUIREMENTS OF BIDDER

A. Within 5 days of receipt of Notice of Intent to Award, Low Bidder shall execute and deliver to John Msigwa, P.E., Project Manager and Monitoring Authority, for the City's approval, documents indicated by an "X" below:
[ ] Document 00570 – Revised MWSBE Participation Plan *(Do not submit if OBO Director approved Bidder's Plan – Document 00470)*

[X] Executed Subcontract(s), Letter(s) of Intent, or documentation of good faith efforts to meet the MWSBE goals

B. Within 5 days of receipt of Notice of Intent to Award, Low Bidder shall execute and deliver to John Msigwa, P.E., Project Manager for the City's approval, documents indicated by an "X" below:

[ ] Document 00500 - Form of Business
[X] Document 00501 - Resolution of Contractor
[X] Document 00520 - Agreement
[X] Document 00600 - List of Proposed Subcontractors and Suppliers
[X] Document 00601 - Drug Policy Compliance Agreement
[X] Document 00602 - Contractor's Drug-free Workplace Policy *(Contractor creates this document.)*
[X] Document 00604 - History of OSHA Actions and List of On-the-job Injuries
[X] Document 00605 - List of Safety Impact Positions *(Contractor completes this list. Do not submit if submitting Document 00606.)*
[ ] Document 00606 - Contractor's Certification of No Safety Impact Positions *(Do not submit if submitting Document 00605.)*
[ ] Document 00607 - Certification Regarding Debarment, Suspension, and Other Responsibility Matters
[ ] Document 00608 - Contractor's Certification Regarding Non-segregated Facilities for Project Funded by AIP Grant
[X] Document 00610 - Performance Bond
[X] Document 00611 - Statutory Payment Bond
[X] Document 00612 - One-year Maintenance Bond
[ ] Document 00613 - One-year Surface Correction Bond
[X] Document 00620 - Affidavit of Insurance *(with Certificate of Insurance attached)*
[X] Document 00622 - Name and Qualifications of Proposed Superintendent *(Contractor creates this document.)*
[ ] Document 00623 - Contractor's Act of Assurance (SRF Form ED-103)
[X] Document 00624 - Affidavit of Compliance with S/WMBE Program
[ ] Document 00625 - SRF Participation Summary
[ ] Document 00626 - SRF Affirmative Steps Solicitation Report
[ ] Document 00627 - SRF Prime Contractor Affirmative Steps Certification and Goals
[ ] Document 00629 - Affidavit for FAA Form 7460-1
[X] Document 00630 - Certification of Compliance with Pay or Play Program
[X] Document 00631 - City of Houston Pay or Play Program – List of Subcontractors
[X] Document 00636 - Certificate of Interested Parties
[ ] Document 00809 – CDBG Requirements for Federally Funded Projects

C. Within 5 days of receipt of Notice of Intent to Award, Low Bidder shall execute the following forms and deliver them directly to the Monitoring Authority.

1. Original forms contained in Document 00805 – Equal Employment Opportunity Program Requirements:

[X] *Pages 00805-3 to 00805-5, Certification by Bidder Regarding Equal Employment Opportunity*
[X] *Page 00805-6, Total Work Force Composition of the Company, or copy of latest EEO-1 form (required only if Contractor has a work force of 50 or more people and the Original Contract Price is $50,000 or more)*
[X] *Page 00805-7, Equal Employment Opportunity Compliance Program*
[X] *Page 00805-26, Certification by Proposed Subcontractor Regarding Equal Employment Opportunity*
[X] *Page 00805-29, Certification by Proposed Material Supplier, Lessor, and Professional Service Providers Regarding Equal Employment Opportunity*

2. Original completed form Document 00633 - Certification by Proposed Material Suppliers, Lessors, and Professional Service Providers Regarding Equal Employment Opportunity, for each proposed material supplier and equipment supplier.

3. Original forms contained in Document 00820 – Wage Scale for Engineering Construction.
[X] *Certificate from Contractor Appointing Officer or Employee to Supervise Payment of Employees*
[ ] *Certificate from SubContractor Appointing Officer or Employee to Supervise Payment of Employees*
[ ] Document 00812, Exhibit "A" – Certificate from Contractor Appointing Officer or Employee to Supervise Payment of Employees

D. Designations of Subcontractors and Suppliers, who have been selected by Bidder in Document 00600 - List of Proposed Subcontractors and Suppliers, and accepted by the City, may be changed only with prior notice and acceptance by Project Manager as provided in Conditions of the Contract. For each Product Supplier subsequently added or substituted, provide an original completed form, Document 00633 - Certification by Proposed Material Suppliers, Lessors, and Professional Service Providers Regarding Equal Employment Opportunity, directly to the Monitoring Authority.

E. On Bidder's written request, John Msigwa, P.E., Project Manager may grant an extension of time, not to exceed 5 days, to furnish documents specified in Paragraphs 4.0.A and 4.0.B. If Bidder is required to resubmit documents specified in Paragraph 4.0.A or 4.0.B, Bidder shall do so within time limits provided in the request for resubmission.

F. Designations of Subcontractors and Suppliers, who have been selected by Bidder in its Participation Plan, and accepted by the City, may be changed only with prior notice and acceptance by the Monitoring Authority as provided in Document 00808 – Bidder/Contractor Requirements for the City of Houston Minority, Women, and Small Business Enterprise (MWSBE), and Persons with Disabilities Business Enterprise (PDBE).

5.0 FAILURE OF BIDDER TO COMPLY WITH REQUIREMENTS

A. Should Bidder, on receipt of Notice of Intent to Award, fail to comply with requirements of this Document 00495 within stated time, the City may declare award in default and require forfeiture of the Security Deposit.

B. After the City's written notice of default to Low Bidder, the City may award the Contract to Bidder whose offer is the next lowest bid, and Security Deposit of Bidder in default shall be forfeited to the City in accordance with provisions of Document 00200 - Instructions to Bidders.

6.0 NOTICE TO PROCEED

A. Upon the City's execution of the Agreement and delivery to Contractor, City Engineer will give Document 00551 - Notice to Proceed to Contractor, which establishes Date of Commencement of the Work.

END OF DOCUMENT

Document 00501

RESOLUTION OF CONTRACTOR

_____ ("Contractor"),
(Name of Contractor, e.g., "Biz. Inc.", "Biz LLP")

is a _____,
(Type of Organization, e.g.: Corporation, Limited Partnership, Limited Liability Partnership, Limited Liability Company, etc.)

which is bound by acts of _____,
(Name and Form of Governing Entity, e.g., "Biz Inc. Board of Directors", "Bill Smith, GP", etc.)

("Governing Entity").

On the _____ day of _____, 20__, the Governing Entity resolved, in accordance with all documents, rules, and laws applicable to the Contractor, that

_____, is authorized to act as the
(Contractor's Representative)

Contractor's Representative in all business transactions (initial one) ____ conducted in the State of Texas OR ____ related to this Contract; and

The Governing Entity warrants that the above resolution (a) was entered into without dissent or reservation by the Governing Entity, (b) has not been rescinded or amended, and (c) is now in full force and effect; and

In authentication of the adoption of this resolution, I subscribe my name on this day of _____, 20___.

_____ _____
(Authorized Signature for Governing Entity) (Print or Type Name and Title of Authorized Signatory)

SWORN AND SUBSCRIBED before me on _____
Date

_____
Notary Public in and for the State of Texas

My Commission Expires: _____ _____
Expiration Date Print or Type Name of Notary Public

Document 00520

AGREEMENT

Project: Clearwell Condition Assessment and Replacement of Select Valves and Actuators at the EWPP

Project Location: 2300 Federal Road, Houston, TX, 77015(Key Map No. 496 U, Y)

Project No: WBS No. S-000056-0070-4

The City: THE CITY OF HOUSTON, 900 Bagby Street, Houston, Texas 77002 (the "City")

and

Contractor: _____

(Address for Written Notice) _____

_____

Fax Number: _____ **Phone Number:** _____

City Engineer, with respect to Sections 4.3 thru 4.5 of the General Conditions, is:

J. Timothy Lincoln, P.E. (or his successor)

P. O. Box 1562, Houston, Texas 77251-1562 (Address for Written Notice)

City Engineer, with respect to all other terms of the General Conditions, is:

Joseph T. Myers, P.E. (or his successor)

Fax Number: (832) 395-2410

THE CITY AND CONTRACTOR AGREE AS FOLLOWS:

ARTICLE 1
THE WORK OF THE CONTRACT

1.1 Contractor shall perform the Work in accordance with the Contract.

ARTICLE 2
CONTRACT TIME

2.1 Contractor shall achieve Date of Substantial Completion within **410** days after Date of Commencement of the Work, subject to adjustments of Contract Time as provided in the Contract.

2.2 The Parties recognize that time is of the essence for this Agreement and that the City will suffer financial loss if the Work is not completed within the Contract Time. Parties also recognize delays, expense, and difficulties involved in proving in a legal or arbitration proceeding actual loss suffered by the City if the Work is not completed on time. Accordingly, instead of requiring any such proof, the Parties agree that as liquidated damages for delay (but not as a penalty), Contractor shall pay the City the amount stipulated in Document 00800 – Supplementary Conditions, for each day beyond Contract Time.

ARTICLE 3
CONTRACT PRICE

3.1 Subject to terms of the Contract, the City will pay Contractor in current funds for Contractor's performance of the Contract, Contract Price of $_____ which includes Alternates, if any, accepted below.

3.2 The City accepts Alternates as follows:

****
Delete or add lines below to indicate all Alternates that were included in Request for competative sealed proposals. Remove brackets and instructions when done. Change color of remaining text to black.
****

Alternate No. 1 ___[*Accepted or Not Accepted*]_____
Alternate No. 2 ___[*Accepted or Not Accepted*]_____
Alternate No. 3 ___[*Accepted or Not Accepted*]_____
Alternate No. 4 ___[*Accepted or Not Accepted*]_____

ARTICLE 4
PAYMENTS

4.1 The City will make progress payments to Contractor as provided below and in Conditions of the Contract.

4.2 The Period covered by each progress payment is one calendar month ending on the [___] 15th or [___] last day of the month.

4.3 The City will issue Certificates for Payment and will make progress payments on the basis of such Certificates as provided in Conditions of the Contract.

4.4 Final payment, constituting entire unpaid balance of Contract Price, will be made by the City to Contractor as provided in Conditions of the Contract.

ARTICLE 5
CONTRACTOR REPRESENTATIONS

5.1 Contractor represents:

5.1.1 Contractor has examined and carefully studied Contract documents and other related data identified in Request For or Competitive Sealed Proposals or Competitive Sealed Bids.

5.1.2 Contractor has visited the site and become familiar with and is satisfied as to general, local, and site conditions that may affect cost, progress, and performance of the Work.

5.1.3 Contractor is familiar with and is satisfied as to all federal, state, and local laws and regulations that may affect cost, progress, and performance of the Work.

5.1.4 Contractor has carefully studied all: (1) reports of explorations and tests of subsurface conditions at or contiguous to the site and all drawings of physical conditions in or relating to existing surface or subsurface

structures at or contiguous to the site (except Underground Facilities) which have been identified in Contract documents and (2) reports and drawings of a hazardous environmental condition, if any, at the site which has been identified in Contract documents.

5.1.5 Contractor has obtained and carefully studied (or assumes responsibility for having done so) all additional or supplementary examinations, investigations, explorations, tests, studies, and data concerning conditions (surface, subsurface, and Underground Facilities) at or contiguous to the site which may affect cost, progress, or performance of the Work or which relate to any aspect of the means, methods, techniques, sequences, and procedures of construction to be employed by Contractor, including applying specific means, methods, techniques, sequences, and procedures of construction, if any, expressly required by the Contract to be employed by Contractor, and safety precautions and programs incident thereto

5.1.6 Contractor does not consider that any further examinations, investigations, explorations, tests, studies, or data are necessary for performance of the Work at Contract Price, within Contract Time, and in accordance with the Contract.

5.1.7 Contractor is aware of general nature of work to be performed by the City and others at the site that relates to the Work as indicated in Contract documents.

5.1.8 Contractor has correlated information known to Contractor, information and observations obtained from visits to the site, reports and drawings identified in the Contract, and all additional examinations, investigations, explorations, tests, studies, and data with the Contract.

5.1.9 Contractor has given City Engineer written notice of all conflicts, errors, ambiguities, or discrepancies that Contractor has discovered in the Contract, and written resolution thereof by City Engineer is acceptable to Contractor.

5.1.10 Contract documents are generally sufficient to indicate and convey understanding of all terms and conditions for performance and furnishing of the Work.

ARTICLE 6
MISCELLANEOUS PROVISIONS

6.1 The Contract may be terminated by either Party as provided in Conditions of the Contract.

6.2 The Work may be suspended by the City as provided in Conditions of the Contract.

ARTICLE 7
ENUMERATION OF CONTRACT DOCUMENTS

7.1 The following documents are incorporated into this Agreement:

7.1.1 Document 00700 - General Conditions.

7.1.2 Document 00800 - Supplementary Conditions.

7.1.3 Division 01 - General Requirements.

7.1.4 Divisions 02 through 16 of Specifications.

7.1.5 Drawings listed in Document 00015 - List of Drawings. Drawing No. _____and bound separately.

7.1.6 Addenda [and Riders] which apply to the Contract, are as follows:

Addendum No. 1, dated None

Addendum No. 2, dated None

Addendum No. 3, dated None

Rider No. [___], dated None

7.1.7 Other documents:

	Document No.	Title
[X]	00410B	Bid Form – Part B
[X]	00470	Standard Pre-Bid Participation Plan Document
[ ]	00471	Pre-Bid Good Faith Efforts Report
[ ]	00472	Goal Deviation Request
[ ]	00500	Form of Business
[X]	00501	Resolution of Contractor (if a corporation)
[ ]	00570	Amended S/MWBE Participation Plan
[ ]	00571	Contractor's Good Faith Efforts Report
[ ]	00572	Plan Deviation Request
[ ]	00608	Contractor's Certification Regarding Non-Segregated Facilities for Project Funded by AIP Grant
[X]	00610	Performance Bond
[X]	00611	Statutory Payment Bond
[X]	00612	One-year Maintenance Bond
[ ]	00613	One-year Surface Correction Bond
[X]	00620	Affidavit of Insurance (with the Certificate of Insurance attached)
[ ]	00623	Contractor's Act of Assurance (SRF Form ED-103)
[X]	00624	Affidavit of Compliance with Affirmative Action Program
[ ]	00628	Affidavit of Compliance with Disadvantaged Business Enterprise (DBE) Program for Project Funded By AIP Grant
[X]	00630	(POP-2) Certification of Compliance with Pay or Play Program
[X]	00631	(POP-3) City of Houston Pay or Play Program – List of Subcontractors
[X]	00800	Supplementary Conditions for Project CIP or AIP Funded
[ ]	00801	Supplementary Conditions for Project AIP Funded
[ ]	00802	SRF Supplementary Conditions
[X]	00805	Equal Employment Opportunity Program Requirements
[ ]	00806	EPA DBE and Wage Rate Requirements (SRF only)
[ ]	00807	Bidder/Contractor Requirements for DBE Program
[X]	00808	Minority and Women-owned Business Enterprise (MWBE) & Persons with Disabilities Business Enterprise (PDBE) Program
[ ]	00810	Federal Wage Rate - Highway
[ ]	00811	Federal Wage Rate - Building
[ ]	00812	Federal Wage Rate - Heavy
[X]	00820	Wage Rate for Engineering Construction
[X]	00821	Wage Rate for Building Construction
[ ]	00830	Trench Safety Geotechnical Information
[X]	00840	Pay or Play Program
[ ]	00912	Rider

ARTICLE 8
SIGNATURES

8.1 This Agreement is executed in two original copies and is effective as of the date of countersignature by City Controller.

CONTRACTOR:

By: _____

Name: _____

Title: _____

Date: _____

Tax Identification Number: _____

(If Joint Venture)

By: _____

Name: _____

Title: _____

Date: _____

Tax Identification Number: _____

CITY OF HOUSTON, TEXAS

APPROVED:

By: _____
Director,
Department of Public Works and Engineering

SIGNED:

By: _____
Mayor

COUNTERSIGNED:

By: _____
City Controller

Date Countersigned:

_____

ATTEST/SEAL:

By: _____
City Secretary

8.2 This Contract and Ordinance have been reviewed as to form by the undersigned legal assistant and have been found to meet established Legal Department criteria. Legal Department has not reviewed the content of these documents.

_____
Legal Assistant

_____
Date

END OF DOCUMENT

Document 00570

CONTRACTOR'S REVISED MWSBE PARTICIPATION PLAN

As soon as the Contractor becomes aware that the Contractor may not abide by the most current approved Plan, the Contractor shall submit this completed form with a Record of Post-Bid Good Faith Efforts (Document 00571), a Request for Plan Deviation (Document 00572), and any other document evidencing "Good Faith Efforts", as required by the Good Faith Efforts Policy (Document 00808). The City will review this Revised Participation Plan and may approve this Revised Plan if the Contractor has made Good Faith Efforts. For more information, visit http://www.houstontx.gov/obo.

Original Participation Plan Percentage	MBE	WBE	SBE	Revised Participation Plan Percentage	MBE	WBE	SBE

NAICS Code (6 digit)	Description of Work (Plan Sheet #, Unit Price #, Scope of Work #, as applicable)	% of Total Bid Price (2 decimal places)	Cert. Type for Goal (MBE, WBE, SBE)	Certified Firm Name Firm Address Contact Name Phone No. and E-Mail (if available)

Signature for Company: _____* Date: _____
Print Name: _____ Phone: _____

*I understand that supplying inaccurate information may violate Texas Penal Code Section 37.10 and lead to City sanctions.

Document 00570

CONTINUATION PAGE

NAICS Code (6 digit)	Plan Item Number (if applicable)/ Description of Work	% of Total Bid Price (2 decimal places)	Cert. Type for Goal (MBE, WBE, SBE)	Certified Firm Name Firm Address Contact Name Phone No. and E-Mail (if available)

Signature for Company: _____* Date: _____
Print Name: _____ Phone: _____

*I understand that supplying inaccurate information may violate Texas Penal Code Section 37.10 and lead to City sanctions.

Document 00571

RECORD OF POST-AWARD GOOD FAITH EFFORTS

Contractor Name: _____ **Project Name:**_____

A Contractor that may be unable to follow an agreed Participation Plan (Document 00470 or 00570) must submit this completed form, a Plan Deviation Request Form (Document 00572), and any other documentation of "Good Faith Efforts" (see Document 00808) that the OBO Representative may require. The Contractor shall submit one completed Document 00571 (Part A) for each Certified Firm that is no longer performing part or all of its work duties under the Approved Plan. The Contractor has the burden to demonstrate "Good Faith Efforts" to meet the MWSBE goal, which includes correctly and accurately preparing and submitting this form and other efforts described in the Good Faith Efforts Policy (Document 00808). The Office of Business Opportunity may review Participation Plan and Good Faith Efforts from time to time and may request that the Contractor submit this form and other information.

UNLESS THE CONTRACTOR MEETS THE GOALS IN THE AGREED PARTICIPATION PLAN, FAILURE TO SUBMIT THIS FORM MAY RESULT IN A DEFAULT OF THE CONTRACT.

PART A (REASON FOR NON-USE OF CERTIFIED FIRM IN AGREED PLAN)

NAICS Code	Plan Item No.	MWSBE Type for Goal	Certified Firm Name, Address, Phone No. and E-mail	Plan Goal & Actual Use (in % of total)	Method of Contact	Reason for Non-Use (why the Contractor was not able to use the Certified Firm in accordance with the Agreed Plan)
				Plan %: ____ Actual %: ____	Phone ☐ E-mail ☐ Fax ☐	

PART B (REASON FOR NONUSE OF REPLACEMENT CERTIFIED FIRMS—IF APPLICABLE)

NAICS Code	Plan Item No.	MWSBE Type for Goal	Certified Firm Name Address, Phone No. and E-Mail	Certified Firm Contact Person	Method of Contact	Prime Contact Date	Certified Firm Response	Results of Contact (why Certified Firm was unsuitable or unusable)
					Phone ☐ E-mail ☐ Fax ☐			
					Phone ☐ E-mail ☐ Fax ☐			

Authorized Signature: _____ Date: _____ Phone: _____

Print Name: _____ Email Address: _____

Document 00571

PART B CONTINUATION (REASON FOR NONUSE OF REPLACEMENT CERTIFIED FIRMS)

NAICS Code	Plan Item No.	MWSBE Type for Goal	Certified Firm Name Address, Phone No. and E-Mail	Certified Firm Contact Person	Method of Contact	Prime Contact Date	Certified Firm Response	Results of Contact (why Certified Firm was unsuitable or unusable)
					Phone ☐ E-mail ☐ Fax ☐			
					Phone ☐ E-mail ☐ Fax ☐			
					Phone ☐ E-mail ☐ Fax ☐			
					Phone ☐ E-mail ☐ Fax ☐			
					Phone ☐ E-mail ☐ Fax ☐			
					Phone ☐ E-mail ☐ Fax ☐			
					Phone ☐ E-mail ☐ Fax ☐			
					Phone ☐ E-mail ☐ Fax ☐			

Authorized Signature: _____ Date: _____ Phone: _____

Print Name: _____ Email Address: _____

Document 00572

CONTRACTOR'S REQUEST FOR PLAN DEVIATION

Contractor Name:_____

Project Name:_____

	MBE	WBE	SBE	Total
Approved Participation Plan Percentages	%	%	%	%

	MBE	WBE	SBE	Total
Contractor's Requested Participation Plan	%	%	%	%

Justification: Please provide the reason the Contractor is unable to meet the MWSBE goal in the Approved Plan.

_____

_____

_____

Good Faith Efforts: Please list any efforts not listed in Contractor's Record of Good Faith Effort (Document 00571).

_____

_____

_____

_____

Please attach additional pages if the space for Justification or Good Faith Efforts is insufficient.

Date:_____ *Contractor:_____

E-mail: _____ *By:_____

Phone Number: _____ Title:_____

*I understand that the approval of this deviation request does not constitute a final decision by OBO that Contractor has used Good Faith Efforts in meeting the Contracting Goal.

FOR OFFICIAL USE ONLY: Approved ☐ Not Approved ☐

OBO Representative Date:_____

_____ Title: _____

Document 00600

LIST OF PROPOSED SUBCONTRACTORS AND SUPPLIERS

PROJECT NAME: Clearwell Condition Assessment and Replacement of Select Valves and Actuators at the EWPP
TOTAL DBE AWARD: $ _____
ORIG. CONTRACT PRICE: $ _____
PROJECT NO.: WBS No. S-000056-0070-4
DATE OF REPORT: _____

TOTAL MWSBE AWARD: $ _____
TOTAL HUB AWARD: $ _____
TOTAL PDBE AWARD: $ _____

NAICS (6 digits)	SUBCONTRACTOR OR SUPPLIER (INCLUDE "MWSBE", "PDBE", "DBE", OR "HUB" DESIGNATION)[2]	ADDRESS	SCOPE OF WORK[3]

NOTES:
1. RETURN FOR ALL PROJECTS AS REQUIRED IN DOCUMENT 00800– SUPPLEMENTARY CONDITIONS. RETURN WITHIN THE SPECIFIED NUMBER OF DAYS AFTER RECEIPT OF NOTICE OF INTENT TO AWARD
2. DESIGNATE FIRMS CERTIFIED BY THE CITY OFFICE OF BUSINESS OPPORTUNITY ON THIS FORM.
3. DESCRIBE THE WORK TO BE PERFORMED, FOR WHICH THE FIRM IS CERTIFIED, SUCH AS "PAVING", "ELECTRICAL", ETC.
4. **CONTRACTOR SHALL EXECUTE CONTRACTS WITH APPROVED SUBCONTRACTORS AND SUPPLIERS WITHIN 30 DAYS AFTER THE DATE OF THE NOTICE TO PROCEED. COPIES OF CONTRACTS WITH DESIGNNATED FIRMS MUST BE SENT TO THE OFFICE OF BUSINESS OPPORTUNITY.**

SIGNATURE: _____ COMPANY NAME: _____

NAME: _____ TITLE: _____
(Type or Print)

Document 00600

Continuation Page

PROJECT NAME: Clearwell Condition Assessment and Replacement of Select Valves and Actuators at the EWPP

DATE OF REPORT: _____

PROJECT NO.: WBS No. S-000056-0070-4

NAICS (6 digits)	SUBCONTRACTOR OR SUPPLIER (INCLUDE "MWSBE", "PDBE", "DBE", OR "HUB" DESIGNATION)[2]	ADDRESS	SCOPE OF WORK[3]

SIGNATURE: _____ COMPANY NAME: _____

NAME: _____ TITLE: _____
(Type or Print)

END OF DOCUMENT

Document 00601

DRUG POLICY COMPLIANCE AGREEMENT

I, _____ _____
Name Title

of _____
Contractor

have authority to bind Contractor with respect to its Bid, Proposal, or performance of any and all contracts it may enter into with the City of Houston; and that by making this Agreement, I affirm that Contractor is aware of and bythe time the Contract is awarded will be bound by and agree to designate appropriate safety impact positions for company employee positions, and to comply with the following requirements before the City issues a Notice to Proceed:

1. Develop and implement a written Drug Free Workplace Policy and related drug testing procedures for Contractor that meet the criteria and requirements established by the Mayor's Amended Policy on Drug Detection and Deterrence (Mayor's Drug Policy) and the Mayor's Drug Detection and Deterrence Procedures for Contractors (Executive Order No. 1-31).

2. Obtain a facility to collect urine samples consistent with Health and Human Services (HHS) guidelines and an HHS-certified drug-testing laboratory to perform drug tests.

3. Monitor and keep records of drug tests given and results; and upon request from the City of Houston, provide confirmation of such testing and results.

4. Submit semi-annual Drug Policy Compliance Declarations.

I affirm on behalf of Contractor that full compliance with the Mayor's Drug Policy and Executive Order No. 1-31 is a material condition of the Contract with the City of Houston,

I further acknowledge that falsification, failure to comply with or failure to timely submit declarations or documentation in compliance with the Mayor's Drug Policy or Executive Order No. 1-31 will be considered a breach of the Contract with the City and may result in nonaward or termination of the Contract by the City.

_____ _____
Contractor Title

_____ _____
Signature Date

END OF DOCUMENT

Document 00604

HISTORY OF OSHA ACTIONS AND LIST OF ON-THE-JOB INJURIES

Prior to award of the Contract, Low Bidder will be required to file the following with the City:

1. A history of all OSHA actions, advisories, etc., Contractor has received on all jobs worked in any capacity, prime or subcontractor. The history shall be for the two-year period preceding the Bid Date of the Project.

2. A list of all on-the-job injuries, accidents, and fatalities suffered by any present or former employees of Contractor during the same two-year period.

3. If less than the two-year period, give the date Contractor started doing business.

This information must be submitted to the City within the time period stated in Document 00498 - Notice of Intent to Award. An officer of the company must certify in a notarized statement that the information submitted is true and correct.

END OF DOCUMENT

Document 00605

LIST OF SAFETY IMPACT POSITIONS

****

Contractor is to provide a complete List of Employee Classifications that are considered in a "Safety Impact Position" and the number of employees in each of those classifications.

****

Employee Classification	**Number of Employees**

END OF DOCUMENT

Document 00606

CONTRACTOR'S CERTIFICATION OF
NO SAFETY IMPACT POSITIONS IN PERFORMANCE OF A CITY CONTRACT

BEFORE ME, the undersigned authority, on this day personally appeared

_____,
Affiant

who being by me duly sworn on his oath stated that he is _____
Title

of _____
Contractor

and that no employee safety impact positions, as defined in §5.17 of Executive Order No. 1-31, will be involved in performing _____.
Project

Contractor agrees and covenants that it shall immediately notify the City of Houston Director of Personnel if any safety impact positions are established to provide services in performing this City Contract.

_____
Affiant's Signature

SWORN AND SUBSCRIBED before me on this day of _____, 20___.

_____
Notary Public in and for the State of TEXAS

_____
Print or Type Notary Public Name

My Commission Expires: _____
Expiration Date

END OF DOCUMENT

Document 00610

PERFORMANCE BOND

THAT WE, _____, as Principal, (the "Contractor"), and the other subscriber hereto, _____, as Surety, do hereby acknowledge ourselves to be held and firmly bound to the City of Houston (the "City"), a municipal corporation, in the penal sum of $_____ for the payment of which sum, well and truly to be made to the City, its successors and assigns, Contractor and Surety do bind themselves, their heirs, executors, administrators, successors and assigns, jointly and severally.

THE CONDITIONS OF THIS OBLIGATION ARE SUCH THAT:

WHEREAS, the Contractor has on or about this day executed a Contract in writing with the City for _____
_____,
all of such work to be done as set out in full in said Contract documents therein referred to and adopted by the City Council, all of which are made a part of this instrument as fully and completely as if set out in full herein.

NOW THEREFORE, if the said Contractor shall faithfully and strictly perform the Contract in all its terms, provisions, and stipulations in accordance with its true meaning and effect, and in accordance with the Contract documents referred to therein and shall comply strictly with each and every provision of the Contract and with this Bond, then this obligation shall become null and void and shall have no further force and effect; otherwise the same is to remain in full force and effect. Should the Contractor fail to faithfully and strictly perform the Contract in all its terms, including but not limited to the indemnifications thereunder, the Surety shall be liable for all damages, losses, expenses and liabilities that the City may suffer in consequence thereof, as more fully set forth herein.

It is further understood and agreed that the Surety does hereby relieve the City or its representatives from the exercise of any diligence whatever in securing compliance on the part of the Contractor with the terms of the Contract, and the Surety agrees that it shall be bound to take notice of and shall be held to have knowledge of all acts or omissions of the Contractor in all matters pertaining to the Contract. The Surety understands and agrees that the provision in the Contract that the City will retain certain amounts due the Contractor until the expiration of 30 days from the acceptance of the Work is intended for the City's benefit, and the City will have the right to pay or withhold such retained amounts or any other amount owing under the Contract without changing or affecting the liability of the Surety hereon in any degree.

It is further expressly agreed by Surety that the City or its representatives are at liberty at any time, without notice to the Surety, to make any change in the Contract documents and in the Work to be done thereunder, as provided in the Contract, and in the terms and conditions thereof, or to make any change in, addition to, or deduction from the Work to be done thereunder; and that such changes, if made, shall not in any way vitiate the obligation in this Bond and undertaking or release the Surety therefrom.

It is further expressly agreed and understood that the Contractor and Surety will fully indemnify and save harmless the City from any liability, loss, cost, expense, or damage arising out of Contractor's performance of the Contract.

If the City gives Surety notice of Contractor's default, Surety shall, within 45 days, take one of the following actions:

1. Arrange for Contractor, with consent of the City, to perform and complete the Contract; or

2. Take over and assume completion of the Contract itself, through its agents or through independent contractors, and become entitled to the payment of the balance of the Contract Price.

If the Surety fails to take either of the actions set out above, it shall be deemed to have waived its right to perform and complete the Contract and receive payment of the balance of the Contract Price and the City shall be entitled to enforce any remedies available at law, including but not limited to completing the Contract itself and recovering any cost in excess of the Original Contract Price from the Surety.

This Bond and all obligations created hereunder shall be performable in Harris County, Texas. This Bond is given in compliance with the provisions of Chapter 2253, Texas Government Code, as amended, which is incorporated herein by this reference.

Notices required or permitted hereunder shall be in writing and shall be deemed delivered when actually received or, if earlier, on the third day following deposit in a United States Postal Service post office or receptacle, with proper postage affixed (certified mail, return receipt requested), addressed to the respective other Party at the address prescribed in the Contract documents, or at such other address as the receiving party may hereafter prescribe by written notice to the sending party.

IN WITNESS THEREOF, the said Contractor and Surety have signed and sealed this instrument on the respective dates written below their signatures and have attached current Power of Attorney.

ATTEST, SEAL: (if a corporation)
WITNESS: (if not a corporation)

_____
Name of Contractor

By: _____
Name:
Title:

By: _____
Name:
Title:
Date:

ATTEST/SURETY WITNESS:

(SEAL)

_____
Full Name of Surety

_____
Address of Surety for Notice

_____

_____
Telephone Number of Surety

By: _____
Name:
Title:
Date:

By: _____
Name:
Title: Attorney-in-Fact
Date:

This Ordinance or Contract has been reviewed as to form by the undersigned legal assistant and have been found to meet established Legal Department criteria. The Legal Department has not reviewed the content of these documents.

_____
Legal Assistant

_____
Date

END OF DOCUMENT

Document 00611

STATUTORY PAYMENT BOND

THAT WE, _____, as Principal, hereinafter called Contractor and the other subscriber hereto, _____, as Surety, do hereby acknowledge ourselves to be held and firmly bound unto the City of Houston, a municipal corporation, in the sum of $_____ for the payment of which sum, well and truly to be made to the City of Houston, and its successors, the said Contractor and Surety do bind themselves, their heirs, executors, administrators, successors, jointly and severally.

THE CONDITIONS OF THIS OBLIGATION ARE SUCH THAT:

WHEREAS, the Contractor has on or about this day executed a contract in writing with the City of Houston for _____
_____, all of such work to be done as set out in full in said Contract documents therein referred to and adopted by the City Council, all of which are made a part of this instrument as fully and completely as if set out in full herein;

NOW, THEREFORE, if the said Contractor shall pay all claimants supplying labor and materials to him or a Subcontractor in the prosecution of the Work provided for in the Contract, then, this obligation shall be void; otherwise the same is to remain in full force and effect;

PROVIDED HOWEVER, that this Bond is executed pursuant to the provisions of Chapter 2253, Texas Government Code, as amended, and all liabilities on this Bond shall be determined in accordance with the provisions of said Article to the same extent as if it were copied at length herein.

IN WITNESS THEREOF, the said Contractor and Surety have signed and sealed this instrument on the respective dates written below their signatures and have attached current Power of Attorney.

ATTEST, SEAL: (if a corporation)
WITNESS: (if not a corporation)

_____
Name of Contractor

By: _____
Name:
Title:

By: _____
Name:
Title:
Date:

ATTEST/SURETY WITNESS:

(SEAL)

_____
Full Name of Surety

_____
Address of Surety for Notice

_____

_____
Telephone Number of Surety

By: _____
Name:
Title:
Date:

By: _____
Name:
Title: Attorney-in-Fact
Date:

This Ordinance or Contract has been reviewed as to form by the undersigned legal assistant and have been found to meet established Legal Department criteria. The Legal Department has not reviewed the content of these documents.

_____
Legal Assistant

_____
Date

END OF DOCUMENT

Document 00612

ONE-YEAR MAINTENANCE BOND

THAT WE, _____, as Principal, hereinafter called Contractor, and the other subscriber hereto, _____, as Surety, do hereby acknowledge ourselves to be held and firmly bound to the City of Houston, a municipal corporation, in the sum of $_____, for the payment of which sum well and truly to be made to the City of Houston and its successors, the said Contractor and Surety do bind themselves, their heirs, executors, administrators, successors, jointly and severally.

THE CONDITIONS OF THIS OBLIGATION ARE SUCH THAT:

WHEREAS, the Contractor has on or about this day executed a Contract in writing with the City of Houston for _____
_____,
all of such work to be done as set out in full in said Contract documents therein referred to and adopted by the City Council, all of which are made a part of this instrument as fully and completely as if set out in full herein.

NOW THEREFORE, if the said Contractor shall comply with the provisions of Paragraph 11.5.1 of the General Conditions, and correct work not in accordance with the Contract documents discovered within the established one-year period, then this obligation shall become null and void, and shall be of no further force and effect; otherwise, the same is to remain in full force and effect.

Notices required or permitted hereunder shall be in writing and shall be deemed delivered when actually received or, if earlier, on the third day following deposit in a United States Postal Service post office or receptacle, with proper postage affixed (certified mail, return receipt requested), addressed to the respective other party at the address prescribed in the Contract documents, or at such other address as the receiving party may hereafter prescribe by written notice to the sending party.

IN WITNESS THEREOF, the said Contractor and Surety have signed and sealed this instrument on the respective dates written below their signatures and have attached current Power of Attorney.

ATTEST, SEAL: (if a corporation)
WITNESS: (if not a corporation)

_____
Name of Contractor

By: _____
Name:
Title:

By: _____
Name:
Title:
Date:

ATTEST/SURETY WITNESS:

(SEAL)

_____
Full Name of Surety

_____
Address of Surety for Notice

_____

_____
Telephone Number of Surety

By: _____
Name:
Title:
Date:

By: _____
Name:
Title: Attorney-in-Fact
Date:

This Ordinance or Contract has been reviewed as to form by the undersigned legal assistant and have been found to meet established Legal Department criteria. The Legal Department has not reviewed the content of these documents.

_____
Legal Assistant

_____
Date

END OF DOCUMENT

Document 00620

AFFIDAVIT OF INSURANCE

BEFORE ME, the undersigned authority, on this day personally appeared

_____, who
Affiant

being by me duly sworn on his oath stated that he is _____, of
Title

_____,
Contractor's Company Name

the Contractor named and referred to within the Contract documents; that he is fully competent and authorized to give this affidavit and that the attached original insurance certificate truly and accurately reflects the insurance coverage that is now available and will be available during the term of the Contract.

_____
Affiant's Signature

SWORN AND SUBSCRIBED before me on _____.
Date

_____
Notary Public in and for the State of TEXAS

_____
Print or type Notary Public name

My Commission Expires: _____
Expiration Date

END OF DOCUMENT

Document 00624

AFFIDAVIT OF COMPLIANCE WITH
AFFIRMATIVE ACTION PROGRAM

BEFORE ME, the undersigned authority, on this day personally appeared _____, who
Affiant

being by me duly sworn on his oath stated that he is _____,
Title

of _____,
Contractor

the Contractor named and referred to within the Contract documents; that he is fully competent and authorized to give this affidavit and that the Contract is in compliance with the Affirmative Action Program of the City and has done all that is required by the Contract documents, the Affirmative Action Program, and pursuant to Chapter 15, Code of Ordinances, City of Houston, §15.16 et seq.

_____
Affiant's Signature

SWORN AND SUBSCRIBED before me on this day of _____, 20__.

_____
Notary Public in and for the State of TEXAS

_____
Print or Type Notary Public Name

My Commission Expires: _____
Expiration

END OF DOCUMENT

Document 00630
(POP-2)
City of Houston
Certification of Compliance with
Pay or Play Program

Contractor Name: _____ $ _____
(Contractor/Subcontractor) *(Amount of Contract)*

Contractor Address: _____

Project No.: «WBSNo» _____

Project Name: «LegalPrjName» _____

POP Liaison Name: _____

In accordance with the City of Houston Pay or Play Program authorized by Ordinance 2007-534 and Executive Order 1-7, Contractor/Subcontractor agrees to abide by the terms of this Program. This certification is required of all contractors for contracts subject to the program. You must agree EITHER to PAY or to PLAY for all covered employees. The Contractor/Subcontractor may also Pay on behalf of some covered employees and Play on behalf of other covered employees.

The Contractor/Subcontractor will comply with all provisions of the Pay or Play Program and will furnish all information and reports requested to determine compliance with program requirements of the Pay or Play Program (See Executive Order 1-7 for the terms of the Pay or Play program) The criteria of the program is as follows:

The Contractor/Subcontractor agrees to **"Pay"** $1.00 per hour for work performed by covered employees under the contract with the City. If independent contract labor is utilized the Contractor/Subcontractor agrees to report hours worked by the independent contract laborer and pay $1.00 per hour for work performed.

Otherwise the Contractor/Subcontractor agrees to **"Play"** by providing health benefits to each covered employee. The health benefits must meet the following criteria:

1. The employer will contribute no less than $150 per employee per month toward the total premium cost for single coverage only; and
2. The employee contribution, if any amount, will be no greater than 50% of the total premium cost and no more than $150 per month.
3. Pursuant to E.O. 1-7 section 4.04 a contractor is deemed to have complied with respect to a covered employee who is not provided health benefits if the employee refuses the benefits and the employee's contribution to the premium is no more than $40 per month.

Please select whether you choose to:	Pay	Play	Both

The Contractor/Subcontractor will file compliance reports with the City, which will include activity for covered employees subject to the program, in the form and to the extent requested by the administering department. Compliance reports shall contain information including, but not limited to, documentation showing employee health coverage and employee work records.
Note: The Contractor is responsible to the City for the compliance of covered employees of covered subcontractors and only forms that are accurate and complete will be accepted.

*Estimated Number of:	Prime Contractor	Sub-Contractor
Total Employees on City Job		
Covered Employees		
Non-Covered Employees		
Exempt Employees		

***Required**

I hereby certify that the above information is true and correct.

_____ _____
Contractor *(Signature)* Date

_____
Name and Title *(Print or type)*

Document 00631
(POP-3)
City of Houston
Pay or Play Program
List of Subcontractors

Prime Contractor: _____ POP Contact Person: _____
Project Number/Description: _____ Address: _____
_____ Email: _____
Phone: _____

Note: Include ALL subcontractors (use additional form if necessary)

Subcontractor Name	Supplier Y/N?	Amount of Subcontract	Check One: Pay	Check One: Play	Check One: Both (Pay and Play)	Check One: N/A	Contact Person	Phone	Email Address	Mailing Address

*If the above information is found to be submitted fraudulently with the intent to bypass or deceive the purpose of the Pay or Play Program the contractor will be held liable for all compliance requirements from the inception of the contract. All subcontracts that surpass the $200,000.00 threshold will be responsible for Pay or Play compliance from the inception of the contract.

Affidavit

I hereby solemnly affirm, certify and confirm that the total sub-contract value stated above is the final value of the contract (*) including all material costs, fuel, payroll, taxes, fees, profit sharing, labor or any payments in relation to the contracted work and no separate payment or contract has been made for the sub-contract under contract no._____. The above sub-contract value includes all the costs related to work under the contract. The contractor and sub-contractor(s) agree to inform The Mayor's Office of Business Opportunity of any related cost(s) added to the contracted work and re-submit POP-3 with the current value of the sub-contract. I understand that compliance with "Pay or Play" program is mandatory and nothing has been hidden to circumvent the program requirements.

_____
Contractor Authorized Representative & Title Date
Name & Signature

Document 00636

CERTIFICATE OF INTERESTED PARTIES

In accordance with Texas Gov't Code §2252.908, the successful bidder must complete Form 1295, Certificate of Interested Parties. Form 1295 is available for downloading on the Texas Ethics Commission's (TEC) website: https://www.ethics.state.tx.us/forms/1295.pdf.

The successful bidder must use the application to enter the required information on Form 1295 and print a copy of the completed form, which will include a certification of filing that will contain a unique certification number.

No later than 30 days after the contract's effective date, the City will upload the successful bidder's completed Form 1295. The TEC will post the Contractor's completed Form 1295 within seven business days of receipt.

For your reference, Form 1295 is attached as part of this document.

END OF DOCUMENT

Document 00642

MONTHLY SUBCONTRACTOR PAYMENT REPORTING FORM

Legal Project Name:_____

Outline Agreement No.:_____ WBS No.:_____

Contractor's Company Name: _____

Address: _____

CERTIFICATION

_____, Contractor's Representative for the above referenced Contract, hereby certifies that (1) Contractor has paid all subcontractors, except those noted below, (2) Contractor made such payments (a) in proportion to the amount City paid Contractor and (b) in accordance and compliance with all applicable Contract Documents and laws; and (3) Contractor withheld no sums from any subcontractor for allegations of deficiency in Work. The term "subcontractor", as used herein, includes all persons or firms furnishing work, materials, services or equipment Contractor ordered incorporated into Work or placed near the Project for which the City made partial payment.

EXCEPTION: Contractor sent Payment Notifications to the following subcontractors explaining why Contractor withheld payment. Copies are attached.

Subcontractor Name:_____	Subcontractor Name: _____
Street Address: _____	Street Address: _____
City, State, and Zip Code: _____	City, State, and Zip Code: _____
Amount of Payment Withheld:_____	Amount of Payment Withheld: _____
Date Payment First Withheld: _____	Date Payment First Withheld: _____
Description of Good Faith Reason:_____	Description of Good Faith Reason:_____
_____	_____

_____
(Signature of Contractor's Representative)

_____
(Print or Type Name of Contractor's Representative)

SWORN TO AND SUBSCRIBED before me on:

_____
Date

_____
Notary Public in and for the State of Texas

My Commission Expires: _____
Expiration Date

_____
Print or Type Name of Notary Public

Document 00700

GENERAL CONDITIONS

August 15, 2015 EDITION

TABLE OF ARTICLES

1. GENERAL PROVISIONS
2. THE CITY
3. CONTRACTOR
4. ADMINISTRATION OF THE CONTRACT
5. SUBCONTRACTORS AND SUPPLIERS
6. CONSTRUCTION BY THE CITY OR BY SEPARATE CONTRACTORS
7. CHANGES IN THE WORK
8. TIME
9. PAYMENTS AND COMPLETION
10. SAFETY PRECAUTIONS
11. INSURANCE AND BONDS
12. UNCOVERING AND CORRECTION OF THE WORK
13. MISCELLANEOUS PROVISIONS
14. TERMINATION OR SUSPENSION OF THE CONTRACT

ARTICLE 1 - GENERAL PROVISIONS 3

1.1 DEFINITIONS 3
1.2 EXECUTION, CORRELATION, AND INTENT 5
1.3 OWNERSHIP AND USE OF DOCUMENTS 6
1.4 INTERPRETATION 6

ARTICLE 2 - THE CITY 6

2.1 LIMITATIONS OF THE CITY'S OFFICERS AND EMPLOYEES 6
2.2 DUTIES OF THE CITY 6
2.3 AVAILABILITY OF LAND AND USE OF SITE 6
2.4 THE CITY'S RIGHT TO STOP THE WORK 7
2.5 THE CITY'S RIGHT TO CARRY OUT WORK 7

ARTICLE 3 - CONTRACTOR 7

3.1 RESPONSIBILITIES 7
3.2 REVIEW OF CONTRACT AND FIELD CONDITIONS BY CONTRACTOR 7
3.3 SUPERVISION AND CONSTRUCTION PROCEDURES 7
3.4 SUPERINTENDENT 8
3.5 LABOR 8
3.6 PREVAILING WAGE RATES 9
3.7 LABOR CONDITIONS 9
3.8 DRUG DETECTION AND DETERRENCE 9
3.9 MATERIALS & EQUIPMENT 10
3.10 PRODUCT OPTIONS AND SUBSTITUTIONS 10
3.11 CASH ALLOWANCES 11
3.12 WARRANTY 11
3.13 TAXES 12
3.14 PERMITS, FEES, AND NOTICES 12
3.15 CONSTRUCTION SCHEDULES 12
3.16 DOCUMENTS AND SAMPLES AT THE SITE 12
3.17 MANUFACTURER'S SPECIFICATIONS 12
3.18 SHOP DRAWINGS, PRODUCT DATA, AND SAMPLES 13
3.19 CULTURAL RESOURCES AND ENDANGERED SPECIES 13
3.20 CUTTING AND PATCHING 14
3.21 CLEANING 14
3.22 SANITATION 14
3.23 ACCESS TO WORK AND TO INFORMATION 14
3.24 TRADE SECRETS 14
3.25 INDEMNIFICATION 14
3.26 RELEASE AND INDEMNIFICATION – PATENT, COPYRIGHT, TRADEMARK, AND TRADE SECRET INFRINGEMENT 15
3.27 INDEMNIFICATION PROCEDURES 15
3.28 CONTRACTOR DEBT 156

ARTICLE 4 - ADMINISTRATION OF THE CONTRACT 16

4.1 CONTRACT ADMINISTRATION 16
4.2 COMMUNICATIONS IN ADMINISTRATION OF THE CONTRACT 17
4.3 CLAIMS AND DISPUTES 17
4.4 RESOLUTION OF CLAIMS AND DISPUTES 18
4.5 CONDITION PRECEDENT TO SUIT; WAIVER OF ATTORNEYFEES AND INTEREST 18
4.6 INTERIM PAYMENT WAIVER & RELEASE 18

ARTICLE 5 - SUBCONTRACTORS AND SUPPLIERS 19

5.1 AWARD OF SUBCONTRACTS OTHER CONTRACTS FOR PORTIONS OF THE WORK 19
5.2 CONTRACTOR RESPONSIBILITY FOR SUBCONTRACTORS 19

ARTICLE 6 - CONSTRUCTION BY THE CITY OR BY SEPARATE CONTRACTORS 19

6.1 THE CITY'S RIGHT TO PERFORM CONSTRUCTION AND TO AWARD SEPARATE CONTRACTS 19
6.2 COORDINATION 19
6.3 MUTUAL RESPONSIBILITY 20
6.4 THE CITY'S RIGHT TO CLEAN UP 20

ARTICLE 7 - CHANGES IN THE WORK 20

7.1 CHANGES 20
7.2 WORK CHANGE DIRECTIVES 20
7.3 ADJUSTMENTS IN CONTRACT PRICE 21
7.4 MINOR CHANGES IN THE WORK 22

ARTICLE 8 - TIME 22

8.1 PROGRESS AND COMPLETION 22
8.2 DELAYS AND EXTENSIONS OF TIME 22

ARTICLE 9 - PAYMENTS AND COMPLETION 23

9.1 UNIT PRICE WORK 23
9.2 ESTIMATES FOR PAYMENT, UNIT PRICE WORK 23
9.3 STIPULATED PRICE WORK 24
9.4 APPLICATIONS FOR PAYMENT, STIPULATED PRICE WORK 24
9.5 CERTIFICATES FOR PAYMENT 24
9.6 COMPUTATIONS OF CERTIFICATES FOR PAYMENT 24
9.7 DECISIONS TO WITHHOLD CERTIFICATION 24
9.8 PROGRESS PAYMENTS 25
9.9 DATE OF SUBSTANTIAL COMPLETION 25
9.10 PARTIAL OCCUPANCY OR USE 26
9.11 FINAL COMPLETION AND FINAL PAYMENT 26

9.12 LIQUIDATED DAMAGES 27

ARTICLE 10 - SAFETY PRECAUTIONS 27

10.1 SAFETY PROGRAMS 27
10.2 POLLUTANTS AND POLLUTANT FACILITIES 28
10.3 SAFETY OF THE ENVIRONMENT, PERSONS, AND PROPERTY 28
10.4 EMERGENCIES 28

ARTICLE 11 - INSURANCE AND BONDS 28

11.1 GENERAL INSURANCE REQUIREMENTS 28
11.2 INSURANCE TO BE PROVIDED BY CONTRACTOR 29
11.3 PROOF OF INSURANCE 32
11.4 PERFORMANCE AND PAYMENT BONDS 33
11.5 MAINTENANCE BONDS 33
11.6 SURETY 33
11.7 DELIVERY OF BONDS 344

ARTICLE 12 - UNCOVERING AND CORRECTION OF THE WORK 344

12.1 UNCOVERING OF THE WORK 34
12.2 CORRECTION OF THE WORK 34
12.3 ACCEPTANCE OF NONCONFORMING WORK 34

ARTICLE 13 - MISCELLANEOUS PROVISIONS 34

13.1 GOVERNING LAWS 34
13.2 SUCCESSORS 345
13.3 BUSINESS STRUCTURE AND ASSIGNMENTS . 355
13.4 WRITTEN NOTICE 35
13.5 RIGHTS AND REMEDIES 35
13.6 TESTS AND INSPECTIONS 35
13.7 INTEREST 35
13.8 PARTIES IN INTEREST 36
13.9 ENTIRE CONTRACT 36
13.10 WRITTEN AMENDMENT 36
13.11 COMPLIANCE WITH LAWS 36
13.12 SEVERABILITY 36

ARTICLE 14 - TERMINATION OR SUSPENSION OF THE CONTRACT 36

14.1 TERMINATION BY THE CITY FOR CAUSE 36
14.2 TERMINATION BY THE CITY FOR CONVENIENCE 37
14.3 SUSPENSION BY THE CITY FOR CONVENIENCE 37
14.4 TERMINATION BY CONTRACTOR 38

ARTICLE 1 - GENERAL PROVISIONS

1.1 DEFINITIONS

1.1.1 Agreement: Document signed by the Parties and binding the Parties, containing the name of Contractor, title and location of the Project, Original Contract Time, Original Contract Price, enumeration of documents included in the Contract, and other provisions.

1.1.2 Bonds: Performance Bond, Payment Bond, Maintenance Bond, and other Surety instruments executed by Surety. When in singular form, refers to individual instrument.

1.1.3 Business Enterprise: Any business entity registered in a program authorized by 49 C.F.R. § 26 (where applicable) or City Code of Ordinances, Chapter 15, Article II, relating to Equal Opportunity Employment and taking affirmative action to ensure that applicants are employed and employees are treated without regard to race, religion, color, sex, national origin, or age. The term "Business Enterprise" may include any Disadvantaged Business Enterprise ("DBE"), Minority Business Enterprise ("MBE"), Woman Business Enterprise ("WBE"), Small Business Enterprise ("SBE"), Person with Disability Enterprise ("PDBE"), and any Historically Underutilized Business ("HUB").

1.1.4 Business Enterprise Policy: Contract documents and applicable policies relating to Business Enterprises and authorized under 49 C.F.R. § 26 or City Code of Ordinances, Chapter 15, Article II.

1.1.5 Cash Allowance: An estimated sum of money to be used only for a limited class of expenditures such as utility relocation costs, fees for special licenses or permits, or other "pass-through" costs that would be the same for any contractor. Cash Allowances may not be used to purchase goods or services that are not specified in the Contract. The unspecified items must be purchased according to the terms of Article 7.

1.1.6 Change Order: Written instrument prepared by the City and signed by City Engineer and Contractor, specifying the following:

1.1.6.1 a change in the Work;
1.1.6.2 a change in Contract Price, if any; and
1.1.6.3 a change in Contract Time, if any.

The value of a Change Order is the net amount after offsetting all deductions against all additions effected by the Change Order.

1.1.7 City: The City of Houston, a home rule municipality located principally within Harris County, Texas, including its successors and its authorized representatives.

1.1.8 City Engineer: The City Engineer, or the City employee representing the City Engineer, designated in the Agreement and authorized to represent the City, or successors.

1.1.9 Claim: Written demand or written assertion by one Party seeking adjustment of the Contract, payment of money, extension of time, or other relief under the Contract and includes, but is not limited to, claims for materials, labor, equipment, delay, changes, adjustments, substitutions, fees and third party claims. The Party making the Claim has the responsibility to substantiate the Claim.

1.1.10 Conditions of the Contract: General Conditions and Supplementary Conditions.

1.1.11 Construction Manager: Person or firm under contract with the City as its authorized representative to oversee and administer construction of the Work, and who may perform the role of Project Manager and Inspector, as designated by City Engineer in writing.

1.1.12 Contract: The Agreement; documents enumerated in and incorporated into the Agreement, Modifications, and amendments.

1.1.13 Contract Price: The monetary amount stated in the Agreement adjusted by Change Order, and increases or decreases in Unit Price Quantities, if any.

1.1.14 Contract Time: The number of days stated in the Agreement to substantially complete the Work, plus days authorized by Change Order.

1.1.15 Contractor: Person or firm identified as such in the Agreement including its successors and its authorized representatives.

1.1.16 Date of Commencement of the Work: Date established in Notice to Proceed on which Contract Time will commence. This date will not be changed by failure of Contractor, or persons or entities for whom Contractor is responsible, to act.

1.1.17 Date of Substantial Completion: Date that construction, or portion thereof designated by City Engineer, is certified by City Engineer to be substantially complete.

1.1.18 Design Consultant: Person or firm, under contract with the City, to provide professional services during construction and its authorized representatives. If a Design Consultant is not employed for services during construction, Project Manager will perform duties of Design Consultant designated in the Contract in addition to usual duties of Project Manager.

1.1.19 Drawings: Graphic and pictorial portions of the Contract that define the character and scope of the Work.

1.1.20 Extra Unit Price: Unit Prices, which may be required for completion of the Work. These Unit Prices and Unit Price Quantities are in the Contract and are included in Original Contract Price.

1.1.21 Furnish: To supply, pay for, deliver to the site, and unload.

1.1.22 General Requirements: The sections of Division 01 Specifications that specify administrative and procedural requirements and temporary facilities required for the Work.

1.1.23 Inspector: City's employee or agent authorized to assist with inspection of the Work.

1.1.24 Install: Unpack, assemble, erect, place, anchor, apply, work to dimension, finish, cure, clean, protect, and similar operations.

1.1.25 Legal Holiday: Day established by the City Council as a holiday.

1.1.26 Major Unit Price Work: An individual Unit Price item,

1.1.26.1 whose value is greater than five percent of Original Contract Price,

1.1.26.2 whose value becomes greater than five percent of Original Contract Price as the result of an increase in quantity, or

1.1.26.3 whose value is $100,000, whichever is least.

1.1.27 Minor Change in the Work: A written change in the Work, ordered by City Engineer, that does not change Contract Price or Contract Time, and that is consistent with the general scope of the Contract.

1.1.28 Modification: Change Order, Work Change Directive, or Minor Change in the Work.

1.1.29 Notice of Noncompliance: A written notice by City Engineer to Contractor regarding defective or nonconforming work that does not meet the Contract requirements, and that establishes a time by which Contractor shall correct the defective or nonconforming work.

1.1.30 Notice to Proceed: A written notice by City Engineer to Contractor establishing Date of Commencement of the Work.

1.1.31 Office of Business Opportunity: any reference to, or use of, the "Office of Affirmative Action" shall mean the Office of Business Opportunity, or any such future name to which it is changed.

1.1.32 Original Contract Price: The monetary amount originally stated in the Agreement.

1.1.33 Parties: Contractor and the City. When in singular form, refers to Contractor or the City.

1.1.34 Pollutant: Any materials subject to the Texas Solid Waste Disposal Act.

1.1.35 Pollutant Facility: Any facility regulated by the State of Texas to protect the health and environment from contamination by Pollutants, including without limitation, landfills, oil and gas production and storage facilities, wastewater facilities, waste injection wells, and storage tanks (including drums).

1.1.36 Product: Materials, equipment, or systems incorporated into the Work or to be incorporated into the Work.

1.1.37 Product Data: Illustrations, standard schedules, performance charts, instructions, brochures, diagrams, and other information furnished by Contractor to illustrate a Product.

1.1.38 Project: Total construction, of which the Work performed under the Contract may be the whole or a part, and which may include construction by the City or by separate contractors.

1.1.39 Project Manager: City Engineer's authorized representative for administration of the Work. Titles used within the City's departments may be different than those used in this definition.

1.1.40 Provide: Furnish and Install, complete, ready for intended use.

1.1.41 *Samples:* Physical examples that illustrate Products, or workmanship, and establish standards by which the Work is judged.

1.1.42 *Shop Drawings:* Drawings, diagrams, schedules, and other data specially prepared for the Work by Contractor, Subcontractor or Supplier, to illustrate a portion of the Work.

1.1.43 *Specifications:* Divisions 01 through 16 of the documents that are incorporated into the Agreement, consisting of written General Requirements and requirements for Products, standards, and workmanship for the Work, and performance of related services.

1.1.44 *Stipulated Price:* Single lump sum amount stated in the Contract for completion of the Work, or for designated portion of the Work.

1.1.45 *Subcontractor:* Person or firm that has direct or indirect contract with Contractor or with another Subcontractor to perform a portion of the Work and its authorized representatives.

1.1.46 *Superintendent:* Employee of Contractor having authority and responsibility to act for and represent Contractor.

1.1.47 *Supplementary Conditions:* Part of Conditions of the Contract that amends or supplements General Conditions.

1.1.48 *Supplier:* Manufacturer, distributor, materialman, or vendor having a direct agreement with Contractor or Subcontractor for Products, or services and its authorized representatives.

1.1.49 *Surety:* Corporate entity that is bound by one or more Bonds, and is responsible for completion of the Work, including the correction period, and for payment of debts incurred in fulfilling the Contract. Surety shall include co-surety or reinsurer, as applicable.

1.1.50 *Underground Facilities:* Pipes, conduits, ducts, cables, wires, manholes, vaults, tanks, tunnels, or other such facilities or attachments and encasements containing such facilities that exist below ground level.

1.1.51 *Unit Price:* An amount stated in the Contract for an individual, measurable item of work, which, when multiplied by actual quantity incorporated into the Work, amounts to full compensation for completion of the item, including work incidental to it.

1.1.52 *Unit Price Quantities:* Quantities indicated in the Contract that are approximations made by the City for contracting purposes.

1.1.53 *Work:* Entire construction required by the Contract, including all labor, Products, and services provided by Contractor to fulfill Contractor's obligations. The Work may constitute the whole or a portion of the Project.

1.1.54 *Work Change Directive:* A written change in the Work, ordered by City Engineer, that is within the general scope of the Contract and consisting of additions, deletions, or other revisions. A Work Change Directive will state proposed basis for adjustment, if any, in Contract Price or Contract Time, or both.

1.2 *EXECUTION, CORRELATION, AND INTENT*

1.2.1 Execution of the Contract by Contractor is conclusive that Contractor has visited the Work site, become familiar with local conditions under which the Work will be performed, and fully informed itself as to conditions and matters which can affect the Work or costs. Contractor further agrees that it has carefully correlated personal observations with requirements of the Contract.

1.2.2 The Contract and Modifications have been read and carefully considered by Contractor, who understands and agrees to their sufficiency for the Work. The Contract may not be more strongly construed against the City than against Contractor and Surety.

1.2.3 Contractor shall include all items necessary for proper execution and completion of the Work.

1.2.4 Reference to standard specifications, manuals, or codes of a technical society, organization, or association, or to laws or regulations of a governmental authority, whether specific or implied, mean the latest edition in effect as of date of receipt of bids, except as may be otherwise specifically stated in the Contract.

1.2.5 No provision of any referenced standard, specification, or manual changes the duties and responsibilities of the City, City Engineer, Contractor, or Design Consultant from those set forth in the Contract. Nor do these provisions assign to Design Consultant any duty or authority to supervise or direct performance of the Work or any duty or

authority to undertake any actions contrary to provisions of the Contract.

1.2.6 Organization of Specifications into divisions, sections, and articles and arrangement of Drawings does not control Contractor in dividing the Work among Subcontractors or in establishing the extent of work to be performed by any trade.

1.2.7 Unless otherwise defined in the Contract, words which have well-known construction industry technical meanings are used in the Contract in accordance with these recognized meanings.

1.3 OWNERSHIP AND USE OF DOCUMENTS

1.3.1 Drawings, Specifications, and other documents prepared by the City or by Design Consultant are instruments of service through which the Work to be executed by Contractor is described. Contractor may retain one Contract record set.

1.3.2 Neither Contractor, Subcontractor, nor Supplier will own or claim a copyright to documents contained in the Contract or any part of the Contract.

1.3.3 Documents contained in the Contract, prepared by the City or by Design Consultant, and copies furnished to Contractor, are for use solely with respect to the Work. They may not be used by Contractor, Subcontractor or Supplier on other projects or for additions to the Work, outside the scope of the Work, without the specific written consent of City Engineer, and Design Consultant, when applicable.

1.3.4 Contractor, Subcontractors, and Suppliers are granted a limited license to use and reproduce applicable portions of the Contract appropriate to and for use in execution of their work under the Contract.

1.4 *INTERPRETATION*

1.4.1 Specifications are written in an imperative streamlined form and are directed to Contractor, unless noted otherwise. When written in this form, words "shall be" are included by inference where a colon (:) is used within sentences or phrases.

1.4.2 In the interest of brevity, the Contract frequently omits modifying words such as "all" and "any" and articles such as "the" and "an", but an absent modifier or article is not intended to affect interpretation of a statement.

ARTICLE 2 - THE CITY

2.1 *LIMITATIONS OF THE CITY'S OFFICERS AND EMPLOYEES*

2.1.1 No officer or employee of the City may authorize Contractor to perform an act or work contrary to the Contract, except as otherwise provided in the Contract.

2.2 *DUTIES OF THE CITY*

2.2.1 If a building permit is required, the City will process an application for, and Contractor shall purchase the building permit before Date of Commencement of the Work.

2.2.2 The City will make available to Contractor a reproducible set of Drawings. Additional copies will be furnished, on Contractor's request, at the cost of reproduction.

2.2.3 When necessary for performance of the Work, the City will provide surveys describing physical characteristics, legal limitations, legal description of site, and horizontal and vertical control adequate to lay out the Work.

2.2.4 Information or services that the City is required to provide under the Contract will be provided by the City with reasonable promptness to avoid delay in orderly progress of the Work.

2.2.5 The Contract imposes no implied duty on the City. The City does not warrant any plans or specifications associated with the Contract.

2.2.6 Except as expressly stated in this Article, the City owes no duty to the Contractor or any subcontractor.

2.3 *AVAILABILITY OF LAND AND USE OF SITE*

2.3.1 The City will furnish, as indicated in the Contract, rights-of-way, land on which the Work is to be performed, and other land designated in the Contract for use by Contractor unless otherwise provided in the Contract.

2.3.2 Contractor shall confine operations at site to those areas permitted by law, ordinances, permits, and the Contract, and may not unreasonably encumber site with materials or equipment.

2.3.3 In addition to land provided by the City under Section 2.3, Contractor shall provide all land and access to land that may be required for use by Contractor for temporary construction facilities or for storage of materials and equipment, and shall indemnify the City during its use of the land as stated in Section 3.25.

2.4 *THE CITY'S RIGHT TO STOP THE WORK*

2.4.1 If Contractor fails to carry out the Work in accordance with the Contract, or fails to correct work which is not in accordance with requirements of the Contract as required in Sections 12.1 and 12.2, the City may, by Notice of Noncompliance, order Contractor to stop the Work or any portion of the Work until the cause for the order has been eliminated. However, the right of the City to stop the Work will not give rise to a Claim for delay or to a duty on the part of the City to exercise this right for the benefit of Contractor or any other person or entity, except to the extent required by Section 6.2. If Contractor corrects the defective or nonconforming work within the time established in Notice of Noncompliance, City Engineer will give written notice to Contractor to resume performance of the Work.

2.5 *THE CITY'S RIGHT TO CARRY OUT WORK*

2.5.1 If Contractor fails to carry out work in accordance with the Contract, and fails within the period established in a Notice of Noncompliance to correct the nonconforming work, the City may, after expiration of the required period, correct the deficiencies without prejudice to other remedies the City may have, including rights of the City under Section 14.1.

2.5.1.1 When the City corrects deficiencies, City Engineer will issue an appropriate Change Order and deduct from payments then or thereafter due Contractor the cost of correcting the deficiencies, including compensation for Design Consultant's and Construction Manager's additional services and expenses made necessary by such default, neglect, or failure. This action by the City and amounts charged to Contractor are both subject to prior approval of City Engineer. If payments, then or thereafter due Contractor, are not sufficient to cover these amounts, Contractor shall pay the difference to the City.

2.5.2 Notwithstanding the City's right to carry out work, maintenance and protection of the Work remains Contractor's responsibility, as provided in the Contract.

ARTICLE 3 - CONTRACTOR

3.1 *RESPONSIBILITIES*

3.1.1 Contractor shall maintain office with agent in the greater City of Houston area during the Contractor's performance under the Contract. Contractor shall file its street address with City Engineer.

3.1.2 Contractor and Contractor's employees shall not give or lend money or anything of value to an officer or employee of the City. Should this Paragraph 3.1.2 be violated, City Engineer may terminate the Contract under Section 14.1.

3.2 *REVIEW OF CONTRACT AND FIELD CONDITIONS BY CONTRACTOR*

3.2.1 Contractor shall carefully study and compare documents contained in the Contract with each other and with information furnished by the City pursuant to Section 2.2 and shall immediately report, in writing, any errors, inconsistencies, or omissions to City Engineer. If work is affected, Contractor shall obtain a written interpretation or clarification from City Engineer before proceeding with the affected work. However, Contractor will not be liable to the City for failure to report an error, inconsistency, or omission in the Contract unless Contractor had actual knowledge or should have had knowledge of the error, inconsistency, or omission.

3.2.2 Contractor shall take field measurements and verify field conditions, and shall carefully compare the conditions and other information known to Contractor with the Contract, before commencing activities. Contractor shall immediately report, in writing, to City Engineer for interpretation or clarification of discrepancies, inconsistencies, or omissions discovered during this process.

3.2.3 Contractor shall make a reasonable attempt to understand the Contract before requesting interpretation from City Engineer.

3.3 *SUPERVISION AND CONSTRUCTION PROCEDURES*

3.3.1 Contractor shall supervise, direct, and inspect the Work competently and efficiently, devoting the attention and applying the skills and

expertise as necessary to perform the Work in accordance with the Contract. Contractor is solely responsible and has control over construction means, methods, techniques, sequences, and procedures of construction; for safety precautions and programs in connection with the Work; and for coordinating all work under the Contract.

3.3.2 Regardless of observations or inspections by the City or City's consultants, Contractor shall perform and complete the Work in accordance with the Contract and submittals approved pursuant to Section 3.18. The City is not liable or responsible to Contractor or Surety for work performed by Contractor that is not in accordance with the Contract regardless of whether discovered during construction or after acceptance of the Work.

3.4 *SUPERINTENDENT*

3.4.1 Contractor shall employ a competent Superintendent and necessary assistants who shall be present at the site during performance of the Work. Communications given to Superintendent are binding on the Contractor.

3.4.2 Contractor shall notify City Engineer in writing of its intent to replace the Superintendent. Contractor may not replace the Superintendent if City Engineer makes a reasonable objection in writing.

3.5 *LABOR*

3.5.1 Contractor shall provide competent, qualified personnel to survey and lay out the Work and perform construction as required by the Contract. The City may, by written notice, require Contractor to remove from the Work any employee of Contractor or Subcontractors to whom City Engineer makes reasonable objection.

3.5.2 Contractor shall comply with the applicable Business Enterprise Policy set out in this Agreement and in the Supplementary Conditions, as set out in Chapter 15, Article V of the City of Houston Code of Ordinances.

3.5.3 When Original Contract Price is greater than $1,000,000, Contractor shall make Good Faith Efforts to award subcontracts or supply agreements in at least the percentages set out in the Supplementary Conditions for Business Enterprise Policy. Contractor acknowledges that it has reviewed the requirements for Good Faith Efforts on file with the City's Office of Business Opportunity and shall comply with them.

3.5.3.1 Contractor shall require written subcontracts with Business Enterprises and shall submit all disputes with Business Enterprises to voluntary mediation. Business Enterprise subcontracts complying with City Code of Ordinances Chapter 15, Article II must contain the terms set out in Subparagraph 3.5.3.2. If Contractor is an individual person, as distinguished from a corporation, partnership, or other legal entity, and the amount of the subcontract is $50,000 or less, the subcontract must also be signed by the attorneys of the respective parties.

3.5.3.2 Contractor shall ensure that subcontracts with Business Enterprise firms are clearly labeled **"THIS CONTRACT MAY BE SUBJECT TO MEDIATION ACCORDING TO THE TEXAS ALTERNATIVE DISPUTE RESOLUTION ACT"** and contain the following terms:

3.5.3.2.1 (Business Enterprise) may not delegate or subcontract more than 50 percent of work under this subcontract to any other subcontractor without the express written consent of the City's OBO Director (the "Director").

3.5.3.2.2 (Business Enterprise) shall permit representatives of the City of Houston, at all reasonable times, to perform (1) audits of the books and records of the Subcontractors and Suppliers, and (2) inspections of all places where work is to be undertaken in connection with this subcontract. (Business Enterprise) shall keep the books and records available for this purpose for at least four years after the end of its performance under this subcontract. Nothing in this provision shall affect the time for bringing a cause of action nor the applicable statute of limitations.

3.5.3.2.3 Within five business days of execution of this subcontract, Contractor and (Business Enterprise) shall designate in writing to the Director an agent for receiving any notice required or permitted to be given pursuant to Chapter 15 of the Houston City Code of Ordinances, along with the street and mailing address and phone number of the agent.

3.5.4 The requirements and terms of the City of Houston Pay or Play Program, as set out in Executive Order 1-7 and Ordinance 2007-0534, are incorporated into the Contract for all purposes. Contractor shall comply with the terms and conditions of the Pay or Play Program as they are set out at the time of City Council approval of this

agreement. IF CONTRACTOR DOES NOT PAY IN ACCORDANCE WITH THE PAY OR PLAY PROGRAM WITHIN 30 DAYS OF THE DATE CITY ENGINEEER SENDS CONTRACTOR WRITTEN NOTIFICATION, CITY CONTROLLER MAY DEDUCT FUNDS UP TO THE AMOUNT OWED FROM ANY PAYMENTS OWED TO CONTRACTOR UNDER THIS AGREEMENT, AND CONTRACTOR WAIVES ANY RECOURSE.

3.6 *PREVAILING WAGE RATES*

3.6.1 Contractor shall comply with governing statutes providing for labor classification of wage scales for each craft or type of laborer, worker, or mechanic.

3.6.2 Prevailing wage rates applicable to the Work may be one or a combination of the following wage rates identified in Division 00:

- 3.6.2.1 Federal Wage Rate General Decisions
  - 3.6.2.1.1 Highway Rates
  - 3.6.2.1.2 Building Rates
  - 3.6.2.1.3 Heavy Construction Rates
  - 3.6.2.1.4 Residential Rates
- 3.6.2.2 City Prevailing Wage Rates
  - 3.6.2.2.1 Building Construction Rates
  - 3.6.2.2.2 Engineering Construction Rates
  - 3.6.2.2.3 Asbestos Worker Rates

3.6.3 Each week Contractor shall submit to the City's Mayor's Office of Business Opportunity certified copies of payrolls showing classifications and wages paid by Contractor, Subcontractors, and Suppliers for each employee under the Contract, for any day included in the Contract.

3.7 *LABOR CONDITIONS*

3.7.1 In the event of labor disputes affecting Contractor or Contractor's employees, Contractor shall utilize all possible means to resolve disputes in order that the Work not be delayed to any extent. These means will include seeking injunctive relief and filing unfair labor practice charges, and any other action available to Contractor.

3.7.2 When Contractor has knowledge that any actual or potential labor dispute is delaying or is threatening to delay timely performance of the Work, Contractor shall immediately notify City Engineer in writing. No Claims will be accepted by City Engineer for costs incurred as a result of jurisdictional or labor disputes.

3.8 *DRUG DETECTION AND DETERRENCE*

3.8.1 It is the policy of the City to achieve a drug-free work force and to provide a workplace that is free from the use of illegal drugs and alcohol. It is also the policy of the City that manufacture, distribution, dispensation, possession, sale, or use of illegal drugs or alcohol by contractors while on the City's premises is prohibited. By executing the Contract, Contractor represents and certifies that it meets and will comply with all requirements and procedures set forth in the Mayor's Policy on Drug Detection and Deterrence, City Council Motion No. 92-1971 ("Mayor's Policy") and the Mayor's Drug Detection and Deterrence Procedures for Contractors, Executive Order No. 1-31, (Revised) ("Executive Order"). Mayor's Policy is on file in the office of the City Secretary. Copies of Executive Order may be obtained at the location specified in the Advertisement for Bids.

3.8.1.1 The Executive Order applies to the City's contracts for labor or services except the following:

- 3.8.1.1.1 contracts authorized by Emergency Purchase Orders,
- 3.8.1.1.2 contracts in which imposition of requirements of the Executive Order would exclude all potential bidders or proposers, or would eliminate meaningful competition for the Contract,
- 3.8.1.1.3 contracts with companies that have fewer than 15 employees during any 20-week period during a calendar year and no safety impact positions,
- 3.8.1.1.4 contracts with non-profit organizations providing services at no cost or reduced cost to the public, and
- 3.8.1.1.5 contracts with federal, state, or local governmental entities.

3.8.1.2 Prior to execution of the Contract, Contractor shall have filed with the City:

- 3.8.1.2.1 a Drug Policy Compliance Agreement form (Attachment "A" to the Executive Order), and
- 3.8.1.2.2 a copy of Contractor's drug free workplace policy, and
- 3.8.1.2.3 a written designation of all safety impact positions, if applicable, or a Contractor's Certification of a No Safety Impact Positions form (Attachment "C" to the Executive Order).

3.8.1.3 Every six months during performance of the Contract and upon completion of the Contract, Contractor shall file a Drug Policy Compliance Declaration form (Attachment "B" to the Executive Order). The Contractor shall submit the Drug Policy Compliance Declaration within 30 days of expiration of each six-month period of performance and within 30 days of completion of the Contract. The first six-month period shall begin on Date of Commencement of the Work.

3.8.1.4 Contractor shall have a continuing obligation to file updated designation of safety impact positions when additional safety impact positions are added to Contractor's employee workforce during performance of the Work.

3.8.1.5 Contractor shall require its Subcontractors and Suppliers to comply with the Mayor's Policy and Executive Order. Contractor is responsible for securing and maintaining required documents from Subcontractors and Suppliers for the City inspection throughout the term of the Contract.

3.8.1.6 Failure of Contractor to comply with requirements will be a material breach of the Contract entitling the City to terminate in accordance with Section 14.1.

3.9 *MATERIALS & EQUIPMENT*

3.9.1 Unless otherwise provided in the Contract, Contractor shall provide and assume full responsibility for Products, labor, transportation, construction equipment and machinery, tools, appliances, fuel, power, light, heat, telephone, water, sanitary facilities, transportation, temporary facilities, supplies, and other facilities and incidentals necessary for Furnishing, performing, testing, starting-up, and completing the Work.

3.9.1.1 Contractor, Subcontractors, and Suppliers shall use Ultra Low Sulfur Diesel Fuel in all diesel operating vehicles and motorized equipment utilized in performing the Work. Ultra Low Sulfur Diesel Fuel is defined as diesel fuel having 15 ppm or the applicable standard set by state or federal law or rules and regulations of the Texas Commission on Environmental Quality, or the Environmental Protection Agency, whichever is less in sulfur content. Off-road Ultra Low Sulfur Diesel Fuel may be used in lieu of on-road Ultra Low Sulfur Diesel Fuel. Contractor shall provide, upon request by City Engineer, proof that Contractor, Subcontractors, and Suppliers are using Ultra Low Sulfur Diesel Fuel.

3.9.2 Contractor shall provide Products that are:

3.9.2.1 new, unless otherwise required or permitted by the Contract, and

3.9.2.2 of specified quality.

If required by City Engineer, Contractor shall furnish satisfactory evidence, including reports of required tests, as to kind and quality of Products.

3.9.3 Contractor shall store Products in a safe, neat, compact, and protected manner. Contractor shall also store Products delivered during the work, along the right-of-way:

3.9.3.1 so as to cause the least inconvenience to property owners, tenants, and general public; and

3.9.3.2 so as not to block access to, or be closer than, three feet to any fire hydrant.

Contractor shall protect trees, lawns, walks, drives, streets, and other improvements that are to remain, from damage. If private or public property is damaged by Contractor, Contractor shall, at its sole expense, restore the damaged property to at least its original condition.

3.9.3.1 Contractor shall obtain City Engineer's approval for storage areas used for Products for which payment has been requested under Paragraph 9.6.1. Contractor shall provide the City access to the storage areas for inspection purposes. Products, once paid for by the City, become the property of the City and may not be removed from place of storage, without City Engineer's written permission except for a movement to the site. Contractor's Installation Floater, required under Section 11.2, shall cover all perils, including loss or damage to Products during storage, loading, unloading, and transit to the site.

3.10 *PRODUCT OPTIONS AND SUBSTITUTIONS*

3.10.1 For Products specified by reference standards or by description only, Contractor may provide any Product meeting those standards or description.

3.10.2 For Products specified by naming one or more manufacturers with provision for substitutions or equal, Contractor may submit a request for substitution for any manufacturer not named.

3.10.3 City Engineer will consider requests for substitutions only within the first 15 percent of Contract Time, or first 90 days after date of Notice to Proceed, whichever is less.

3.10.4 Contractor shall document each request for substitution with complete data

substantiating compliance of proposed substitution with the Contract.

3.10.5 A request for substitution constitutes a representation that Contractor:

3.10.5.1 has investigated the proposed Product and determined that it meets or exceeds the quality level of the specified Product;

3.10.5.2 shall provide the same warranty for the substitution as for the specified Product;

3.10.5.3 shall coordinate installation of the proposed substitution and make changes to other work which may be required for the Work to be completed, with no additional cost or increase in time to the City;

3.10.5.4 confirms that cost data is complete and includes all related costs under the Contract;

3.10.5.5 waives Claim for additional costs or time extensions that may subsequently become apparent; and

3.10.5.6 shall provide review or redesign services by a design consultant with appropriate professional license and shall obtain re-approval and permits from authorities.

3.10.6 City Engineer will not consider and will not approve substitutions when:

3.10.6.1 they are indicated or implied on Shop Drawing or Product Data submittals without separate written request; or

3.10.6.2 acceptance will require revision to the Contract.

3.10.7 City Engineer may reject requests for substitution, and his decision will be final and binding on the Parties.

3.11 *CASH ALLOWANCES*

3.11.1 Contract Price includes Cash Allowances as identified in the Contract.

3.11.2 The City will pay the actual costs of Cash Allowance item exclusive of profit, overhead or administrative costs. If actual costs exceed the Cash Allowance, City Engineer must approve a Change Order for the additional costs.

3.12 *WARRANTY*

3.12.1 Contractor warrants to the City that Products furnished under the Contract are:

3.12.1.1 free of defects in title;

3.12.1.2 of good quality; and

3.12.1.3 new, unless otherwise required or permitted by the Contract.

If required by the City Engineer, Contractor shall furnish satisfactory evidence as to kind, quality and title of Products, and that Products conform to requirements of the Contract.

3.12.2 In the event of a defect in a Product, either during construction or warranty period, Contractor shall take appropriate action with manufacturer of Product to assure correction or replacement of defective Product with minimum delay.

3.12.3 Contractor warrants that the Work is free of defects not inherent in the quality required or permitted, and that the Work does conform with the requirements of the Contract. Contractor further warrants that the Work has been performed in a thorough and workmanlike manner.

3.12.4 Contractor warrants that the Work is free of concentrations on polychlorinated biphenyl (PCB) and other substances defined as hazardous by the Comprehensive Environmental Response Compensation and Liability Act (CERCLA) or any other applicable law or regulation.

3.12.5 Work not conforming to requirements of Section 3.12, including substitutions not properly approved and authorized, may be considered nonconforming work.

3.12.6 Contractor's warranty excludes remedy for damage or defect caused by:

3.12.6.1 improper or insufficient maintenance by the City;

3.12.6.2 normal wear and tear under normal usage; or

3.12.6.3 claim that hazardous material was incorporated into the Work, if that material was specified in the Contract.

3.12.7 Contractor warrants that title to all work covered by Contractor's request for payment passes to the City upon incorporation into the Work or upon Contractor's receipt of payment, whichever occurs first. The Contractor further warrants that the title is free of all liens, claims, security interests or other interests ("Encumbrances"). If not, upon written demand from City Engineer, Contractor shall immediately take legal action necessary to remove Encumbrances.

3.13 *TAXES*

3.13.1 Contractor shall pay all sales, consumer, use, and similar taxes, which are in effect or scheduled to go into effect on or before bids are received, related to work provided by Contractor.

3.13.2 Contractor shall obtain, and require Subcontractors and Suppliers to obtain, necessary permits from the state and local taxing authorities to perform contractual obligations under the Contract, including sales tax permits.

3.13.3 The City is exempt from the Federal Transportation and Excise Tax. Contractor shall comply with federal regulations governing the exemptions.

3.13.4 Products incorporated into the Work are exempt from state sales tax according to provisions of the TEX. TAX CODE ANN. CH. 151, Subsection H.

3.14 *PERMITS, FEES, AND NOTICES*

3.14.1 Unless otherwise provided in the Contract, Contractor shall secure and pay for all construction permits, licenses, and inspections:

3.14.1.1 necessary for proper execution and completion of the Work; and

3.14.1.2 legally required at time bids are received.

3.15 *CONSTRUCTION SCHEDULES*

3.15.1 On receipt of Notice to Proceed, Contractor shall promptly prepare and submit construction schedule for the Work for City Engineer's review. The schedule must reflect the minimum time required to complete the Work not to exceed Contract Time.

3.15.2 Contractor shall give 24-hour written notice to City Engineer before commencing work or resuming work where work has been stopped. Contractor shall also give the same notice to inspectors.

3.15.3 Contractor shall incorporate milestones specified in Summary of Work Specification into the construction schedule. Contractor's failure to meet a milestone, as determined by City Engineer, may be considered a material breach of the Contract.

3.15.4 Each month, Contractor shall submit to City Engineer a copy of an updated construction schedule indicating actual progress, incorporating applicable changes, and indicating courses of action required to assure completion of the Work within Contract Time.

3.15.5 Contractor shall keep a current schedule of submittals that coordinates with the construction schedule, and shall submit the initial schedule of submittals to City Engineer for approval.

3.16 *DOCUMENTS AND SAMPLES AT THE SITE*

3.16.1 Contractor shall maintain at the site, and make available to City Engineer, one record copy of Drawings, Specifications, and Modifications. Contractor shall maintain the documents in good order and marked currently to record changes and selections made during construction. In addition, Contractor shall maintain at the site, approved Shop Drawings, Product Data, Samples, and similar submittals, which will be delivered to City Engineer prior to final inspection as required in Paragraph 9.11.4.

3.16.2 Contractor shall maintain all books, documents, papers, accounting records, and other relevant documentation pursuant to the Work and shall make the books, documents, papers, and accounting records available to representatives of the City for review and audits during the Contract term and for the greater of three years following Date of Substantial Completion or until all litigation or audits are fully resolved.

3.16.3 Contractor shall provide to City Attorney all documents and records that City Attorney deems necessary to assist in determining Contractor's compliance with the Contract, with the exception of those documents made confidential by federal or state law or regulation.

3.17 *MANUFACTURER'S SPECIFICATIONS*

3.17.1 Contractor shall handle, store, and Install Products and perform all work in the manner required by Product manufacturer. Should the Contract and manufacturer's instructions conflict, Contractor shall report conflict to City Engineer for resolution prior to proceeding with the affected work.

3.17.2 References in the Contract to the manufacturer's specifications, directions, or recommendations, mean manufacturer's current published documents in effect as of date of receipt of bids, or in the case of a Modification, as of date of Modification.

3.18 SHOP DRAWINGS, PRODUCT DATA, AND SAMPLES

3.18.1 Shop Drawings, Product Data, and Samples are not part of the Contract. The purpose of Contractor submittals is to demonstrate, for those portions of the Work for which submittals are required, the way Contractor proposes to conform to information given and design concept expressed in the Contract.

3.18.2 Contractor shall submit to Project Manager for review the Shop Drawings, Product Data, and Samples, which are required by the Contract. Review by Project Manager is subject to limitations of Paragraph 4.1.4. Contractor shall transmit the submittals to the Project Manager with reasonable promptness and in a sequence, so as to cause no delay in the Work or in activities of the City or of separate contractors. Contractor shall transmit submittals in time to allow a minimum of 30 days for Project Manager's review prior to date Contractor needs reviewed submittals returned. This time may be shortened for a particular job requirement if approved by Project Manager in advance of submittal.

3.18.3 Contractor shall certify that the content of submittals conforms to the Contract without exception by affixing Contractor's approval stamp and signature. By certifying and submitting Shop Drawings, Product Data, and Samples, Contractor represents, and Contractor's stamp of approval shall state, that Contractor has determined and verified materials, quantities, field measurements, and field construction criteria related to the submittal, and has checked and coordinated information contained within the submittals with requirements of the Contract.

3.18.4 Contractor may not perform any work requiring submittal and review of Shop Drawings, Product Data, or Samples until the submittal has been returned with appropriate review decision by the Project Manager. Contractor shall perform work in accordance with the review.

3.18.5 If Contractor performs any work requiring submittals prior to review and acceptance of the submittals by Project Manager, such work is at Contractor's risk and the City is not obligated to accept work if the submittals are later found to be unacceptable.

3.18.6 If, in the opinion of Project Manager, the submittals are incomplete, or demonstrate an inadequate understanding of the Work or lack of review by the Contractor, then submittals may be returned to the Contractor for correction and resubmittal.

3.18.7 Contractor shall direct specific attention in writing and on the resubmitted Shop Drawings, Product Data, or Samples to any additional proposed revisions, other than those revisions requested by Project Manager on previous submittals.

3.18.8 Contractor is not relieved of responsibility for deviations from requirements of the Contract by Project Manager's review of Shop Drawings, Product Data, or Samples unless Contractor has specifically informed Project Manager in writing of the deviation at the time of the submittal, and Project Manager has given written approval of the deviation.

3.18.9 When professional certification of performance criteria of Products is required by the Contract, the City may rely upon accuracy and completeness of the calculations and certifications.

3.18.10 For Product colors or textures to be selected by the City, Contractor shall submit all samples together to allow preparation of a complete selection schedule.

3.18.11 Contractor shall submit informational submittals, on which Project Manager is not expected to take responsive action, as required by the Contract.

3.18.12 Submittals made by Contractor which are not required by the Contract may be returned to Contractor without action.

3.19 CULTURAL RESOURCES AND ENDANGERED SPECIES

3.19.1 Contractor may not remove or disturb, or cause to be removed or disturbed, any historical, archaeological, architectural, or other cultural artifacts, relics, vestiges, remains, or objects of antiquity. If Contractor discovers one of these items, Contractor shall immediately notify City Engineer and further comply with the requirements of 13 Tex. Admin. Code Chs. 25 and 26 (2002), or successor regulation. Contractor shall protect site and cultural resources from further disturbance until professional examination can be made or until clearance to proceed is authorized in writing by City Engineer.

3.19.2 Should either threatened or endangered plant or animal species be encountered,

Contractor shall cease work immediately in the area of encounter and notify City Engineer.

3.20 *CUTTING AND PATCHING*

3.20.1 Contractor is responsible for necessary cutting, fitting, and patching to accomplish the Work and shall suitably support, anchor, attach, match, and trim or seal materials to work of other contractors. Contractor shall coordinate the Work with work of other contractors to minimize conflicts, as provided in Article 6.

3.20.2 Contractor may not endanger work by cutting, digging, or other action, and may not cut or alter work of other contractors except by written consent of City Engineer and affected contractor.

3.21 *CLEANING*

3.21.1 Contractor shall perform daily cleanup of all dirt, debris, scrap materials and other disposable items resulting from Contractor's operations, whether on-site or off-site. Unless otherwise authorized in writing by City Engineer, Contractor shall keep all streets, access streets, driveways, areas of public access, walkways, and other designated areas clean and open at all times.

3.21.2 Failure of Contractor to maintain a clean site, including access streets, is the basis for City Engineer to issue a Notice of Noncompliance. Should compliance not be attained within the time period in the Notice of Noncompliance, City Engineer may authorize necessary cleanup to be performed by others and the cost of the cleanup will be deducted from monies due Contractor.

Contractor shall legally dispose off-site, all waste materials and other excess materials resulting from Contractor's operations.

3.22 *SANITATION*

3.22.1 Contractor shall provide and maintain sanitary facilities at site for use of all construction forces under the Contract. Newly-constructed or existing sanitary facilities may not be used by Contractor.

3.23 *ACCESS TO WORK AND TO INFORMATION*

3.23.1 Contractor shall provide the City, Design Consultant, testing laboratories, and governmental agencies which have jurisdictional interests, access to the Work in preparation and in progress wherever located. Contractor shall provide proper and safe conditions for the access.

3.23.2 If required by City Engineer, Contractor shall furnish information concerning character of Products and progress and manner of the Work, including information necessary to determine cost of the Work, such as number of employees, pay of employees, and time employees worked on various classes of the Work.

3.24 *TRADE SECRETS*

3.24.1 Contractor will not make any claim of ownership of trade secrets as to products used in the Work, or preparation of any mixture for the Work. City Engineer will at all times have the right to demand and Contractor shall furnish information concerning materials or samples of ingredients of any materials used, or proposed to be used, in preparation of concrete placed or other work to be done. Mixtures, once agreed on, shall not be changed in any manner without knowledge and consent of City Engineer. The City will make its best efforts to protect confidentiality of proprietary information.

3.25 *INDEMNIFICATION*

3.25.1 CONTRACTOR AGREES TO AND SHALL DEFEND, INDEMNIFY, AND HOLD THE CITY, ITS AGENTS, EMPLOYEES, OFFICERS, AND LEGAL REPRESENTATIVES (COLLECTIVELY THE "CITY") HARMLESS FOR ALL CLAIMS, CAUSES OF ACTION, LIABILITIES, FINES, AND EXPENSES (INCLUDING, WITHOUT LIMITATION, ATTORNEYS' FEES, COURT COSTS, AND ALL OTHER DEFENSE COSTS AND INTEREST) FOR INJURY, DEATH, DAMAGE, OR LOSS TO PERSONS OR PROPERTY SUSTAINED IN CONNECTION WITH OR INCIDENTAL TO PERFORMANCE UNDER THE CONTRACT INCLUDING, WITHOUT LIMITATION, THOSE CAUSED BY:

3.25.1.1 CONTRACTOR'S AND/OR ITS AGENTS', EMPLOYEES', OFFICERS', DIRECTORS', CONTRACTORS', OR SUBCONTRACTORS' (COLLECTIVELY IN NUMBERED SUBPARAGRAPHS .1 through .3, "CONTRACTOR") ACTUAL OR ALLEGED NEGLIGENCE OR INTENTIONAL ACTS OR OMISSIONS;

3.25.1.2 THE CITY'S AND CONTRACTOR'S ACTUAL OR ALLEGED CONCURRENT NEGLIGENCE, WHETHER CONTRACTOR IS IMMUNE FROM LIABILITY OR NOT;

3.25.1.3 THE CITY'S AND CONTRACTOR'S ACTUAL OR ALLEGED STRICT PRODUCTS LIABILITY OR STRICT STATUTORY LIABILITY, WHETHER CONTRACTOR IS IMMUNE FROM LIABILITY OR NOT.

CONTRACTOR SHALL DEFEND, INDEMNIFY, AND HOLD THE CITY HARMLESS DURING THE TERM OF THE CONTRACT AND FOR FOUR YEARS AFTER THE CONTRACT TERMINATES. CONTRACTOR SHALL NOT INDEMNIFY THE CITY FOR THE CITY'S SOLE NEGLIGENCE.

3.25.2 NOTWITHSTANDING ANYTHING TO THE CONTRARY, THE LIABILITY OF CONTRACTOR FOR THE CITY'S CONCURRENT NEGLIGENCE SHALL NOT EXCEED $1,000,000.

3.26 *RELEASE AND INDEMNIFICATION – PATENT, COPYRIGHT, TRADEMARK, AND TRADE SECRET INFRINGEMENT*

3.26.1 UNLESS OTHERWISE SPECIFICALLY REQUIRED BY THE CONTRACT, CONTRACTOR AGREES TO AND SHALL RELEASE AND DEFEND, INDEMNIFY, AND HOLD HARMLESS THE CITY, ITS AGENTS, EMPLOYEES, OFFICERS, AND LEGAL REPRESENTATIVES (COLLECTIVELY THE "CITY") FROM ALL CLAIMS OR CAUSES OF ACTION BROUGHT AGAINST THE CITY BY ANY PARTY, INCLUDING CONTRACTOR, ALLEGING THAT THE CITY'S USE OF ANY EQUIPMENT, SOFTWARE, PROCESS, OR DOCUMENTS CONTRACTOR FURNISHES DURING THE TERM OF THE CONTRACT INFRINGES ON A PATENT, COPYRIGHT, OR TRADEMARK, OR MISAPPROPRIATES A TRADE SECRET. CONTRACTOR SHALL PAY ALL COSTS (INCLUDING, WITHOUT LIMITATION, ATTORNEYS' FEES, COURT COSTS, AND ALL OTHER DEFENSE COSTS, AND INTEREST) AND DAMAGES AWARDED.

3.26.2 CONTRACTOR SHALL NOT SETTLE ANY CLAIM ON TERMS WHICH PREVENT THE CITY FROM USING THE EQUIPMENT, SOFTWARE, PROCESS, OR PRODUCT WITHOUT THE CITY ENGINEER'S PRIOR WRITTEN CONSENT.

3.26.3 UNLESS OTHERWISE SPECIFICALLY REQUIRED BY THE CONTRACT, WITHIN 60 DAYS AFTER BEING NOTIFIED OF THE CLAIM, CONTRACTOR SHALL, AT ITS OWN EXPENSE, EITHER:

3.26.3.1 OBTAIN FOR THE CITY THE RIGHT TO CONTINUE USING THE EQUIPMENT, SOFTWARE, PROCESS, OR PRODUCT, OR

3.26.3.2 IF BOTH PARTIES AGREE, REPLACE OR MODIFY THEM WITH COMPATIBLE AND FUNCTIONALLY EQUIVALENT PRODUCTS.

IF NONE OF THESE ALTERNATIVES IS REASONABLY AVAILABLE, THE CITY MAY RETURN THE EQUIPMENT, SOFTWARE, OR PRODUCT, OR DISCONTINUE THE PROCESS, AND CONTRACTOR SHALL REFUND THE PURCHASE PRICE.

3.27 *INDEMNIFICATION PROCEDURES*

3.27.1 *Notice of Indemnification Claims:* If the City or Contractor receives notice of any claim or circumstances which could give rise to an indemnified loss, the receiving party shall give written notice to the other Party within 10 days. The notice must include the following:

3.27.1.1 a description of the indemnification event in reasonable detail,

3.27.1.2 the basis on which indemnification may be due, and

3.27.1.3 the anticipated amount of the indemnified loss.

This notice does not estop or prevent the City from later asserting a different basis for indemnification or a different amount of indemnified loss than that indicated in the initial notice. If the City does not provide this notice within the 10-day period, it does not waive any right to indemnification except to the extent that Contractor is prejudiced, suffers loss, or incurs expense because of the delay.

3.27.2 *Defense of Indemnification Claims:*

3.27.2.1 *Assumption of Defense:* Contractor may assume the defense of the claim at its own expense with counsel chosen by it that is reasonably satisfactory to the City. Contractor shall then control the defense and any negotiations to settle the claim. Within 10 days after receiving written notice of the indemnification request, Contractor must advise the City as to whether or not it will defend the claim. If Contractor does not assume the defense, the City shall assume and control the defense, and all defense expenses constitute an indemnified loss.

3.27.2.2 *Continued Participation:* If Contractor elects to defend the claim, the City may

retain separate counsel to participate in, but not control, the defense and to participate in, but not control, any settlement negotiations. Contractor may settle the claim without the consent or agreement of the City, unless it:

3.27.2.2.1 would result in injunctive relief or other equitable remedies or otherwise require the City to comply with restrictions or limitations that adversely affect the City;

3.27.2.2.2 would require the City to pay amounts that Contractor does not fund in full; or

3.27.2.2.3 would not result in the City's full and complete release from all liability to the plaintiffs or claimants who are parties to or otherwise bound by the settlement.

3.28 ***CONTRACTOR DEBT***

IF CONTRACTOR, AT ANY TIME DURING THE TERM OF THIS AGREEMENT, INCURS A DEBT, AS THE WORD IS DEFINED IN SECTION 15-122 OF THE HOUSTON CITY CODE OF ORDINANCES, IT SHALL IMMEDIATELY NOTIFY CITY CONTROLLER IN WRITING. IF CITY CONTROLLER BECOMES AWARE THAT CONTRACTOR HAS INCURRED A DEBT, IT SHALL IMMEDIATELY NOTIFY CONTRACTOR IN WRITING. IF CONTRACTOR DOES NOT PAY THE DEBT WITHIN 30 DAYS OF EITHER SUCH NOTIFICATION, CITY CONTROLLER MAY DEDUCT FUNDS IN AN AMOUNT EQUAL TO THE DEBT FROM ANY PAYMENTS OWED TO CONTRACTOR UNDER THIS AGREEMENT, AND CONTRACTOR WAIVES ANY RECOURSE THEREFOR. CONTRACTOR SHALL FILE A NEW AFFIDAVIT OF OWNERSHIP, USING THE FORM DESIGNATED BY CITY, BETWEEN FEBRUARY 1 AND MARCH 1 OF EVERY YEAR DURING THE TERM OF THE CONTRACT.

ARTICLE 4 - ADMINISTRATION OF THE CONTRACT

4.1 *CONTRACT ADMINISTRATION*

4.1.1 City Engineer will provide administration of the Contract and City Engineer is authorized to issue Change Orders, Work Change Directives, and Minor Changes in the Work.

4.1.2 City Engineer may act through Project Manager, Design Consultant, or Inspector. When the term "City Engineer" is used in the Contract, action by City Engineer is required unless City Engineer delegates his authority in writing. The City Engineer may not delegate authority to render decisions under Section 4.4.

The City does not have control over or charge of, and is not responsible for, supervision, construction, and safety procedures enumerated in Section 3.3. The City does not have control over or charge of and is not responsible for acts or omissions of Contractor, Subcontractors, or Suppliers.

4.1.3 The City and Design Consultant may attend project meetings and visit the site to observe progress and quality of the Work. The City and Design Consultant are not required to make exhaustive or continuous on-site inspections to check quality or quantity of the Work.

4.1.4 Project Manager will review and approve or take other appropriate action on Contractor's submittals, but only for limited purpose of checking for conformance with information given and design concept expressed in the Contract.

4.1.5 Project Manager's review of the submittals is not conducted for purpose of determining accuracy and completeness of other details, such as dimensions and quantities, or for substantiating instructions for installation or performance of Products, all of which remain the responsibility of Contractor.

4.1.6 Project Manager's review of submittals does not relieve Contractor of its obligations under Sections 3.3, 3.12, and 3.18. Review does not constitute approval of safety precautions or, unless otherwise specifically stated by Project Manager in writing, of construction means, methods, techniques, sequences, or procedures. Project Manager's review of a specific item does not indicate approval of an assembly of which the item is a component.

4.1.7 Based on field observations and evaluations, Project Manager will process Contractor's progress payments, certify amounts due Contractor, and issue Certificates for Payment in the amount certified.

4.1.8 Project Manager will receive and forward to City Engineer for his review and records, written warranties and related documents required by the Contract and assembled by Contractor.

4.1.9 Upon written request by Contractor or Project Manager, City Engineer will resolve matters of interpretation of or performance of the Contract, which are not Claims. City Engineer's decisions are final and binding on the Parties.

4.1.10 City Engineer may reject work which does not conform to the Contract.

4.1.11 When City Engineer considers it necessary to implement the intent of the Contract, City Engineer may require additional inspection or testing of work in accordance with Paragraphs 13.6.3 and 13.6.4, whether such work is fabricated, Installed, or completed.

4.2 *COMMUNICATIONS IN ADMINISTRATION OF THE CONTRACT*

4.2.1 Except as otherwise provided in the Contract or when authorized by City Engineer in writing, Contractor shall communicate with Project Manager. Contractor shall communicate with Design Consultant, Design Consultant's subconsultants, and separate contractors through Project Manager. The City will communicate with Subcontractors and Suppliers through Contractor.

4.3 *CLAIMS AND DISPUTES*

4.3.1 *Documentation by Project Manager:* Contractor shall submit Claims, including those alleging an error or omission by Project Manager or Design Consultant, to Project Manager for documentation and recommendation to City Engineer.

4.3.2 *Decision of City Engineer:* Upon submission of Claim by Project Manager or Contractor, City Engineer will resolve Claims in accordance with Section 4.4.

4.3.3 *Time Limits on Claims:* Claims by Contractor must be made within 90 days after occurrence of event giving rise to the Claim.

4.3.4 *Continuing the Contract Performance:* Pending final resolution of a Claim including referral to non-binding mediation, unless otherwise agreed in writing, Contractor shall proceed diligently with the performance of the Contract and the City will continue to make payments in accordance with the Contract.

4.3.4.1 Pending final resolution of a Claim including referral to non-binding mediation, Contractor is responsible for safety and protection of physical properties and conditions at site.

4.3.5 *Claims for Concealed or Unknown Conditions:* Concealed or unknown physical conditions include utility lines, other man-made structures, storage facilities, Pollutants and Pollutant Facilities, and the like, but do not include conditions arising from Contractor operations, or failure of Contractor to properly protect and safeguard subsurface facilities. Concealed conditions also include naturally-occurring soil conditions outside the range of soil conditions identified through geotechnical investigations, but do not include conditions arising from groundwater, rain, or flood.

4.3.5.1 If conditions are encountered at the site which are Underground Facilities or otherwise concealed or unknown conditions which differ materially from:

4.3.5.1.1 those indicated by the Contract; or

4.3.5.1.2 conditions which Contractor could have discovered through site inspection, geotechnical testing, or otherwise;

then Contractor will give written notice to City Engineer no later than five days after Contractor's first observation of the condition and before condition is disturbed. Contractor's failure to provide notice constitutes a waiver of a Claim.

4.3.5.2 City Engineer will promptly investigate concealed or unknown conditions. If City Engineer determines that conditions at the site are not materially different and that no change in Contract Price or Contract Time is justified, City Engineer will notify Contractor in writing, stating reasons. If City Engineer determines the conditions differ materially and cause increase or decrease in Contractor's cost or time required for performance of part of the Work, City Engineer will recommend an adjustment in Contract Price or Contract Time, or both, as provided in Article 7. Opposition by a Party to the City Engineer's determination must be made within 21 days after City Engineer has given notice of the decision. If the Parties cannot agree on adjustment to Contract Price or Contract Time, adjustment is subject to further proceedings pursuant to Section 4.4.

4.3.6 *Claims for Additional Cost:* If Contractor wishes to make a Claim for increase in Contract Price, Contractor shall give written notice before proceeding with work for which Contractor intends to submit a Claim. Prior notice is not required for Claims relating to an emergency

endangering life or property arising under Section 10.4.

4.3.6.1 Contractor may file a Claim in accordance with Section 4.4 if Contractor believes it has incurred additional costs, for the following reasons:

- 4.3.6.1.1 written interpretation of City Engineer;
- 4.3.6.1.2 order by City Engineer to stop the Work when Contractor is not at fault;
- 4.3.6.1.3 suspension of the Work by City Engineer;
- 4.3.6.1.4 termination of the Contract by City Engineer; or
- 4.3.6.1.5 The City's non-compliance with another provision of the Contract.

4.3.6.2 No increase in Contract Price is allowed for delays or hindrances to the Work, except for direct and unavoidable extra costs to Contractor caused by failure of the City to provide information and services, or to make land and materials available, when required of the City under the Contract. Any increase claimed is subject to the provisions of Section 4.4 and Article 7.

4.3.6.3 The City is not liable for Claims for delay when Date of Substantial Completion occurs prior to expiration of Contract Time.

4.3.7 *Claims for Additional Time:* If Contractor wishes to make a Claim for an increase in Contract Time, Contractor shall give written notice as provided in Section 8.2. In case of continuing delay, only one Claim is necessary.

4.4 *RESOLUTION OF CLAIMS AND DISPUTES*

4.4.1 City Engineer will review Claims and take one or more of the following preliminary actions within 30 days of receipt of Claim:

- 4.4.1.1 submit a suggested time to meet and discuss the Claim with City Engineer;
- 4.4.1.2 reject Claim, in whole or in part, stating reasons for rejection;
- 4.4.1.3 recommend approval of the Claim by the other Party;
- 4.4.1.4 suggest a compromise; or
- 4.4.1.5 take other actions as City Engineer deems appropriate to resolve the Claim.

4.4.2 City Engineer may request additional supporting data from claimant. Party making Claim shall, within 10 days after receipt of City Engineer's request, submit additional supporting data requested by City Engineer.

4.4.3 At any time prior to rendering a written decision regarding a Claim, City Engineer may refer Claim to non-binding mediation. If Claim is resolved, City Engineer will prepare and obtain all appropriate documentation. If Claim is not resolved, City Engineer will take receipt of Claim and begin a new review under Section 4.4.

4.4.4 If Claim is not referred to or settled in non-binding mediation, City Engineer may conduct a hearing and will render a written decision, including findings of fact, within 75 days of receipt of Claim, or a time mutually agreed upon by the Parties in writing. City Engineer may notify Surety and request Surety's assistance in resolving Claim. City Engineer's decision is final and binding on the Parties.

4.5 *CONDITION PRECEDENT TO SUIT; WAIVER OF ATTORNEY FEES AND INTEREST*

4.5.1 Neither the City nor Contractor may recover attorney fees for any claim brought in connection with this Contract.

4.5.2 Neither the City nor the Contractor may recover interest for any damages claim brought in connection with this Contract except as allowed by TEXAS LOCAL GOVERNMENT CODE Chapter 2251.

4.6 *INTERIM PAYMENT WAIVER & RELEASE*

4.6.1 In accordance with section 4.3, the Contractor shall use due diligence in the discovery and submission of any Claim against the City related to the Contractor's work.

4.6.2 The Contractor shall submit any Claim to the City not later than the 90th day after the occurrence of the event giving rise to the Claim.

4.6.3 Any failure to timely comply with the requirements of section 4.6.2 waives and releases any Claim when the Contractor submits an application for payment after the 90th day.

4.6.4 This waiver does not cover any retainage. In case of any conflict of law, this language shall be revised to the minimum extent necessary to avoid legal conflict. This waiver is made specifically for the benefit of the City.

ARTICLE 5 - SUBCONTRACTORS AND SUPPLIERS

5.1 *AWARD OF SUBCONTRACTS OTHER CONTRACTS FOR PORTIONS OF THE WORK*

5.1.1 Contractor may not contract with a Subcontractor, Supplier, person, or entity that City Engineer has made a reasonable and timely objection to.

5.1.2 If City Engineer has a reasonable objection to person or entity proposed by Contractor, Contractor shall propose another with whom City Engineer has no reasonable objection.

5.1.3 Contractor shall execute contracts with approved Subcontractors, Suppliers, persons, or entities before the Subcontractors or Suppliers begin work under the Contract. All such contracts must be executed and sent to the OBO Director and Contracting Department within 30 days after the date of the Notice to Proceed and must include provisions set forth in Articles 3 and 5 of this Document.

5.1.4 Contractor shall notify City Engineer in writing of any proposed change of Subcontractor, Supplier, person, or entity previously accepted by the City.

5.1.5 Contractor shall make timely payments to Subcontractors and Suppliers for performance of the Contract. Contractor shall protect, defend, and indemnify the City from any claim or liability arising out of Contractor's failure to make the payments. Disputes relating to payment of Business Enterprise Subcontractors or Suppliers will be submitted to arbitration in same manner as other disputes under Business Enterprise subcontracts. Failure of Contractor to comply with decisions of arbitrator may be determined by City Engineer a material breach leading to termination of the Contract.

5.2 *CONTRACTOR RESPONSIBILITY FOR SUBCONTRACTORS*

5.2.1 Contractor is responsible to the City, as may be required by laws and regulations, for all acts and omissions of Subcontractors, Suppliers, and other persons and organizations performing or furnishing any of the Work under direct or indirect contract with Contractor.

5.2.2 Contractor shall make available to each proposed Subcontractor, prior to execution of subcontract, copies of the Contract to which Subcontractor is bound by this Section 5.2. Contractor shall notify Subcontractor of any terms of proposed subcontract which may be at variance with the Contract.

5.2.3 The City's approval of Subcontractor or Suppliers does not relieve Contractor of its obligation to perform, or to have performed to the full satisfaction of the City, the Work required by the Contract.

5.2.4 Unless there is a contractual relationship between Contractor and a Subcontractor or Supplier to the contrary, Contractor shall withhold no more retainage from Subcontractors or Suppliers than City withholds from Contractor under this Agreement. However, once a Subcontractor or Supplier completes performance, Contractor shall release all retainage to that Subcontractor or Supplier regardless if City continues to retain under this Agreement.

5.2.5 Prior to a Subcontractor or Supplier commencing performance for Contractor, Contractor shall meet with that Subcontractor or Supplier to provide instructions on invoicing procedures, dispute resolution procedures, and statutory rights, such as claim filing procedures under the McGregor Act. Subcontractors and Suppliers must certify to the City Engineer that Contractor has fulfilled the requirements of this Section.

ARTICLE 6 - CONSTRUCTION BY THE CITY OR BY SEPARATE CONTRACTORS

6.1 *THE CITY'S RIGHT TO PERFORM CONSTRUCTION AND TO AWARD SEPARATE CONTRACTS*

6.1.1 The City may perform on-site construction operations related to the Work and as part of the Project with the City's workforce or with separate contractors.

6.2 *COORDINATION*

6.2.1 The City will coordinate activities of the City's workforce and of each separate contractor with work of Contractor, and Contractor shall cooperate with the City and separate contractors.

6.2.1.1 Contractor shall participate with other separate contractors and the City in reviewing their construction schedules when directed to do so by the Project Manager. Contractor shall make revisions to construction schedule and Contract Price deemed

necessary after joint review and mutual agreement. Construction schedules shall then constitute schedules to be used by Contractor, separate contractors, and the City, until subsequently revised.

6.2.2 Contractor shall afford to the City and to separate contractors reasonable opportunity for introduction and storage of their materials and equipment, and for performance of their activities.

6.2.3 If part of Contractor's work depends on proper execution of construction or operations by the City or a separate contractor, Contractor shall, prior to proceeding with that portion of the Work, inspect the other work and promptly report to City Engineer apparent discrepancies or defects in the other construction that would render it unsuitable for the proper execution of the Work. Failure of Contractor to report apparent discrepancies or defects in the other construction shall constitute acknowledgment that the City's or separate contractor's completed or partially completed construction is fit and proper to receive Contractor's work, except as to discrepancies or defects not then reasonably discoverable.

6.3 *MUTUAL RESPONSIBILITY*

6.3.1 The responsible party bears the costs caused by delays, by improperly timed activities, or by nonconforming construction.

6.3.2 Contractor shall promptly remedy damage caused by Contractor to completed or partially completed construction or to property of the City or separate contractor.

6.3.3 Claims or disputes between Contractor and other City contractors, or subcontractors of other City contractors, working on the Project must be submitted to binding arbitration in accordance with Construction Industry Arbitration Rules of the American Arbitration Association upon demand by any party to the dispute or by the City.

6.4 *THE CITY'S RIGHT TO CLEAN UP*

6.4.1 If dispute arises among Contractor, separate contractors, and the City as to responsibility under their respective contracts for maintaining premises and surrounding area free from waste materials and rubbish as described in Section 3.21, the City may clean up and allocate cost among those responsible, as determined by City Engineer.

ARTICLE 7 - CHANGES IN THE WORK

7.1 *CHANGES*

7.1.1 Changes in scope of the Work, subject to limitations in Article 7 and elsewhere in the Contract, may be accomplished without invalidating the Contract, or without notifying Surety by:

- 7.1.1.1 Change Order;
- 7.1.1.2 Work Change Directive; or
- 7.1.1.3 Minor Change in the Work.

7.1.2 The following types of Change Orders require City Council approval:

- 7.1.2.1 a single Change Order that exceeds five percent of Original Contract Price,
- 7.1.2.2 a Change Order which, when added to previous Change Orders, exceeds five percent of Original Contract Price,
- 7.1.2.3 a Change Order, in which the total value of increases outside of the general scope of work approved by City Council, when added to increases outside the general scope of work approved by City Council in previous Change Orders, exceeds 40 percent of the Original Contract Price, even if the net increase to the Original Contract Price is five percent or less.

  In this context, "increase" means an increase in quantity resulting from the addition of locations not within the scope of work approved by City Council, or the addition of types of goods or services not bid as unit price items.

Nothing in this Section is intended to permit an increase of the Contract Price in excess of the limit set out in TEX. LOC. GOV'T CODE ANN. §252.048 or its successor statute.

7.1.3 Contractor shall proceed promptly to execute changes in the Work provided in Modifications, unless otherwise stated in the Modification.

7.2 *WORK CHANGE DIRECTIVES*

7.2.1 A Work Change Directive cannot change Contract Price or Contract Time, but is evidence that the Parties agree that a change, ordered by directive, will be incorporated in a subsequently issued Change Order as to its effect, if any, on Contract Price or Contract Time.

7.2.2 Failure by Contractor to commence work identified in a Work Change Directive within the time specified by City Engineer, or to complete the

work in a reasonable period of time, may be determined by City Engineer to be a material breach of Contract.

7.2.3 A Work Change Directive is used in the absence of total agreement of the terms of a Change Order. Interim payments are made in accordance with Paragraph 9.6.1.

7.2.4 If Contractor signs a Work Change Directive, then Contractor agrees to its terms including adjustment in Contract Price and Contract Time or method for determining them. Agreement by the Parties to adjustments in Contract Price and Contract Time are immediately recorded as a Change Order.

7.2.5 City Engineer, by Work Change Directive, may direct Contractor to take measures as necessary to expedite construction to achieve Date of Substantial Completion on or before expiration of Contract Time. When the Work is expedited solely for convenience of the City and not due to Contractor's failure to prosecute timely completion of the Work, then Contractor is entitled to an adjustment in Contract Price equal to actual costs determined in accordance with Article 7.

7.3 *ADJUSTMENTS IN CONTRACT PRICE*

7.3.1 Adjustments in Contract Price are accomplished by Change Order and are based on one of the following methods:

- 7.3.1.1 mutual acceptance of fixed price, properly itemized and supported by sufficient data to permit evaluation;
- 7.3.1.2 unit prices stated in the Contract or subsequently agreed upon;
- 7.3.1.3 cost to be determined in a manner agreed upon by the Parties and mutually acceptable fixed or percentage fee; or
- 7.3.1.4 as provided in Paragraph 7.3.2.

7.3.2 If Contractor does not agree with a change in Contract Price or Contract Time or the method for adjusting them specified in the Work Change Directive within 21 days from date of the Work Change Directive's issuance, method and adjustment are determined by City Engineer. If Project Manager or Contractor disagree with City Engineer's determination they then may file a Claim in accordance with Section 4.4.

7.3.2.1 If City Engineer determines a method and adjustment in Contract Price under Paragraph 7.3.2, Contractor shall provide, in a form as City Engineer may prescribe, appropriate supporting data for items submitted under Paragraph 7.3.2. Failure to submit the data within 21 days of request for the data by City Engineer shall constitute waiver of a Claim.

7.3.2.2 Unless otherwise provided in the Contract, costs for the purposes of this Paragraph 7.3.2 are limited to the following:

- 7.3.2.2.1 costs of labor, including labor burden as stated below for social security, unemployment insurance, customary and usual fringe benefits required by agreement or custom, and Workers' Compensation insurance;
  - 7.3.2.2..1.1 the maximum labor burden applied to costs of labor for changes in the Work is 55 percent;
- 7.3.2.2.2 costs of materials, supplies, and equipment, including cost of transportation, whether incorporated or consumed;
- 7.3.2.2.3 rental costs of machinery and equipment, exclusive of hand tools, whether rented from Contractor or others, with prior approval of City Engineer;
- 7.3.2.2.4 costs of premiums for Bonds and insurance and permit fees related to the change in the Work;
- 7.3.2.2.5 additional costs of direct supervision of work and field office personnel directly attributable to the change; and
- 7.3.2.2.6 allowances for overhead and profit as stated below.
  - 7.3.2.2.6.1 the maximum allowances for overhead and profit on increases due to Change Orders:
  - 7.3.2.2.6.2 for changes in the Work performed by Contractor and Subcontractors, allowance for overhead and profit are applied to an amount equal to cost of all additions less cost of all deletions to the Work. Allowance for overhead to Contractor and first tier Subcontractors on changes performed by Subcontractors are applied to an amount equal to the sum of all increases to the Work by applicable Subcontractors.

	Overhead	Profit
to Contractor for change in the Work performed by Subcontractors:	10 percent	0 percent
to first tier Subcontractors for change in the Work performed by its Subcontractors:	10 percent	0 percent
to Contractor and Subcontractor for change in the Work performed by their respective firms:	10 percent	5 percent

7.3.3 If the City deletes or makes a change, which results in a net decrease in Contract Price, the City is entitled to a credit calculated in accordance with Paragraphs 7.3.1 and 7.3.2 and Subparagraphs 7.3.2.1, and 7.3.2.2.1 through 7.3.2.2.5. When both additions and credits covering related work or substitutions are involved in a change, allowance for overhead and profit is figured on the basis of a net increase, if any, with respect to that change in accordance with Subparagraph 7.3.2.2.6.

7.3.4 When Contractor agrees with the determination made by City Engineer concerning adjustments in Contract Price and Contract Time, or the Parties otherwise reach agreement upon the adjustments, the agreement will be immediately recorded by Change Order.

7.4 *MINOR CHANGES IN THE WORK*

7.4.1 A Minor Change in Work is binding on the Parties. Contractor shall acknowledge, in a written form acceptable to City Engineer, that there is no change in Contract Time or Contract Price and shall carry out the written orders promptly.

ARTICLE 8 - TIME

8.1 *PROGRESS AND COMPLETION*

8.1.1 Time is of the essence in the Contract. By executing the Contract, Contractor agrees that Contract Time is a reasonable period for performing the Work.

8.1.2 *Computation of Time:* In computing any period of time prescribed or allowed by the General Conditions, the day of the act, event, or default after which designated period of time begins to run is not to be included. Last day of the period so computed is to be included, unless it is a Sunday or Legal Holiday, in which event the period runs until end of next day which is not a Sunday or Legal Holiday. Sundays and Legal Holidays are considered to be days and are to be included in all other time computations relative to Contract Time.

8.1.3 Contractor may not commence the Work prior to the effective date of insurance and Bonds required by Article 11.

8.1.4 Contractor shall proceed expeditiously and without interruption, with adequate forces, and shall achieve Date of Substantial Completion within Contract Time.

8.1.5 Should progress of the Work fall behind construction schedule, except for reasons stated in Paragraph 8.2.1, Contractor shall promptly submit at the request of Project Manager, updated construction schedule to City Engineer for approval. Contractor's failure to submit updated schedule may, at City Engineer's discretion, constitute a material breach of the Contract. Contractor shall take action necessary to restore progress by working the hours, including night shifts and lawful overtime operations as necessary, to achieve Date of Substantial Completion within Contract Time.

8.1.6 Except in connection with safety or protection of persons or the Work or property at the site or adjacent to the site, and except as otherwise indicated in the Contract, all the Work at the site will be performed Monday through Saturday between the hours of 7:00 a.m. and 7:00 p.m. Contractor may not perform work between 7:00 p.m. and 7:00 a.m., on a Sunday, or on a Legal Holiday, without giving City Engineer 24-hour prior written notice and receiving written consent of City Engineer.

8.2 *DELAYS AND EXTENSIONS OF TIME*

8.2.1 Contractor may request extension of Contract Time for a delay in performance of work that arises from causes beyond control and without fault or negligence of Contractor. Examples of these causes are:

- 8.2.1.1 acts of God or of the public enemy;
- 8.2.1.2 acts of government in its sovereign capacity;
- 8.2.1.3 fires;
- 8.2.1.4 floods;
- 8.2.1.5 epidemics;
- 8.2.1.6 quarantine restrictions;
- 8.2.1.7 strikes;
- 8.2.1.8 freight embargoes;
- 8.2.1.9 unusually severe weather; and
- 8.2.1.10 discovery of Pollutants or Pollutant Facilities at the site.

8.2.2 For any reason other than those listed in Section 4.3.6.2, if the Contractor's work is delayed in any manner or respect, the Contractor shall have no claim for damages and shall have no right of additional compensation from the City by reason of any delay or increased expense to the Contractor's work, except for an extension of time as provided in this provision.

8.2.3 Contractor may request an extension of Contract Time for delay only if:

8.2.3.1 delay is caused by failure of Subcontractor or Supplier to perform or make progress; and

8.2.3.2 cause of failure is beyond control of both Contractor and Subcontractor or Supplier.

8.2.4 Claims relating to Contract Time must be made in accordance with Paragraph 4.3.7.

8.2.5 Claims for extending or shortening Contract Time are based on written notice promptly delivered by the Party making Claim to other Party. Claim must accurately describe occurrence generating Claim, and a statement of probable effect on progress of the Work.

8.2.6 Claims for extension of Contract Time are considered only when a Claim is filed within the time limits stated in Paragraph 4.3.3.

8.2.6.1 Notwithstanding paragraph 4.3.3, an extension of time for delays under this paragraph may be granted only upon written application by the Contractor within 48 hours from the claimed delay.

8.2.7 Written notice of Claim must be accompanied by claimant's written statement that adjustment claimed is entire adjustment to which claimant is entitled as a result of the occurrence of the event. When the Parties cannot agree, Claims for adjustment in Contract Time are determined by City Engineer in accordance with Section 4.4.

8.2.8 Adjustments to Contract Time are accomplished by Change Order.

ARTICLE 9 - PAYMENTS AND COMPLETION

9.1 *UNIT PRICE WORK*

9.1.1 Where the Contract provides that all or part of the Work is based on Unit Prices, the Original Contract Price includes, for all Unit Price work, an amount equal to the sum of Unit Prices times Unit Price Quantities for each separately identified item of Unit Price work.

9.1.2 Each Unit Price includes an amount to cover Contractor's overhead and profit for each separately identified item.

9.1.3 The Contractor may not make a Claim against the City for excess or deficiency in Unit Price Quantities provided in the Contract, except as provided in Subparagraph 9.1.4. Payment at the prices stated in the Contract is in full for the completed work. Contractor is not entitled to additional payment for materials, supplies, labor, tools, machinery and all other expenditures incidental to satisfactory completion of the Work.

9.1.4 City Engineer may increase or decrease quantities of the Work within limitations stated in Paragraph 7.1.2. Contractor is entitled to payment for actual quantities of items provided at Unit Prices set forth in the Contract.

9.1.5 Where the final quantity of work performed by Contractor on Major Unit Price Work item differs by more than 25 percent from quantity of the item stated in the Contract, a Party may request an adjustment in Unit Price, for the portion that differs by more than 25 percent, by a Change Order under Section 7.3.

9.2 *ESTIMATES FOR PAYMENT, UNIT PRICE WORK*

9.2.1 Following the day of each month indicated in the Contract, Project Manager will prepare a Certificate for Payment for the preceding monthly period based on estimated units of work completed. Prior to preparing Certificate of Payment, Contractor shall have submitted to City Engineer, on a form approved by the Director of the Office of Business Opportunity, evidence satisfactory to the City Engineer of payments made to Subcontractors and Suppliers for the month preceding the month for which the Certificate for Payment is prepared, including evidence of electronic submission of certified payrolls.

9.2.2 Before final completion, City Engineer will review and confirm with Contractor the actual final installed Unit Price quantities. City Engineer's determination of actual final installed Unit Price quantities will be included in the final Certificate for Payment and any previous underpayments and overpayments will be reconciled with the actual final Unit Price quantities. Contractor shall file written notice of intent to appeal, if any, City Engineer's

determination within 10 days of receipt of final Certificate for Payment. Upon expiration of the 10-day period, City Engineer's decision is final and binding on the Parties. If Contractor submits notice within the 10-day period, Contractor shall submit a Claim in accordance with Section 4.4.

9.3 *STIPULATED PRICE WORK*

9.3.1 For work contracted on a Stipulated Price basis, 10 days before submittal of first Application for Payment, Contractor shall submit to City Engineer a Schedule of Values allocated to various portions of the Work, prepared in the form and supported by the data as City Engineer may require to substantiate its accuracy. This schedule, as approved by City Engineer, is used as a basis for approval of Contractor's Applications for Payment.

9.4 *APPLICATIONS FOR PAYMENT, STIPULATED PRICE WORK*

9.4.1 For work contracted on a Stipulated Price basis, Contractor shall submit Applications for Payment to City Engineer each month on a form acceptable to City Engineer in accordance with Schedule of Values. Application must indicate percentages of completion of each portion of the Work listed in Schedule of Values as of the end of the period covered by the Application for Payment.

9.4.2 Applications for Payment must be supported by substantiating data as City Engineer may require and must reflect retainages as provided below. Evidence satisfactory to the City Engineer of payments made to Subcontractors and Suppliers for the month preceding the month for which the Application for Payment is submitted must accompany each Application for Payment on a form approved by the Director of the Office of Business Opportunity. Evidence of electronic submission of certified payrolls must be included. Application must be sworn and notarized.

9.5 *CERTIFICATES FOR PAYMENT*

9.5.1 City Engineer will, within 10 days after the date specified in the Contract for Unit Price work, or upon receipt of Contractor's Application for Payment for Stipulated Price work, issue a Certificate for Payment for work based on amount which City Engineer determines is properly due, with copy to Contractor.

9.5.2 Unless otherwise provided in the Contract, payment for completed work and for properly stored Products is conditioned upon compliance with procedures satisfactory to City Engineer to protect the City's interests. Procedures will include applicable insurance, storage, and transportation to site for materials and equipment stored off-site. Contractor is responsible for maintaining materials and equipment until Date of Substantial Completion.

9.5.3 Contractor shall document its use of Ultra Low Sulfur Diesel Fuel by providing invoices and receipts evidencing Contractor's use.

9.6 *COMPUTATIONS OF CERTIFICATES FOR PAYMENT*

9.6.1 Subject to the provisions of the Contract, the amount of each Certificate for Payment is calculated as follows:

- 9.6.1.1 that portion of Contract Price allocated to completed work as determined by:
  - 9.6.1.1.1 multiplying the percentage of completion of each portion of the Work listed in the Schedule of Values by the value of that portion of the Work, or
  - 9.6.1.1.2 multiplying Unit Price quantities Installed times the Unit Prices listed in the Contract;
- 9.6.1.2 plus progress payments for completed work that has been properly authorized by Modifications;
- 9.6.1.3 less retainage of five percent;
- 9.6.1.4 plus actual costs, properly substantiated by certified copies of invoices and freight bills, of non-perishable materials and equipment delivered and properly stored, if approved in advance by Project Manager, less 15 percent;
- 9.6.1.5 less any previous payments by the City.

9.7 *DECISIONS TO WITHHOLD CERTIFICATION*

9.7.1 City Engineer may decline to certify payment and may withhold payment in whole or in part to the extent reasonably necessary to protect the City if, in City Engineer's opinion, there is reason to believe that:

- 9.7.1.1 nonconforming work has not been remedied;
- 9.7.1.2 the Work cannot be completed for unpaid balance of Contract Price;
- 9.7.1.3 there is damage to the City or another contractor;
- 9.7.1.4 the Work will not be completed within Contract Time and that unpaid balance

will not be adequate to cover actual and liquidated damages;

9.7.1.5 probable evidence that third party claims will be filed in court, in arbitration, or otherwise;

9.7.1.6 Contractor has failed to make payments to Subcontractors or Suppliers for labor, material, or equipment; or

9.7.1.7 Contractor has persistently failed to carry out work in accordance with the Contract.

9.7.1.8 Contractor has not paid Subcontractors or Suppliers because of a payment dispute; or

9.7.1.9 Contractor has failed to provide satisfactory evidence described in Paragraphs 9.2.1, 9.4.2, and 9.8.2.

9.7.2 When the above reasons for withholding certification are removed, certification will be made for amounts previously withheld.

9.7.3 City Engineer may decline to certify payment and may withhold request for payment in whole or in part upon failure of Contractor to submit initial construction schedule or monthly schedule updates, as required in Paragraphs 3.15.1 and 3.15.3.

9.8 *PROGRESS PAYMENTS*

9.8.1 The City will make payment, in an amount certified by City Engineer, within 20 days after City Engineer has issued a Certificate for Payment.

9.8.2 The City has no obligation to pay or to facilitate the payment to a Subcontractor or Supplier, except as may otherwise be required by law. Contractor shall comply with the prompt payment requirements of Chapter 2251 of the Government Code. State law requires payment of Subcontractors and Suppliers by Contractor within 7 calendar days of Contractor's receipt of payment from the City, unless there is a payment dispute between Contractor and a Subcontractor or Supplier evidenced on a form approved by the Director of Mayor's Office of Business Opportunity and submitted to the City Engineer each month with Application for Payment or Estimate for Payment. **CONTRACTOR SHALL DEFEND AND INDEMNIFY THE CITY FROM ANY CLAIMS OR LIABILITY ARISING OUT OF CONTRACTOR'S FAILURE TO MAKE THESE PAYMENTS.**

9.8.2.1 The City may, upon request and at the discretion of City Engineer, furnish to Subcontractor information regarding percentages of completion or the amounts applied for by Contractor, and action taken thereon by the City because of work done by the Subcontractor.

9.8.2.2 Contractor shall prepare and submit to City Engineer a Certification of Payment to Subcontractors and Suppliers form to be attached to each monthly Estimate for Payment or Application for Payment.

9.8.3 A Certificate for Payment, a progress payment, or partial or entire use or occupancy of the Work by the City, does not constitute acceptance of work which is not in accordance with the Contract.

9.9 *DATE OF SUBSTANTIAL COMPLETION*

9.9.1 When Contractor considers the Work, or a portion thereof designated by City Engineer, to be substantially complete, Contractor shall prepare and submit to Project Manager a comprehensive punch list of items to be completed or corrected. Failure to include an item on the punch list does not alter the responsibility of Contractor to comply with the Contract.

9.9.1.1 By submitting the punch list to Project Manager, Contractor represents that work on the punch list will be completed within the time provided for in Subparagraph 9.9.4.3.

9.9.2 Upon receipt of Contractor's punch list, Project Manager will inspect the Work, or designated portion thereof, to verify that the punch list contains all items needing completion or correction. If Project Manager's inspection discloses items not on Contractor's punch list, the items must be added to the punch list of items to be completed or corrected. If Project Manager's inspection reveals that Contractor is not yet substantially complete, Contractor shall complete or correct the deficiencies and request another inspection by Project Manager. The City may recover the costs of re-inspection from Contractor.

9.9.3 Prior to City Engineer's issuing a Certificate of Substantial Completion, Contractor shall also provide:

9.9.3.1 Certificate of Occupancy for new construction, or Certificate of Compliance for remodeled work, as applicable, and

9.9.3.2 compliance with Texas Accessibility Standards through state inspection of the Work, if required. If Contractor calls for inspection in a timely manner and the inspection is delayed through no fault of Contractor, and City Engineer so confirms, City Engineer may, upon request by Contractor, add the inspection to the punch list in Paragraph 9.9.2 and issue a Certificate of Substantial Completion.

9.9.4 When the Work, or designated portion thereof, is determined by City Engineer to be sufficiently complete in accordance with the Contract so the City can occupy or utilize the Work, or designated portion thereof, for the purpose for which it is intended, City Engineer will prepare a Certificate of Substantial Completion that incorporates the punch list in Paragraph 9.9.2 and establishes:

9.9.4.1 Date of Substantial Completion;

9.9.4.2 responsibilities of the Parties for security, maintenance, heating, ventilating and air conditioning, utilities, damage to the Work, and insurance; and

9.9.4.3 fixed time within which Contractor shall complete all items on punch list of items to be corrected accompanying the certificate.

9.9.5 Warranties required by the Contract shall commence on the Date of Substantial Completion unless otherwise provided by City Engineer in Certificate of Substantial Completion. Warranties may not commence on items not substantially completed.

9.9.6 After Date of Substantial Completion and upon application by Contractor and approval by City Engineer, the City may make payment, reflecting adjustment in retainage, if any, as follows:

9.9.6.1 with the consent of Surety, the City may increase payment to Contractor to 96 percent of Contract Price, less value of items to be completed and accrued liquidated damages.

9.9.7 Contractor shall complete or correct the items in Paragraph 9.9.2 within the time period set out in the Certificate of Substantial Completion. If Contractor fails to do so, the City may issue a Notice of Noncompliance and proceed according to Section 2.5.

9.10 *PARTIAL OCCUPANCY OR USE*

9.10.1 The City may occupy or use any completed or partially completed portion of the Work at any stage, provided the occupancy or use is consented to by Contractor and Contractor's insurer and authorized by public authorities having jurisdiction over the Work. Consent of Contractor to partial occupancy or use may not be unreasonably withheld.

9.10.2 Immediately prior to the partial occupancy or use, Project Manager and Contractor shall jointly inspect the area to be occupied or portion of the Work to be used to determine and record condition of the Work.

9.10.3 Partial occupancy or use of a portion of the Work does not constitute acceptance of work not in compliance with requirements of the Contract.

9.11 *FINAL COMPLETION AND FINAL PAYMENT*

9.11.1 Contractor shall review the Contract and inspect the Work prior to Contractor notification to City Engineer that the Work is complete and ready for final inspection. Contractor shall submit affidavit that the Work has been inspected and that the Work is complete in accordance with requirements of the Contract.

9.11.2 Project Manager will make final inspection within 15 days after receipt of Contractor's written notice that the Work is ready for final inspection and acceptance. If Project Manager finds the Work has been completed in accordance with the Contract, Contractor shall submit items set out in Paragraph 9.11.4 and, for stipulated price contracts, a final Application for Payment. City Engineer will, within 10 days, issue Certificate of Final Completion stating that to the best of City Engineer's knowledge, information, and belief, the Work has been completed in accordance with the Contract, and will recommend acceptance of the Work by City Council.

9.11.3 Should work be found not in compliance with requirements of the Contract, City Engineer will notify Contractor in writing of items of noncompliance. Upon inspection and acceptance of the corrections by Project Manager, compliance with all procedures of Paragraph 9.11.2, and Contractor's submission of the items set out in Paragraph 9.11.4, the City Engineer will issue Certificate of Final Completion to Contractor as provided in Paragraph 9.11.2.

9.11.4 Contractor shall submit the following items to City Engineer before City Engineer will issue a Certificate of Final Completion:

9.11.4.1 affidavit that payrolls, invoices for materials and equipment, and other indebtedness of Contractor connected

with the Work, less amounts withheld by the City, have been paid or otherwise satisfied. If required by City Engineer, Contractor shall submit further proof including waiver or release of lien or claims from laborers or Suppliers of Products;

9.11.4.2 certificate evidencing that insurance required by the Contract to remain in force after final payment is currently in effect, will not be canceled or materially changed until at least 30 days written notice has been given to the City;

9.11.4.3 written statement that Contractor knows of no substantial reason that insurance will not be renewable to cover correction and warranty period required by the Contract;

9.11.4.4 consent of Surety to final payment; and

9.11.4.5 copies of record documents, maintenance manuals, tests, inspections, and approvals.

Upon City Engineer's issuance of a Certificate of Final Completion, Contractor may request increase in payment to 99 percent of Contract Price, less accrued liquidated damages.

9.11.5 If Contractor fails to submit required items in Paragraph 9.11.4 within 10 days of Project Manager's inspection of the Work under Paragraph 9.11.2 or Paragraph 9.11.3, City Engineer may, but is not obligated to:

9.11.5.1 deduct liquidated damages accrued from monies held;

9.11.5.2 proceed to City Council for acceptance of the Work, minus some or all of the items Contractor fails to submit under Paragraph 9.11.4; and,

9.11.5.3 upon acceptance by City Council of the portion of the Work completed, make final payment as set out in Paragraph 9.11.8.

9.11.6 If final completion is materially delayed through no fault of Contractor, or by issuance of Change Orders affecting date of final completion, and City Engineer so confirms, the City may, upon application by Contractor and certification by City Engineer, and without terminating the Contract, make payment of balance due for that portion of the Work fully completed and accepted.

9.11.7 If remaining balance due for work not corrected is less than retainage stipulated in the Contract, Contractor shall submit to City Engineer written consent of Surety to payment of balance due for that portion of the Work fully completed and accepted, prior to certification of the payment. The payment is made under terms governing final payment, except that it does not constitute waiver of Claims.

9.11.8 The City will make final payment to Contractor within 30 days after acceptance of the Work by City Council, subject to limitations, if any, as stated in the Contract.

9.11.9 Acceptance of final payment by Contractor shall constitute a waiver of all Claims, whether known or unknown, by Contractor, except those previously made in writing and identified by Contractor as unsettled at time of final Application for Payment.

9.12 *LIQUIDATED DAMAGES*

9.12.1 Contractor, Surety, and the City agree that failure to complete the Work within Contract Time will cause damages to the City and that actual damages from harm are difficult to estimate accurately. Therefore, Contractor, Surety, and the City agree that Contractor and Surety are liable for and shall pay to the City the amount stipulated in Supplementary Conditions as liquidated damages, and that the amount of damages fixed therein is a reasonable forecast of just compensation for harm to the City resulting from Contractor's failure to complete the Work within Contract Time. The amount stipulated will be paid for each day of delay beyond Contract Time until Date of Substantial Completion.

9.12.2 Contractor shall pay the City an amount equal to $1,200.00 per diesel operating vehicle or piece of motorized equipment per incident of high sulfur diesel fuel usage.

ARTICLE 10 - SAFETY PRECAUTIONS

10.1 *SAFETY PROGRAMS*

10.1.1 Contractor is responsible for initiating, maintaining, and supervising all safety precautions and programs in connection with performance of the Contract. Contractor shall submit a safety program to City Engineer prior to mobilizing for the Work, and is solely responsible for safety, efficiency, and adequacy of ways, means, and methods, and for damage which might result from failure or improper construction, maintenance, or operation performed by Contractor.

10.2 *POLLUTANTS AND POLLUTANT FACILITIES*

10.2.1 If Contractor encounters material on-site which it reasonably believes to be a Pollutant or facilities which it reasonably believes to be a Pollutant Facility, Contractor shall immediately stop work in affected area and immediately notify City Engineer, confirming the notice thereafter in writing.

10.2.2 If City Engineer determines that the material is a Pollutant or facility is a Pollutant Facility, work in affected area may not be resumed except by Modification, and only if the work would not violate applicable laws or regulations.

10.2.3 If City Engineer determines that the material is not a Pollutant or a facility is not a Pollutant Facility, work in affected area will be resumed upon issuance of a Modification.

10.2.4 Contractor is not required to perform, unless authorized by Change Order, work relating to Pollutants or Pollutant Facilities except for that work relating to Pollutants or Pollutant Facilities specified in the Contract.

10.3 *SAFETY OF THE ENVIRONMENT, PERSONS, AND PROPERTY*

10.3.1 Contractor shall take reasonable precautions for safety and shall provide reasonable protection to prevent damage, injury, or loss from all causes, to:

10.3.1.1 employees performing work on-site, and other persons who may be affected thereby;

10.3.1.2 work, including Products to be incorporated into the Work, whether in proper storage, under control of Contractor or Subcontractor; and

10.3.1.3 other property at or adjacent to the site, such as trees, shrubs, lawns, walks, pavements, roadways, structures, utilities, and Underground Facilities not designated for removal or replacement in course of construction.

10.3.2 Contractor shall give notices and comply with applicable laws, ordinances, rules, regulations, and lawful orders of public authorities bearing on safety of persons, property, or environment.

10.3.2.1 Contractor shall comply with requirements of Underground Facility Damage Prevention and Safety Act TEX. UTIL. CODE ANN. Ch. 251 (Vernon Supp. 2002).

10.3.2.2 Contractor shall comply with all safety rules and regulations of the Federal Occupational Health and Safety Act of 1970 and subsequent amendments (OSHA).

10.3.3 Contractor shall erect and maintain, as required by existing conditions and performance of the Contract, reasonable safeguards for safety and protection of persons and property, including posting danger signs and other warnings against hazards, promulgating safety regulations, and notifying owners and users of adjacent sites and utilities.

10.3.4 Contractor shall designate responsible member of Contractor's organization at site whose duty is prevention of accidents. This person will be Contractor's Superintendent unless otherwise designated by Contractor in writing to City Engineer.

10.3.5 Contractor shall prevent windblown dust and may not burn or bury trash debris or waste products on-site. Contractor shall prevent environmental pollution, including but not limited to particulates, gases and noise, as a result of the Work.

10.3.6 When use or storage of hazardous materials or equipment, or unusual methods are necessary for execution of the Work, Contractor shall exercise utmost care and carry on the activities under supervision of properly qualified personnel.

10.3.7 Contractor shall promptly remedy damage and loss to property referred to in Subparagraphs 10.3.1.2 and 10.3.1.3, caused in whole or in part by Contractor, or Subcontractors, which is not covered by insurance required by the Contract. Contractor is not required to remedy damage or loss attributable to the City, Design Consultant, or other contractors.

10.4 *EMERGENCIES*

10.4.1 In emergencies affecting safety of persons or property, Contractor shall act at Contractor's discretion to prevent imminent damage, injury, or loss. Additional compensation or extension of time claimed by Contractor because of emergencies are determined as provided in Article 7.

ARTICLE 11 - INSURANCE AND BONDS

11.1 *GENERAL INSURANCE REQUIREMENTS*

11.1.1 With no intent to limit Contractor's liability under indemnification provisions set forth in Paragraphs 3.25 and 3.26, Contractor shall provide and maintain in full force and effect during term of the Contract and all extensions and amendments thereto, at least the following insurance and available limits of liability.

11.1.2 If any of the following insurance is written as "claims made" coverage and the City is required to be carried as additional insured, then Contractor's insurance shall include a two-year extended discovery period after last date that Contractor provides any work under the Contract.

11.1.3 Aggregate amounts of coverage, for purposes of the Contract, are agreed to be amounts of coverage available during fixed 12-month policy period.

11.2 *INSURANCE TO BE PROVIDED BY CONTRACTOR*

11.2.1 *Risks and Limits of Liability:* Contractor shall maintain the insurance coverages in the listed amounts, as set out in Table 1.

11.2.2 If Limit of Liability for Excess Coverage is $2,000,000 or more, Limit of Liability for Employer's Liability may be reduced to $500,000.

11.2.3 *Insurance Coverage*: At all times during the term of this Contract and any extensions or renewals, Contractor shall provide and maintain insurance coverage that meets the Contract requirements. Prior to beginning performance under the Contract, at any time upon the Director's request, or each time coverage is renewed or updated, Contractor shall furnish to the Director current certificates of insurance, endorsements, all policies, or other policy documents evidencing adequate coverage, as necessary. Contractor shall be responsible for and pay (a) all premiums and (b) any claims or losses to the extent of any deductible amounts. Contractor waives any claim it may have for premiums or deductibles against the City, its officers, agents, or employees. Contractor shall also require all subcontractors or consultants whose subcontracts exceed $100,000 to provide proof of insurance coverage meeting all requirements stated above except amount. The amount must be commensurate with the amount of the subcontract, but no less than $500,000 per claim.

11.2.4 *Form of insurance*: The form of the insurance shall be approved by the Director and the City Attorney; such approval (or lack thereof) shall never (a) excuse non-compliance with the terms of this Section, or (b) waive or estop the City from asserting its rights to terminate this Contract. The policy issuer shall (1) have a Certificate of Authority to transact insurance business in Texas, or (2) be an eligible non-admitted insurer in the State of Texas and have a Best's rating of at least B+, and a Best's Financial Size Category of Class VI or better, according to the most current Best's Key Rating Guide. Each insurer is subject to approval by City Engineer in City Engineer's sole discretion as to conformance with these requirements.

11.2.5 *Required Coverage*: The City shall be an Additional Insured under this Contract, and all policies except Professional Liability and Worker's Compensation must name the City as an Additional Insured. Contactor waives any claim or right of subrogation to recover against the City, its officers, agents, or employees, and each of Contractor's insurance policies except professional liability must contain coverage waiving such claim. Each policy, except Workers' Compensation and Professional Liability, must also contain an endorsement that the policy is primary to any other insurance available to the Additional Insured with respect to claims arising under this Contract. If professional liability coverage is written on a "claims made" basis, Contractor shall also provide proof of renewal each year for two years after substantial completion of the Project, or in the alternative: evidence of extended reporting period coverage for a period of two years after substantial completion, or a project liability policy for the Project covered by this Contract with a duration of two years after substantial completion.

11.2.6 *Deductibles:* Contractor assumes and bears any claims or losses to extent of deductible amounts and waives any claim it may ever have for same against the City, its officers, agents, or employees.

11.2.7 *Notice*: **CONTRACTOR SHALL GIVE 30 DAYS' ADVANCE WRITTEN NOTICE TO THE DIRECTOR IF ANY OF ITS INSURANCE POLICIES ARE CANCELED OR NON-RENEWED**. Within the 30-day period, Contractor shall provide other suitable policies in order to maintain the required coverage. If Contractor does not comply with this requirement, the Director, at his or her sole discretion, may immediately suspend Contractor from any further performance under this Agreement and begin procedures to terminate for default.

11.2.8 *Subrogation:* Contractor waives any claim or right of subrogation to recover against the City, its officers, agents, or employees. Each policy,

except professional liability, must contain an endorsement waiving such claim.

11.2.9 *Endorsement of Primary Insurance:* Each policy, except Workers' Compensation policies, must contain an endorsement that the policy is primary insurance to any other insurance available to additional insured with respect to claims arising hereunder.

11.2.10 *Liability for Premium:* Contractor is solely responsible for payment of all insurance premium requirements hereunder and the City is not obligated to pay any premiums.

11.2.11 *Additional Requirements for Workers' Compensation Insurance Coverage:* Contractor shall, in addition to meeting the obligations set forth in Table 1, maintain throughout the term of the Contract Workers' Compensation coverage as required by statute, and Contractor shall specifically comply with requirements set forth in Paragraph 11.2.10. The definitions set out below shall apply only for purposes of this Paragraph 11.2.10.

11.2.12 Definitions:

11.2.12.1 *Certificate of Coverage:* A copy of certificate of insurance, or coverage agreement (TWCC-81, TWCC-82, TWCC-83, or TWCC-84), showing statutory Workers' Compensation insurance coverage for Contractor's, Subcontractor's, or Supplier's employees providing services for the duration of the Contract.

11.2.12.2 *Duration of the Work:* Includes the time from Date of Commencement of the Work until Contractor's work under the Contract has been completed and accepted by City Council.

11.2.12.3 *Persons providing services for the Work (Subcontractor in Texas Labor Code § 406.096):* includes all persons or entities performing all or part of services Contractor has undertaken to perform on the Work, regardless of whether that person contracted directly with Contractor and regardless of whether that person has employees. This includes, without limitation, independent contractors, subcontractors, leasing companies, motor carriers, owner-operators, employees of the entity, or employees of entity which furnishes persons to provide services on the Work. Services include, without limitation, providing, hauling, or delivering equipment or materials, or providing labor, transportation, or other service related to the Work. Services do not include activities unrelated to the Work, such as food/beverage vendors, office supply deliveries, and delivery of portable toilets.

11.2.13 Contractor shall provide coverage, based on proper reporting of classification codes and payroll amounts and filing of coverage agreements, which meets the statutory requirements of TEX. LAB. CODE ANN., Section 401.011(44) for employees of Contractor providing services on the Work, for duration of the Work.

11.2.14 Contractor shall provide a Certificate of Coverage to the City prior to being awarded the Contract.

11.2.15 If coverage period shown on Contractor's original Certificate of Coverage ends during duration of the Work, Contractor shall file new Certificate of Coverage with the City showing that coverage has been extended.

11.2.16 Contractor shall obtain from each person providing services on the Work, and provide to City Engineer:

11.2.16.1 Certificate of Coverage, prior to that person beginning work on the Work, so the City will have on file Certificates of Coverage showing coverage for all persons providing services on the Work; and

11.2.16.2 no later than seven days after receipt by Contractor, new Certificate of Coverage showing extension of coverage, if coverage period shown on current Certificate of Coverage ends during the duration of the Work.

11.2.17 Contractor shall retain all required Certificates of Coverage for the duration of the Work and for one year thereafter.

11.2.18 Contractor shall notify City Engineer in writing by certified mail or personal delivery, within 10 days after Contractor knew or should have known, of any change that materially affects provision of coverage of any person providing services on the Work.

11.2.19 Contractor shall post on-site a notice, in text, form and manner prescribed by Texas Workers'

Compensation Commission, informing all persons providing services on the Work that they are required to be covered, and stating how person may verify coverage and report lack of coverage.

11.2.20 Contractor shall contractually require each person with whom it contracts to provide services on the Work to:

11.2.20.1 provide coverage, based on proper reporting of classification codes, payroll amounts and filing of any coverage agreements, which meets statutory requirements of TEX. LAB. CODE ANN., Section 401.011(44) for all its employees providing services on the Work, for the duration of the Work;

11.2.20.2 provide to Contractor, prior to that person's beginning work on the Work, a Certificate of Coverage showing that coverage is being provided for all employees of the person providing services on the Work, for the duration of the Work;

11.2.20.3 provide Contractor, prior to the end of the coverage period, a new Certificate of Coverage showing extension of coverage, if the coverage period shown on the current Certificate of Coverage ends during the duration of the Work;

11.2.20.4 obtain from each other person with whom it contracts, and provide to Contractor: (1) Certificate of Coverage, prior to other person's beginning work on the Work; and (2) new Certificate of Coverage showing extension of coverage, prior to end of coverage period, if coverage period shown on the current Certificate of Coverage ends during duration of the Work.

11.2.20.5 retain all required Certificates of Coverage on file for the duration of the Work and for one year thereafter;

11.2.20.6 notify City Engineer in writing by certified mail or personal delivery within 10 days after person knew, or should have known, of change that materially affects provision of coverage of any person providing services on the Work; and

11.2.20.7 contractually require each person with whom it contracts to perform as required by Paragraphs 11.2.10.1 through 11.2.10.7, with Certificates of Coverage to be provided to person for whom they are providing services.

11.2.21 By signing the Contract or providing or causing to be provided a Certificate of Coverage, Contractor is representing to the City that all employees of Contractor who will provide services on the Work will be covered by Workers' Compensation coverage for the duration of the Work, that coverage will be based on proper reporting of classification codes and payroll amounts, and that all coverage agreements will be filed with appropriate insurance carrier. Contractor is not allowed to self-insure Workers' Compensation. Contractor may be subject to administrative penalties, criminal penalties, civil penalties, or other civil actions for providing false or misleading information.

11.2.22 Contractor's failure to comply with Paragraph 11.2.10 is a breach of the Contract by Contractor, which entitles the City to declare the Contract void if Contractor does not remedy breach within 10 days after receipt of notice of breach from City Engineer.

11.2.23 *Subcontractor Insurance Requirements:* Contractor shall require Subcontractors and Suppliers to obtain Commercial General Liability, Workers' Compensation, Employer's Liability and Automobile Liability coverage that meets all the requirements of Paragraph 11.2. The amount must be commensurate with the amount of the subcontract, but not less than $500,000 per occurrence. Contractor shall require all Subcontractors with whom it contracts directly, whose subcontracts exceed $100,000, to provide proof of Commercial General Liability and Automobile Liability insurance coverage meeting the above requirements. Contractor shall comply with all requirements set out under Paragraph 11.2.10 as to Workers' Compensation Insurance for all Subcontractors and Suppliers.

REQUIRED COVERAGE

(Coverage)	(Limit of Liability)
.1 Workers' Compensation	• Statutory Limits for Workers' Compensation
.2 Employer's Liability	• Bodily Injury by Accident $1,000,000 (each accident) • Bodily Injury by Disease $1,000,000 (policy limit) • Bodily Injury by Disease $1,000,000 (each employee)
.3 Commercial General Liability: Including Contractor's Protective, Broad Form Property Damage, Contractual Liability, Explosion, Underground and Collapse, Bodily Injury, Personal Injury, Products, and Completed Operations (for a period of one year following completion of the Work).	• Combined single limit of $1,000,000 (each occurrence), subject to general aggregate of $1,000,000; • Products and Completed Operations $1,000,000 aggregate.
.4 Owner's and Contractor's Protective Liability	• $1,000,000 combined single limit each Occurrence/ aggregate
.5 Installation Floater (Unless alternative coverage approved by City Attorney)	• Value of stored material or equipment, listed on Certificates of Payments, but not yet incorporated into the Work
.6 Automobile Liability Insurance: (For automobiles furnished by Contractor in course of his performance under the Contract, including Owned, Non-owned, and Hired Auto coverage)	• $1,000,000 combined single limit each occurrence for (1) Any Auto or (2) All Owned, Hired, and Non-Owned Autos
.7 Excess Coverage	• $1,000,000 each occurrence/combined aggregate in excess of limits specified for Employer's Liability, Commercial General Liability, and Automobile Liability
Aggregate Limits are per 12-month policy period unless otherwise indicated.	

11.3 *PROOF OF INSURANCE*

11.3.1 Prior to commencing services and at time during the term of the Contract, Contractor shall furnish City Engineer with Certificates of Insurance, along with Affidavit from Contractor confirming that Certificate accurately reflects insurance coverage that is available during term of the Contract. If requested in writing by City Engineer, Contractor shall furnish City Engineer with certified copies of Contractor's actual insurance policies. Failure of Contractor to provide certified copies, as requested, may be deemed, at City Engineer's or City Attorney's discretion, a material breach of the Contract.

11.3.2 Notwithstanding the proof of insurance requirements, Contractor shall continuously maintain in effect required insurance coverage set forth in Paragraph 11.2. Failure of Contractor to comply with this requirement does constitute a material breach by Contractor allowing the City, at its option, to immediately suspend or terminate work, or exercise any other remedy allowed under the Contract. Contractor agrees that the City has not waived or is not estopped to assert a material breach of the Contract because of any acts or omissions by the City regarding its review or non-review of insurance documents provided by Contractor, its agents, employees, or assigns.

11.3.3 Contractor shall provide updated certificates of insurance to the Director upon request. The Contractor shall be responsible for delivering a current certificate of insurance in the proper form to the Director as long as Contractor is required to furnish insurance coverage under Paragraph 11.2.

11.3.4 Every certificate of insurance Contractor delivers in connection with this Contract shall

11.3.4.1 be less than 12 months old;

11.3.4.2 include all pertinent identification information for the Insurer, including the company name and address, policy

number, NAIC number or AMB number, and authorized signature;

11.3.4.3 include in the Certificate Holder Box the Project name and reference numbers, contractor's email address, and indicates the name and address of the Project Manager;

11.3.4.4 include the Contractor's email address in the Certificate Holder Box;

11.3.4.5 include the Project reference numbers on the City address so the Project reference number is visible in the envelope window; and

11.3.4.6 be appropriately marked to accurately identify all coverages and limits of the policy, effective and expiration dates, and waivers of subrogation in favor of the City for Commercial General Liability, Automobile Liability, and Worker's Compensation/Employers' Liability.

11.4 *PERFORMANCE AND PAYMENT BONDS*

11.4.1 For Contracts over the value of $25,000, Contractor shall provide Bonds on the City's standard forms covering faithful performance of the Contract and payment of obligations arising thereunder as required in the Contract pursuant to Chapter 2253 of the Government Code. The Bonds must be for 100 percent of Original Contract Price and in accordance with conditions stated on standard City Performance and Payment Bond and Statutory Payment Bond forms. Bonds may be obtained from Contractor's usual source and cost for the Bonds are included in Contract Price.

11.5 *MAINTENANCE BONDS*

11.5.1 *One-year Maintenance Bond:* Contractor shall provide Bond on standard City One-year Maintenance Bond form, providing for Contractor's correction, replacement, or restoration of any portion of the Work which is found to be not in compliance with requirements of the Contract during one-year correction period required in Paragraph 12.2. The Maintenance Bond must be for 100 percent of the Original Contract Price.

11.6 *SURETY*

11.6.1 A Bond that is given or tendered to the City pursuant to the Contract must be executed by a surety company that is authorized and admitted to write surety Bonds in the State of Texas.

11.6.2 If a Bond is given or tendered to the City pursuant to the Contract in an amount greater than 10 percent of Surety's capital and surplus, Surety shall provide certification that Surety has reinsured that portion of the risk that exceeds 10 percent of Surety's capital and surplus. The reinsurance must be with one or more reinsurers who are duly authorized, accredited, or trusted to do business in the State of Texas. The amount reinsured by reinsurer may not exceed 10 percent of reinsurer's capital and surplus. The amount of allowed capital and surplus must be based on information received from State Board of Insurance.

11.6.3 If the amount of a Bond is greater than $100,000, Surety shall:

11.6.3.1 also hold certificate of authority from the United States Secretary of Treasury to qualify as surety on obligations permitted or required under federal law; or,

11.6.3.2 Surety may obtain reinsurance for any liability in excess of $100,000 from reinsurer that is authorized and admitted as a reinsurer in the State of Texas and is the holder of a certificate of authority from the United States Secretary of the Treasury to qualify as surety or reinsurer on obligations permitted or required under federal law.

11.6.4 Determination of whether Surety on the Bond or the reinsurer holds a certificate of authority from the United States Secretary of the Treasury is based on information published in Federal Register covering the date on which Bond was executed.

11.6.5 Each Bond given or tendered to the City pursuant to the Contract must be on City forms with no changes made by Contractor or Surety, and must be dated, executed, and accompanied by power of attorney stating that the attorney in fact executing such the bond has requisite authority to execute such Bond. The Bonds must be dated and must be no more than 30 days old.

11.6.6 Surety shall designate in its Bond, power of attorney, or written notice to the City, an agent resident in Harris County to whom any requisite notices may be delivered and on whom service of process may be had in matters arising out of the suretyship.

11.6.7 Contractor shall furnish information to a payment bond beneficiary as required by TEX. GOV'T CODE ANN. CH. 2253.

11.7 *DELIVERY OF BONDS*

11.7.1 Contractor shall deliver required Bonds to the City within time limits stated in Notice of Intent to Award and prior to Date of Commencement of the Work.

ARTICLE 12 - UNCOVERING AND CORRECTION OF THE WORK

12.1 *UNCOVERING OF THE WORK*

12.1.1 If a portion of the Work has been covered which City Engineer has not specifically requested to observe prior to its being covered, City Engineer may request to see such work and it must be uncovered by Contractor. If such work is in accordance with the Contract, the costs of uncovering and covering such work are charged to the City by Change Order. If such work is not in accordance with the Contract, Contractor shall pay for uncovering and shall correct the nonconforming Work promptly after receipt of Notice of Noncompliance to do so.

12.2 *CORRECTION OF THE WORK*

12.2.1 Contractor shall promptly correct or remove work rejected by City Engineer or work failing to conform to requirements of the Contract, whether observed before or after Date of Substantial Completion and whether fabricated, Installed, or completed.

12.2.2 Contractor bears costs of correcting the rejected or nonconforming work including additional testing and inspections, and compensation for Design Consultant's services and expenses made necessary thereby.

12.2.3 If within one year after Date of Substantial Completion, or after date for commencement of warranties established under Paragraph 9.9.5 or by other applicable special warranty required by the Contract, whichever is later in time, any of the Work is found not to be in accordance with the requirements of the Contract, Contractor shall correct such work promptly after receipt of Notice of Noncompliance to do so.

12.2.4 One-year correction period for portions of the Work completed after Date of Substantial Completion will begin on the date of acceptance of that portion of the Work. This obligation under this Paragraph survives acceptance of the Work under the Contract and termination of the Contract.

12.2.5 The one-year correction period does not establish a duration for the Contractor's general warranty under Paragraph 3.12. The City retains the right to recover damages from the Contractor as long as may be permitted by the applicable statute of limitations.

12.2.6 If Contractor does not proceed with correction of the nonconforming work within time fixed by Notice of Noncompliance, the City may correct nonconforming work or remove nonconforming work and store salvageable Products at Contractor's expense. Contractor shall pay the costs of correction of nonconforming work and removal and storage of salvageable Products to the City. If Contractor does not pay costs of the correction or removal and storage within 10 days after written notice, the City may sell the Products at auction or at private sale. The City will account for proceeds thereof after deducting costs and damages that would have been borne by Contractor, including compensation for services of Design Consultant and necessary expenses. If the proceeds of sale do not cover costs which Contractor should have borne, Contractor shall pay the value of the deficiency to the City.

12.2.7 Contractor bears cost of correcting work originally installed by Contractor, the City, or by separate contractors and damaged by Contractor's correction or removal of Contractor's work.

12.3 *ACCEPTANCE OF NONCONFORMING WORK*

12.3.1 If City Engineer prefers to accept work which is not in accordance with requirements of the Contract, City Engineer may do so only by issuance of Change Order, instead of requiring its removal and correction. City Engineer will determine Contract Price reduction. The reduction will become effective even if final payment has been made.

ARTICLE 13 - MISCELLANEOUS PROVISIONS

13.1 *GOVERNING LAWS*

13.1.1 The Contract is subject to the laws of the State of Texas, the City Charter and Ordinances, the laws of the federal government of the United States, and all rules and regulations of any regulatory body or officer having jurisdiction.

13.1.2 Venue for any litigation relating to the Contract is Harris County, Texas.

13.2 *SUCCESSORS*

13.2.1 The Contract binds and benefits the Parties and their legal successors and permitted assigns; however, this Paragraph 13.2.1 does not alter the restrictions on assignment and disposal of assets set out in Paragraph 13.3.1. The Contract does not create any personal liability on the part of any officer or agent of the City.

13.3 *BUSINESS STRUCTURE AND ASSIGNMENTS*

13.3.1 Contractor may not assign the Contract at law or otherwise, or dispose of all or substantially all of its assets without City Engineer's prior written consent. Nothing in this Section, however, prevents the assignment of accounts receivable or the creation of a security interest as described in §9.406 of the Texas Business & Commerce Code. In the case of such an assignment, Contractor shall immediately furnish the City with proof of the assignment and the name, telephone number, and address of the assignee and a clear identification of the fees to be paid to the assignee.

13.3.2 Any series, as defined by the TEX. BUS. ORG. CODE ANN., affiliate, subsidiary, or successor to which Contractor assigns or transfers assets shall join in privity and be jointly and severally liable under this Contract.

13.4 *WRITTEN NOTICE*

13.4.1 All notices required or permitted by the Contract must be in writing and must be effected by hand delivery; registered or certified mail, return receipt requested; or facsimile with confirmation copy mailed to receiving Party. Notice is sufficient if made or addressed with proper postage to the address stated in the Agreement for each Party ("Notice Address") or faxed to the facsimile number stated in the Agreement for each Party. The notice is deemed delivered on the earlier of:

- 13.4.1.1 the date the Notice is actually received;
- 13.4.1.2 the third day following deposit in a United States Postal Service post office or receptacle; or
- 13.4.1.3 the date the facsimile is sent unless the facsimile is sent after 5:00 p.m. local time of the recipient and then it is deemed received on the following day.

Any Party may change its Notice Address or facsimile number at any time by giving written notice of the change to the other Party in the manner provided for in this Paragraph at least 15 days prior to the date the change is affected.

13.5 *RIGHTS AND REMEDIES*

13.5.1 Duties and obligations imposed by the Contract and rights and remedies available thereunder are in addition to and not a limitation of duties, obligations, rights, and remedies otherwise imposed or available by law.

13.5.2 No act or failure to act by the City or Contractor is a waiver of rights or duties afforded them under the Contract, nor is the act or failure to act constitute approval of or acquiescence in a breach of the Contract. No waiver, approval or acquiescence is binding unless in writing and, in the case of the City, signed by City Engineer.

13.6 *TESTS AND INSPECTIONS*

13.6.1 Contractor shall give City Engineer, Construction Manager, and Design Consultant timely notice of the time and place where tests and inspections are to be made. Contractor shall cooperate with inspection and testing personnel to facilitate required inspections or tests.

13.6.2 The City will employ and pay for services of an independent testing laboratory to perform inspections or acceptance tests required by the Contract except:

- 13.6.2.1 inspections or tests covered by Paragraph 13.6.3;
- 13.6.2.2 those otherwise specifically provided in the Contract; or
- 13.6.2.3 costs incurred in connection with tests or inspections conducted pursuant to Paragraph 12.2.2.

13.6.3 Contractor is responsible for and shall pay all costs in connection with inspection or testing required in connection with City Engineer's acceptance of a Product to be incorporated into the Work, or of materials, mix designs, or equipment submitted for approval prior to Contractor's purchase thereof for incorporation into the Work.

13.6.4 Neither observations by the City, Construction Manager, or Design Consultant, nor inspections, tests, or approvals by others, relieves Contractor from Contractor's obligations to perform the Work in accordance with the Contract.

13.7 *INTEREST*

13.7.1 No interest will accrue on late payments by the City except as provided under Chapter 2251 of the Government Code.

13.8 *PARTIES IN INTEREST*

13.8.1 The Contract does not bestow any rights upon any third party, but binds and benefits the Parties only.

13.9 *ENTIRE CONTRACT*

13.9.1 The Contract merges the prior negotiations and understandings of the Parties and embodies the entire agreement of the Parties. No other agreements, assurances, conditions, covenants, express or implied, or other terms of any kind, exist between the Parties regarding the Contract.

13.10 *WRITTEN AMENDMENT*

13.10.1 Changes to the Contract that cannot be effected by Modifications, must be made by written amendment, which will not be effective until approved by City Council.

13.11 *COMPLIANCE WITH LAWS*

13.11.1 Contractor shall comply with the Americans with Disabilities Act of 1990 as amended (ADA) and Texas Architectural Barriers Act and all regulations relating to either statute.

13.11.2 Contractor shall comply with all applicable federal, state, and city laws, rules and regulations.

13.12 *SEVERABILITY*

13.12.1 If any part of the Contract is for any reason found to be unenforceable, all other parts remain enforceable to the extent permitted by law.

ARTICLE 14 - TERMINATION OR SUSPENSION OF THE CONTRACT

14.1 *TERMINATION BY THE CITY FOR CAUSE*

14.1.1 Each of the following acts or omissions of Contractor or occurrences shall constitute an "Event of Default" under the Contract:

14.1.1.1 Contractor refuses or fails to supply enough properly skilled workers or proper Products;

14.1.1.2 Contractor disregards laws, ordinances, rules, regulations, or orders of a public authority having jurisdiction;

14.1.1.3 Contractor is guilty of material breach of any duty or obligation of Contractor under the Contract, including, but not limited to, failure to submit certified payrolls electronically;

14.1.1.4 Contractor has had any other contract with the City terminated for cause at any time subsequent to the effective date of the Contract as set out in the Agreement; or

14.1.1.5 Contractor fails to utilize Ultra Low Sulfur Diesel Fuel, as required in Paragraph 3.9.1.1.

14.1.2 If an Event of Default occurs, City Engineer may, at his option and without prejudice to any other rights or remedies which the City may have, deliver a written notice to Contractor and Surety describing the Event of Default and giving the Contractor 10 days to cure the Event of Default. If after the cure period, Contractor has failed or refused to cure the Event of Default, then City Engineer may deliver a second written notice to Contractor giving notice of the termination of the Contract or of the termination of Contractor's performance under the Contract ("Notice of Termination"). If City Engineer issues a Notice of Termination, then City Engineer may, subject to any prior rights of Surety and any other rights of the City under the Contract or at law:

14.1.2.1 request that Surety complete the Work; or

14.1.2.2 take possession of the site and all materials, equipment, tools, and construction equipment and machinery on the site owned by Contractor; and

14.1.2.3 finish the Work by whatever reasonable method City Engineer may deem expedient.

14.1.3 After Contractor's receipt of a Notice of Termination, and except as otherwise directed in writing by City Engineer, Contractor shall:

14.1.3.1 stop the Work on the date and to the extent specified in the Notice of Termination;

14.1.3.2 place no further orders or subcontracts for Products or services;

14.1.3.3 terminate all orders and subcontracts to the extent that they relate to performance of work terminated;

14.1.3.4 assign to the City, in the manner, at the times, and to the extent directed by City Engineer, all rights, title, and interest of Contractor, under the terminated supply orders and subcontracts. The City may settle or pay claims arising out of termination of the orders and subcontracts;

14.1.3.5 settle all outstanding liabilities and all claims arising out of the termination of

supply orders and subcontracts with approval of City Engineer;

14.1.3.6 take action as may be necessary, or as City Engineer may direct, for protection and preservation of property related to the Work that is in possession of Contractor, and in which the City has or may acquire an interest; and

14.1.3.7 secure the Work in a safe state before leaving the site, providing any necessary safety measures, shoring, or other devices.

14.1.4 If the City terminates the Contract or terminates Contractor's performance under the Contract for any one or more of the reasons stated in Paragraph 14.1.1, Contractor may not receive any further payment until the Work is complete, subject to Paragraph 14.1.5.

14.1.5 If the unpaid balance of Contract Price exceeds the costs of finishing the Work, including liquidated damages and other amounts due under the Contract, the balance will be paid to Contractor. If the costs of finishing the Work exceed the unpaid balance, Contractor shall, within 10 days of receipt of written notice setting out the amount of the excess costs, pay the difference to the City. The amount to be paid to Contractor or the City will be certified by City Engineer in writing, and this obligation for payment shall survive termination of the Contract or termination of Contractor's performance under the Contract. Termination of the Contractor for cause shall not relieve the Surety from its obligation to complete the project.

14.2 *TERMINATION BY THE CITY FOR CONVENIENCE*

14.2.1 City Engineer may, without cause and without prejudice to other rights or remedies of the City, give Contractor and Surety a Notice of Termination with a seven days written notice.

14.2.2 After receipt of the Notice of Termination, and except as otherwise approved by City Engineer, Contractor shall conform to requirements of Paragraph 14.1.3.

14.2.3 After receipt of the Notice of Termination, Contractor shall submit to the City its termination Claim, in forms required by City Engineer. The Claim will be submitted to the City promptly, but no later than six months from the effective date of termination, unless one or more extensions are granted by City Engineer in writing. If Contractor fails to submit its termination Claim within the time allowed, in accordance with Paragraph 14.2.4, City Engineer will determine, on the basis of available information, the amount, if any, due to Contractor because of termination, and City Engineer's determination is final and binding on the Parties. The City will then pay to Contractor the amount so determined.

14.2.4 City Engineer will determine, on the basis of information available to City Engineer, the amount due, if any, to Contractor for the termination as follows:

14.2.4.1 Contract Price for all work performed in accordance with the Contract up to the date of termination determined in the manner prescribed for monthly payments in Article 9, except no retainage is withheld by the City either for payment determined by percentage of completion or for materials and equipment delivered to the site, in storage or in transit.

14.2.4.2 Reasonable termination expenses, including costs for settling and paying Subcontractor and Supplier claims arising out of termination of the Work, reasonable cost of preservation and protection of the City's property after termination, if required, and the cost of Claim preparation. Termination expenses do not include field or central office overhead, salaries of employees of Contractor, or litigation costs, including attorneys' fees.

No amount is allowed for anticipated profit or central office overhead on uncompleted work, or any cost or lost profit for other business of Contractor alleged to be damaged by the termination.

14.2.5 Contractor shall promptly remove from the site any construction equipment, tools, and temporary facilities, except the temporary facilities which City Engineer may wish to purchase and retain.

14.2.6 Contractor shall cooperate with City Engineer during the transition period.

14.2.7 The City will take possession of the Work and materials delivered to the site, in storage, or in transit, as of date or dates specified in the Notice of Termination, and is responsible for maintenance, utilities, security, and insurance, as stated in Notice of Termination.

14.3 *SUSPENSION BY THE CITY FOR CONVENIENCE*

14.3.1 City Engineer may, without cause, after giving Contractor and Surety 24-hour prior written notice, order Contractor to suspend, delay, or interrupt the Work in whole or in part for a period of time as City Engineer may determine.

14.3.2 An adjustment will be made in Contract Time equivalent to the time of suspension.

14.3.3 Adjustment will be made to Contract Price for increases in the cost of performance of the Work, including profit on increased cost of performance caused by suspension, delay, or interruption of the Work in accordance with Paragraph 7.3. No adjustment will be made to the extent that:

14.3.3.1 performance was, or would have been, suspended, delayed, or interrupted by another cause for which Contractor is responsible; or

14.3.3.2 adjustment is made or denied under another provision of the Contract.

14.4 *TERMINATION BY CONTRACTOR*

14.4.1 Contractor may terminate the Contract if the Work is stopped for a period of 30 days through no act or fault of Contractor, directly related to one of these events:

14.4.1.1 issuance of an order of a court or other public authority having jurisdiction;

14.4.1.2 act of government, such as a declaration of national emergency which makes material unavailable; or

14.4.1.3 if repeated suspensions, delays, or interruptions by the City as described in Paragraph 14.3 constitute, in the aggregate, more than 100 percent of the total number of days scheduled for completion, or 120 days in any 365-day period, whichever is less;

No termination will be effective for the above reasons if Contractor delivers written notice to City Engineer describing the reason for termination, giving the proposed termination date, and granting the City a reasonable opportunity to respond and cure any City default before termination is effective.

14.4.2 If the Contract is terminated pursuant to this Paragraph 14.4, Contractor shall comply with the requirements of Paragraphs 14.2.2 through 14.2.7.

END OF DOCUMENT

Document 00800

SUPPLEMENTARY CONDITIONS

The following Paragraphs amend and supplement the August 15, 2015 edition of the General Conditions. Unaltered portions of General Conditions remain in effect.

ARTICLE 1 - GENERAL PROVISIONS:

1.1 *DEFINITIONS: Insert the following Paragraphs 1.1.9.1, 1.1.23, and 1.1.25 reorder the remaining definitions accordingly. Please insert the amended definition of "Specifications".*

1.1.9.1 The firm of CB&I Environmental & Infrastructure, Inc has been employed by the City as Construction Manager for the Work.

1.1.23 *Good Faith Efforts.* Steps taken to achieve an MBE, WBE, SBE, or PDBE goal or other requirements which, by their scope, intensity, and usefulness, demonstrate the bidder's responsiveness to fulfill the business opportunity objective, as well as the Contractor's responsibility to put forth measures to meet or exceed the MBE, WBE, SBE, or PDBE goal (Contract Goal). These steps apply from before a contract's award, through its duration, and after its conclusion, in the event the Contractor has been unsuccessful in meeting the Contract Goal. These efforts are required whether a Goal Oriented Contract or a Regulated Contract, as defined in the Office of Business Opportunity's Policy & Procedures Manual, available at http://www.houstontx.gov/obo.

1.1.25 *Incidental Work.* Work described as incidental shall be work defined in Document 01110 - Summary of Work, that do not have a direct pay item listed in the Document 00410B - Bid Form Part B, or less than 1% of the Contract Price and not capable of being measured. If Work is identified as Incidental Work and also covered by Bid Form Part B quantities, then the unit price item quantities in the Bid Form Part B shall govern.

1.1.45 *Specifications.* Divisions 01 through 16 of the documents that are incorporated into the Agreement, consisting of written General Requirements and requirements for Products, standards, and workmanship for the Work, and performance of related services. All specifications are amended to include, under the Measurement and Payment Section, the following sentence: "Work described as Incidental Work shall not be paid as a separate unit price item."

ARTICLE 3 - THE CONTRACTOR

3.5 *LABOR: Insert the following Paragraphs, 3.5.3.1.1, 3.5.3.1.2, and 3.5.3.1.3.*

3.5.3.1.1 If the Original Contract Price is greater than One Million Dollars, Contractor shall make Good Faith Efforts to comply with the City ordinances regarding Minority Business

Enterprises (MBE), Women Business Enterprises (WBE), Persons with Disabilities Business Enterprises (PDBE) and Small Business Enterprise (SBE) participation goals which are as follows:

.1 the MBE goal is 13% percent,

.2 the WBE goal is 7% percent, and

.3 the PDBE goal is 0% percent.

.4 The bidder may substitute SBE participation of no more than four percent of the MBE goal, the WBE goal, or portions of the MBE Goal and WBE Goal.

3.5.3.1.2 The MBE, WBE, PDBE, and SBE goals are specific to this Agreement. The Contractor shall make reasonable efforts to achieve these goals.

3.5.3.1.3 Failure by Contractor to comply with the goals for MBE, WBE, SBE, or PDBE is a material breach of the Agreement, which may result in termination of the Agreement, or such other remedy permitted as the City deems appropriate.

ARTICLE 8 - TIME

8.1 *PROGRESS AND COMPLETION: Add the following Paragraph 8.1.6.1.*

8.1.6.1 Contractor shall credit the City by Change Order for inspection services for overtime work or work performed on Sundays or Legal Holidays. The amount Contractor credits the City will be [$50.00 per hour] per inspector for inspection services.

ARTICLE 9 - PAYMENTS AND COMPLETION

9.1 *UNIT PRICE WORK: Delete Section 9.1 in its entirety and insert the following Section 9.1.*

9.1 References to Unit Prices in individual Specification sections are not applicable to the Contract. Include payment for portions of the Work required by these sections in the Stipulated Price for the Contract.

9.12 *LIQUIDATED DAMAGES: Insert the following Paragraph 9.12.1.1.*

9.12.1.1 The amount of liquidated damages payable by Contractor or Surety for each and every day of delay beyond Contract Time, are **$1,200.00** per day.

ARTICLE 11 - INSURANCE AND BONDS

11.2 *INSURANCE TO BE PROVIDED BY CONTRACTOR: Insert the following Paragraph 11.2.1.2., and Table 2, "Additional Required Coverage".*

11.2.1.2 Contractor shall purchase for the duration of the Contract the insurance set out in Table 2 in addition to the minimum insurance coverage set out in section 11.2.1.

TABLE 2
ADDITIONAL REQUIRED COVERAGE
DEFENSE COSTS EXCLUDED FROM FACE AMOUNT OF POLICY.

(Coverage)	(Limit of Liability)
Property and Casualty Coverage: "All Causes of Loss" Builder's Risk Form for directing physical change to building or plant construction on the Work site and/or all land improvements including all work. (Including but not limited to earthquake, flood, boiler, and machinery including testing, damage to existing or adjoining property, time element coverage, collapse, soft costs (management, architecture, financial costs, pre-opening costs, etc.), transit coverage, off-site storage).	100% of Contract Price, including change orders

END OF DOCUMENT

Document 00805

EQUAL EMPLOYMENT OPPORTUNITY REQUIREMENTS
(City of Houston Information Requirements
for the Successful Bidder on All Construction Contracts)

DOCUMENTS THAT MUST BE SIGNED AND RETURNED TO THE CITY OF HOUSTON PRIOR TO FINAL EXECUTION OF CONTRACT

Certification by Bidder Regarding Equal Employment Opportunity EEO-3

Total Work Force Composition of the Company..... EEO-6
or in lieu thereof, a copy of the latest Equal Employment Opportunity Commission's EEO-1 form (This information is required only if the Contractor has a work force of 50 or more people and the Contract is $50,000 or more.)

Company's Equal Employment Opportunity Compliance Program EEO-7

INFORMATION THAT MUST BE SUPPLIED DURING THE COURSE OF THE WORK

Certification By Proposed Subcontractor Regarding
Equal Employment Opportunity EEO-26

Subcontractor's Equal Employment Opportunity
Compliance Program EEO-29

Certification by Proposed Material Suppliers, Lessors, and Professional
Service Providers Regarding Equal Employment Opportunity EEO-30

PLEASE COMPLETE PAGES EEO-3 THROUGH EEO-7 AND MAIL TO:

City of Houston
Office of Business Opportunity
Contract Compliance Section
611 Walker, 7th Floor
Houston, Texas 77002
Attention: Director

The remainder of the reports can be mailed at the appropriate time.

EQUAL EMPLOYMENT OPPORTUNITY PROGRAM REQUIREMENTS

The following are Equal Employment Opportunity requirements to be met and documents to be submitted to:

Office of Business Opportunity
Contract Compliance Section
611 Walker, 7th Floor
Houston, Texas 77002

Under the conditions and terms of all City construction contract, the prime contractor is responsible for all Equal Employment Opportunity compliance, including subcontractor compliance.

EQUAL EMPLOYMENT OPPORTUNITY FORMS (EEO Forms)

These forms are submitted by the prime contractors at the beginning of the Project and as requested:

- EEO Forms 3, 6, and 7 by prime contractors.

These forms are submitted by all subcontractors before they begin work on the project.

- EEO Forms 26 - 29 by subcontractors.

This form is submitted by all suppliers, lessors, or professional services providers before they begin work on the project:

- EEO Form 30

POSTING

The following poster should be clearly displayed on each job site, or in case of annual service agreements, in the Contractor's office:

Equal Employment Opportunity is the Law Poster

JOB SITE VISITS

Site visits will be made by a Contract Compliance Officer who will make their presence known to the Project Manager, Supervisor, or Foreman, and will conduct interviews with employees on site.

PAYMENT AND EVALUATION

Upon completion of the Project, as part of the contract-awarding department's total clearance process, the Office of Business Opportunity's Contract Compliance Section must certify to the department that all EEO compliance requirements have been met.

CERTIFICATION BY BIDDER REGARDING
EQUAL EMPLOYMENT OPPORTUNITY

GENERAL

In accordance with Executive Order 11246 (30 F.R. 12319-25), the implementing rules and regulations thereof, and orders of the Secretary of Labor, a certification regarding Equal Opportunity is required of bidders or prospective contractors and their proposed subcontractors prior to the award of contracts or subcontracts.

CERTIFICATION OF BIDDER

Bidder's Name:_____

Address:_____

Telephone Number:_____Fax :_____

Name of the company's EEO Officer: _____

E-mail Address:_____

Web Page/URL Address:_____

IRS Employer Identification Number:_____

Work to be performed:_____

Project No: _____

1. Participation in a previous contract or subcontract.

   a. Bidder has participated in a previous contract or subcontract subject to the Equal Opportunity Clause. ☐ YES ☐NO

   b. Compliance reports were required to be filed in connection with such contract or subcontract. ☐YES ☐NO

   c. Bidder has filed all compliance reports required by Executive Orders 10925, 11114, 11246, or by regulations of the Equal Employment Opportunity Commission issued pursuant to Title VII of the Civil Rights Act of 1964. ☐ YES ☐NO

   d. If answer of Item c. is "No", please explain in detail on reverse side of this certification.

2. Dollar amount of bid:$ _____

3. Anticipated performance period in days: _____

4. Expected total number of employees to perform the proposed construction: _____

5. Nonsegregated facilities.

   a. Notice to prospective federally-assisted construction contractors

      (1) A Certification of Nonsegregated Facilities, as required by the May 9, 1967, Order (32 F.R. 7439, May 19, 1967) on Elimination of Segregated Facilities, by the Secretary of Labor, must be submitted to the recipient prior to the award of a federally-assisted construction contract exceeding $10,000 which is not exempt from the provisions of the Equal Opportunity Clause.

      (2) Contractors receiving federally-assisted construction contract awards exceeding $10,000 which are not exempt from the provisions of the Equal Opportunity Clause will be required to provide the forwarding of the following notice to prospective subcontractors for supplies and construction contracts where the subcontracts exceed $10,000 and are not exempt from the provisions of the Equal Opportunity Clause.

      The federally-assisted construction Contractor certifies that he/she does not maintain or provide any segregated facilities at any of his/her establishments, and does not permit employees to perform their services at any location, under his/her control, where segregated facilities are maintained. The federally-assisted construction Contractor certifies further that he/she will not maintain or provide segregated facilities at any of his/her establishments, and will not permit employees to perform their services at any location, under his/her control, where segregated facilities are maintained. The federally-assisted construction Contractor agrees that a breach of this certification is a violation of the Equal Opportunity Clause in this Contract. As used in this certification, the term "segregated facilities" means any waiting rooms, work areas, restrooms and washrooms, restaurants and other eating areas, time clocks, locker rooms and other storage or dressing areas, parking lots, drinking fountains, recreation or entertainment areas, transportation, and housing facilities provided for employees which are segregated by explicit directive or are in fact segregated on the basis of race, creed, color, or national origin because of habit, local custom, or otherwise. The federally-assisted construction Contractor agrees that (except where he/she has obtained identical certifications from proposed Subcontractors for specific time periods) he/she will obtain identical certifications in duplicate from proposed Subcontractors prior to the award of subcontracts exceeding $10,000 which are not exempt from the provisions of the Equal Opportunity Clause, and that he/she will retain the duplicate of such certifications in his/her files. The Subcontractor will include the original in his/her bid package.

6. Race or ethnic group designation of bidder. Enter race or ethnic group in appropriate box:

☐ White ☐ Black ☐ Hispanic

☐ Pacific Islander, Asian ☐ American Indian, Aleut.

7. Gender of Owner ☐ Male ☐ Female

REMARKS: _____

Certification - The information above is true and complete to the best of my knowledge and belief.

_____
Company Officer (Please Type)

_____ _____
Signature Date

NOTE: The penalty for making false statements in offers is prescribed in 18 U.S.C. 1001.

CITY OF HOUSTON

Company Wide EEO Report

OBO-01-13-001
Office of Business Opportunity
04/13

1. Check One	2. Name and Address	3. FEID No.
__Prime ___Subcontractor		
4. County		5. TX CSJ DOT Project No. (if Applicable)

6. Contractor's Beginning Work Date on Project	7.City Of Houston Contract No.	8. This Report is based on Pay Period ending MM/DD/YYYY

9. TEXAS CONSTRUCTION EMPLOYMENT

TABLE A

JOB CATEGORIES	TOTAL EMPLOYEES		TOTAL MINORITIES		WHITE (Not of Hispanic Origin)		BLACK (Not of Hispanic Origin)		HISPANIC		AMERICAN INDIAN or ALASKAN NATIVE		ASIAN		NATIVE HAWAIIAN OR OTHER PACIF ISL		TWO OR MORE RACES	
	M	F	M	F	M	F	M	F	M	F	M	F	M	F	M	F	M	F
OFFICIALS (MANAGERS)	0	0	0	0														
SUPERVISORS	0	0	0	0														
FOREMEN/WOMEN	0	0	0	0														
ADMIN SUPPORT	0	0	0	0														
EQUIPMENT OPERATORS	0	0	0	0														
MECHANICS	0	0	0	0														
TRUCK DRIVERS	0	0	0	0														
IRONWORKERS	0	0	0	0														
CARPENTERS	0	0	0	0														
CEMENT MASONS	0	0	0	0														
ELECTRICIANS	0	0	0	0														
PIPEFITTERS, PLUMBERS	0	0	0	0														
PAINTERS	0	0	0	0														
LABORERS, SEMI-SKILLED	0	0	0	0														
LABORERS, UNSKILLED	0	0	0	0														
TOTALS	0	0	0	0	0	0	0	0	0	0	0	0	0	0	0	0	0	0

TABLE B

On-The-Job Trainees (OJT)	
M	F

TABLE C

On-The-Job Trainee																

OJT TOTALS	
M	F
0	0

10.IF ANY EMPLOYEES REPORTED IN 'TABLE A' ARE APPRENTICES, NAME OF THE PROGRAM, JOB CATEGORY, COUNT, RACE & SEX.

11. SUMMARIZE ALL HIRES FOR THE ENTIRE ACTIVE MONTH BY JOB CATEGORY, RACE, SEX (USE ADDITIONAL SHEET IF NEEDED).

	PRINTED NAME-FIRST/LAST	EMAIL ADDRESS	PHONE	SIGNATURE	DATE
12. PREPARER					
13. REVIEWER					

EQUAL EMPLOYMENT OPPORTUNITY COMPLIANCE PROGRAM FOR

_____

Name of Company

The Company's Office of Business Opportunity Program shall consist of documented good faith efforts to comply with the goals, timetables, and objectives set forth in the following Affirmative Action steps:

A. City of Houston's Specific Equal Employment Opportunity Policy and Clause as contained in City Council Ordinance No. 78-1538, passed August 9, 1978.

B. Notice of Requirement for Office of Business Opportunity to ensure Equal Employment Opportunity (Executive Order 11246).

C. Standard Federal Equal Employment Opportunity Construction Contract Specifications (Executive Order 11246).

Project: _____

_____

Company Officer (Please Type)

_____ _____

Signature Date

NOTE: The penalty for making false statements in offers is prescribed in 18 U.S.C. 1001.

SPECIAL PROVISIONS
SPECIFIC EQUAL EMPLOYMENT OPPORTUNITY POLICY

1. GENERAL

a. Equal employment opportunity requirements not to discriminate and to take affirmative action to assure equal employment opportunity are required by Executive Order 11246, as amended. The requirements set forth in these Special Provisions shall constitute the specific affirmative action requirements for Project activities under this Contract and shall supplement the notice of requirement for affirmative action to ensure equal employment opportunity and standard federal equal employment opportunity construction contract specifications.

b. The Contractor shall work with the City and the Federal Government in carrying out equal employment opportunity obligations and in their review of his/her activities under the Contract.

c. The prime Contractor and all Subcontractors holding subcontracts of $10,000 or more shall comply with the following minimum specific requirement activities of equal employment opportunity. The Contractor shall include these requirements in every subcontract of $10,000 or more with such modification of language as is necessary to make them binding on the Subcontractor.

2. EQUAL EMPLOYMENT OPPORTUNITY POLICY

The Contractor shall accept as his/her operating policy the following statement which is designed to further the provision of equal employment opportunity to all persons without regard to their race, age, color, religion, sex, or national origin, and to promote the full realization of equal employment opportunity through a positive continuing program:

> It is the policy of this Company to assure that applicants are employed, and that employees are treated during employment, without regard to their race, religion, color, sex, or national origin. Such action shall include: employment, upgrading, demotion, or transfer; recruitment or recruitment advertising; layoff or termination; rates of pay or other forms of compensation; and selection for training, including apprenticeship.

3. EQUAL EMPLOYMENT OPPORTUNITY OFFICER

The Contractor shall designate and make known to the City contracting officers an equal employment opportunity officer (hereinafter referred to as the EEO Officer) who must be capable of effectively administering and promoting an active Contractor program of equal employment opportunity and who must be assigned adequate authority and responsibilities to do so.

4. DISSEMINATION OF POLICY

a. All members of the Contractor's staff who are authorized to hire, supervise, promote, and discharge employees, or who recommend such action, or who are substantially involved in such action, will be made fully cognizant of, and will implement the Contractor's equal employment opportunity policy and contractual responsibilities to provide equal employment opportunity in each grade and classification of employment. To ensure that the above agreement will be met, the following actions shall be taken as a minimum:

(1) Periodic meetings of supervisory and personnel office employees shall be conducted before the start of work and then not less often than once every six months, at which time the Contractor's equal employment opportunity policy and its implementation will be reviewed and explained. The meetings shall be conducted by the EEO Officer or other knowledgeable company official.

(2) All new supervisory or personnel office employees will be given a thorough indoctrination by the EEO Officer, or other knowledgeable company official, covering all major aspects of the Contractor's equal employment opportunity obligations, within 30 days following their reporting for duty with the Contractor.

(3) The EEO Officer or appropriate company official shall instruct all employees engaged in the direct recruitment of employees for the Project relative to the methods followed by the Contractor in locating and hiring minorities and females.

b. In order to make the Contractor's equal employment opportunity policy known to all employees, prospective employees, and potential sources of employees, i.e., schools, employment agencies, labor unions (where appropriate), college placement officers, etc., the Contractor shall take the following actions:

(1) Notices and posters setting forth the Contractor's equal employment opportunity policy shall be placed in areas readily accessible to employees, applicants for employment, and potential employees.

(2) The Contractor's equal employment opportunity policy and the procedures to implement such policy shall be brought to the attention of employees by means of meetings, employee handbooks, or other appropriate means.

5. RECRUITMENT

a. When advertising for employees, the Contractor shall include in all advertisements for employees the notation "An Equal Opportunity Employer". All such advertisements will be published in newspapers, or other publications, having a large circulation among minority groups in the area from which the Project work force would normally be derived.

b. The Contractor shall, unless precluded by a valid bargaining agreement, conduct systematic and direct recruitment through public and private employee-referral sources likely to yield qualified minority-group applicants, including, but not limited to, State employment agencies, schools, colleges, minority-group organizations, and female recruitment agencies. To meet this requirement, the Contractor shall, through his/her EEO Officer, identify sources of potential minority and female employees, and establish with such identified sources procedures whereby such group applicants may be referred to the Contractor for employment consideration.

In the event the Contractor has a valid bargaining agreement providing for exclusive hiring hall referrals, he/she is expected to observe the provisions of that agreement to the extent that the system permits the Contractor's compliance with equal employment opportunity Contract provisions. (The U. S. Department of Labor has held that where implementation of such agreements has the effect of discriminating against minorities or women, or obligates the Contractor to do the same, such implementation violates Executive Order 11246 as amended).

c. The Contractor shall encourage his/her present employees to refer female or minority-group applicants for employment by posting appropriate notices or bulletins in areas accessible to all such employees. In addition, information and procedures with regard to referring such applicants will be discussed with employees.

6. PERSONNEL ACTIONS

a. Wage, working conditions, and employee benefits shall be established and administered, and personnel actions of every type, including hiring, upgrading, promotion, transfer, demotion, layoff and termination, shall be taken without regard to race, color, religion, sex, national origin, or age. The following procedures shall be followed:

(1) The Contractor shall conduct periodic inspections of Project sites to ensure that working conditions and employee facilities do not indicate discriminatory treatment of Project-site personnel.

(2) The Contractor shall periodically evaluate the spread of wages paid within each classification to determine any evidence of discriminatory wage practices.

(3) The Contractor shall periodically review selected personnel actions in depth to determine whether there is evidence of discrimination.

Where evidence is found, the Contractor shall promptly take corrective action. If the review indicates that the discrimination may extend beyond the actions reviewed, such corrective action shall include all affected persons.

(4) The Contractor shall promptly investigate all complaints of alleged discrimination made in connection with his/her obligations under this Contract, shall attempt to resolve such complaints, and shall take appropriate corrective action. If the investigation indicates that the discrimination may affect persons other than the complainant, such corrective action shall include such other persons. Upon completion of each investigation, the Contractor shall inform every complainant of all avenues of appeal.

7. TRAINING AND PROMOTION

a. The Contractor shall assist in locating, qualifying, and increasing the skills of minority-group and women employees and applicants for employment.

b. Consistent with the Contractor's work force requirements and as permissible under Federal and State regulations, the Contractor shall make full use of training programs, i.e., apprenticeship and on-the-job training programs, for the geographical area of Contract performance.

c. The Contractor shall advise employees and applicants for employment of available training programs and entrance requirements for each.

d. The Contractor shall periodically review the training and promotion potential of minority-group and women employees and shall encourage eligible employees to apply for such training and promotion.

8. UNIONS

If the Contractor relies in whole or in part upon unions as a source of employees, he/she shall use his/her best efforts to obtain the cooperation of such unions to increase minority groups and women within the unions, and to effect referrals by such unions of minority and female employees. Actions by the Contractor, either directly or through a contractor's association acting as his/her agent, will include the procedures set forth below:

a. The Contractor shall use best efforts to develop, in cooperation with the unions, joint training programs aimed toward qualifying more minority-group members and women for membership in the unions and increasing the skills of minority-group employees and women so that they may qualify for higher-paying employment.

b. The Contractor shall use best efforts to incorporate an equal employment opportunity clause into all union agreements to the end that such unions will be contractually bound to refer applicants without regard to their race, color, religion, sex, national origin, or age.

c. The Contractor is to obtain information as to the referral practices and policies of the labor union, except that to the extent such information is within the exclusive possession of the labor union, and such labor union refuses to furnish such information to the Contractor, the Contractor shall

so certify to the City and shall set forth what efforts have been made to obtain such information.

d. In the event the union is unable to provide the Contractor with a reasonable flow of minority and women referrals within the time limit set forth in the collective bargaining agreement, the Contractor shall, through independent recruitment efforts, fill the employment vacancies without regard to race, color, religion, age, sex, or national origin, making full efforts to obtain qualified and/or qualifiable minority group persons and women. (The U. S. Department of Labor has held that it shall be no excuse that the union with which the Contractor has a collective bargaining agreement providing for exclusive referral failed to refer minority employees.) In the event the union referral practice prevents the Contractor from meeting the obligations pursuant to Executive Order 11246, as amended, and these special provisions, such Contractor shall immediately notify the City.

9. SUBCONTRACTING

a. The Contractor shall use his/her best efforts to solicit bids from and to utilize minority-group and female subcontractors or subcontractors with meaningful minority-group and/or female representation among their employees.

b. The Contractor shall use his/her best efforts to assure Subcontractors' compliance with their equal employment opportunity obligations.

10. RECORDS AND REPORTS

a. The Contractor shall keep such records as are necessary to determine compliance with the Contractor's equal employment opportunity obligations. The records kept by the Contractor will be designed to indicate:

(1) The number of minority and non-minority group members and women employed in each work classification on the Project.

(2) The progress and efforts being made in cooperation with unions to increase employment opportunities for minorities and women (applicable only to contractors who rely in whole or in part on unions as a source of their work force).

(3) The progress and efforts being made in locating, hiring, training, qualifying, and upgrading minority and female employees.

(4) The progress and efforts being made in securing the services of female and minority subcontractors.

b. All records, including payrolls, must be retained for a period of three years following completion of the Contract work and shall be available at

reasonable times and places for inspection by authorized representatives of the City and/or the appropriate federal agency.

CITY OF HOUSTON, TEXAS

EQUAL EMPLOYMENT OPPORTUNITY CLAUSE

Pursuant to City Council Ordinance No. 78-1538, passed August 9, 1978, all contracts entered into by the City of Houston involving the expenditure of $10,000 or more, shall incorporate the following Equal Employment Opportunity Clause:

1. The Contractor, Subcontractor, vendor, Supplier, or lessee shall not discriminate against any employee or applicant for employment because of race, religion, color, sex, national origin, or age. The Contractor, Subcontractor, vendor, Supplier, or lessee shall take affirmative action to ensure that applicants are employed and that employees are treated during employment without regard to their race, religion, color, sex, national origin, or age. Such action will include, but not be limited to, the following: employment; upgrading; demotion or transfer; recruitment advertising; layoff or termination; rates of pay or other forms of compensation; and selection for training, including apprenticeship. The Contractor, Subcontractor, vendor, Supplier, or lessee agrees to post in conspicuous places available to employees, and applicants for employment, notices to be provided by the City setting forth the provisions of this Equal Employment Opportunity Clause.

2. The Contractor, Subcontractor, vendor, Supplier, or lessee states that all qualified applicants will receive consideration for employment without regard to race, religion, color, sex, national origin, or age.

3. The Contractor, Subcontractor, vendor, Supplier, or lessee shall send to each labor union or representatives of workers with which it has a collective bargaining agreement or other contract or understanding, a notice to be provided by the agency contracting officer advising the said labor union or workers' representative of the Contractor's and Subcontractor's commitments under Section 202 of Executive Order No. 11246, and shall post copies of the notice in conspicuous places available to employees and applicants for employment.

4. The Contractor, Subcontractor, vendor, Supplier, or lessee will comply with all provisions of Executive Order No. 11246 and the rules, regulations, and relevant orders of the Secretary of Labor or other Federal Agency responsible for enforcement of the equal opportunity and affirmative action provisions applicable, and shall likewise furnish all information and reports required by the Mayor and/or Contractor Compliance Officers for purposes of investigation to ascertain and effect compliance with this program.

5. The Contractor, Subcontractor, vendor, Supplier, or lessee shall furnish all information and reports required by Executive Order No. 11246, and by the rules, regulations, and orders of the Secretary of Labor, or pursuant

thereto, and shall permit access to all books, records, and accounts by the appropriate City and Federal officials for purposes of investigation to ascertain compliance with such rules, regulations, and orders. Compliance reports filed at such times as directed shall contain information as to the employment practice policies, program, and work force statistics of the Contractor, Subcontractor, vendor, Supplier, or lessee.

6. In the event of a Contractor's, Subcontractor's, vendor's, Supplier's, or lessee's non-compliance with the non-discrimination clause of this Contract or with any of such rules, regulations, or orders, this Contract may be canceled, terminated, or suspended in whole or in part, and the Contractor, Subcontractor, vendor, Supplier, or lessee may be declared ineligible for further City contracts in accordance with procedures provided in Executive Order No. 11246, and such other sanctions may be imposed and remedies invoked as provided in said Executive Order, or by rule, regulation, or order of the Secretary of Labor, or as may otherwise be provided by law.

7. The Contractor shall include the provisions of paragraphs 1 through 8 of this Equal Employment Opportunity Clause in every subcontract or purchase order unless exempted by rules, regulations, or orders of the Secretary of Labor issued pursuant to Section 204 of Executive Order No. 11246 of September 24, 1965 so that such provisions will be binding upon each Subcontractor or vendor. The Contractor shall take such action with respect to any subcontractor or purchase order as the contracting agency may direct as a means of enforcing such provisions, including sanctions for noncompliance; provided, however, that in the event the Contractor becomes involved in, or is threatened with litigation with a Subcontractor or vendor as a result of such direction by the contracting agency, the Contractor may request the United States to enter into such litigation to protect the interests of the United States.

8. The Contractor shall file and shall cause each of his Subcontractors, if any, to file compliance reports with the City in the form and to the extent as may be prescribed by the Office of Business Opportunity. Compliance reports filed at such times as directed shall contain information as to the practices, policies, programs, employment policies, and employment statistics of the Contractor and each Subcontractor.

NOTICE OF REQUIREMENT FOR AFFIRMATIVE ACTION
TO ENSURE EQUAL EMPLOYMENT OPPORTUNITY
(EXECUTIVE ORDER 11246)

1. The Offeror's or Bidder's attention is called to the "Equal Opportunity Clause" and the "Standard Federal Equal Employment Opportunity Construction Contract Specifications" set forth herein.

2. The goals and timetables for minority and female participation, expressed in percentage terms for the Contractor's aggregate work force in each trade on all construction work in the covered area, are as follows:

Timetables	Goals for Minority Participation for Each Trade	Goals for Female Participation for Each Trade
	26.2% - 27.3%	6.9%

These goals are applicable to all the Contractor's construction work (whether or not it is Federal or Federally-assisted) performed in the covered area.

The Contractor's compliance with the Executive Order and the regulations in 41 CFR Part 60-4 shall be based on its implementation of the Equal Opportunity Clause, specific affirmative action obligations required by the specifications set forth in 41 CFR 60-4.3(a), and its efforts to meet the goals established for the geographical area where the Contract resulting from this solicitation is to be performed. The hours of minority and female employment and training must be substantially uniform throughout the length of the Contract, and in each trade, and the Contractor shall make a good faith effort to employ minorities and women evenly on each of its projects. The transfer of minority or female employees or trainees from Contractor to Contractor or from project to project for the sole purpose of meeting the Contractor's goals shall be a violation of the Contract, the Executive Order, and regulations in 41 CFR part 60-4. Compliance with the goals will be measured against the total work hours performed.

3. The Contractor shall provide written notification to the Director of the Office of Federal Contract Compliance Programs within 10 working days of award of any construction subcontract in excess of $10,000 at any tier for construction work under the Contract resulting from this solicitation. The notification shall list the name, address, and telephone number of the Subcontractor; employer identification number; estimated dollar amount of the subcontract; estimated starting and completion dates of the subcontract; and the geographical area in which the Contract is to be performed.

4. As used in this Notice, and in the Contract resulting from this solicitation, the "covered area" is The Houston, Texas Standard Metropolitan Statistical Area.

STANDARD FEDERAL EQUAL EMPLOYMENT OPPORTUNITY
CONSTRUCTION CONTRACT SPECIFICATIONS
(EXECUTIVE ORDER 11246)

1. As used in these specifications:

   a. "Covered area" means the geographical area described in the solicitation from which this Contract resulted;

   b. "Director" means Director, Office of Federal Contract Compliance Programs, United States Department of Labor, or any person to whom the Director delegates authority;

   c. "Employer identification number" means the Federal Social Security number used on the Employer's Quarterly Federal Tax Return, U. S. Treasury Department Form 941.

   d. "Minority" includes:

      (i) Black (all persons having origins in any of the Black African racial groups not of Hispanic origin);

      (ii) Hispanic (all persons of Mexican, Puerto Rican, Cuban, Central or South American, or other Spanish culture or origin regardless of race);

      (iii) Asian and Pacific Islander (all persons having origins in any of the original peoples of the Far East, Southeast Asia, the Indian Subcontinent, or the Pacific Islands); and

      (iv) American Indian or Alaskan Native (all persons having origins in any of the original peoples of North America and maintaining identifiable tribal affiliations through membership and participation or community identification).

2. Whenever the Contractor, or any Subcontractor at any tier, subcontracts a portion of the work involving any construction trade, it shall physically include in each subcontract in excess of $10,000 the provisions of these specifications and the Notice which contains the applicable goals for minority and female participation and which is set forth in the solicitations from which this Contract resulted.

3. If the Contractor is participating (pursuant to 41 CFR 60-4.5) in a Hometown Plan approved by the U. S. Department of Labor in the covered area either individually or through an association, its affirmative action obligations on all work in the Plan area (including goals and timetables) shall be in accordance with that Plan for those trades which have unions participating in the Plan. Contractors must be able to demonstrate their participation in and compliance with the provisions of

any such Hometown Plan. Each Contractor or Subcontractor participating in an approved Plan is individually required to comply with its obligations under the EEO clause, and to make a good faith effort to achieve each goal under the Plan in each trade in which it has employees. The overall good faith performance by other Contractors or Subcontractors toward a goal in an approved Plan does not excuse any covered Contractor's or Subcontractor's failure to take good efforts to achieve the Plan goals and timetables.

4. The Contractor shall implement the specific affirmative action standards provided in Paragraphs 7a through p of these specifications. The goals set forth in the solicitation from which this Contract resulted are expressed as percentages of the total hours of employment and training of minority and female utilization the Contractor should reasonably be able to achieve in each construction trade in which it has employees in the covered area. The Contractor is expected to make substantially uniform progress toward its goals in each craft during the period specified.

5. Neither the provisions of any collective bargaining agreement, nor the failure by a union with whom the Contractor has a collective bargaining agreement to refer either minorities or women, shall excuse the Contractor's obligations under these specifications, Executive Order 11246, or the regulations promulgated pursuant thereto.

6. In order for the non-working training hours of apprentices and trainees to be counted in meeting the goals, such apprentices and trainees must be employed by the Contractor during the training period, and the Contractor must have made a commitment to employ the apprentices and trainees at the completion of their training, subject to the availability of employment opportunities. Trainees must be trained pursuant to training programs approved by the U. S. Department of Labor.

7. The Contractor shall take specific affirmative actions to ensure equal employment opportunity. The evaluation of the Contractor's compliance with these specifications shall be based upon its effort to achieve maximum results from its actions. The Contractor shall document these efforts fully, and shall implement affirmative action steps at least as extensive as the following:

   a. Ensure and maintain a working environment free of harassment, intimidation, and coercion at all sites, and in all facilities at which Contractor's employees are assigned to work. The Contractor, where possible, shall assign two or more women to each construction project. The Contractor shall specifically ensure that all foremen, superintendents, and other on-site supervisory personnel are aware of and carry out the Contractor's obligation to maintain such a working environment, with specific attention to minority or female individuals working at such sites or in such facilities.

   b. Establish and maintain a current list of minority and female recruitment sources, provide written notification to minority and female recruitment sources and to community organizations when the Contractor or its unions

have employment opportunities available, and maintain a record of the organizations' responses.

c. Maintain a current file of the names, addresses, and telephone numbers of each minority and female off-the-street applicant and minority or female referral from a union, a recruitment source, or community organization and of what action was taken with respect to each such individual. If such individual was sent to the union hiring hall for referral and was not referred back to the Contractor by the union or, if referred, not employed by the Contractor, this shall be documented in the file with the reason therefor, along with whatever additional actions the Contractor may have taken.

d. Provide immediate written notification to the Director when the union or unions with which the Contractor has a collective bargaining agreement has not referred to the Contractor a minority person or woman sent by the Contractor, or when the Contractor has other information that the union referral process has impeded the Contractor's efforts to meet its obligations.

e. Develop on-the-job training opportunities and/or participate in training programs for the area which expressly include minorities and women, including upgrading programs and apprenticeship and trainee programs relevant to the Contractor's employment needs, especially those programs funded or approved by the Department of Labor. The Contractor shall provide notice of these programs to the sources compiled under 7b above.

f. Disseminate the Contractor's EEO policy: by providing notice of the policy to unions and training programs and requesting their cooperation in assisting the Contractor in meeting its EEO obligations; by including it in any policy manual and collective bargaining agreement; by publicizing it in the company newspaper, annual report, etc.; by specific review of the policy with all management personnel and with all minority and female employees at least once a year; and by posting the company EEO policy on bulletin boards accessible to all employees at each location where construction work is performed.

g. Review, at least annually, the company's EEO policy and affirmative action obligations under these specifications with all employees having any responsibility for hiring, assignment, layoff, termination, or other employment decisions, including specific review of these items with on-site supervisory personnel such as superintendents, general foremen, etc., prior to the initiation of construction work at any job site. A written record shall be made and maintained identifying the time and place of these meetings, persons attending, subject matter discussed, and disposition of the subject matter.

h. Disseminate the Contractor's EEO policy externally by including it in any advertising in the news media, specifically including minority and female news media, and providing written notification to and discussing the

Contractor's EEO policy with other contractors and subcontractors with whom the Contractor does or anticipates doing business.

i. Direct its recruitment efforts, both oral and written, to minority, female and community organizations, to schools with minority and female students, and to minority and female recruitment and training organizations serving the Contractor's recruitment area and employment needs. Not later than one month prior to the date for the acceptance of applications for apprenticeship or other training by any recruitment source, the Contractor shall send written notification to organizations such as the above, describing the openings, screening procedures, and tests to be used in the selection process.

j. Encourage present minority and female employees to recruit other minority persons and women and, where reasonable, provide after school, summer, and vacation employment to minority and female youth both on the site and in other areas of a Contractor's work force.

k. Validate all tests and other selection requirements where there is an obligation to do so under 41 CFR Part 60-3.

l. Conduct, at least annually, an inventory and evaluation at least of all minority and female personnel for promotional opportunities and encourage these employees to seek or to prepare, through appropriate training, etc., for such opportunities.

m. Ensure that seniority practices, job classifications, work assignments, and other personnel practices do not have a discriminatory effect by continually monitoring all personnel and employment-related activities to ensure that the EEO policy and the Contractor's obligations under these specifications are being carried out.

n. Ensure that all facilities and company activities are nonsegregated except that separate or single-user toilet and necessary changing facilities shall be provided to assure privacy between the sexes.

o. Document and maintain a record of all solicitations of offers for subcontracts from minority and female construction contractors and suppliers, including circulation of solicitations to minority and female contractor associations and other business associations.

p. Conduct a review, at least annually, of all supervisors' adherence to and performance under the Contractor's EEO policies and affirmative action obligations.

8. Contractors are encouraged to participate in voluntary associations which assist in fulfilling one or more of their affirmative action obligations (7a through p). The efforts of a contractor association, joint contractor union, contractor-community, or other similar group of which the Contractor is a member and participant, may be asserted as fulfilling any one or more of its obligations under 7a through p of

these Specifications provided that the Contractor actively participates in the group, makes every effort to assure that the group has a positive impact on the employment of minorities and women in the industry, ensures that the concrete benefits of the program are reflected in the Contractor's minority and female work force participation, makes a good faith effort to meet its individual goals and timetables, and can provide access to documentation which demonstrates the effectiveness of actions taken on behalf of the Contractor. The obligation to comply, however, is the Contractor's and failure of such a group to fulfill an obligation shall not be a defense for the Contractor's noncompliance.

9. A single goal for minorities and a separate single goal for women have been established. The Contractor, however, is required to provide equal employment opportunity and to take affirmative action for all minority groups, both male and female, and all women, both minority and non-minority. Consequently, the Contractor may be in violation of the Executive Order if a particular group is employed in a substantially disparate manner (for example, even though the Contractor has achieved its goals for women generally, the Contractor may be in violation of the Executive Order if a specific minority group of women is under-utilized).

10. The Contractor shall not use the goals and timetables or affirmative action standards to discriminate against any person because of race, color, religion, sex, or national origin.

11. The Contractor shall not enter into any subcontract with any person or firm debarred from Government contracts pursuant to Executive Order 11246.

12. The Contractor shall carry out such sanctions and penalties for violation of these specifications and of the Equal Opportunity Clause, including suspension, termination, and cancellation of existing subcontracts as may be imposed or ordered pursuant to Executive Order 11246, as amended, and its implementing regulations, by the Office of Federal Contract Compliance Programs. Any Contractor who fails to carry out such sanctions and penalties shall be in violation of these specifications and Executive Order 11246, as amended.

13. The Contractor, in fulfilling its obligations under these specifications, shall implement specific affirmative action steps, at least as extensive as those standards prescribed in Paragraph 7 of these Specifications, so as to achieve maximum results from its efforts to ensure equal employment opportunity. If the Contractor fails to comply with the requirements of the Executive Order, the implementing regulations, or these specifications, the Director shall proceed in accordance with 41 CFR 60-4.B.

14. The Contractor shall designate a responsible official to monitor all employment-related activity to ensure that the company EEO policy is being carried out, to submit reports relating to the provisions hereof as may be required by the Government, and to keep records. Records shall at least include for each employee the name, address, telephone number, construction trade, union affiliation, if any, employee identification number when assigned, social security number, race, sex, status (e.g., mechanic, apprentice, trainee, helper, or laborer),

dates of changes in status, hours worked per week in the indicated trade, rate of pay, and locations at which the work was performed. Records shall be maintained in an easily-understandable and retrievable form; however to the degree that existing records satisfy this requirement, contractors shall not be required to maintain separate records.

15. Nothing herein provided shall be construed as a limitation upon the application of other laws which establish different standards of compliance or upon the application of requirements for the hiring of local or other area residents (e.g., those under the Public Works Employment Act of 1977 and the Community Development Block Grant Program).

DESCRIPTION OF JOB CATEGORIES

Officials, Managers, and Administrators

Occupations requiring administrative personnel who set board policies, exercise overall responsibility for the execution of these policies, or provide specialized consultation on a regional, district, area basis, or direct individual departments or special phases of a firm's operations.

Includes: Officials, executives, middle management, plant managers, department managers, superintendents, salaried foremen who are members of management, purchasing agents, buyers, bureau chiefs, directors, deputy directors, wardens, examiners, sheriffs, police and fire chiefs, and kindred workers.

Professionals

Occupations which require specialized and theoretical knowledge which is usually acquired through college or experience of such kind and amount as to provide a comparable background.

Includes: Accountants, auditors, airplane pilots and navigators, architects, artists, chemists, designers, dieticians, editors, engineers, lawyers, librarians, mathematicians, natural scientists, registered professional nurses, personnel and labor relations workers, physical scientists, teachers, social workers, doctors, psychologists, economists, systems analysts, employment and vocational rehabilitation counselors, instructors, police and fire captains and lieutenants, and kindred workers.

Paraprofessionals

Occupations in which workers perform some of the duties of a professional or technician in a supportive role, which usually requires less formal training and/or experience normally required for professional or technical status. Such positions may fall within an identified pattern of a "New Careers" concept.

Includes: Library assistants, medical aides, child support workers, police auxiliary, welfare service aides, recreation assistants, homemakers aides, home health aides, and kindred workers.

Technicians

Occupations requiring a combination of basic scientific knowledge and manual skill which can be obtained through about two (2) years of post high school education, such as is offered in many technical institutes and junior colleges, or through equivalent on-the-job training.

Includes: Computer programmers and operators, draftsmen, engineering aides, junior engineers, mathematical aides, licensed practical or vocational nurses,

photographers, radio operators, scientific assistants, surveyors, technical illustrators, technicians (medical, dental, electronics, physical sciences), police and fire sergeants, and kindred workers.

Protective Service Workers

Occupations in which workers are entrusted with public safety, security, and protection from destructive forces.

Includes: Police patrol officers, fire fighters, guards, deputy sheriffs, bailiffs, correctional officers, detectives, marshals, harbor patrol officers, and kindred workers.

Sales Workers

Occupations engaging wholly or primarily in direct selling.

Includes: Advertising agents and salespersons, insurance agents and brokers, real estate agents and brokers, stock and bond salespersons, demonstrators, salespersons and sales clerks, grocery clerks, cashiers, and kindred workers.

Office and Clerical

Occupations in which workers are responsible for internal and external communications, recording and retrieval of data and/or information and other paper work required in an office predominantly non-manual, though some manual work not directly involved with altering or transporting the products is included.

Includes: Bookkeepers, cashiers, collectors (bills and accounts), messengers and office helpers, office machine operators, shipping and receiving clerks, stenographers, typists and secretaries, telegraph and telephone operators, court transcribers, hearing reporters, statistical clerks, dispatchers, license distributors, payroll clerks, and kindred workers.

Skilled Craft Workers

Occupations in which workers perform jobs which require special manual skill through on-the-job training and experience, or through apprenticeship or other formal training programs. These workers exercise considerable independent judgment and usually receive an extensive period of training.

Includes: The building trades, hourly paid foremen and leadmen who are not members of management, mechanics and repairmen, skilled machining occupations, compositors and typesetters, electricians, engravers, job setters (metal), motion picture projectionists, pattern and model makers, stationary engineers, tailors, heavy equipment operators, carpenters, and kindred workers.

Operatives (semi-skilled)

Workers who operate machine or processing equipment or perform other factory-type duties of intermediate skill level which can be mastered in a few weeks and require only limited training.

Includes: Apprentices (auto mechanics), plumbers, bricklayers, carpenters, electricians, mechanics, building trades, metal workers, machinists, printing trades, operatives, attendants (auto service and parking), blasters, chauffeurs, deliverymen, dressmakers and seamstresses (except factory), dryers, furnacemen, heaters (metal), laundry and dry cleaning operatives, milliners, miners, motormen, oilers, greasers, etc. (except auto), painters (except construction and maintenance), photographic process workers, stationary firemen, truck and tractor drivers, weavers (textile), welders and flame cutters, and kindred workers.

Laborers (unskilled)

Workers in manual occupations which generally require no special training. These workers perform elementary duties that may be learned in a few days and require the application of little or no independent judgment.

Includes: Garage workers, car washers and greasers, gardeners (except farm) and groundskeepers, longshoremen and stevedores, lumbermen, craftsmen, and wood choppers, laborers performing lifting, digging, mixing, loading, and pulling operations, and kindred workers.

Service/Maintenance Workers

Occupations in which workers perform duties which result in or contribute to the comfort, convenience, hygiene, or safety for the general public, or which contribute to the upkeep and care of buildings, facilities or grounds, or public property. Workers in this group may operate machinery.

Includes: Chauffeurs, laundry and dry cleaning operatives, truck drivers, trash collectors, custodial personnel, gardeners and groundskeepers, construction laborers, attendants (hospital and other institutions), professional and personal service, counter and fountain workers, elevator operators, firemen and fire protection, guards, watchmen and doorkeepers, stewards, porters, waiters, and kindred workers.

CERTIFICATION BY PROPOSED SUBCONTRACTOR REGARDING EQUAL EMPLOYMENT OPPORTUNITY

_____

Name of Prime Contractor | Project WBS & OA Number

_____

Address

GENERAL

In accordance with Executive Order 11246 (30 F.R. 12319-25), the implementing rules and regulations thereof, and orders of the Secretary of Labor, a certification regarding Equal Opportunity is required of bidders or prospective contractors and their proposed subcontractors prior to the award of contracts or subcontracts.

SUBCONTRACTOR'S CERTIFICATION

Subcontractor's Name: _____

Address: _____

E-Mail Address: _____

IRS Employer Identification Number: _____

Job Description: _____
(Work performed by your company for this project)

1. Participation in a previous contract or subcontract.

   a. Subcontractor has participated in a previous contract or subcontract subject to the Equal Opportunity Clause. ____YES_____NO

   b. Compliance reports were required to be filed in connection with such contract or subcontract. ____YES_____NO

   c. Subcontractor has filed all compliance reports required by Executive Orders 10925, 11114, 11246, or by regulations of the Equal Employment Opportunity Commission issued pursuant to Title VII of the Civil Rights Act of 1964. ____YES_____NO

   d. If answer of Item c. is "No", please explain in detail on reverse side of this certification.

2. Dollar amount of proposed subcontract: $ _____

3. Anticipated performance period in days: _____

4. Expected total number of employees to perform the proposed subcontract: _____

5. Nonsegregated facilities.

   a. Notice to prospective federally-assisted construction contractors
      (1) A Certification of Nonsegregated Facilities, as required by the May 9, 1967, order (32 F.R. 7439, May 19, 1967) on Elimination of Segregated Facilities, by the Secretary of Labor, must be submitted to the Contractor prior to the award of a subcontract exceeding $10,000 which is not exempt from the provisions of the Equal Opportunity Clause.
      (2) Contractors receiving subcontract awards exceeding $10,000 which are not exempt from the provisions of the Equal Opportunity Clause will be required to provide for the forwarding of this notice to prospective subcontractors for supplies and construction contracts where the subcontracts exceed $10,000 and are not exempt from the provisions of the Equal Opportunity clause.

   b. Certification of non-segregated facilities

      The federally-assisted construction contractor certified that he/she does not maintain or provide any segregated facilities at any of his/her establishments, and does not permit employees to perform their services at any location, under his/her control, where segregated facilities are maintained. The federally-assisted construction Contractor certifies further that he/she will not maintain or provide any segregated facilities at any of his/her establishments, and will not permit employees to perform their services at any location, under his/her control, where segregated facilities are maintained. The federally-assisted construction Contractor agrees that a breach of this certification is a violation of the Equal Opportunity Clause in this Contract. As used in this certification, the term "segregated facilities" means any waiting rooms, work areas, restrooms and washrooms, restaurants, and other eating areas, time clocks, locker rooms and other storage or dressing areas, parking lots, drinking fountains, recreation or entertainment areas, transportation, and housing facilities provided for employees which are segregated by explicit directive or are in fact segregated on the basis of race, creed, color, or national origin because of habit, local custom, or otherwise. The federally-assisted construction Contractor agrees that (except where he/she has obtained identical certifications from proposed Subcontractors for specific time periods) he/she will obtain identical certifications in duplicate from proposed Subcontractors prior to the award of subcontracts exceeding $10,000 which are not exempt from the provisions of the Equal Opportunity Clause, and that he/she will retain the duplicate of such certifications in his/her files. The Contractor will include the original in his/her Bid Package.

6. Race or ethnic group designation of bidder. Enter race or ethnic group in

appropriate box:

☐ White ☐ Black ☐ Hispanic

☐ Pacific Islander, Asian ☐ American Indian, Aleut.

7. Gender

☐ Male ☐ Female

REMARKS:

Certification - The information above is true and complete to the best of my knowledge and belief.

_____

Company Officer (Please Type)

_____ _____

Signature Date

NOTE: The penalty for making false statements in offers is prescribed in 18 U.S.C. 1001.

CITY OF HOUSTON
Company Wide EEO Report

OBO-01-13-001
Office of Business Opportunity
04/13

1. Check One	2. Name and Address	3. FEID No.
__Prime ___Subcontractor		
4. County		5. TX CSJ DOT Project No. (if Applicable)

6. Contractor's Beginning Work Date on Project	7.City Of Houston Contract No.	8. This Report is based on Pay Period ending MM/DD/YYYY

9. TEXAS CONSTRUCTION EMPLOYMENT

TABLE A

JOB CATEGORIES	TOTAL EMPLOYEES		TOTAL MINORITIES		WHITE (Not of Hispanic Origin)		BLACK (Not of Hispanic Origin)		HISPANIC		AMERICAN INDIAN or ALASKAN NATIVE		ASIAN		NATIVE HAWAIIAN OR OTHER PACIF ISL		TWO OR MORE RACES	
	M	F	M	F	M	F	M	F	M	F	M	F	M	F	M	F	M	F
OFFICIALS (MANAGERS)	0	0	0	0														
SUPERVISORS	0	0	0	0														
FOREMEN/WOMEN	0	0	0	0														
ADMIN SUPPORT	0	0	0	0														
EQUIPMENT OPERATORS	0	0	0	0														
MECHANICS	0	0	0	0														
TRUCK DRIVERS	0	0	0	0														
IRONWORKERS	0	0	0	0														
CARPENTERS	0	0	0	0														
CEMENT MASONS	0	0	0	0														
ELECTRICIANS	0	0	0	0														
PIPEFITTERS, PLUMBERS	0	0	0	0														
PAINTERS	0	0	0	0														
LABORERS, SEMI-SKILLED	0	0	0	0														
LABORERS, UNSKILLED	0	0	0	0														
TOTALS	0	0	0	0	0	0	0	0	0	0	0	0	0	0	0	0	0	0

TABLE B

On-The-Job Trainees (OJT)	
M	F

TABLE C

On-The-Job Trainee																						

OJT TOTALS	
M	*F*
0	*0*

10.IF ANY EMPLOYEES REPORTED IN 'TABLE A' ARE APPRENTICES, NAME OF THE PROGRAM, JOB CATEGORY, COUNT, RACE & SEX.

11. SUMMARIZE ALL HIRES FOR THE ENTIRE ACTIVE MONTH BY JOB CATEGORY, RACE, SEX (USE ADDITIONAL SHEET IF NEEDED).

	PRINTED NAME-FIRST/LAST	EMAIL ADDRESS	PHONE	SIGNATURE	DATE
12. PREPARER					
13. REVIEWER					

Certification by Proposed Material Suppliers, Lessors, and Professional Service Providers Regarding Equal reemployment Opportunity

Company Name:_____ $_____
(Supplier, Lessor, Professional Service Provider) (Amount of Contract)

Company Address:_____

Company Telephone Number:_____Fax:_____

Goods or Service to be provided:_____

Web Page/URL Address:_____

Company Tax Identification Number:_____

Project No: [*WBS/CIP/AIP/File No.*]_____

Project Name: [*Legal Project Name*]_____

In accordance with the City of Houston Ordinance 78-1538, Supplier/Lessor/Professional Service Provider represents to be an equal opportunity employer and agrees to abide by the terms of the Ordinance. This certification is required of all Suppliers/Lessors/Professional Service Providers (hereinafter " Supplier") with contracts in the amount of $10,000.00 or more.

[ ] YES [ ] NO — Supplier agrees not to discriminate against any employee or applicant for employment because of race, religion, color, sex, national origin, or age.

[ ] YES [ ] NO — Supplier agrees that all qualified applicants will receive consideration for employment without regard to race, religion, color, sex, national origin, or age.

[ ] YES [ ] NO — Supplier will comply with all provisions of Executive Order No. 11246 and rules, regulations and applicable orders of the Department of Labor or other Federal Agency responsible for enforcement of applicable equal opportunity and affirmative action provisions and will likewise furnish all information and reports required by the Mayor or Contract Compliance Officers for the purpose of investigation to ascertain and effect compliance with the City of Houston's Office of Affirmative Action and Contract Compliance.

[ ] YES [ ] NO — The Supplier shall file and cause their sub-tier contractors to file compliance reports with the City in the form and to the extent as may be prescribed by the Mayor or Contract Compliance Offices. Compliance reports filed at such times as directed shall contain information including, but not limited to, the practice, policies, program, and employment policies.

I hereby certify that the above information is true and correct.

_____ _____
COMPANY OFFICER (Signature) Date

_____
NAME AND TITLE (Print or type) E-Mail Address

END OF DOCUMENT

Document 00808

REQUIREMENTS FOR THE CITY OF HOUSTON PROGRAM FOR MINORITY, WOMEN, AND SMALL BUSINESS ENTERPRISES (MWSBE) AND PERSONS WITH DISABILITIES ENTERPRISES (PDBE)

CONSTRUCTION CONTRACTS

I. GENERAL

A. CITY AUTHORITIES

1. The "OBO Director" is the City of Houston's Office of Business Opportunity Director, or his or her designee.

City of Houston

611 Walker Street, 7th Floor

Houston, Texas 77002

2. The "Contracting Department" for this Project is the City of Houston Department specified in Document 00520 – Agreement.

3. The "Project Manager" for this Project is specified in Document 00550, Contract Approval Notification.

II. REOCCURRING REPORTS THAT MUST BE SUBMITTED DURING THE COURSE OF THE CONTRACT:

A. MWSBE MONTHLY REPORT PROCESS

The Contractor shall complete the MWSBE Monthly Utilization Report in the Contract Compliance and Monitoring System (available at https://houston.mwdbe.com/).

B. The Contractor shall comply with further, applicable instructions regarding reporting and compliance as provided in Sections III.E and III.I below.

III. BUSINESS ENTERPRISE PROGRAM REQUIREMENTS:

A. PURPOSE

This Document facilitates implementation of City of Houston, Tex. Code of Ordinances Chapter 15, Article V, § 15-81 *et seq.*, relating to

MWSBE contract participation, and Code of Ordinances Chapter 15, Article VI, § 15-90 *et seq.,* relating to PDBE contract participation (collectively, the "Business Enterprise Program or "MWSBE"). City of Houston, Tex. Ordinance 2013-0428, May 8, 2013.

B. POLICY

It is the policy of the City to encourage the full participation of Minority and Women-owned Business Enterprises, Small Business Enterprises, and Persons with Disabilities Business Enterprises in all phases of its procurement activities and to afford them a full and fair opportunity to compete for City contracts at all levels.

C. POLICY ELEMENTS

1. The Contractor agrees to ensure that MWSBE firms have a full and fair opportunity to participate in the performance of City contracts. In this regard the Contractor shall make all reasonable Good Faith Efforts to meet the Contract Goals for this Contract.

2. The Contractor and any Subcontractor shall not discriminate on the basis of race, color, religion, national origin, or sex in the performance of City contracts.

3. Contractor's performance in meeting the Participation Plan Percentage will be monitored during the construction phase of the Contract by the Office of Business Opportunity ("OBO") and the Contracting Department (the "Department").

D. PERCENTAGE GOALS

The MWSBE goals and PDBE goals, if any, for the Work are specified in Document 00800 – Supplementary Conditions Goals.

E. CONTRACTOR RESPONSIBILITIES

1. **Prior to Award:**
The Bidder shall submit MWSBE documents in accordance with the requirements of Document 00410 – Bid Form Part A.

a. In accordance with the Code of Ordinances and the

OBO Good Faith Efforts Policy (Attachment A), the Department shall approve an Apparent Low Bidder's MWSBE Participation Plan, Document 00470 (the "Bidder's Plan" or "Plan"), within three business days of the Bid Opening only if the Department representative determines that Bidder's Plan meets the advertised Contract Goal and is administratively complete.

b. If the Department cannot approve the Bidder's Plan, it shall forward the Plan to OBO, who shall review the Bidder's Plan, and if applicable, the Bidder's Document 00471 (Record of Good Faith Efforts) and Document 00472 (Pre-Award Deviation Request) and determine whether the Bidder has made Good Faith Efforts to meet the Contract Goals within 10 business days of the Bid Opening.

c. If OBO determines that the Bidder has failed to provide a valid participation plan or make Good Faith Efforts or if the Bidder fails to provide documents and associated information required by this Document 00808 or reasonably requested in writing by OBO, OBO may declare the Bidder to be non-responsible.

d. If OBO determines that the Bidder has made Good Faith Efforts, OBO may approve the Bidder's Contract Goal Deviation request. Thereafter, the Bidder/Contractor shall be bound by the Plan, as approved or modified by OBO.

e. The Contractor shall:

(1) ensure that all MWSBE firms listed in the Plan are certified by the Office of Business Opportunity prior to bid date. Qualified, non-certified firms may obtain priority consideration for certification if no more than two firms are certified with the same capability as the non-certified firm.

(2) execute written contracts with all certified Subcontractors and Suppliers. All such contracts must be executed and sent to OBO and Contracting Department within 30 days after the date of the Notice to Proceed and must include provisions set forth in Articles 3 and 5 of Document 00700, General Conditions; and

(3) designate an MWSBE liaison officer who will administer the Contractor's MWSBE program and who shall document and maintain records of Good Faith Efforts to subcontract with MWSBE Subcontractors and Suppliers.

2. After Award:

a. The Contractor shall submit MWSBE Monthly Utilization Reports, as requested in Article II above.

b. The Contractor shall complete and submit to OBO a deviation request if the Contractor reasonably believes that it will not achieve the Business Enterprise Program Participation Plan Percentage documented in the Plan. The Contractors shall also submit to OBO, with a copy to the Contracting Department, a Record of Post-Award Good Faith Efforts (Document 00571) for each Certified Firm that the Contractor does not use in accordance with the Approved Plan before the Contractor uses another firm to perform the work.

c. The Contractor shall conform to the Plan unless OBO approves a deviation request. OBO shall approve or reject a request for deviation within five business days of receipt of the request.

d. OBO shall approve a deviation request if:

(1) for a reason beyond the Contractor's control, the Contractor is unable to use the certified MWSBE firm in the Plan to perform the specified work. In such cases, the Contractor shall use and document Good Faith Efforts to find a similarly qualified, certified MWSBE firm to perform such specified work; or

(2) the Contractor reasonably believes that, due to a change of scope, execution of the work in accordance with the directions from the Contracting Department is unlikely to meet the terms of the Plan. In such cases, the Contractor shall use and document Good Faith efforts to achieve a reasonable amount of MWSBE participation on the remaining work on the Contract.

(3) OBO shall not unreasonably withhold approval of a deviation request.

e. After the Date of Substantial Completion, OBO shall evaluate the Contractor's Good Faith Efforts towards meeting the Plan, as it may be amended.

f. If the Contractor fails to conform to the Plan and fails to submit a Post-Award Deviation Request or provide documents and associated information required by the Good Faith Efforts Policy or reasonably requested in writing by OBO, OBO may impose sanctions in accordance with Article VI of this Document 00808.

F. ELIGIBILITY OF MWSBE FIRMS FOR SUBCONTRACTING

1. To ensure that the City's Business Enterprise Program benefits only those firms that are owned and controlled by a minority person(s), a woman (women), a person(s) with a disability, or a small business enterprise, the Office of Business Opportunity will certify the eligibility of MWSBE and PDBE Contractors, Subcontractors, and Suppliers. Contact the OBO Certification Division at 832-393-0600 for information regarding certification.

2. Firms must be certified by OBO at the time of bid in order to be counted towards meeting MWSBE goals. OBO maintains a Certified Minority, Women and Small Business Enterprises and Persons with Disabilities Business Enterprises Directory on the City's website. This Directory also lists federally-designated Disadvantaged Business Enterprises (DBEs).

G. DETERMINATION OF MWSBE PARTICIPATION

MWSBE participation shall be counted toward meeting the Contract Goals in response to the following:

1. Contractor may count toward its Contract Goals only those MWSBE Subcontractors/ Suppliers performing a Commercially Usefully Function.

a. **COMMERCIALLY USEFUL FUNCTION** means a discrete task or group of tasks, the responsibility for performance of which shall be discharged by the MWSBE firm by using its own forces or by actively supervising on-site the execution of the tasks by another entity for whose work the MWSBE firm is responsible. In determining whether a certified firm is performing a commercially useful function, factors including but not limited to the following shall be considered: (1) whether the firm has the skill and expertise to perform the work for which it is being utilized and possesses all necessary licenses; (2) whether the firm is in the business of performing, managing, or supervising the work for which it has been certified and is being utilized; and (3) whether it is performing a real and actual service that is a distinct and verifiable element of the work called for in a contract. Without limiting the generality of the foregoing, a MWSBE will not be considered to be performing a commercially useful function, if it subcontracts more than 50 percent of a

contract being counted toward the applicable Contract Goals, unless such subcontracting in excess of 50 percent has been expressly approved by OBO either pre-bid or post award.

b. OBO shall approve a Plan Deviation Request if the Contractor demonstrates that the industry standard for the type of work involved is to subcontract over 50 percent of the work.

2. Once a firm is certified as a MWSBE firm, the total dollar value of the subcontract awarded to the MWSBE firm is counted toward the Contract Goals, counting only the work in which the MWSBE has performed a Commercially Useful Function. The use of one MWSBE certified firm to meet multiple goals (e.g. MBE, WBE, SBE goals) on a contract is prohibited, unless expressly approved by OBO. Safety and Participation goals do not count as a single goal concerning MWSBE/DBE requirements.

3. The dollar value of the work performed by a certified Prime Contractor may not be counted toward the MWSBE goal unless the certified Prime Contractor is a part of a joint venture. When the Contractor or Subcontractor is in a joint venture with one or more MWSBE firms, OBO shall determine the percent of participation resulting from such joint venture to be counted toward the Contract Goals. The City may count towards the Contractor's MWSBE contract goal that portion of the total value of the contract amount paid to an MWSBE joint venturer equal to the distinct, clearly defined portion of the contract work performed by the MWSBE.

4. A MWSBE Supplier's participation will be counted towards the MWSBE goals if all of the following criteria are met. The MWSBE Supplier must:

(a) negotiate price;

(b) determine quality and quantity;

(c) order the materials;

(d) show that the invoice is in the certified firm's name;

(e) pay for the material itself;

(f) control delivery; <u>and</u>

(g) be certified to provide the supplies in the appropriate NAICS code.

If the listed criteria above are not met, only the entire amount of fees or commissions charged for assistance in the procurement of the supplies and materials, or fees or transportation charges for the delivery of supplies or materials required on a job site will be counted towards the MWSBE goal. To be counted, proof must be provided of the fees paid and the fees must be reasonable and not excessive as compared with fees customarily allowed for similar services. MWSBE Supplier participation may account for no more than 50% of the MWSBE participation plan.

5. The OBO Policy and Procedures Manual, as amended from time to time, shall apply to the Contract for other determinations regarding counting MWSBE participation not explicitly provided for in the Contract.

H. CONTRACTOR COMPLIANCE

To ensure compliance with MWSBE requirements, OBO and the Department will monitor Contractor's efforts regarding MWSBE Subcontractors/Suppliers during the performance of this Contract. This may be accomplished through the following: job site visits; reviewing of records and reports; and interviews of randomly selected personnel.

I. RECORDS AND REPORTS

1. In accordance with II.A of this Document, the Contractor shall submit an initial report outlining MWSBE participation 40 days after the Notice to Proceed date, and on or before the 15th day of each month thereafter until all MWSBE subcontracting or material supply activity is completed. Each report shall cover the preceding month's activity. The Contractor shall use the MWSBE Contract Compliance and Monitoring System (B2G Now) to meet this requirement.

2. Contractor shall maintain the following records for review upon request by OBO or the Department:

a. Copies of executed Subcontractor agreements and purchase orders;
b. Documentation of payments and other transactions with MWSBE Subcontractors/ Suppliers; and
c. Appropriate explanations of any changes or replacements

of MWSBE Subcontractors/Suppliers. All replacement MWSBE Subcontractors/Suppliers must be certified by OBO.

d. Any other records required by OBO or Contracting Department.

3. If a Participation Plan Percentage is not being met, the monthly report shall include a narrative description of the progress being made in MWSBE participation. If sufficient MWSBE Subcontractors or Suppliers to meet the Participation Plan Percentage are being utilized, they should be identified by name and the dollar amount paid to date for work performed or materials furnished by each MWSBE during the monthly period. Reports are required when no activity has occurred in a monthly period.

4. Contractor shall retain all such records for a period of four years following completion of the Work and shall be available at reasonable times and places for inspection by authorized representatives of the City including the City Controller.

IV. SANCTIONS:

A. SUSPENSION PERIOD AND WAIVER

Pursuant to Section 15-86 of the Code of Ordinances, OBO is authorized to suspend any Contractor who has failed to make Good Faith Efforts for a period of up to, but not to exceed, five years.

B. GUIDELINES FOR IMPOSITION OF SANCTIONS

1. General:

a. OBO shall not impose any sanction except upon evidence of specific conduct on the part of a MWSBE or Contractor that is inconsistent with, or in direct contravention of, specific applicable requirements for Good Faith Efforts.

b. Imposition and enforcement of suspensions shall be consistent with applicable state law.

2. Severity of Sanctions:

a. In determining the length of any suspension, OBO shall consider the following factors:

(1) Whether the failure to comply with applicable requirements involved intentional conduct or, alternatively, may be reasonably concluded to

have resulted from a misunderstanding on the part of the Contractor or MWSBE of the duties imposed on them by Article V of Chapter 15 of the Code of Ordinances and these procedures;

(2) The number of specific incidences of failure by Contractor or MWSBE to comply;

(3) Whether the Contractor or MWSBE has been previously suspended;

(4) Whether the Contractor or MWSBE has failed or refused to provide OBO with any information requested by OBO's Director or required to be submitted to OBO's Director pursuant to law or these procedures;

(5) Whether the Contractor or MWSBE has materially misrepresented any applicable facts in any filing or communication to OBO; and

(6) Whether any subsequent restructuring of the subject business or other action has been undertaken to cure the deficiencies in meeting applicable requirements.

b. Suspensions may be for any length of time not to exceed five years. Suspensions in excess of one year shall be reserved for cases involving intentional or fraudulent misrepresentation or concealment of material facts, multiple acts in contravention of applicable requirements, cases where the Contractor or MWSBE has been previously suspended, or other similarly egregious conduct.

C. APPEALS

A decision to implement a suspension may be taken after notice and an opportunity for an informal conciliation conference with OBO and a hearing by the Contract Compliance Commission. Commission members shall not have participated in the actions or investigations giving rise to the suspension hearing.

D. NOTICE

1. Prior to imposing any suspension, OBO shall deliver written notice to the Contractor or MWSBE setting forth the grounds for the proposed suspension and setting a date, time, and place to appear for an informal conciliation conference with OBO, in addition to information regarding the appearance before the Contract Compliance Commission for a hearing on the matter.

2. Any notice required or permitted to be given hereunder to any Contractor or MWSBE may be given either by personal delivery or by certified United States mail, postage prepaid, return receipt requested, addressed to their most recent address as specified in the records of the Office of Business Opportunity or in the Contract if no address is on file with the Office of Business Opportunity.

E. HEARING PROCEDURES

Proceedings before the Contract Compliance Commission shall be conducted in accordance with Section 15-23 of the Code of Ordinances. If the Commission, in a written decision, finds that a suspension is supported by the evidence presented, the Commission shall submit its recommendation to the Mayor and City Council.

ATTACHMENT A

City of Houston
Office of Business Opportunity
Good Faith Efforts Policy

General Policy.

Good Faith Efforts are steps taken to achieve an Contract Goal or other requirements which, by their scope, intensity and usefulness demonstrates the bidder's responsiveness to fulfill the business opportunity objective prior to the award of a contract, as well as the contractor's responsibility to put forth measures to meet or exceed the Contract Goal throughout the duration of the contract.

Good Faith Efforts are required to be made and demonstrated by an apparent successful bidder on goal oriented contracts or proposer on a regulated contract prior to award of a contract. Good Faith Efforts are required on professional services and construction contracts and on procurement of goods and non-professional service contracts with goals. If a bidder, when submitting a participation plan at the time of bid or proposal submission, anticipates it cannot or will not meet the Contract Goal prior to the award, the bidder must demonstrate to Office of Business Opportunity ("OBO") it has made Good Faith Efforts to meet the Contract Goal, to be eligible for the contract award.

Good Faith Efforts shall be evaluated on a case-by-case basis in making a determination whether a bidder or contractor is in compliance with this policy. The efforts employed by a bidder or contractor should be those that one could reasonably expect a bidder or contractor to take if the bidder were actively and aggressively attempting to obtain MWSBE participation sufficient to meet the Contract Goal. Efforts taken that are mere formalities or other perfunctory acts shall not be considered Good Faith Efforts to meet Contract Goals.

The factors provided herein are representative of the types of actions OBO will consider in determining whether the bidder or contractor made Good Faith Efforts to obtain MWSBE participation to meet the Contract Goal. The factors prescribed below are not intended to be a mandatory checklist, nor is it intended to be exhaustive or exclusive. OBO may consider other factors or types of efforts that may be relevant in appropriate cases.

If a contractor fails to submit Good Faith Efforts documentation as provided in this Policy, it waives the right to appeal OBO decisions related to this Policy. OBO will

review all the efforts made by the contractor, including the quality and quantity of those efforts.

Pre–Award.

A bidder must submit a participation plan (Document 00470) to OBO at the time the bidder submits the bid. If the participation by certified MWSBE subcontractors documented on the participation plan ("participation") is less than the Contract Goal, a bidder should submit a Record of Good Faith Efforts (Document 00471) with the bid. A bidder should also submit a request for a deviation (Document 00472) if the bidder, having used Good Faith Efforts, reasonably believes that it cannot meet the Contract Goal or a commercially useful deviation.

In making a determination that the bidder has made a good faith effort to meet the Contract Goals, OBO shall consider specific documentation1 concerning the steps taken to obtain MWSBE participation, with a consideration of, by way of illustration and not limitation, whether the bidder demonstrated a genuine effort to comply with the following factors.

1. Attended any pre-bid or pre-proposal meetings scheduled by the City Department;

2. Followed up with MWSBEs that attended the pre-bid or pre-proposal meetings to discuss subcontracting and supplier opportunities and contacted MWSBEs listed in the City's online directory;

3. Conducted outreach with minority and women focused organizations and associations far in advance of solicitation due date (no less than 10 business days);

4. Identified and designated portions of the work to be performed by MWSBEs to increase the likelihood of meeting the Contract Goals (including where appropriate breaking down the contract into reasonably sized subcontracts to ensure participation);

5. Advertised subcontracting opportunities in news media focused towards minority and women persons far in advance of solicitation due date;

6. Provided MWSBEs with a point of contact that was knowledgeable about the project and possessed decision-making authority to answer questions from interested MWSBEs;

---

1 A list of common supporting documentation that may allow Contractors to support their good faith efforts can be found on the Office of Business Opportunity website at www.houstontx.gov/obo.

7. Provided a reasonable number of MWSBEs certified with timely written notices via email, mail, and/or fax and/or with documented contact regarding the subcontracting/supplier opportunities. A "reasonable number of MWSBEs" shall be based on the number of MWSBEs available in the directory;

8. Solicited the MWSBEs within a reasonable amount of time (no less than seven business days) before bid submission, as well as followed up with the MWSBEs solicited to determine if they were interested in submitting a bid or proposal or participating on a team.

9. Provided interested MWSBEs certified to perform the solicited work with prompt access to the plans, specifications, scope of work and requirements of the contract;

10. Negotiated in good faith with interested MWSBEs, and not rejecting MWSBEs as unqualified without sound reasons based on a thorough investigation of their capabilities;

11. Entered into a formal contract, or signing enforceable letters of intent with MWSBEs;

12. Provided an explanation to any MWSBE whose bid or price quotation is rejected, unless another MWSBE is accepted for the same work, as follows:

a. Where price competitiveness is not the reason for rejection, a written rejection notice including the reason for rejection will be sent to the rejected MWSBE firm;

b. Where price competitiveness is the reason for rejection, a – meeting must be held with the price-rejected MWSBE, if requested, to discuss the rejection;

13. Made efforts to assist interested MWSBEs in obtaining bonding, lines of credit, insurance required for the contract, and documenting MWSBE denied by bona fide surety agents;

14. Ensured that the conditions and requirements for subcontracts are commensurate with industry standards and would not cause an economic hardship on MWSBEs, such as unnecessary insurance or coupling bid bonds with retainage;

15. Incorporated efforts not attempted earlier or on previous bids that appear more likely to lead to attaining the Contract Goal. Past performance on similar contracts with similar scopes will also be

taken in consideration when determining Good Faith Efforts. A bidder that continues to make same efforts without any significant change in the level of participation may not be making Good Faith Efforts.

Post–Award.

The contractor must sign the approved participation plan (Document 00470 or Document 00570) prior to starting work on the Project. A contractor should submit a request for deviation (Document 00572) from OBO if the contractor, having made Good Faith Efforts, reasonably believes that it will not achieve the Participation Plan Percentage documented in the approved participation plan. Unless OBO approves a deviation, a contractor must submit to OBO a Participation Summary (Document 00660) prior to City Council's consideration of any close-out, term extension, or change order. If participation is less than anticipated in the approved participation plan, the contractor must submit a Record of Good Faith Efforts (Document 00571) along with the Participation Summary. A contractor that fails to submit a deviation request and Good Faith Efforts documentation waives the right to appeal OBO decisions related to this Policy.

If the contractor is awarded the contract and fails to achieve the established Participation Plan Percentage, the contractor must demonstrate to OBO its efforts to meet the Participation Plan Percentage and failure to do so based on circumstances that the contractor could not reasonably control. In determining whether the contractor made Good Faith Efforts to ensure full participation and achievement of the Participation Plan Percentage, OBO shall consider the following factors:

1. Whether the contractor designated an MWSBE liaison officer to administer the Contractor's MWSBE programs and to be responsible for maintenance of records of Good Faith Efforts.

2. Whether the contractor furnished prompt MWSBE Utilization Reports in a timely and accurate manner through the online Contract Monitoring System or via hard copy.

3. Whether the contractor responded to efforts to resolve disputes with MWSBEs, and genuinely attempted to resolve these issues.

4. Whether the contractor disclosed payment discrepancies timely and within the monthly reporting period;

5. Whether the contractor complied with the participation plan, unless the contractor received a deviation from the OBO Director and whether upon approval, the contractor made Good Faith Efforts to replace a removed MWSBE with another certified firm;

6. Whether the contractor furnished prompt written responses to written inquiries from the Director or any employee of OBO regarding the MWSBE's performance or information germane to the MWSBE's certification;

7. Whether the contractor ensured that at all times during the performance of any contract or subcontract the MWSBE firm is engaging in a commercially useful function as that term is defined in Chapter 15 of the City of Houston Code of Ordinances;

8. Whether the contractor provided the OBO information, or other material, that was factually accurate and free of material misrepresentation; and

9. Whether the contractor furnished prompt responses to requests for information, books and records needed to verify compliance from the department administering the Contract, the City Attorney and the City Controller;

10. Whether the contractor attended all meetings and mediation hearings as requested by the Director or his/her designee; and

11. How the contractor may be affected by change orders, with consideration given to the size of the change orders.

Change Orders.

The requirement to make Good Faith Efforts to achieve the approved Participation Plan Percentage is applicable to change orders. Contractors should make Good Faith Efforts to ensure that the Participation Plan Percentage remains substantially the same after the issuance of change orders. If a contractor cannot maintain substantially the same level of participation provided in the latest approved Participation Plan (Document 00470 or Document 00570) due to a change order, the contractor shall submit to the OBO Director and Contracting Department a Document 00571 (Post-Award Record of Good Faith Efforts) and Document 00572 (Post-Award Plan Deviation Request) in a timely manner that does not cause disruption to the project. In addition to other relevant factors, in evaluating whether Good Faith Efforts were made by the contractor to meet the Participation Plan Percentage despite change orders, the OBO Director shall consider the contractor's efforts to timely and efficiently deliver the project.

END OF DOCUMENT

Document 00820

WAGE SCALE AND PAYROLL REQUIREMENTS FOR ENGINEERING CONSTRUCTION

Wage Scale Requirements

1.1 Contractor and its Subcontractors must pay the general prevailing wage rates for building construction for each craft or type of worker or mechanic employed in the execution of any building construction or repair under the Contract in accordance with Chapter 2258 of the Texas Government Code and City of Houston, Texas Ordinance Nos. 85-2070, 2000-1114, 2001-152, 2006-91 and 2006-168, and 2009- 247 all as amended from time to time. City Council has determined the prevailing wage rate in the locality in which the work is being performed, which is set forth in Exhibit "A".

1.2 This prevailing wage rate does not prohibit the payment of more than the rates stated.

1.3 In bidding, Contractor warrants and represents that it has carefully examined the classifications for each craft or type of worker needed to execute the Contract and determined that such classifications in Exhibit "A" include all necessary categories to perform the work under the Contract.

1.4 The wage scale for engineering construction is to be applied to all site work greater than five feet from an exterior wall of new building under construction or from an exterior wall of an existing building.

1.5 If Contractor believes that an additional classification for a particular craft or type of worker is necessary to perform work under the Contract, it must submit with its bid a request to the Contract Compliance Division of the Office Of Business Opportunity ("OBO") to use an additional labor classification not listed in Exhibit "A" and specify the proposed new classification. OBO shall determine whether a proposed classification is already covered in Exhibit "A", and, if it is, specify which classification is appropriate. OBO's decision is conclusive. If OBO decides that a new classification is necessary, it will determine the appropriate prevailing wage rate for any resurveyed, amended, new, or additional craft or type of worker not covered by Exhibit "A". Such determination must be decided in accordance with procedures established by OBO, and in compliance with Chapter 2258 of the Texas Government Code and City of Houston, Texas Ordinance Nos. 85-2070, 2000-1114, 2001-152, 2006-91, 2006-168 and 2009-247 subject to City Council approval.

1.6 Contractor must not use any labor classification not covered by Exhibit "A" until such classification is established and approved for use by OBO.

1.7 A Contractor or Subcontractor who violates Chapter 2258 of the Texas Government Code must pay to the City, $60 per each worker employed for each calendar day or part of the day that the worker is paid less than the wage rates set forth in Exhibit "A".

1.8 The City may withhold money required to be withheld under Chapter 2258 of the Texas Government Code from the final payment to Contractor or earlier payments if City Council makes a determination that there is good cause to believe that Contractor has not complied with these provisions and Chapter 2258 of the Government Code, in which case the City may withhold the money at any time subsequent to the finding by City Council.

1.9 Contractor and Subcontractors must keep records specifying:

(1) the name and classification of each worker employed under the Contract; and

(2) the actual per diem wages paid to each worker, and the applicable hourly rate.

The records must be open at all reasonable hours for inspection by the officers and agents of the City.

1.10 The hourly cost of salary for non-exempt workers for labor in excess of 40 hours per worker per week, shall be calculated at 1.5 times the worker's base pay for the applicable craft and level.

Certified Payroll Requirements

2.1 Employees are paid weekly and payrolls are submitted weekly using the City of Houston's electronic payroll submission module, unless the prime Contractor has been instructed to do otherwise by the Office of Business Opportunity. When no work is done after a Contractor has started work, the Contractor is required to submit a weekly compliance statement indicating no work was performed. The payrolls must reflect the exact work and classification of the workers, the exact amount that they were paid. Workers must be paid the contracted amount (prevailing wage rates). The Contractor will be penalized $60.00 a day for each employee who is underpaid per Texas Government Code §2258.023 for all contracts.

2.2 Payrolls must be submitted electronically & indicate whether the worker worked inside or outside the building area when both wage rates are applicable to the contract.

2.3 Payrolls must be submitted each week until all work by the contractor is complete and the electronic payroll submission is marked as final in the system.

2.4 Payrolls must cover a seven day period from the start of the work week and must be consecutive seven day periods until all work is complete.

2.5 Payrolls must have employees' names, addresses, last four digits of the social security numbers, and job classifications. The job classifications must be the same as the classifications on the prevailing wage rate schedule.

2.6 A payroll deduction authorization form must be submitted for each employee for any deductions other than Federal and FICA taxes.

2.7 Employees must be paid overtime (time and a half) for all hours worked over 40 hours a week on both federally and City-funded contracts.

2.8 The Contractor has the responsibility to comply with all Internal Revenue Service rules and regulations. Contractors who submit certified payrolls with **Owner Operators (truckers)** must submit a signed tax liability statement from Owner Operator acknowledging their responsibility for Federal Income Tax and FICA reporting obligations.

2.9 If the Contractor wants to use the apprentice wage rates for an employee, the apprenticeship certificates must be submitted to the Office of Business Opportunity in advance of the employee working on the project and appearing on the payroll. You must comply with the listed number of journeymen to apprentices as listed.

2.10 A poster of the Prevailing Wage Rate Schedule should be clearly displayed on each job site from the time the project starts until the work is completed, or in case of annual service agreements, in the Contractor's office.

2.11 The Contractor shall submit the "Certificate from Contractor Appointing Officer or Employee to Supervise Payment of Employees" (Exhibit "**B**") to the Monitoring Authority listed in Document 00495 prior to final execution of the contract.

2.12 During the course of the work, ALL Subcontractors shall submit the "Certificate from Subcontractor Appointing Officer or Employee to Supervise Payment of Employees" (Exhibit "**C**") to the Monitoring Authority listed in Document 00495.

2.13 Upon completion of the Project, as part of the contract-awarding department's total clearance process, the Office of Business Opportunity's Contract Compliance Section must review whether the Wage Rate and Payroll Requirements were met and report the results to the department.

REST OF PAGE INTENTIONALLY LEFT BLANK

EXHIBIT "A"

LABOR CLASSIFICATIONS AND PREVAILING WAGE RATES FOR ENGINEERING CONSTRUCTION **2016**

CLASSIFICATION	RATE	CLASSIFICATION	RATE
Asphalt Distributor Operator	$14.06	Milling Machine Operator - Fine Grade	$13.53
Asphalt Paving Machine Operator	$14.32	Mixer Operator	$10.33
Asphalt Raker	$12.36	Motor Grader Operator- Rough	$14.23
Asphalt. Shoveler	$11.68	Motor Grader Operator	$15.69
Broom or Sweeper Operator	$12.68	Oiler	$12.12
Bulldozer Operator	$11.81	Painter-Structures	$18.62
Carpenter- Rough	$12.49	Pavement Marking Machine Operator	$11.18
Concrete Finisher- Paving	$13.07	Pile Driverman	$14.95
Concrete Finisher- Structures	$12.98	Pipe Layer	$12.12
Concrete Paving Curbing Machine Operator	$11.71	Reinforcing Steel Setter – Paving	$15.15
Concrete Paving Finishing Machine Operator	$13.07	Reinforcing Steel Setter – Structure	$14.39
Concrete Paving Joint Sealer Operator	$11.00	Roller Operator, Pneumatic - Self-propelled	$11.57
Concrete Paving. Saw Operator	$13.99	Roller Operator, Steel Wheel, Flat Wheel/Tamping	$11.57
Concrete Paving Spreader Operator	$10.44	Roller Operator, Steel Wheel, Plant Mix Pavement	$11.92
Concrete Rubber . . .	$9.00	Scraper Operator	$13.47
Crane Clamshell Backhoe Derrick, Dragline, Shovel Operator	$12.71	Servicer	$13.97
Crusher and Screening Plant Operator	$11.29	Sign Installer - PGM	$8.54
Electrician * 3 Journeyman 2 Apprentice Allowed	$27.11	Slip Form Machine Operator	$11.07
Flagger	$10.33	Spreader Box Operator	$13.58
Form Builder/Setter- Structures	$12.23	Structural Steel Worker	$14.39
Form Liner- Paving and Curb	$12.34	Tractor Operator - Crawler Type	$13.68
Form Setter- Paving and Curb	$12.34	Tractor Operator- Pneumatic	$10.07
Foundation Drill Operator - Crawler Mounted	$17.43	Transit Mixer Truck Driver	$11.00
Foundation Drill Operator - Truck Mounted	$15.89	Truck Driver, Lowboy-float	$16.03
Front End Loader Operator	$13.17	Truck Driver, Single-Axle - Heavy	$11.46
Laborer Common	$11.02	Truck Driver, Single-Axle - Light	$11.48
Laborer- Utility	$11.73	Truck Driver, Tandem Axle Semi-Trailer	$12.27
Manhole Builder	$9.00	Work Zone Barricade Servicer	$11.67
Mechanic	$16.96	Welders - Receive rate prescribed for craft performing operation to which welding is incidental	

* Apprentices- must be in an approved USDOL Program and cannot exceed ratios

Engineering Prevailing Wages Classification Definitions

Asphalt Distributor Operator
Drives distributor truck, sets spray bars and operates valves and levers to control distribution of bituminous material for highway surfacing. May oil, grease or otherwise service and make adjustments to equipment as needed. Performs other related duties.

Asphalt Paving Machine Operator
Operates paving machine that spreads and levels asphaltic concrete on highway subgrade. Controls movement of machine, raises and lowers screed, regulates width of screed. May, oil, grease, service and make adjustments to equipment as needed. Performs other related duties.

Asphalt Raker
Distributes asphaltic materials evenly over road surface by raking and brushing material to correct thickness; directs Laborers when to add or take away material to fill low spots or to reduce high spots. Performs other related duties.

Asphalt Shoveler
A general term used on construction work covering many unskilled classifications requiring work of a physical nature. A laborer works with all crews doing everything from pick and shovel work to cleaning up lumber with hammer, shoveling and placing concrete, uses air tools, cleans concrete joints and fills joints with sealing compound from bucket or with hose and nozzle from a central source, applies coating of oil to inside face of forms, may help set and strip forms, unloads and transports reinforcing steel, cures newly poured concrete, helps lower pipe into ditch for pipelayers, builds fences, works with dirt crew keeping construction layout stakes out of the way of dirt moving equipment.

Broom or Sweeper Operator
Operates a self-propelled machine to sweep and clean roadway surfaces. May oil grease, service and make adjustments to equipment as needed. Performs other related duties.

Bulldozer Operator
Operates a crawler tractor with a bulldozer mounted in front of chassis to level, distribute and push earth or other material. May operate a ripper attachment to break up rock or other hard material. May use a push block on front of tractor to push load scrapers. May oil, grease, or otherwise service and make minor repairs to equipment as needed. Performs other related duties.

Carpenter, Rough
Works from plans to build, assemble, fit together, align, plum, and set in place forms for molding concrete structures. Forms may be wood, steel, aluminum, fiberglass or any other type of material. Checks form while concrete is placed. May install miscellaneous materials integral to concrete structures. May set precast concrete elements. Prepares for slipforming traffic rail and median barrier. May install permanent metal deck forms. May work with power tools Performs other related duties.

Concrete Finisher, Paving
Finishes the exposed surfaces of fresh concrete paving, median barrier and every element of concrete structures to the final grade and contour structures to the final grade and contour with the use of straight edges and steel trowels. Operates bridge deck finishing machine. Finishes concrete curbs and gutters. Finishes exposed surface of concrete after forms have been removed by patching imperfections with fresh concrete, rubbing surface with abrasive stone, and directing others in removing excess or defective concrete with power tools. Performs other related duties.

Concrete Finisher, Structures
A worker semi-skilled in concrete finishing who assists Concrete finisher by performing specific or general duties of lesser skill and keeping Concrete Finisher supplied with materials, tools, and supplies; cleaning working area an equipment; and holding materials and tools. Performs other related duties.

Concrete Paving Curbing Machine Operator
Operates self - propelled machine(s) which may or may not travel on concrete paving forms, spreading and leveling fresh concrete to grade by use of augers and screeds. May oil, grease or otherwise service and make adjustments to equipment as necessary. Performs other related duties.

Concrete Paving Finishing Machine Operator
Operates self - propelled machine(s) which may or may not travel on concrete paving forms, spreading and leveling fresh

concrete to grade by use of augers and screeds. May oil, grease or otherwise service and make adjustments to equipment as necessary. Performs other related duties.

Concrete Paving Joint Sealer Operator
Cleans and seals joints requiring a hot or cold sealing compound in concrete paving, sidewalks, driveway and approach slabs. May oil, grease or make necessary repairs adjustments to equipment as needed. Performs other related duties.

Concrete Paving Saw Operator
Operates a water-cooled power saw with either or an abrasive blade to saw expansion and contraction joints in concrete paving. May also be used to saw asphaltic pavements. May oil grease or otherwise service and make necessary adjustments to equipment as needed. Performs other related duties.

Concrete Paving Spreader Operator
Operates self - propelled machine(s) which may or may not travel on concrete paving forms, spreading and leveling fresh concrete to grade by use of augers and screeds. May oil, grease or otherwise service and make adjustments to equipment as necessary. Performs other related duties.

Concrete Rubber
Finishes the exposed surface of concrete masonry after the forms have been removed by patching holes and broken corners with fresh concrete, rubbing surface with abrasive stone to remove rough spots, and removing high spots and defective concrete with hand chisel and hammer or pneumatic chisel and powered abrasive stone. Performs other related duties.

Crane, Clamshell, Backhoe, Derrick, Dragline, Shovel Operator
A worker who operates a lattice boom type crane can hoist and move materials, raise and lower heavy weights and perform other related operations. May be crawler type or rubber tired. May include placement of rock riprap, clamshell, dragline, pipe and pile driving operations. May oil, grease or otherwise service and make necessary adjustments to equipment as needed. Performs other related duties.

Crusher and Screed Plant Operator
Operates a crusher or screening plant through which rock is run to break it into crushed stone for construction or to control flow of materials not needed. May include minor repairs and may service and make necessary adjustments to equipment as needed. Performs other related duties.

Electrician *3 Journeyman 2 Apprentice
Plans and directs the layout of metal electrical conduit, installs wiring systems, switch-panels, buss bars, works on overhead distribution systems and underground distribution systems. Performs other related duties.

Flagger
A worker who directs traffic in or around a construction site. May use signs or devices to direct traffic. May help assemble, position and clean devices or equipment used to direct traffic. Must be able to effectively communicate with the public. May require certain level of training by TXDOT specifications. Performs other related duties.

Form Builder/Setter, Structures
Fits together, aligns and sets to grade metal and wooden forms for placement of concrete. Forms may be wood, steel, aluminum, fiberglass or any other type of material. Checks forms while concrete is placed. May install miscellaneous materials integral to concrete structures. May set precast concrete elements. Prepares for slipforming traffic rail and median barrier. May install permanent metal deck forms. May work with power tools. Performs other related duties.

Form Liner, Paving & Curb
Fits together, panels align and sets to grade metal and wooden forms for placement of concrete. Works with survey crew to set stringline for panels or moles. Performs other related duties.

Form Setter, Paving & Curb
Fits together, align and set to grade metal and wooden forms for placement of concrete paving and curbs. Works with survey crew to set stringline for paving, curb and gutter curb. Performs other related duties.

Foundation Drill Operator, Crawler Mounted
Operates a hole-drilling machine that is crawler mounted. May include geotechnical operations such as soils nails, rock nails, tiebacks, anchors and jet grouting. May oil, grease or otherwise service and make necessary adjustments to equipment as needed. Performs other related duties.

Foundation Drill Operator, Truck Mounted
Operates a hole drilling machine that is mounted on the rear of a rubber tired vehicle or truck. May include soils nails, rock nails, tiebacks, anchors and jet grouting. Drive truck from location to location or may have laborer who drives truck. May oil, grease or otherwise service and make necessary adjustments to equipment as needed. Performs other related duties.

Front End Loader Operator
Operates a rubber tired, skid steer or crawler type tractor with an attached scoop type bucket on front end. Machine is used to load materials from stockpiles, excavation, charging batch plants, loading and unloading trucks. May be used with attachments in lieu of the bucket. May oil, grease or otherwise service and make necessary adjustments to equipment as needed. Performs other related duties.

Laborer, Common
A general term used on construction work covering many unskilled classifications requiring work of a physical nature. A laborer works with all crews doing everything from pick and shovel work to cleaning up lumber with hammer, shoveling and placing concrete, uses air tools, cleans concrete joints and fills joints with sealing compound from bucket or with hose and nozzle from a central source, applies coating of oil to inside face of forms, may help set and strip forms, unloads and transports reinforcing steel, cures newly poured concrete, helps lower pipe into ditch for pipelayers, builds fences, works with dirt crew keeping construction layout stakes out of the way of dirt moving equipment.

Laborer, Utility
Performs a variety of manual duties, usually working in a utility capacity by working on multiple projects and tasks where demands require workmen with varied experience and ability to work without close direction. Unloads and transports reinforcing steel. May occasionally place and tie reinforcing steel. Directs common laborers in pouring concrete. Erects shoring and bracing. Assists in installation of pipe. Installs, operate and maintains dewatering systems. May assist equipment operators in positioning machines, verifying grades and signaling operators. Directs truck drivers and scraper operators to dumping positions to maintain grades as directed. Uses power tools and air tools. May work as lead man in a labor crew. His performance of a wide variety of construction jobs distinguishes him from a helper assigned to a specific craft. Installs and maintains erosion control. Is more or less a general utility construction worker. May be second step in learning a skill, and may later become a helper in a specific classification. Performs other related duties.

Manhole Builder
Constructs a means of permanent access to water and sewer lines for maintenance purposes. This work consists of laying brick or concrete slab at bottom of ditch up to an approximate grade line near the surface of the ground. Brick or block is normally laid to form a nearly circular manhole. Brick or block is laid in by eyesight and is normally to a plumb line. Chipped or culled brick can be used quite often is. No effort may be made to keep mortar off the face of the brick and joints are not pointed. May apply coating of concrete to interior and exterior surface. Performs other related duties.

Mechanic
Assembles, set up, adjusts and maintains and repairs all types of construction equipment and trucks. He may perform the duties of a welder in repair of equipment. Performs other related duties.

Milling Machine Operator, Fine Grade
Operates a power-driven milling machine that planes material of the to roadbed and discharges the material into a hauling unit or a windrow. May oil, grease or otherwise service and make necessary adjustments to equipment as needed. Performs other related duties.

Mixer Operator
Performs a variety of manual duties, usually working in a utility capacity by working on multiple projects and tasks where demands require workmen with varied experience and ability to work without close direction. Unloads and transports reinforcing steel. May occasionally place and tie reinforcing steel. Directs common laborers in pouring concrete. Erects shoring and bracing. Assists in installation of pipe. Installs, operate and maintains dewatering systems. May assist equipment operators in positioning machines, verifying grades and signaling operators. Directs truck drivers and scraper operators to dumping positions to maintain grades as directed. Uses power tools and air tools. May work as lead man in a labor crew. His performance of a wide variety of construction jobs distinguishes him from a helper assigned to a specific craft. Installs and maintains erosion control. Is more or less a general utility construction worker. May be second step in learning a skill, and may later become a helper in a specific classification. Performs other related duties.

Motor Grader Operator, Rough
Operates a motor grader. Equipment is used to grade excavation and embankment and to lay asphalt, base and other materials. May blade haul roads and do other general motor grader work, but does not perform finish grade work to close specification tolerances. This operator may be a learner in the first phase of learning the skills of motor grader work. May oil, grease or otherwise service and make necessary adjustments to equipment as needed. Performs other related duties.

Motor Grader Operator
Operates a motor grader. Equipment is used to grade excavation and embankment and to lay asphalt, base and other materials. May blade haul roads and do other general motor grader work, but does not perform finish grade work to close specification tolerances. This operator may be a learner in the first phase of learning the skills of motor grader work. May oil, grease or otherwise service and make necessary adjustments to equipment as needed. Performs other related duties.

Oiler
A learner or semi-skilled worker who under the direction of the watch engineer. May oil and grease or otherwise service all engines and necessary equipment as needed. He may clean and paint engine room as needed. Performs other related duties.

Painter, Structures
Paints and stains structural steel and concrete surfaces of bridges, retaining walls, or other structures. Directs cleaning and abrasive blasting of surfaces prior to painting or staining. Performs other related duties.

Pavement Marking Machine Operator
Operates machine used in laying paint stripes or markers on all types of paving. Loads machine with appropriate materials and may walk or ride on machine. May oil, grease or otherwise service and make necessary adjustments to equipment as needed. Performs other related duties.

Piledriverman
Sets in place, aligns, plumbs directs driving of timber, concrete, steel, pipe and any other type of piling. Sets, drives and pulls steel, concrete and other types of sheet piling. Rigs pile and leads and bracing. Signals operator. Splices piles before and after driving. Directs pile cutoff. May direct jetting or drilling equipment in connection with installing piles to grade. Performs other related duties.

Pipelayer
Installs concrete, clay, steel, ductile iron, plastic, corrugated pipe and any other type of pipe for storm drainage, water lines, gas lines and sanitary sewer lines. Lays underground communication and electrical ducts. May install and set electrical ground boxes, hand holes, manholes, inlets and other structures. Caulks joints, makes threaded and flanged connections. Installs valves and other accessories. Performs other related duties.

Reinforcing Steel Setter, Paving
Works from plans to lay out and install reinforcing steel within forms or in mats of concrete paving. May direct unloading of material. Determines rigging required to complete work. Gives direction to reinforcing steel worker (helper) or common or utility laborers. May install miscellaneous materials integral to concrete structure or paving. May work with power tools. Performs other related duties.

Reinforcing Steel Setter, Structure
Works from plans to lay out and install reinforcing steel within forms or in mats of concrete paving. May direct unloading of material. Determines rigging required to complete work. Gives direction to reinforcing steel worker (helper) or common or utility laborers. May install miscellaneous materials integral to concrete structure or paving. May work with power tools. Performs other related duties.

Roller Operator, Pneumatic, Self-Propelled
Operates a self-propelled machine with either steel wheels pneumatic tires, which is used to compact and smooth all bituminous materials. May oil, grease or otherwise service and make necessary adjustments to equipment as needed. Performs other related duties.

Roller Operator, Steel Wheel, Flat Wheel/Tamping
Operates a self-propelled machine with either steel wheels or pneumatic tires which is used to compact earth fills, subgrade, flexible base and all other types of materials except bituminous. May oil, grease or otherwise service and make necessary adjustments to equipment as needed. Performs other related duties.

Roller Operator, Steel Wheel, Plant Mix Pavement
Operates a self-propelled machine with either steel wheels pneumatic tires, which is used to compact and smooth all bituminous materials. May oil, grease or otherwise service and make necessary adjustments to equipment as needed. Performs other related duties.

Scraper Operator
Operates a self-contained wheeled tractor scraper both self loading or assisted by crawler tractors or other scrapers.

Used to excavate and transport earth or other materials. May oil, grease or otherwise service and make necessary adjustments to equipment as needed. Performs other related duties.

Servicer
Drives a truck, which carries various fuels, oils, greases and filters. Must have knowledge of and is responsible for the correct oiling and greasing and changing of filters on equipment according to the manufacturers' specifications. Uses compressed air grease guns, wrenches and other tools. May make adjustments to clutches, brakes and other mechanical items. Keeps record of service preventive maintenance records. May have laborer assisting him. May require CDL if driving truck on public highways. Performs other related duties.

Sign Installer (PGM)
Sets forms, reinforcing steel, anchor bolts and pours concrete for Sign foundations. Fabricates and erects pipe and angle Frameworks by bolting, welding or other means prior to installation of signs that are normally prefabricated. Works from plans in location and drilling holes for proper location and alignment of signs. May direct hoisting of signs into place. Fastens signs to framework by bolting and other means. Locates and sets lighting brackets. May perform other work associated with signing projects. Supervises sign erector helper. Performs other related duties.

Slip Form Machine Operator
Cleans and seals joints requiring a hot or cold sealing compound in concrete paving, sidewalks, driveway and approach slabs. May oil, grease or make necessary repairs adjustments to equipment as needed. Performs other related duties.

Spreader Box operator
Operates spreader box by adjusting hopper and strike off blade so that the gravel, stone or other material may be spread to a specific depth on road surface during seal coat and surface treatment operations. May oil, grease or otherwise service and make necessary adjustments to equipment as needed. Performs other related duties.

Structural Steel Worker
Works from plans to lay out and install reinforcing steel within forms or in mats of concrete paving. May direct unloading of material. Determines rigging required to complete work. Gives direction to reinforcing steel worker (helper) or common or utility laborers. May install miscellaneous materials integral to concrete structure or paving. May work with power tools. Performs other related duties.

Tractor operator, Crawler Type
Operates a crawler tractor with a bulldozer mounted in front of chassis to level, distribute and push earth or other material. May operate a ripper attachment to break up rock or other hard material. May use a push block on front of tractor to push load scrapers. May oil, grease, or otherwise service and make minor repairs to equipment as needed. Performs other related duties.

Tractor Operator, Pneumatic
Operates a gasoline or diesel powered agricultural tractor that tows compaction rollers, plow, disc. water tanks, scrapers and other similar operations. May use other miscellaneous attachments. May oil, grease or otherwise service and make necessary adjustments to equipment as needed. Performs other related duties.

Traveling Mixer Operator
Drives a gasoline or diesel truck upon which is mounted a concrete mixer. Operates concrete mixer and dumps concrete on the grade, into forms or into concrete pumps or buckets. Cleans mixer drum. May require CDL license for on highway use. May service and make necessary adjustments for proper operation of equipment. Performs other related duties.

Truck driver, lowboy-Float
Drives a heavy-duty diesel powered truck to which is attached a trailer upon which heavy equipment is hauled. Driver is often required to operate heavy equipment to load or unload the lowboy. May require CDL license for on highway use. May service and make necessary adjustments for proper operation of equipment. Performs other related duties.

Truck driver, Single Axle, Heavy
Drive a light capacity truck for transporting loads of construction material. The truck is of single rear axle type, may have various kinds of beds attached, such as dump, flat bed, tank, etc. May require CDL license for driving on highway. May services and make necessary adjustments for proper operation equipment. Performs other related duties.

Truck driver, Single Axle-Light
Drive a light capacity truck for transporting loads of construction material. The truck is of single rear axle type, may have various kinds of beds attached, such as dump, flat bed, tank, etc. May require CDL license for driving on highway. May services and make necessary adjustments for proper operation equipment. Performs other related duties.

Truck Driver, Tandem Axle, Semi-Trailer
Drives a diesel-powered tractor pulling a semi trailer hauling materials. Hauls dirt, rock, aggregates or other material. May require CDL license for driving on highway. May service and make necessary adjustments for proper operation of equipment. Performs other related duties.

Work Zone Barricade Servicer
Fabricates, erects and maintains temporary traffic control devices, including arrow boards, signs, barricades, channelizing devices, barrels and all message boards. May operates a truck during traffic control operations.

WELDERS - Receives rate for craft being performed to which welding is incidental.

EXHIBIT "B"

CERTIFICATE FROM CONTRACTOR APPOINTING OFFICER OR EMPLOYEE TO SUPERVISE PAYMENT OF EMPLOYEES

Project Name _____

_____

E-Mail Address:_____

Project WBS#:_____Date_____

(I) (We) hereby certify that (I am) (we are) the **Prime Contractor** for _____

_____
(specify type of job)

in connection with construction of the above-mentioned Project, and that (I) (we) have appointed_____, whose signature appears below, to supervise the payment of (my) (our) employees beginning_____, 20___; that he/she is in a position to have full knowledge of the facts set forth in the payroll documents and in the statement of compliance required by the Copeland Act and the City of Houston, which he/she is to execute with (my) (our) full authority and approval until such time as (I) (we) submit to the City of Houston a new certificate appointing some other person for the purposes hereinabove stated.

_____ Phone:_____
(Identifying Signature of Appointee)

Attest: _____
(Name of Firm or Corporation)

By:_____ By:_____
(Signature) (Signature)

_____ _____
(Title) (Title)

NOTE: This certificate must be executed by an authorized officer of a corporation or by a member of a partnership, and shall be executed prior to and be submitted with the first payroll. Should the appointee be changed, a new certificate must accompany the first payroll for which the new appointee executes a statement of compliance required by the Copeland Act and the City of Houston.

EXHIBIT "C"

CERTIFICATE FROM SUBCONTRACTOR APPOINTING OFFICER OR EMPLOYEE TO SUPERVISE PAYMENT OF EMPLOYEES

Project Name _____

_____

E-Mail Address:_____

Project WBS#:_____Date_____

(I) (We) hereby certify that (I am) (we are) the **Sub Contractor** for _____

_____
(Specify work to be performed by subcontractor for this project)

in connection with construction of the above-mentioned Project, and that (I) (we) have appointed_____, whose signature appears below, to supervise the payment of (my) (our) employees beginning_____, 20___; that he/she is in a position to have full knowledge of the facts set forth in the payroll documents and in the statement of compliance required by the Copeland Act and the City of Houston, which he/she is to execute with (my) (our) full authority and approval until such time as (I) (we) submit to the City of Houston a new certificate appointing some other person for the purposes hereinabove stated.

_____ Phone:_____
(Identifying Signature of Appointee)

Attest: _____
(Name of Firm or Corporation)

By:_____ By:_____
(Signature) (Signature)

_____ _____
(Title) (Title)

NOTE: This certificate must be executed by an authorized officer of a corporation or by a member of a partnership, and shall be executed prior to and be submitted with the first payroll. Should the appointee be changed, a new certificate must accompany the first payroll for which the new appointee executes a statement of compliance required by the Copeland Act and the City of Houston.

END OF DOCUMENT

Document 00821

WAGE SCALE AND PAYROLL REQUIREMENTS FOR BUILDING CONSTRUCTION

Wage Scale Requirements

1.1 Contractor and its Subcontractors must pay the general prevailing wage rates for building construction for each craft or type of worker or mechanic employed in the execution of any building construction or repair under the Contract in accordance with Chapter 2258 of the Texas Government Code and City of Houston, Texas Ordinance Nos. 85-2070, 2000-1114, 2001-152, 2006-91 and 2006-168, and 2009-247 all as amended from time to time. City Council has determined the prevailing wage rate in the locality in which the work is being performed, which is set forth in Exhibit "A".

1.2 This prevailing wage rate does not prohibit the payment of more than the rates stated.

1.3 In bidding, Contractor warrants and represents that it has carefully examined the classifications for each craft or type of worker needed to execute the Contract and determined that such classifications in Exhibit "A" include all necessary categories to perform the work under the Contract.

1.4 The wage scale for building construction is to be applied to work on a building including an area within 5 feet of the exterior wall.

1.5 If Contractor believes that an additional classification for a particular craft or type of worker is necessary to perform work under the Contract, it must submit with its bid a request to the Contract Compliance Division of the Office of Business Opportunity ("OBO") to use an additional labor classification not listed in Exhibit "A" and specify the proposed new classification. OBO shall determine whether a proposed classification is already covered in Exhibit "A", and, if it is, specify which classification is appropriate. OBO's decision is conclusive. If OBO decides that a new classification is necessary, it will determine the appropriate prevailing wage rate for any resurveyed, amended, new, or additional craft or type of worker not covered by Exhibit "A". Such determination must be decided in accordance with procedures established by OBO, and in compliance with Chapter 2258 of the Texas Government Code and City of Houston, Texas Ordinance Nos. 85-2070, 2000-1114, 2001-152, 2006-91, 2006-168, and 2009-247 subject to City Council approval.

1.6 Contractor must not use any labor classification not covered by Exhibit "A" until such classification is established and approved for use by OBO.

1.7 A Contractor or Subcontractor who violates Chapter 2258 of the Texas Government Code must pay to the City, $60 per each worker employed for each calendar day or part of the day that the worker is paid less than the wage rates set forth in Exhibit "A".

1.8 The City may withhold money required to be withheld under Chapter 2258 of the Texas Government Code from the final payment to Contractor or earlier payments if City Council makes a determination that there is good cause to believe that Contractor has not complied with these provisions and Chapter 2258 of the Government Code, in which case the City may withhold the money at any time subsequent to the finding by City Council.

1.9 Contractor and Subcontractors must keep records specifying:

(1) the name and classification of each worker employed under the Contract; and

(2) the actual per diem wages paid to each worker, and the applicable hourly rate.

The records must be open at all reasonable hours for inspection by the officers and agents of the City.

1.10 The hourly cost of salary for non-exempt workers for labor in excess of 40 hours per worker per week, shall be calculated at 1.5 times the worker's base pay for the applicable craft and level.

Certified Payroll Requirements

2.1 Employees are paid weekly and payrolls are submitted weekly using the City of Houston's electronic payroll submission module, unless the prime Contractor has been instructed to do otherwise by the Office of Business Opportunity. When no work is done after a Contractor has started work, the Contractor is required to submit a weekly compliance statement indicating no work was performed. The payrolls must reflect the exact work and classification of the workers, the exact amount that they were paid. Workers must be paid the contracted amount (prevailing wage rates). The Contractor will be penalized $60.00 a day for each employee who is underpaid per Texas Government Code §2258.023 for all contracts.

2.2 Payrolls must be submitted electronically & indicate whether the worker worked inside or outside the building area when both wage rates are applicable to the project.

2.3 Payrolls must be submitted each week until all work by the contractor is complete and the electronic payroll submission is marked as final in the system.

2.4 Payrolls must cover a seven day period from the start of the work week and must be consecutive seven day periods until all work is complete.

2.5 Payrolls must have employees' names, addresses, last four digits of the social security numbers, and job classifications. The job classifications must be the same as the classifications on the prevailing wage rate schedule.

2.6 A payroll deduction authorization form must be submitted for each employee for

any deductions other than Federal and FICA taxes and court ordered child support.

2.7 Employees must be paid overtime (time and a half) for all hours worked over 40 hours a week on both federally and City-funded contracts.

2.8 The Contractor has the responsibility to comply with all Internal Revenue Service rules and regulations. Contractors who submit certified payrolls with **Owner Operators (truckers)** must submit a signed tax liability statement from each Owner Operator acknowledging their responsibility for Federal Income Tax and FICA reporting obligations.

2.9 If the Contractor wants to use the apprentice wage rates for an employee, the apprenticeship certificates must be submitted to the Office of Business Opportunity in advance of the employee working on the project and appearing on the payroll. Contractor must comply with posted number of journeymen to apprentices or helpers as listed on the wage rate.

2.10 A poster of the Prevailing Wage Rate Schedule should be clearly displayed on each job site from the time the project starts until the work is completed, or in case of annual service agreements, in the Contractor's office.

2.11 The Contractor shall submit the "Certificate from Contractor Appointing Officer or Employee to Supervise Payment of Employees" (Exhibit "B") to the Monitoring Authority listed in Document 00495 prior to final execution of the contract.

2.12 During the course of the work, Subcontractors shall submit the "Certificate from Subcontractor Appointing Officer or Employee to Supervise Payment of Employees" (Exhibit "C") to the Monitoring Authority listed in Document 00495.

2.13 Upon completion of the Project, as part of the contract-awarding department's total clearance process, the Office of Business Opportunity's Contract Compliance Section must review whether the Wage Rate and Payroll Requirements were met and report the results to the department.

REST OF PAGE INTENTIONALLY LEFT BLANK

EXHIBIT "A"

CITY OF HOUSTON, TEXAS
LABOR CLASSIFICATIONS AND PREVAILING WAGE RATES
FOR BUILDING CONSTRUCTION 2016

Worker Classification	Ratio	Base Rate	Fringe Benefit	Wage Total
Asbestos Worker/Insulator *	Ratio 1/1 - Apprentice	$22.75	$9.85	$32.60
Asbestos Abatement Worker (ceilings, walls ,floors only)	Ratio 1/3 – Helpers $9.10	$14.00	$0.00	$14.00
Boilermaker *	Ratio 5/1 - Apprentice	$23.14	$21.55	$44.69
Brick Layer * (see Mason Tender Brick)	Ratio 1/3 – Mason Tender Brick	$18.87	$0.00	$18.87
Carpenter * (including acoustical ceiling work)	Ratio 2/1 - Apprentice	$22.50	$8.33	$30.83
Cement Mason/Concrete Finisher *	Ratio 1/3 Mason Tender	$13.93	$0.00	$13.93
Drywall Finisher/Taper *	Ratio 1/3 – Helpers $8.54	$16.27	$3.66	$19.93
Drywall Hanger, * incl. metal studs installation	Ratio 1/3 – Helpers $9.46	$17.44	$3.93	$21.37
Electrician *(**Excluding Alarm & Low Voltage**)	Ratio 3/2 - Apprentice	$27.65	$7.70	$35.35
Electrician (**Alarm Installation**)	Ratio 1/1 - Apprentice	$17.97	$3.37	$21.31
Electrician (**Low Voltage**)	Ratio 1/3 – Helper $11.70	$18.00	$1.68	$19.68
Elevator Mechanic *	Ratio 1/1 - Apprentice	$38.52	$28.38	$66.90
Formbuilder/ Formsetter *	Ratio 1/3 – Helpers $7.67	$12.77	$0.00	$12.77
Glazier *	Ratio 1/3 – Helper $11.51	$14.92	$2.78	$17.70
Insulator * (Batt and Foam)	Ratio 1/3 – Helper $7.25	$22.02	$6.35	$28.37
Ironworker *(Reinforcing)	Ratio 1/3 – Helper $7.83	$14.87	$.73	$15.60
Ironworker *(Structural)	Ratio 1/3 – Helper $10.19	$22.02	$6.35	$28.37
Lather *	Ratio 1/3 – Helper $13.38	$19.73	$0.00	$19.73
Painter * (Brush, Roller, and Spray)	Ratio 1/3 – Helper $7.42	$17.24	$4.41	$21.65
Pipe Fitter *(**HVAC Pipe only**)	Ratio 1/1 - Apprentice	$29.63	$10.31	$39.94
Pipe Fitter *(**Excluding HVAC**)	Ratio 1/3 – Apprentice $12.40	$29.39	$10.31	$39.70
Plasterer *	Ratio 1/3 Plaster Tenders	$19.42	$1.00	$20.42
Plumber *	Ratio 3/2 - Apprentice	$30.29	$9.50	$39.79
Roofer *	Ratio 1/3 – Helper $7.85	$15.40	$0.00	$15.40
Sheet Metal Worker *(incl. HVAC duct and system install.)	Ratio 2/1 - Apprentice	$25.37	$12.39	$37.76
Sprinkler Fitter * (Fire sprinklers)	Ratio 1/1 – Apprentice	$26.36	$16.52	$42.88
Tile Finisher *	Ratio 1/3 – Helper $8.08	$12.00	$0.43	$12.43
Tile Setter *	Ratio 1/3 – Helper $10.91	$16.17	$0.00	$16.17
Truck Driver		$14.18	$0.00	$14.18
Laborers:				
Common Laborer		$11.76	$0.00	$11.76
Mason Tender (Bricklayer's Helper)		$13.47	$0.00	$13.47
Mason Tender (Cement /Concrete Finisher's Helper)		$10.48	$0.00	$10.48
Pipe Layer		$12.94	$0.00	$12.94
Plaster Tender (Plasterer's helper)		$12.90	$2.51	$15.41
Power Equipment Operator:				
Asphalt Paver		$16.03	$0.00	$16.03
Backhoe – Power Equipment Operator		$13.94	$0.00	$13.94
Crane – Power Equipment Operator		$34.85	$9.85	$44.70
Forklift – Power Equipment Operator		$16.00	$0.00	$16.00
Slab and Wall Saw – Power Equipment Operator		$15.54	$3.83	$19.37
Welders - Receive rate prescribed for craft performing operation in which welding is incidental				
*** When Apprentices are shown, Helpers cannot be utilized. See Definitions for allowable journeymen to apprentice /helpers.**				

Building Construction Prevailing Wages Classification Definitions

Asbestos Worker/Insulator * - Ratio 1Journeyman /1 Apprentice (1 Journeyman / 1 Apprentice) (Including application of all insulating materials, protective coverings, coatings and finishing to all type of mechanical systems). Applies insulating material to exposed surfaces of structures, such as air ducts, hot and cold pipes, storage tanks, and cold storage rooms: Reads blueprints and selects required insulation material (in sheet, tubular, or roll form), such as fiberglass, foam rubber, styrofoam, cork, or urethane, based on material's heat retaining or excluding characteristics. Brushes adhesives on or attaches metal adhesive-backed pins to flat surfaces as necessary to facilitate application of insulation material. Measures and cuts insulation material to specified size and shape for covering flat or round surfaces, using tape measure, knife, or scissors. Fits, wraps, or attaches required insulation material around or to structure, following blueprint specifications. Covers or seals insulation with preformed plastic covers, canvas strips, sealant, or tape to secure insulation to structure, according to type of insulation used and structure covered, using staple gun, trowel, paintbrush, or caulking gun.

Asbestos Abatement Worker * (Ceilings, Floors, & Walls only) Ratio 1 Journeyman /3 Helpers
Removes asbestos from ceilings, walls, beams, boilers, and other structures, following hazardous waste handling guidelines: Assembles scaffolding and seals off work area, using plastic sheeting and duct tape. Positions mobile decontamination unit or portable showers at entrance of work area. Builds connecting walkway between mobile unit or portable showers and work area, using hand tools, lumber, nails, plastic sheeting, and duct tape. Positions portable air evacuation and filtration system inside work area. Sprays chemical solution over asbestos covered surfaces, using tank with attached hose and nozzle, to soften asbestos. Cuts and scrapes asbestos from surfaces, using knife and scraper. Shovels asbestos into plastic disposal bags and seals bags, using duct tape. Cleans work area of loose asbestos, using vacuum, broom, and dustpan. Places asbestos in disposal bags and seals bags, using duct tape. Dismantles scaffolding and temporary walkway, using hand tools, and places plastic sheeting and disposal bags into transport bags. Seals bags, using duct tape, and loads bags into truck.

Boilermaker * - Ratio 5 Journeymen /1 Apprentice
Assembles, analyzes defects in, and repairs boilers, pressure vessels, tanks, and vats in field, following blueprints and using hand tools and portable power tools and equipment: Locates and marks reference points for columns or plates on foundation, using master straightedge, squares, transit, and measuring tape, and applying knowledge of geometry. Attaches rigging or signals crane operator to lift parts to specified position. Aligns structures or plate sections to assemble boiler frame, tanks, or vats, using plumb bobs, levels, wedges, dogs, or turnbuckles. Hammers, flame cuts, files, or grinds irregular edges of sections or structural parts to facilitate fitting edges together. Bolts or arc-welds structures and sections together. Positions drums and headers into supports and bolts or welds supports to frame. Aligns water tubes and connects and expands ends to drums and headers, using tube expander. Bells, beads with power hammer, or welds tube ends to ensure leak proof joints. Bolts or welds casing sections, uptakes, stacks, baffles, and such fabricated parts as chutes, air heaters, fan stands, feeding tube, catwalks, ladders, coal hoppers, and safety hatch to frame, using wrench. Installs manholes, hand holes, valves, gauges, and feed water connection in drums to complete assembly of water tube boilers. Assists in testing assembled vessels by pumping water or gas under specified pressure into vessel and observing instruments for evidence of leakage. Repairs boilers or tanks in field by unbolting or flame cutting defective sections or tubes, straightening plates, using torch or jacks, installing new tubes, fitting

and welding new sections and replacing worn lugs on bolts. May rivet and caulk sections of vessels, using pneumatic riveting and caulking hammers.

Bricklayer * (See Mason Tender) - Ratio 1Journeyman /3 Mason Tender Brick
Lays building materials, such as brick, structural tile, and concrete cinder, glass, gypsum, and terra cotta block (except stone) to construct or repair walls, partitions, arches, sewers, and other structures: Measures distance from reference points and marks guidelines on working surface to lay out work. Spreads soft bed (layer) of mortar that serves as base and binder for block, using trowel. Applies mortar to end of block and positions block in mortar bed. Taps block with trowel to level, align, and embed in mortar, allowing specified thickness of joint. Removes excess mortar from face of block, using trowel. Finishes mortar between brick with pointing tool or trowel. Breaks bricks to fit spaces too small for whole brick, using edge of trowel or brick hammer. Determines vertical and horizontal alignment of courses, using plumb bob, gauge line (tightly stretched cord), and level. Fastens brick or terra cotta veneer to face of structures, with tie wires embedded in mortar between bricks, or in anchor holes in veneer brick. May weld metal parts to steel structural members. May apply plaster to walls and ceiling, using trowel, to complete repair work.

Carpenter * (Including Acoustical Ceiling Work) - Ratio 2 Journeymen /1 Apprentice
Constructs, erects, installs, and repairs structures and fixtures of wood, plywood, and wallboard, using carpenter's hand tools and power tools, and conforming to local building codes: Studies blueprints, sketches, or building plans for information pertaining to type of material required, such as lumber or fiberboard, and dimensions of structure or fixture to be fabricated. Selects specified type of lumber or other materials. Prepares layout, using rule, framing square, and calipers. Marks cutting and assembly lines on materials, using pencil, chalk, and marking gauge. Shapes materials to prescribed measurements, using saws, chisels, and planes. Assembles cut and shaped materials and fastens them together with nails, dowel pins, or glue. Verifies trueness of structure with plumb bob and carpenter's level. Erects framework for structures and lays subflooring. Builds stairs and lays out and installs partitions and cabinetwork. Covers sub floor with building paper to keep out moisture and lays hardwood, parquet, and wood-strip-block floors by nailing floors to sub floor or cementing them to mastic or asphalt base. Applies shock-absorbing, sound-deadening, and decorative paneling to ceilings and walls. Fits and installs prefabricated window frames, doors, doorframes, weather stripping, interior and exterior trim, and finish hardware, such as locks, letter drops, and kick plates. Constructs forms and chutes for pouring concrete. Erects scaffolding and ladders for assembling structures above ground level. May weld metal parts to steel structural members.

Cement Mason/Concrete Finisher *(Mason Tender Cement/Concrete) - Ratio 1 Journeyman /3 Mason Tender Cement
Finisher; concrete floater Smooths and finishes surfaces of poured concrete floors, walls, sidewalks, or curbs to specified textures, using hand tools or power tools, including floats, trowels, and screeds: Signals concrete deliverer to position truck to facilitate pouring concrete. Moves discharge chute of truck to direct concrete into forms. Spreads concrete into inaccessible sections of forms, using rake or shovel. Levels concrete to specified depth and workable consistency, using hand held screed and floats to bring water to surface and produce soft topping. Smooths, and shapes surfaces of freshly poured concrete, using straightedge and float or power screed. Finishes concrete surfaces, using power trowel, or wets and rubs concrete with abrasive stone to impart finish. Removes rough or defective spots from concrete surfaces, using power grinder or chisel and hammer, and patches holes with fresh concrete or epoxy compound. Molds expansion joints and edges, using edging tools, jointers, and straightedge. May sprinkle colored stone chips, powdered steel, or coloring powder on concrete to produce prescribed finish. May produce rough concrete surface, using broom. May mix cement, using hoe or concrete-mixing machine. May direct sub

grade work, mixing of concrete, and setting of forms.

Drywall Finisher/Taper - Ratio 1Journeyman /3 Helpers
Wallboard and plasterboard; sheetrock taper; taper and bedder; taper and floater. Seals joints between plasterboard or other wallboards to prepare wall surface for painting or papering; Mixes sealing compound by hand or with portable electric mixer, and spreads compound over joints between boards, using trowel, broad knife, or spatula. Presses paper tape over joint to embed tape into compound and seal joint, or tapes joint, using mechanical applicator that spreads compound and embeds tape in one operation. Spreads and smooth's cementing material over tape, using trowel or floating machine to blend joint with wall surface. Sands rough spots after cement has dried. Fills cracks and holes in walls and ceiling with sealing compound. Installs metal molding at corners in lieu of sealant and tape. Usually works as member of crew. May apply texturing compound and primer to walls and ceiling preparatory to final finishing, using brushes, roller, or spray gun. May countersink nails or screws below surface of wall prior to applying sealing compound, using hammer or screwdriver.

Drywall Hanger - Ratio 1 Journeyman /3 Helpers
Dry-wall installer; gypsum dry-wall systems installer. Plans gypsum drywall installations, erects metal framing and furring channels for fastening drywall, and installs drywall to cover walls, ceilings, soffits, shafts, and movable partitions in residential, commercial, and industrial buildings: Reads blueprints and other specifications to determine method of installation, work procedures, and material, tool, and work aid requirements. Lays out reference lines and points for use in computing location and position of metal framing and furring channels and marks position for erecting metalwork, using chalk line. Measures, marks, and cuts metal runners, studs, and furring channels to specified size, using tape measure, straightedge and hand and portable power cutting tools. Secures metal framing to walls and furring channels to ceilings, using hand and portable power tools. Measures and marks cutting lines on drywall, using square, tape measure, and marking devices. Scribes cutting lines on drywall, using straightedge and utility knife and breaks board along cut lines. Fits and fastens board into specified position on wall, using screws, hand tools, portable power tools, or adhesive. Cuts openings into board for electrical outlets, vents, or fixtures, using keyhole saw or other cutting tools. Measures, cuts, assembles, and installs metal framing and decorative trim for windows, doorways, and vents. Fits, aligns, and hangs doors and installs hardware, such as locks and kick plates (Includes Installing Metal Studs).

Electrician (Excludes Low Voltage Wiring & Installation)* Ratio 3 Journeymen /2 Apprentice
Plans layout, installs, and repairs wiring, electrical fixtures, apparatus, and control equipment: Plans new or modified installations to minimize waste of materials, provide access for future maintenance, and avoid unsightly, hazardous, and unreliable wiring, consistent with specifications and local electrical codes. Prepares sketches showing location of wiring and equipment, or follows diagrams or blueprints, ensuring that concealed wiring is installed before completion of future walls, ceilings, and flooring. Measures, cuts, bends, threads, assembles, and installs electrical conduit, using tools, such as hacksaw, pipe threader, and conduit bender. Pulls wiring through conduit. Splices wires by stripping insulation from terminal leads, using knife or pliers, twisting or soldering wires together, and applying tape or terminal caps. Connects wiring to lighting fixtures and power equipment, using hand tools. Installs control and distribution apparatus, such as switches, relays, and circuit-breaker panels, fastening in place with screws or bolts, using hand tools and power tools. Connects power cables to equipment, such as electric range or motor, and installs grounding leads. Tests continuity of circuit to ensure electrical compatibility and safety of components, using testing instruments, such as ohmmeter, battery and buzzer, and oscilloscope. Observes functioning of installed equipment or system to detect hazards and need for adjustments, relocation, or replacement (Including Pulling Wire and Low Voltage Wiring and Installation of Fire Alarms,

Security Systems, Telephones, and Computers).

Electrician (Alarm Installation Only) * Ratio 1 Journeymen /1 Apprentice
Plans layout, installs, and repairs wiring, electrical fixtures, apparatus, and control equipment: Plans new or modified installations to minimize waste of materials, provide access for future maintenance, and avoid unsightly, hazardous, and unreliable wiring, consistent with specifications and local electrical codes. Prepares sketches showing location of wiring and equipment, or follows diagrams or blueprints, ensuring that concealed wiring is installed before completion of future walls, ceilings, and flooring. Measures, cuts, bends, threads, assembles, and installs electrical conduit, using tools, such as hacksaw, pipe threader, and conduit bender. Pulls wiring through conduit. Splices wires by stripping insulation from terminal leads, using knife or pliers, twisting or soldering wires together, and applying tape or terminal caps. Connects wiring to lighting fixtures and power equipment, using hand tools. Installs control and distribution apparatus, such as switches, relays, and circuit-breaker panels, fastening in place with screws or bolts, using hand tools and power tools. Connects power cables to equipment, such as electric range or motor, and installs grounding leads. Tests continuity of circuit to ensure electrical compatibility and safety of components, using testing instruments, such as ohmmeter, battery and buzzer, and oscilloscope. Observes functioning of installed equipment or system to detect hazards and need for adjustments, relocation, or replacement (Including Pulling Wire and Low Voltage Wiring and Installation of Fire Alarms, Security Systems, Telephones, and Computers).

Electrician (Low Voltage Wiring Only)* Ratio 1 Journeymen /3 Helpers
Plans layout, installs, and repairs wiring, electrical fixtures, apparatus, and control equipment: Plans new or modified installations to minimize waste of materials, provide access for future maintenance, and avoid unsightly, hazardous, and unreliable wiring, consistent with specifications and local electrical codes. Prepares sketches showing location of wiring and equipment, or follows diagrams or blueprints, ensuring that concealed wiring is installed before completion of future walls, ceilings, and flooring. Measures, cuts, bends, threads, assembles, and installs electrical conduit, using tools, such as hacksaw, pipe threader, and conduit bender. Pulls wiring through conduit. Splices wires by stripping insulation from terminal leads, using knife or pliers, twisting or soldering wires together, and applying tape or terminal caps. Connects wiring to lighting fixtures and power equipment, using hand tools. Installs control and distribution apparatus, such as switches, relays, and circuit-breaker panels, fastening in place with screws or bolts, using hand tools and power tools. Connects power cables to equipment, such as electric range or motor, and installs grounding leads. Tests continuity of circuit to ensure electrical compatibility and safety of components, using testing instruments, such as ohmmeter, battery and buzzer, and oscilloscope. Observes functioning of installed equipment or system to detect hazards and need for adjustments, relocation, or replacement (Including Pulling Wire and Low Voltage Wiring).

Elevator Mechanic * - Ratio 1 Journeyman /1 Apprentice
FOOTNOTES: a. - Employer contributes 8% of basic hourly rate for over 5 years' service and 6% of basic hourly rate for 6 months to 5 years' service as Vacation Pay Credit. Paid Holidays: New Year's Day; Memorial Day; Independence Day Labor Day; Thanksgiving Day; Friday after Thanksgiving Day; Christmas Day.

Erector; elevator installer; elevator mechanic. Assembles and installs electric and hydraulic freight and passenger elevators, escalators, and dumbwaiters, determining layout and electrical connections from blueprints: Studies blueprints and lays out location of framework, counterbalance rails, motor pump, cylinder, and plunger foundations. Drills holes in concrete or structural steel members with portable electric drill. Secures anchor bolts or welds brackets to support rails and framework, and verifies alignment with plumb bob and level. Cuts prefabricated sections of

framework, rails, and other elevator components to specified dimensions, using acetylene torch, power saw, and disk grinder. Installs cables, counterweights, pumps, motor foundations, escalator drives, guide rails, elevator cars, and control panels, using hand tools. Connects electrical wiring to control panels and electric motors. Installs safety and control devices. Positions electric motor and equipment on top of elevator shaft, using hoists and cable slings.

Formbuilder/Formsetter - Ratio 1Journeyman /3 Helpers
Constructs built-in-place or prefabricated wooden forms, according to specifications, for molding concrete structures: Studies blueprints and diagrams to determine type and dimension of forms to be constructed. Saws lumber to blueprint dimensions, using handsaw or power saw, and nails lumber together to make form panels. Erects built-in-place forms or assembles and installs prefabricated forms on construction site according to blueprint specifications, using hand tools, plumb rule, and level. Inserts spreaders and tie rods between opposite faces of form to maintain specified dimensions. Anchors and braces forms to fixed objects, using nails, bolts, anchor rods, steel cables, planks, and timbers.

Glazier - Ratio 1 Journeyman /3 Helpers
Installs glass in windows, skylights, store fronts, and display cases, or on surfaces, such as building fronts, interior walls, ceilings, and tabletops: Marks outline or pattern on glass, and cuts glass, using glasscutter. Breaks off excess glass by hand or with notched tool. Fastens glass panes into wood sash with glaziers points, and spreads and smoothes putty around edge of panes with knife to seal joints. Installs mirrors or structural glass on building fronts, walls, ceilings, or tables, using mastic, screws, or decorative molding. Bolts metal hinges, handles, locks, and other hardware to prefabricated glass doors. Sets glass doors into frame and fits hinges. May install metal window and doorframes into which glass panels are to be fitted. May press plastic adhesive film to glass or spray glass with tinting solution to prevent light glare. May install stained glass windows.

Insulator (Batt and Foam) - Ratio 1 Journeyman /3 Helpers
Applies batt and form insulation to walls, ceilings and other surfaces according to manufacturers specifications and blue print instructions. May use sealants such as cement plaster or asphalt compound to seal insulation; may spread concrete over floor slabs to form wearing floor: brushes adhesives, cuts insulating materials to specified shape to cover surfaces; uses tape or other sealants to adhere insulation to surfaces. May use staple gun, towel, paintbrushes and caulking guns.

Ironworker (Reinforcing) - Ratio 1 Journeyman/3 Helpers
Positions and secures steel bars in concrete forms to reinforce concrete; places rods in forms, spacing and fastening together with wire and pliers. Cuts bars using hacksaw, bar cutters or acetylene torch. Bends steel rods with hand tools or rod bending machine; reinforces concrete with wire mesh; welds reinforcing bars together.

Ironworker (Structural) - Ratio 1 Journeyman /3 Helpers
Erector; ironworker; steel erector; structural-iron erector; structural-iron worker; structural steel erector. Performs any combination of following duties to raise, place, and unite girders, columns, and other structural-steel members to form completed structures or structure frameworks, working as member of crew: Sets up hoisting equipment for raising and placing structural-steel members. Fastens steel members to cable of hoist, using chain, cable, or rope. Signals worker operating hoisting equipment to lift and place steel member. Guides member, using tab line (rope) or rides on member in order to guide it into position. Pulls, pushes, or pries steel members into approximate position while member is supported by hoisting device. Forces members into final position, using turnbuckles, crowbars, jacks, and hand tools. Aligns rivet holes in member with corresponding

holes in previously placed member by driving drift pins or handle of wrench through holes. Verifies vertical and horizontal alignment of members, using plumb bob and level.

Lather - Ratio 1 Journeyman /3 Helpers
Fastens wooden, metal, or rockboard lath to walls, ceilings, and partitions of buildings to provide supporting base for plaster, fireproofing, or acoustical material, using hand tools and portable power tools: Erects horizontal metal framework to which laths are fastened, using nails, bolts, and studgun. Drills holes in floor and ceiling, using portable electric tool, and drives ends of wooden or metal studs into holes to provide anchor for furring or rockboard lath. Wires horizontal strips to furring to stiffen framework. Cuts lath to fit openings and projections, using hand tools or portable power tools. Wires, nails, clips, or staples lath to framework, ceiling joists, and flat concrete surfaces. Bends metal lath to fit corners, or attaches preformed corner reinforcements. Wires plasterer's channels to overhead structural framework to provide support for plaster or acoustical ceiling tile.

Painter (Brush, Roller, and Spray) - Ratio 1Journeyman /3 Helpers
Applies coats of paint, varnish, stain, enamel, or lacquer to decorate and protect interior or exterior surfaces, trimmings, and fixtures of buildings and other structures: Reads work order or receives instructions from supervisor or homeowner regarding painting. Smoothes surfaces, using sandpaper, brushes, or steel wool, and removes old paint from surfaces, using paint remover, scraper, wire brush, or blowtorch to prepare surfaces for painting. Fills nail holes, cracks, and joints with caulk, putty, plaster, or other filler, using caulking gun and putty knife. Selects premixed paints, or mixes required portions of pigment, oil, and thinning and drying substances to prepare paint that matches specified colors. Removes fixtures, such as pictures and electric switchcovers, from walls prior to painting, using screwdriver. Spreads dropcloths over floors and room furnishings, and covers surfaces, such as baseboards, doorframes, and windows with masking tape and paper to protect surfaces during painting. Paints surfaces, using brushes, spray gun, or paint rollers. Simulates wood grain, marble, brick, or tile effects. Applies paint with cloth, brush, sponge, or fingers to create special effects. Erects scaffolding or sets up ladders to perform tasks above ground level.

Pipe fitter * (HVAC Pipe Only) - Ratio 1Journeymen /1 Apprentice (See Schedule included)
Lays out, assembles, installs, and maintains pipe systems, pipe supports, and related hydraulic and pneumatic equipment for steam, hot water, heating, cooling, lubricating, sprinkling, and industrial production and processing systems, applying knowledge of system operation, and following blueprints: Selects type and size of pipe, and related materials and equipment, such as supports, hangers, and hydraulic cylinders, according to specifications. Inspects work site to determine presence of obstructions and to ascertain that holes cut for pipe will not cause structural weakness. Plans installation or repair to avoid obstructions and to avoid interfering with activities of other workers. Cuts pipe, using saws, pipe cutter, hammer and chisel, cutting torch, and pipe cutting machine. Threads pipe, using pipe threading machine. Bends pipe, using pipe bending tools and pipe bending machine. Assembles and installs variety of metal and nonmetal pipes, tubes, and fittings, including iron, steel, copper, and plastic. Connects pipes, using threaded, caulked, soldered, brazed, fused, or cemented joints, and hand tools. Secures pipes to structure with brackets, clamps, and hangers, using hand tools and power tools. Installs and maintains hydraulic and pneumatic components of machines and equipment, such as pumps and cylinders, using hand tools. Installs and maintains refrigeration and air conditioning systems, including compressors, pumps, meters, pneumatic and hydraulic controls, and piping, using hand tools and power tools, and following specifications and blueprints. Increases pressure in pipe system and observes connected pressure gauge to test system for leaks.

Pipe Fitter * (Excluding HVAC Pipe) – Ratio 1Journeymen /3 Helpers
Lays out, assembles, installs, and maintains pipe systems, pipe supports, and related hydraulic and pneumatic equipment for steam, hot water, heating, cooling, lubricating, sprinkling, and industrial production and processing systems, applying knowledge of system operation, and following blueprints: Selects type and size of pipe, and related materials and equipment, such as supports, hangers, and hydraulic cylinders, according to specifications. Inspects work site to determine presence of obstructions and to ascertain that holes cut for pipe will not cause structural weakness. Plans installation or repair to avoid obstructions and to avoid interfering with activities of other workers. Cuts pipe, using saws, pipe cutter, hammer and chisel, cutting torch, and pipe cutting machine. Threads pipe, using pipe-threading machine. Bends pipe, using pipe bending tools and pipe bending machine. Assembles and installs variety of metal and nonmetal pipes, tubes, and fittings, including iron, steel, copper, and plastic. Connects pipes, using threaded, caulked, soldered, brazed, fused, or cemented joints, and hand tools. Secures pipes to structure with brackets, clamps, and hangers, using hand tools and power tools. Installs and maintains hydraulic and pneumatic components of machines and equipment, such as pumps and cylinders, using hand tools. Installs and maintains refrigeration and air conditioning systems, including compressors, pumps, meters, pneumatic and hydraulic controls, and piping, using hand tools and power tools, and following specifications and blueprints. Increases pressure in pipe system and observes connected pressure gauge to test system for leaks. May weld pipe supports to structural steel members. May observe production machines in assigned area of manufacturing facility to detect machinery malfunctions. May operate machinery to verify repair. May modify programs of automated machinery, such as robots and conveyors, to change motion and speed of machine, using teach pendant, control panel, or keyboard and display screen of robot controller and programmable controller. May be designated Steam Fitter (construction) when installing piping systems that must withstand high pressure

Plasterer * See Plaster Tender - Ratio 1 Journeyman /3 Plaster Tenders
Applies coats of plaster to interior walls, ceilings, and partitions of buildings, to produce finished surface, according to blueprints, architect's drawings, or oral instructions, using hand tools and portable power tools: Directs workers to mix plaster to desired consistency and to erect scaffolds. Spreads plaster over lath or masonry base, using trowel, and smoothes plaster with darby and float to attain uniform thickness. Applies scratch, brown, or finish coats of plaster to wood, metal, or board lath successively. Roughens undercoat with scratcher (wire or metal scraper) to provide bond for succeeding coats of plaster.

Plumber * (Excluding HVAC Pipe) - Ratio 3 Journeymen /2 Apprentice
Assembles, installs, and repairs pipes, fittings, and fixtures of heating, water, and drainage systems, according to specifications and plumbing codes: Studies building plans and working drawings to determine work aids required and sequence of installations. Inspects structure to ascertain obstructions to be avoided to prevent weakening of structure resulting from installation of pipe. Locates and marks position of pipe and pipe connections and passage holes for pipes in walls and floors, using ruler, spirit level, and plumb bob. Cuts openings in walls and floors to accommodate pipe and pipe fittings, using hand tools and power tools. Cuts and threads pipe, using pipe cutters, cutting torch, and pipe-threading machine. Bends pipe to required angle by use of pipe-bending machine or by placing pipe over block and bending it by hand. Assembles and installs valves, pipe fittings, and pipes composed of metals, such as iron, steel, brass, and lead, and nonmetals, such as glass, vitrified clay, and plastic, using hand tools and power tools. Joins pipes by use of screws, bolts, fittings, solder, plastic solvent, and caulks joints. Fills pipe system with water or air and reads pressure gauges to determine whether system is leaking. Installs and repairs plumbing fixtures, such as sinks, commodes, bathtubs, water heaters, hot water tanks, garbage disposal units, dishwashers, and water softeners. Repairs and maintains plumbing by

replacing washers in leaky faucets, mending burst pipes, and opening clogged drains.

Roofer - Ratio 1 Journeyman/3 Helpers
Covers roofs with roofing materials other than sheet metal, such as composition shingles or sheets, wood shingles, or asphalt and gravel, to waterproof roofs: Cuts roofing paper to size, using knife, and nails or staples it to roof in overlapping strips to form base for roofing materials. Installs gutters and downs spouts. Aligns roofing material with edge of roof, and overlaps successive layers, gauging distance of overlap with chalk line, gauge on shingling hatchet, or by lines on shingles. Fastens composition shingles or sheets to roof with asphalt, cement, or nails. Punches holes in slate, tile, terra cotta, or wooden shingles, using punch and hammer. Cuts strips of flashing and fits them into angles formed by walls, vents, and intersecting roof surfaces. When applying asphalt or tar and gravel to roof, mops or pours hot asphalt or tar onto roof base. Applies alternate layers of hot asphalt or tar and roofing paper until roof covering is as specified. Applies gravel or pebbles over top layer, using rake or stiff bristled broom.

Sheet metal worker * Ratio 2 Journeymen /1 Apprentice (Including Setting HVAC Duct & System Installs)
Fabricates, assembles, installs and repairs sheet metal products, including sheet metal roof (also see Roofer). Operates soldering and welding equipment to join together sheet metal parts. Seals seams and joints with sealant. Installs roof sheets, trims, flashing, gutters down spouts and other related items. Performs other related duties.

Sprinkler Fitter (Fire) * - Ratio 1 Journeyman /1 Apprentice
Lays out, assembles, installs, and maintains pipe systems, pipe supports, and related hydraulic and pneumatic equipment for steam, hot water, heating, cooling, lubricating, sprinkling, and industrial production and processing systems, applying knowledge of system operation, and following blueprints: Selects type and size of pipe, and related materials and equipment, such as supports, hangers, and hydraulic cylinders, according to specifications. Inspects work site to determine presence of obstructions and to ascertain that holes cut for pipe will not cause structural weakness. Plans installation or repair to avoid obstructions and to avoid interfering with activities of other workers. Cuts pipe, using saws, pipe cutter, hammer and chisel, cutting torch, and pipe cutting machine. Threads pipe, using pipe-threading machine. Bends pipe, using pipe bending tools and pipe bending machine. Assembles and installs variety of metal and nonmetal pipes, tubes, and fittings, including iron, steel, copper, and plastic. Connects pipes, using threaded, caulked, soldered, brazed, fused, or cemented joints, and hand tools. Secures pipes to structure with brackets, clamps, and hangers, using hand tools and power tools. Installs and maintains hydraulic and pneumatic components of machines and equipment, such as pumps and cylinders, using hand tools. Installs and maintains refrigeration and air conditioning systems, including compressors, pumps, meters, pneumatic and hydraulic controls, and piping, using hand tools and power tools, and following specifications and blueprints. Increases pressure in pipe system and observes connected pressure gauge to test system for leaks. May weld pipe supports to structural steel members. May observe production machines in assigned area of manufacturing facility to detect machinery malfunctions. May operate machinery to verify repair. May modify programs of automated machinery, such as robots and conveyors, to change motion and speed of machine, using teach pendant, control panel, or keyboard and display screen of robot controller and programmable controller.

Tile Finisher - Ratio 1 Journeyman /3 Helpers
Supplies and mixes construction materials for TILE SETTER (construction) 861.381-054, applies grout, and cleans installed tile: Moves tiles, tile setting tools, and work devices from storage area to installation site manually or using wheelbarrow. Mixes mortar and grout according to standard

formulas and request from TILE SETTER (construction), using bucket, water hose, spatula, and portable mixer. Supplies TILE SETTER (construction) with mortar, using wheelbarrow and shovel. Applies grout between joints of installed tile, using grouting trowel. Removes excess grout from tile joints with wet sponge and scrapes corners and crevices with trowel. Wipes surface of tile after grout has set to remove grout residue and polish tile, using nonabrasive materials. Cleans installation site, mixing and storage areas, and installation machines, tools, and equipment, using water and various cleaning tools. Stores tile setting materials, machines, tools, and equipment. May apply caulk, sealers, acid, steam, or related agents to caulk, seal, or clean installed tile, using various application devices and equipment. May modify mixing, grouting, grinding, and cleaning procedures according to type of installation or material used. May assist TILE SETTER (construction) to position and secure metal lath, wire mesh, or felt paper prior to installation of tile. May cut marked tiles to size, using power saw or tile cutter.

Tile Setter - Ratio 1 Journeyman /3 Helpers
Applies tile to walls, floors, ceilings, and promenade roof decks, following design specifications: Examines blueprints, measures and marks surfaces to be covered, and lays out work. Measures and cuts metal lath to size for walls and ceilings with tin snips. Tacks lath to wall and ceiling surfaces with staple gun or hammer. Spreads plaster base over lath with trowel and levels plaster to specified thickness, using screed. Spreads concrete on sub floor, with trowel and levels it with screed. Spreads mastic or other adhesive base on roof deck, using serrated spreader to form base for promenade tile. Cuts and shapes tile with tile cutters and biters. Positions tile and taps it with trowel handle to affix tile to plaster or adhesive base.

Truck Driver
Drives truck with capacity of more than 3 tons, to transport materials to and from specified destinations: Drives truck to destination, applying knowledge of commercial driving regulations and area roads. Prepares receipts for load picked up. Collects payment for goods delivered and for delivery charges. May maintain truck log, according to state and federal regulations. May maintain telephone or radio contact with supervisor to receive delivery instructions. May load and unload truck. May inspect truck equipment and supplies, such as tires, lights, brakes, gas, oil, and water. May perform emergency roadside repairs, such as changing tires, installing light bulbs, tire chains, and spark plugs. May position blocks and tie rope around items to secure cargo during transit.

Laborers

Common Laborer
Performs any combination of the following tasks in erecting, repairing and wrecking buildings; dig, spread and level dirt and gravel; lift carry and hold building materials, tools and supplies; clean tools, equipment, materials and work areas; mix, pour and spread concrete, asphalt, gravel and other materials; join, wrap and seal sections of pipe; routine non-machine tasks such as removing forms from set concrete, filling expansion joints with asphalt, and placing culverts in trench. May also signal construction equipment operators; measure distances from grade stakes, drive stakes and stretch lines; bolt, nail align and block up under forms; mix and finish poured concrete, erect scaffolding; spread paint or coating to seal surfaces; caulking compounds to seal surfaces; remove projections from concrete, and mount pipe hangers.

Mason Tender Brick (Bricklayer's Helper)

Mason Tender Cement (Concrete Mason's / Concrete Finisher's Helper)

Pipe layer
Lay pipe for storm or sanitation sewers, drains, and water mains. Perform any combination of the following tasks: grade trenches or culverts, position pipe, or seal joints.

Plaster Tender (Plaster's Helper)
Tends machine that pumps plaster or stucco through spray gun for application to ceilings, walls, and partitions of buildings: Starts and stops machine on signals from PLASTERER (construction). Fills hopper of machine with plaster. Turns valves to regulate pump and compressor. Assists in erecting scaffolds.

Power Equipment Operators

Asphalt Paver (operator)
Operator; bituminous-paving-machine operator; blacktop-paver operator; blacktop spreader; mechanical-spreader operator; paving-machine operator, asphalt or bituminous. Operates machine that spreads and levels hot-mix bituminous paving material on sub grade of highways and streets: Bolts extensions to screed to adjust width, using wrenches. Lights burners to heat screed. Starts engine and controls paving machine to push dump truck and maintain constant flow of asphalt into hopper. Observes distribution of paving material along screed and controls direction of screed to eliminate voids at curbs and joints. Turns valves to regulate temperature of asphalt flowing from hopper when asphalt begins to harden on screed.

Backhoe (operator)
Operates power-driven machine, equipped with movable shovel, to excavate or move coal, dirt, rock, sand, and other materials: Receives written or oral instructions from supervisor regarding material to move or excavate. Pushes levers and depresses pedals to move machine, to lower and push shovel into stockpiled material, to lower and dig shovel into surface of ground, and to lift, swing, and dump contents of shovel into truck, car, or onto conveyor, hopper, or stockpile. Observes markings on ground, hand signals, or grade stakes to remove material, when operating machine at excavation site.

Crane (operator)
Operates electric-, diesel-, gasoline-, or steam-powered guy-derrick or stiff-leg derrick (mast supported by fixed legs or tripod), to move products, equipment, or materials to and from quarries, storage areas, and processes, or to load and unload trucks or railroad cars: Pushes and pulls levers and depresses pedals to raise, lower, and rotate boom and to raise and lower load line in response to signals.

Forklift (operator)
Drives gasoline-, liquefied gas-, or electric-powered industrial truck equipped with lifting devices, such as forklift, boom, scoop, lift beam and swivel-hook, fork-grapple, clamps, elevating platform, or trailer hitch, to push, pull, lift, stack, tier, or move products, equipment, or materials in warehouse, storage yard, or factory: Moves levers and presses pedals to drive truck and control movement of lifting apparatus. Positions forks, lifting platform, or other lifting device under, over, or around loaded pallets, skids, boxes, products, or materials or hooks tow trucks to trailer hitch, and transports load to designated area. Unloads and stacks material by raising and lowering lifting device.

Slab & Wall Saw (See Related Power Equipment Operator Above)
Use associated power equipment operators already defined.

Apprentices
Apprentices may be used in any of the crafts listed above where noted, if they are currently certified in a program recognized by the Bureau of Apprenticeship and Training, U.S. Department of Labor, providing the proper ratio between journeyman and apprentice is observed. Apprentice certification certificates must be supplied with the first weekly payroll upon which the apprentice's name appears.

Helper (65% of the journeyman classification)
(Must not exceed 3 helpers to 1 journeyman)
A Helper is a semi-skilled worker (rather than a skilled journeyman) who works under the direction of and assists a journeyman. Under the journeyman's direction and supervision, the helper performs a variety of duties to assist the journeyman such as preparing, carrying, and furnishing equipment, supplies and maintaining them in order; cleaning and preparing work areas; lifting, positioning, and holding materials or tools; and other related semi-skilled tasks as directed by the journeyman. A helper may use the tools of the trade at and under the direction of the journeyman. The particular duties performed by a helper vary according to area practice. The journeyman must work in close proximity to the location of the helpers work area. The helpers wage rate shall be calculated at no less than 65% of the prevailing wage for that journeyman's classification.

Helper who assists more than one journeyman craft should be listed with the notation indicating each journeyman craft classification they assist.

WELDERS - Receive rate prescribed for craft performing operation to which welding is incidental.

Pipe fitters * Apprentice Schedule (Excluding HVAC Pipe)

Journeyma	Indentured Apprentice	Apprentice Applicant	Total
1	1	0	1 to 1
3	2	1	3 to 3
5	3	2	5 to 5
8	4	3	8 to 7
12	5	4	12 to 9
16	6	5	16 to 11
20	7	6	20 to 13
25	8	7	25 to 15
30	9	8	30 to 17
40	10	9	40 to 19
50	11	10	50 to 21

NOTE: Continue after 50 Journeyman — ONE (1) Indentured Apprentice and one (1) Apprentice Applicant for every ten (10) Journeyman

---

*** When Apprentices are shown, Helpers cannot be utilized.**

APPRENTICES (see definitions)

Registered Apprenticeship Ratios

For All Apprentices

Apprentice duties consist but are not limited to reading blue prints, lay out, fabrication, installation, and assembly. Other duties are the setting up and operation of fabrication machines, using hand tools, power tools, lifting/handling devices, sealing if necessary according to their particular craft. Apprentices also are trained in the preparation process of a job that include but not limited to staging, planning, distribution, and sectioning of materials. Apprentices may be used in any of the crafts listed where noted on the Prevailing Wage Rate Schedule, if they are currently certified in a program recognized by the Bureau of Apprenticeship and Training, U.S. Department of Labor, providing the proper ratio between journeyman and apprentice is observed. Apprentice certification certificates must be supplied with the first weekly payroll upon which the apprentice's name appears. Helpers or Laborers cannot be utilized when Apprentices are shown.

Asbestos Worker / Insulator

City of Houston allows the use of 1 Journeyman and 1 Apprentice, the Apprentice can be used with the first Journeyman. No other Apprentices can be added until the 2th Journeyman is added. All Apprentices are to be under the direct supervision of a Journeyman.
1 Journeyman w/ 1 Apprentice
2 Journeymen w/ 2 Apprentices

Boilermakers

City of Houston allows the use of 5 Journeymen and 1 Apprentice, the Apprentice can be used with the first Journeyman. No other Apprentices can be added until the 6th Journeyman is added. All Apprentices are to be under the direct supervision of a Journeyman.
1-5 Journeymen w/ 1 Apprentice
6-10 Journeymen w/ 2 Apprentices

Carpenter

City of Houston allows the use of 2 Journeymen and 1 Apprentice, the Apprentice can be used with the first Journeyman. No other Apprentices can be added until the 4th Journeyman is added. All Apprentices are to be under the direct supervision of a Journeyman.
1-2 Journeymen w/ 1 Apprentice
3-4 Journeymen w/ 2 Apprentices
5-6 Journeymen w/ 3 Apprentices

Electrician

City of Houston allows the use of 3 Journeymen and 2 Apprentices, the Apprentice can be used with the first Journeyman. No other Apprentices can be added until the 3rd Journeyman is added. All Apprentices are to be under the direct supervision of a Journeyman. All Journeymen and Apprentices must hold a current license from the State of Texas.

1 Journeyman w/ 1 Apprentice
2 Journeymen w/ 1 Apprentice
3 Journeymen w/ 2 Apprentices
4 Journeymen w/ 3 Apprentices
5 Journeymen w/ 3 Apprentices
6 Journeymen w/ 4 Apprentices
7 Journeymen w/ 4 Apprentices
8 Journeymen w/ 4 Apprentices
9 Journeymen w/ 4 Apprentices
10 Journeymen w/ 5 Apprentices

Plumbers

City of Houston allows the use of 3 Journeymen and 2 Apprentices, the Apprentice can be used with the first Journeyman. No other Apprentices can be added until the 3rd Journeyman is added. All Apprentices are to be under the direct supervision of a Journeyman. All Journeymen and Apprentices must hold a current license from the State of Texas.

1 Journeyman w/ 1 Apprentice
2 Journeymen w/ 1 Apprentice
3 Journeymen w/ 2 Apprentices
4 Journeymen w/ 3 Apprentices
5 Journeymen w/ 3 Apprentices
6 Journeymen w/ 4 Apprentices
7 Journeymen w/ 4 Apprentices
8 Journeymen w/ 4 Apprentices
9 Journeymen w/ 4 Apprentices
10 Journeymen w/ 5 Apprentices

Sprinkler Fitter

City of Houston allows the use of 1 Journeyman and 1 Apprentice, the Apprentice can be used with the first Journeyman. No other Apprentices can be added until the 2th Journeyman is added. All Apprentices are to be under the direct supervision of a Journeyman.

1 Journeyman w/ 1 Apprentice
2 Journeymen w/ 2 Apprentices

Sheetmetal Worker

City of Houston allows the use of 2 Journeymen and 1 Apprentice, the Apprentice can be used with the first Journeyman. No other Apprentices can be added until the 4th Journeyman is added. All Apprentices are to be under the direct supervision of a Journeyman.

1-2 Journeymen w/ 1 Apprentice
3-4 Journeymen w/ 2 Apprentices
5-6 Journeymen w/ 3 Apprentices

Pipefitter

City of Houston allows the use of 1 Journeymen and 1 Apprentice, the Apprentice can be used with the first Journeyman. No other Apprentices can be added until the 4th Journeyman is added. All Apprentices are to be under the direct supervision of a Journeyman.

1 Journeyman w/ 1 Apprentice
2 Journeymen w/ 1 Apprentice
3 Journeymen w/ 2 Apprentices
4 Journeymen w/ 3 Apprentices
5 Journeymen w/ 3 Apprentices
6 Journeymen w/ 4 Apprentices
7 Journeymen w/ 4 Apprentices
8 Journeymen w/ 4 Apprentices
9 Journeymen w/ 4 Apprentices
10 Journeymen w/ 5 Apprentices

HELPER (see definitions)

(Must not exceed 3 helpers to 1 journeyman)

A Helper is a semi-skilled laborer (rather than a skilled journeyman) who works under the direction of and assists a journeyman. Under the journeyman's direction and supervision, the helper performs a variety of duties to assist the journeyman such as preparing, carrying, and furnishing equipment, supplies and maintaining them in order; cleaning and preparing work areas; lifting, positioning, and holding materials or tools; and other related semi-skilled tasks as directed by the journeyman. A helper may use the tools of the trade at and under the direction of the journeyman. The particular duties performed by a helper vary according to area practice. The journeyman must work in close proximity to the location of the helpers work area. The helper's wage rate shall be calculated at no less than 65% of the prevailing wage for that journeyman's classification. Helper who assists more than one journeyman craft should be listed with the notation indicating each journeyman craft classification they assist.

Welders
Receive rate prescribed for craft performing operation is which welding is incidental

Pipefitters * Apprentice Schedule (Excluding HVAC Pipe)

NOTE: Continue after 50 Journeyman - ONE (1) Indentured Apprentice and one (1) Apprentice Applicant for every ten (10) Journeyman

Journeyman	Indentured Apprentice	Apprentice Applicant	Total
1	1	0	1 to 1
3	2	1	3to 3
5	3	2	5 to 5
8	4	3	8 to 7
12	5	4	12 to 9
16	6	5	16 to 11
20	7	6	20 to 13
25	8	7	25 to 15
30	9	8	30 to 17
40	10	9	40 to 19
50	11	10	50 to 21

When Apprentices are shown, Helpers cannot be utilized.

If there are questions as to the classification of a worker, contact the Contract Compliance Officer in writing with a description of the work to be performed. After review the Contract Compliance Officer will respond in writing with the classification and wage rate to be paid the worker in question.

Fringe Benefits

If the worker is not receiving fringe benefits, they must be paid in cash if noted on the prevailing wage schedule along with the base rate. The term wages means the basic hourly rate of pay; any contribution irrevocably made by a contractor or subcontractor to a trustee or to a third person

pursuant to a bona fide fringe benefit fund, plan, or program; and the rate of costs to the contractor or subcontractor which may be reasonably anticipated in providing bona fide fringe benefits to laborers and mechanics pursuant to an enforceable commitment to carry out a financially responsible plan of program, which was communicated in writing to the laborers and mechanics affected. The fringe benefits enumerated in the Davis-Bacon Act include medical or hospital care, pensions on retirement or death, compensation for injuries or illness resulting from occupational activity, or insurance to provide any of the foregoing; unemployment benefits; life insurance, disability insurance, sickness insurance, or accident insurance; vacation or holiday pay; defraying costs of apprenticeship or other similar programs; or other bona fide fringe benefits. Fringe benefits do not include benefits required by other Federal, State, or local law. The prevailing wages (including fringe benefits) as adopted for this contract are based upon a survey performed under the Davis-Bacon Act. Thus determinations in regard to fringe benefits, to the extent practicable, will be based upon the standards set forth in the following federal regulations.

Title 29, Code of Federal Regulations, Part 4
Labor Standards for Federal Service Contracts

(29 CFR 4.169-4.171)

29 CFR 4.170 - Furnishing fringe benefits or equivalents.

(a) General. Fringe benefits required under the Act shall be furnished, separate from and in addition to the specified monetary wages, by the contractor or subcontractor to the employees engaged in performance of the contract, as specified in the determination of the Secretary or his authorized representative and prescribed in the contract documents. Section 2(a)(2) of the Act provides that the obligation to furnish the specified benefits "may be discharged by furnishing any equivalent combinations of fringe benefits or by making equivalent or differential payments in cash under rules and regulations established by the Secretary." The governing rules and regulations for furnishing such equivalents are set forth in Sec. 4.177 of this subpart. An employer cannot offset an amount of monetary wages paid in excess of the wages required under the determination in order to satisfy his fringe benefit obligations under the Act, and must keep appropriate records separately showing amounts paid for wages and amounts paid for fringe benefits.
(b) Meeting the requirement, in general. The various fringe benefits listed in the Act and in Sec. 4.162(a) are illustrative of those which may be found to be prevailing for service employees in a particular locality. The benefits which an employer will be required to furnish employees performing on a particular contract will be specified in the contract documents. A contractor may dispose of certain of the fringe benefit obligations which may be required by an applicable fringe benefit determination, such as pension, retirement, or health insurance, by irrevocably paying the specified contributions for fringe benefits to an independent trustee or other third person pursuant to an existing "bona fide" fund, plan, or program on behalf of employees engaged in work subject to the Act's provisions. Where such a plan or fund does not exist, a contractor must discharge his obligation relating to fringe benefits by furnishing either an equivalent combination of "bona fide" fringe benefits or by making equivalent payments in cash to the employee, in accordance with the regulations in Sec. 4.177.

29 CFR 4.171 – "Bona fide" fringe benefits.

(a) To be considered a ``bona fide" fringe benefit for purposes of the Act, a fringe benefit plan, fund, or program must constitute a legally enforceable obligation, which meets the

following criteria:

(1) The provisions of a plan, fund, or program adopted by the contractor, or by contract as a result of collective bargaining, must be specified in writing, and must be communicated in writing to the affected employees. Contributions must be made pursuant to the terms of such plan, fund, or program. The plan may be either contractor-financed or a joint contractor employee contributory plan. For example, employer contributions to Individual Retirement Accounts (IRAs) approved by IRS are permissible. However, any contributions made by employees must be voluntary, and if such contributions are made through payroll deductions, such deductions must be made in accordance with Sec. 4.168. No contribution toward fringe benefits made by the employees themselves, or fringe benefits provided from monies deducted from the employee's wages may be included or used by an employer in satisfying any part of any fringe benefit obligation under the Act.

(2) The primary purpose of the plan must be to provide systematically for the payment of benefits to employees on account of death, disability, advanced age, retirement, illness, medical expenses, hospitalization, supplemental unemployment benefits, and the like.

(3) The plan must contain a definite formula for determining the amount to be contributed by the contractor and a definite formula for determining the benefits for each of the employees participating in the plan.

(4) Except as provided in paragraph (b), the contractor's contributions must be paid irrevocably to a trustee or third person pursuant to an insurance agreement, trust or other funded arrangement. The trustee must assume the usual fiduciary responsibilities imposed upon trustees by applicable law. The trust or fund must be set up in such a way that the contractor will not be able to recapture any of the contributions paid in nor in any way divert the funds to its own use or benefit.

(5) Benefit plans or trusts of the types listed in 26 U.S.C. 401(a) which are disapproved by the Internal Revenue Service as not satisfying the requirements of section 401(a) of the Internal Revenue Code or which do not meet the requirements of the Employee Retirement Income Security Act of 1974, 29 U.S.C. 1001, et seq. and regulations thereunder, are not deemed to be ``bona fide" plans for purposes of the Service Contract Act.

(6) It should also be noted that such plans must meet certain other criteria as set forth in Sec. 778.215 of 29 CFR part 778 in order for any contributions to be excluded from computation of the regular rate of pay for overtime purposes under the Fair Labor Standards Act (Secs. 4.180-4.182).

(b)(1) Unfunded self-insured fringe benefit plans (other than fringe benefits such as vacations and holidays which by their nature are normally unfunded) under which contractors allegedly make "out of pocket" payments to provide benefits as expenses may arise, rather than making irrevocable contributions to a trust or other funded arrangement as required under Sec. 4.171(a)(4), are not normally considered "bona fide" plans or equivalent benefits for purposes of the Act.

(2) A contractor may request approval by the Administrator of an unfunded self-insured plan in order to allow credit for payments under the plan to meet the fringe benefit requirements of the Act. In considering whether such a plan is bona fide, the Administrator will consider such factors as whether it could be reasonably anticipated to provide the prescribed benefits, whether it represents a legally enforceable commitment to provide such benefits, whether it is carried out under a financially responsible program, and whether the plan has been communicated to the employees in writing. The Administrator in his/her discretion may

direct that assets be set aside and preserved in an escrow account or that other protections be afforded to meet the plan's future obligation.

(c) No benefit required by any other Federal law or by any State or local law, such as unemployment compensation, workers' compensation, or social security, is a fringe benefit for purposes of the Act.

(d) The furnishing to an employee of board, lodging, or other facilities under the circumstances described in Sec. 4.167, the cost or value of which is creditable toward the monetary wages specified under the Act, may not be used to offset any fringe benefit obligations, as such items and facilities are not fringe benefits or equivalent benefits for purposes of the Act.

(e) The furnishing of facilities which are primarily for the benefit or convenience of the contractor or the cost of which is properly a business expense of the contractor is not the furnishing of a "bona fide" fringe benefit or equivalent benefit or the payment of wages. This would be true of such items, for example, as relocation expenses, travel and transportation expenses incident to employment, incentive or suggestion awards, and recruitment bonuses, as well as tools and other materials and services incidental to the employer's performance of the contract and the carrying on of his business, and the cost of furnishing, laundering, and maintaining uniforms and/or related apparel or equipment where employees are required by the contractor, by the contractor's Government contract, by law, or by the nature of the work to wear such items. See also Sec. 4.168.

(f) Contributions by contractors for such items as social functions or parties for employees, flowers, cards, or gifts on employee birthdays, anniversaries, etc. (sunshine funds), employee rest or recreation rooms, paid coffee breaks, magazine subscriptions, and professional association or club dues, may not be used to offset any wages or fringe benefits specified in the contract, as such items are not ``bona fide" wages or fringe benefits or equivalent benefits for purposes of the Act.

EXHIBIT "B"

CERTIFICATE FROM CONTRACTOR APPOINTING OFFICER OR EMPLOYEE TO SUPERVISE PAYMENT OF EMPLOYEES

Project Name _____

_____

E-mail address_____

Project WBS#:_____Date_____

(I) (We) hereby certify that (I am) (we are) the **Prime Contractor** for _____

_____
(specify type of job)

in connection with construction of the above-mentioned Project, and that (I) (we) have appointed_____, whose signature appears below, to supervise the payment of (my) (our) employees beginning_____, 20___; that he/she is in a position to have full knowledge of the facts set forth in the payroll documents and in the statement of compliance required by the Copeland Act and the City of Houston, which he/she is to execute with (my) (our) full authority and approval until such time as (I) (we) submit to the City of Houston a new certificate appointing some other person for the purposes hereinabove stated.

_____ Phone:_____
(Identifying Signature of Appointee)

Attest: _____
(Name of Firm or Corporation)

By:_____ By:_____
(Signature) (Signature)

_____ _____
(Title) (Title)

NOTE: This certificate must be executed by an authorized officer of a corporation or by a member of a partnership, and shall be executed prior to and be submitted with the first payroll. Should the appointee be changed, a new certificate must accompany the first payroll for which the new appointee executes a statement of compliance required by the Copeland Act and the City of Houston.

EXHIBIT "C"

CERTIFICATE FROM SUBCONTRACTOR APPOINTING OFFICER OR EMPLOYEE TO SUPERVISE PAYMENT OF EMPLOYEES

Project Name _____

_____

E-mail address_____

Project WBS#:_____Date_____

(I) (We) hereby certify that (I am) (we are) the **Sub Contractor** for _____

_____
(Specify work subcontractor will be performing on this project)

in connection with construction of the above-mentioned Project, and that (I) (we) have appointed_____, whose signature appears below, to supervise the payment of (my) (our) employees beginning_____, 20___; that he/she is in a position to have full knowledge of the facts set forth in the payroll documents and in the statement of compliance required by the Copeland Act and the City of Houston, which he/she is to execute with (my) (our) full authority and approval until such time as (I) (we) submit to the City of Houston a new certificate appointing some other person for the purposes hereinabove stated.

_____ Phone:_____
(Identifying Signature of Appointee)

Attest: _____
(Name of Firm or Corporation)

By:_____ By:_____
(Signature) (Signature)

_____ _____
(Title) (Title)

NOTE: This certificate must be executed by an authorized officer of a corporation or by a member of a partnership, and shall be executed prior to and be submitted with the first payroll. Should the appointee be changed, a new certificate must accompany the first payroll for which the new appointee executes a statement of compliance required by the Copeland Act and the City of Houston.

END OF DOCUMENT

Document 00830

TRENCH SAFETY GEOTECHNICAL INFORMATION

1.0 DOCUMENT INCLUDES

A. Trench Safety Geotechnical Information: Geotechnical information obtained for use in design of the trench safety system is included as an attachment to this document.

2.0 RELATED DOCUMENTS

A. Section 02260 - Trench Safety Systems.

END OF DOCUMENT

GEOTEST ENGINEERING, INC.

Geotechnical Engineers & Materials Testing

5600 Bintliff Drive Houston, Texas 77036 Telephone: (713) 266-0588
Fax: (713) 266-2977

Job No. 1140209501
Trench Safety Report
March 18, 2016

Ms. Sarah M. Berkey, P.E.
Project Manager
Carollo Engineers, Inc.
10375 Richmond Avenue, Suite 1625
Houston, Texas 77042

Reference: Trench Safety Design Considerations
Clearwell Condition Assessment and
Replacement of Selected Valves and Actuators at EWPP
WBS No. S-000056-0070-4
Houston, Texas

Dear Ms. Berkey:

We are pleased to present our geotechnical information for trench safety for the referenced project.

For trench excavation, it is essential to maintain the stability of the sides and base and not to disturb the soil below the excavation grade. This is necessary to prevent any damage to adjacent facilities as a result of either vertical or lateral movements of the soil. In addition, a satisfactory excavation procedure must include an adequate construction dewatering system to lower and maintain the water level at least 3 feet below the lowest excavation grade or a minimum of 5 feet below prevailing level of backfill during backfilling. This will minimize the potential for softening or "boiling" of the base support soil.

Trench Excavation. The following subsections provide information for the design and construction of the proposed box culvert that will be by installed by open cut method of construction.

Geotechnical Parameters. Based on the soil conditions revealed by the borings B-8 and B-9, geotechnical parameters were developed for the design of open cut construction for proposed box culvert. The design parameters are provided in Table 1. For design, the groundwater level should be assumed to exist at the ground surface.

Excavation Stability. The open excavation may be shored or laid back to a stable slope or supported by some other equivalent means used to provide safety for workers and adjacent structures, if any. The excavating operations should be in accordance with OSHA Standards, OSHA 2207, Subpart P, latest revision and the City of Houston Standard Specification.

- Excavation Shallower Than 5 Feet - Excavations that are less than 5 feet deep **(critical height)** should be effectively protected when an indication of dangerous ground movement is anticipated.

- Excavations Deeper Than 5 Feet - Excavations that are deeper than 5 feet (if any) should be sloped, shored, sheeted, braced or laid back to a stable slope or supported by some other equivalent means or protection such that workers are not exposed to moving ground or cave-ins. The slopes and shoring should be in accordance with the trench safety requirements as per OSHA Standards. The following items provide design criteria for excavation stability.

(i) OSHA Soil Type. Based on the soil conditions revealed by borings drilled for this study and assumed groundwater level at surface, OSHA soil type "C" should be used for determination of allowable maximum slope and/or the design of shoring along the alignment for full proposed depth of open excavation. For shoring deeper than 20 feet (if needed), an engineering evaluation is required and deeper soil borings will be needed.

(ii) Excavation Support Earth Pressure. Based on the subsurface conditions indicated by our field investigation and laboratory testing results, excavation support earth pressure diagrams were developed and are presented on Figures 1.1 and 1.2. This pressure diagram can be used for the design of temporary trench bracing. For a trench box, a lateral earth pressure resulting from an equivalent fluid with a unit weight of 94 pcf can be used. The effects of any surcharge loads at the ground surface should be added to the computed lateral earth pressures. A surcharge load, q, will typically result in a lateral load equal to 0.5 q. The above value of equivalent fluid pressure is based on assumption that the groundwater level is near the ground surface, since these

conditions may exist after a heavy rain or flooding.

(iii) Bottom Stability. In braced cuts, if tight sheeting is terminated at the base of the cut, the bottom of the excavation can become unstable. The parameters that govern the stability of the excavation base are the soil shear strength and the differential hydrostatic head between the groundwater level within the retained soils and the groundwater level at the interior of the trench excavation. For cut in cohesive soils as predominantly encountered for the proposed excavation depths, the bottom stability can be evaluated as outlined on Figure 2. However, due to presence of sandy silt at depths 4 feet to 6 feet in boring B-9, the excavation should be performed after dewatering to avoid bottom stability problems.

Groundwater Control. Excavations for the overflow structure and box culvert may encounter groundwater seepage to varying degrees depending upon the groundwater conditions at the time of construction and the location and depth of the trench. Based on the soil conditions identified in the borings, all the excavations will be in cohesive soils with interbedded cohesionless soils. In general for cohesive soils the groundwater if encountered may be managed by collection in excavation bottom sumps for pumped disposal. In cohesionless soils such as sandy silt as encountered between the depths of 4 to 6 feet in boring B-9 dewatering such as vacuum well points may be required to lower the ground water level at least 5 feet below the bottom of excavation. Due to the presence of relatively thin layer (2-foot thick) sandy silt layer, the groundwater may be controlled by using eductor well system if it can be successfully lowered 5 feet below the excavation bottom; otherwise, alternatively installing continuous interlock (water tight) sheet piling with trench bottom sumps for pumped disposal.

It is recommended that the actual groundwater conditions should be verified by the contractor at the time of construction and that groundwater control should be performed in general accordance with the City of Houston Standard Specifications, Section 01578.

We appreciate this opportunity to be of service to you. If you have any questions regarding the report, or if we can be of further service to you, please call us.

Sincerely,
GEOTEST ENGINEERING, INC.
TBPE Registration No. F-410

Naresh Kolli, P.E.
Assistant Project Manager

STATE OF TEXAS
NARESH KOLLI
110928
LICENSED
PROFESSIONAL ENGINEER

NK\ego
Copies Submitted: (2)
Enclosures: Excavation Support Earth Pressure – Figures 1.1 and 1.2
Stability of Bottom for Braced Cut – Figure 2
Geotechnical Design Parameter Summary: Open-cut Excavation – Table 1
PC38\GEOTECHNICAL\40209501-TS.DOC

Job No. 1140209501

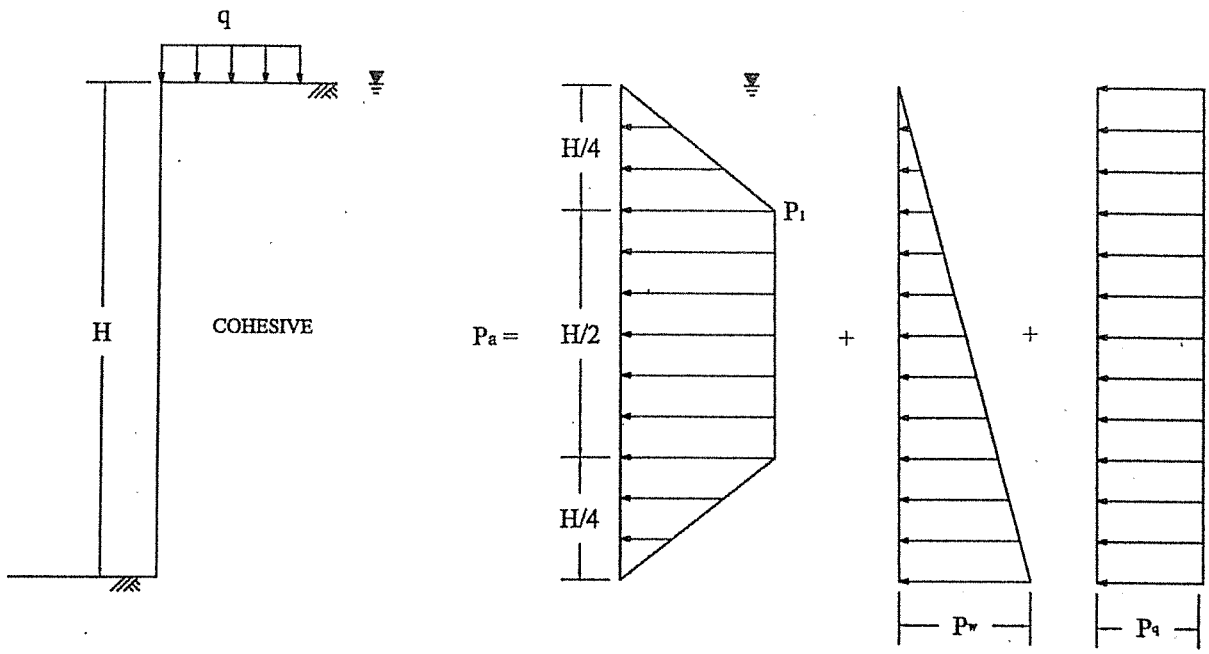

TYPICAL SOIL PARAMETERS

BRACED WALL

See Table 1 for typical values of soil parameters

For $\gamma H/c \leq 4$

$P_1 = 0.3\ \gamma_c' H$
$P_w = \gamma_w H = 62.4\ H$
$P_q = 0.5\ q$

Where:

γ_c' = Submerged unit weight of cohesive soil, pcf;
γ_w = Unit weight of water, pcf;
q = Surcharge load at surface, psf;
P_a = Lateral pressure, psf;
P_1 = Active earth pressure, psf;
P_q = Horizontal pressure due to surcharge, psf;
P_w = Hydrostatic pressure due to groundwater, psf;
H = Depth of braced excavation, feet
c = Shear strength of cohesion soil, psf;

EXCAVATION SUPPORT EARTH PRESSURE

SUBMERGED COHESIVE SOIL

Job No. 1140209501

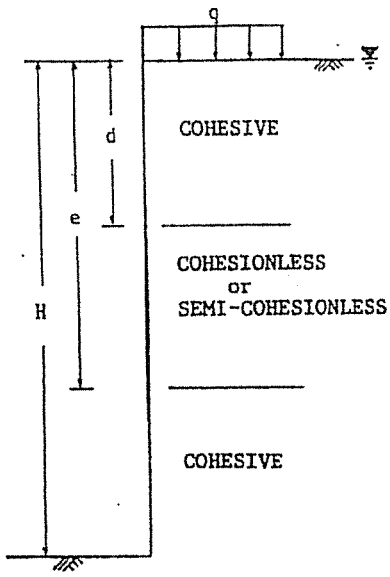

TYPICAL SOIL PARAMETERS

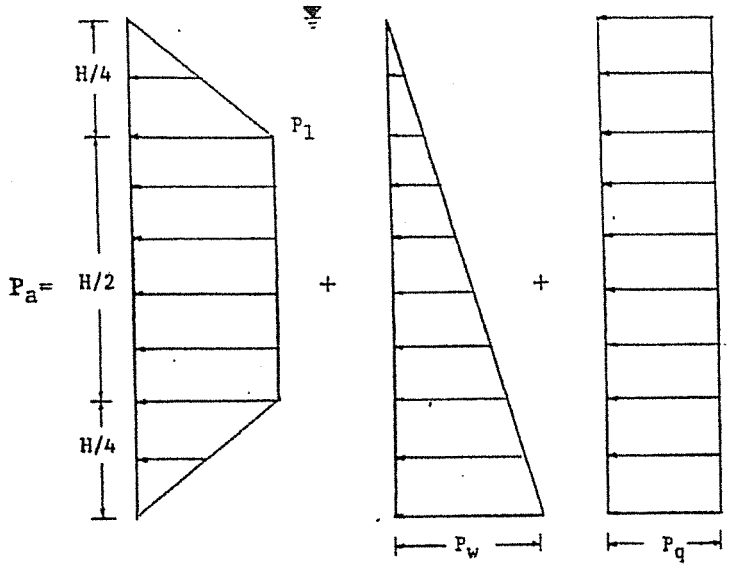

BRACED WALL

See Table 1 for typical values of soil parameters

$P_1 = 0.3\ \gamma'_{avg}\ H$

$P_w = \gamma_w\ H = 62.4\ H$

$P_q = 0.5q$

$$\gamma'_{avg} = \frac{\gamma_c'\ d + \gamma_s'\ (e-d) + \gamma_c'\ (H-e)}{H}$$

$\gamma_w = 62.4$ pcf

Where:

- γ_c' = Submerged unit weight of cohesive soil, pcf ;
- γ_s' = Submerged unit weight of cohesionless or semi-cohesionless soil, pcf ;
- γ_w = Unit weight of water, pcf;
- γ'_{avg} = Average submerged unit weight of soil, pcf ;
- q = Surcharge load at surface, psf;
- P_a = Lateral pressure, psf;
- P_1 = Active earth pressure, psf;
- P_q = Horizontal pressure due to surcharge, psf;
- P_w = Hydrostatic pressure due to groundwater, psf;
- H = Depth of braced excavation, feet

EXCAVATION SUPPORT EARTH PRESSURE

SUBMERGED COHESIVE SOIL INTERBEDDED WITH COHESIONLESS OR SEMI-COHESIONLESS SOIL

Job No. 1140209501

CUT IN COHESIVE SOIL,
DEPTH OF COHESIVE SOIL UNLIMITED ($T > 0.7\ B_d$)
L = LENGTH OF CUT

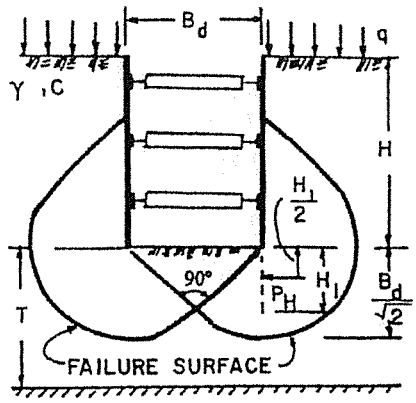

If sheeting terminates at base of cut:

$$\text{Safety factor, } F_S = \frac{N_C C}{\gamma H + q}$$

N_C = Bearing capacity factor, which depends on dimensions of the excavation : B_d, L and H (use N_C from graph below)

C = Undrained shear strength of clay in failure zone beneath and surrounding base of cut

γ = Wet unit weight of soil (see Table 1)

q = Surface surcharge (assumed q = 500 psf)

If safety factor is less than 1.5, sheeting or soldier piles must be carried below the base of cut to insure stability - (see note)

H_1 = Buried length $= \frac{B_d}{2} \geq 5$ feet

Note : If soldier piles are used, the center to center spacing should not exceed 3 times the width or diameter of soldier pile .

Force on buried length, P_H:

If $H_1 > \frac{2}{3}\frac{B_d}{\sqrt{2}}$, $P_H = 0.7\ (\gamma\ HB_d - 1.4CH - \pi CB_d)$ in lbs/ linear foot

If $H_1 < \frac{2}{3}\frac{B_d}{\sqrt{2}}$, $P_H = 1.5H_1\ (\gamma\ H - \frac{1.4CH}{B_d} - \pi C)$ in lbs/ linear foot

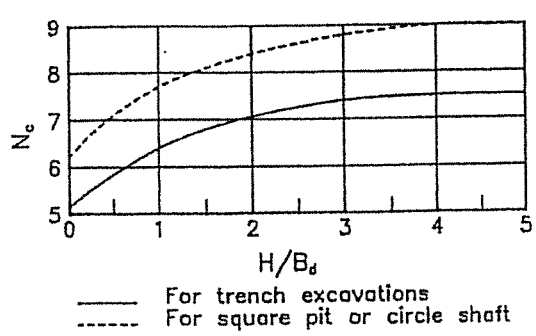

STABILITY OF BOTTOM
FOR
BRACED CUT

FIGURE 2

TABLE 1

GEOTECHNICAL DESIGN PARAMETER SUMMARY
OPEN-CUT EXCAVATION

Boring Nos.	Stratigraphic Unit	Range of Depths, ft	Wet Unit Weight, γ, pcf	Submerged Unit Weight, γ', pcf	Undrained Cohesion, psf	Internal Friction Angle, φ, degree
B-1	Fill	0-6	124	62	600	--
	Cohesive	6-10	129	64	1,500	--
		10-14	130	65	1,400	--
		14-20	132	66	1,000	--
		20-30	132	66	3,000	--
		30-48.5	128	64	1,600	--
	Cohesionless	48.5-50	105	42	--	28
B-7	Fill	0-8	125	63	500	--
	Cohesive	8-15	125	63	1400	--
	Cohesionless	15-18.5	98	44	--	25
	Cohesive	18.5-35	132	66	1000	--
		35-50	130	65	1500	--
B-8	Fill	0-8	132	66	1000	--
	Cohesive	8-16	125	63	1000	--
		16-22	130	65	1000	--
		22-38	132	66	2800	--
		38-50	126	63	1000	--
B-9	Fill	0-6	127	64	1300	--
	Cohesionless	6-8	102	51	--	25
	Cohesive	8-15	126	63	1100	--

Note: 1) Fill Soils consists of lean clay, sandy lean clay and fat clay with sand
2) Cohesive soils include Sandy Lean Clay, Fat Clay with sand and Sandy Fat Clay.
3) Cohesionless soils include Silt with Sand and Sandy Silt.

City of Houston
Pay or Play Program Requirements

I. Pay or Play Program Overview

A. Purpose

The Pay or Play Program was established with Ordinance 2007-534 on July 1, 2007 and is governed by Executive Order 1-7. The Pay or Play Program (POP Program) creates a more level playing field and enhances fairness in the bid process between competing contractors that choose to offer health benefits to their workforce and those who do not. The program also recognizes and accounts for the fact that there are cost associated with health care of the uninsured citizens of the Houston and Harris County area.

B. Program Elements

1. <u>Covered contracts</u>:

I.) Advertised after July 1, 2007 or which is executed on or after the effective date of this Executive Order.
II.) Contracts valued at or above $100,000.00 (contract) and $200,000.00 (sub-contract) including contingencies, amendments, supplemental terms and/or change orders.
III.) Professional Service, Construction, and Service type contracts.

2. <u>Contracts not covered</u>:

I.) Any contract in which the primary purpose is procurement of property, goods, supplies, and or equipment.
II.) An inter-governmental contract, inter-governmental agreement or purchasing cooperative.

3. <u>Covered employees</u>: This program applies to employees of a covered contractor or subcontractor, including contract labor, who are over age 18, work at least 30 hours per week <u>and</u> work any amount of time under a covered city contract or subcontract.

4. <u>Pay or Play Option</u>:

I.) "Pays" by contributing $1.00 per covered employee per regular hour for work performed under the contract with the City; or
II.) "Plays" by providing health benefits to covered employees. Health benefits must meet or exceed the following standards:

- The **employer will contribute no less than $150 per covered employee per month** toward the total premium cost.
- The **employee contribution, if any amount, will be no greater than 50% of the monthly premium cost and no more than $150 per month.**

Note: (1)A contractor is deemed to have complied with section 5.4 of E.O. 1-7 with respect to a covered employee who is not provided health benefits if the employee refuses the benefits and the employee's contribution to the premium is no more than $40 per month. (2) If applicable the contractor has the option to both Pay and Play.

5. **Exemptions/Waivers:** The City of Houston will award a contract to a contractor that neither Pays nor Plays only if the contractor has received an approved waiver (Form POP-4 requested by City departments only).

6. **Administration**: Contractor performance in meeting Pay or Play program requirements will be managed by the contracting department. The Office of Business Opportunity (OBO) has administrative oversight of the program, including audit responsibilities (department compliance). Questions about the program should be referred to the Department POP Liaison an updated contact list is available on http://www.houstontx.gov/obo/popforms.html or call Gracie Orr with the Office of Business Opportunity at 832-393-0633.

II. Documentation and Reporting Requirements

A. Document that must be signed and returned to administering department with the bid/proposal.

1.) City of Houston Pay or Play Program Acknowledgment Form (Form POP-1) acknowledges bidder/proposers' knowledge of the program and its requirements, and the intention to comply.

B. Documents that must be signed and returned to administering department within a period designated by the department's Contract Administrator, upon notification of low bidder or successful proposer status:

1.) Certification of Compliance with Pay or Play Program (Form POP-2)

Note - Contractors that opt to "play" must provide proof of coverage, including document from insurance provider, and names of covered employees.

2.) List of Subcontractors (Form POP-3)

Note- Review the affidavit statement at the bottom of this form for further important POP Compliance information.

C. Contractors reporting requirements:

1.) Contractors that opt to Pay
Provide monthly reports to administering department, detailing names of employees, hours worked, exemptions (if any) and amount owed. (Form POP-5)

2.) Contractors that opt to Play
Provide periodic reports to the contract administrator showing proof of coverage (insurance premium invoice or insurance card) reporting schedule will be determined by administering department based on length of contract. (Form POP-7)

3.) Employee Waiver Request
Contractor may request POP program waiver by submitting the request on POP-8 if the employee is less than 18 years old, employee has other health coverage such as through spouse or parents, or Medicare/Medicaid.

Note proof of coverage must be provided in the form of a copy of the employee's insurance card. (Remove social security numbers if applicable)

4.) Contractors shall submit an initial report with the second invoice to the department. Payments based on monthly reports are due to the contracting department with submission of the following month's invoice. Payments may be made out to the City of Houston preferably via cashier check or business check.

III. Compliance and Enforcement

The Office of Business Opportunity will audit program compliance. Contractors willfully violating or misrepresenting POP program compliance will be subject to corrective and/or punitive action, including but not limited to the assessment of fines and penalties and/or debarment. The Pay or Play Program Requirements Form and all other POP Forms are available for downloading from the City of Houston's Website at http://www.houstontx.gov/obo/popforms.html

Document 00931

REQUEST FOR INFORMATION

1. PROJECT No.: S-000056-0070-4
2. RFI No.: _____
3. PROJECT NAME: Clearwell Condition Assessment and Replacement of Select Valves and Actuators at the EWPP
4. CONTRACTOR: [Contractor Name]
5. CONTRACT No.: _____
6. SPECIFICATION Nos.: _____
7. DRAWING Nos.: _____
8. RESPONSE CODE: [_] CRITICAL [_] ROUTINE 9.DATE RESPONSE REQUIRED: _____
10. INFORMATION REQUIRED:

11. _____ _____
CONTRACTOR (Signature) TITLE DATE

12. RESPONSE:

13. _____ _____
PROJECT MANAGER (Signature) DATE

14. If Contractor believes the response given in Item 12 requires an adjustment in Contract Price or Contract Time, Contractor shall submit a timely proposal so as not to delay Contractor's Work in accordance with General Conditions, Article 7 - Changes in the Work.

END OF DOCUMENT

SECTION 01110

SUMMARY OF WORK

PART 1 GENERAL

1.01 SECTION INCLUDES

A. Summary of the Work including Work Covered By Contract Documents, Cash Allowances, City-Furnished Products, Contractor Use Of Premises, Warranty, Conditions For Substantial Completion, General Construction Notes, and Confidentiality of Contract Documents.

B. Work related to this Section is found in:

1. Section 01325 – Construction Schedule

1.02 REFERENCE CODES

A. International Building Code (IBC), 2006, with all applicable Houston amendments.

1.03 WORK COVERED BY CONTRACT DOCUMENTS

A. Work in these contract documents: the project includes construction of passive overflow system, multi-faceted structural reinforcement of EWPP No. 2 clearwell, Sodium bisulfite system, expansion of existing onsite storm water detention area, automated control of existing EWPP No. 2 filter effluent discharge valve actuators, and clearwell Cleaning to remove buildup of scale and media in EWPP no. 2 . The full and complete project scope is described by the Contract Documents consisting of all technical specifications, drawings, and other documents included as part of this bid package. The exclusion of any scope from this summary does not relieve the Contractor from fulfilling his obligations under the Contract. The price for these items should be included in Section 00410, Part B, Paragraph A - Stipulated Price". The cost of Mobilization, traffic control and trench safety are included in Section 00410, Part B, Paragraph B - Base Unit Price. The cost of Extra Unit Price and Cash Allowance are included in Section 00410, Part C and D.

B. Work included in the Stipulated Price for this contract, to be provided in Section 00410, Part B, Paragraph A, includes:
   1. All work not explicitly included in the Base Unit Price Bid Items, the Extra Unit Price Bid Items and the Cash Allowances.

C. Project Component No. 1: Construction of passive overflow system, consisting of new concrete structure and box culvert in vicinity of existing EWPP No. 2 filter building, to accomplish diversion of plant flows from treatment process units to designated onsite detention area during power outage-induced overflow event.

D. Project Component No. 2: Multi-faceted structural reinforcement of EWPP No. 2 clearwell and filter effluent channel/pipe gallery to withstand loading imparted by proposed passive overflow system.

E. Project Component No. 3: Sodium bisulfite system to accomplish chloramine control of overflow discharge, including prefabricated building, concrete slab, packaged chemical feed unit, dedicated onsite generator, and all other associated electrical, instrumentation, and controls components. Proposed sodium bisulfite building location is depicted on Sheet G05, and its structural (foundation), mechanical, and electrical components detailed on Sheets SM16, M01, and E14, respectively. Additionally, requirements for the building enclosure are outlined in technical specification Section 13120, Pre-Cast Segmental Concrete Building.

F. Project Component No. 4: Expansion of existing onsite storm water detention area, including all associated excavation, offsite material hauling, grading, concrete, slope stabilization, and seeding.

G. Project Component No. 5: Automated control of existing EWPP No. 2 filter effluent discharge valve actuators to accomplish programmed shutoff via onsite generator connection, during power outage-induced overflow event.

H. Project Component No. 6: Cleaning to remove buildup of scale and media in EWPP No. 2 clearwell.

I. Contractor shall furnish all labor, supervision, tools, and material, as described in the specifications and as shown on the drawings to perform the required Work. Provide all appurtenant equipment, connections, and special items necessary to accomplish the purposes shown or specified, even if such appurtenant equipment, connections, and special items are not specifically specified or shown on the drawings. Install all items provided in accordance with the specifications, manufacturer's recommendations, and best practices of the trades involved.

J. Contractor shall assume full responsibility for the means, methods, techniques, sequences, and procedures of construction and safety precautions and programs incidental thereto, and for the functional operation of the systems specified in this Contract. Provide, connect, test, and supervise the installation of the systems specified. The installation and testing of any device, subsystem, or system must be performed under the direct supervision of persons qualified by training and experience to capably perform the Work in a satisfactory manner. Contractor shall provide formal written documentation certifying compliance with all manufacturer recommended installation and testing procedures.

K. Contractor shall perform Work in accordance with applicable statutes, ordinances, codes, and regulations of governmental authorities having jurisdiction.

L. Contractor shall be responsible for the development, implementation, and maintenance of a detailed, project-specific Storm Water Pollution Prevention Plan (SWPPP), which complies with all applicable stipulations and requirements of the Texas Commission on Environmental Quality (TCEQ) administered Texas Pollutant Discharge Elimination System (TPDES) general permit (TXR150000). Contractor shall provide copy of submitted SWPPP, and all supplemental documentation, to Owner and Engineer, prior to the commencement of construction activities.

M. Contractor shall be fully responsible and obligated to maintain procedures for safety of all Work, personnel, and equipment involved in the project. Information presented herein does not extend to, or include, designs or systems pertaining to the safety of the Contractor or its employees, agents, or representatives, in the performance of the Work. The seal of the registered engineer(s) included on the drawings and technical specifications does not extend to any such safety systems that may now, or hereafter, be incorporated into the Work. Contractor shall prepare or obtain appropriate safety systems, including trench safety systems, designed and sealed by a professional engineer licensed in the state where the Work is to be performed.

N. Materials that are specified by reference to Federal Specifications; ASTM, ASME, NEMA, ANSI or AWWA specifications; Federal Standards; or other standard specifications must comply with latest editions, revisions, amendments or supplements in effect on the date that bids are received. Requirements in reference specifications and standards represent a minimum for all equipment, material, and Work. In instances where capacities, size, or other features of equipment, devices, or materials exceed these minimums, meet listed or shown capacities.

O. The location of existing utilities has been shown based on available survey data, record drawings, and Owner input. Contractor shall field-locate all existing utilities and points of crossing prior to initiating construction activities, and shall notify Owner and Engineer immediately upon discovery of a potential conflict and/or variation from the drawings. Contractor shall be responsible for the protection of existing utilities, structures and equipment, and shall bear all costs associated with their relocation, replacement, and/or repair if damaged during the course of construction.

P. Work included in the Base Unit Price Items included in the Base Unit Price Table, prices to be provided in Section 00410, Part B, Paragraph B, shall consist of the following:
   1. Base Unit Price Item No. 1: Mobilization by the Contractor to initiate project start-up, as specified in Section 01502 and Supplementary Section 01502S. Includes construction of temporary field offices and facilities as specified in Section 1520.
   2. Base Unit Price Item No. 2: Traffic Control
   3. Base Unit Price Item No. 3: Provide and install a trench safety system in accordance with City of Houston, and OSHA requirements.

Q. Work included in the Extra Unit Items included in the Extra Unit Price Table, prices to be provided in Section 00410, Part B, Paragraph C, shall consist of the following items:
   4. Remove Remnants of Concrete Foundations Not Identified on Drawings

5. Extra Solids Removal from Clearwell Cleaning Operations, Including Transportation and Disposal
6. Extra Waste Material Removal and Disposal
7. Extra Roadway Demolition
8. Extra Hand Excavation and Backfill
9. Extra Small Machine Excavation and Backfill using 12"-24" Bucket Tractor/Backhoe or similar
10. Extra Large Machine Excavation and Backfill using D6-D8 Dozer or 11-22 CY Scraper or similar
11. Extra Select Backfill Material, Complete in Place
12. Extra Cement Stabilized Sand, Complete in Place
13. Extra Depth for 18" Diameter Drilled Concrete Piers w/48" Bell, Complete in Place
14. Extra Ductile Iron Pipe and Fittings, 4" Diameter, Buried, Complete in Place
15. Extra Ductile Iron Pipe and Fittings, 8" Diameter, Buried, Complete in Place
16. Extra Ductile Iron Pipe and Fittings, 16" Diameter, Buried, Complete in Place
17. Extra Ductile Iron Pipe, 36" Diameter, Above Grade, Including all Fittings, Bends and Supports, Complete in Place
18. Extra Polyvinyl Chloride Pipe and Fittings, 1" Diameter, Above Grade, Including all Fittings, Bends and Supports, Complete in Place
19. Extra Polyvinyl Chloride Pipe and Fittings, 4" Diameter, Above Grade, Including all Fittings, Bends and Supports, Complete in Place
20. Extra Polyvinyl Chloride Pipe and Fittings, 6" Diameter, Above Grade, Including all Fittings, Bends and Supports, Complete in Place
21. Extra Reinforced Concrete Pipe, 18" Diameter, Buried, Complete in Place
22. Extra Reinforced Concrete Pipe, 24" Diameter, Buried, Complete in Place
23. Extra Reinforced Concrete Pipe, 36" Diameter, Buried, Complete in Place
24. Extra Concrete Box Sewer, 10 FT x 3 FT, Complete in Place
25. Extra Concrete Box Sewer, 9 FT x 4 FT, Complete in Place
26. Extra Concrete Paving, Complete in Place
27. Extra Curb and Gutter - CIP Concrete, Complete in Place
28. Extra Concrete with Forms, Complete in Place
29. Extra Concrete w/o Forms, Complete in Place
30. Extra Concrete Repair, Complete in Place
31. Extra Concrete Grout, 1" Thick, Complete in Place
32. Extra GFRP Reinforcement, Single Layer, Complete in Place
33. Extra Epoxy Injection System, Complete in Place
34. Extra Hydrophilic Foam Polyurethane Resin Injection System, Complete in Place
35. Extra Structural Stainless Steel, Complete in Place
36. Extra Structural Aluminum, Complete in Place
37. Extra Aluminum Handrail, Complete in Place
38. Extra Aluminum Stair Treads, Complete in Place
39. Extra Aluminum Grating, Complete in Place
40. Extra High Solids Epoxy Coating, Complete in Place
41. 4 Strand Fiber Optic Cable Installed in Conduit, Complete in Place
42. 6 Strand Fiber Optic Cable Installed in Conduit, Complete in Place
43. 12 Strand Fiber Optic Cable Installed in Conduit, Complete in Place
44. 36 Strand Fiber Optic Cable Installed in Conduit, Complete in Place
45. Extra 1" Rigid Aluminum Conduit Installed Above Ground, Complete in Place

46. Extra 1 1/2" Rigid Aluminum Conduit Installed Above Ground, Complete in Place
47. Extra 2" Rigid Aluminum Conduit Installed Above Ground, Complete in Place
48. Extra Copper No. 14 AWG Conductor with XHHW-2 Insulation, Complete in Place
49. Extra Copper No. 12 AWG Conductor with XHHW-2 Insulation, Complete in Place
50. Extra Copper No. 10 AWG Conductor with XHHW-2 Insulation, Complete in Place
51. Extra Copper No. 6 AWG Conductor with XHHW-2 Insulation, Complete in Place
52. Extra Copper No. 4 AWG Conductor with XHHW-2 Insulation, Complete in Place
53. Extra Copper No. 1 AWG Conductor with XHHW-2 Insulation, Complete in Place
54. Extra Copper No. 1/0 AWG Conductor with XHHW-2 Insulation, Complete in Place
55. Extra Copper No. 3/0 AWG Conductor with XHHW-2 Insulation, Complete in Place
56. Extra 2/C or 3/C, #16 AWG Twisted Shielded Instrument Cable, Complete in Place
57. Extra 1” PVC Schedule 40 Conduit Installed in Underground Duct Bank, Complete in Place
58. Extra 1 1/2” PVC Schedule 40 Conduit Installed in Underground Duct Bank, Complete in Place
59. Extra 2” PVC Schedule 40 Conduit Installed in Underground Duct Bank, Complete in Place
60. Extra 4” PVC Schedule 40 Conduit Installed in Underground Duct Bank, Complete in Place
61. 61 Extra Duct Bank Trenching, Rebar, Concrete Encasement and Backfill for Duct Banks with Top of Duct Maximum 48” Below Grade, Complete in Place
62. Extra 3’ X 3’ Precast Concrete Pull Box Installed as Detailed, Complete in Place
63. Extra 4’ X 4’ Precast Concrete Pull Box Installed as Detailed, Complete in Place
64. Additional Temporary Bypass Provisions, Complete in Place
65. Additional Dewatering, Complete in Place
66. Additional Demolition
67. Additional Shoring and Protection, Complete in Place
68. Additional Utility Relocations, Complete in Place

1.04 CASH ALLOWANCES

A. Include the following specific Cash Allowances in Contract Price under provision of General Conditions Paragraph 3.11:
   69. City of Galena Park Permit

1.05 ALTERNATES (NOT USED)

1.06 CITY-FURNISHED PRODUCTS (NOT USED)

1.07 WORK CONSTRAINTS

A. Contractor shall submit a detailed phasing plan for review by the Owner and Engineer prior to the start of construction. The phasing plan shall address the Contractor's proposed method and timing of the major construction activities to be undertaken, such that the Owner and Engineer can readily ascertain the Contractor's intended means and methods, execution sequence, and plan feasibility. Contractor's plan shall also highlight all tasks requiring Owner action or input, including necessary existing utility relocates and plant shut down periods. Contractor shall coordinate the proposed phasing plan with the overall construction schedule. Contractor shall endeavor to minimize impacts to plant operation, including any full or partial service interruption durations, to the maximum extent possible. Contractor shall not commence construction activities prior to construction sequencing plan review by the Owner and Engineer.

B. The following major assumptions and/or constraints are provided to guide Contractor's phasing plan development:
   1. Clearwell cleaning and FRP reinforcement to be completed in the "dry."
   2. Clearwell access to be obtained through existing roof vent located atop the transfer pump station and/or through existing metal plated slab openings located in the Clearwell Approach Channel area.
   3. One access stairwell (Clearwell Approach Channel or Pipe Gallery location) must remain in place and accessible at all times during the course of construction.
   4. Opening associated with existing Pipe Gallery window designated for removal and replacement may be utilized as construction access point.
   5. Continual access to Maintenance Building east side roll-up doors must maintained at all times during the course of construction. Should temporary access restrictions be necessitated to facilitate completion of the work, Contractor shall notify Owner in writing at least seven calendar days prior to commencing work.
   6. Existing 24-inch and 36-inch filter backwash lines designated for relocation in vicinity of EWPP No. 2 are interconnected with the backwash tank serving EWPP No. 1. Temporary suspension of backwash operations at EWPP No. 1 to accomplish installation of line isolation provisions shall be limited to a maximum duration of 24 consecutive hours. Contractor shall notify Owner in writing at least seven calendar days prior to commencing work. Owner operations personnel shall be responsible for accomplishing all plant related shut-down activities.
   7. Temporary EWPP No. 2 decommissioning durations shall be limited to succinct periods, as noted herein. In addition to the work directly associated with the temporary shutdown, all required existing utility relocations shall also be completed during these periods. Contractor shall notify Owner in writing at least seven calendar days prior to commencing work. Owner operations personnel shall be responsible for accomplishing all plant-related shut-down activities.
      a. Clearwell and filter effluent flume structural improvements: 12/30/16 to 1/5/17.
      b. Overflow structure construction (pipe installation): 8/4/17 to 9/14/17.

C. Coordination of the Work: Refer to Section 01312 – Coordination and Meetings.

1.08 UNDERGROUND UTILITY LINES

A. Underground utility line locations shown on the drawings are based on available Owner-provided record drawings, and a site survey of observable features. It is important to note that the available record drawings may not be accurate. Moreover, the site survey of observable features may not indicate all existing underground utility lines.

B. In some cases electrical, SCADA, security, and control underground conduits and duct banks are identified on available record drawings; however, cabling within these conduits and duct banks, as well as conduit/duct sizes are not known. While the best available information related to cabling and conduit/duct sizes has been utilized in the preparation of the Drawings depicting the current work, this information may require adjustment through the use of extra unit prices once actual information is uncovered during excavation.

C. After mobilization, and prior to material procurement and start of construction, Contractor shall perform exploratory excavations to locate existing underground utilities in the vicinity of the proposed work. Contractor shall notify Owner and Engineer immediately should it be determined that existing underground utility lines conflict with proposed construction. Contractor shall obtain Owner's approval prior to starting excavation. Contractor shall proactively maintain “As-Built” drawings throughout the course of project construction to identify changes, additions, and deletions of any underground utility lines discovered prior to, and during completion of the work. Exploratory excavations and documentation of underground utility lines shall be included in the lump sum base bid amount.

1.09 CONTRACTOR USE OF PREMISES

A. Comply with procedures for access to the site and Contractor's use of site areas as specified in Section 01145 – Use of Premises.

B. Construction Operations: Limited to areas shown or described in the Contract Documents and/or areas of the site formally authorized in writing by Owner for Contractor's use.

C. Utility Outages and Shutdown: Provide a minimum of seven calendar days written notice to the City and private utility companies (when applicable), excluding weekends and holidays, prior to initiating portions of the Work involving any anticipated and/or required utility or treatment process shutdowns, outages, and/or by-pass operations. Coordinate all work as required.

D. Owner shall have access to the project area during the entire duration of construction.

E. Cooperate with the Owner to minimize conflict, and to facilitate the Owner’s operations. Contractor shall coordinate all construction-related activities with Owner’s Inspector, and shall schedule his operations to accommodate this requirement.

F. If Owner occupies any or all parts of the premises, this action shall not signify Substantial Completion or any limits to the Contractor's liability or contractual responsibility of premises.

G. The Work associated with this contract shall occur in an operating water treatment plant. Contractor shall maintain continual access to all treatment process components located within project vicinity for entire duration of construction. In addition, Contractor shall sequence work so as to minimize interruptions to treatment operations. Contractor's provision of temporary and/or permanent utility relocations may be required, should it be determined that existing utilities must be temporarily decommissioned and/or relocated to facilitate construction. Maintaining continual access and service during the completion of the Work shall require significant communication between the Contractor and Owner. Contractor shall cooperate with the Owner by any and all means necessary.

H. Contractor shall develop an emergency contingency plan to guide his operations and construction activities in the event of an extreme weather condition, including hurricanes, tropical storms, flooding, etc. Contractor shall comply with all Owner directives related to construction activities during any and all of the aforementioned events, as applicable.

1.10 STREET CUT ORDINANCE (NOT USED)

1.11 WARRANTY

A. Comply with warranty requirements in accordance with Document 00700 – General Conditions.

1.12 ADDITIONAL CONDITIONS FOR SUBSTANTIAL COMPLETION

A. In addition to requirements outlined in Document 00700 – General Conditions, the following conditions must be met:
   1. Completion and acceptance of all testing.
   2. Delivery of draft O&M manuals to Project Manager.
   3. Completion of operator training using draft O&M manuals.
   4. Installation of all safety-related systems and equipment, completion of all safety-related work, and acceptance and approval of all by manufacturer's representative.
   5. Submission of report certifying completion of all pay items.
   6. Installation, acceptance, and approval of all SCADA and security equipment by manufacturer's representative (if applicable).
   7. Completion of Texas Department of Licensing and Regulation Post Construction Inspection of pedestrian elements for Texas Accessibility Standards (if applicable).
   8. Successful completion of all System Performance Testing requirements, as outlined herein.

B. No item included in the above-referenced list may be included on Contractor's punch list.

1.13 SYSTEM PERFORMANCE TESTING

A. In addition to testing of individual pieces of equipment, materials, and other project-related components, as indicated in the individual sections of these technical specifications, Contractor shall be responsible for performing comprehensive testing of the proposed EWPP No. 2 overflow system in its entirety. Specifically, testing shall consist of two components: Overflow System Functionality Testing and 2) Structural Containment Testing. The tests shall be performed sequentially, with the Overflow System Functionality Testing occurring first, followed by the Structural Containment Testing.

B. Overflow System Functionality Testing:
   1. Test shall entail controlled shutoff (by Owner) of four EWPP No. 2 clearwell transfer pumps; thereby allowing for sustained flow of 80 MGD to pass through overflow system.
   2. Test success shall be measured based upon achieving the following conditions in two consecutive iterations:
      a. Automated startup of the stand-by generator. Total elapsed time from shutoff of transfer pumps to generator reaching design output shall be as specified in Section 16210.
      b. Automated pumping of sodium bisulfite to the overflow structure at design flow rate as specified in Section 11420. Total elapsed time from shutoff of transfer pumps to uniform dispersion of sodium bisulfite within overflow structure shall be five minutes or time at which water first passes through flap gates, whichever is less.
      c. Automated closure of eight filter effluent valves. Total elapsed time from shutoff of transfer pumps to full closure of valves shall be 20 minutes or time at which water first passes through flap gates, whichever is less.
      d. Automated shutoff of the sodium bisulfite pumps after the eight filter effluent valves have fully closed, and no further water is passing the flap gates.
   3. Lack of compliance on any of the aforementioned items will constitute a failure of Overflow System Functionality Testing.
   4. Duration from initial transfer pump shutoff to transfer pump restart and fully restored transfer pump station operational status shall not exceed 25 minutes.
   5. Contractor shall allow for sufficient time between successive Overflow System Functionality Tests so as to facilitate complete drainage of overflow system discharge from proposed detention basin.

C. Structural Containment Testing:
   1. Testing to be performed only after successful completion of Overflow System Functionality Testing.
   2. Test shall entail controlled shutoff (by Owner) of four EWPP No. 2 clearwell transfer pumps; thereby allowing for static containment of water within Clearwell, Clearwell Approach Channel, Filter Effluent Channel, and Overflow Structure up to the location of the flap gates (EL 15.80) for a total duration of four hours.
   3. Test success shall be measured based upon achieving the following conditions:

a. No visible evidence of water leakage in the form of cracks, at joints, or around penetrations at any concrete slabs or walls. The following locations shall be thoroughly investigated over the duration testing:
   1) Pipe Gallery floor slab
   2) Pipe Gallery Overflow Control Structure walls and roof slab
   3) All Filter Control Building areas located above the Clearwell
   4) Clearwell transfer pump deck slab
   5) Overflow Structure walls
b. All watertight hatches shall show no evidence of leakage or damp spots around perimeter of hatches.

4. If any evidence of leakage is observed, test shall be suspended and the transfer pumps immediately restarted. Leakage shall be repaired with an epoxy injection system or hydrophobic polyurethane injection system, as specified in Sections 03931 and 03933, respectively, as approved in writing by the Engineer.

D. Contractor shall notify Owner and Engineer in writing a minimum of five working days in advance of any planned testing date(s). Contractor shall not commence testing without written confirmation and approval of proposed testing date by Owner. Moreover, Contractor shall not initiate any testing-related activities without direct onsite involvement of Owner operations and inspection staff.

E. In the event of non-conformance of any component during system testing, the test shall be considered not successful. Contractor shall be responsible for repeating testing, in coordination with the Owner, until all the components operate successfully together as a fully functional system. At Owner's discretion, Contractor may be held responsible for all costs associated with multiple repeat testing attempts.

PART 2 PRODUCTS

Not Used.

PART 3 EXECUTION

Not Used.

END OF SECTION

Section 01145

USE OF PREMISES

1.01 SECTION INCLUDES

A. General use of the site including properties inside and outside of rights-of-way, work affecting road, ramps, streets and driveways and notification to adjacent occupants.

1.02 RIGHTS-OF-WAY

A. Confine access, and operations and storage areas to rights-of-way provided by the City as stipulated in Document 00700 - General Conditions; trespassing on abutting lands or other lands in the area is not allowed.

B. Make arrangements, at no cost to the City, for temporary use of private properties. Contractor and Surety shall indemnify and hold harmless the City against claims or demands arising from such use of properties outside of rights-of-way. Submit a copy of agreements between private property owners and Contractor prior to use of the area. Agreements between private property owners and Contractor shall be notarized or bear the signatures of two witnesses.

C. Obtain written permission from City of Houston Parks and Recreation Department for storage of materials on esplanades and other areas within rights-of-way under that department's jurisdiction. Submit copies of written permission prior to use of the area.

D. Restrict total length of distributed materials along the route of construction to 1,000 linear feet unless otherwise approved in writing by City Engineer.

1.03 PROPERTIES OUTSIDE OF RIGHTS-OF-WAY

A. Do not alter the condition of properties adjacent to and along rights-of-way.

B. Do not use ways, means, methods, techniques, sequences, or procedures that result in damage to properties or improvements.

C. Restore damaged properties outside of rights-of-ways at no cost to the city

1.04 USE OF SITE

A. Obtain approvals from governing authorities prior to impeding or closing public roads and streets. Do not close more than two consecutive intersections at one time.

B. Notify Project Manager and Public Works and Engineering Traffic Management Branch at least five working days prior to closing a street or street crossing. Obtain permits for street closures in advance.

C. Maintain 10-foot-wide minimum access lanes for emergency vehicles including access to fire hydrants.

D. Avoid obstructing drainage ditches or inlets. When obstruction is unavoidable due to requirements of the Work, provide grading and temporary drainage structures to maintain unimpeded flow.

E. Locate and protect private lawn sprinkler systems that may exist within the site. Repair or replace damaged systems to condition existing at start of the Work, or better. Test irrigation system prior to construction.

F. Conform to daily clean-up requirements of Article 3 of Document 00700 - General Conditions.

G. Beware of overhead power lines existing in area and in close proximity of the Project. When 10 feet of clearance between energized overhead power line and construction-related activity cannot be maintained, request Center Point Energy (CPE) de-energize or move conflicting overhead power line. Contact CPE representatives at (713) 207-2222. Schedule, coordinate and pay costs associated with de-energizing or moving conflicting overhead power lines. When there is no separate pay item for this effort, include these costs in various items of bid that make such work necessary.

1.05 NOTIFICATION TO ADJACENT OCCUPANTS

A. Notify individual occupants in areas to be effected by the Work of proposed construction and time schedule. Notify not less than 72 hours or more than two weeks prior to work performed within 200 feet of homes or businesses. Follow form and content of sample door hanger provided by Project Manager.

B. Include in notification nature of the Work, and names and telephone numbers of two company representatives for resident contact available on 24-hour call.

C. Submit proposed notification to Project Manager for approval. Consider ethnicity of the neighborhood where English is not the dominant language. Provide notice in an understandable language.

1.06 PUBLIC, TEMPORARY, AND CONSTRUCTION ROADS AND RAMPS

A. Construct and maintain temporary detours, ramps, and roads to provide for normal public traffic flow when it is necessary to close public roads or streets.

B. Provide mats or other means to prevent overloading or damage to existing roadways from tracked equipment, large tandem axle trucks or equipment that will damage the existing roadway surfaces.

C. Construct and maintain access roads and parking areas as specified in Section 01504 - Temporary Facilities and Controls.

1.07 EXCAVATION IN STREETS AND DRIVEWAYS

A. Avoid hindering or inconveniencing public travel on streets or intersecting alleys for more than two blocks at any one time, except by permission of City Engineer.

B. Obtain Traffic Management Branch and City Engineer's approval when nature of the Work requires closure of an entire street. Permits required for street closure are Contractor's responsibility. Avoid unnecessary inconvenience to abutting property owners.

C. Remove surplus materials and debris and open each block for public use, as work in that block is complete.

D. Acceptance of any portion of the Work will not be based on return of street to public use.

E. Avoid obstructing driveways or entrances to private property.

F. Provide temporary crossings or complete excavation and backfill in one continuous operation to minimize duration of obstruction when excavation is required across drives or entrances.

G. Provide barricades and signs in accordance with Section VI of the State of Texas Manual on Uniform Traffic Control Devices.

1.08 TRAFFIC CONTROL

A. Comply with traffic regulation as specified in Section 01555 - Traffic Control and Regulation.

1.09 SURFACE RESTORATION

A. Restore the site including landscaping to the condition existing before construction, or better.

B. Repair paved areas per the requirements of Section 02951 - Pavement Repair and restoration.

C. Repair damaged turf areas, level with bank run sand conforming to Section 02317 - Excavation and Backfill for Utilities, or topsoil conforming to Section 02911 - Topsoil, and re-sod in accordance with Section 02922 - Sodding. Water and level newly sodded areas with adjoining turf using appropriate steel wheel rollers for sodding. Do not use spot sodding or sprigging.

1.10 LIMITS OF CONSTRUCTION

A. Confine operations to lands within construction work limits shown on Drawings. Unless otherwise noted on Drawings adhere to the following:

1. Where utility alignment is within esplanade, and construction limits are shown on Drawings to extend to edge of esplanade, keep equipment, materials, stockpiles a minimum of five feet from back of curb.

2. Where construction limits shown on Drawings extend to property line, keep sidewalks free of equipment, materials, and stockpiles.

1.11 EQUIPMENT AND MATERIAL SALVAGE

A. Upon completion of the Work, carefully remove salvageable equipment and material. Deliver them to City of Houston as directed by Project Manager. Dispose of equipment offsite at no additional cost to the City when Project Manager deems equipment unfit for further use.

PART 2 P R O D U C T S - Not Used

PART 3 E X E C U T I O N - Not Used

END OF SECTION

Section 01255

CHANGE ORDER PROCEDURES

PART 1 G E N E R A L

1.01 SECTION INCLUDES

A. Procedures for processing Change Orders, including:

1. Assignment of a responsible individual for approval and communication of changes in the Work;
2. Documentation of change in Contract Price and Contract Time;
3. Change procedures, using proposals and Modifications;
4. Execution of Change Orders;
5. Correlation of Contractor submittals.

1.02 REFERENCES

A. Blue Book is defined as the Rental Rate Blue Book for Construction Equipment (a.k.a. Data Quest Blue Book).

B. Rental Rate is defined as the full-unadjusted base rental rate for the appropriate item of construction equipment.

1.03 RESPONSIBLE INDIVIDUAL

A. Provide a letter indicating the name and address of the individual authorized to execute Modifications, and who will be responsible for informing others in Contractor's employ and Subcontractors of changes to the Work. Provide this information at the pre-construction meeting.

1.04 DOCUMENTATION OF CHANGE IN CONTRACT PRICE AND CONTRACT TIME

A. Maintain detailed records of changes in the Work. Provide full information required for identification and evaluation of proposed changes, and substantiate costs of changes in the Work.

B. Document each proposal for change in Contract Price or Contract Time with sufficient data to allow evaluation of proposal.

C. Include the following minimum information on proposals:

1. Quantities of items in original Document 00410 – Bid Form with additions, reductions, deletions, and substitutions.

2. Quantities and cost of items in original Schedule of Values with additions, reductions, deletions and substitutions.

3. Provide Unit Prices for new items, with supporting information, for inclusion in Schedule of Unit Price Work.

4. Justification for changes in Contract Time.

5. Additional data upon request.

D. For changes in the Work performed on a time-and-material basis, provide the following additional information:

1. Quantities and description of Products.

2. Taxes, insurance and Bonds.

3. Overhead and profit as noted in Document 00700 - General Conditions.

4. Dates, times and by who work was performed.

5. Time records and certified copies of applicable payrolls.

6. Invoices and receipts for Products, rental equipment, and subcontracts, similarly documented.

E. For changes in the Work performed on a time-and-materials basis, rental equipment is paid as follows:

1. Actual invoice cost for duration of time required to complete extra work without markup for overhead and profit. When extra work comprises only a portion of a rental invoice where equipment would otherwise be on site, compute hourly equipment rate by dividing the actual monthly invoice by 176. One day equals eight hours and one week equals 40 hours.

2. Do not exceed estimated operating costs given in Blue Book for items of equipment. Overhead and profit will be allowed on the operating cost.

F. For changes in the Work performed on a time-and-materials basis using Contractor-owned equipment, use Blue Book rates as follows:

1. Contractor-owned equipment will be paid at the Blue Book Rental Rate for the duration of time required to complete extra work without markup for overhead and profit. Utilize lowest cost combination of hourly, daily, weekly or monthly rates. Use 150 percent of Rental Rate for double shifts, one extra shift per day, and 200 percent of Rental Rate for more than two shifts per day. Standby rates shall be 50 percent of the appropriate Rental Rate shown in Blue Book. No other rate adjustments apply.

2. Do not exceed estimated operating costs given in Blue Book. Overhead and profit will be allowed on operating costs. Operating costs will not be allowed for equipment on standby.

1.05 CHANGE PROCEDURES

A. Changes to Contract Price or Contract Time can only be made by issuance of Document 00941 - Change Order. Issuance of Document 00940 - Work Change Directive will be formalized into a Change Order. Changes will be in accordance with requirements of Document 00700 - General Conditions.

B. City Engineer will advise of Minor Changes in the Work as authorized by the Document 00700 - General Conditions by issuing Document 00942 – Minor Change.

C. Request clarification of Drawings, Specifications, Contract documents or other information by using Document 00931- Request for Information. Response by Project Manager to Requests for Information does not authorize Contractor to perform tasks outside scope of the Work. Changes must be authorized as described in this Section.

1.06 PROPOSALS AND CONTRACT MODIFICATIONS

A. Project Manager may issue Document 00932- Request for Proposal, which includes a detailed description of the proposed change with supplementary or revised Drawings and Specifications. Project Manager may also request a proposal in response to a Request for Information. Prepare and submit the proposal within seven days or as specified in request.

B. Submit requests for Contract changes to City Engineer describing proposed change and its full effect on the Work, with a statement describing reason for change and effect on Contract Price and Contract Time including full documentation.

C. Design Consultant may review Change Orders.

1.07 WORK CHANGE DIRECTIVE

A. City Engineer may issue a signed Work Change Directive instructing Contractor to proceed with a change in the Work. Work Change Directive will subsequently be incorporated into a Change Order.

B. Work Change Directives will describe changes in the Work and designate the method of determining change in Contract Price or Contract Time.

C. Proceed promptly to execute changes in the Work in accordance with the Work Change Directive.

1.08 STIPULATED PRICE CHANGE ORDER

A. A Stipulated Price Change Order will be based on an accepted proposal.

1.09 UNIT PRICE CHANGE ORDER

A. Where Unit Prices for affected items of the Work are included in Document 00410 – Bid Form, the Change Order will be based on Unit Prices, subject to Articles 7 and 9 of Document 00700 - General Conditions.

B. Where Unit Prices of the Work are not pre-determined in Document 00410-Bid Form, the Work Change Directive or accepted proposal will specify the Unit Prices to be used.

1.10 TIME-AND-MATERIAL CHANGE ORDER

A. Provide itemized account and supporting data after completion of change, within time limits indicated for claims in Document 00700 - General Conditions.

B. City Engineer will determine the change allowable in Contract Price and Contract Time as provided in Document 00700 - General Conditions.

C. Maintain detailed records for work done on time-and-material basis as specified in Paragraph 1.04 above.

D. Provide full information required for evaluation of changes and substantiate costs for changes in the Work.

1.11 EXECUTION OF CHANGE DOCUMENTATION

A. City Engineer will issue Change Orders, Work Change Directives, or Minor Change in the Work for signatures of Parties as described in Document 00700 - General Conditions.

1.12 CORRELATION OF CONTRACTOR SUBMITTALS

A. For Stipulated Price Contracts, promptly revise Schedule of Values and Application for Payment forms to record authorized Change Orders as separate line item.

B. For Unit Price Contracts, the next monthly estimate of the Work after acceptance of a Change Order will be revised to include new items not previously included with appropriate Unit Prices.

C. Promptly revise progress schedules to reflect change in Contract Time, and to adjust time for other items of work affected by the change, and resubmit for review.

D. Promptly enter changes to on-site and record copies of Drawings, Specifications or Contract documents as required in Section 01785 - Project Record Documents.

PART 2 P R O D U C T S - Not Used

PART 3 E X E C U T I O N - Not Used

END OF SECTION

Section 01270

MEASUREMENT AND PAYMENT

PART 1 GENERAL

1.01 SECTION INCLUDES

A. Procedures for measurement and payment plus conditions for nonconformance assessment and nonpayment for rejected Products.

1.02 AUTHORITY

A. Measurement methods delineated in Specification sections are intended to complement criteria of this Section. In event of conflict, requirements of the Specification section shall govern.

B. Project Manager will take all measurements and compute quantities accordingly.

C. Assist by providing necessary equipment, workers, and survey personnel.

D. Measurement and Payment paragraphs are included only in those Specification sections of Division 01 where direct payment will be made. Include costs in the total bid price for those Specification sections in Division 01 that do not contain Measurement and Payment paragraphs,

1.03 UNIT QUANTITIES SPECIFIED

A. Quantity and measurement estimates stated in the Agreement are for contract purposes only. Quantities and measurements supplied or placed in the Work and verified by Project Manager will determine payment as stated in Article 9 of Document 00700 - General Conditions.

B. When actual work requires greater or lesser quantities than those quantities indicated in Document 00410 – Bid Form, provide required quantities at Unit Prices contracted, except as otherwise stated in Article 9 of Document 00700 - General Conditions.

1.04 MEASUREMENT OF QUANTITIES

A. Measurement by Weight: Reinforcing steel, rolled or formed steel or other metal shapes are measured by CRSI or AISC Manual of Steel Construction weights. Welded assemblies are measured by CRSI or AISC Manual of Steel Construction or scale weights.

B. Measurement by Volume:

1. Stockpiles: Measured by cubic dimension using mean length, width, and height or thickness.

2. Excavation and Embankment Materials: Measured by cubic dimension using average end area method.

C. Measurement by Area: Measured by square dimension using mean length and width or radius.

D. Linear Measurement: Measured by linear dimension, at item centerline or mean chord.

E. Stipulated Price Measurement: By unit designated in the Agreement.

F. Other: Items measured by weight, volume, area, or linear means or combination, as appropriate, as completed item or unit of the Work.

G. Measurement by Each: Measured by each instance or item provided.

H. Measurement by Lump Sum: Measure includes all associated work.

1.05 PAYMENT

A. Payment includes full compensation for all required supervision, labor, Products, tools, equipment, plant, transportation, services, and incidentals; and erection, application or Installation of an item of the Work; and Contractor's overhead and profit.

B. Total compensation for required Unit Price work shall be included in Unit Price bid in Document 00410 – Bid Form. Claims for payment as Unit Price work, but not specifically covered in the list of Unit Prices contained in Document 00410 – Bid Form, will not be accepted.

C. Interim payments for stored materials will be made only for materials to be incorporated under items covered in Unit Prices, unless disallowed in Document 00800 - Supplementary Conditions.

D. Progress payments will be based on Project Manager's observations and evaluations of quantities incorporated in the Work multiplied by Unit Price.

E. Final payment for work governed by Unit Prices will be made on the basis of actual measurements and quantities determined by Project Manager multiplied by the Unit Price for work which is incorporated in or made necessary by the Work.

1.06 NONCONFORMANCE ASSESSMENT

A. Remove and replace work, or portions of the Work, not conforming to the Contract documents.

B. When not practical to remove and replace work, City Engineer will direct one of the following remedies:

1. Nonconforming work will remain as is, but Unit Price will be adjusted lower at discretion of City Engineer.

2. Nonconforming work will be modified as authorized by City Engineer, and the Unit Price will be adjusted lower at the discretion of City Engineer, when modified work is deemed less suitable than specified.

C. Specification sections may modify the above remedies or may identify a specific formula or percentage price reduction.

D. Authority of City Engineer to assess nonconforming work and identify payment adjustment is final.

1.07 NONPAYMENT FOR REJECTED PRODUCTS

A. Payment will not be made for any of the following:

1. Products wasted or disposed of in an unacceptable manner.

2. Products determined as nonconforming before or after placement.

3. Products not completely unloaded from transporting vehicles.

4. Products placed beyond lines and levels of required work.

5. Products remaining on hand after completion of the Work, unless specified otherwise.

6. Loading, hauling, and disposing of rejected Products.

PART 2 P R O D U C T S - Not Used

PART 3 E X E C U T I O N - Not Used

END OF SECTION

Section 01292

SCHEDULE OF VALUES

PART 1 GENERAL

1.01 SECTION INCLUDES

A. Preparation and submittal of Schedule of Values for Stipulated Price Contracts or for Major Unit Price Work on Unit Price Contracts.

1.02 PREPARATION

A. For Stipulated Price Contracts, subdivide the Schedule of Values into logical portions of the Work, such as major work items or work in contiguous construction areas. Use Section 01325 - Construction Schedule as a guide to subdivision of work items. Directly correlate Items in the Schedule of Values with tasks in the Construction Schedule. Organize each portion using the Project Manual Table of Contents as an outline for listing value of the Work by Sections. A pro rata share of mobilization, Bonds, and insurance may be listed as separate items for each portion of the Work.

B. For Unit Price Contracts, items should include a proportional share of Contractor's overhead and profit so that total of all items will equal Contract Price.

C. For lump sum equipment items, where submittal of operation and maintenance data and testing are required, include separate items for equipment operation and maintenance data where:

1. submittal of maintenance data is valued at five percent of the lump sum amount for each equipment item and

2. submittal for testing and adjusting is valued at five percent of the lump sum amount for each equipment item.

Round off figures for each item listed to the nearest $100. Set the value of one item, when necessary, to make total of all values equal the Contract Price for Stipulated Price Contracts or the lump sum amount for Unit Price Work.

1.03 SUBMITTAL

A. Submit the Schedule of Values, in accordance with requirements of Section 01330 - Submittal Procedures, at least 10 days prior to processing of the first Certificate for Payment.

B Submit the Schedule of Values in an approved electronic spreadsheet file and an 81/2-inch by 11-inch print on white bond paper.

C. Revise Schedule of Values for items affected by Contract Modifications. After City Engineer has reviewed changes, resubmit at least 10 days prior to the next scheduled Certificate for Payment date.

PART 2 P R O D U C T S - Not Used

PART 3 E X E C U T I O N - Not Used

END OF SECTION

Section 01312

COORDINATION AND MEETINGS

PART 1 G E N E R A L

1.01 SECTION INCLUDES

A. General coordination including pre-construction meeting, site mobilization conference, and progress meetings.

1.02 COORDINATION OF DOCUMENTS

A. Coordination is required throughout documents. Refer to Contract documents and coordinate as necessary.

1.03 CONTRACTOR COORDINATION

A. Coordinate scheduling, submittals, and work of various Specification sections to assure efficient and orderly sequence of Installation of interdependent construction elements.

B. Coordinate completion and clean up of the Work prior to the Date of Substantial Completion and for portions of the Work designated for City's partial occupancy.

C. Coordinate access to the site for correction of nonconforming work to minimize disruption of the City's activities where the City is in partial occupancy.

1.04 PRE-CONSTRUCTION MEETING

A. Project Manager will schedule pre-construction meeting.

B. Attendance Required: City representatives, Design Consultant, special consultants as required by Project Manager, Contractor, and major Subcontractors and Suppliers.

C. Agenda:

1. Distribution of Contract documents.

2. Designation of personnel representing the Parties and Design Consultant.

3. Review of insurance.

4. Discussion of formats for Schedule of Values and Construction Schedule.

5. Procedures and processing of Shop Drawings, substitutions, pay estimates or Applications for Payment, Requests for Information, Requests for Proposal, Modifications, and the Contract closeout, other submittals.

6. Scheduling of the Work and coordination with other contractors.

7. Review of Subcontractors and Suppliers.

8. Appropriate agenda items listed for the site mobilization conference, Paragraph 1.05.C, when pre-construction meeting and site mobilization conference are combined.

9. Procedures for testing.

10. Procedures for maintaining record documents.

1.05 SITE MOBILIZATION CONFERENCE

A. When required by Contract documents, Project Manager will schedule a conference at the Project site prior to Contractor mobilization.

B. Attendance Required: City representatives, Design Consultant, special consultants, Superintendent, and major Subcontractors.

C. Agenda:

1. Use of premises by the City and Contractor.

2. Safety and first aid procedures.

3. Construction controls provided by the City.

4. Temporary utilities.

5. Survey and layout.

6. Security and housekeeping procedures.

7. Field office requirements.

1.06 PROGRESS MEETINGS

A. Hold meetings at Project field office or other location designated by Project Manager. Hold meetings at monthly intervals, or more frequently when directed by Project Manager.

B. Attendance Required: Superintendent, major Subcontractors and Suppliers, City representatives, Design Consultant and its subconsultants as appropriate for agenda topics for each meeting.

C. Project Manager will make arrangements for meetings, and for recording minutes.

D. Project Manager will prepare the agenda and preside at meetings.

E. Provide required information and be prepared to discuss each agenda item.

F. Agenda:

1. Review minutes of previous meetings.

2. Review of construction schedule, pay estimates, cash flow curve, payroll and compliance submittals.

3. Field observations, problems, and necessary decisions.

4. Identification of problems that impede planned progress.

5. Review of submittal schedule and status of submittals.

6. Review of RFI and RFP status.

7. Modification status.

8. Review of off-site fabrication and delivery schedules.

9. Maintenance of Construction Schedule.

10. Corrective measures to regain Construction Schedule.

11. Planned progress during the succeeding work period.

12. Coordination of projected progress.

13. Maintenance of quality and work standards.

14. Effect of proposed Modifications on Construction Schedule and coordination.

15. Review Project Record Contract Drawings.

16. Other item relating to the Work.

PART 2 P R O D U C T S - Not Used

PART 3 E X E C U T I O N - Not Used

END OF SECTION

Section 01321

CONSTRUCTION PHOTOGRAPHS

PART 1 G E N E R A L

1.01 SECTION INCLUDES

A. Photographic requirements for construction photographs and submittals.

1.02 DEFINITIONS

A. Pre-construction Photographs: Photographs taken, in sufficient numbers and detail, prior to Date of Commencement of the Work, to show original construction site conditions.

B. Progress Photographs: Photographs, taken throughout the duration of construction at regular intervals and from fixed vantage points, pre-approved by the City, that document progress of the Work.

C. Finished Photographs: Photographs, taken by a professional photographer near Date of Substantial Completion and before City Council's acceptance of the Work, that are suitable for framing and for use in brochures or on the Internet

1.03 SUBMITTALS

A. Refer to Section 01330, Submittal Procedures, for submittal requirements.

B. Format and Media. Film or digital photography may be used. Submit color photographs, unless otherwise specified.

1. Prints. Submit each Progress or Pre-construction Photograph print in a three-hole plastic pocket or sleeve, bound in a three-ring notebook. Produce prints on photographic-quality paper approved by Project Manager. Minimum size for Pre-construction Photograph prints shall be 3-inches by 5-inches. Progress Photograph prints shall be 8-inches by 10-inches.

2. Film. Use 35mm or larger color film. Submit negatives used to make submitted photographs, in 3-hole 8-1/2 inch by 11-inch plastic sheets with sleeves for negatives.

3. Digital Photography. Use 2.1 megapixel density or greater for photographs. Scanned photographs must equal or exceed 400 dots

per inch when scanned from 8-inch by 10-inch prints. Submit digital photographic files on computer disks. Format disks for MS-DOS (Microsoft Disk Operating System) filing system and in JPEG (Joint Photographic Experts Group) format.

C. Submittal Quantities and Frequencies.

1. Pre-construction Photographs:
   a. For Stipulated Price Contracts, submit two sets of Pre-construction Photographs, if required, prior to first Application for Payment.
   b. For Unit Price Contracts, submit two sets of Pre-construction Photographs prior to start of construction operations.

2. Progress Photographs:
   a. For Stipulated Price Contracts, submit three sets of Progress Photographs with each Application for Payment at the times established for submittal of Applications for Payment. Monthly Applications for Payment shall be deemed incomplete if not accompanied by the required Progress Photographs. Contractor's failure or election to not submit a monthly Application for Payment shall not affect the requirement for monthly Progress Photographs.
   b. Progress Photographs are not required for Unit Price Contracts unless otherwise specified.

3. Finished Photographs: For Stipulated Price Contracts submit two sets of Finished Photographs, if required, after Date of Substantial Completion and prior to final payment. Each set shall contain one 11-inch by 14-inch matte finish color photographic print from each of the two vantage points pre-approved by the City. Vantage points for Finished Photographs will be approved separately from vantage points approved for Progress Photographs. Finished Photographs are not required for Unit Price Contracts unless otherwise specified.

D. Labeling. Place a label on the back of each photographic print, applied so as to not to show through on the front. Labels shall contain the following information:

1. Name of Project, address of Project and GFS Number.

2. Name and address of Contractor.

3. Date photograph was taken.

4. Location photo was taken from and short description of photo subject.

5. Name and address of professional photographer who took the photograph, if applicable.

E. Hand-deliver or transmit prints in standard photographic mailers marked "Photographs - Do Not Bend".

F. Photographic prints, negatives, photographic files and disks become the property of the City. Do not be publish photographs without written consent by the City.

1.04 QUALITY ASSURANCE

A. Contractor shall be responsible for the quality of and timely execution and submittal of photographs.

B. For Finished Photographs, Contractor shall use a professional photographer, with five years minimum professional experience in the Houston area. Contractor shall submit name, address and credentials of professional photographer for Project Manager's review and approval.

PART 2 PRODUCTS - Not Used

PART 3 EXECUTION

3.01 PRE-CONSTRUCTION PHOTOGRAPHS

A. Prior to commencement of construction operations, photograph the site to include initial construction corridor, detour routes, and staging or storage areas.

1. For Stipulated Price Contracts, unless specified as a requirement in other Sections, these photographs are optional for Contractor, but are highly recommended for areas bounded by other property owners.

2. Pre-construction photographs are required for Unit Price Contracts. For line projects with scheduled construction segments, take Pre-construction Photographs prior to commencement of work on each segment.

B. Prepare Pre-construction Photographs as follows:

1. Show the following information on a non-reflective chalkboard placed within the picture frame:
   a. Job number.
   b. Project Number.
   c. Date and time photographs were taken (Automatic date/time in negative is acceptable).
   d. Baseline station, direction of view (i.e. N, S, NW, etc.) and house number or street address and street name.

2. Pre-construction Photographs shall indicate condition of the following:
   a. Esplanades and boulevards.
   b. Yards (near side and far side of street).
   c. House walks and sidewalks.
   d. Curbs.
   e. Areas between walks and curbs.
   f. Particular features (e.g. yard lights, shrubs, fences, trees).

3. Show date photographs were taken on negatives.

C. Show the location of vantage points and direction of shots on a key plan of the site.

3.02 PROGRESS PHOTOGRAPHS

A. Progress Photographs document monthly advancement of the Work. Select vantage points for each shot so as to best show status of construction and progress since last photograph submittal. Select camera stations that will require little or no movement or adjustment over the duration of construction.

B. Take monthly Progress Photographs at regular intervals to coincide with cutoff dates associated with each Application for Payment.

3.03 FINISHED PHOTOGRAPHS

A. Finished Photographs shall be "staged" and taken by a professional photographer to depict the most flattering images of a finished facility. Two vantage points, from which Finished Photographs will be taken, shall be agreed to in advance by the City. Photographer shall consider lighting, time of day, height of eye, landscaping and placement of vehicles, people and other props in each picture. Filters and post-photography processing may be utilized to achieve a finished product acceptable to the City.

3.04 LOCATION

A. Vantage points, times and conditions for camera stations and photography for Progress and Finished Photographs shall be mutually agreed upon by the City, Contractor and Photographer. Progress Photograph vantage points may be changed by mutual agreement as the Work progresses, at no additional cost to the City.

END OF SECTION

Section 01325

CONSTRUCTION SCHEDULE

PART 1 G E N E R A L

1.01 GENERAL

A. Provide Construction Schedules for the Work included in this Contract in accordance with requirements in this Section. Create Construction Schedule using Critical Path Method (CPM) computer software capable of mathematical analysis of Precedence Diagramming Method (PDM) plan. Provide printed activity listings and bar charts in formats described in this Section.

B. Combine activity listings and bar charts with narrative report to form Construction Schedule submittal for Project Manager.

1.02 SCHEDULING STAFF

A. Employ or retain services of individual experienced in CPM scheduling for duration of the Contract. Individual shall cooperate with Project Manager and update schedule monthly as required to indicate current status of the Work.

1.03 SUBMITTALS

A. Conform to requirements of Section 01330 - Submittal Procedures.

B. During preconstruction meeting, as described in Section 01312 - Coordination and Meetings, provide sample bar charts and activity listings produced from scheduling software proposed. Scheduling software is subject to review by Project Manager and must meet requirements provided in this Section. Project Manager will provide review of samples within seven days of submittal.

C. Within 21 days of receipt of approval of Contractor's format, or 30 days of Notice to Proceed, whichever is later, submit proposed Construction Schedule for review. Base Construction Schedule submittal on the following:

1. Level of detail and number of activities required in schedule are dependent on project type.
   a. For wastewater projects, categorize work type and area code in schedule.
      1) For wastewater rehabilitation projects, there are six work-type categories. An area code will be assigned for each

Meter Service Area or Basin. Include at least one activity for each unique combination of work type and area code. Normal schedules of wastewater rehabilitation projects contain between 35 and 100 activities, depending on number of basins and work types involved in each basin.

2) For wastewater relief projects (line work), area codes will be assigned geographically.

3) For wastewater plant or facility work, other criteria may apply to assignment of area codes, such as a combination of geographical and craft categories.

b. For projects with multiple types of tasks within scope, indicate types of work separately within schedule.

c. For projects with work at different physical locations or service areas, or different facilities within a site, indicate each location or facility separately within schedule. Show work on each floor of multi-story building as separate tasks.

d. For projects with multiple crafts or significant Subcontractor components, indicate elements separately within schedule. Unless permitted by Project Manager, tasks shall consist of work covered by only one division of Project Manual.

2. Unless permitted by Project Manager, each scheduled task shall be same as Schedule of Values line item, and vice versa.

3. For projects with Major Unit Price Work, indicate Shop Drawing submittal and review, purchase, delivery, and Installation dates on Project schedule. Include activities for testing, adjustment, and delivering O&M manuals.

4. No task except the acquisition of Major Unit Price Work shall represent more than one percent of Original Contract Price for facility projects and three percent of Original Contract Price for other projects. Duration of tasks may not exceed 40 calendar days.

5. For projects where operating facilities are involved, identify each period of work that will impact any process or operation in the schedule and that must be agreed to by Project Manager and facility operator prior to starting work in the area.

D. Construction Schedule submittals shall include:

1. printed bar charts that meet criteria outlined in this Section and are produced by Contractor's approved scheduling software;

2. activity listings that meet criteria outlined in this Section and are produced by Contractor's approved scheduling software; and

3. a predecessor/successor listing sorted by Activity ID that meets criteria outlined in this Section and is produced by Contractor's scheduling software.

4. A logic network diagram is required with the first Construction Schedule submittal for facilities projects.

5. Prepare and submit graphic or tabular display of estimated monthly billings (i.e. a cash flow curve for the Work) with the first schedule submittal. This information is not required in monthly updates, unless significant changes in work require re-submittal of schedule for review. Display shall allocate units indicated in bid schedule or Schedule of Values to Construction Schedule activities. Weighted allocations are acceptable, where appropriate. Dollar value associated with each allocated unit will be spread across the duration of that activity on a monthly basis. Total for each month and cumulative total will be indicated. These monthly forecasts are only for Project Manager's planning purposes. Monthly payments for actual work completed will be made in accordance with Document 00700 - General Conditions.

6. Narrative Report that provides the information outlined in this Section.

E. No payment will be made until Project Manager approves Construction Schedule and billing forecast.

F. If Contractor desires to make changes in its method of operating and scheduling, after Project Manager has reviewed original schedule, notify Project Manager in writing, stating reasons for changes. When Project Manager considers these changes to be significant, Contractor may be required to revise and resubmit for review all or affected portion of Contractor's Construction Schedule to show effect on the Work.

G. Upon written request from Project Manager, revise and submit for review all or any part of Construction Schedule submittal to reflect changed conditions in the Work or deviations made from original schedule.

H. Updated Construction Schedule with actual start and actual finish dates, percent complete, and remaining duration of each activity shall be submitted monthly. Data date used in updating monthly Construction Schedule shall be the same date as used in monthly Payment Application. Monthly update of Construction Schedule is required for monthly Payment Application to be processed for payment.

1.04 SCHEDULING COMPUTER SOFTWARE REQUIREMENTS

A. Contractor's scheduling software shall be capable of creating bar charts and activity listings, which can be sorted by various fields (i.e. Activity ID, Early Start, Total Float, Area Code, Specification Section number, and Subcontractor). Use software capable of producing logic network diagram.

B. Use scheduling software capable of producing activity listings and bar charts with the following information for each activity in the schedule:

1. Activity ID
2. Activity Description
3. Estimated (Original) Duration
4. Remaining Duration
5. Actual Duration
6. Early Start Date
7. Late Start Date
8. Early Finish Date
9. Late Finish Date
10. Free Float
11. Total Float
12. Activity Codes (such as Area Code, Work Type, Specification Section, Subcontractor)

C. Use scheduling software capable of printing calendars using mathematical analysis of schedule, indicating standard workdays of week and scheduled holidays.

D. Use scheduling software capable of printing activity listing that indicates predecessors and successors, lag factors and lag relationships used in creating logic of the schedule.

E. Use scheduling software to provide monthly time in Bar Chart format and scale with 12-month scale not to exceed one page width. Bar charts may be

printed or plotted on 8-1/2 by 11-inch, 8-1/2 by 14-inch or 11 by 17-inch sheet sizes. Over-size plots are not acceptable.

1.05 NARRATIVE SCHEDULE REPORT

A. Narrative schedule report shall list activities started this month, activities completed this month, activities continued this month, activities scheduled to start or complete next month, problems encountered this month, and actions taken to solve these problems.

B. Narrative schedule report shall describe changes made to Construction Schedule logic (i.e. changes in predecessors and lags), activities added to schedule, activities deleted from schedule, any other changes made to the schedule other than addition of actual start dates and actual finish dates and changes of data date and remaining durations for re-calculation of mathematical analysis.

PART 2 P R O D U C T S - Not Used

PART 3 E X E C U T I O N - Not Used

END OF SECTION

Section 01326

CONSTRUCTION SCHEDULE (BAR CHART)

PART 1 G E N E R A L

1.01 SECTION INCLUDES

A. Provide an initial Construction Schedule as required by this section for the Work. Do not start construction until Project Manager reviews the schedule.

1.02 FORM AND CONTENT OF INITIAL CONSTRUCTION SCHEDULE

A. Bar Chart:

1. Show major construction activities such as pipe laying, by traffic control phases or other approved key areas; tunnel construction, pavement removal, pavement replacement, pressure testing, chlorination, clean up and punch list as separate activities on the schedule.

2. Show week duration for each activity.

3. Show separate activities for each Shop Drawing and Product Data submittal critical to timely completion. Show submittal dates and dates Project Manager needs to provide approved submittals.

4. Provide separate horizontal bar for each activity. List start and finish date for each activity at left side of diagram.

5. Horizontal Time Scale: Identify first work day of each week.

6. Scale and Spacing: Notes must be legible. Allow space for notations and future revisions.

7. Order of Listings: Order bar chart listings by phases or other approved groups of activities that are contiguous. List activities in chronological order within each phase or group.

B. Narrative Description:

1. Submit narrative descriptions of anticipated work sequences as indicated by the sequence of activities presented in the schedule.

2. Discuss any activity that affects the public (such as phases of traffic control), interaction with specific forces of the City (such as valve operation, chlorination and testing) or other associated contractors.

1.03 PROGRESS REVISIONS

A. Submit progress revisions or necessary information to complete and process Payment Applications. When required, re-submittals for rejected revisions must be submitted and reviewed prior to the following month's processing of a Payment Application. The following month's Payment Application will not be processed until the re-submittal is reviewed and required progress revisions are received.

B. Provide a narrative report to describe:

1. Major changes in scope.

2. Revised projections in progress, completion, or changes in activity duration.

3. Other identifiable changes.

4. Problem areas, anticipated delays, and the impact on schedule.

5. Corrective action recommended and its effect.

6. Effect of changes on schedules or other contractors.

7. Product delivery lead times.

C. Include additional data with Bar Chart described in Paragraph 1.03A of this Section:

1. Show original dates for each activity in the approved initial progress schedule by narrow bar next to a wider bar for the current schedule.

2. Show date each activity actually started or finished when an event has occurred. Clearly identify actual dates in two right-most columns in left portion of an 11 by 17-inch chart.

3. Indicate the percentage progress to the date of submittal for each activity.

1.04 SUBMITTALS

A. Submit the initial progress schedule within 15 days after award of contract. Project Manager will review the schedule and return a reviewed copy within 21 days after receipt.

B. Cut-off dates for progress revisions may be as early as the 20th of the month to avoid delaying processing of Payment Applications. Use the cut-off date for the first approved revision for further revisions.

C. When required, re-submit within seven days after return of review copy.

D. Include connecting lines between bars in the schedule to indicate the sequence that activities will be accomplished. Connecting lines when the activity's start or finish is modified will identify impact of preceding or succeeding activities. Submit a minimum of six copies of the bar chart on 11 by 17-inch opaque reproductions. Project Manager will retain five copies and return the remaining copy.

PART 2 P R O D U C T S - Not Used

PART 3 E X E C U T I O N - Not Used

END OF SECTION

Section 01330

SUBMITTAL PROCEDURES

PART 1 G E N E R A L

1.01 SECTION INCLUDES

A. Submittal procedures for:

1. Schedule of Values
2. Construction Schedules and Cash Flow Curve (billing forecast).
3. Shop Drawings, Product Data and Samples
4. Operations and Maintenance (O&M) Data
5. Manufacturer's Certificates
6. Construction Photographs
7. Project Record Documents and monthly certification.
8. Video Tapes
9. Design Mixes

1.02 SUBMITTAL PROCEDURES

A. Scheduling and Handling:

1. Submit Shop Drawings, data and Samples for related components as required by Specifications and Project Manager.
2. Schedule submittals well in advance of need for construction Products. Allow time for delivery of Products after submittal approval.
3. Develop submittal schedule that allows sufficient time for initial review, correction, resubmission and final review of all submittals. Allow a minimum of 30 days for initial review. Project Manager will review and return submittals to Contractor as expeditiously as possible but time required for review will vary depending on complexity and quantity of data submitted.

4. Project Manager's review of submittals covers only general conformity to Drawings, Specifications and dimensions that affect layout. Contractor is responsible for quantity determination. No quantities will be verified by Project Manager. Contractor is responsible for errors, omissions or deviations from Contract requirements; review of submittals does not relieve Contractor from the obligation to furnish required items in accordance with Drawings and Specifications.

5. Submit five copies of documents unless otherwise specified.

6. Revise and resubmit submittals as required. Identify all changes made since previous submittal.

7. Assume risk for fabricated Products delivered prior to approval. Do not incorporate Products into the Work, or include payment for Products in periodic progress payments, until approved by Project Manager.

B. Transmittal Form and Numbering:

1. Transmit each submittal to Project Manager with Transmittal letter which includes:
   a. Date and submittal number
   b. Project title and number
   c. Names of Contractor, Subcontractor, Supplier and manufacturer
   d. Identification of Product being supplied
   e. Location of where Product is to be Installed
   f. Applicable Specification section number

2. Identify deviations from Contract documents clouding submittal drawings. Itemize and detail on separate 8-1/2 by 11-inch sheets entitled "DEVIATIONS FOR _____." When no deviations exist, submit a sheet stating no deviations exist.

3. Have design deviations signed and sealed by an appropriate design professional, registered in the State of Texas.

4. Sequentially number transmittal letters beginning with number one. Use original number for resubmittals with an alphabetic suffix (i.e., 2A for the first resubmittal of submittal 2, or 15C for third resubmittal of submittal 15, etc.). Show only one type of work or Product on each submittal. Mixed submittals will not be accepted.

C. Contractor's Stamp:

1. Apply Contractor's Stamp certifying that the items have been reviewed in detail by Contractor and that they comply with Contract requirements, except as noted by requested variances.

2. As a minimum, Contractor's Stamp shall include:
   a. Contractor's name
   b. Job number
   c. Submittal number
   d. Certification statement Contractor has reviewed submittal and it is in compliance with the Contract
   e. Signature line for Contractor

D. Submittals will be returned with one of the following Responses:

1. "ACKNOWLEDGE RECEIPT" when no response and resubmittal is required.

2. "NO EXCEPTION" when sufficient information has supplied to determine that item described is accepted and that no resubmittal is required.

3. "EXCEPTIONS AS NOTED" when sufficient information has been supplied to determine that item will be acceptable subject to changes, or exceptions, which will be clearly stated. When exceptions require additional changes, the changes must be submitted for approval. Resubmittal is not required when exceptions require no further changes.

4. "REJECTED-RESUBMIT" when submittal does not contain sufficient information, or when information provided does not meet Contract requirements. Additional data or details requested by Project Manager must be submitted to obtain approval.

1.03 MANUFACTURER'S CERTIFICATES

A. When required by Specification sections, submit manufacturers' certificate of compliance for review by Project Manager.

B. Place Contractor's Stamp on front of certification.

C. Submit supporting reference data, affidavits, and certifications as appropriate.

D. Product certificates may be recent or from previous test results, but must be acceptable to Project Manager.

1.04 DESIGN MIXES

A. When required by Specification sections, submit design mixes for review.

B. Place Contractor's Stamp, as specified in this section, on the front of each design mix.

C. Mark each mix to identify proportions, gradations, and additives for each class and type of mix submitted. Include applicable test results from samples for each mix. Perform tests and certifications within 12 months of the date of the submittal.

D. Maintain copies of approved mixes at mixing plant.

1.05 CHANGES TO CONTRACT

A. Changes to Contract may be initiated by completing a Request for Information form. Project Manager will provide a response to Contractor by completing the form and returning it to Contractor.

1. If Contractor agrees that the response will result in no increase in cost or time, a Minor Change in the Work will be issued by City Engineer.

2. If Contractor and Project Manager agree that an increase in time or cost is warranted, Project Manager will forward the Request for Proposal for negotiation of a Change Order.

PART 2 P R O D U C T S - Not Used

PART 3 E X E C U T I O N - Not Used

END OF SECTION

Section 01340

SHOP DRAWINGS, PRODUCT DATA, AND SAMPLES

PART 1 G E N E R A L

1.01 SECTION INCLUDES

A. Methods, schedules, and processes to be followed for Shop Drawings, Product Data and Sample submittals.

1.02 REQUIREMENT

A. Submit Shop Drawings, Product Data and Samples as required by Document 00700 - General Conditions and Specification sections, using procedures specified in Section 01330 - Submittal Procedures and the requirements of this Section.

B. Shop Drawings, Product Data and Samples are not considered Contract documents.

1.03 SHOP DRAWING/SUBMITTAL SCHEDULE

A. Submit a separate Shop Drawing submittal schedule at same time the Construction Schedule is submitted. List Products for which Shop Drawings and other submittals are required in the order that they appear in Specifications. Include Product Data and Sample submittals in the schedule. Payment Applications or Certificates for Payment will not be processed until Project Manager has approved the Shop Drawing submittal schedule.

1.04 SHOP DRAWINGS

A. Submit a minimum of seven sets of Shop Drawings and Product Data in a form and quality suitable for microfilming. Review and sign Shop Drawings indicating compliance with the Contract.

B. Place Contractor's Stamp on each drawing as described in Section 01330 - Submittal Procedures.

C. Show the following accurately and distinctly:

1. Field and erection dimensions;

2. Arrangement and section views;

3. Relation to adjacent materials or structure, including complete information for making connections between the Work and work under other contracts;

4. Types of Products and finishes;

5. Parts list and descriptions;

6. Assembly drawings of equipment components and accessories showing respective positions and relationships to the complete equipment package;

7. Identify details by referencing drawing sheet and detail numbers, schedule or room numbers as shown on the Contract drawings, where necessary for clarity.

D. Scale drawings to provide a true representation of the specific equipment or item Furnished.

E. Coordinate and submit components, necessary for Project Manager to adequately review submittal, as a complete package. Reproduction of the Drawings for use in Shop Drawings is not allowed.

F. For major changes to original documents, submit Computer-Aided Design (CAD) drawings on a media acceptable to Project Manager.

1.05 PRODUCT DATA

A. Submit Product Data for review as required in Specifications.

B. Place Contractor's stamp, on each data item submitted, as described in Section 01330 - Submittal Procedures.

C. Mark each copy to identify applicable Products, models, and options to be used in the Work. Where required by Specifications, supplement manufacturers' standard data to provide information unique to the Work.

D. Give manufacturers, trade name, model or catalog designation and applicable reference standard for Products specified only by reference standards.

E. Pre-approved and Pre-qualified Products.

1. For "pre-approved", "pre-qualified" and "approved" Products named in the City standard products list, provide an appropriate list designation,

as described in Section 01630 - Product Substitution Procedures, within 30 days after Notice to Proceed.

2. For Products proposed as alternates to "approved" products, provide information required to demonstrate that the proposed Products meet the level of quality and performance criteria of the "approved" product.

1.06 SAMPLES

A. Submit Samples for review as required by Specifications. Have Samples reviewed and signed by a Registered Professional.

B. Place Contractor's stamp on each Sample or firmly attach a sheet of paper with Contractor's stamp, as described in Section 01330 - Submittal Procedures.

C. Submit the number of Samples specified in Specifications; Project Manager will retain one.

D. Reviewed Samples that may be used in the Work are identified in Specifications.

PART 2 P R O D U C T S - Not Used

PART 3 E X E C U T I O N - Not Used

END OF SECTION

SECTION 01351

ENVIRONMENTAL SAFETY AND WORKER PROTECTION

PART 1 GENERAL

1.01 SECTION INCLUDES

Environmental Safety and Worker Protection including monitoring emissions and exposure to workers and providing an appropriate response. The role of the Certified Industrial Hygienist (CIH) is also defined.

1.02 MEASUREMENT AND PAYMENT

No separate measurement and payment for work performed under this Section. The Contractor shall include the cost for this work in the contract bid price for work of which this is a component part.

1.03 REFERENCES

The following is a list of applicable requirements to this project. It is not intended to be a complete listing of all laws and regulations to which the Contractor must comply.

A. Code of Federal Regulations

1. 29 CFR 1910, "Occupational Safety and Health Standards".

   a. 29 CFR 1910.146 "Permit-required confined spaces".

2. 29 CFR 1926, "Safety and Health Regulations for Construction" (Construction Industry Standards).

   a. 29 CFR 1926.33 "Access to Employee Exposure and Medical Records".

   b. 29 CFR 1926.51, "Sanitation Standard".

   c. 29 CFR 1926.59, "Hazard Communication".

   d. 29 CFR 1926.62, "Lead".

   e. 29 CFR 1926.103 "Respiratory Protection".

3. 40 CFR 50, "National Primary and Secondary Ambient Air Quality

Standards"

a. 40 CFR 50 Appendix B, "Reference Method for the Determination of Suspended Particulate Matter in the Atmosphere (High Volume Method)".

b. 40 CFR 50 Appendix G, "Reference Method for the Determination of Lead in Suspended Particulate Matter Collected from Ambient Air".

4. 40 CFR 58, "Ambient Air Quality Surveillance".

5. 40 CFR 60 Appendix A, "Visual Determination of Fugitive Emissions from Material Sources and Smoke Emissions from Fires".

6. 40 CFR 117, "Determination of Reportable Quantities for Hazardous Substances".

7. 40 CFR 122, "Administered Permit Program: The National Pollutant Discharge Elimination System".

B. National Institute for Occupational Health and Safety

NIOSH Method 7082, "Lead" (or equivalent).

C. American Society for Testing and Materials

ASTM D3335, "Test Method for Low Concentrations for Lead, Cadmium, and Cobalt in Paint by Atomic Absorption Spectroscopy."

D. EPA (Environmental Protection Agency) Publications

1. SW-846, "Test Methods for Evaluating Solid Waste - Physical/Chemical Methods".

2. EPA Method 3050, "Acid Digestion of Sediments, Sludges, and Soils".

E. SSPC Guide 6, "Guide for Containing Debris Generated During Paint Removal Operations".

F. SSPC Guide 7, "Guide for the Disposal of Lead Contaminated Surface Preparation Debris".

G. SSPC Publication 91-18, "Industrial Lead Paint Removal Handbook".

H. Texas Commission on Environmental Quality

1. Texas Administrative Code (TAC) 30, Chapter 101, "General Rules".

2. Texas Administrative Code (TAC) 30, Chapter 111, "Control of Air Pollution from Visible Emissions and Particulate Matter".

3. Texas Administrative Code (TAC) 30, Chapter 290, "Water Hygiene".

4. Texas Administrative Code (TAC) 30, Chapter 307, "Surface Water Quality Standards".

5. Texas Administrative Code (TAC) 30, Chapter 309, "Effluent Limitations".

6. Texas Administrative Code (TAC) 30, Chapter 335, "Industrial Solid Waste and Municipal Hazardous Waste".

1.04 SUBMITTALS

A. Submittals shall conform to requirements of Section 01330 – Submittal Procedures.

B. Submittals shall conform to appropriate codes for regulatory requirements.

1.05 DEFINITION

A. Acceptance Criteria: Minimum standards for the content of programs, plans, procedures, and designs required by this specification for the performance of this project. Acceptance criteria will be the basis for judging the responsiveness of Contractors' programs and will also be used as a basis for suspending work, if necessary.

B. Action Level: Employee exposure, without regard to the use of respirators, to an airborne concentration of lead of 30 micrograms per cubic meter of air (µg/m3) calculated as an eight hour time-weighted average (TWA).

C. CERCLA: Comprehensive Environmental Response, Compensation, and Liability Act; commonly called Superfund. Federal laws addressing the clean up of hazardous waste sites. Amended in 1986 by Superfund Amendments and Re-Authorization Act (SARA). EPA implementing regulations are contained in 40 CFR 300-373.

D. Competent Person: One who is capable of identifying existing and predictable lead hazards in the surroundings or working conditions and who has authorization to take prompt corrective measures to eliminate them.

E. Containment System: An enclosure built around lead paint removal areas designed to contain lead paint debris and prevent emissions to the environment.

F. Dust Collection: Mechanical ventilation system designed specifically for the containment, capture, and removal of airborne particulate from the containment. Dust collection systems shall include ductwork, plenums and/or hoppers, and dust collector(s) for the removal of leaded paint dust from the air stream prior to discharging to the atmosphere.

G. Emission: A release of material to the air, water, or ground.

H. Entry/Exit Airlock: An isolated enclosure located at the entrance of the containment in which the workers remove contaminated dust and debris from their work clothes.

I. EPA: The US. Environmental Protection Agency. Regulations are contained in Title 40 of the Code of Federal Regulations (40 CFR).

J. Hazardous Waste (lead paint debris): Waste that is classified as hazardous due to its concentrations of regulated hazardous substances. Paint debris is classified as hazardous waste if, after testing by the Toxicity Characteristic Leaching Procedure (TCLP), the leachate contains any of the 8 metals or other substances in concentrations at or above limits established in 40 CFR 261.

K. HEPA: A high efficiency particulate filter (HEPA) that is 99.97% efficient against particles of 0.3 microns in size or larger.

L. Lead Containing Dust and Debris: Dust and debris generated during the project which contains lead in any amount, including but not limited to pulverized paint, spent abrasive, filters (wet and dry), and containment materials upon which lead is still present.

M. NIOSH: National Institute of Occupational Safety and Health.

N. OSHA: Occupational Safety and Health Administration. Standards are contained in Title 29 of the Code of Federal Regulations, Parts 1910 and 1926 (29 CFR 1910 and 29 CFR 1926).

O. Owner: The City of Houston

P. PEL: Permissible Exposure Limit. An employee exposure, without regard to the use of respirators, to an airborne concentration of lead of 50 µg/m3 over an 8 hour TWA.

Q. POTW: Publicly Owned Treatment Works

R. RCRA: Resource Conservation and Recovery Act. Federal law pertaining to hazardous waste management. EPA implementing regulations are contained in 40 CFR 240-280.

S. Regulated Area: Area established by the Contractor to demarcate the zone(s) beyond which airborne concentrations of lead do not exceed the Action Level.

T. SSPC: Society for Protective Coatings. An independent, non-profit organization of engineers, technical specialists, and Contractors whose goal is research and development of new coatings and methods for removal, application, and disposal of existing coatings on industrial structures.

U. Tarpaulins: Flexible fabric, vinyl, plastic or canvas cover sheets, impenetrable to dust, wind, and water, used to enclose the cable and/or scaffold support system comprising the containment enclosure.

V. TCLP: Toxicity Characteristic Leaching Procedure. Laboratory tests conducted on wastes that determine the amount of hazardous materials that leach out into a test solution. The test is intended to simulate the properties of water as it leaches through a solid waste landfill. TCLP testing is defined in 40 CFR 261, Appendix II.

W. TSP: Total Suspended Particulate

PART 2 PRODUCTS

2.01 MATERIAL AND EQUIPMENT

A. The Contractor is to supply materials and equipment to insure the safety and protection of workers and the environment in accordance with these specifications.

PART 3 EXECUTION

3.01 ENVIRONMENTAL PROTECTION AND MONITORING

NOTE: Section 09971 "Painting and Protective Coatings", 2.04 "Containment System" specifically identifies containment system requirements.

A. Protection of Ambient Air: Visible emissions are to be controlled to meet, as a minimum, TAC 30 Chapter 111," Control of Air Pollution from Visible Emissions and Particulate Matter" requirements and SSPC-Guide 6I (CON), Level 1 Emissions. Air monitoring and analysis may be performed by the City during abrasive blast cleaning operations. Such monitoring will be in accordance with 40

CFR 50, Appendix B, "Reference Method for the Determination of Suspended Particulate Matter in the Atmosphere" and/or 40 CFR 50, Appendix G, "Reference Method for the Determination of Lead in Suspended Particulate Matter Collected from Ambient Air". The limits for down wind pollutant concentrations allowed during blasting operations are as follows:

PM-10: 450 micrograms/cubic meter/ 8 hr.. (40 CFR 50.6)

Lead (Pb): 13.5 micrograms/cubic meter/8 hr.. (40 CFR 50.12)

Visible emissions and/or monitored emissions for PM-10 and TSP lead in excess of the above levels shall be cause for shut down of the project until corrections to control/ containment system or paint removal/ surface preparation operations are made to comply with these requirements.

B. Protection of Surface and Storm Water: The Contractor shall take all necessary precautions to ensure lead contaminants do not enter surface waters or storm water drainage systems.

1. The Contractor shall protect the area around ditches and drainage inlets. Daily verification of proper protection to minimize the potential contaminants reaching the drainage system shall be performed.

2. The Contractor shall collect all potentially contaminated process waters for testing and, as appropriate, treatment. Process water from pressure washing, wet abrasive blast cleaning or hygiene facilities shall not be discharged to drainage systems or surface waters.

3. The Contractor may remove lead or other heavy metals from such waters through filtration, ion exchange or other approved means. Following treatment, water samples must be tested prior to disposal. Discharge to sanitary sewer lines requires authorization, in writing, from a POTW.

C. Protection of Soil and Grounds: The Contractor shall protect the soil around the structure to ensure that the soil does not become contaminated. Where lead is present in the coatings to be removed, as indicated in Section 02136 "Waste Material Handling and Disposal", the Contractor shall provide for the sampling and analysis of soil samples for total lead content.

1. Sampling and analysis shall be performed prior to commencement of paint removal operations to establish a background "base level". Soil samples shall be taken 3 feet from the base of the tank(s), at a distance of 6-10 feet beyond the proposed containment structure and at the property line.

2. Samples from each area shall be taken in a minimum of four directions, at

circular increments of 90^0, one of which shall include the direction of prevailing wind. Samples shall also be obtained, at the direction of the engineer, at the closest points of public access (i.e. housing, park, school).

3. The soil sampling procedure shall be as outlined in SSPC Guide 6 Section 5.5.5. Each sampling point shall be sufficiently identified on a site map to allow return to the exact location upon project completion.

4. Each sample shall be split in two portions, one for immediate analysis and the other sealed, preserved and furnished to the Engineer. The samples shall be analyzed in accordance with EPA Method 3050, "Acid Digestion of Sediments, Sludges and Soils", and shall be performed by a qualified laboratory approved by the Engineer.

5. Samples shall be obtained at the completion of work (post-construction samples) from all locations from which pre-construction samples were obtained. Samples shall be collected, handled and tested in the same manner as described above.

6. Upon completion of the work, soils found to be contaminated with lead in greater quantity than found in the background "base level", established at the start of the work, shall be removed by the Contractor to the depth necessary to achieve a lead content equivalent to, or below, the pre-construction back ground levels. Disposal shall be in accordance with applicable regulations.

7. The Contractor shall replace in-kind (i.e., topsoil, structural fill, etc.) with an equivalent amount of non-contaminated soil, compact in place and grade to pre-existing conditions. The Contractor shall also replace in-kind any surface improvements, such as grass, shrubs, etc. that were damaged or destroyed by the work. The soil removal, replacement and related work is to be performed by the Contractor at no additional cost to the Owner.

3.02 WORKER PROTECTION

A. The Contractor shall develop a written Compliance Program to establish and implement practices and procedures for assuring that no employee is exposed to lead at concentrations greater than 50 micrograms per cubic meter of air ($\mu g/m^3$), the OSHA permissible exposure limit (PEL). This program is in addition to other OSHA hazard communication and safety and health requirements of the project, and shall be revised and updated at least every six months.

1. The program shall establish methods for complying with this specification and the OSHA Construction Industry Lead Standard, 29 CFR 1926.62(e)(2)(ii). The Federal regulation is referred to as the "Lead

Standard" for the purpose of this specification.

2. The program shall apply to all Contractor employees associated with lead on the project, and to subcontractors working under the direct control of the Contractor who are associated with lead on the project.

3. The program shall assign the specific responsibility for implementation and enforcement of the program to the Contractors' company management. The Contractor's Competent Person(s) shall be identified, by name, and qualifications submitted. The Competent Person shall be on-site during any operations which involve the removal, handling or disturbing of lead containing materials.

4. The program shall contain a description of each activity in which lead is emitted (e.g. equipment used, material involved, controls in place, crew size, employee job responsibilities, operating procedures and maintenance practices).

5. The program shall contain a report of the technology considered in meeting the PEL and air monitoring data which documents the source of lead emissions.

6. The program shall contain a work practice program which includes items required in the lead standard such as protective clothing and equipment, housekeeping, and hygiene facilities and practices.

B. Exposure Monitoring: The Contractor shall be responsible for conducting and reporting worker exposure assessments in accordance with 29 CFR 1926.62.

1. Representative personal air samples shall be collected at the beginning of the lead removal work to determine employee lead exposures. Tasks involving potential lead exposure include, but are not limited to, paint removal operations, clean-up, and debris handling operations. Full shift (at least 7 hours) air samples shall be collected for each job classification in the exposure area. The range of exposures for lead removal and cleanup activities shall be determined.

2. During the initial monitoring, workers performing the following activities (or equivalent) shall be protected to the anticipated exposure levels which are dictated by the lead standard:

   a. 500 $\mu g/m^3$: Manual demolition of structures containing lead-containing coatings or paint (e.g., dry wall), manual scraping, manual sanding, heat gun applications, power tool cleaning with dust collection systems, and spray painting with lead paint.

b. 2,500 $\mu g/m^3$: Using lead-containing mortar, lead burning, or conducting the following activities where lead-containing coatings or paint are present: rivet busting, power tool cleaning without dust collection systems, clean-up activities where dry expendable abrasives are used, and the movement and removal of abrasive blasting enclosures.

c. More than 2,500 $\mu g/m^3$: Activities involving lead containing coatings or paint on structures disturbed by abrasive blasting, welding, cutting, and torch burning.

3. Protection requires compliance with the necessary respiratory protection, personal protective clothing and equipment, change areas and washing facilities, blood lead and zinc protoporphyrin monitoring, and employee training. The protection measures shall be modified, as necessary, after the exposure results are received.

4. Where initial monitoring indicates that lead exposures are below the Action Level, and where work activities and conditions remain the same as at the time of initial sampling, additional monitoring need not be repeated for that work activity.

5. Where the initial monitoring of a given work activity indicates that lead exposures are at or above the Action Level, additional exposure monitoring shall be conducted monthly. The monthly monitoring is more frequent than frequencies established in the lead standard which are at least every 6 months if above the Action Level, but below the PEL, or every 3 months if above the PEL.

6. All air samples shall be collected and analyzed according to NIOSH Method 7082, or equivalent. All samples shall be analyzed by laboratories accredited by the American Industrial Hygiene Association for metals analysis.

7. All exposed employees shall be notified in writing of the monitoring results within five (5) days after receiving the results.

8. The Action Level for airborne lead exposure is 30 $\mu g/m^3$, as an 8-hour time weighted average (TWA) concentration, without regard to the use of respirators. Whenever workers' airborne lead exposures exceed the Action Level, the Contractor shall implement the following:

   a. Periodic Exposure Monitoring
   b. Employee Information and Training

c. Employee Medical Surveillance and Medical Removal Protection
d. Housekeeping
e. Record keeping
f. Signs and Regulated Areas

9. The Permissible Exposure Limit (PEL) for airborne lead exposure is 50 $\mu g/m^3$, as an 8-hour TWA concentration. When the work area contains airborne lead levels above the PEL the Contractor shall implement the following in addition to those items listed in 3.02.B.8 of this section:

a. Compliance Program
b. Respiratory Protection
c. Protective Clothing and Equipment
d. Hygiene Facilities and Practices

C. Respiratory Protection: After feasible engineering controls and work practices have been implemented, respiratory protection shall be used to maintain employees' lead exposures below the PEL.

1. Respirators shall be worn by all employees, other Contractors, inspectors, or observers who enter regulated areas.

2. The Contractor shall develop a written Respiratory Protection Program in compliance with 29 CFR 1910.134, paragraphs (b), (d), (e), and (f), and the lead standard. The program shall address the selection, use, maintenance, and inspection of respirators, and qualifications for respirator users.

D. Protective Clothing and Equipment: The Contractor shall provide protective clothing and equipment and ensure they are worn by all employees whose lead exposures exceed the PEL, or who enter regulated areas.

1. Protective clothing shall include washable and/or disposable full body coveralls, gloves, foot coverings, and hoods. Other protective equipment shall include face shields, hard hats, eye protection, and hearing protection as appropriate.

2. Disposable protective clothing shall be used for no more than one work day. Such clothing may have to be disposed of as hazardous waste.

3. Reusable protective equipment shall be cleaned or replaced weekly if exposure levels are less than 200 $\mu g/m^3$, or daily if the exposure levels are greater than or equal to 200 $\mu g/m^3$.

4. Clothing shall not be removed or "cleaned" by any means which could reintroduce the lead dust into the ambient air. This includes brushing,

shaking, and blowing. Vacuums equipped with HEPA filters shall be used for this purpose.

5. Reusable coveralls shall be collected at the end of each work day in closed containers. The containers shall be labeled in accordance with the requirements of 29 CFR 1926.62(g)(2)(vii). Contaminated clothing shall be cleaned in accordance with all applicable Federal, State, or local regulations pertaining to lead-contaminated laundry and water discharge. Laundries shall be informed that the clothing contains lead. If the clothing is washed on site, the discharge water shall be filtered, containerized, and arrangements made with the local POTW or other approved means of proper disposal.

6. Protective clothing and equipment shall be removed in the contaminated section of the change area and shall not be worn into any clean areas.

7. The Contractor shall provide the necessary clothing and equipment for use by the Owner and its designated representatives.

E. Housekeeping: Accumulations of lead-containing dust and debris generated by work activities shall be removed and cleaned daily.

1. All persons doing the cleanup shall be trained in performing lead activities, respirator qualified, and participate in the medical surveillance program. Respirators and protective clothing shall be worn by all persons doing the cleanup.

2. Compressed air may be used for housekeeping if used within containment and in conjunction with a ventilation system designed to capture the dust. Otherwise, HEPA-filtered vacuum cleaners shall be employed.

3. All lead-containing dust and debris shall be collected in sealed containers. The waste shall be tested to determine whether it will be disposed of as hazardous waste.

F. Personal Hygiene Facilities and Practices

1. Clean change areas shall be provided when employees' lead exposures exceed the PEL. The change areas shall be equipped with storage facilities for street clothing and a separate area for the removal and storage of lead-contaminated clothing and equipment. They shall be designed and used so that contamination of street clothing does not occur. Employees shall not leave the project site wearing any clothing worn while performing lead activities. Airborne lead exposures in the change area shall be maintained below the Action Level.

2. Shower facilities shall be provided whenever employees' lead exposures exceed the PEL. Shower facilities shall comply with OSHA Sanitation Standard, 29 CFR 1929.51. All employees whose lead exposures exceed the PEL shall shower at the end of each work shift or before leaving the project area. The shower facilities shall be made available for use by the Owner and its representatives, such as inspectors or observers.

3. Arrangements shall be made with the local POTW for the proper disposal of the shower and wash water after filtration (e.g., through a three stage 100, 50, and 5 micron filtering system), ion exchange, or other approved treatment technology.

4. Clean lunch areas shall be provided for all employees whose lead exposures exceed the PEL. Employees shall remove or clean (by vacuuming) their protective clothing and wash their hands and face before entering the lunch area. Lead exposures in the lunch area shall be maintained as free as practicable from lead contamination.

5. An adequate number of clean lavatory and hand washing facilities shall be provided. These shall comply with the OSHA Sanitation Standard, 29 CFR 1929.51.

6. Eating, drinking, smoking, chewing of food or tobacco products, or the application of cosmetics shall not be permitted in any areas where the lead exposures exceed the PEL. Thorough washing of hands and face is required prior to undertaking any of these activities.

G. Medical Surveillance and Medical Removal Protection

1. All employees who are exposed to lead above the Action Level in a single day during this project shall be provided with initial and periodic medical examinations and blood lead tests as required by the lead standard. A final blood lead test shall be provided for each worker upon completion of the project, or at any time a worker's employment at the project ceases.

2. When blood lead levels over 50 µg/dl are encountered, the Contractor shall provide for the temporary removal of employees from lead exposure above the Action Level. The required medical surveillance and periodic blood lead tests shall be provided in strict accordance with the lead standard throughout the removal.

3. Employees who will be required to wear a respirator or who request one shall be provided with a respirator and the necessary medical examinations to determine their ability to wear a respirator.

4. All examinations shall be provided by the Contractor and shall be performed by or under the direct supervision of a licensed physician.

H. Employee Information and Training

1. The Contractor shall provide lead training for all employees who are exposed to lead above the Action Level for this project.

2. The content of lead training shall include, as a minimum, those items listed in the lead standard.

3. Training shall also include hazard communication in accordance with 29 CFR 1926.59.

4. The Contractor shall notify other employers at the project site of the nature of the lead exposure work, the need to remain out of exposure areas, the warning sign and labeling system in effect, and the potential need for them to take measures to protect their employees.

I. Signs and Regulated Areas

1. The Contractor shall establish a regulated area surrounding activities where lead exposures exceed the Action Level. This includes locations where lead-containing debris is handled or transferred to storage containers.

2. The regulated area shall be demarcated by ropes, tape, walls, or containment's with caution signs posted at all accessible sides. Signs shall contain the legend:

WARNING
LEAD WORK AREA
POISON
NO SMOKING OR EATING

3. The Contractor shall control access of persons into regulated areas. Access shall be limited to individuals with proper training and personal protective equipment, and medical surveillance testing.

4. All persons entering regulated areas shall wear protective clothing and respirators.

5. Eating, drinking, smoking, and chewing of food or tobacco products shall be prohibited in regulated areas and in any area where lead exposures exceed the Action Level.

J. Record keeping: All records relating to training, medical examinations, blood lead monitoring, and exposure monitoring shall be maintained by the Contractor as required by the lead standard. All records shall be available for review by the Owner or its representative upon request.

3.03 CERTIFIED INDUSTRIAL HYGIENIST (CIH)

A. The Contractor shall provide for the services of a Certified Industrial Hygienist (CIH) who must be certified by the American Board of Industrial Hygiene in comprehensive practice.

B. Duties of the CIH shall be as follows:

1. Conduct and/or verify training for contractor employees in accordance with 29 CFR 1926.62 (l).

2. Review and approve Contractor's Written Compliance Plan for conformance to 29 CFR 1926.62(e)(2)(ii) and this Specification.

3. Monitor and evaluate work weekly to assure conformance with the approved plan and that hazardous exposure is adequately controlled in accordance with worker safety and health requirements of these specifications

4. Provide monthly reports of work compliance with control requirements in regards to working in a lead environment.

C. Activities of the CIH shall include:

1. Meet with City to discuss details of Contractor's Written Compliance Plan for lead paint removal.

2. Ensure worker and area air monitoring, testing and reporting are conducted by or under the direction of the CIH.

3. Furnish a detailed worker and area air monitoring schedule coordinated with Contractor's proposed production schedule.

4. Directing, monitoring and inspecting lead paint removal work to ensure that the requirements of the Contract have been satisfied during the entire lead paint removal operation.

5. Report results of air monitoring samples to the Engineer, signed by the CIH within 48 hours after the air samples are taken.

6. The CIH shall review sampling data, collected on a day when lead paint

removal operations occur, to determine if conditions require any change in work methods. Removal work shall not continue until approval is given by the CIH.

7. The CIH shall verify in writing and submit monitoring data to verify that:

   a. Air borne lead levels at and beyond the lead control (regulated) area were and remained less than 30 mg/m^3 of air

   b. Contractor conformance to 29 CFR 1926.62 and Item 3.02, above

   c. There were no visible accumulations of lead contaminated paint, dust or debris on the work site. Adjacent areas that may have become contaminated were properly cleaned and inspected.

   d. The CIH shall verify that the work area and contractor's equipment have been adequately cleaned of lead contamination prior to demobilization from the work site.

3.04 DEMOBILIZATION

The Contractor shall not remove the lead control area, boundaries, warning signs, etc. prior to proper removal of all hazardous wastes, debris and materials from the site and the City's receipt and acceptance of the CIH's verification.

END OF SECTION

Section 01410

TPDES REQUIREMENTS

1.01 SECTION INCLUDES

A. Documentation to be prepared and signed by Contractor/Operator before conducting construction operations, in accordance with the Texas Pollutant Discharge Elimination System (TPDES) Construction General Permit Number TXR 150000 issued February 15, 2008 (the Construction General Permit).

B. Implementation, maintenance inspection, and termination of storm water pollution prevention control measures including, but not limited to, erosion and sediment controls, storm water management plans, waste collection and disposal, off-site vehicle tracking, and other appropriate practices shown on the Drawings or specified elsewhere in the Contract.

C. Review of the Storm Water Pollution Prevention Plan (SWP3) implementation in a meeting with Project Manager prior to start of construction.

1.02 DEFINITIONS

A. Commencement of Construction Activities: The exposure of soil resulting from activities such as clearing, grading, and excavation activities, as well as other construction related activities (e.g., stock piling of fill material, demolition).

B. Large Construction Activity: Project that:o

1. disturbs five acres or more, or

2. disturbs less than five acres but is part of a larger common plan of development that will disturb five acres or more of land.

C. Small Construction Activity: Project that:

1. disturbs one or more acres but less than five acres, or

2. disturbs less than one acre but is part of a larger common plan of development that will ultimately disturb one or more acres but less than five acres.

D. TPDES Operator:

Operator - The person or persons associated with a large or small construction activity that is either a primary or secondary as defined below:

Primary Operator – the person or persons associated with a large or small construction activity that meets either of the following two criteria:

(a) the persons have operational control over construction plans and specifications, including the ability to make modifications to those plans and specifications; or

(b) the person or persons have day-to-day operational control of those activities at a construction site that are necessary to ensure compliance with a storm water pollution prevention plan (SWP3) for the site or other permit conditions (e.g., they are authorized to direct workers at a site to carry out activities required by the SWP3 or comply with other permit conditions).

Secondary Operator – The person whose operational control is limited to the employment of other operators or to the ability to approve or disapprove changes to plans and specifications. A secondary operator is also defined as a primary operators if there are no other operators if there are no other operators at the construction site.

PART 2 P R O D U C T S - Not Used

PART 3 E X E C U T I O N

3.01 SITE SPECIFIC STORM WATER POLLUTION PREVENTION PLAN (SWP3)

A. Prepare a SWP3 following Part III of the Construction General Permit and the Storm Water Management Handbook for Construction Activities issued under City Ordinance Section 47-695(b). If conflicts exist between the Construction General Permit and the handbook, the more stringent requirements will apply.

B. Update or revise the SWP3 as needed during the construction following Part III, Section E of the Construction General Permit.

C. Submit the SWP3 and any updates or revisions to Project Manager for review and address comments prior to commencing, or continuing, construction activities.

3.02 NOTICE OF INTENT For Large Construction Activity

A. Fill out, sign, and date TCEQ Form 20022 (03/05/2008) Notice of Intent (NOI) for Storm Water Discharges Associated with Construction Activity under the TPDES Construction General Permit (TXR 150000), **ATTACHMENT 1** of this Section 01410.

B. Transmit the signed Contractor's copy of TCEQ Form 20022 (03/05/2008), along with a $325.00 check, made out to Texas Commission on Environmental Quality, and the completed Payment Submittal Form to Project Manager.

C. Project Manager will complete a separate TCEQ Form 20022 (03/05/2008) for City's Notice of Intent, and will submit both Notices, along with checks for application fees, to the TCEQ.

D. Submission of the Notice of Intent form by both the City and Contractor to TCEQ if mailing is required a minimum of seven days before Commencement of Construction Activities.

3.03 CONSTRUCTION SITE NOTICE FOR SMALL CONSTRUCTION ACTIVITY

A. Fill out, sign, and date the Construction Site Notice, Attachment 2 to TPDES General Permit TXR 150000, "Construction Site Notice", **ATTACHMENT 2** of this Section 01410.

B. Transmit the signed Construction Site Notice to Project Manager at least seven days prior to Commencement of Construction Activity.

3.04 CERTIFICATION REQUIREMENTS

A. Fill out TPDES Operator's Information form, **ATTACHMENT 3** of this Section 01410, including Contractor's name, address, and telephone number, and the names of persons or firms responsible for maintenance and inspection of erosion and sediment control measures. Use multiple copies as required to document full information.

B. Contractor and Subcontractors shall sign and date the Contractor's / Subcontractor's Certification for TPDES Permitting, **ATTACHMENT 4** of this Section 01410. Include this certification with other Project certification forms.

C. Submit properly completed certification forms to Project Manager for review before beginning construction operations.

D. Conduct inspections in accordance with TCEQ requirements. Ensure persons or firms responsible for maintenance and inspection of erosion and sediment control measures read, fill out, sign, and date the Erosion Control Contractor's Certification for Inspection and Maintenance. Use the City of Houston Storm Water Pollution Prevention Plan, Construction Site Inspection Report, **ATTACHMENT 5** of this Section 01410 to record maintenance inspections and repairs.

3.05 RETENTION OF RECORDS

A. Keep a copy of this document and the SWP3 in a readily accessible location at the construction site from Commencement of Construction Activity until submission of the Notice of Termination (NOT) for Storm Water Discharges Associated with Construction Activity under TPDES Construction General Permit (TXR 150000). Contractors with day-to-day operational control over SWP3 implementation shall have a copy of the SWP3 available at a central location, on-site, for the use of all operators and those identified as having responsibilities under the SWP3. Upon submission of the NOT, submit all required forms and a copy of the SWP3 with all revisions to Project Manager.

3.06 REQUIRED NOTICES

A. Post the following notices from effective date of the SWP3 until date of final site stabilization as defined in the Construction General Permit:

1. Post the TPDES permit number for Large Construction Activity, with a signed TCEQ Construction Site Notice for large or Small Construction Activity. Signed copies of the City's and Contractor's NOI must also be posted.

2. Post notices near the main entrance of the construction site in a prominent place where it is safely and readily available for viewing by General Public, Local, State, and Federal Authorities. Post name and telephone number of Contractor's local contact person, brief project description and location of the SWP3.

    a. If posting near a main entrance is not feasible due to safety concerns, coordinate posting of notice with Project Manager to conform to requirements of the Construction General Permit.

    b. If Project is a linear construction project (e.g.: road, utilities, etc.), post notice in a publicly accessible location near active construction. Move notice as necessary.

3. Post a notice to equipment and vehicles operators, instructing them to stop, check, and clean tires of debris and mud before driving onto traffic lanes. Post at each stabilized construction access area.

4. Post a notice of waste disposal procedures in a readily visible location on site.

3.07 ON-SITE WASTE MATERIAL STORAGE

A. On-site waste material storage shall be self-contained and shall satisfy appropriate local, state, and federal rules and regulations.

B. Prepare list of waste material to be stored on-site. Update list as necessary to include up-to-date information. Keep a copy of updated list with the SWP3.

C. Prepare description of controls to reduce pollutants generated from on-site storage. Include storage practices necessary to minimize exposure of materials to storm water, and spill prevention and response measures consistent with best management practices. Keep a copy of the description with the SWP3.

3.08 NOTICE OF TERMINATION

A. Submit a NOT, **ATTACHMENT 7** of this Section 01410, to Project Manager within 30 days after:

1. Final stabilization has been achieved on all portions of the site that are the responsibility of the Contractor; or

2. Another operator has assumed control over all areas of the site that have not been stabilized; and

3. All silt fences and other temporary erosion controls have either been removed, scheduled to be removed as defined in the SWP3, or transferred to a new operator if the new operator has sought permit coverage.

B. Project Manager will complete City's NOT and submit Contractor and City's notices to the TCEQ and MS4 entities.

END OF SECTION

PAGE LEFT INTENTIONALLY BLANK

ATTACHMENT 1

TCEQ

Notice of Intent (NOI) for Storm Water Discharges Associated with Construction Activity under the TPDES Construction General Permit (TXR150000)

For help completing this application, read the TXR150000 NOI Instructions (TCEQ-20022-Instructions)

TCEQ Office Use Only
TPDES Permit Number: TXR15 __|__|__ __| - NO
GIN Number: |_____|

A. Construction Site Operator ☐ New ☐ No Change Customer Reference Number: CN_____
Name: _____
Mailing Address: _____ City: _____ State: ____ Zip Code: _____
Country Mailing Information (*if outside USA*) Territory _____ Country Code: _____ Postal Code _____
Phone Number: _____ Extension: _____ Fax Number: _____
E-mail Address: _____
Type of Operator: ☐ Individual ☐ Sole Proprietorship - D.B.A. ☐ Partnership ☐ Corporation ☐ Federal Government
☐ State Government ☐ County Government ☐ City Government ☐ Other: _____
Independent Operator? ☐ Yes ☐ No Number of Employees: ☐ 0-20 ☐ 21-100 ☐ 101-250 ☐ 251-500 ☐ 501 or higher
Federal Tax ID: _____ State Franchise Tax ID Number _____ DUNS Number: _____

B. Billing Address
Name: _____
Mailing Address: _____ City: _____ State: ____ Zip Code: _____
Country Mailing Information (*if outside USA*) Territory: _____ Country Code: _____ Postal Code: _____

C. Project / Site Information ☐ New ☐ No Change Regulated Entity Reference Number: RN_____
Name: _____
Mailing Address: _____ City: _____ State: ____ Zip Code: _____
Physical Address: _____ City: _____ County: _____ Zip Code: _____
Location Access Description: _____
Latitude: ___ ° ___ ' ___ " N Longitude: ___ ° ___ ' ___ " W Degrees (°), Minutes (′), and Seconds (″)
Latitude: _____ Longitude: -_____ Decimal Form
Standard Industrial Classification (SIC) code: _____ Also, describe the construction activity at this site (*do not repeat the SIC code*):
_____
Has a storm water pollution prevention plan been prepared as specified in the general permit (TXR150000)? ☐ Yes ☐ No
Estimated area of land disturbed (to the nearest acre). _____ Is the project / site located on Indian Country Lands? ☐ Yes ☐ No
Does this project / site discharge storm water into a municipal separate storm sewer system (MS4)? ☐ Yes ☐ No
If yes, provide the name of the MS4 operator: _____
Provide the name or segment number of the water body that receives storm water from this project / site: _____

D. Contact - If the TCEQ needs additional information regarding this application, who should be contacted?
Name: _____ Title: _____
Phone Number: _____ Extension: _____ Fax Number: _____
E-mail Address: _____

E. Payment Information - Check / Money Order Number: _____ Name on Check / Money Order: _____

F. Certification
I certify under penalty of law that this document was prepared under my direction or supervision in accordance with a system designed to assure that qualified personnel properly gather and evaluate the information submitted. Based on my inquiry of the person or persons who manage the system, or those persons directly responsible for gathering the information, the information submitted is, to the best of my knowledge and belief, true, accurate, and complete. I am aware there are significant penalties for submitting false information, including the possibility of fine and imprisonment for knowing violations.
Construction Site Operator:
Prefix: _____ First: _____ Middle: _____
Last: _____ Suffix: _____ Title: _____
Signature: _____ Date: _____

If you have questions on how to fill out this form or about the storm water program, please contact us at (512) 239-4671.
Individuals are entitled to request and review their personal information that the agency gathers on its forms. They may also have any errors in their information corrected. To review such information, contact us at (512) 239-3282.

The completed NOI must be mailed to the following address. Use the attached document to submit the $100 application fee. Please note that the NOI and application fee are submitted separately to different addresses.

Texas Commission on Environmental Quality
Storm Water & General Permits Team; MC - 228
P.O. Box 13087
Austin, Texas 78711-3087

TCEQ-20022 (05/03) **Page 1 of 2**

ATTACHMENT 1

Texas Commission on Environmental Quality
Payment Submittal Form

The storm water application fee shall be sent under separate cover to the Texas Commission on Environmental Quality.

This form must be used to submit your Storm Water Application Fee. Please complete the following information, staple your check in the space provided at the bottom of this document, and mail it to:

BY REGULAR U.S. MAIL

Texas Commission on Environmental Quality
Financial Administration Division
Cashier's Office, MC-214
P.O. Box 13088
Austin, TX 78711-3088

BY OVERNIGHT/EXPRESS MAIL

Texas Commission on Environmental Quality
Financial Administration Division
Cashier's Office, MC-214
12100 Park 35 Circle
Austin, TX 78753

Fee Code: GPA

Storm Water General Permit: TXR150000

Check / Money Order No: _____

Amount of Check/Money Order: _____

Date of Check or Money Order: _____

Name on Check or Money Order: _____

Facility / Site Name _____

Facility / Site Physical Address: _____

City: _____

Zip Code: _____

Staple Check In This Space

ATTACHMENT 1

Completing the Notice of Intent for Storm Water Discharges Associated with Construction Activity under the TPDES Construction General Permit (TXR150000)

A. Construction Site Operator Information

Check boxes and Customer Reference Number
These boxes designate the operator's status as a TCEQ "customer"—in other words, an individual or business that is involved in an activity that we regulate. We assign each customer a number that begins with "CN," followed by nine digits. ***This is not a permit number, registration number, or license number.*** In the remainder of this section, we will use "this customer" to mean the operator for Part A of the form.

- If this customer has not been assigned a Customer Reference Number or if this number is unknown, check "New" and leave the space for the Customer Reference Number blank.
- If this customer has already been assigned this number, enter the operator's Customer Reference Number and:
  - Check "No Change" if all the remaining customer information is the same as previously reported. However, you must still complete most blanks in this form for this notice of intent to be valid.
  - If this customer's information has changed since the last time it was reported to the TCEQ, check neither box and complete the remainder of this notice of intent.
- ***Do not enter a permit number, registration number, or license number in place of the Customer Reference Number.***

Name
Enter the legal name of this customer as authorized to do business in Texas. Include any abbreviations (LLC, Inc., etc.).

Mailing Address
Enter a central and general mailing address for this customer to receive mail from the TCEQ. For example, if this customer is a large company, this address might be the corporate or regional headquarters. On the other hand, for a smaller business, this address could be the same as the site address.

If this is a street address, please follow US Postal Service standards. In brief, these standards require this information in this order:

- the "house" number—for example, the 1401 in 1401 Main St.
- if there is a direction before the street name, the one- or two-letter abbreviation of that direction (N, S, E, W, NE, SE, SW, or NW)
- the street name (if a numbered street, do not spell out the number—for example, 6th St, not Sixth St)
- an appropriate abbreviation of the type of street—for example, St, Ave, Blvd, Fwy, Exwy, Hwy, Cr, Ct, Ln
- if there is a direction after the street name, the one- or two-letter abbreviation of that direction (N, S, E, W, NE, SE, SW, or NW)
- if there is a room number, suite number, or company mail code

City, State, *and* ZIP Code
Enter the name of the city, the two-letter USPS abbreviation for the state (for example, TX), and the ZIP Code. (Enter the full ZIP+4 if you know it.)

Country Mailing Information
If this address is ***outside*** the United States, enter the territory name, country code, and any non-ZIP mailing codes or other non-U.S. Postal Service features here. If this address is ***inside*** the United States, leave these spaces blank.

Phone Number *and* Extension
This number should correspond to this customer's mailing address given earlier. Enter the area code and phone number here. Leave "Extension" blank if this customer's phone system lacks this feature.

Fax Number
This number should correspond to this customer's mailing address given earlier. Enter the area code and fax number here.

E-mail Address
As with the mailing address, this should be a general address that is appropriate for e-mail to this customer's central or regional headquarters, if applicable.

If "No Change" was checked for this customer, you may skip the rest of the fields in this part of the form and continue to the next part of the NOI.

Type of Operator
Check *only one* box.

Check ...	*if this customer*
Individual	is a person and has not established a business to do whatever causes them to be regulated by us.
Sole Proprietorship—D.B.A.	is a business that is owned by only one person and has not been incorporated. This business may: • be under the person's name • have its own name (doing business as "or d.b.a.") • have any number of employees
Partnership	is a business that is established as a partnership as defined by the Texas Secretary of State's Office
Corporation	meets all of these conditions • is a legally incorporated entity under the laws of any state or country • is recognized as a corporation by the Texas Secretary of State • has proper operating authority to operate in Texas
Federal, state, county, or city government (as appropriate)	is either an agency of one of these levels of government or the governmental body itself (If a utility district, water district, tribal government, college district, council of governments, or river authority, check "Other" and write in the specific type of government.)
Other	fits none of the above descriptions. Enter a short description of the type of customer in the blank provided.

Independent Operator?
Check "No" if this customer is a subsidiary or part of a larger company. Otherwise, check "Yes."

Number of Employees
Check one box to show the number of employees for this customer's entire company, at all locations. ***This is not necessarily the number of employees at the site named in this NOI.***

Federal Tax ID
All businesses, except for some small sole proprietors, should have a federal taxpayer identification number (TIN). Enter this number here. Use no prefixes, dashes, or hyphens. Individuals and sole proprietors do not need to provide a federal tax ID.

State Franchise Tax ID
Corporations and limited liability companies that operate in Texas are issued a franchise tax identification number. If this customer is a corporation or limited liability company, enter this number here.

DUNS Number
Most businesses have a DUNS (Data Universal Numbering System) number issued by Dun and Bradstreet Corp. If this customer has one, enter it here.

B. Billing Address

We will mail the annual fee invoice for this site to the address entered in this section.

Name
Enter the legal name of the person or business to which we should mail this site's fee invoice each year.

Mailing Address
Enter the specific mailing address to which we should mail this site's fee invoice each year. If this is a street address, please follow the US Postal Service standards as described under "A. Construction Site Operator Information" on page 1 of these instructions.

City, State, *and* ZIP Code
Enter the name of the city, the two-letter USPS abbreviation for the state (for example, TX), and the ZIP Code. (Enter the full ZIP+4 if you know it.)

Country Mailing Information
If this address is ***outside*** the United States, enter the territory name, country code, and any non-ZIP mailing codes or other non-U.S. Postal

ATTACHMENT 1

Service features here. If this address is ***inside*** the United States, leave these spaces blank.

C. Project / Site Information

Check boxes *and* Regulated Entity Reference Number
These boxes designate this site's status as a TCEQ "regulated entity"—in other words, a location where an activity that we regulate occurs. We assign each regulated entity a number that begins with "RN," followed by nine digits. ***This is not a permit number, registration number, or license number.***

- If this site has not been assigned a Regulated Entity Reference Number or if this number is unknown, check "New" and leave the space for the Regulated Entity Reference Number blank.
- If this site has already been assigned this number, enter the Regulated Entity Reference Number and:
  - Check "No Change" if all the remaining information is the same as previously reported. However, even if there has been no change, you must complete this section at least through "E-mail Address" for this NOI to be valid.
  - If this site's information has changed since the last time it was reported to the TCEQ, check neither box and complete the remainder of this notice of intent.
- ***Do not enter a permit number, registration number, or license number in place of the Regulated Entity Reference Number.***

Name
Enter the name by which you want this site to be known to the TCEQ.

Mailing Address
Enter the specific mailing address for this site. If this is a street address please follow the US Postal Service standards as described under "A. Construction Site Operator Information" on page 1 of these instructions. If the project / site's mailing address is the same as what is provided in Section A, you may enter "Same as Section A."

City, State, *and* ZIP Code
Enter the name of the city, the two-letter USPS abbreviation for the state (for example, TX), and the ZIP Code. (Enter the full ZIP+4 if you know it.)

Physical Address
Enter the physical address of the site itself. TCEQ staff should be able to use this address to find the site. Please follow the US Postal Service standards as described under "A. Construction Site Operator Information" on page 1 of these instructions. If the project / site does not have a physical address, enter "No Address."

City, County, *and* ZIP Code
Enter the name of the city, the county, and the ZIP Code. (Enter the full ZIP+4 if you know it.) This information must be provided even if you have entered "No Address" in the previous field.

Location Access Description
Enter a physical description of the location of the site based on highway intersections and/or permanent landmarks.

Latitude *and* Longitude
Enter the latitude and longitude of the site in ***either*** degrees, minutes, and seconds ***or*** decimal form.

For help obtaining the latitude and longitude, go to:
http://www.tnrcc.state.tx.us/gis/drgview.html

Standard Industrial Classification (SIC) Code and Activity Description

Provide the SIC code that best describes the construction activity being conducted at the site.

For help with SIC codes, go to:
http://www.osha.gov/oshstats/sicser.html

In addition to the SIC code, you must also provide a description of the construction activity being conducted at the site. This may include such descriptions as "Apartment Building Construction" or "Shopping Center Construction."

Storm Water Pollution Prevention Plan
This plan identifies the areas and activities that could produce contaminated runoff at your site and then tells how you will ensure that this contamination is mitigated. For example, in describing your mitigation measures, your site's plan might identify the devices that collect and filter storm water, tell how those devices are to be maintained, and tell how frequently that maintenance is to be carried out. ***You must develop this plan before you complete this NOI.*** This plan must be available for a TCEQ investigator to review on request. Specific requirements for the development of the plan can be found in the *Texas Pollutant Discharge Elimination System Construction General Permit (TXR150000)*.

Estimated Area of Land Disturbed
Provide the approximate number of acres that the construction site will disturb. It is appropriate to enter a value less than 5, only if the project is part of a larger common plan that disturbs five or more acres. If the acreage is less than 1, enter 1. "Disturb" means any clearing, grading, excavating, or other similar activities.

Is the site located on Indian Country Lands?
Check "Yes" only if the site is on a reservation or other areas designated by the federal government as Indian Country Lands. If not, check "No."

Destination of Storm Water Discharge
The storm water from your site eventually reaches a receiving water body such as a local stream or lake, possibly via a drainage ditch. The discharge may initially be into a municipal separate storm sewer system (MS4). Check the appropriate boxes for whether storm water is discharged into an MS4. If you checked "Yes" to "An MS4?", then enter the name of the entity that operates the storm sewer—often a city, town, or utility district, but possibly another form of government.

You must also provide the name of the water body that receives the discharge from the construction site (a local stream or lake). Storm water may be discharged directly to a receiving stream or via a storm sewer system. If known, please include the segment number if the discharge is to a classified water body.

For a map that includes segment numbers, go to:
http://www.tnrcc.state.tx.us/water/quality/data/index.html

D. Contact

Give all the relevant information for the person whom TCEQ can contact if there are questions about any of the information on this form—perhaps the same person who completed the form.

E. Payment Information

Provide the number and account holder name from the check or money order used to pay the $100 application fee.

F. Certification

The operator must sign and date this statement to validate this NOI. Be sure to enter the full legal name of the person signing the form and the relevant title—for example, "Operator," "Vice-President," or "Partner." Use the "Prefix" blank for such titles as Dr., Mr., or Ms., as desired. Use the "Suffix" blank for such designations as Ph.D., Jr., Sr., III, or J.D., if applicable.

For a corporation, the application shall be signed by a responsible corporate officer. A responsible corporate officer means a president, secretary, treasurer, or vice-president of the corporation in charge of a principal business function, or any other person who performs similar policy or decision-making functions for the corporation, or the manager of one or more manufacturing, production, or operating facilities employing more than 250 persons or having gross annual sales or expenditures exceeding $25 million (in second-quarter 1980 dollars), if authority to sign documents has been assigned or delegated to the manager in accordance with corporate procedures. Corporate procedures governing authority to sign permit applications may provide for assignment or delegation to applicable corporate positions rather than to specific individuals.

For a partnership or sole proprietorship, the application shall be signed by a general partner or the proprietor, respectively.

For a municipality, state, federal, or other public agency, the application shall be signed by either a principal executive officer or a ranking elected official. For purposes of this application, a principal executive officer of a federal agency includes the chief executive officer of the agency, or a senior executive officer having responsibility for the overall operations of a principal geographic unit of the agency (e.g., regional administrator of the United States Environmental Protection Agency).

Questions?

If you have questions about any of the information on this form, contact our Storm Water Program at 512/239-4671 or look for "Storm Water" on our Web site:
www.tceq.state.tx.us

ATTACHMENT 2

CONSTRUCTION SITE NOTICE

FOR THE
Texas Commission on Environmental Quality (TCEQ)
Storm Water Program

TPDES GENERAL PERMIT TXR150000

The following information is posted in compliance with **Part II.D.2.** of the TCEQ General Permit Number TXR150000 for discharges of storm water runoff from construction sites. Additional information regarding the TCEQ storm water permit program may be found on the internet at:
www.tnrcc.state.tx.us/permitting/waterperm/wwperm/tpdestorm

Contact Name and Phone Number:	
Project Description: (Physical address or description of the site's location, estimated start date and projected end date, or date that disturbed soils will be stabilized)	
Location of Storm Water Pollution Prevention Plan :	

For Construction Sites Authorized Under Part II.D.2. (Obtaining Authorization to Discharge) the following certification must be completed:

I _____ (Typed or Printed Name Person Completing This Certification) certify under penalty of law that I have read and understand the eligibility requirements for claiming an authorization under Part II.D.2. of TPDES General Permit TXR150000 and agree to comply with the terms of this permit. A storm water pollution prevention plan has been developed and implemented according to permit requirements. A copy of this signed notice is supplied to the operator of the MS4 if discharges enter an MS4 system. I am aware there are significant penalties for providing false information or for conducting unauthorized discharges, including the possibility of fine and imprisonment for knowing violations.

_____ _____
Signature and Title Date

PAGE LEFT INTENTIONALLY BLANK

ATTACHMENT 3

TPDES OPERATOR'S INFORMATION

Owner's Name and Address: City of Houston

Mr. _____
(City Official)

_____
(Department)
P. O. Box 1562
Houston, Texas 77251-1562
(713) 247-1000

Contractors' Names and Addresses:

General Contractor: _____
_____
_____
_____
Telephone: _____

Site Superintendent: _____
_____
_____
_____
Telephone: _____

Erosion Control and
Maintenance Inspection: _____
_____
_____
_____
Telephone: _____

Subcontractors' Names and Addresses:

_____ _____
_____ _____
_____ _____
_____ _____
Phone: _____ Phone: _____

Note: Insert name, address, and telephone number of person or firms

PAGE LEFT INTENTIONALLY BLANK

ATTACHMENT 4

CONTRACTOR'S / SUBCONTRACTOR'S

CERTIFICATION FOR TPDES PERMITTING

I certify under penalty of law that I understand the terms and conditions of TPDES General Permit No. TXR150000 and the Storm Water Pollution Prevention Plan for the construction site identified as part of this certification.

Signature: _____

Name: (printed or typed) _____

Title: _____

Company: _____

Address: _____

Date: _____

Signature: _____

Name: (printed or typed) _____

Title: _____

Company: _____

Address: _____

Date: _____

Signature: _____

Name: (printed or typed) _____

Title: _____

Company: _____

Address: _____

Date: _____

PAGE LEFT INTENTIONALLY BLANK

ATTACHMENT 5

EPA NPDES Construction Inspection Form

The following inspection is being performed in compliance with Part IV.D.4. of the NPDES Region 6 Storm Water Construction General Permit [63 Fed. Reg. 36502] and being retained in accordance with Part V of the Permit. Qualified personnel (provided by the permittee or cooperatively by multiple permittees) shall inspect disturbed areas of the construction site that have not been finally stabilized, areas used for storage of materials that are exposed to precipitation, placement and effectiveness of structural control measures, and locations where vehicles enter or exit the site. Inspections shall be performed at least once every 14 days and within 24 hours of the end of a storm event of 0.5 inches or greater. Where sites have been temporarily stabilized, runoff is unlikely due to winter conditions, or during seasonal arid periods in arid areas (0-10 inches of rainfall annually) and semi-arid areas (10-20 inches annually) such inspections shall be conducted at least once every month. This form is primarily intended for use with construction projects in Texas and New Mexico. Permittees on Indian Country lands in Oklahoma, Louisiana and Arkansas and some oil and gas facilities in Oklahoma may use this form if they are eligible for this permit. Other facilities need to check with their NPDES authority before using this form.

If you do not know your NPDES Permit Number, contact the NOI Processing Center at (301)495-4145. This form was prepared as an example and it is not a required form for use with the permit. Alternative forms may be used if they contain all of the required information as set forth in the permit. This form and additional information regarding the NPDES Region 6 storm water program may be found on the Internet at http://www.epa.gov/region6/sw/. Any person with a complaint about the operation of this facility in regards to this permit should contact EPA Region 6 at (214)665-7112.

Permit Number(s) covered by this inspection (e.g. owners, developers, general contractor, builders)	
Signature and Certification in accordance with Part VI.G of the permit:	I certify under penalty of law that this document and all attachments were prepared under my direction or supervision in accordance with a system designed to assure that qualified personnel properly gathered and evaluated the information submitted. Based on my inquiry of the person or persons who manage the system, or those persons directly responsible for gathering the information, the information submitted is, to the best of my knowledge and belief, true, accurate, and complete. I am aware that there are significant penalties for submitting false information, including the possibility of fine and imprisonment for knowing violations. Signature_____Date_____
Date of Inspection	
Inspector Name	
Is there a copy of the permit language with the SWPPP?	❒ YES ❒ NO
Is the inspector qualified and are the qualifications documented in the SWPPP?	❒ YES ❒ NO
Is an NPDES storm water construction sign posted at the entrance for all permittees?	❒ YES ❒ NO

You may want to use EPA Region 6 construction checklist to assure components of the SWPPP are complete. This form, the construction sign, and the checklist are available on the Region 6 NPDES Storm Water Forms and Documents web page which may be found on the internet at http://www.epa.gov/earth1r6/6en/w/formsw.htm. In addition to the checklist, you should provide a narrative (see next page) on the existing Best Management Practices and Structural Controls found during each inspection. Any problems identified in an inspection should be corrected within 7 days. The inspection should cover all components of the SWPPP and all potential pollutants. While eroded soil is the primary pollutant of concern, do not forget to inspect for other pollutant sources such as fuel tanks, paints, solvents, stabilization materials, concrete hardner, batch plants, and construction debris. The inspector will need to update the SWPPP to reflect findings of the inspection. The site map should be updated after an inspection to show controls that have been added or removed, to ensure the site map is kept current in accordance with Part IV.C. of the permit.

Revision 4, March 1, 2000

ATTACHMENT 5

Narrative Findings of the inspection:

Observations should include any findings of Best Management Practices or controls that are not in accordance with the SWPPP. If a control is not in place or failed, observe the reason why. A control removed temporarily for work is not necessarily a violation if properly recorded in the SWPPP. If it has been removed, record why it was removed and, if applicable, when it will be reinstalled. If the control has failed, observe the conditions so a conclusion may be made as to wether the control failed for improper maintenance or improper design. The qualified inspector will know when a failed control is inadequate and should be replaced by an improved control mechanism. Qualified inspectors are to have authority to make changes to the SWPPP to assure compliance. Controls that have not been installed should be given a reason why they are not installed and/or a scheduled date for installation if they are designed for a later phase of construction. After the inspection, the SWPPP and its site map should be updated to reflect current conditions of controls and Best Management Practices at the time of the inspection. This includes removing uninstalled controls from the site map or otherwise denoting on the site map if they are no longer installed if the controls have been removed because they are no longer necessary (e.g. stabilization has been achieved in that area).

ATTACHMENT 6

City of Houston

Storm Water Pollution Prevention Plan
Construction Site Inspection Report

TPDES/EPA Permit Number _____

COH Storm Water Quality Permit Number _____

DATE _____

No exceptions noted.

The following must be corrected prior to continuing work:

Public Notice improperly posted

Initial Construction Site Inspection Report information requires updating

Copy of NOI not on site

Storm water pollution prevention plan not on site

Erosion and sediment controls improperly installed

Erosion and sediment control devices improperly maintained

Fueling or washout areas not properly protected

Portocan or other sanitary facilities not properly protected

Self-inspection and maintenance records incomplete

Sediment from site outside area of construction

Other (see description below)

_____

_____

Please contact the Storm Water Quality Engineer at
611 Walker, RA-257, Houston TX 77002
713-837-7383 fax 713-837-0570

Once the above items have been corrected, call to arrange for reinspection. No further inspections for any construction related activity shall be made until the above items have been corrected.

Inspector's Signature	Contractor's Signature
Inspector's Name	Contractor's Name

not present

Distribution Stormwater Quality Engineer, Code Enforcement, Inspector, Operator
(Operator is Contractor)

Form _____ (10-01-01)

PAGE LEFT INTENTIONALLY BLANK

ATTACHMENT 7

TCEQ

Notice of Termination (NOT) for Storm Water Discharges Associated with Construction Activity under the TPDES Construction General Permit (TXR150000)

TCEQ Office Use Only
TPDES Permit Number: TXR15 _|_|_|_| - NO
GIN Number: _|_ _|_ _|_|_|

For help completing this application, read the TXR150000 NOI Instructions (TCEQ-20023-Instructions).

A. TPDES Permit Number: TXR15_____

B. Construction Site Operator Customer Reference Number: CN_____
Name:_____
Mailing Address:_____
City:_____ State:_____ Zip Code:_____
Country Mailing Information (*if outside USA*) Territory:_____ Country Code:_____ Postal Code:_____
Phone Number:_____ Extension:_____ Fax Number:_____
E-mail Address:_____

C. Project / Site Information Regulated Entity Reference Number RN_____
Name:_____
Physical Address:_____
Location Access Description:_____
City:_____ County:_____ Zip Code:_____

D. Contact - If the TCEQ needs additional information regarding this termination, who should be contacted?
Name:_____ Title:_____
Phone Number:_____ Extension:_____ Fax Number:_____
E-mail Address:_____

E. Certification
I certify under penalty of law that authorization under the TPDES Construction General Permit (TXR150000) is no longer necessary based on the provisions of the general permit. I understand that by submitting this Notice of Termination, I am no longer authorized to discharge storm water associated with construction activity under the general permit TXR150000, and that discharging pollutants in storm water associated with construction activity to waters of the U.S. is unlawful under the Clean Water Act where the discharge is not authorized by a TPDES permit. I also understand that the submittal of this Notice of Termination does not release an operator from liability for any violations of this permit or the Clean Water Act.

Construction Site Operator Representative:

Prefix:_____ First:_____ Middle:_____
Last:_____ Suffix:_____
Title:_____

Signature:_____ Date:_____

If you have questions on how to fill out this form or about the storm water program, please contact us at (512) 239-4671. Individuals are entitled to request and review their personal information that the agency gathers on its forms. They may also have any errors in their information corrected. To review such information, contact us at (512) 239-3282.

The completed NOT must be mailed to the following address:

Texas Commission on Environmental Quality
Storm Water & General Permits Team; MC - 228
P.O. Box 13087
Austin, Texas 78711-3087

TCEQ - 20023 (02/03) **Page 1 of 1**

PAGE LEFT INTENTIONALLY BLANK

ATTACHMENT 7

Completing the Notice of Termination for Storm Water Discharges Associated with Construction Activity under the TPDES Construction General Permit (TXR150000)

Who May File a Notice of Termination (NOT) Form
Permittees disturbing 5 acres or more (or part of a larger common plan of development or sale disturbing 5 acres or more) who are presently covered under the Texas Pollutant Discharge Elimination System (TPDES) Construction General Permit must submit a Notice of Termination (NOT) when final stabilization has been achieved on all portions of the site that is the responsibility of the permittee; or another permitted operator has assumed control over all areas of the site that have not been finally stabilized and all silt fences and other temporary erosion controls have either been removed, scheduled for removal as defined in the SWP3, or transferred to a new operator if the new operator has sought permit coverage. Erosion controls that are designed to remain in place for an indefinite period, such as mulches and fiber mats, are not required to be removed or scheduled for removal.

Final Stabilization occurs when either of the following conditions are met:

(a) All soil disturbing activities at the site have been completed and a uniform (e.g, evenly distributed, without large bare areas) perennial vegetative cover with a density of 70% of the native background vegetative cover for the area has been established on all unpaved areas and areas not covered by permanent structures, or equivalent permanent stabilization measures (such as the use of riprap, gabions, or goetextiles) have been employed.

(b) For individual lots in a residential construction site by either:

(1) the homebuilder completing final stabilization as specified in condition (a) above; or

(2) the homebuilder establishing temporary stabilization for an individual lot prior to the time of transfer of the ownership of the home to the buyer and after informing the homeowner of the need for, and benefits of, final stabilization.

(c) For construction activities on land used for agricultural purposes (e.g. pipelines across crop or range land), final stabilization may be accomplished by returning the disturbed land to its preconstruction agricultural use. Areas disturbed that were not previously used for agricultural activities, such as buffer strips immediately adjacent to a surface water and areas which are not being returned to their preconstruction agricultural use must meet the final stabilization conditions of condition (a) above.

A. TPDES Permit Number
Provide the TPDES permit number assigned to the operator of the construction site.

B. Construction Site Operator Information
Customer Reference Number
This number designates the operator's status as a TCEQ "customer"—in other words, an individual or business that is involved in an activity that we regulate. We assign each customer a number that begins with "CN," followed by nine digits. ***This is not a permit number, registration number, or license number.*** In the remainder of this section, we will use "this customer" to mean the operator for Part B of the form.

- If this customer has not been assigned a Customer Reference Number, leave the space for the Customer Reference Number blank.
- If this customer has already been assigned this number, enter the operator's Customer Reference Number.
- ***Do not enter a permit number, registration number, or license number in place of the Customer Reference Number.***

Name
Enter the legal name of this customer as authorized to do business in Texas. Include any abbreviations (LLC, Inc., etc.).

Mailing Address
Enter a central and general mailing address for this customer to receive mail from the TCEQ. For example, if this customer is a large company, this address might be the corporate or regional headquarters. On the other hand, for a smaller business, this address could be the same as the site address.

If this is a street address, please follow US Postal Service standards. In brief, these standards require this information in this order:

- the "house" number—for example, the 1401 in 1401 Main St
- if there is a direction before the street name, the one- or two-letter abbreviation of that direction (N, S, E, W, NE, SE, SW, or NW)
- the street name (if a numbered street, do not spell out the number—for example, 6th St, not Sixth St)
- an appropriate abbreviation of the type of street—for example, St, Ave, Blvd, Fwy, Exwy, Hwy, Cr, Ct, Ln
- if there is a direction after the street name, the one- or two-letter abbreviation of that direction (N, S, E, W, NE, SE, SW, or NW)
- if there is a room number, suite number, or company mail code

City, State, *and* ZIP Code
Enter the name of the city, the two-letter USPS abbreviation for the state (for example, TX), and the ZIP Code. (Enter the full ZIP+4 if you know it.)

ATTACHMENT 7

Country Mailing Information
If this address is ***outside*** the United States, enter the territory name, country code, and any non-ZIP mailing codes or other non–U.S. Postal Service features here. If this address is ***inside*** the United States, leave these spaces blank.

Phone Number *and* Extension
This number should correspond to this customer's mailing address given earlier. Enter the area code and phone number here. Leave "Extension" blank if this customer's phone system lacks this feature.

Fax Number
This number should correspond to this customer's mailing address given earlier. Enter the area code and fax number here.

E-mail Address
As with the mailing address, this should be a general address that is appropriate for e-mail to this customer's central or regional headquarters, if applicable.

C. Project / Site Information

Regulated Entity Reference Number
This number designates this site's status as a TCEQ "regulated entity"—in other words, a location where an activity that we regulate occurs. We assign each regulated entity a number that begins with "RN," followed by nine digits. ***This is not a permit number, registration number, or license number.***

- If this site has not been assigned a Regulated Entity Reference Number, leave the space for the Regulated Entity Reference Number blank.
- If this site has already been assigned this number, enter the Regulated Entity Reference Number.
- ***Do not enter a permit number, registration number, or license number in place of the Regulated Entity Reference Number.***

Name
Enter the name by which you want this site to be known to the TCEQ.

Physical Address
Enter the physical address of the site itself. TCEQ staff should be able to use this address to find the site.

Location Description
Enter a physical description of the location of the site based on highway intersections and/or permanent landmarks.

City, County, *and* ZIP Code
Enter the name of the city, the county, and the ZIP Code. (Enter the full ZIP+4 if you know it.)

D. Contact

Give all the relevant information for the person whom TCEQ can contact if there are questions about any of the information on this form—perhaps the same person who completed the form.

E. Certification

The operator must sign and date this statement to validate this NOI. Be sure to enter the full legal name of the person signing the form and the relevant title—for example, "Operator," "Operator's attorney," or "Senior Site Manager." Use the "Prefix" blank for such titles as Dr., Mr., or Ms., as desired. Use the "Suffix" blank for such designations as Ph.D., Jr., Sr., III, or J.D., if applicable.

For a corporation, the application shall be signed by a responsible corporate officer. A responsible corporate officer means a president, secretary, treasurer, or vice-president of the corporation in charge of a principal business function, or any other person who performs similar policy or decision-making functions for the corporation; or the manager of one or more manufacturing, production, or operating facilities employing more than 250 persons or having gross annual sales or expenditures exceeding $25 million (in second-quarter 1980 dollars), if authority to sign documents has been assigned or delegated to the manager in accordance with corporate procedures. Corporate procedures governing authority to sign permit applications may provide for assignment or delegation to applicable corporate positions rather than to specific individuals.

For a partnership or sole proprietorship, the application shall be signed by a general partner or the proprietor, respectively.

For a municipality, state, federal, or other public agency, the application shall be signed by either a principal executive officer or a ranking elected official. For purposes of this application, a principal executive officer of a federal agency includes the chief executive officer of the agency, or a senior executive officer having responsibility for the overall operations of a principal geographic unit of the agency (e.g. regional administrator of the United States Environmental Protection Agency)

Questions?

If you have questions about any of the information on this form, contact our Storm Water Program at 512/239-4671 or look for "Storm Water" on our Web site:

www.tceq.state.tx.us

Section 01422

REFERENCE STANDARDS

PART 1 G E N E R A L

1.01 SECTION INCLUDES

A. Section includes general quality assurance as related to Reference Standards and a list of references.

1.02 QUALITY ASSURANCE

A. For Products or workmanship specified by association, trade, or Federal Standards, comply with requirements of the standard, except when more rigid requirements are specified or are required by applicable codes.

B. Conform to reference standard by date of issue current on the date as stated in the General Conditions.

C. Request clarification from Project Manager before proceeding should specified reference standards conflict with Contract documents.

1.03 SCHEDULE OF REFERENCES

AASHTO	American Association of State Highway and Transportation Officials 444 North Capitol Street, N.W. Washington, DC 20001
ACI	American Concrete Institute P.O. Box 9094 Farmington Hills, MI 48333-9094
AGC	Associated General Contractors of America 333 John Carlyle Street Alexandria, VA 22314
AI	Asphalt Institute Research Park Drive P.O. Box 14052 Lexington, KY 40512

AITC	American Institute of Timber Construction 7012 S. Revere Parkway, Suite 140 Englewood, CO 80112
AISC	American Institute of Steel Construction One East Wacker Dr. Chicago, IL 60601
AISI	American Iron and Steel Institute 1101 17th Street NW, Suite 1300 Washington, DC 20036
ASME	American Society of Mechanical Engineers Three Park Avenue New York, NY 10016
ANSI	American National Standards Institute 1819 L Street NW Sixth Floor Washington, D.C. 20036
APA	American Plywood Association Box 11700 Tacoma, WA 98411
API	American Petroleum Institute 1220 L Street, N.W. Washington, DC 20005
AREA	American Railway Engineering and Maintenance-of-Way-Association 8201 Corporate Drive, Suite 1125 Landover, Maryland 20785
ASTM	American Society for Testing and Materials 100 Barr Harbor Drive West Conshohocken, PA 19428
AWPA	American Wood-Preservers' Association P.O. Box 5690 Granbury, TX 76049
AWS	American Welding Society 550 NW 42nd Avenue Miami, FL 33126

AWWA	American Water Works Association 6666 West Quincy Avenue Denver, CO 80235
COH	City of Houston P.O. Box 1562 Houston, TX 77251-1562
CLFMI	Chain Link Fence Manufacturers Institute 9891 Broken Land Parkway, Suite 300 Columbia, MD 21046
CRSI	Concrete Reinforcing Steel Institute 933 Plum Grove Road Schaumburg, IL 60173-4758
EJMA	Expansion Joint Manufacturers Association 25 North Broadway Tarrytown, NY 10591
FS	Federal Standardization Documents General Services Administration Specifications Unit (WFSIS) 7th and D Streets, S.W. Washington, DC 20406
ICEA	Insulated Cable Engineer Association P.O. Box 440 S. Yarmouth, MA 02664
IEEE	Institute of Electrical and Electronics Engineers 445 Hoes Lane P.O. Box 440 Piscataway, NJ 08855-459
ISA	International Society of Arboriculture P.O. Box 3129 Champaign, IL 61826-3129
MIL	Military Specifications General Services Administration Specifications Unit (WFSIS) 7th and D Streets, S.W. Washington, DC 20406

NACE	National Association of Corrosion Engineers 1440 South Creek Drive Houston, TX 77084-4906
NEMA	National Electrical Manufacturers' Association 1300 North 17th Street, Suite 1847 Rosslyn, VA 22209
NFPA	National Fire Protection Association 1 Batterymarch Park P.O. Box 9101 Quincy, MA 02269-9101
OSHA	Occupational Safety Health Administration U.S. Department of Labor Office of Public Affairs – Room N3647 Washington, DC 20210
PCA	Portland Cement Association 5420 Old Orchard Road Skokie, IL 60077-1083
PCI	Prestressed Concrete Institute 209 W. Jackson Blvd. Chicago, IL 60606
SDI	Steel Deck Institute P.O. Box 25 Fox River Grove, IL 60021
SSPC	Society for Protective Coatings (Steel Structures Painting Council) 40 24th Street, Sixth Floor Pittsburgh, PA 15222
TAC	Texas Administrative Code Texas Water Resources Conservation Commission P. O. Box 13087 Library MC-196 Austin, TX 78711-3087
TxDOT	Texas Department of Transportation 125 East 11th Street Austin, TX 78701-2483

UL	Underwriters' Laboratories, Inc. 333 Pfingston Road Northbrook, IL 60062
UNI-BELL	UNI-BELL Pipe Association 2655 Villa Creek Drive, Suite 155 Dallas, TX 75234

PART 2 P R O D U C T S - Not Used

PART 3 E X E C U T I O N - Not Used

END OF SECTION

Section 01450

CONTRACTOR'S QUALITY CONTROL

PART 1 G E N E R A L

1.01 SECTION INCLUDES

A. Quality assurance and control of Installation and manufacturers' field services and reports.

1.02 QUALITY ASSURANCE AND CONTROL OF INSTALLATION

A. Monitor quality control over Suppliers, manufacturers, Products, services, site conditions and workmanship, to produce work of specified quality at no additional cost to the City.

B. Comply fully with manufacturers' Installation instructions, including each step in sequence.

C. Request clarification from Project Manager before proceeding when manufacturers' instructions conflict with the Contract.

D. Comply with specified standards as minimum requirements for the Work except when more stringent tolerances, codes, or specified requirements indicate higher standards or more precise workmanship.

E. Perform the Work by persons qualified to produce a specified level of workmanship.

1.03 REFERENCES

A. Obtain copies of standards and maintain at job site when required by individual Specification sections.

1.04 MANUFACTURERS' FIELD SERVICES AND REPORTS

A. When specified in individual Specification sections, or as required by Project Manager, provide Product suppliers' or manufacturers' technical representative to observe site conditions, conditions of surfaces and Installation, quality of workmanship, start-up of equipment, operator training, testing, adjusting and balancing of equipment as applicable and to initiate required operation. Conform to minimum time requirements for start-up operations and operator training when provided in Specification sections.

B. At Project Manager's request, submit qualifications of manufacturers' representative to Project Manager 15 days in advance of required representatives' services. Representative is subject to approval by Project Manager.

C. Manufacturer's representatives shall report observations and site decisions or instructions given to applicators or installers that are supplemental or contrary to a manufacturer's written instructions. Submit report within 14 days of observation to Project Manager for review.

PART 2 P R O D U C T S - Not Used

PART 3 E X E C U T I O N - Not Used

END OF SECTION

Section 01452

INSPECTION SERVICES

PART 1 G E N E R A L

1.01 SECTION INCLUDES

A. Inspection services and references

1.02 INSPECTION

A. City Engineer will appoint an Inspector to represent the City and perform inspections, tests, and other services specified in individual Specification sections.

B. City Engineer may also appoint, employ, and pay an independent firm to provide additional inspection or construction management services as indicated in Section 01454 - Testing Laboratory Services.

C. The independent firm will submit reports to Project Manager, indicating observations and results of tests and indicating compliance or noncompliance with Contract requirements.

D. Contractor shall assist and cooperate with the Inspector; furnish samples of materials, design mix, equipment, tools, and storage.

E. Contractor shall notify Project Manager 24 hours prior to expected time for operations requiring services.

F. Contractor shall sign and acknowledge reports for Inspector.

PART 2 P R O D U C T S - Not Used

PART 3 E X E C U T I O N - Not Used

END OF SECTION

Section 01454

TESTING LABORATORY SERVICES

PART 1 G E N E R A L

1.01 SECTION INCLUDES

A. Testing laboratory services and Contractor responsibilities related to those services.

1.02 REFERENCES

A. ASTM C 1077 - Standard Practice for Laboratories Testing Concrete and Concrete Aggregates for Use in Construction and Criteria for Laboratory Evaluation.

B. ASTM D 3666 - Standard Specification for Minimum Requirements for Agencies Testing and Inspecting Bituminous Paving Materials.

C. ASTM D 3740 - Standard Practice for Minimum Requirements for Agencies Engaged in the Testing and/or Inspection of Soil and Rock as Used in Engineering Design and Construction.

D. ASTM E 329 - Standard Specification for Minimum Requirements for Agencies Engaged in the Testing and/or Inspection of Materials Used in Construction.

E. ISO/TEC Guide 25 - General Requirements for the Competence of Calibration and Testing Laboratories.

1.03 SELECTION AND PAYMENT

A. The City will select, employ, and pay for services of an independent testing laboratory to perform inspection and testing identified in Part 3 of individual Specification sections.

B. Contractor shall employ and pay for services of an independent testing laboratory or laboratories to perform inspection and testing identified in Part 2 of individual Specification sections.

C. Employment of a testing laboratory by the City shall not relieve Contractor of its obligation to perform work in accordance with requirements of Contract documents.

D. The City will deduct a minimum two-hour charge for testing laboratory time from periodic progress payment when operations requiring testing or inspection are canceled without prior notification.

E. The City will deduct cost of retesting from periodic progress payment whenever failed work is removed, replaced and retested.

1.04 QUALIFICATION OF LABORATORY

A. Meet laboratory requirements of ASTM E 329 and applicable requirements of ASTM C 1077, ASTM D 3666, and ASTM D 3740.

B. Meet ISO/TEC Guide 17025 conditions for accreditation by the American Association for Laboratory Accreditation (A2LA) in specific fields of testing required in individual Specification sections.

C. If laboratory subcontracts are part of the testing services, such work will be placed with a laboratory complying with the requirements of this Section.

1.05 LABORATORY REPORTS

A. Testing laboratory shall provide and distribute copies of laboratory reports to the distribution list Project Manager provides at the pre-construction conference.

B. Keep one copy of each laboratory report distributed or faxed at the site field office for duration of the Work.

C. Laboratory will fax material supplier, Contractor and Project Manager_reports that indicate failing test results by no later than close of business on the working day following test completion and review.

1.06 LIMITS ON TESTING LABORATORY AUTHORITY

A. Laboratory may not release, revoke, alter, or enlarge requirements of the Contract.

B. Laboratory may not approve or accept any portion of the Work.

C. Laboratory may not assume Contractor duties.

D. Laboratory has no authority to stop the Work.

1.07 CONTRACTOR RESPONSIBILITIES

A. Provide safe access to the Work and to manufacturer's facilities for Project Manager and for testing laboratory personnel.

B. Provide testing laboratory with a copy of the Construction Schedule and a copy of each update to Construction Schedule.

C. Notify Project Manager and testing laboratory during normal working hours of the day previous to expected time for operations requiring inspection and testing services. When Contractor fails to make timely prior notification, do not proceed with the operations requiring inspection and testing services.

D. Notify Design Consultant 24 hours in advance when Specification requires presence of Design Consultant for sampling or testing.

E. Request and monitor testing as required to provide timely results and to avoid delays to the Work. Provide samples to laboratory in sufficient time to allow required test to be performed in accordance with specified test methods before intended use of the Product.

F. Cooperate with laboratory personnel in collecting samples on site. Provide incidental labor and facilities for safe access to the Work to be tested, to obtain and handle samples at site or at source of Products to be tested, and to facilitate tests and inspections including storage and curing of test samples.

G. Make arrangements with laboratory through Project Manager. Payment for additional testing will be made in accordance with Document 00700 - General Conditions:

1. Re-testing required for failed tests.

2. Re-testing for nonconforming work.

3. Additional sampling and tests requested beyond specified requirements.

4. Insufficient notification of cancellation of tests for work scheduled but not performed.

PART 2 P R O D U C T S - Not Used

PART 3 EXECUTION

3.01 CONDUCTING TESTING

A Conform to laboratory sampling and testing methods specified in individual Specification sections to the latest issues of ASTM standards, TxDOT methods, or other recognized test standards as approved by Project Manager.

B Requirements of this Section shall also apply to those tests for approval of materials, for mix designs, and for quality control of materials as performed by employed testing laboratories.

END OF SECTION

Section 01502

MOBILIZATION

PART 1 GENERAL

1.01 SECTION INCLUDES

A. Mobilization of construction equipment and facilities onto the site.

1.02 MEASUREMENT AND PAYMENT

A. Unit Price Contracts. If Contract is Unit Price Contract, measurement for mobilization is on a lump sum basis.

B. Stipulated Price (Lump Sum) Contract. If Contract is Stipulated Price Contract, payment for Work in this Section is included in total Stipulated Price.

C. Mobilization payments will be included in monthly payment estimates upon written application by Contractor subject to the following provisions:

1. Authorization for payment of 50 percent of that portion of Contract Price designated for mobilization will be made upon receipt and approval by Project Manager of the following items, as applicable:

a. Safety Program (Document 00700, Paragraph 10.1.1).

b. Site Utilization Plan (Section 01145).

c. Schedule of Values (Section 01292), if any.

d. Initial Construction Photographs (Section 01321), if needed.

e. Preliminary Construction Schedule and Billing Forecast (Section 01325).

f. Construction Schedule (Section 01325 or Section 01326, as applicable).

g. Submittal Schedule (Section 01330).

h. Site specific Storm Water Pollution Prevention Plan (SWPPP) and Notice of Intent (NOI) along with storm water application fee (Section 01410), if required.

i. Contractor's Quality Control Plan (Section 01450), if required.

j. Establishment of a Field Office for Project Manager meeting requirements of Section 01520 - Temporary Field Office.

k. Traffic Control Plan (Section 01555), if required.

l. Plan for Control of Ground and Surface Water (Section 01578), if required.

m. Project Signs Submittal (Section 01580).

n. Trench Safety Program (Section 02260), if required.

o. Dewatering plan, when required.

2. Authorization for payment of the balance of that portion of Contract Price designated for mobilization will be made upon completion of the Work amounting to five percent of Original Contract Price. The amount of Contract Price designated for mobilization may not be applied in computing whether or not five percent of the Original Contract Price has been obtained.

3. Mobilization payments will be subject to retainage amounts stipulated in Document 00700 – General Conditions.

PART 2 P R O D U C T S -Not Used

PART 3 E X E C U T I O N -Not Used

END OF SECTION

Section 01504

TEMPORARY FACILITIES AND CONTROLS

PART 1 GENERAL

1.01 SECTION INCLUDES

A. Temporary facilities and necessary controls for the Project, including utilities, telephone, sanitary facilities, storage sheds and building, safety requirements, first aid equipment, fire protection, security measures, protection of the Work and property, access roads and parking, environmental controls, pest and rodent control and disposal of trash, debris and excavated material.

B. Facilities and controls specified in this section are considered minimum for the Project. Provide additional facilities and controls for proper execution of the Work and to meet Contractor's responsibilities for protection of persons and property.

1.02 MEASUREMENT AND PAYMENT

A. UNIT PRICES

1. No separate payment will be made for any temporary facilities and controls required under this section. Include cost of such work in contract price listed for mobilization.

1.03 CONTRACTOR'S RESPONSIBILITY

A. Comply with applicable requirements specified in other sections of Specifications.

1. Maintain and operate temporary facilities and systems to assure continuous service.

2. Modify and extend systems as the Work progress requires.

3. Completely remove temporary materials and equipment when no longer required.

4. Restore existing facilities used for temporary services to specified or original condition.

PART 2 PRODUCTS - NOT USED

PART 3 EXECUTION

3.01 TEMPORARY UTILITIES

A. Obtaining Temporary Service:

1. Make arrangements with utility service companies for temporary services.

2. Abide by rules and regulations of the utility service companies or authorities having jurisdiction.

3. Be responsible for utility service costs until Date of Substantial Completion. Included are fuel, power, light, heat, and other utility services necessary for execution, completion, testing, and initial operation of work.

B. Water:

1. Provide water required for and in connection with work to be performed and for specified tests of piping, equipment, devices, or for other use as required for proper completion of the Work.

2. Water to be drawn from public fire hydrants. Obtain transit meter from City of Houston, Department of Public Works and Engineering, Taps and Meters Section. Pay required deposit based on rates established by latest ordinance.

3. Provide and maintain an adequate supply of potable water for domestic consumption by Contractor personnel, Project Manager and representatives of the City.

C. Electricity and lighting:

1. Provide electric power service required for the Work including required testing, lighting, operation of equipment, and other Contractor use.

2. Electric power service includes temporary power or generators required to maintain plant operations during scheduled shutdowns.

3. Minimum lighting level shall be 10 foot-candles for open areas; 20-foot-candles for stairs and shops. Provide a minimum of one 300-watt lamp for each 200 square feet of work area.

D. Temporary Heat and Ventilation:

1. Provide temporary heat necessary for protection or completion of the Work.

2. Provide temporary heat and ventilation to assure safe working conditions; maintain enclosed areas at a minimum of 50 degrees F.

E. Telephone:

1. Provide emergency telephone service at Project site for use by Contractor personnel and others performing work or furnishing services at the site.

2. Provide Houston-Metro lines, allowing unlimited calls, without charge in Greater Houston Metropolitan area with "call waiting" and "call forwarding" options. Provide one telephone answering machine with beeperless remote message retrieval capability.

F. Sanitary Facilities:

1. Provide and maintain sanitary facilities for persons on the site; comply with regulations of State and local departments of health.

2. Enforce use of sanitary facilities by construction personnel at site. Enclose sanitary facilities. Pit-type toilets are not permitted. No discharge will be allowed from these facilities. Collect and store sewage and waste so as not to cause nuisance or health problems. Haul sewage and waste off-site and properly dispose in accordance with applicable regulations.

3. Locate toilets near the Work site and secluded from view insofar as possible. Keep toilets clean and supplied throughout the course of the Work.

3.02 STORAGE SHEDS AND BUILDINGS

A. Provide adequately ventilated, watertight storage facilities with floor above ground level for Products susceptible to weather damage.

B. Storage of Products not susceptible to weather damage may be on blocks off the ground.

C. Store Products in a neat and orderly manner. Place Products to permit easy access for identification, inspection and inventory.

D. Fill and grade site for temporary structures to provide drainage away from temporary and existing buildings.

3.03 SAFETY REQUIREMENTS

A. Submit a safety program at the pre-construction meeting and follow the program in accordance with Document 00700 – General Conditions. Include documented response to trench safety requirements of Section 02260 - Trench Safety System.

B. Conduct operations in strict accordance with applicable Federal, State and local safety codes and statutes and with good construction practice. Establish and maintain procedures for safety of all work, personnel and equipment involved in the Work.

C. Observe and comply with Texas Occupational Safety Act (Art. 5182a, V.C.S.) and with all safety and health standards promulgated by Secretary of Labor under Section 107 of Contract Work Hours and Standards Act, published in 29 CFR Part 1926 and adopted by Secretary of Labor as occupational safety and health standards under Williams-Steiger Occupational Safety and Health Act of 1970, and to other legislation enacted for safety and health of Contractor employees. Safety and health standards apply to Subcontractors and Suppliers as well as to the Contractor.

D. Observance of and compliance with safety regulations is Contractor's responsibility without reliance or superintendence of or direction by Project Manager. Immediately advise Project Manager of investigation or inspection by Federal Safety and Health inspectors of Contractor's or Subcontractor's work or place of work on site under the Contract, and after investigation or inspection, advise Project Manager of results. Submit one copy of accident reports to Project Manager within 10 days of occurrence.

E. Protect areas occupied by workmen using the best available devices for detection of lethal and combustible gases. Test devices frequently to assure functional capability. Constantly observe infiltration of liquids into the Work area for visual or odor evidence of contamination, and immediately take appropriate steps to seal off entry of contaminated liquids to the Work area.

F. Implement safety measures, including but not limited to safety personnel, first-aid equipment, ventilating equipment and other safety equipment specified or detailed on Drawings.

G. Maintain required coordination with City Police and Fire Departments during entire period covered by the Contract.

H. Include Project safety analysis in safety plan. Itemize major tasks and potential safety hazards. Plan to eliminate hazards or protect workers and public from each hazard.

3.04 FIRST AID EQUIPMENT

A. Provide a first aid kit throughout the construction period. List telephone numbers for physicians, hospitals, and ambulance services in each first aid kit.

B. Have at least one person thoroughly trained in first aid and CPR procedures present on the site when work is in progress. Contractor to conform to protocols and requirements for training and protection against "blood borne pathogens".

3.05 FIRE PROTECTION

A. Conform to specified fire protection and prevention requirements established by Federal, State, or local governmental agencies and as provided in Safety Program.

3.06 SECURITY MEASURES

A. Protect the Work, materials, equipment, and property from loss, theft, damage, or vandalism. Protect City property used in performance of the Contract.

B. If existing fencing or barriers are breached or removed for purposes of construction, provide and maintain temporary security fencing equal to existing.

3.07 PROTECTION OF UTILITIES AND PIPELINES

A. Prevent damage to existing public utilities during construction. Approximate locations of known utilities are shown on Drawings, but all lines may not be shown. Excavate with caution and repair lines damaged by construction operations.

B. Use the Utility Coordinating Committee One Call System, telephone number, (713) 223-4567, which must be called 48 hours in advance. The toll free telephone number is 1-800-669-8344, Texas One Call System.

C. Before excavating, locate underground utilities by appropriate means including the use of metal detection equipment, and probes, or by excavation or surveys. Repair damage caused by investigative work and by failure to locate or to preserve underground utilities.

D. Give utility owners a minimum five days notice before commencing excavation to allow time to locate utilities and make adjustments or

relocations when they conflict with the Work. Include cost for temporary relocation of water, wastewater, and storm drainage lines, necessary to accommodate construction, in unit prices for utility construction unless otherwise noted. Bypassing of sanitary waste to storm drainage facilities is not allowed.

E. Prior to excavation near pipelines, request a representative of the pipeline company to meet with Contractor and Project Manager at the site to discuss procedures to be used. Request pipeline company's representative to locate the pipelines in at least three locations: at each side and at centerline of proposed excavation of proposed utility. Also request representative and Project Manager to be present to observe Contractor operations when excavation is conducted within 15 feet of pipeline.

F. Utility service lines are not shown on the construction document drawings. Contractor should anticipate that such service lines exit and should exercise extreme caution during construction. The utility service lines should be repaired and restored immediately as per the specification, if damaged due to any construction activities. No separate payment will be made for this repair and restoration work. Include payment in unit price for work in appropriate sections.

G. Prior to abandonment of utility, make appropriate arrangements with City and owner of utility to terminate service, remove meters, tranformers, and poles as may be required by site conditions.

3.08 PROTECTION OF THE WORK AND PROPERTY

A. Preventive Actions

1. Take necessary precautions and actions to prevent damage, injury, or loss to the Work or public and private property, including:

a. Storage of apparatus, supplies, and Products in an orderly, safe manner to limit interference with progress of the Work or work of other contractors, utility service companies, or the City's operations.

b. Suitable storage for Products subject to damage by exposure to weather, theft, breakage, etc.

c. Limitation of loading pressures imposed upon portions of the Work.

d. Frequent clean up of refuse, scrap materials, and debris from construction operations, necessary to maintain the site in a safe and orderly condition.

e. Provision of barricades and guard rails to protect pedestrian and traffic around openings, scaffolding, temporary stairs and ramps, excavations, elevated walkways, and other hazardous areas.

2. Protect public and private property adjacent to the site. Obtain written consent before entering or occupying privately-owned land except on easements provided for construction. Restore property damaged by construction operations to condition equal to or better than that existing before the damage.

B. Barricades and Warning Systems

1. Where work is performed on or adjacent to roadways, rights-of-ways, or public land, provide barricades, fences, lights, warning signs, danger signals, and other precautionary measures necessary for protection of persons or property and for protection of the Work.

a. Erect sufficient barricades to keep vehicles and pedestrians from entering the Work. Paint barricades to be visible at night. From sunset to sunrise, provide at least one light at each barricade.

b. Maintain barricades, signs, lights, and provide watchmen until Project Manager approves removal. Whenever work creates encroachment onto public roadways, station flagmen to manage traffic flow in accordance with approved traffic control plan.

c. Conform to requirements of section 01555 – Traffic Control and regulation.

C. PROTECTION OF EXISTING STRUCTURES

1. Underground Facilities

a. Known Underground Facilities are shown on the Drawings but all Facilities may not be shown. Explore sufficiently ahead of trenching and excavation work to locate Underground Facilities in order to prevent damage to them and to prevent interruption of utility services. Restore damage to Underground Facilities to original condition at no additional cost to the City.

b. If necessary to avoid unanticipated Underground Facilities, Project Manager may make changes in location of the Work.

c. If permanent relocation of an Underground Facility is required

and not provided for in the Contract documents, City Engineer will direct Contractor in writing to perform the Work under Modification provisions in Document 00700 - General Conditions.

2. Surface Structures include buildings, tanks, walls, bridges, roads, dams, channels, open drainage, piping, poles, wires, posts, signs, markers, curbs, walks, guard cables, fencing, and other facilities that are visible above the ground level.

3. Protection of Underground Facilities and Surface Structures:

   a. Support in place and protect Underground Facilities and Surface Structures located within or adjacent to the limits of the Work from damage. Install supports as required by the owner of the structure. Satisfy Project Manager that the owner of the facility or structure has approved methods and procedures before installing structure supports.

   b. Avoid moving or changing public utility or private corporation property without prior written consent of a responsible official of the facility or structure. Allow representatives of utilities to enter the construction site for maintenance and repair purposes or to make necessary changes.

   c. Notify utility and pipeline owners and operators of the nature of construction operations and dates when operations will be performed. When construction operations are required in immediate vicinity of existing structures, pipelines, or utilities, give a minimum of five working days advance notice. Probe and flag location of Underground Facilities prior to commencement of excavation. Keep flags in place until construction operations uncover the facility.

   d. Assume risk for damages and expenses to Underground Facilities and Surface Structures within or adjacent to the Work.

D. Employ a structural engineer to ensure protection measures are adequate for the safety and integrity of structures and facilities.

E. PROTECTION OF INSTALLED PRODUCTS:

1. Provide protection of Installed Products to prevent damage from subsequent operations. Remove protection facilities when no longer needed, prior to completion of the Work.

2. Control traffic to prevent damage to Products and surfaces.

3. Provide coverings to protect Products from damage. Cover projections, wall corners, jambs, sills, and exposed sides of openings in areas used for traffic and passage of materials in subsequent work.

3.09 ROADS AND PARKING

A. Prevent interference with traffic and operations of the City on existing roads.

B. Designate temporary parking areas to accommodate construction and City personnel. When site space is not adequate, provide additional off-site parking. Locate as approved by Project Manager.

C. Minimize use by construction traffic on existing streets and driveways.

D. Do not allow heavy vehicles or construction equipment in existing parking areas.

3.10 ENVIRONMENTAL CONTROLS

A. Use methods, equipment, and temporary construction necessary for control of environmental conditions at the site and adjacent areas.

B. Comply with statutes, regulations, and ordinances relating to prevention of environmental pollution and preservation of natural resources including National Environmental Policy Act of 1969, PL 91-190, Executive Order 11514.

C. Minimize impact to the surrounding environment. Do not use construction procedures that cause unnecessary excavation and filling of terrain, indiscriminate destruction of vegetation, air or stream pollution, or harassment or destruction of wildlife.

D. Limit disturbed areas to boundaries established by the Contract. Do not pollute on-site streams, sewers, wells, or other water sources.

E. Do not burn rubbish, debris or waste materials.

3.11 POLLUTION CONTROL

A. Provide methods, means, and facilities necessary to prevent contamination of soil, water or the atmosphere by discharge of Pollutants from construction operations.

B. Provide equipment and personnel to perform emergency measures to contain spillage, and to remove contaminated soils or liquids. Excavate and dispose of contaminated earth off-site in accordance with laws and regulations, and

replace with suitable compacted fill and topsoil.

C. Provide systems necessary for control of Pollutants.

1. Prevent toxic concentrations of chemicals.

2. Prevent harmful dispersal of Pollutants into the environment.

D. Use equipment that conforms to current Federal, State, and local laws and regulations.

3.12 PEST AND RODENT CONTROL

A. Provide rodent and pest control as necessary to prevent infestation of construction or storage areas.

B. Employ methods and use materials that will not adversely affect conditions at site or on adjoining properties.

3.13 NOISE CONTROL

A. Provide vehicles, equipment, and use construction activities that minimize noise to the greatest degree practicable. Conform to noise levels of Chapter 30 –Noise and Sound Level Regulation, City Code of Ordinances, and latest OSHA standards. Do not permit noise levels to interfere with the Work or create a nuisance to surrounding areas.

B. Conduct construction operations during daylight hours except as approved by Project Manager.

C. Select construction equipment that operates with minimum noise and vibration. When directed by Project Manager, correct objectionable noise or vibration produced by operation of equipment at no additional cost to the City. Sound Power Level (PWL) of equipment shall not exceed 85 dbA (re: 10^{-12} watts) measured five feet from the equipment, or at a lower level if prescribed by City Ordinances. Equipment noise requirements are contained in equipment specifications.

3.14 DUST CONTROL

A. Use water or other methods approved by Project Manager to control amount of dust generated by vehicle and equipment operations.

3.15 WATER RUNOFF AND EROSION CONTROL

A. Comply with requirements of section 01410 – TPDES Requirements.

B. Conduct fill, grading and ditching operations and provide adequate methods necessary to control surface water, runoff, subsurface water, and water from excavations and structures in order to prevent damage to the Work, the site, or adjoining properties.

1. Plan and execute construction and earthwork by methods that control surface drainage from cuts and fills, and from borrow and waste disposal areas.

2. Minimize area of bare soil exposed at one time.

3. Provide temporary control measures, such as berms, dikes, and drains.

4. Provide, operate, and maintain equipment and facilities of adequate size to control surface water.

5. Construct fill and waste areas by selective placement of materials to eliminate erosion of surface silts or clays that may erode.

6. Direct water away from excavations, pits, tunnels, and other construction areas to prevent erosion, sedimentation or damage.

7. Maintain existing drainage patterns adjacent to the site by constructing temporary earth berms, sedimentation basins, retaining areas, and temporary ground cover.

8. Dispose of drainage water in a manner to prevent flooding, erosion, or other damage to the site or adjoining areas, in conformance with environmental requirements.

9. Inspect earthwork periodically to detect any evidence of erosion. Take corrective measures as required to control erosion.

END OF SECTION

Section 01506

DIVERSION PUMPING

PART 1 G E N E R A L

1.01 DEFINITIONS

A. Diversion-pumping: Installation and operation of bulkheads, plugs, hoses, piping, and pumps required to maintain sewer flow and prevent backups and overflows.

1.02 SYSTEM DESCRIPTION

A. Provides continuous sewer service to users of sewer systems while maintenance or construction operations are in progress, by diverting flow around construction locations. Maintain sewer flow to prevent backup or overflow onto streets, yards and unpaved areas or into buildings, adjacent ditches, storm sewers, and waterways. Do not divert sewage outside of sanitary sewer system.

B When pumps are operating, have an experienced operator on site to monitor operation, adjust pumps, make minor repairs to system, and report problems.

1.03 SUBMITTALS

A. Conform to requirements of Section 01330 - Submittals Procedures.

B. For systems that bypass sanitary sewer line segments of 42-inch diameter or larger, submit a Diversion Pumping Plan prior to installation. Show location, number and size of pumps, number, location, size and type of hoses or rigid piping, and location of downstream discharge; and special features where pipes or hoses cross roadways, temporary trenches, support bridges.

1.04 SCHEDULING

A. When the City operates or maintains diversion pumping in construction areas, coordinate construction activities with Project Manager.

B. Cease operation of diversion pumping when approved by Project Manager.

PART 2 PRODUCTS

2.01 MATERIALS

A. Design piping, joints and accessories to withstand at least twice maximum system pressure or 50 psi, whichever is greater.

B. Use self-priming type or submersible electric pumps, with a working pressure gauge on the discharge. Pumps shall meet requirements of City of Houston Noise and Sound Level Regulations.

PART 3 EXECUTION

3.01 FIELD QUALITY CONTROL

A. During diversion pumping, do not allow sewage to leak, dump, or spill into or onto areas outside of existing sanitary sewer systems.

B. In the event of an accidental spill or overflow, immediately stop discharge and take action to clean up and disinfect spill. Promptly notify Project Manager so required reporting can be made to the Texas Commission on Environmental Quality (TCEQ) and the Environmental Protection Agency (EPA).

3.02 CLEANING

A. When diversion-pumping operations are complete, drain sewage within piping into sanitary sewers prior to disassembly.

END OF SECTION

Section 01520

TEMPORARY FIELD OFFICE

PART 1 GENERAL

1.01 SECTION INCLUDES

A Temporary field office building and associated parking area.

1.02 FACILITY DESCRIPTION

A Temporary field office to be utilized by authorized representatives of the City to coordinate and monitor daily construction activities performed by Contractor.

B. Field office shall be a non-smoking facility.

PART 2 PRODUCTS

2.01 FIELD OFFICE

A General:

1. Locate office in vicinity of the Work at a location approved by Project Manager or where indicated on Drawings.

2. Furnish, Install and maintain field office for exclusive use of authorized representatives of the City. Provide sufficient room for Project meetings and Inspector's office.

3. Provide office within 10 days of Date of Commencement of the Work.

4. Construct two all-weather, hard surfaced parking spaces for exclusive use of authorized representatives of the City. Provide all-weather surfaced walk between parking spaces and field office.

B. Minimum Construction:

1 Structurally sound foundation and superstructure.

Weather tight with insulated roof, walls and 7-foot ceiling (minimum).

3. Stairs or walkway with handrail and covered entrance platform (minimum 4 feet by 4 feet) with mud scraper at door.

4. Resilient floor covering.

5. Screened windows with area equal to approximately 10 percent of floor area sufficient for light, view of the site, and ventilation. Provide each window with operable sash and burglar bars.

6. Secure exterior doors with dead-bolt cylinder locks and burglar bars.

C. Minimum Services:

1. Exterior entrance light.

2. Interior lighting of 75 foot-candles minimum at desktop height

3. Automatic heating to maintain 65 degrees F in winter.

4. Automatic cooling to maintain 75 degrees F in summer.

5. Electric power service.

6. Three telephone service lines one for voice, one for data, and one for fax, for exclusive use of authorized representatives of the City.

7. Sanitary facilities in field office with one water closet, one lavatory, and one medicine cabinet for exclusive use of authorized representatives of the City.

D. Minimum Furnishings:

1. One 5-drawer desk

2. Two swivel desk chairs with casters.

3. One plan table.

4. One drawing plan rack.

5. One 4-drawer legal file cabinet complete with fifty legal-size hanging folders and two full-sized carriers.

6. One marker board with cleaner and markers.

7. Two waste baskets.

8. One 30-inch by 36-inch tack board.

9. One all-purpose fire extinguisher.

10. Six protective helmets (hard hats) with ratchet adjustment for exclusive use of authorized representatives of the City.

11. Conference table and chairs to accommodate 10 persons.

12. All in one printer, copier, plain paper fax machine.

13. Telephone instrument separate from fax machine.

E. Provide adequate space for one set of Contract documents for ready reference.

PART 3 EXECUTION

3.01 MAINTENANCE

A Maintain all-weather surface driveway and parking areas, buildings, walkways, stairs and required furnishings and equipment for duration of the Contract.

B. Provide janitorial services for duration of the Contract consisting of twice weekly sweeping and mopping floors, trash removal, weekly restroom cleaning, and weekly dusting of furniture and equipment.

C. Provide soap, paper towels, toilet paper, cleansers and other necessary consumables.

D. Immediately repair damage, leaks or defective service.

3.02 PROJECT CLOSEOUT

A Remove temporary field office and signs and restore site as specified in Section 01770 - Closeout Procedures.

END OF SECTION

SECTION 01560

SITE SECURITY

PART 1 GENERAL

1.01 SCOPE OF WORK

A. Contractor shall be responsible for protection of the site, and all Work, materials, equipment, and existing facilities hereon, from actions of the Contractor, and his employees, including all sub-contractors and suppliers, whether engaged in the execution of the Work under this Contract, or engaged in any other activity while present on the site.

B. Contractor shall also be responsible for loss protection and protecting all of the Contractor's property, equipment, assets and employees while on the work site.

C. No claim shall be made against Owner by reason of any act of an employee or trespasser.

D. Contractor shall comply with all security measures required by the Owner, including access badging requirements, background security checks, vehicle searches, and all other security measures, either required in this Section or as appropriate on the job site. Owner reserves the right to permanently exclude from the site, at any time, any personnel proposed by the Contractor for security reasons, including, but not limited to, failure to comply with City security measures.

E. Contractor shall be solely responsible for all security and loss prevention within the Temporary Field Office Area and Work Area throughout the duration of the Contract.

1.02 PAYMENT BY CONTRACTOR TO CITY FOR OVERTIME SITE SECURITY

A. Contractor shall reimburse the City for overtime site security for personnel and equipment that are required beyond the normal working hours as defined in this Section.

1.03 MANDATORY BACKGROUND CHECKS AND CITY OF HOUSTON BADGING REQUIREMENTS

A. All Contractor employees and subcontractors must be a U.S. Citizen or have a legal work permit. Each person must also present a valid unexpired U.S. state driver's license or photo identification card. A U.S. issued resident alien card, with photo, passport, or other U.S. state or U.S. federal photo documentation is acceptable to present for identification purposes.

B. Contractor shall conduct background security checks, to include criminal records and driving records, on all employees at time of hiring and periodically thereafter and provide copies to PUD Security prior to first day of work for each employee.

C. The City of Houston/PUD Security Group will also conduct a criminal background check on all Contractor and subcontractor employees assigned to work on the site. Attachment A to this Section is a copy of the City's "Disclosure and Consent for Release of Information" form which must be completed and submitted to the City for each employee of the Contractor and its subcontractors before they are granted access to the work site.

D. Each employee of the Contractor and its subcontractors will be required to apply for, and receive, a City of Houston identification card/access badge before being granted access to the work site. Attachment B to this Section is a copy of the City's "Badging/ Access Information Sheet" which must be completed and submitted to the City at the time the Contractor or subcontractor employee is photographed for the identification card/access badge. The City of Houston photo identification office is located at 611 Walker Street in Houston, Texas on the 3rd floor of the annex (832-395-5175 phone 832-395-5187 fax). The badge office hours are Tuesday and Thursday from 8:30 am to 4:00 pm.

E. Equipment vendors or manufacturer's representatives who will be required to be on-site for more than four (4) consecutive working days, or cumulatively more than eight (8) working days will be required to comply with background check and badging requirements in Paragraphs C. and D. of this Section.

F. Identification cards/access badges will only be issued by the City once a background check has been completed for the Contractor of subcontractor employee, and clearance has been granted by the City.

G. All construction employees must show a valid identification card upon request while working on site.

H. The Contractor shall provide City of Houston/PUD Security a weekly list of current contractor and subcontractor employees. This list shall be updated immediately by the Contractor as changes occur.

I. Lost cards are disabled and replacement cost is $50.00.

1.04 CONTRACTOR / SUBCONTRACTOR HARDHAT IDENTIFICATION

A. Each Contractor employee, including subcontractors, must wear a hard hat with proper identification. Each hardhat shall display a distinctive corporate logo to identify the responsible company.

1.05 VEHICLE IDENTIFICATION/PARKING PASS

A. The Contractor shall provide the Owner with a list of the following information for their vehicles: year, make, model, color, state, license plate number, company that employs the driver, and the driver's name. Any changes shall be forwarded to the Owner within 24 hours of becoming aware of the need for a change.

B. Contractor personal vehicles may be parked only in the areas designated for such parking. Any vehicle found to be in violation of parking requirements is subject to being towed from the site at the risk and expense of the vehicle owner.

C. Contract company-owned and/or leased vehicles entering City of Houston/PUD facilities must have company logos displayed on both sides of the vehicle. Company logos must be displayed on the body of the vehicle.

D. Contract personnel utilizing their personal vehicles for company business inside a City of Houston/PUD facility must also display company logos. They may display their company logo on each side of their rear side windows. If the vehicle is a pickup truck the logo may be placed in the back glass. The logo must not be smaller than 5" X 8" in size and must be easily read from a distance of not less than 100 feet. Logos must remain on the vehicle while inside the City of Houston/PUD facility and may not be removed until the vehicle exits the gate.

E. All equipment on rubber tires, such as mobile cranes, backhoes, air compressors, welding machines, etc must also display company logos while being operated inside a City of Houston/PUD facility.

F. All deliveries are subject to random inspections by security personnel.

1.06 DELIVERIES

A. All Contractor deliveries shall occur only during scheduled Contractor working hours, including work time scheduled on Sundays, legal holidays and/or outside of the normal working hours specified in the Supplementary Conditions. No unscheduled, after-hour deliveries are permitted without prior approval of the Construction Manager. No deliveries shall be permitted at any time that the Contractor is not scheduled to work and on-site.

B. The Contractor shall provide a list of all anticipated deliveries to the Construction Manager each Monday morning and/or Friday afternoon with updates provided each day in the morning if required due to scheduling changes.

1.07 VISITOR ACCESS

A. The Contractor shall provide a list of all anticipated, un-badged site visitors, including drivers license number, to the Construction Manager and the City's Security Contractor each Monday morning and/or Friday afternoon with updates provided each day in the morning if required due to scheduling changes.

B. Contractor shall provide the Construction Manager with twenty-four (24) hours advance notice of the scheduled arrival of any un-badged visitor, including drivers license number, who is requesting access to Work Site Area.

C. Only un-badged visitors with a material interest in the Work may be granted authorized access to the site, at the discretion of the Construction Manager and the City's Security Contractor.

D. In addition to delivery vehicles described in Paragraph 1.6 above, visitors with a material interest in the Work may include manufacturer's representatives, equipment vendors, testing laboratory personnel, and other personnel whom the Construction Manager and the City's Security Contractor determine have a material interest in the Work.

E. No visitor shall be allowed into Work Site without a temporary badge issued by the City's Security Contractor.

F. Visitors who are expected to be on-site for more than four (4) consecutive work days, or eight (8) cumulative work days shall comply with the background check and badging requirements listed in Paragraph 1.03 above. The Construction Manager and the City's Security Contractor may require repeat visitors who exceed eight (8) cumulative work days on-site to comply with background check and badging requirements prior to granting further authorization to access Work Site.

1.08 CONTRACTOR'S WORK SITE SECURITY

A. The Contractor must store all equipment and materials only in those areas designated by the Owner for this purpose. The Owner is neither responsible nor liable for any equipment, materials, or other property of the Contractor.

B. The Contractor may choose, at his expense, to provide additional security elements as desired to adequately protect his assets on the job site.

1.09 INTERVIEWING

A. Contractor shall not conduct any interviews of potential employees on the plant site. All interviews must be conducted off-site.

1.10 INSPECTIONS AND SUPERVISION

A. The Construction Manager and/or the City of Houston/PUD Security Section will, at their discretion, inspect the security facilities and review operations and will report, in writing, to the Contractor the results of such inspections. Upon request of the Construction Manager and/or the City of Houston/PUD Security Section, the Contractor shall, within two working days of receipt of the report, identify, in writing, the corrective actions to be taken to address any deficiencies or problems with the work noted in the report. The corrective actions shall be implemented by the Contractor immediately upon direction of the Construction Manager.

1.11 DOCUMENTATION AND REPORTING REQUIREMENTS

A. The Contractor shall maintain copies of records, including but not limited to, each of the following items using forms provided by or approved by the Construction Manager.
   1. A regularly maintained and updated list of all authorized Contractor and Subcontractor personnel and all Contractor and Subcontractor vehicles authorized by the City for use on the site.
   2. A list of all scheduled site visitors and deliveries associated with the Contractor's Work.
   3. A complete record of all reported incidents of injury, fire, or emergency.
   4. A complete record of all reported incidents of theft or vandalism.
   5. A complete record of all infractions of the Project Rules and Regulations.

1.12 VEHICLES AND/OR MOBILE EQUIPMENT

A. Entry on site for vehicles and mobile equipment and drivers shall be entirely at risk of Contractor, Subcontractors and/or individual seeking such entry.

B. All vehicles and equipment requested to be site permitted shall be duly inspected, licensed and covered by insurance as required by the Contract Documents, before Contractor and Subcontractors request permission for their entry on site.

C. Drivers/operators shall be fully and currently licensed and/or certified to drive the type of vehicle or to operate the type of equipment brought on-site.

D. Drivers shall observe and obey all Texas Laws at all times.

E. The maximum permissible speed on site is 20 MPH, however, speeds much lower than this may be the maximum safe speeds and it is the direct responsibility of the diver to drive at a safe speed in any area at any given time according to the circumstances existing at that time and place.

F. The movement and parking of vehicles and equipment on site shall be kept to the minimum necessary to meet construction requirements.

G. Vehicles not directly associated with the performance of the Work shall not be granted entry to site.

H. All vehicles and loads shall be subject to search by City security personnel, CM, or other authorized personnel at any location on site at any time.

I. Vehicles may only be driven or parked in construction areas, or access roads only when directly engaged in deliveries to that area and subject to regulations stated herein. No vehicle or mobile equipment shall be left unattended when in construction areas or access roads or in operating plant areas.

J. No vehicle or equipment shall be parked or placed on any road on site as to hinder or prevent clear passage of other vehicles thereof, unless the requirements of the Work so necessitate, in which case the prior written approval of CM for such hindrance shall have been obtained. Comply with Section 01555.

K. Movement of heavy mobile equipment on plant paved roads shall be performed in a manner which precludes damage to the pavement and related structures. The Contractor shall be wholly responsible for the protection and safety of life and property including roadways, structures and other equipment while such movement is in progress and shall repair all damage caused thereby at no additional cost to the City.

PART 2 PRODUCTS

Not Used.

PART 3 EXECUTION

Not Used.

END OF SECTION

CITY OF HOUSTON

Public Works & Engineering
Public Utilities Division

Disclosure & Consent for Release of Information

Applicant Name: (First, Middle, Last)	Current Address: (Street Address)
(1) Other Name(s) Used: (Like Maiden)	City: State: Zip:
(2) Other Name(s) Used:	(1) Former Address:
Driver's License No. State Issued:	City: State: Zip:
Date of Birth:	(2) Former Address:
Place of Birth: (City, County, State, & Country)	City: State: Zip:

Applicant Instructions: Please read this disclosure and consent form carefully before signing. You will be provided a copy of this form at any time upon request.

DISCLOSURE AND CONSENT CONCERNING CONSUMER REPORTS AND CRIMINAL BACKGROUND CHECKS.
Read carefully. This consent and release has been provided to you for the City of Houston to request a copy criminal background check, employment records, consumer report, or investigative consumer reports in connection with your services as a contractor for the City of Houston.

The Applicant acknowledges that the City of Houston may now, or at any time while providing contract services, verify information within the application. The verifications and/or checks may include but not limited to: driving record, employment records/references, personal references, any educational and licensing institution and to receive any criminal record information pertaining to me which may be in the files of any Federal, State, or Local criminal justice agency in any State of the United States of America. A photocopy or telephonic facsimile (Fax) of this Disclosure and Consent authorization for Release of Information shall be valid as the original. The results of this verification process will be used to determine eligibility to provide contract services to the City of Houston. All results will be kept CONFIDENTIAL. The information obtained will not be provided to any parties other than to designated City of Houston personnel.

CONSENT STATEMENT:
I have carefully read and understand this disclosure and consent form and by my signature consent to the release/copy of criminal background check, employment records, consumer report, or investigative consumer reports, as defined above. I further understand this consent will apply during the course of my services as a contractor to the City of Houston, and that such consent will remain in effect until revoked in a written document signed by me. In the event that I wish to refuse or revoke my consent at any time, I understand that I may do so. I further understand that any and all information contained by the City of Houston may be utilized for the purpose of obtaining a criminal background check, consumer reports or investigative consumer reports requested by the City of Houston and confirm that all such information is true and correct.

I, the undersigned applicant, do hereby certify that the information provided by me is true and complete to the best of my knowledge. I understand that any false statements will be considered as a cause for denied access to any City of Houston property to provide contract services.

I authorize the City of Houston and any of its agents/personnel, to disclose orally and in writing the results of this verification process and/or interview to authorized representatives. I do hereby agree to forever release and discharge the City of Houston, and personnel to the full extent permitted by law from any claims, damages, losses, liabilities, costs and expenses, or any other charge or complaint arising from the retrieving and reporting of information.

Signature: _____ **Date:** _____

Print Name: _____

Email the filled out form to Tammy Spriggs (Tammy.Spriggs@houstontx.gov) and Shandra Jones (Shandra.Jones@houstontx.gov).

Section 01570

STORM WATER POLLUTION PREVENTION CONTROL

PART 1 G E N E R A L

1.01 SECTION INCLUDES

A. Implementation of Storm Water Pollution Prevention Plans (SWP3) described in Section 01410 – TPDES Requirement.

B. Installation, maintenance and removal, of storm water pollution prevention structures: diversion dikes, interceptor dikes, diversion swales, interceptor swales, down spout extenders, pipe slope drains, paved flumes and level spreaders. Structures are used during construction and prior to final development of the site.

C. Filter Fabric Barriers:

1. Type 1: Temporary filter fabric barrier for erosion and sediment control in non-channelized flow areas.

2. Type 2: Temporary reinforced filter fabric barrier for erosion and sediment control in channelized flow areas.

D. Hay Bale Fence.

E. Drop Inlet Basket

F. Inlet Sediment Traps

G. Brush Berm

H. Sand Bag Barrier

I. Bagged Gravel Barrier

J. Sediment Basin

K. Inlet Protection Barrier

1.02 MEASUREMENT AND PAYMENT

A. UNIT PRICES

1. Payment for filter fabric barrier is on a linear foot basis measured between limits of beginning and ending of stakes.

2. Payment for reinforced filter fabric barrier is on a linear foot basis measured between limits of beginning and ending of stakes.

3. Payment for drop inlet baskets is on a unit price basis for each drop inlet basket.

4. Payment for storm inlet sediment traps is on a unit price basis for each storm inlet sediment trap.

5. Payment for storm water pollution prevention structures is on a lump sum basis for the project. Earthen structures with outlet and piping include diversion dikes, interceptor dikes, diversion swales, interceptor swales, and excavated earth-outlet sediment trap, embankment earth-outlet sediment trap, down spout extenders, pipe slope drains, paved flumes, stone outlet sediment trap, and level spreaders.

6. Payment for hay bale barrier, if included in Document 00410 - Bid Form, is on a linear foot of accepted bale barriers, if not include in cost of storm water pollution prevention structures.

7. Payment for brush berm, if included in Document 00410 - Bid Form, is on a linear foot of accepted brush berm, if not include in cost of storm water pollution prevention structures.

8. Payment for sandbag barrier, if included in Document 00410 - Bid Form, is on a linear foot basis measured between limits of beginning and ending of sandbags, if not include in cost of storm water pollution prevention structures.

9. Payment for bagged gravel barrier, if included in Document 00410 - Bid Form, is on a linear foot basis measured between limits of beginning and ending of bagged gravel barrier, if not include in cost of storm water pollution prevention controls.

10. Payment for inlet protection barriers, if included in Document 00410 - Bid Form, is on a linear foot basis measured along outside face of inlet protection barrier, if not include in cost of storm water pollution prevention structures.

11. Refer to Section 01270 - Measurement and Payment for unit price procedures.

B. Stipulated Price (Lump Sum) Contract. If Contract is Stipulated Price Contract, payment for Work in this Section is included in total Stipulated

1.03 REFERENCE STANDARDS

A. ASTM

1. A 36 – Standard Specification for Carbon Structural Steel.

2. D698 – Standard Test Methods for Laboratory Compaction Characteristics of Soil Using Standard Effort (12,400 ft-lbf/ft3 (600kN-m/m3)).

3. D3786 – Standard Test Method for Hydraulic Bursting Strength for knitted Goods and Nonwoven Fabrics.

4. D 4355 - Standard Test Method for Deterioration of Geotextiles from Exposure to Ultraviolet Light and Water (Xenon-Arc Type Apparatus).

5. D 4491 - Standard Test Methods for Water Permeability of Geotextiles by Permittivity.

6. D 4632 - Standard Test Method for Grab Breaking Load and Elongation of Geotextiles.

7. D 4833 - Standard Test Method for Index Puncture Resistance of Geotextiles, Geomembranes, and Related Products.

8. D 6382 - Standard Practice for Dynamic Mechanical Analysis and Thermogravimetry of Roofing and Waterproofing Membrane Material.

B. Storm Water Management Handbook for Construction Activities prepared by City of Houston, Harris County and Harris County Flood Control District.

1.04 SYSTEM DESCRIPTIONS

A. Filter Fabric Barrier Type 1 and Type 2: Install to allow surface or channel runoff percolation through fabric in sheet-flow manner and to retain and accumulate sediment. Maintain Filter Fabric Barriers to remain in proper position and configuration at all times.

B. Hay Bale Fence: Install to allow surface runoff percolation through hay in sheet-flow manner and to retain and accumulate sediment. Maintain Hay Bale Fence to remain in proper position and configuration at all times.

C. Interceptor Dikes and Swales: Construct to direct surface or channel runoff around the project area or runoff from project area into sediment traps.

D. Drop Inlet Baskets: Install to allow runoff percolation through the basket and to retain and accumulate sediment. Clean accumulation of sediment to prevent clogging and backups.

E. Sediment Traps: Construct to pool surface runoff from construction area to allow sediment to settle onto the bottom of trap.

F. Sand Bags: Are used during construction activities in unstabilized minor swales, ditches, or streambeds when the contributing drainage area is no greater than 2 acres. It is also sediment barrier for stage one Inlet.

G. Bagged Gravel Barrier: Are used during construction activities in unstabilized minor swales, ditches, or streambeds when the contributing drainage area is no greater than 2 acres. It is also sediment barrier for stage two Inlet.

H. Drop Inlet Insert Basket: Is a temporary barrier placed within a storm drain inlet (Lower Portion of Stage I and Upper Portion of Stage II Inlets) consisting of a filter fabric supported by a metal frame work to prevent sediment and other pollutants from entering convey system.

I. Brush Berm: Brush Berm is constructed at the perimeter of a distribute site within the developing area.

1.05 SUBMITTALS

A. Conform to requirements of Section 01330 - Submittal Procedures.

B. Submit manufacturer's literature for product specifications and installation instructions.

C. Submit manufacturers catalog sheets and other product data on geotextile or filter fabrics, outlet pipe, perforated riser and connectors.

D. Submit proposed methods, equipment, materials, and sequence of operations for storm-water pollution prevention structures.

E. Submit shop drawings for Drop Inlet Baskets.

PART 2 P R O D U C T S

2.01 CONCRETE

A. Concrete: Class B in accordance with Section 03315 – Concrete for Utility Construction or as shown on the Drawings.

2.02 AGREGATE MATERIALS

A. Use poorly graded cobbles with diameter greater than 3 inches and less than 5 inches.

B. Provide gravel lining in accordance with Section 2320 – Utility Backfill Materials or as shown on the drawings.

C. Provide clean cobbles and gravel consisting of crushed concrete or stone. Use clean, hard crushed concrete or stone free from adherent coatings, salt, alkali, dirt, clay, loam, shale, soft or flaky materials, or organic matter.

D. Sediment Pump Pit Aggregate: Use nominal 2-inch diameter river gravel.

2.03 PIPE

A. Polyethylene culvert pipe or PVC sewer pipe in accordance with Section 02505- High Density Polyethylene (HDPE) Solid and Profile Wall Pipe and Section 02506 Polyvinyl Chloride Pipe or as shown on the Drawings.

B. Inlet Pipes: Galvanized steel pipe in accordance with Section 02642 Corrugated Metal Pipe or as shown on the Drawings.

C. Standpipe for Sediment Pump Pits: Galvanized round culvert pipe or round PVC pipe, minimum of 12-inch and a maximum of 24-inch diameter, perforate at 6 to 12 inch centers around circumference.

2.04 GEOTEXTILE FILTER FABRIC

A. Woven or nonwoven geotextile filter fabric made of either polypropylene, polyethylene, ethylene, or polyamide material, in continuous rolls of longest practical length.

B. Grab Strength: 100 psi in any principal direction (ASTM D-4632), Mullen burst strength >200 psi (ASTM D-3786), and equivalent opening size between 50 and 140.

C. Furnish ultraviolet inhibitors and stabilizers for minimum 6 months of expected usable construction life at temperature range of 0 degrees F to 120 degrees F.

D. Mirafi, Inc., Synthetic Industries, or equivalent

2.05 BARRIER

A. Wire Barrier: Woven galvanized steel wire, 14 gauge by 6-inch square mesh spacing, minimum 24 inch roll or sheet width of longest practical length.

B. Barrier Stakes: Nominal 2 by 2 inch moisture-resistant treated wood or steel posts (min. of 1.25 lbs. per linear foot and Brinell Hardness greater than 140) with safety caps on top; length as required for minimum 8 inch bury and full

height of filter fabric.

2.06 SANDBAGS

A. Provide woven material made of polypropylene, polyethylene, or polyamide material.

1. Minimum unit weight of four ounces per square yard.

2. Minimum grab strength of 100 lbs in any principal direction (ASTM D4632)

3. Mullen burst strength exceeding 300 lbs (ASTM D4833).

4. Ultraviolet stability exceeding 70 percent. After 500 hours of exposure (ASTM 4355).

5. Size: Length:18 to 24 inches. Width: 12 to 18 inches. Thickness: 6 to 8 inches. Weight: Approximately 40 to 50 pounds not to exceed 75 pounds.

2.07 Bagged gravel Barrier

1. Minimum unit weight of four ounces per square yard.

2. Minimum grab strength of 100 lbs in any principal direction (ASTM D4632)

3. Mullen burst strength exceeding 300 lbs (ASTM D4833).

4. Ultraviolet stability exceeding 70 percent. After 500 hours of exposure (ASTM 4355).

5. Size: Length:18 to 24 inches. Width: 12 to 18 inches. Thickness: 6 to 8 inches. Weight: Approximately 40 to 50 pounds not to exceed 75 pounds.

2.08 DROP INLET BASKET

A. Provide steel frame members in accordance with ASTM A36.

B. Construct top frame of basket with two short sides of 2 inch by 2 inch and single long side of 1 inch by 1 inch, 1/8 inch angle iron. Construct basket hangers of 2 inch by 1/4 inch iron bars. Construct bottom frame of 1 inch by 1/4 inch iron bar or 1/4 inch plate with center 3 inches removed. Use minimum 1/4 inch diameter iron rods or equivalent for sides of inlet basket.

Weld minimum of 14 rods in place between top frame/basket hanger and bottom frame. Exact dimensions for top frame and insert basket will be determined based on dimensions of type of inlet being protected.

2.09 HAY BALE

A. Hay: Standard-baled agricultural hay bound by wire, nylon, or polypropylene rope. Do not use jute or cotton binding.

B. Hay Bale Stakes (applicable where bales are on soil): No. 3 (3/8 diameter) reinforcing bars, deformed or smooth at Contractor's option, length as required for minimum 18 inch bury and full height bales.

PART 3 E X E C U T I O N

3.01 PREPARATION, INSTALLATION AND MAINTEINANCE

A. Provide erosion and sediment control structures at locations shown on the Drawings.

B. Do not clear, grub or rough cut until erosion and sediment control systems are in place unless approved by Project Manger to allow installation of erosion and sediment control systems, soil testing and surveying.

C. Maintain existing erosion and sediment control systems located within project site until acceptance of Project or until directed by Project Manger to remove and discard existing system.

D. Regularly inspect and repair or replace damaged components of erosion and sediment control structures. Unless otherwise directed, maintain erosion and sediment control structure until project area stabilization is accepted. . Redress and replace granular fill at outlets as needed to replenish depleted granular fill. Remove erosion and sediment control structures promptly when directed by Project Manger. Dispose of materials in accordance with Section 01576 - Waste Material Disposal.

E. Remove and dispose sediment deposits at the designated spoil site for the Project. If a project spoil site is not designated on Drawings, dispose of sediment off site at approved location in accordance with Section 01576 - Waste Material Disposal.

F. Unless otherwise shown on the Drawings, compact embankments, excavations, and trenches in accordance with Section 02315 Roadway

Excavation or Section 2317 Excavation and Backfill for Utilities.

G. Prohibit equipment and vehicles from maneuvering on areas outside of dedicated right of way and easements for construction. Immediately repair damage caused by construction traffic to erosion and sediment control structures.

H. Protect existing trees and plants in accordance with Section 1562 – Tree and Plant Protection.

3.02 SEDIMENT TRAPS

A. Install sediment traps so that surface runoff shall percolate through system in sheet flow fashion and allow retention and accumulation of sediment.

B. Inspect sediment traps after each rainfall, daily during periods of prolonged rainfall, and at a minimum once each week. Repair or replace damaged sections immediately.

C. Use fill material for embankment in accordance with Section 02320 – Utility Backfill Materials.

D. Excavation length and height shall be as specified on Drawings. Use side slopes of 2:1 or flatter.

E. Stone outlet sediment traps:

1. Maintain minimum of 6 inches between top of core material and top of stone outlet, minimum of 4 inches between bottom of core material and existing ground and minimum of 1 foot between top of stone outlet and top of embankment.

2. Embed cobbles minimum of 4 inches into existing ground for stone outlet. Core shall be minimum of 1 foot in height and in width and wrapped in triple layer of geotextile filter fabric.

F. Sediment Basin with Pipe Outlet Construction Methods: Install outlet pipe and riser as shown on the Drawings.

G. Remove sediment deposits when design basin volume is reduced by one-third or sediment level is one foot below principal spillway crest, whichever is less.

3.03 FILTER FABRIC BARRIER CONSTRUCTION METHODS

A. Fence Type 1: Filter Fabric: Barrier

1. Install stakes 3 feet on center maximum and firmly embed minimum 8 inches in soil. If filter fabric is factory preassembled with support netting, then maximum support spacing is 8 feet. Install wood stakes at a slight angle toward the source of anticipated runoff.

2. Trench in the toe of the fence lines so the downward face of the trenches is flat and perpendicular to direction of flow. V-trench configuration as shown on Drawings may also be used.

3. Lay fabric along edges of trenches in longest practical continuous runs to minimize joints. Make joints only at a support post. Splice with minimum 6-inch overlap and seal securely.

4. Staple filter fabric to stakes at maximum 3 inches on center. Extend fabric minimum 18 inches and maximum 36 inches above natural ground.

5. Backfill and compact trench.

B. Barrier Type 2: Reinforced Filter Fabric Barrier

1. Layout barrier same as for Type 1.

2. Install stakes at 6 feet on center maximum and at each joint in wire fence, firmly embedded 1-foot minimum, and inclined it as for Type 1.

3. Tie wire fence to stakes with wire at 6 inches on center maximum. Overlap joints minimum one bay of mesh.

4. Install trench same as for Type 1.

5. Fasten filter fabric wire fence with tie wires at 3 inches on center maximum.

6. Layout fabric same as for Type 1. Fasten to wire fence with wire ties at 3 inches on center maximum and, if applicable, to stakes above top of wire fence it as for Type 1.

7. Backfill and compact trench.

8. Attach filter fabric to wooden fence stakes spaced a maximum of 6 feet apart or steel fence stakes spaced a maximum of 8 feet apart and embedded a minimum of 12 inches. Install stakes at a slight angle toward source of anticipated runoff.

9. Trench in toe of filter fabric barrier with spade or mechanical trencher so that downward face of trench is flat and perpendicular to direction of flow. A V-trench configuration may also be used. Lay filter fabric along edges of trench. Backfill and compact trench upon completion of Construction.

10. Filter fabric fence shall have a minimum height of 18 inches and a maximum height of 36 inches above natural ground.

11. Cut length of fence to minimize use of joints. When joints are necessary, splice fabric together only at support post with minimum 6 inch overlap and seal securely.

12. When used in swales, ditches or diversions, elevation of barrier at top of filter fabric at flow line location in channel shall be lower than bottom elevation of filter fabric at ends of barrier or top of bank, whichever is less, in order to keep storm water discharge in channel from overtopping bank.

C. Triangular Filter Fabric Barrier Construction Methods

1. Attach filter fabric to wire fencing, 18 inches on each side. Provide a fabric cover and skirt with continuous wrapping of fabric. Skirt should form continuous extension of fabric on upstream side of fence.

2. Secure triangular fabric filter barrier in place using one of the following methods:
   a. Toe-in skirt 6 inches with mechanically compacted material;
   b. Weight down skirt with continuous layer of 3-inch to 5-inch graded rock; or
   c. Trench-in entire structure 4 inches.

3. Anchor triangular fabric filter barrier structure and skirt securely in place using 6-inch wire staples on 2-foot centers on both edges and on skirt, or staked using 18-inch by 3/8-inch diameter re-bar with tee ends.

4. Lap fabric filter material by 6 inches to cover segment joints. Fasten joints with galvanized shoat rings.

3.04 DIKE AND SWALE

A. Unless otherwise indicated, maintain minimum dike height of 18 inches, measured from cleared ground at up slope toe to top of dike. Maintain side slopes of 2:1 or flatter.

B. Dike and Swale Stabilization: When shown on the Drawings, place gravel lining 3 inches thick and compacted into the soil or 6 inches thick if truck crossing is expected. Extend gravel lining across bottom and up both sides of swale minimum height of 8 inches vertically, above bottom. Gravel lining on dike side shall extend up the up slope side of dike a minimum height of 8 inches, measured vertically from interface of existing or graded ground and up slope toe of dike, as shown on Drawings.

C. Divert flow from dikes and swales to sediment basins, stabilized outlets, or sediment trapping devices of types and at locations shown on Drawings. Grade dikes and swales as shown on Drawings, or, if not specified, provide positive drainage with maximum grade of 1 percent to outlet or basin.

D. Clear in accordance with Section 2233 – Clearing and Grubbing Compact embankments in accordance with Section 2315 – Roadway Excavation.

E. Carry out excavation for swale construction so that erosion and water pollution is minimal. Minimum depth shall be 1 foot and bottom width shall be 4 feet, with level swale bottom. Excavation slopes shall be 2:1 or flatter. Clear, grub and strip excavation area of vegetation and root material.

3.05 DOWN SPOUT EXTENDER

A. Down spout extender shall have slope of approximately 1 percent. Use pipe diameter of 4 inches or as shown on the Drawings. Place pipe in accordance with Section 2317 - Bedding and Backfill for Utilities.

3.06 PIPE SLOPE DRAIN

A. Compact soil around and under drain entrance section to top of embankment in lifts appropriately sized for method of compaction utilized.

B. Inlet pipe shall have slope of 1 percent or greater. Use pipe diameter as shown on the Drawings.

C. Top of embankment over inlet pipe and embankments directing water to pipe shall be at least 1 foot higher at all points than top of inlet pipe.

D. Pipe shall be secured with hold-down grommets spaced 10 feet on centers.

E. Place riprap apron with a depth equal to pipe diameter with 2:1 side slopes.

3.07 PAVED FLUME

A. Compact soil around and under the entrance section to top of the embankment in lifts appropriately sized for method of compaction utilized.

B. Construct subgrade to required elevations. Remove and replace soft sections and unsuitable material. Compact subgrade thoroughly and shape to a smooth, uniform surface.

C. Construct permanent paved flumes in accordance with Drawings.

D. Remove sediment from riprap apron when sediment has accumulated to depth of one foot.

3.08 LEVEL SPREADER

A. Construct level spreader on undisturbed soil and not on fill. Ensure that spreader lip is level for uniform spreading of storm runoff.

B. Maintain at required depth, grade, and cross section as specified on Drawings. Remove sediment deposits as well as projections or other irregularities which will impede normal flow.

3.09 INLET PROTECTION BARRIER

A. Place sandbags for Stage I, Bagged gravel for Stage II and filter fabric barriers at locations shown on the SWP3. Maintain to allow minimal inlet in flow restrictions / blockage during storm event.

3.10 DROP INLET BASKET CONSTRUCTION METHODS

A. Fit inlet insert basket into inlet without gaps around insert at locations shown on the SWP3.

B. Support for inlet insert basket shall consist of fabricated metal as shown on Drawings.

C. Push down and form filter fabric to shape of basket. Use sheet of fabric large enough to be supported by basket frame when holding sediment and extend at least 6 inches past frame. Place inlet grates over basket/frame to serve as fabric anchor.

D. Remove sediment deposit after each storm event and whenever accumulation exceeds 1-inch depth during weekly inspections.

3.11 HAY BALE FENCE CONSTRUCTION METHODS

A. Place bales in row with ends tightly abutting adjacent bales. Place bales with bindings parallel to ground surface.

B. Embed bale in soil a minimum of 4 inches.

C. Securely anchor bales in place with Hay Bale Stakes driven through bales a minimum of 18-inches into ground. Angle first stake in each bale toward previously laid bale to force bales together.

D. Fill gaps between bales with straw to prevent water from channeling between bales. Wedge carefully in order not to separate bales.

E. Replace with new hay bale fence every two months or as required by Project Manager.

3.12 BRUSH BERM CONSTRUCTION METHODS

A. Construct brush berm along contour lines by hand placing method. Do not use machine placement of brush berm.

B. Use woody brush and branches having diameter less than 2-inches with 6-inches overlap. Avoid incorporation of annual weeds and soil into brush berm.

C. Use minimum height of 18-inches measured from top of existing ground at upslope toe to top of berm. Top width shall be 24 inches minimum and side slopes shall be 2:1 or flatter.

D. Embed brush berm into soil a minimum of 4-inches and anchor using wire, nylon or polypropylene rope across berm with a minimum tension of 50 pounds. Tie rope securely to 18-inch x 3/8-inch diameter rebar stakes driven into ground on 4-foot centers on both sides of berm.

3.13 STREET AND SIDEWALK CLEANING

A. Keep areas clean of construction debris and mud carried by construction vehicles and equipment. If necessary, install stabilized construction exits at construction, staging, storage, and disposal areas, following Section 01575-Stabilized Construction Exit.

B. In lieu of or in addition to stabilized construction exits, shovel or sweep pavements as required to keep areas clean. Do not waterhose or sweep debris and mud off street into adjacent areas, except, hose sidewalks during off-peak hours, after sweeping.

3.14 WASTE COLLECTION AREAS

A. Prevent water runoff from passing through waste collection areas, and prevent water runoff from waste collection areas migrating outside collection areas.

3.15 EQUIPMENT MAINTENANCE AND REPAIR

A. Confine maintenance and repair of construction machinery and equipment to areas specifically designated for that purpose, so fuels, lubricants, solvents, and other potential pollutants are not washed directly into receiving streams or storm water conveyance systems. Provide these areas with adequate waste disposal receptacles for liquid and solid waste. Clean and inspect maintenance areas daily.

B. Where designated equipment maintenance areas are not feasible, take precautions during each individual repair or maintenance operation to prevent potential pollutants from washing into streams or conveyance systems. Provide temporary waste disposal receptacles.

3.16 VEHICLE/ EQUIPMENT WASHING AREAS

A. Install wash area (stabilized with coarse aggregate) adjacent to stabilized construction access, as required to prevent mud and dirt run-off. Release wash water into drainage swales or inlets protected by erosion and sediment controls. Build wash areas following Section 01575- Stabilized Construction access. Install gravel or rock base beneath wash areas.

B. Wash vehicles only at designated wash areas. Do not wash vehicles such as concrete delivery trucks or dump trucks and other construction equipment at locations where runoff flows directly into waterways or storm water conveyance systems.

C. Locate wash areas to spread out and evaporate or infiltrate wash water directly into ground, or collect runoff in temporary holding or seepage basins.

3.17 WATER RUNOFF AND EROSION CONTROL

A. Control surface water, runoff, subsurface water, and water from excavations and structures to prevent damage to the Work, the site, or adjoining properties. Follow environment requirements.

B. Control fill, grading and ditching to direct water away from excavations, pits, tunnels, and other construction areas, and to direct drainage to proper runoff courses to prevent erosion, sedimentation or damage.

C. Provide, operate, and maintain equipment and facilities of adequate size to control surface water.

D. Retain existing drainage patterns external to the site by constructing temporary earth berms, sedimentation basins, retaining areas, and temporary ground cover as required to control conditions.

E. Plan and execute construction and earth work to control surface drainage from cuts and fills, and from borrow and waste disposal areas, to prevent erosion and sedimentation.

1. Hold area of bare soil exposed at one time to a minimum.

2. Provide temporary controls such as berms, dikes, and drains.

F. Construct fill and waste areas by selective placement to eliminate surface silts or clays which will erode.

G. Inspect earthwork periodically to detect start of erosion. Immediately apply corrective measures as required to control erosion.

H. Dispose of sediments offsite, not in or adjacent to waterways or floodplains, nor allow sediments to flush into streams or drainage ways. Assume responsibility for offsite disposal location.

I. Unless otherwise indicated, compact embankments, excavations, and trenches by mechanically blading, tamping, and rolling soil in maximum of 8-inch layers. Provide compaction density at minimum 90 percent Standard Proctor ASTM D-698-78 density. Make at least one test per 500 cubic yards of embankment.

J. Prohibit equipment and vehicles from maneuver on areas outside of dedicated rights-of-way and easements for construction. Immediately repair damage to erosion and sedimentation control systems caused by construction traffic.

K. Do not damage existing trees intended to remain.

3.18 REMOVAL OF CONTROLS

A. Remove erosion and sediment controls when the site is finally stabilized or as directed by Project Manager.

B. Dispose of sediments and waste products following Section 01505-Temporary Facilities.

END OF SECTION

Section 01576

WASTE MATERIAL DISPOSAL

PART 1 G E N E R A L

1.01 SECTION INCLUDES

A. Disposal of waste material and salvageable material.

1.02 SUBMITTALS

A. Conform to requirements of Section 01330 - Submittal Procedures.

B. Submit copy of approved "Development Permit", as defined in Chapter 19 of Flood Plain Ordinance (City Ordinance Number 81-914 and Number 85-1705), prior to disposal of excess material in areas designated as being in "100-year Flood Hazard Area" within the City. Contact the City of Houston Flood Plain Manager, 3300 Main Street, at (713) 525-7605 for flood plain information.

C. Obtain and submit disposal permits for proposed disposal sites, if required by local ordinances.

D. Submit copy of written permission from property owner, with description of property, prior to disposal of excess material adjacent to Project. Submit written and signed release from property owner upon completion of disposal work.

E. Describe waste materials expected to be stored on-site and a description of controls to reduce Pollutants from these materials, including storage practices to minimize exposure of materials to storm water; and spill prevention and response measures in the Project's Storm Water Pollution Prevention Plan (SWPPP). Refer to Section 01410 – TPDES Requirements.

PART 2 P R O D U C T S - Not Used

PART 3 E X E C U T I O N

3.01 SALVAGEABLE MATERIAL

A. Excavated Material: When indicated on Drawings, load, haul, and deposit excavated material at location or locations shown on Drawings outside limits of Project.

B. Base, Surface, and Bedding Material: Load shell, gravel, bituminous, or other base and surfacing material designated for salvage into City trucks.

C. Pipe Culvert: Load culverts designated for salvage into City trucks.

D. Other Salvageable Materials: Conform to requirements of individual Specification Sections.

E. Coordinate loading of salvageable material on City trucks with Project Manager.

3.02 EXCESS MATERIAL

A. Remove and legally dispose of vegetation, rubble, broken concrete, debris, asphaltic concrete pavement, excess soil, and other materials not designated for salvage from job site.

B. Excess soil may be deposited on private property adjacent to Project when written permission is obtained from property owner. See Paragraph 1.02 D above.

C. Verify flood plain status of any proposed disposal site. Do not dispose of excavated materials in area designated as within 100-year Flood Hazard Area unless "Development Permit" has been obtained. Remove excess material placed in "100-year Flood Hazard Area" within the City, without "Development Permit", at no additional cost to the City.

D. Remove waste materials from site daily, in order to maintain site in neat and orderly condition.

END OF SECTION

Section 01578

CONTROL OF GROUND AND SURFACE WATER

PART 1 GENERAL

1.01 SECTION INCLUDES

A. Dewatering, depressurizing, draining, and maintaining trenches, shaft excavations, structural excavations and foundation beds in stable condition, and controlling ground water conditions for tunnel excavations.

B. Protecting work against surface runoff and rising floodwaters.

C. Trapping suspended sediment in the discharge form the surface and ground water control systems.

1.02 MEASUREMENT AND PAYMENT

A. UNIT PRICES

1. When noted, dewatering of trench or excavation during course of project shall be measured per linear foot and paid for at contract unit prices for dewatering, when directed to perform such work by Project Manager. Dewatering must be fully detailed in submittal and submittal must be approved prior to performing dewatering work before payment will be made for dewatering. No payment will be made for work unless directed to perform work by Project Manager.

2. Presence of a pump on project does not constitute dewatering for payment under bid item "Ground Water Control for Open Cut Construction."

3. Dewatering required during course of project to lower water table for other utility installation less than 24 inches in diameter, construction of structures, removal of standing water, surface drainage seepage, or to protect against rising waters or floods shall be considered incidental to Work unless otherwise noted.

4. No separate payment will be made for groundwater control associated with augering, tunnels or casing. Include cost in unit price for augering.

5. Refer to Section 01270 - Measurement and Payment for unit price procedures.

B. Stipulated Price (Lump Sum) Contract. If the Contract is a Stipulated Price Contract, include payment for work under this section in the total Stipulated

Price.

1.03 REFERENCES

A. ASTM D 698 - Standard Test Methods for Laboratory Compaction of Soils Using Standard Effort (12,400 ft-lbf/ft3 (600kN-m/m3)

B. Federal Regulations, 29 CFR Part 1926, Standards-Excavation, Occupational Safety and Health Administration (OSHA)

C. Storm Water Management Handbook for Construction Activities prepared by City of Houston, Harris County and Harris County Flood Control District.

1.04 DEFINITIONS

A. Ground water control system: system used to dewater and depressurize water-bearing soil layers.

1. Dewatering: lowering the water table and intercepting seepage that would otherwise emerge from slopes or bottoms of excavations, or into tunnels and shafts; and disposing of removed water. Intent of dewatering is to increase stability of tunnel excavations and excavated slopes, prevent dislocation of material from slopes or bottoms of excavations, reduce lateral loads on sheeting and bracing, improve excavating and hauling characteristics of excavated material, prevent failure or heaving of bottom of excavations, and to provide suitable conditions for placement of backfill materials and construction of structures and other installations.

2. Depressurization: includes reduction in piezometric pressure within strata not controlled by dewatering alone, necessary to prevent failure or heaving of excavation bottom or instability of tunnel excavations.

B. Excavation drainage: includes keeping excavations free of surface and seepage water.

C. Surface drainage: includes use of temporary drainage ditches and dikes and installation of temporary culverts and sump pumps with discharge lines necessary to protect Work from any source of surface water.

D. Monitoring facilities for ground water control system: includes piezometers, monitoring wells and flow meters for observing and recording flow rates.

1.05 PERFORMANCE REQUIREMENTS

A. Conduct subsurface investigations to identify groundwater conditions and to

provide parameters for design, installation, and operation of groundwater control systems. Submit proposed method and spacing of readings for review prior to obtaining water level readings.

B. Design ground water control system, compatible with requirements of Federal Regulations 29 CFR Part 1926 and Section 02260 - Trench Safety Systems, to produce following results:

1. Effectively reduce hydrostatic pressure affecting:

   a. Excavations

   b. Tunnel excavation, face stability or seepage into tunnels

2. Develop substantially dry and stable subgrade for subsequent construction operations

3. Preclude damage to adjacent properties, buildings, structures, utilities, installed facilities and other work

4. Prevent loss of fines, seepage, boils, quick condition, or softening of foundation strata

5. Maintain stability of sides and bottom of excavations

C. Provide ground water control systems that include single-stage or multiple-stage well point systems, eductor and ejector-type systems, deep wells, or combinations of these equipment types.

D. Provide drainage of seepage water and surface water, as well as water from other sources entering excavation. Excavation drainage may include placement of drainage materials, crushed stone and filter fabric, together with sump pumping.

E. Provide ditches, berms, pumps and other methods necessary to divert and drain surface water from excavation and other work areas.

F. Locate ground water control and drainage systems so as not to interfere with utilities, construction operations, adjacent properties, or adjacent water wells.

G. Assume sole responsibility for ground water control systems and for any loss or damage resulting from partial or complete failure of protective measures and settlement or resultant damage caused by ground water control operations. Modify ground water control systems or operations if they cause or threaten to cause damage to new construction, existing site improvements, adjacent property, adjacent water wells, or potentially contaminated areas. Repair damage caused by ground water control systems or resulting from

failure of system to protect property as required.

H. Install an adequate number of piezometers installed at proper locations and depths, necessary to provide meaningful observations of conditions affecting excavation, adjacent structures and water wells.

I. Install environmental monitoring wells at proper locations and depths necessary to provide adequate observations of hydrostatic conditions and possible contaminant transport from contamination sources into work area or ground water control system.

1.06 SUBMITTALS

A. Conform to requirements of Section 01330 - Submittals Procedures.

B. Submit Ground Water and Surface Water Control Plan for review by Project Manager prior to start of excavation work. Include the following:

1. Results of subsurface investigations and description of extent and characteristics of water bearing layers subject to ground water control

2. Names of equipment Suppliers and installation Subcontractors

3. Description of proposed ground water control systems indicating arrangement, location, depth and capacities of system components, installation details and criteria and operation and maintenance procedures

4. Description of proposed monitoring facilities indicating depths and locations of piezometers and monitoring wells, monitoring installation details and criteria, type of equipment and instrumentation with pertinent data and characteristics

5. Description of proposed filters including types, sizes, capacities and manufacturer's application recommendations

6. Design calculations demonstrating adequacy of proposed systems for intended applications. Define potential area of influence of ground water control operation near contaminated areas.

7. Operating requirements, including piezometric control elevations for dewatering and depressurization

8. Excavation drainage methods including typical drainage layers, sump pump application and other means

9. Surface water control and drainage installations

10. Proposed methods and locations for disposing of removed water

C. Submit following records upon completion of initial installation:

1. Installation and development reports for well points, eductors, and deep wells

2. Installation reports and baseline readings for piezometers and monitoring wells

3. Baseline analytical test data of water from monitoring wells

4. Initial flow rates

D. Submit the following records weekly during control of ground and surface water operations:

1. Records of flow rates and piezometric elevations obtained during monitoring of dewatering and depressurization. Refer to Paragraph 3.02, Requirements for Eductor, Well Points, or Deep Wells.

2. Maintenance records for ground water control installations, piezometers and monitoring wells

1.07 ENVIRONMENTAL REQUIREMENTS

A. Comply with requirements of agencies having jurisdiction.

B. Comply with Texas Commission on Environmental Quality regulations and Texas Water Well Drillers Association for development, drilling, and abandonment of wells used in dewatering system.

C. Obtain necessary permits from agencies with jurisdiction over use of groundwater and matters affecting well installation, water discharge, and use of existing storm drains and natural water sources. Since review and permitting process may be lengthy, take early action to obtain required approvals.

D. Monitor ground water discharge for contamination while performing pumping in vicinity of potentially contaminated sites.

PART 2 P R O D U C T S

2.01 EQUIPMENT AND MATERIALS

A. Select equipment and materials necessary to achieve desired results for dewatering. Selected equipment and materials are subject to review by Project Manager through submittals required in Paragraph 1.06, Submittals.

B. Use experienced contractors, regularly engaged in ground water control system design, installation, and operation, to furnish and install and operate educators, well points, or deep wells, when needed

C. Maintain equipment in good repair and operating condition.

D. Keep sufficient standby equipment and materials available to ensure continuous operation, where required.

E. Portable Sediment Tank System: Standard 55-gallon steel or plastic drums, free of hazardous material contamination.

1. Shop or field fabricate tanks in series with main inlet pipe, inter-tank pipes and discharge pipes, using quantities sufficient to collect sediments from discharge water.

PART 3 E X E C U T I O N

3.01 GROUND WATER CONTROL

A. Perform necessary subsurface investigation to identify water bearing layers, piezometric pressures and soil parameters for design and installation of ground water control systems. Perform pump tests, if necessary to determine draw down characteristics. Present results in the Ground Water and Surface Water Control Plan. submittal

B. Provide labor, material, equipment, techniques and methods to lower, control and handle ground water in manner compatible with construction methods and site conditions. Monitor effectiveness of installed system and its effect on adjacent property.

C. Install, operate, and maintain ground water control systems in accordance with the Ground Water and Surface Water Control Plan. Notify Project Manager in writing of changes made to accommodate field conditions and changes to Work. Provide revised drawings and calculations with notification.

D. Provide continuous system operation, including nights, weekends, and holidays. Arrange appropriate backup if electrical power is primary energy source for dewatering system.

E. Monitor operations to verify systems lower ground water piezometric levels at rate required to maintain dry excavation resulting in stable subgrade for

subsequent construction operations.

F. Depressurize zones where hydrostatic pressures in confined water bearing layers exist below excavations to eliminate risk of uplift or other instability of excavation or installed works. Define allowable piezometric elevations in the Ground Water and Surface Water Control Plan.

G. Removal of ground water control installations.

1. Remove pumping system components and piping when ground water control is no longer required.

2. Remove piezometers, including piezometers installed during design phase investigations and left for Contractor's use, upon completion of testing, as required in accordance with Part 3 of applicable specification.

3. Remove monitoring wells when directed by Project Manager.

4. Grout abandoned well and piezometer holes. Fill piping that is not removed with cement-bentonite grout or cement-sand grout.

H. During backfilling, maintain water level a minimum of 5 feet below prevailing level of backfill. Do not allow the water level to cause uplift pressures in excess of 80 percent of downward pressure produced by weight of structure or backfill in place. Do not allow water levels to rise into cement-stabilized sand until at least 48 hour after placement.

I. Provide uniform pipe diameter for each pipe drain run constructed for dewatering. Remove pipe drains when no longer required. If pipe removal is impractical, grout connections at 50-foot intervals and fill pipe with cement-bentonite grout or cement-sand grout after removal from service.

J. The extent of ground water control for structures with permanent perforated underground drainage systems may be reduced, for units designed to withstand hydrostatic uplift pressure. Provide a means to drain affected portions of underground systems, including standby equipment. Maintain drainage systems during construction operations.

K. Remove systems upon completion of construction or when dewatering and control of surface or ground water is no longer required.

L. Compact backfill to not less than 95 percent of maximum dry density in accordance with ASTM D 698.

M. Foundation Slab: Maintain saturation line at least 3 feet below lowest elevations where concrete is to be placed. Drain foundations in areas where

concrete is to be placed before placing reinforcing steel. Keep free from water for 3 days after concrete is placed.

3.02 REQUIREMENTS FOR EDUCTOR, WELL POINTS, OR DEEP WELLS

A. For aboveground piping in ground water control system, include a 12-inch minimum length of clear, transparent piping between each eductor well or well point and discharge header to allow visual monitoring of discharge from each installation.

B. Install sufficient piezometers or monitoring wells to show that trench or shaft excavations in water bearing materials are pre-drained prior to excavation. Provide separate piezometers for monitoring of dewatering and for monitoring of depressurization. Install piezometers and monitoring wells for tunneling as appropriate for selected method of work.

C. Install piezometers or monitoring wells at least one week in advance of the start of associated excavation.

D. Dewatering may be omitted for portions of under drains or other excavations, where auger borings and piezometers or monitoring wells show that soil is pre-drained by existing systems and that ground water control plan criteria are satisfied.

E. Replace installations that produce noticeable amounts of sediments after development.

F. Provide additional ground water control installations, or change method of control if, ground water control plan does not provide satisfactory results based on performance criteria defined by plan and by specifications. Submit revised plan according to Paragraph 1.06B.

3.03 SEDIMENT TRAPS

A. Install sediment tank as shown on approved plan.

B. Inspect daily and clean out tank when one-third of sediment tank is filled with sediment.

3.04 SEDIMENT SUMP PIT

A. Install sediment sump pits as shown on approved plan.

B. Construct standpipe by perforating 12 inch to 24-inch diameter corrugated metal or PVC pipe.

C. Extend standpipe 12 inches to 18 inches above lip of pit.

D. Convey discharge of water pumped from standpipe to sediment trapping device.

E. Fill sites of sump pits, compact to density of surrounding soil and stabilize surface when construction is complete.

3.05 EXCAVATION DRAINAGE

A. Use excavation drainage methods if well-drained conditions can be achieved. Excavation drainage may consist of layers of crushed stone and filter fabric, and sump pumping, in combination with sufficient ground water control wells to maintain stable excavation and backfill conditions.

3.06 MAINTENANCE AND OBSERVATION

A. Conduct daily maintenance and observation of piezometers or monitoring wells while ground water control installations or excavation drainage is operating at the site, or water is seeping into tunnels, and maintain systems in good operating condition.

B. Replace damaged and destroyed piezometers or monitoring wells with new piezometers or wells as necessary to meet observation schedules.

C. Cut off piezometers or monitoring wells in excavation areas where piping is exposed, only as necessary to perform observation as excavation proceeds. Continue to maintain and make specified observations

D. Remove and grout piezometers inside or outside of excavation area when ground water control operations are complete. Remove and grout monitoring wells when directed by Project Manager.

3.07 MONITORING AND RECORDING

A. Monitor and record average flow rate of operation for each deep well, or for each wellpoint or eductor header used in dewatering system. Also, monitor and record water level and ground water recovery. Record observations daily until steady conditions are achieved and twice weekly thereafter.

B. Observe and record elevation of water level daily as long as ground water control system is in operation, and weekly thereafter until Work is completed or piezometers or wells are removed, except when Project Manager determines more frequent monitoring and recording are required. Comply with Project Manager's direction for increased monitoring and recording and

take measures necessary to ensure effective dewatering for intended purpose.

3.08 SURFACE WATER CONTROL

A. Intercept surface water and divert it away from excavations through use of dikes, ditches, curb walls, pipes, sumps or other approved means. Requirement includes temporary works required to protect adjoining properties from surface drainage caused by construction operations.

B. Divert surface water and seepage water into sumps and pump it into drainage channels or storm drains, when approved by agencies having jurisdiction. Provide settling basins when required by agencies.

END OF SECTION

Section 01580

PROJECT IDENTIFICATION SIGNS

PART 1 G E N E R A L

1.01 SECTION INCLUDES

A. Project identification sign description.

B. Project sign installation.

C. Maintenance and removal of Project sign.

1.02 SYSTEM DESCRIPTION

A. Sign Construction: Construct signs of new materials in accordance with Standard Detail provided at the Pre-construction Conference.

B. Appearance: Maintain signs to present a clean and neat look throughout contract duration.

C. Sign Manufacturer: Experienced professional sign company.

D. Sign Placement: At locations shown in Drawings unless otherwise specified by Project Manager at pre-construction meeting.

1. Provide one sign at each end of a linear Project involving paving, overlay, sewer line, storm drainage, or water main construction located in rights-of-ways.

2. Provide one sign for site or building construction Contracts

3. Provide one sign at each site for Contracts with multiple sites.

4. Sign Relocation: As work progresses, relocate signs if directed by Project Manager in writing. Include cost for one relocation of post-mounted signs in Contract Price. Subsequent relocations, if directed by Project Manager in writing, will be subject to Change Order.

E. Skid-mounted signs: Use for projects with noncontiguous locations where work progresses from one location to another. Design skid structure to withstand a 60 mile-per-hour wind load to the face or back of sign using stakes, straps, or ballast. Contractor shall be responsible for security of signs at each site.

1.03 SUBMITTALS

A. Submit Shop Drawings under provisions of Section 01330 - Submittal procedures.

B. Show content, layout, lettering style, lettering size, and colors. Make sign and lettering to scale, clearly indicating condensed lettering, if used.

PART 2 P R O D U C T S

2.01 SIGN MATERIALS

A. Structure and Framing: Use new sign materials.

1. Sign Posts: 4-inch by 4-inch pressure treated wood posts, 9 feet long for skid mounting and 12 feet long minimum for in-ground mounting.

2. Skid Bracing: 2-inch by 4-inch wood framing material.

3. Skid Members: 2-inch by 6-inch wood framing material.

4. Fasteners:
   a. Galvanized steel.
   b. Attach sign to posts with 1/2-inch by 5-1/2 inch button head carriage bolts and secure with nuts and flat head washers.
   c. Cover button heads with white reflective film or paint to match sign background.
   d. Use metal brackets and braces and 3/4-inch wood screws to attach sign header.

B. Sign and Sign Header: 3/4-inch thick marine plywood. Use 4-foot by 8 -foot sheet for the sign and a single piece for the header to minimize joints. Do not piece wood sheets to fabricate sign face.

C. Paint and Primers: White industrial grade, fast-drying, oil-based paint with gloss finish for structural and framing members, sign, and sign header material surfaces. Paint all sign surfaces prior to adding adhesive applications.

D. Colors:

1. Sign Background: Reflective white 3M Scotchlite Engineer Grade, Pressure Sensitive Sheeting (White), or approved equal.

2. Border: For red border around area, which designates project name and project amount, use reflective red 3M Scotchlite Engineer Grade, Pressure Sensitive Sheeting (Red), or approved equal.

3. Sign Film: 3M Scotchcal Pressure Sensitive Films, or approved equal for legends, symbols, lettering, and artwork. Match colors to 3M Scotchcal Pressure Sensitive Films.

a.	Lettering Below Seal:	Black
b.	Lettering Above Project Name:	Vivid Blue
c.	Lettering on Blue Background:	White
d.	Background Behind Project Name:	Vivid Blue

E. City Seal: Project Manager will provide City seals to Contractor, as needed.

2.02 SIGN LAYOUT

A. Lettering:

1. Style, Size, and Spacing: Helvetica Regular lettering.

2. Condensed Style: Text may be condensed if needed to maintain sign composition.

B. Composition:

1. Lines with Standard Text
   a. Top line shall read "BUILDING TOGETHER FOR THE FUTURE".
   b. Use lower left below City Seal to list names and titles for Mayor, Controller and Council Members. Place as shown on Drawings with indicated size and spacing.
   c. Center telephone number of the Customer Response Center, "311", near the bottom of the area with the blue background.

2. Lines with Variable Text. Use blue background space for Project name and dollar amount.
   a. Project Manager will provide Project name and dollar amount of Project for preparation of sign. Center name on one or two lines, and dollar amount immediately below Project name, in area with blue background. Use condensed lettering if necessary.

2.03 LAYOUT AND COMPOSITION FOR HEADER

A. City of Houston Seal:
   1. A space of approximately 24 inches in diameter is provided for the City seal, the top 6 inches of which extends above the sign on the sign header.

   2. Construct sign header of same material as sign face. Cut material to match curve of the City seal.

   3. Project Manager will provide the seal to be affixed to the sign by sign maker.

PART 3 E X E C U T I O N

3.01 INSTALLATION

A. Install Project identification signs within seven days after Date of Commencement of the Work.

B. Erect signs at locations shown in Drawings unless otherwise designated by Project Manager at pre-construction meeting. Position sign so it is fully visible and readable to general public.

C. Erect sign level and plumb.

D. If mounted on posts, sink posts 3 to 4 feet below grade and stabilize posts to minimize lateral motion. Leave a minimum of 8 feet of post above existing grade for mounting of sign.

E. Erect sign so that top edge of sign is at a nominal 8 feet above existing grade.

3.02 MAINTENANCE AND REMOVAL

A. Keep signs and supports clean. Repair deterioration and damage.

B. Remove signs, framing, supports, and foundations to a depth of at least 2 feet upon completion of Project. Restore area to a condition equal to or better than before construction.

PROJECT No.: (FILE NO:)	CONTRACT No.:	REVIEWED BY:

*INSTRUCTIONS TO SIGN MAKER (LIST COMPANY NAME):		
QTY.	**ACTION ITEMS:**	
	Make new sign(s)	
	Follow City standards attached	
	Provide submittal (drawing) to the City for project sign showing content, layout, lettering style, lettering size, and colors	
VARIABLE TEXT		
Line 1	Project Name:	
Line 2	Project Amount (rounded to nearest $1000):	
ATTACHMENTS INCLUDED		
QTY.	**SEALS / LOGOS**	
	City of Houston - 24" diameter	
	STANDARDS	
	Standard Specification Section 01580 - Project Identification Signs	
	Standard Detail 01580-03 Construction Sign	

(Instructions on reverse.)

INSTRUCTIONS

Contractor produces this form. Contractor shall insert the information and provide the form to the sign maker with Contractor's purchase order.

List PROJECT No., (FILE No.), CONTRACT No., and name of City's Project Manager REVIEWED BY.

INSTRUCTIONS TO SIGN MAKER:

- Give COMPANY NAME of sign maker.
- Indicate QUANTITY of new signs to be made.
- Direction for sign maker to follow City Standards in making signs.
- Require submittals from sign maker, who provides Shop Drawing of Project sign showing content, layout, lettering style, lettering size, and colors.

VARIABLE TEXT:

- Give PROJECT NAME. Write it out in all caps and suggest line break. Lines are required.
- Give Project amount to be listed on sign. Round off to nearest $1000.

ATTACHMENTS INCLUDED:

- **Seals**

  City provides the quantity of City seals required one for each Project sign.

- **Standards**

  Contractor provides set of Standards to sign maker, including (Specification Section 01580 - Project Identification Signs, and Standard Detail No. 01580-03 - Construction Sign.

Section 01610

BASIC PRODUCT REQUIREMENTS

PART 1 G E N E R A L

1.01 SECTION INCLUDES

A. Requirements for transportation, delivery, handling, and storage of Products.

1.02 PRODUCTS

A. Products: Defined in Document 00700 – General Conditions. Does not include machinery and equipment used for preparation, fabrication, conveying and erection of the Work. Products may also include existing materials or components designated for reuse.

B. For material and equipment specifically indicated or specified to be reused in the work:

1. Use special care in removal, handling, storage and reinstallation, to assure proper function in completed work.

2. Arrange for transportation, storage and handling of products which require off-site storage, restoration or renovation. Include cost in unit price for related items.

C. When contract documents require that installation of work comply with manufacturer's printed Instructions, obtain and distribute copies of such instructions to parties involved in installation, including two copies to Project Manager. Maintain one set of complete instructions at job site during installation until completion.

D. Provide Products from the fewest number of manufacturers as practical, in order to simplify spare parts inventory and to allow for maximum interchangeability of components. For multiple components of the same size, type or application, use the same make and model of component throughout the Work.

1.03 TRANSPORTATION

A. Make arrangements for transportation, delivery, and handling of Products required for timely completion of the Work.

B. Transport and handle Products in accordance with manufacturer's instructions.

C. Consign and address shipping documents to proper party giving name of the Project and its complete street address. Shipments shall be delivered to

Contractor.

1.04 DELIVERY

A. Arrange deliveries of Products to accommodate short-term site completion schedules and in ample time to facilitate inspection prior to Installation. Avoid deliveries that cause lengthy storage or overburden of limit storage space.

B. Coordinate deliveries to avoid conflict with the Work and conditions at the site and to accommodate the following:

1. Work of other contractors or the City.

2. Limitations of storage space.

3. Availability of equipment and personnel for handling Products.

4. The City's use of premises.

C. Have Products delivered to the site in manufacturer's original, unopened, labeled containers.

D. Immediately upon delivery, inspect shipment to assure:

1. Product complies with requirements of the Contract.

2. Quantities are correct.

3. Containers and packages are intact; labels are legible.

4. Products are properly protected and undamaged.

1.05 PRODUCT HANDLING

A. Coordinate off-loading of Products delivered to the site. If necessary during construction, move and relocate stored Products at no additional cost to the City.

B. Provide equipment and personnel necessary to handle Products, including those provided by the City, by methods to prevent damage to Products or packaging.

C. Provide additional protection during handling as necessary to prevent breaking, scraping, marring, or otherwise damaging Products or surrounding areas.

D. Handle Products by methods to prevent over-bending or overstressing.

E. Lift heavy components only at designated lifting points.

F. Handle Products in accordance with manufacturer's recommendations.

G. Do not drop, roll, or skid Products off delivery vehicles. Hand-carry or use Suitable materials handling equipment.

1.06 STORAGAE OF PRODUCTS

A. Store and protect Products in accordance with manufacturer's recommendations and requirements of these Specifications.

B. Make necessary provisions for safe storage of Products. Place Products so as to prevent damage to any part of the Work or existing facilities and to maintain free access at all times to all parts of the Work and to utility service company installations in the vicinity of the Work. Keep Products neatly and compactly stored in locations that will cause minimum inconvenience to other contractors, public travel, adjoining owners, tenants, and occupants. Arrange storage in a manner so as to provide easy access for inspection.

C. Restrict storage to areas available on the site for storage of Products as shown on Drawings or approved by Project Manager.

D. Provide off-site storage and protection when on-site storage is not adequate. Provide addresses of, and access to, off-site storage locations for inspection by Project Manager.

E. Do not use lawns, grass plots, or other private property for storage purposes without written permission of owner or other person in possession or control of premises.

F. Protect stored Products against loss or damage.

G. Store in manufacturers' unopened containers.

H. Neatly, safely, and compactly stack Products delivered and stored along the line of the Work to avoid inconvenience and damage to property owners and general public, and maintain at least 3 feet clearance around fire hydrants. Keep public, private driveways and street crossings open.

I. Repair or replace damaged lawns, sidewalks, streets or other improvements to satisfaction of Project Manager. Total length that Products may be distributed along route of construction at one time is 1000 linear feet, unless otherwise approved in writing by Project Manager.

PART 2 P R O D U C T S - Not Used

PART 3 E X E C U T I O N - Not Used

END OF SECTION

Section 01630

PRODUCT SUBSTITUTION PROCEDURES

PART 1 G E N E R A L

1.01 SECTION INCLUDES

A. Options for making Product or process selections.

B. Procedures for proposing equivalent Products or processes, including pre-approved, pre-qualified, and approved Products or processes.

1.02 DEFINITIONS

A. Product: As defined in Document 00700 – General Conditions. Product does not include machinery and equipment used for production, fabrication, conveying, and erection of the Work. Products may also include existing materials or components designated for reuse.

B. Process: Any proprietary system or method for installing system components resulting in an integral, functioning part of the Work. For this Section, the word Products includes Processes.

1.03 SELECTION OPTIONS

A. Pre-approved Products: Construction products of certain manufacturers or Suppliers designated in Specifications as "pre-approved." The City maintains a list of pre-approved products. Pre-approved Products for this Project are designated as pre-approved in Specifications. Products of other manufacturers or suppliers are not acceptable for this Project and will not be considered under the submittal process for approving alternate products.

B. Pre-qualified Products: Construction products of certain manufacturers or Suppliers designated in Specifications as "pre-qualified." Pre-qualified Products for this Project are designated as pre-qualified in Specifications. Products of other manufacturers or suppliers are not acceptable for this Project and will not be considered under the submittal process for approving alternate products.

C. Approved Products: Construction products of certain manufacturers or Suppliers designated in Specifications followed by words "or approved equal." Approval of alternate products not listed in Specifications may be obtained through provisions for product options and substitutions in Document 00700 - General Conditions, and by following submittal procedures specified in

Section 01330- Submittal Procedures. The procedure for approval of alternate products is not applicable to pre-approved or pre-qualified products.

D. Product Compatibility: To the maximum extent possible, provide Products that are of the same type or function from a single manufacturer, make, or source. Where more than one choice is available, select Product that is compatible with other Products already selected, specified, or in use by the City.

1.04 CONTRACTOR'S RESPONSIBILITY

A. Responsibility related to Product options and substitutions is defined in Document 00700 - General Conditions.

B. Furnish information Project Manager deems necessary to judge equivalency of alternate Product.

C. Pay for laboratory testing, as well as any other review or examination costs, needed to establish equivalency between products in order to obtain information upon which Project Manager can base a decision.

D. If Project Manager determines alternate product is not equal to that named in Specifications, Furnish one of the specified Products.

1.05 CITY REVIEW

A. Use alternate Products only when approved in writing by Project Manager. Project Manager's determination regarding acceptance of proposed alternate Product is final.

B. Alternate Products shall be accepted if Products are judged by Project Manager to be equivalent to specified Product or to offer substantial benefit to the City.

C. The City retains the right to accept any Product deemed advantageous to the City, and similarly, to reject any product deemed not beneficial to City.

1.06 SUBSTITUTION PROCEDURE

A. Collect and assemble technical information applicable to the proposed Product to aid in determining equivalency as related to the approved Product specified.

B. Submit a written request for a construction Product to be considered as an alternate Product.

C. Submit Product information after the effective date of the Contract and within the time period allowed for substitution submittals given in Document 00700 - General Conditions. After the submittal period has expired, requests for alternate Products shall be considered only when specified Product becomes unavailable because of conditions beyond Contractor's control.

D. Submit five copies of each request for alternate Product approval. Include the following information:

1. Complete data substantiating compliance of proposed substitution with the Contract.

2. For Products:
   a. Product identification, including manufacturer's name and address.
   b. Manufacturer's literature with Product description, performance and test data, and reference standards.
   c. Samples, as applicable.
   d. Name and address of similar projects on which Product was used and date of installation. Include names of Owner, design consultant, and installing contractor.

3. For construction methods:
   a. Detailed description of proposed method.
   b. Drawings illustrating methods.

4. Itemized comparison of proposed substitution with Product or method specified.

5. Data relating to changes in Construction Schedule.

6. Relation to separate contracts, if any.

7. Accurate cost data on proposed substitution in comparison with Product or method specified.

8. Other information requested by Project Manager.

E. Approved alternate Products will be subject to the same review process as the specified Product would have been for Shop Drawings, Product Data, and Samples.

PART 2 P R O D U C T S - Not Used

PART 3 E X E C U T I O N - Not Used

END OF SECTION

SECTION 01650

EQUIPMENT NOMENCLATURE, DATA IDENTIFICATION AND DATA INPUT

PART 1 GENERAL

1.01 DESCRIPTION

A. Nomenclature labels shall be as indicated or specified in Paragraph 1.06 below, and as shown on the Drawings. Nomenclature for facilities, systems, equipment and valves shall be used on all correspondence, submittals, and nameplates as described below.

B. Use the nomenclature labels indicated or specified in all transactions, including correspondences and submittals. If a nomenclature label is not specified or indicated, notify the CM. The CM will assign additional nomenclature labels, where appropriate. Contractor will provide non- specified labels at no additional cost to the City.

C. Labels for painted piping and painted equipment provided under Section 09905 are not part of this Section.

D. Nomenclature and tagging for items provided under Division 13 are part of this section and shall be in accordance with the requirements specified in this Section.

E. Nomenclature and tagging for valves provided under Division 15 are part of this section and shall be in accordance with the requirements of this Section.

F. Nomenclature and tagging for electrical items provided under Division 16 are part of this section and shall be in accordance with the requirements of this Section.

G. In addition to the numbering system specified, the City maintains a Computerized Maintenance Management System (CMMS) that utilizes an Asset Identification and Tagging System nomenclature. The Asset Identification and Tagging System nomenclature is to be used ONLY on Technical Data Forms and should NOT appear on any tags specified under Paragraph 1.06.

H. Fill out and submit completed Technical Data Forms.

1.02 MEASUREMENT AND PAYMENT

A. No separate payment will be made for work provided under this section.

B. Include the cost for this work in the lump sum Stipulated Price, in Section 00410, Part B, Paragraph 1.0 B1 and B2.

1.03 RELATED WORK

A. Submittals are included in Section 01330.

B. Contractor Quality Control is included in Section 01450.

C. Equipment Checkout, Field Testing and Functional Testing are included in Section 01665.

D. Closeout Procedures are included in Section 01770.

E. Operation and Maintenance Data is included in Section 01782.

1.04 SUBMITTALS

A. Submit, in accordance with Section 01330, the following:
   1. Technical Data Forms for equipment and systems requiring such forms, as specified.

1.05 QUALITY ASSURANCE

A. Provide in accordance with Section 01450.

B. Documents (letters, Requests for Information, submittals, O&M manuals, vendor training manuals, shop drawings) which use nomenclature other than as indicated or specified will be rejected by the CM, and corrected and resubmitted by the Contractor at no additional cost to the City.

C. Technical Data Forms not completed in accordance with the specification will be rejected by the CM and corrected and resubmitted by the Contractor at no additional cost to the City.

1.06 NOMENCLATURE

A. All process equipment, pumps, gates, valves and access hatches shall be identified and numbered in accordance with any Surface Water Plant's numbering system as established by the City.

B. Process equipment, pumps, gates, valves and access hatches shall be identified as shown on the Drawings and as indicated in individual specification sections.

PART 2 PRODUCTS

2.01 TAGS

A. For each item assigned a nomenclature label as specified or indicated, provide a tag with the corresponding nomenclature label.

B. For equipment, provide corrosion resistant, 0.125-in thick plastic tags with equipment nomenclature, in white 1/2-in lettering, engraved in black enamel background, with a minimum of 1/8-in border around the engraved print, and with extra length to provide for fastening device.

C. Provide materials specified below for attaching tags to equipment:
   1. Provide 1/8-in by 3/8-in, Type 316 stainless steel machine screws.
   2. Provide one-piece self-locking nylon tag fasteners for tags that cannot be attached with screws.
      a. Provide nylon fasteners to attach tags only on non-moving parts of stationary equipment.
      b. Fasteners longer than 8-in are not acceptable.
      c. Provide no more than one fastener per tag.
   3. Provide 5-mil solvent-activated permanent adhesive.

PART 3 EXECUTION

3.01 GENERAL

A. It is essential to the construction, operation, and maintenance of the Project that the nomenclature and tagging system is correctly implemented. Therefore, all correspondence, requests for information, submittals, operations and maintenance data, tags, spare parts and all other items shall incorporate the correct nomenclature label. Replace or repair items not using the correct nomenclature label, at no additional cost to the City.

3.02 INSTALLATION OF TAGGING

A. Provide all material, equipment, and labor to install identification systems as specified and indicated.

B. Prepare and clean surfaces on which signs and tags will be mounted prior to installation.

C. Tags
   1. Attach tags to be accessible and readable without disassembly, removal, or disruption *of* operation of any equipment.
   2. Do not install tags in path of operation of moving or moveable equipment.
   3. Tighten nylon tag fasteners such that tags do not hang more than 1-in from equipment in accordance with manufacturer's printed instructions.
   4. Drilling for Machine Screws
      a. For fluid handling equipment including pipes, valves and pumps, and electric motors do not drill directly into wall containing the fluid or machinery; drill into flanges or support elements for attaching tags.

D. Install tags as specified with the specified or indicated nomenclature label incorporated as the text for these tags.

3.03 ASSET IDENTIFICATION SYSTEM

A. The Contractor shall use the Asset Identification System to fill out the Technical Data Forms. This nomenclature is ONLY to be used on the Technical Data Forms.

B. The Contractor shall obtain the most recent version of the Technical Data Form from the Construction Manager. An example Technical Data Form is included in Attachment A. The nomenclature shall be designated as follows:

1. The Contractor shall assign each piece *of* equipment, as specified in this Section, a unique number in accordance with the Asset Identification and Tagging Numbering System. The nomenclature is an alpha-numeric code required for each asset, according to the following structure.

XXXX	XX	XXXX	XXXX
Location	System	Position	Asset

2. Code values must be designated on the Technical Data Form for each new mechanical or electrical piece of equipment. The Technical Data Form is to be submitted for all new mechanical and electrical equipment (including instrumentation) added under this Contract.
3. The first code is the "Location" code. The "Location" Code for this project will be provided by the City.
4. The second code value is the "System" code. The two digit numeric "System" code identifies assets by its functional position. The currently established system codes are shown as follows:

System Code	System Description
01	Raw Water (RWl
02	Bulk Storage and Chemical Feed (CHEMl
03	Flocculation (FLOC)
04	Sedimentation (SEDIM)
05	Filtration (FLT)
06	Distribution (DIST)
07	Process Waste Treatment (PWT)
08	Facilities (FAG)
09	Grounds (GRNDS)

5. The third code value is the "Position" code. The "Position" code is an alpha-numeric code which combines processes and functions. The currently established position codes are shown in Attachment B.
6. The fourth code value is "Asset" code. The four digit "Asset" code is a numeric code that describes the asset position or station number. The plant asset identification numbers will be assigned by the City of Houston.

3.04 TECHNICAL DATA FORMS

A. Obtain most recent Technical Data Form from CM.

B. Completely fill out Technical Data Form using the nomenclature specified in Paragraph 3.03.

C. General Form Requirements
   1. Provide completed forms electronically using template provided by CM. Template will be a Windows-based program.
   2. Submit hard copy of all electronic files.
   3. Completely check all forms so that the information provided exactly matches the data for the equipment supplied.

D. Use electronic file for the Technical Data Form provided by CM. Form shall be submitted electronically in Microsoft Excel format and hardcopy.

E. Complete the Technical Data Form as specified.

3.05 CLOSEOUT PROCEDURES

A. Provide in accordance with Section 01770.

B. Compare tags and signs with equipment and areas referenced. Replace tags and signs that do not reference equipment or area to which attached, located, or giving direction to, at no additional cost to the City.

C. Attachment A – Sample Technical Data Forms.

D. Attachment B – Position Code to be used on Technical Data Forms.

ATTACHMENT A

GENERAL INFORMATION			
FACILITY NAME			
FACILITY NUMBER			
EQUIPMENT ID NUMBER			
EQUIPMENT DESIGNATION			
LOCATION			
PART #			
EQUIPMENT MANUFACTURER			
REMARKS:	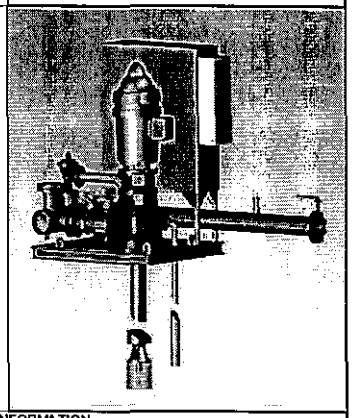		
DRIVE INFORMATION			
EQUIPMENT MANUFACTURER			
MODEL #			
SERIAL #			
MAX FLOW		OUTPUT RPM:	
DRIVER		MAX PRESS:	
INPUT HP:		COUPLING SIZE:	
GEAR RATIO:		SERVICE FACTOR	
MOTOR INFORMATION			
MANAFACTURED BY			
MODEL #			
SERIAL #			
NEMA FRAME		NEMA DESIGN	
VOLTS:		RPM:	
AMPS:		PHASES:	
HP:		SF:	
HZ:		AMB:	
ADDITIONAL INFORMATION			
WEIGHT		POLES	
GPM		LRA (Load-Rated Amps)	
MANU. WARR. START		MANU. WARR. END	
LUBE SYSTEM TYPE (Seal Water, Grease, Oil)			
GEAR-PINION			
MOUNTING POSITION (H-Horz, V-Ver, O-Other)			
TAG #		CAPACITY	
YEAR BUILT		DESIGN PRESS.	
SHAFT RIGID COUPLING		SHAFT SEAL	
IMPELLER TYPE		IMPELLER DIAMETER	
PISTON DIAMETER		SHAFT SIZE	
MAX SPEC GRAVITY		DESIGN TEMP	
KW		KVA	
FREQUENCY		PF	
FULL LOAD		INSULATION CLASS	
WIRE		PHASES:	
TEMP RISE		TEMP AMB	
MATERIAL OF CONSTRUCTION			
STRUCTURE			
LINER			
O/M REFERENCE MANUAL			
MAINTENANCE			
PUMP CURVES			

ATTACHMENT B
ESTABLISHED CITY OF HOUSTON POSITION CODES

Position Code	Position Description
ACB	Activated Carbon Transfer Blower
ACC	Hydraulic Accumulator
ACD	Activated Carbon Rotodip
ACP	Activated Carbon Feed Pump
ACT	Activated Carbon Feed Tank
AFP	Alum Feed Pump
AFT	Alum Feed Tank
AMFP	Ammonia Feed Pump
AMFT	Ammonia Feed Tank
AMST	Ammonia Storage Tank
AMTP	Ammonia Transfer Pump
ANLZ	Analyzer
AST	Alum Storage Tank
ATP	Alum Transfer Pump
BLDG	Building
BLWR	Blower
BP	Belt Press
BSN	Basin
BWC	Backwash Clarifier
BWP	Backwash Pump
BWT	Backwash Tank
BWW	Backwash Waste Pump
BWWPS	Backwash Waste Pump Station
CAS	Chemical Application Station
CBT	Carbon Slurry Batching Tank
CENT	Centrifuge
CFP	Caustic Feed Pump
CFT	Caustic Feed Tank
CHL	Chlorinator
CLE	Cl2 Evaporator

Position Code	Position Description
CLF	Clarifier
CLM	Collector Mechanism
CLS	Classifier
CLW	Clearwell
CMPR	Compressor
CNL	Canal
CONV	Conveyor
CPEQ	Computer Equipment
CRN	Crane
CSS	Carbon Storage Silo
CST	Caustic Storage Tank
CTP	Caustic Transfer Pump
CYC	Cyclone
ELEV	Elevators
FBAY	Forebay
FBM	Flocculator Basin Motor
FBN	Flocculator Basin
FBNA	Flocculator Basin Area
FEN	Fence
FFP	Flouride Feed Pump
FFT	Flouride Feed Tank
FLT	Filter
FLTA	Filter Area
FST	Flouride Acid Tank
FTP	Fluoride Transfer Pump
GRNDS	Grounds
GST	Ground Storage Tank
HSP	High Service Pump
HSPS	High Service Pump Station
HST	Hoist
HVAC	HVAC Equipment
LCP	Local Control Panel
LFST	Lift Station
LSB	Lime Storage Bin
LSFP	Lime Slurry Feed Pump

Position Code	Position Description
LSP	Low Service Pump
LSPA	Low Service Pump Area
LST	Lime Slurry Tank
LVLSYS	Level System
MBP	Manual Backup Panel
MCC	MCC/Switchgear
MCC	Motor Control Center
MR	Meter
MTR	Motor
MXR	Mixer
PBP	Polymer Batching Pump
PFP	Polymer Feed Pump
PIP	Piping
PMP	Pump
PMT	Polymer Mixing Tank
POB	Process Overflow Basin
PST	Polymer Storage Tank
PTP	Polymer Transfer Pump
RFP	Return Flow Pump
RM	Room
RSP	Raw Sludge Pump
RSPF	Return Flow Pump Station
RST	Raw Sludge Thickener
SBN	Settling Basin
SBNA	Settling Basin Area
SCADA	SCADA & Instrumentation
SCL	Scales
SCR	Screen
SLDGGR	Sludge Grinder
SLS	Sewer Lift Station
SPMPSYS	Sump Pump System
SUBSTN	Electrical Substation
SWPS	Surface Wash Pump Station
SYSAA	Systems Area
TFP	Transfer Pump
TK	Tanks
TPS	Transfer Pump Station

Position Code	Position Description
TRF	Transformer
TSP	Thickened Sludge Pump
TWS	Traveling Water Screen
VLV	Valve
WW	Wet Well

END OF SECTION

Section 01725

FIELD SURVEYING

PART 1 GENERAL

1.01 QUALITY CONTROL

A. Conform to State of Texas laws for surveys requiring licensed surveyors. Employ a surveyor acceptable to Project Manager if required by the Contract.

1.02 MEASUREMENT AND PAYMENT

A. UNIT PRICES

1. No separate payment will be made for field surveying. Include cost in unit price for related items.

1.03 SUBMITTALS

A. Conform to requirements of Section 01330 - Submittal Procedures.

B. Submit name, address, and telephone number of Surveyor to Project Manager before starting survey work.

C. Submit documentation verifying accuracy of survey work on request.

D. Submit certificate signed by Surveyor, that elevations and locations of the Work are in conformance with the Contract.

1.04 PROJECT RECORD DOCUMENTS

A. Maintain a complete and accurate log of control and survey work as it progresses.

B. Prepare a certified survey setting forth dimensions, locations, angles, and elevations of construction and site work upon completion of foundation walls and major site improvements.

C. Submit record documents under provisions of Section 01785 - Project Record Documents.

1.05 EXAMINATION

A. Verify locations of survey control points prior to starting the Work.

B. Notify Project Manager immediately if any discrepancies are discovered.

1.06 SURVEY REFERENCE POINTS

A. The City will establish survey control datum as provided in Document 00700 - General Conditions and as indicated on Drawings. Inform Project Manager in Advance of time horizontal and vertical control points will be established so

verification deemed necessary by Project Manager may be done with minimum inconvenience to the City or Contractor.

B. Locate and protect survey control points prior to starting site work; preserve permanent reference points during construction.

C. Notify Project Manager a minimum of 48 hours before relocation of reference points is needed due to changes in grades or other reasons.

D. Promptly report loss or destruction of reference points to Project Manager.

E. Reimburse the City for cost of reestablishment of permanent reference points disturbed by construction operations.

1.07 SURVEY REQUIREMENTS

A. Utilize recognized engineering survey practices.

B. Establish a minimum of two permanent benchmarks on site, referenced to established control points. Record horizontal and vertical location data on Project record documents.

C. Establish elevations, lines and levels to provide quantities required for measurement and payment and for appropriate controls for the Work. Locate and lay out the following with appropriate instruments:

1. Site improvements including grading, fill and topsoil placement, utilities, and footings and slabs

2. Grid or axis for structures

3. Building foundation, column locations, and ground floor elevations

D. Periodically verify layouts.

PART 2 P R O D U C T S - Not Used

PART 3 E X E C U T I O N - Not Used

END OF SECTION

Section 01731

CUTTING AND PATCHING

PART 1 G E N E R A L

1.01 SECTION INCLUDES

A. Cutting, patching and fitting of the Work or work under construction. Coordinating Installation or connection of the Work to existing facilities, or uncovering work for access, inspection or testing and related submittals.

1.02 MEASUREMENT AND PAYMENT

A. UNIT PRICES

1. No separate payment will be made for cutting and patching. Include cost in unit price for related items.

1.03 CUTTING AND PATCHING

A. Perform activities to avoid interference with facility operations and work of others in accordance with Document 00700 - General Conditions of Contract.

B. Execute cutting and patching, including excavation, backfill and fitting to:

1. Remove and replace defective work or work not conforming to Drawings and Specifications;

2. Take samples of installed work as required for testing;

3. Remove construction required to provide for specified alterations or additions to existing work;

4. Uncover work to allow inspection or reinspection by Project Manager or regulatory agencies having jurisdiction;

5. Connect uninstalled work to completed work in proper sequence;

6. Remove or relocate existing utilities and pipes that obstruct work;

7. Make connections or alterations to existing or new facilities;

8. Provide openings, channels, chases and flues and cut, patch, and finish; if required; or

9. Provide protection for other portions of the Work.

C. Restore existing work to a condition equal to or better than that which existed Prior to cutting and patching, and to standards required by Specifications.

D. Support, anchor, attach, match, trim and seal materials to work of others. Unless otherwise specified, Furnish and Install sleeves, inserts, and hangers required for execution of the Work.

E. Provide shoring, bracing and support necessary to maintain structural integrity and to protect adjacent work from damage during cutting and patching. Request written approval from Project Manager, before cutting structural members such as beams, anchors, lintels, or other supports. Follow approved submittals, as applicable.

F. Match new materials to existing materials by bonding, lapping, mechanically tying, anchoring or other effective means in order to prevent cracks and to minimize evidence of patching. Conceal effects of demolition and patching by blending new construction to existing surfaces. Avoid obvious breaks, joints or changes of surface appearance unless shown on Drawings or authorized by Project Manager.

1.04 SUBMITTALS

A. Conform to requirements of Section 01330 - Submittal Procedures.

B. Submit a written request to Project Manager for consent to proceed, before conducting cutting operations that might affect structural integrity, design function, City operations, or work of another contractor.

C. Include the following in submittal:

1. Identification of Project

2. Description of affected work

3. Necessity for cutting

4. Effect on other work and on structural integrity

5. Describe the proposed work including:
   a. Scope of cutting and patching
   b. Contractor, Subcontractor or Supplier who will execute the work
   c. Proposed Products
   d. Extent of refinishing
   e. Schedule of operations

6. Alternatives to cutting and patching

D. When work conditions or schedules dictate the need for change of materials or methods, submit a written recommendation to Project Manager that includes:

1. conditions necessitating the change;

2. recommendations for alternative materials or methods; and

3. submittals required for proposed substitutions

E. Notify Project Manager in writing when work will be uncovered for observation. Do not begin cutting or patching operations until authorized by Project Manager.

1.05 CONNECTIONS TO EXISTING FACILITIES

A. Perform construction operations necessary to complete connections and tie-ins to existing facilities. Keep existing facilities in continuous operation unless otherwise permitted in the Specifications or approved in writing by Project Manager.

B. Coordinate interruption of service requiring connection to existing facilities with Project Manager. Do not bypass wastewater or sludge to waterways. Provide temporary pumping facilities to handle wastewater if necessary. Use temporary bulkheads to minimize disruption. Provide temporary power and piping to facilitate construction where necessary.

C. Submit a detailed schedule of proposed connections, including shut-downs and tie-ins. Include proposed time and date as well as anticipated duration of work. Coordinate the connection schedule with the construction schedule.

1. Submit specific times and dates to Project Manager at least 48 hours in advance of proposed work.

D. Procedures and Operations:

1. Operate existing pumps, valves and gates in required sequence under supervision of Project Manager. Do not operate valves, gates or other items of equipment without Project Manager's knowledge.

2. If possible, test equipment under operating conditions before making final tie-ins to connect equipment to existing facility.

3. Coordinate work and schedules. Notify Project Manger at least 48 Hours before shutdowns or bypasses are required.

PART 2 P R O D U C T S Not Used

PART 3 E X E C U T I O N Not Used

END OF SECTION

Section 01740

SITE RESTORATION

PART 1 G E N E R A L

1.01 SECTION INCLUDES

A. Restoration of site affected by the Work in public or private property, including pavement, esplanades, sidewalks, driveways, fences, lawns and landscaping.

1.02 MEASUREMENT AND PAYMENT

A. Unit Prices.

1. Payment for restoration of Project site disturbed by utility construction operations is on a linear foot basis. Measurement will be as provided for corresponding utility in each Specification section. No separate payment made for branch pipe, valves and, other associated work for utilities. Measurement for restoration with multiple utilities within the same right-of-way will be on a linear foot basis for only one utility.

2. No separate payment made for facility or roadway projects. Include cost in the surface improvements associated with the facility or roadway construction.

3. Payment includes required site restoration within the right-of-way or easement regardless of size or type of pipe, method of construction, paved or unpaved areas or thickness and width of pavement.

4. No separate payment made for site restoration for service connections under this Section. Include cost in appropriate utility section.

5. Refer to Section 01270 – Measurement and Payment for Unit Price procedures.

B. Stipulated Price (Lump Sum) Contracts. If Contract is Stipulated Price Contract, include payment for work under this section in total Stipulated Price.

1.03 DEFINITIONS

A. Phase: Locations identified on the plans and listed in Section 1110 – Summary of Work under Work Sequence.

B. Site Restoration: Replacement or reconstruction of Site Improvements located in rights-of-way, easements, public property, and private property affected or altered by the Work.

C. Site Improvement: Includes pavement, curbs and gutters, esplanades, sidewalks, driveways, fences, lawns, irrigation systems, landscaping, and other improvements in existence at the Project site before commencement of construction operations.

1.04 SUBMITTALS

A. Conform to requirements of Section 01330 - Submittal Procedures.

B. Schedule of testing, service connections, abandonment, backfill, and site restoration.

C. Sample of notices to residents outlining their responsibility for maintenance of site improvements adjacent to the Project that are not disturbed by construction operations

1.05 SCHEDULING

A. Schedule testing, service connections, abandonment, backfill and site restoration immediately following completion of pipe laying work or paving within each block or line segment.

B. Phased Construction:

1. Commencement of subsequent Phase will follow scheduling of site restoration of prior Phase. Limit work to a maximum of two Phases of the project.

C. Construction of Projects with no Phases listed in Section 01110- Summary of Work:

1. Complete site restoration prior to disturbing over 50% of total project linear feet or 2,000 linear feet, whichever is greater, of right-of-way or easement.

2. Limit work to a maximum of 50% of total project linear feet or 2,000 linear feet, whichever is greater, of right-of-way and easement. Commence work in additional right-of-way or easement after completion of site restoration.

PART 2 PRODUCTS

2.01 MATERIALS

A. Pavement, Sidewalks and Driveways: Materials specified in Section 02951 - Pavement Repair and Resurfacing.

B. Seeding and Sodding: Sod specified in Section 02922 - Sodding and Seed specified in Section 02921 - Hydromulch Seeding.

C. Trees, Shrubs and Plantings: Conform to requirements of Section 01562 – Tree and Plant Protection.

PART 3 EXECUTION

3.01 Preparatory Work

A. Provide cleanup and restoration crews to work closely behind pipe laying and roadway construction crews, and where necessary, during testing, service restoration, abandonment, backfill and surface restoration.

B. Water Lines: Unless otherwise approved by Project Manager, comply with the following:

1. Once Project Manager approves work within a Phase, immediately begin preparatory work for disinfection effort.

2. No later than three days after completing disinfection preparatory work, submit to City appropriate request for disinfection.

3. If City fails to perform initial disinfection of lines in accordance with Section 2514 - Disinfection of Water Lines, within seven days from submission of appropriate request, and if approved by Project Manager, pipe laying operations may continue beyond approved limits until the City responds.

4. Immediately after transfer of services, begin abandonment of old water lines and site restoration.

C. Wastewater Lines:

1. Once Project Manager approves work within a Line Segment, immediately begin preparatory work for testing effort.

2. No later than three days after completing preparatory work for testing, initiate testing work.

3. Immediately after transfer of service connections, begin abandonment of old wastewater lines, and site restoration.

D. Street Construction and Paving Projects

1. Once Project Manager approves work within a Line Segment or block, immediately begin preparatory work for testing effort.

2. No later than three days after completing preparatory work for testing, initiate testing work.

3. Immediately after testing begin site restoration.

E. Street Construction and Paving Projects

1. Once Project Manager approves work within a block, immediately begin preparatory work for sidewalk construction, sodding and hydromulching and tree planting.

2. No later than seven days after completing preparatory work, initiate construction.

3.02 CLEANING

A. Remove debris and trash to maintain a clean and orderly site in accordance with requirements of General Conditions and Section 01576 - Waste Material Disposal.

3.03 LANDSCAPING AND FENCES

A. Seeding and Sodding.

1. Remove construction debris and level area with bank sand so that new grass surface matches level of existing grass and maintains pre-construction drainage patterns. Level and fill minor ruts or depressions caused by construction operations with bank sand, where grass is still viable.

2. Restore previously existing turfed areas with sod and fertilize in accordance with Section 02922 - Sodding. Sod to match existing turf.

3. Restore unpaved areas not requiring sodding with hydromulch seeding conforming to Section 02921 - Hydromulch Seeding.

B. Trees, Shrubbery and Plants.

1. Remove and replant trees, shrubs, and plants in accordance with requirements of Section 01562 – Tree and Plant Protection.

C. Fence Replacement.

1. Replace removed or damaged fencing to equal or better condition than existed prior to construction, including concrete footings and mow strips. Provide new wood posts, top and bottom railing and panels. Metal fencing material, not damaged by the Work, may be reused.

2. Remove and dispose of damaged or substandard material.

3.04 MAINTENANCE

A. Maintain shrubs, plantings, sodded areas and seeded areas.

B. Replace shrubs, plantings and seeded or sodded areas that fail to become established.

C. Refer to Section 01562 - Tree and Plant Protection, Section 02921 - Hydromulch Seeding and Section 02922 - Sodding for maintenance requirements.

END OF SECTION

Section 01755

STARTING SYSTEMS

PART 1 G E N E R A L

1.01 SECTION INCLUDES

A. Starting systems.

B. Demonstration and instructions.

C. Testing, adjusting and balancing.

PART 2 P R O D U C T S - Not Used

PART 3 E X E C U T I O N

3.01 PREPARATION

A. Coordinate schedule for start-up of various equipment and systems.

B. Notify Project Manager seven days prior to startup of each item.

C. Verify each piece of equipment or system has been checked for proper lubrication, drive rotation, belt tension, control sequence, or other damage-causing conditions.

D. Verify tests, meter readings, and specified electrical characteristics agree with those required by equipment or system manufacturer.

E. Verify wiring and support components for equipment are complete and tested.

F. Execute start-up under supervision in accordance with manufacturer's instructions.

G. When specified in individual Specification sections, require manufacturer to provide an authorized representative to be present at the site to inspect, check and approve equipment or system installation prior to start-up, and to supervise placing equipment or system in operation.

H. Submit written report indicating that equipment or system has been properly installed and is functioning correctly.

3.02 DEMONSTRATION AND INSTRUCTIONS

A. Demonstrate operation and maintenance of Products to Project Manager two weeks prior to Date of Substantial Completion.

B. Utilize O&M Manuals as the basis for instruction. Review contents of manual with Project Manager in detail to explain aspects of operation and maintenance.

C. Demonstrate start-up, operation, control, adjustment, trouble-shooting, servicing, maintenance, and shutdown of each item of equipment at agreed-upon times, at the equipment location.

D. Prepare and insert additional data in O&M Manuals when the need for additional data becomes apparent during instruction.

E. At a minimum, Contractor will demonstrate the following:

1. Products and procedures to be used in maintaining various surfaces, e.g., counter tops, toilet partitions, tile floors and carpeting;

2. procedures to set and maintain landscape irrigation system;

3. procedures to set and maintain security and fire alarm systems; and

4. procedures to set and maintain HVAC systems.

3.03 TESTING, ADJUSTING AND BALANCING

A. Contractor shall appoint, employ and pay for the services of an independent firm to perform testing, adjusting and balancing.

B. Submit reports by the independent firm to Project Manager describing observations and results of tests and signifying compliance or non-compliance with specified requirements and requirements of the Contract.

END OF SECTION

Section 01770

CLOSEOUT PROCEDURES

PART 1 G E N E R A L

1.01 SECTION INCLUDES

A. Procedures to establish Date of Substantial Completion.

B. Closeout procedures for final submittals, O&M data, warranties, spare parts and maintenance materials.

C. Texas Department of Licensing and Regulation (TDLR) inspection for Texas Accessibility Standards (TAS) compliance.

1.02 SUBSTANTIAL COMPLETION

A. Comply with Document 00700 - General Conditions regarding Date of Substantial Completion when Contractor considers the Work, or portion thereof designated by Project Manager, to be substantially complete.

B. Insure the following items have been completed when included in the Work, prior to presenting a list of items to be inspected by Project Manager for issuance of a Certificate of Substantial Completion:

1. cutting, plugging, and abandoning of water, wastewater, and storm sewer lines, as required by Contract documents for each item;

2. construction of, and repairs to, pavement, driveways, sidewalks, and curbs and gutters;

3. sodding and hydromulch seeding, unless waived by Project Manager in writing;

4. general clean up including pavement markings, transfer of services, successful testing and landscape;

5. additional requirements contained in Section 01110 - Summary of Work.

C. Assist Project Manager with inspection of Contractor's list of items and complete or correct the items, including items added by Project Manager, within specified time period.

D. Should Project Manager's inspection show failure of Contractor to comply with requirements to obtain Date of Substantial Completion, including those items in Paragraph 1.02 B. of this section, Contractor shall complete or correct the items, before requesting another inspection by Project Manager.

1.03 CLOSEOUT PROCEDURES

A. Comply with Document 00700 - General Conditions regarding final completion and final payment when the Work is complete and ready for Project Manager's final inspection.

B. Provide Project Record Documents in accordance with Section 01785 - Project Record Documents.

C. Complete or correct items on punch list, with no new items added. Address new items during warranty period.

D. The City will occupy portions of the Work as specified in other sections.

1.04 FINAL CLEANING

A. Execute final cleaning prior to final inspection.

B. For facilities, clean interior and exterior glass and surfaces exposed to view; remove temporary labels, stains and foreign substances, polish transparent and glossy surfaces, vacuum carpeted and soft surfaces.

C. Clean equipment and fixtures to sanitary condition.

D. Clean or replace filters of operating equipment.

E. Clean debris from roofs, gutters, down spouts, and drainage systems.

F. Clean site; sweep paved areas, and rake clean landscaped surfaces.

G. Remove waste and surplus materials, rubbish, and temporary construction facilities from site following final test of utilities and completion of the Work.

1.05 ADJUSTING

A. Adjust operating equipment to ensure smooth and unhindered operation. Value of this testing and adjusting is five percent of Lump Sum Price in the Schedule of Values for item being tested.

1.06 OPERATION AND MAINTENANCE DATA

A. Submit O&M data as noted in Section 01330 - Submittal Procedures.

B. Five percent of lump sum amount of each piece of equipment as indicated in Schedule of Unit Price Work or Schedule of Values will be paid after the required O&M data submittals are received and approved by Project Manager.

1.07 WARRANTIES

A. Provide one original of each warranty from Subcontractors, Suppliers, and manufacturers.

B. Provide Table of Contents and assemble warranties in a 3-ring/D binder with durable plastic cover.

C. Submit warranties prior to final progress payment.

D. Warranties shall commence in accordance with the requirements in Document 00700 - General Conditions.

1.08 SPARE PARTS AND MAINTENANCE MATERIALS

A. Provide Products, spare parts, maintenance and extra materials in quantities specified in individual Specification sections.

B. Deliver to a location within the City limits as directed by Project Manager. Applicable items must be delivered prior to issuance of a final Certificate for Payment.

PART 2 P R O D U C T S - Not Used

PART 3 E X E C U T I O N - Not Used

END OF SECTION

Section 01782

OPERATIONS AND MAINTENANCE DATA

PART 1 G E N E R A L

1.01 SECTION INCLUDES

A. Submittal requirements for equipment and facility Operations and Maintenance (O&M) Manuals

1.02 MEASUREMENT AND PAYMENT

A. Measurement for equipment O&M Manuals is on a lump sum basis equal to five percent of the individual equipment value contained in Schedule of Unit Prices or Schedule of Values. The lump sum amount may be included in the first Progress Payment following approval of the O&M Manuals by Project Manager.

1.03 SUBMITTALS

A. Conform to requirements of Section 01330 - Submittal Procedures. Submit a list of O&M Manuals and parts manuals for equipment to be incorporated into the Work.

B. Submit documents with 8-1/2 x 11-inch text pages, bound in 3-ring/D binders with durable plastic covers.

C. Print "OPERATION AND MAINTENANCE INSTRUCTIONS", Project name, and subject matter of binder on covers when multiple binders are required.

D. Subdivide contents with permanent page dividers, logically organized according to the Table of Contents, with tab titling clearly printed under reinforced laminated plastic tabs.

E. O&M Manual contents: Prepare a Table of Contents for each volume, with each Product or system description identified.

1. Part 1 - Directory: Listing of names, addresses, and telephone numbers of Design Consultant, Contractor, Subcontractors, and major equipment Suppliers.

2. Part 2 - O&M instructions arranged by system. For each category, identify names, addresses, and telephone numbers of Subcontractors and Suppliers and include the following:
   a. Significant design criteria.
   b. List of equipment.
   c. Parts list for each component.
   d. Operating instructions.
   e. Maintenance instructions for equipment and systems.
   f. Maintenance instructions for special finishes, including recommended cleaning methods and materials and special precautions identifying detrimental agents.

3. Part 3 - Project documents and certificates including:
   a. Shop Drawings and relevant data.
   b. Air and water balance reports.
   c. Certificates.
   d. Photocopies of warranties.

F. Submit two copies of O&M Manuals and parts manuals, for review, within one month prior to placing the equipment or facility in service.

G. Submit one copy of completed volumes in final form 10 days prior to final inspection. One copy with Project Manager comments will be returned after final inspection. Revise content of documents based on Project Manager's comments prior to final submittal.

H. Revise and resubmit three final volumes within 10 days after final inspection.

1.04 EQUIPMENT O&M DATA

A. Furnish O&M Manuals, prepared by manufacturers for all equipment. Manuals must contain, as a minimum, the following:

1. Equipment functions, normal operating characteristics, and limiting conditions.

2. Assembly, Installation, alignment, adjustment, and checking instructions.

3. Operating instructions for start-up, normal operation, regulation and control, normal shutdown, and emergency shutdown.

4. Detailed drawings showing the location of each maintainable part and lubrication point with detailed instructions on disassembly and reassembly of the equipment.

5. Troubleshooting guide.

6. Spare parts list, predicted life of parts subject to wear, lists of spare parts recommended to be on hand for both initial start-up and for normal operating inventory, and local or nearest source of spare parts availability.

7. Outline, cross-section, and assembly drawings with engineering data and wiring diagrams.

8. Test data and performance curves.

B. Furnish parts manuals for all equipment, prepared by the equipment manufacturer, which contain, as a minimum, the following:

1. Detailed drawings giving the location of each maintainable part.

2. Spare parts list with predicted life of parts subject to wear, lists of spare parts recommended on hand for both initial start-up and for normal operating inventory, and local or nearest source of spare parts availability.

PART 2 P R O D U C T S - Not Used

PART 3 E X E C U T I O N - Not Used

END OF SECTION

Section 01785

PROJECT RECORD DOCUMENTS

PART 1 G E N E R A L

1.01 SECTION INCLUDES

A. Maintenance and submittal of record documents and Samples.

1.02 MAINTENANCE OF DOCUMENTS AND SAMPLES

A. Maintain one record copy of documents at the site in accordance with Document 00700 - General Conditions.

B. Store record documents and Samples in field office, if a field office is required by the Contract, or in a secure location. Provide files, racks, and secure storage for record documents and Samples.

C. Label each document "PROJECT RECORD" in neat, large, printed letters.

D. Maintain record documents in a clean, dry, and legible condition. Do not use record documents for construction purposes. Do not use permit drawings to record Modifications to the Work.

E. Keep record documents and Samples available for inspection by Project Manager.

F. Bring record documents to progress review meetings for viewing by Project Manager and, if applicable, Design Consultant.

1.03 RECORDING

A. Record information legibly with red ink pen on a set of blueline opaque drawings, concurrently with construction progress. Maintain an instrument on site at all times for measuring elevations accurately. Do not conceal work until required information is recorded

B. Contract Drawings and Shop Drawings: Mark each item to record completed Modifications, or when minor deviations exist, the actual construction including:

1. Measured depths of elements of foundation in relation to finish first floor datum.
2. Measured horizontal locations and elevations of Underground Facilities and appurtenances, referenced to permanent surface improvements.

3. Elevations of Underground Facilities referenced to City of Houston benchmark utilized for the Work.

4. Measured locations of internal utilities and appurtenances concealed in construction, referenced to visible and accessible features of the Work.

5. Dimensions and details of field changes

6. Changes made by Modifications.

7. Details not on original Drawings.

8. References to related Shop Drawings and Modifications.

C. Survey all joints of water mains at the time of construction. Record on Drawings, water main invert elevation, elevation top of manway, and centerline horizontal location relative to baseline.

D. For large diameter water mains, mark specifications and addenda to record:

1. Manufacturer, trade name, catalog number and Supplier of each Product actually Installed.

2. Changes made by Modification or field order.

3. Other matters not originally specified.

E. Annotate Shop Drawings to record changes made after review.

1.04 SUBMITTALS

A. At closeout of the Contract, deliver Project record documents to Project Manager.

PART 2 P R O D U C T S - Not Used

PART 3 E X E C U T I O N - Not Used

END OF SECTION

SECTION 02101

SOLIDS REMOVAL, LOADING, TRANSPORTATION, AND DISPOSAL

PART 1 GENERAL

1.01 SUMMARY

A. This section includes requirements for the removal, loading, transportation, and disposal of solids contained in the following City-owned water purification facilities by the Contractor.
   1. Plant 2 Clearwell
   2. Plant 2 Filter Effluent Flume
   3. Other Structures

B. Solids removal will allow the work to be completed in a safe manner and environment. Solids removal shall consist of removing the solids from the structures, prevent solids migration and transport from one structure to another during the removal process.

C. Related sections.
   1. The Contract Documents are complementary; what is called for by one is as binding as if called for by all.
   2. It is the Contractor's responsibility for scheduling and coordinating the Work of subcontractors, suppliers, and other individuals or entities performing or furnishing any of Contractor's Work.

1.02 MEASUREMENT & PAYMENT

A. Quantities & Base Unit Prices
   1. The quantities and base unit prices are listed in Document No. 00410B (Bid Form Part B)
   2. The final quantities for Major Unit Price Work items may vary up to 40% (plus or minus) from the quantities in Document No. 04100B. The final quantities for other Unit Price Work items may vary more.

B. Unit Prices
   1. Solid removal and loading – payment shall be made on the basis of per net wet ton (2,000 lbs. per ton) as documented on weight tickets from certified scales (Reference Paragraph 3.07) for the following facility types:
      a. Plant 2 Clearwell
      b. Plant 2 Filter Effluent Flume
   2. The Plant 2 Clearwell contains the vertical turbine pumps and associated instrumentation common to wet wells. The existing interior walls, ceiling, and equipment inside the clearwell shall be power washed and scraped without damaging concrete surfaces, equipment, or instrumentation.

3. The Plant 2 Filter Effluent Flume contains the Plant 2 Filter discharge piping. The existing interior walls, ceiling, and equipment inside the clearwell shall be power washed and scraped without damaging concrete surfaces, equipment, or instrumentation.
4. Solids transportation and disposal – payment shall be made on the basis of per net wet ton (2,000 lbs. per ton) as documented on weight tickets from certified scales (Reference Paragraph 3.07.J) for characteristically non-hazardous/special waste (as defined by applicable regulations. This pay item applies to loads that pass project site paint filter testing.
5. Include in unit costs all costs, including but not limited to labor, materials, equipment, mobilization/demobilization, testing, and disposal costs.
6. The City will not pay additional costs associated with material failing the paint filler test upon arrival at the landfill or costs associated with overweight loads.

C. The Contractor shall submit the following information with each invoice:
1. Original top copy of the manifest used to document each load transported and disposed.
2. Legible copy of each load weight ticket(s).
3. Pre-construction and finished photographs (Reference Section 01321).
4. Summary table containing the date each container loaded; load manifest no.; weight ticket no.(s); gross, tare, and net weights; landfill name and permit no.; haul tractor number; haul trailer no., and paint filter test results.
5. Contractor daily log sheet.
6. Summary of equipment found in cleaned process unites and observed equipment damage.
7. Photographs, video footage, and/or profiles to verify that the wet wells and other facilities have been cleaned as specified.

1.03 DEFINITIONS

A. Clearwell – transfer pump station wet well located at the end of the filter effluent flume.

B. Net Wet Ton – the difference between the gross weight (wet tonnage) and the tare weight (tonnage) of each load transported to the landfill. Net wet ton consists of removed material that passes the EPA's paint filter test (containing no free draining water) prior to transportation offsite (Reference SW-846 procedures)

C. Solids – includes both floating and settled material such as sand, grit, sludge, vegetation, plastics, rubble, broken concrete, rags, debris, equipment parts, soil, and other solid or semi-solid materials of all sizes contained within identified structures located at City water purification facilities.

1.04 PERFORMANCE REQUIREMENTS

A. Solids removal shall include the removal of all solids, as defined in this Section.

B. Solids removal shall include low pressure washing of all surfaces such that all caked-on solids are removed. Solids removal does not include the removal of grime or stains.

C. If on-site dewatering is utilized, the equipment used for such dewatering shall consistently achieve a solids capture rate of at least 95%.

D. While conducting solids removal, loading, transportation, and disposal activities, the Contractor shall always provide a supervisor who is responsible at the project site. This person shall have the authority to make management decisions pertaining to the project. This person shall be equipped with a cell phone and the phone number shall be provided to the City. The Contractor's supervisor shall be able to communicate in English, both verbally and in writing.

E. The Contractor shall also provide an off-site emergency telephone number so contact may be made easily at all times in case of emergencies.

F. The Contractor shall take all necessary precautions to prevent leakage or spills of any kind onto the plant property or into offsite pipeline or other conveyance systems.

G. Project activities shall be conducted in a manner that prevents nuisance conditions from developing.

H. The Contractor shall minimize the spread of dust and airborne particles associated with the work. Temporary enclosures and other suitable methods to prevent the spread of dust and airborne particles shall be utilized as directed by the City.

I. Appropriate controls shall be utilized to limit noise to levels designated by applicable City ordinances.

J. All project activities shall be conducted in a manner that minimizes the generation of odors and prevents odor complaints from City utility customers.

K. The Contractor shall exercise care to prevent contamination of the City's potable water system. Proper approval shall be obtained and applicable City guidelines shall be followed with drawing water from a hydrant.

L. The Contractor shall abide by all identified City security procedures.

M. The City's Department of Public Works and Engineering requires that any worker on the project site have an identification badge that is easily visible on his or her body. The badge shall include a photograph of the employee, name of the employee, name of the company, and company logo. This requirement applies to all employees of the prime Contractor, subcontractors, suppliers, and others working on the project site.

N. The Contractor shall make all reasonable efforts to cooperate with City construction, service, or supply Contractor's, as well as City customers.

O. The Contractor shall maintain overall responsibility for the project activities.

P. Solids removal, loading, and transportation tasks shall be coordinated with City plant operations and maintenance activities.

Q. Contractor personnel shall not live on the project site during the performance of contract work.

R. No open fires shall be permitted on City property.

S. The Contractor shall not disconnect any City -owned utilities or other process equipment.

T. The Contractor shall provide a minimum of 48 hours notice to the City and private utility companies (when applicable), excluding weekends and holidays, in advance of required utility shutdown. Coordinate all work as required.

1.05 SUBMITTALS

A. Contractor shall submit the following information to the City:
   1. Detailed description of the means and methods to be used for solids removal, loading, transportation, and disposal shall be submitted for City approval. Drawings, figures, and tables shall be provided in support of the submitted description. The location and design of temporary work platforms, scaffolds, temporary separation walls, temporary dams, and/or temporary diversion channels shall be provided.
   2. Waste profile(s) for signature by the City and landfill acceptance number(s) and documentation used for material disposal for City record.
   3. List of landfills to be used for characteristically non-hazardous material disposal (included name of landfill, owner/operator, location, etc.) for City record.
   4. List of all road tractors, trailers, trucks, and/or containers to be utilized for transporting the removed solids and the tare weight at full fluid levels for each piece of equipment for City record (Reference Paragraph 3.07).
   5. Copies of all required licenses and permits for each solids transportation rig for City record.
   6. Site Safety Plan for City record.
   7. Anticipated Progress Schedule (including preparation and closeout) for City approval (Reference Paragraph 1.08.F).
   8. Copies of OSHA confined space certificates, Category “C”, for all workers that will be entering the structure(s) for City record.
   9. Spill containment and response plans for all types of on or off-site spills involving materials utilized or produced under this project and under the direct control of the CONTRACTOR for City approval.

B. Written notification of plans to initiate Work Order activities at least 72 hours prior to initiating for City record.

C. Daily log of all project activities using a log form provided by the City for City record.

D. Invoices for City approval and payment (Reference Paragraph 1.02.C).

E. Draft five-part manifest for City approval (Department of Health)

F. Submittals shall be provided in accordance with the requirements of Section 01330 (Submittal Procedures).

1.06 QUALITY ASSURANCE

A. The Contractor shall monitor quality control over suppliers, manufacturers, products, services, site conditions, and workmanship, to produce work of specified quality at no additional cost to the City.

B. The Contractor shall comply with specified standards as minimum requirements for the Work except when more stringent tolerances, codes, or specified requirements indicate higher standards or more precise workmanship.

C. The Contractor shall have at least five years of previous experience cleaning facilities of the type described. The Contractor shall have completed a minimum of three projects of similar scope to the projects described in this contract in the five year time period. The Contractor shall have been the prime Contractor on at least one project in this time period.

D. The Contractor shall perform the Work using persons qualified to produce a specified level of workmanship.

E. The Contractor shall obtain copies of standards and maintain at job site (e.g., SW-846 test procedures).

F. The Contractor shall only utilize labor that is experienced in the removal, loading, transportation, and disposal of solids from municipal WPPs. The Contractor shall use experienced personnel to operate solids removal equipment and devices.

G. The selected means and methods shall be based on the conditions of the structure at the time work begins. More than one method or type of equipment may be required for a given structure or Work Order.

H. When the City requests, demonstrate the performance capabilities of the removal equipment and methods. If results of the demonstration are not satisfactory to the City, the Contractor shall provide other means and methods that will remove the solids.

I. Prior to transportation, material from each load shall be sampled and analyzed using SW-846 paint filter test procedures, in the presence of a City -designated representative. The results of each test shall be recorded on the manifest associated with each load.

J. The Contractor shall be completely familiar with, and conduct all contract activities in compliance with all applicable City, County, State of Texas and Federal regulations, ordinances, codes, standards, and other requirements.

K. Contractor and a City representative shall meet to discuss the details of each issued Work Order within five working days of the Contractor receiving a Work Order.

L. The City may select, employ, and pat for the services of an independent testing laboratory to perform testing identified in Part 3 of this section and any additional testing the City deems necessary. Employment of a testing laboratory by the City shall not relieve the Contractor of its obligation to perform work in accordance with the Contract requirements.

M. The Contractor shall notify the City during normal working hours on the day previous to expected time for operations requiring inspection and testing services. When the Contractor fails to make timely prior notification, the Contractor shall not proceed with the operations requiring inspection and testing services.

N. The City will deduct a minimum of two-hour charge from periodic progress payments when operations requiring testing or inspection are canceled without prior notification.

1.07 PROJECT SITE CONDITIONS

A. It has been many years since the contract process units have been cleaned. The Contractor shall expect heavy concentrations of difficult to remove solids.

B. With the exception of wet wells, the bottom surface of most process units is generally flat.

C. The tonnage of solids contained in each facility is a rough estimate. Detailed measurements of solids weight/volume have not been made.

D. The City reserves the right to work on and in each process unit prior to, during, and immediately following removal of solids removal activities to minimize disruption of solids removal activities.

1.08 SEQUENCING AND SCHEDULING

A. Solids removal from active operating process shall be coordinated with the sequencing described in Section 01110 Summary of Work.

B. Solids removal and loading activities shall be limited to normal work times (i.e., Monday thru Friday between 7:00 AM and 5:00 PM). The Contractor shall submit requests for extended work hours in writing to the City at least 48 hours in advance. Each request shall be approved in writing by the City.

C. Only one wet well, section, or process basin will be taken offline at a time. The Contractor shall complete solids removal from the offline section prior to initiating removal efforts in the next section.

D. Structures are to be taken offline by the Contractor in accordance with the Maintenance of Plant Operations included in Section 01110 Summary of Work. The Contractor shall complete solids removal from the offline section prior to initiating removal efforts in the next section.

E. The submitted schedule shall show sufficient details to illustrate sufficient planning of the work.

F. The Contractor shall develop a Schedule. The Contractor shall update and maintain Schedule throughout the course of the contract. The Schedule shall be in bar chart format. The bar chart shall show major activities as separate bars, list start and finish date for each activity at left side of diagram, identify first work day of each week, include legible notes, show original dates for each activity in the approved initial progress schedule by narrow bar next to a wider bar for the current schedule, show date each activity actually started or finished when an event has occurred, and indicate percentage progress. Organize work activities by process unit. Activities shall be in chronological order. The Schedule shall be updated when the schedule changes. The schedule shall be reviewed by the City biweekly.

G. The City shall be notified of schedule changes 72 hours prior to commencing work on the changes.

PART 2 PRODUCTS

2.01 CLEANING AGENTS

A. If required, the Contractor shall only use NSF 61 approved and certified cleaning materials and agents for the surface to be cleaned. Cleaning agents that are potentially hazardous to human health or the environment shall not be used. Cleaning agents and materials that might damage finished surfaces shall not be used.

PART 3 EXECUTION

3.01 GENERAL

A. The Contractor shall provide all labor, equipment, materials, and supplies required to perform the specified tasks. Only contract personnel shall operate the provided equipment.

B. The Contractor shall maintain safe access to all adjacent structures, property, and buildings. The Contractor shall not obstruct plant or offsite roadways, sidewalks, or passageways adjacent to the work site. All required road crossings for temporary piping shall be constructed to maintain plant traffic flow without damaging the pipe or vehicles.

C. The Contractor shall erect and maintain enclosures, barriers, warning lights, and other required protective devices.

3.02 EXAMINATION

A. City records are available for the Contractor to review upon request. Requests to review City records shall be submitted in writing 72 hours in advance.

B. Prior to initiating work, an initial estimate of the volume of solids in each process unit shall be made by the Contractor's Supervisor and a City representative. The estimate shall be calculated by measuring the interior surface dimensions of each process unit and dropping a measuring device into the unit at various locations in order to determine the average depth of solids in each unit.

3.03 PREPARATION

A. Not Used

B. The City will collect and analyze a representative sample(s) of solids to be removed. The following analyses will be performed on this sample(s) using EPA approved procedures.
   1. Toxicity Characteristic Leaching Procedure (TCLP)
   2. Ignitability
   3. Corrosivity
   4. Reactivity

   A copy of the analytical report will be provided to the Contractor for inclusion with the landfill waste profile documents. The provided data may be used to determine whether or not the solids are characteristically non-hazardous as define in applicable regulations.

C. Contractor shall isolate each process unit in accordance with the Maintenance of Plant Operations included on the drawings.

D. Diversion pumping is required to handle normal process flows and to dewater and manage leakage into a given process unit.

E. For many situations, confined space entry training, procedures, and equipment shall be required. Any additional costs for these services shall be included in the unit prices. A City representative and a Contractor representative shall lockout and tagout impacted equipment both locally and at the motor control center(s). Atmospheric dangers may be present in the work locations (e.g., low oxygen). All work shall be perfumed in compliance with applicable OSHA regulations.

F. The Contractor shall only stage its equipment in areas designated by the City. Equipment shall not be staged for an excessive period of time. Staged equipment shall not negatively impact plant operations. The City shall define an excessive period of time and negative impact on plant operations.

G. Plant water systems shall be made available to the Contractor free of charge, with possible interruption, provided the use of these City-owned utilities is not determined by the City to be excessive. Connection to existing plant utilities shall be made by the Contractor or their subcontractor at their expense. The Contractor shall inform the City in writing of its needs and request that the City designate which connections may be made. The Contractor shall determine the extent to which existing City utilities are adequate for their needs without impacting City operations.

H. Utility taps, connections, and accessory equipment shall be maintained by the Contractor in a workmanlike manner in accordance with the rules and regulations of the City.

I. Upon completion of a Work Order, the Contractor shall remove all taps connections, and accessories at its expense so as to leave the utilities and the facilities in its original condition.

J. If Contractor-owned, mobile on-site dewatering equipment is utilized, filtrate from these watering activities shall be directed to a location identified by the City and the flow rate shall not exceed 500 gpm. The filtrate will be treated at the City plant prior to discharge.

3.04 SOLIDS REMOVAL AND LOADING - GENERAL

A. Solids removal activities shall not affect the normal operation of the adjacent treatment plant process unit(s).

B. Equipment and procedures used to remove solids shall not damage City owned equipment, structures, or other appurtenances.

C. The City will not allow return of wash water and supernatant water from solids transportation containers and/or process units.

D. Except as noted in Paragraph 3.04.C, removal and loading activities shall not allow transfer of solids to any other plant process unit.

E. The removed material shall be immediately placed in transport containers and shall not be stockpiled in the basins, channels, wet wells, etc.

F. Access to the plan process units shall be provided only through existing openings.

G. Pending written approval from the City, if a solids load does/will not pass project site paint filter testing, the City will collect a representative sample(s) of the loaded solids and the City will measure the percent solids of this material using a halogen moisture analyzer. The measured percent solids and net tonnage of each load will be used to calculate the pay dry tonnage of each load. This loading, transportation, and disposal option is intended to address a small percentage of the total loads removed from each wet well or process unit and is intended primarily for the loads associated with the initial portion of solids removed.

H. Except as noted in Paragraph 3.04.G, the Contractor shall dewater the removed solids so that it passes the paint filter test. Paint filter tests shall be run on a representative sample from each load prior to departure, in the presence of City and Contractor representatives. If the hauled material does not pass the paint filter test at the landfill, the Contractor shall be responsible for any additional charges incurred.

I. The Contractor shall not operate City owned equipment without written permission from the City.

J. The City will aim to provide offline facilities according to the Contractor's submitted progress schedule.

K. Detached equipment discovered during removal activities (e.g., pipe sections, fittings, diffuser heads, etc.) shall remain the property of the City.

L. Solids shall be removed from each facility until either no more solids remain (the structure is clean) or the net weight limit identified for each facility in the applicable Work Order is reached. Additional solids removal from each facility must be pre-approved in writing by the City.

M. Facilities shall remain accessible and free from foreign material until the City has inspected the cleaned surfaces.

N. All removed solids shall become the property of the Contractor.

O. Solids removal shall be completed at each identified area or process unit prior to mobilizing to the next identified process unit.

P. Solids removal and loading activities shall be conducted within the limits of the City owned facilities.

3.05 SOLIDS REMOVAL AND LOADING – WATER FACILITIES

A. Other facilities include: reactor basins, chlorine contact basins, channels, junction boxes, and other structures.

B. Contractor shall follow the Maintenance of Plant Operations Procedures described in Section 01110 Summary of Work and as noted on the drawings.

C. Solids removal shall include low pressure washing of all surfaces (including walls, floors, columns, and roof) that is sufficient to remove caked-on solids without damage to the existing surfaces and coatings. This shall not include the removal of grime or stains.

D. These facilities shall be considered clean when the City determines that the level of solids remaining in each structure is less than an average depth of one (1) inch across the bottom of the structure and there shall be no floatable materials remaining.

3.06 SOLIDS TRANSPORTATION

A. Watertight roll off containers and/or watertight end-dump trailers shall be used to transport the removed solids.

B. Each transport container shall be equipped with a tarpaulin cover, excluding enclosed containers. At minimum, the containers shall be covered while not in use and during transportation.

C. End-dump trailers shall have one of three acceptable combinations of manual locking turnbuckles on their tailgate: 1) two turnbuckles on the bottom of the gate; 2) one turnbuckle on the bottom and one on each side for a total of three turnbuckles; or 3) four turnbuckles in total with two on each side.

D. Samples for each load shall be collected and a paint filter test conducted. Test results shall be recorded on the load manifest and submitted with the invoice.

E. Loads shall not be hauled with any visible amount of supernatant water following temporary storage.

F. Transport rigs shall be properly permitted, registered, and/or licensed by the applicable state and local organizations. Associated numbers/tags shall be properly displayed on each transport rig.

G. Tare weights of each rig shall be measured when the rig is initially put into service for a given work order and as directed by the City thereafter.

H. Containers containing removed material shall be transported and disposed within 24 hours. This requirement shall not apply to partially filled transportation containers resulting from work delays outlined in Paragraph 3.04.H; however, the City reserves the right to require transport and disposal of these containers in the event nuisance conditions develop as a result of container storage at the plant site.

I. The Contractor shall prepare and submit a copy (original top copy) of a completely executed five-part paper manifest for each load transported. Written approval of the manifest content and format shall be obtained from the City Health Department and the City Wastewater Operations Branch.

J. Actual gross weights and actual tare weights shall be measured on certified public scales (calibrated by a State of Texas licensed organization) provided by the Contractor.

K. Containers used to transport each load of removed material shall be empty prior to filling. The tare weight of each container shall be measured prior to filling. These tare weights shall be submitted with each invoice.

L. Transportation rigs shall not be allowed to leave the plant site if leakage is observed.

3.07 SOLIDS DISPOSAL

A. The Contractor shall identify the landfill(s) in which the removed solids shall be disposed.

B. The Contractor shall be responsible for preparing a waste profile that is representative of the solids to be removed and obtaining approval of this profile by the landfill company.

C. The characteristically non-hazardous removed solids shall be handled as a Special Waste as per applicable state and Federal requirements, as well as the requirements of the utilized landfill organization. These solids shall be placed in a Municipal Solid Waste landfill that is permitted to accept Special Waste (e.g., Type I or Type IV landfill).

D. The landfill shall have on all-weather access at the point of disposal.

E. The Contractor shall immediately notify the City of failed paint filter test results at the landfill.

3.08 FIELD QUALITY CONTROL

A. The City will provide an on-site representative during construction activities. This representative will perform inspections, tests, and other services. The Contractor shall assist and cooperate with the City representative.

B. The Contractor shall provide the City with adequate notice of plans to haul a load, thereby giving the City an option to participate in paint filter testing on the loaded solids prior to transportation.

C. The City will examine the condition of each structure and the associated equipment upon removal of the solids by the Contractor. The results of this examination will be documented in a log sheet, photographs, and/or video.

D. At the end of each work day, the facilities shall be washed down and left in a neat and orderly condition.

E. The condition of the plant facilities shall be equal to or better than they were when the Contractor arrived.

F. The Contractor shall remove all materials, equipment, supplies, etc. from the wet wells and process units prior to mobilizing the next wet well or process unit.

G. Final cleanup shall be complete prior to final inspection.

3.09 RE-MOBILIZATION

A. If after the initial mobilization, the City requests the Contractor to remove its equipment from City facilities for any reason, a remobilization fee shall be paid to the Contractor upon resumption of solids removal activities.

3.10 CLOSEOUT PROCEDURES

A. All solids removal, loading, transportation, and disposal activities shall be complete prior to the Contractor requesting issuance of a Certificate of Substantial Completion. The Contractor shall provide a punch list of items to be inspected for Substantial Completion.

B. All complete and correct items identified on the punch list shall be completed and corrected by the Contractor in the time period specified on the Certificate of Substantial Completion.

C. The Contractor shall complete or correct all items on the punch list prior to final inspection and no new items shall be added in order to obtain final completion and final payment.

3.11 DEMOBILIZATION

A. The Contractor's equipment, materials, and supplies shall be removed from the project site within 14 calendar days of completing the work.

END OF SECTION

SECTION 02467A

DRILLED CONCRETE PIERS

PART 1 GENERAL

1.01 SUMMARY

A. Section includes: Drilled concrete piers.

B. Related sections:
1. The Contract Documents are complementary; what is called for by one is as binding as if called for by all.
2. It is the Contractor's responsibility for scheduling and coordinating the Work of subcontractors, suppliers, and other individuals or entities performing or furnishing any of Contractor's Work.
3. The following Sections are related to the Work described in this Section. This list of Related Sections is provided for convenience only and is not intended to excuse or otherwise diminish the duty of the Contractor to see that the completed Work complies accurately with the Contract Documents.
   a. Section 03200 – Concrete Reinforcing.
   b. Section 03300 – Cast-in-Place Concrete.

1.02 REFERENCES

A. American Concrete Institute (ACI):
1. 211.1 – Standard Practice for Selecting Proportions for Normal, Heavyweight, and Mass Concrete.
2. 350 – Code Requirement for Environmental Engineering Concrete Structures and Commentary.

B. ASTM International (ASTM):
1. C 31 – Standard Practice for Making and Curing Concrete Test Specimens in the Field.
2. C 39 – Standard Test Method for Compressive Strength of Cylindrical Concrete Specimens.
3. C 143 – Standard Test Method for Slump of Hydraulic-Cement Concrete.
4. C 172 – Standard Practice for Sampling Freshly Mixed Concrete.
5. C 192 – Standard Practice for Making and Curing Concrete Test Specimens in the Laboratory.

1.03 DEFINITIONS

A. Cementitious materials: Defined as portland cement and pozzolan admixture.

1.04 SUBMITTALS

A. General: Submit in accordance with Section 01330.

B. Shop drawings:
   1. Reinforcement:
      a. Bar bending and placement drawings as specified in Section 03200.
      b. Certified copy of mill test on concrete reinforcement as specified in Section 03200.
   2. Concrete mix design for drilled piers: As specified in Section 03300.

C. Test reports:
   1. Certified copy of mill test on concrete reinforcement as specified in Section 03200.
   2. Concrete testing requirements as specified in Section 03300.
   3. Records of field measurements of concrete slump and concrete cylinder compression test results.

D. A list and description of proposed equipment to be used for the construction of piers such as cranes, drills, cleaning equipment, and tremie concrete pumps.

E. Details of overall construction operation, sequence, and drilling construction methods.

F. Qualifications of crew for review at bid time.
   1. Drilled pier contractor: Name, address, and qualifications. Submit written description of equipment and techniques proposed for use. Submit names and references for 5 projects of similar size completed within 3 years of the bid date when requested by the Engineer.
   2. Geotechnical Engineer: Name, address, and qualifications.
   3. Cross-hole Sonic Log Testing Organization and Personnel: The name of the testing organization and the names and qualifications of the personnel conducting the cross-hole sonic log tests

   Substitution of approved personnel will not be allowed without written authorization by the Owner.

G. Pier location plan and location information:
   1. Pier layout plan: Pier plan showing location indicated on the Drawings, including:
      a. Assigned number for each pier as identification for use in pier installation record.
      b. Pier tip elevation.

H. Pier location survey.

I. Record of drilling data for each pier placed and key plan of drilling record.

1.05 QUALITY ASSURANCE

A. Contractor qualifications:
   1. The Contractor shall be regularly engaged in the installation of drilled piers foundation systems.
   2. Have a minimum of 10 years previous experience on projects of similar or larger size, complexity, and subsurface conditions.

3. The job supervisor directly responsible for pier installation shall have continuous experience on drilled pier installation throughout the last 10 years.
4. The crane operators or “keymen” who give directions to the crane operators shall have at least 2 years of experience.

B. Geotechnical Engineer:
1. Registered engineer, licensed in the State of Texas, and engaged primarily in the practice of geotechnical engineering.
2. Minimum of 10 years' experience in the Houston area with projects including similar subsurface materials, groundwater conditions, pier sizes, and construction techniques.

C. Cross-hole Sonic Log Testing Organization and Personnel:
1. The testing organization shall have performed cross-hole sonic log tests on a minimum of three deep foundation projects in the last two years.
2. Personnel conducting the tests for the testing organization shall have a minimum of one year experience in cross-hole sonic log testing and interpretation.

D. Pre-installation conference:
1. Schedule and conduct pre-installation conference at least 10 days prior to drilling.
   a. Provide additional conferences if necessary to discuss specific drilling and subgrade conditions.
   b. Notify Engineer of location and time of each conference.
2. Required attendees:
   a. Contractor.
   b. Owner.
   c. Engineer.
   d. Contractor’s Geotechnical Engineer.
   e. Owner’s Geotechnical Engineer.
   f. Drilled Pier Contractor.
   g. Ready-mix concrete supplier.
   h. Owner's independent testing laboratory.
   i. Subcontractor providing Cross-hole sonic log testing of drilled piers.
3. Agenda:
   a. Determination of required bearing stratum and when the minimum required embedment has been achieved.
   b. Procedures and protection of the hole, use of casing, and cleaning out of loose material.
   c. Procedures for installation of belled end.
   d. Placement of reinforcing steel.
   e. Placement of concrete.
   f. Cross hole sonic log testing.
   g. Boring Records form.
   h. Requirements and coordination for inspections and special inspections.
   i. Other Specification requirements requiring coordination between parties to the work.
4. Prepare and submit minutes of the pre-installation conference to all involved parties.

E. Drilling observations:
   1. Contractor shall employ a registered geotechnical engineer, licensed in the State of Texas, to provide continuous on-site observation of the pier drilling operation. Piers shall not be installed unless the Engineer and Geotechnical Engineer are present.
   2. Responsibilities of the Geotechnical Engineer include, but are not limited to observation of material excavated from pier shafts in order to determine the depth at which the designated pier bearing material has been reached, determination of whether or not this bearing material is of sufficient quality to sustain the pier design loads recommended in the soils investigation report for this project, and provision of geotechnical design recommendations if foundation design or construction modifications are required due to variations in actual site conditions.

PART 2 PRODUCTS

2.01 MATERIALS

A. Reinforcing steel: Use reinforcing steel as specified in Section 03200.

B. Tie wire: Use Number 18 double annealed iron wire, tie wire.

C. Concrete: Provide and install Class P concrete as specified in Section 03300.

D. Steel casing: Steel casing for drilled piers shall conform to ASTM A 252, Grade 2. The cutting edge of steel casing shall be tempered, and the casing smooth. The use of steel casings is anticipated on this site.

E. Access Tubes for Cross-hole Sonic Log Testing:
   1. Access tubes for cross-hole sonic log testing shall be steel pipe of 0.145 inch minimum wall thickness and at least 1-1/2 inch inside diameter.
   2. The access tubes shall have a round, regular inside diameter free of defects and obstructions, including all pipe joints, in order to permit the free, unobstructed passage of 1.3 inch maximum diameter source and receiver probes used for the cross-hole sonic log tests. The access tubes shall be watertight, free from corrosion with clean internal and external tubes to ensure good bond between the concrete and the access tubes. The access tubes shall be fitted with watertight threaded PVC caps on the bottom and on the top.

F. Grout: Grout for filling the access tubes at the completion of the cross-hole sonic log tests shall be neat cement grout with a maximum water/cement ratio of 0.45.

PART 3 EXECUTION

3.01 INSTALLATION

A. General:
   1. Install piers only in the presence of the Engineer.
   2. Piers that fail to meet the requirements of these Specifications, including requirements for alignment and piers which for other reasons are unacceptable will be rejected.
   3. Correct damaged or rejected piers by methods acceptable to the Engineer.

B. Drilling:
   1. Drill holes by means of a power driven, rotary bucket, rotary auger type, or core barrel foundation drilling machine designed to excavate a cylindrical shaft:
      a. Have sufficient power and cutting capacity to excavate the pier holes to the required depths into the soil or rock at the site.
   2. Use drilling method which prevents the shaft sidewalls from caving in or sloughing into the excavated hole, except that dewatering will not be permitted.
   3. Keep excavated materials at a distance that will prevent their re-introduction to the pier.
   4. Proceed with the work in the “wet” if the groundwater level is found above pier tip elevation.
   5. Do not drill holes within 4 pier diameters (center-to-center) of a previously drilled hole until after the concrete in the previous hole has set up, but in no case until the concrete has been placed for at least 15 hours.
   6. Do not drill holes until the excavation or fill in the area in which the shafts are to be located has been completed to the elevations indicated on the Drawings.
   7. Clean out the hole until no more than 1/4 inch of loose or soft material is left in the bottom of the hole.
   8. Clean and protect top of holes to prevent soil from falling into hole.
   9. Drill piers from the ground surface through the overlying soils and provide the minimum embedment into the bearing stratum/material indicated on the Drawings.
      a. Pier drilling operations shall be continuously observed by a registered Geotechnical Engineer employed by the Contractor. The Geotechnical Engineer employed by the Contractor shall determine the final bottom of hole elevation.
      b. Explore bearing stratum below pier bearing with a probe. Probe to depth below the bearing elevation of the pier that is not less than the diameter of the bearing area, unless otherwise directed by the Contractor's Geotechnical Engineer.
      c. Excavate for drilled pier bells immediately after confirmation of acceptable bearing material.
         1) Provide bell dimensions as indicated on the Drawings.
         2) Limit bell diameter to not more than 2.5 times pier shaft diameter.
   10. If observations by the Geotechnical Engineer during drilling indicate that subgrade material characteristics vary or are not adequate to provide the load capacities indicated in the geotechnical investigation report, or the depth from

the top of the drilled pier to the required bearing material varies by more than 15 percent from the depth indicated on the drawings, immediately notify the Engineer. Do not proceed with drilling or construction until Engineer has determined what modifications, if any, are required to bring the design of the piers and structure into conformance with actual subgrade conditions.

C. Contractor's Geotechnical Engineer shall make a complete record of drilling for each pier, and submit to Engineer upon completion of day's work.

D. Reinforcing steel:
   1. Upon completion of drilling, position the reinforcing steel cage in the pier shaft as indicated on the Drawings and suspend it above the bottom of excavation before any concrete is placed in the shaft.
   2. Support the reinforcing steel cage so that it rotates freely just prior to final suspension.
   3. If soil caving occurs after reinforcing steel is placed and before placement of concrete, remove the reinforcing steel and ream the hole to permit repositioning of the cage.
   4. Support the cage in a manner that will assure that it remains centered in the pier shaft during placement of concrete.
      a. Use plastic roller type centering devices attached to spiral reinforcing bars.
      b. The centering devise shall position reinforcing cages in center of hole and provide proper cover for reinforcing bars.
   5. Install dowels from piers to walls, columns, or slabs by tying to main reinforcement cage, not by "stabbing" into plastic concrete.

E. Concrete:
   1. Immediately after acceptance of the excavation, place concrete.
   2. Place concrete for a given drilled pier shaft during the same work day as drilling of that shaft.
   3. Placement of concrete shall be as specified for dry or wet conditions as may be applicable for the conditions found at the time of the work.
   4. During concrete placement, take care to prevent concrete from hitting the sides of the steel reinforcing bar cage which will cause segregation.
   5. To prevent segregation, do not allow concrete to fall more than 5 feet.
   6. Proceed with concrete placement that starts underwater, using underwater placement requirements until the hole is completely filled.
      a. Do not dewater the shaft after partial concrete placement.
   7. Provide for a supply of concrete that is adequate to complete placement on any given drilled pier in one continuous uninterrupted operation without cold joints.
   8. Construct concrete work in a manner that dense, monolithic concrete is provided throughout the full length and diameter of the drilled pier.
   9. Water in excavation:
      a. Excavations containing more than 3 inches of water shall be pumped dry prior to concrete placement.
         1) Except for the bottom 3 inches, do not drop concrete through water:
      b. In a dry excavation, place concrete with a concrete chute or pumping method acceptable to the Engineer.

c. Direct the flow of concrete down the center of the pier shaft in order to minimize sloughing of the sides of the hole and segregation of the concrete on the reinforcing steel.

10. Water seepage:
    a. If seepage occurs at such a rate that the concrete cannot be properly placed, even if the pier hole is cased, place concrete using the “tremie” method:
    b. Use a tremie pipe having a disposable plug that keeps the tremie free of fluid until the plug is blown out by the concrete pressure.
    c. Preferably, use a tremie pipe which is 12 inches, but not less than 8 inches in diameter.
    d. Alternatively, use pumped concrete discharging through a pipe at least 5 inches in diameter.
    e. Use a tremie or pump pipe having watertight joints.
    f. Provide for no more than 3 inches of height between the bottom of the tremie pipe and the bottom of excavation during initial concrete placement.
    g. Provide positive control to make certain that the bottom of the tremie or pump pipe is at all times below the concrete surface.
    h. At least a 1 foot head of concrete shall be maintained above the top of the water.

F. Temporary casing:
1. Provide and use temporary casing for installation of piers.
    a. Withdraw casing as the concrete is placed:
2. Provide steel casing onsite in appropriate lengths.
3. Case the drilled pier holes through any fill and native soil or rock as required to maintain a stable excavation.
4. Withdrawn casing as concrete placement proceeds while maintaining at least 3 feet of concrete depth over the bottom of the casing pipe.
5. Use steel casing with an outside diameter at least as large as the design pier shaft diameter.
6. Use a casing wall thickness such that it is not damaged by water or ground pressures or by the stresses of installation.
7. Attach cutting teeth to the casing, if required to penetrate to the planned depth.
8. Use casing length so that at the end of drilling, the top of the casing projects above the ground surface and any adjacent mound of drill cuttings.
9. Provide positive control to make certain that the bottom of the casing is at least 3 feet below the top of the concrete being placed to prevent a reduction in the diameter of the pier shaft due to earth pressure and to prevent insitu materials from falling into and mixing with the concrete.

G. Cave-ins:
1. Remove soil which sloughs into the excavated pier shaft prior to concrete placement:
2. During concrete placement, if the Engineer has reasons to suspect that concrete was breached by the soil or that the pier, for any other reason, may contain extraneous material, or otherwise is not in conformance with Drawings and Specifications, the Engineer may order testing of the pier by coring or other methods:

a. Pay for testing and additional construction as required by the Engineer, if the work is found defective.
b. If work is found to be not defective, testing cost will be paid by the Owner.

H. Where required due to pier being constructed too high, cut off piers to the butt elevations indicated on the Drawings.

I. Access tubes for cross-hole sonic log testing.
1. The Contractor shall install access tubes for cross-hole sonic log testing in pier shafts of all piers to permit access for the cross-hole sonic log testing probes. If, in the opinion of the Engineer, the condition of the shaft excavations permits construction of shafts in the dry, the Engineer may specify that the access tubes be omitted.
2. The Contractor shall securely attach the access tubes to the interior of the reinforcement cage of the pier shaft. The access tubes shall be placed inside the spiral or hoop reinforcement and six inches clear of the vertical reinforcement.
3. The access tubes shall be installed in straight alignment and as near to parallel to the vertical axis of the reinforcement cage as possible. The access tubes shall extend from the bottom of the reinforcement cage to at least two feet above the top of the shaft. Splice joints in the access tubes, if required to achieve full length access tubes, shall be watertight. The Contractor shall clear the access tubes of all debris and extraneous materials before installing the access tubes. Care shall be taken to prevent damaging the access tubes during reinforcement cage installation and concrete placement operations in the shaft excavation.

J. The access tubes shall be filled with potable water as soon as possible after concrete placement (but no later than one day after concrete placement), and the top watertight threaded PVC caps shall be reinstalled.

K. Site tolerances:
1. Pier installation tolerances:
a. Deviation of center of pier butts: Not deviate from locations indicated on the Drawings more than 1.5 inches in any direction.
b. Deviation of elevation of pier butts: Not more than 1 inch higher nor more than 3 inches lower than elevation indicated on the Drawings.
c. Deviation of piers from vertical: Not more than 1/4 inch per foot of length.
d. After installation, a line from center of butt to center of tip shall be wholly within body of pier.

L. Costs associated with Engineer’s structural review of any piers constructed outside the specified tolerances, or Engineer’s structural review of evaluations conducted by others, shall be the responsibility of the Contractor.

3.02 FIELD QUALITY CONTROL

A. Provide Contractor quality control as specified in Section 01450.

B. Inspection of drilled hole:

1. If inspection of hole is required by Engineer, dewater holes to make the holes accessible to inspection and construction personnel.
2. Provide fresh air and adequate light for workmen and Engineer during such time that they occupy the shafts.
3. Test each drilled hole for toxic or explosive gas prior to entry into the hole.

C. Field measurements:
1. Pier location survey:
   a. After piers are installed and prior to placing reinforcing steel, formwork, or concrete for the structure, prepare pier location survey showing coordinates of final location of butt of piers and elevations of butt of piers to accuracy of plus or minus 0.01 feet.
   b. Pier location survey shall be performed by Surveyor licensed in the state where the Project is located.
   c. Provide survey that includes as minimum following information:
      1) Location coordinates of:
         a) Location of pier butts as indicated on the Drawings.
         b) Location of pier butts as installed.
         c) Calculate distance between location coordinates of pier butts as indicated on the Drawings and actual location coordinates of pier butts as installed.
      2) Elevation of pier butts:
         a) Elevation of pier butts as indicated on the Drawings.
         b) Elevation of pier butts as installed.
         c) Calculate difference in elevations of pier butts as indicated on the Drawings and actual elevation of pier butts as installed.
      3) Highlight piers that are not within specified tolerances for location in plan and butt elevation.
      4) Provide preceding information in tabular form and keyed to a pier plan by pier number:
         a) Submit pier plan that shows each pier for each structure.
   d. Engineer will utilize pier location survey information to evaluate acceptability of pier locations and elevations.

D. Cross-hole sonic log testing:
   a. Provide access tubes for cross-hole sonic log testing on completed drilled piers.
      1) All load test piers shall have access tubes for cross-hole sonic log testing.
   b. After placing the pier concrete and before beginning the cross-hole sonic log testing of the pier, inspect the access tubes. Each access tube that the test probe cannot pass through shall be replaced, at the Contractor's expense, with a 2-inch diameter hole cored through the concrete for the entire length of the pier. Unless directed otherwise by the Engineer, the cored holes shall be located approximately 6 inches inside the reinforcement and shall not damage the reinforcement. Descriptions of inclusions and voids in cored holes shall be logged and a copy of the log shall be submitted to the Engineer. Finding from cored holes shall be preserved, identified as to location, and made available for inspection by the Engineer.

E. The Engineer may direct that additional testing be performed at a pier. If subsequent testing at a pier indicates the presence of defect(s) in the pier, the testing costs and the delay costs resulting from the additional testing shall be borne by the Contractor. If this additional testing indicates that the shaft has no defect, the testing costs and delay costs resulting from additional testing will be paid by the Owner.

F. For all piers determined to be unacceptable, submit a plan for further investigation or remedial action to the Engineer for acceptance. All modifications to the dimensions of the piers, as shown in the Plans, required by the investigation and remedial action plan shall be supported by calculations and working drawings. All investigation and remedial corrective procedures and designs shall be submitted to the Engineer for acceptance. Do not begin repair operations until receiving the Engineer's acceptance of the investigation and remedial action plan.

G. At the request of the Engineer, drill a core-hole in any questionable quality shaft (as determined from cross-hole sonic log testing and analysis or by observation of the Geotechnical Engineer) to explore the shaft condition.
   1. Prior to beginning the coring, submit the method and equipment used to drill and remove core from pier concrete to the Engineer. Do not proceed with coring until receipt of written acceptance from the Engineer. The coring method and equipment shall provide for complete core recovery and shall minimize abrasion and erosion of the core.
   2. If a defect is confirmed, the Contractor shall pay for all coring costs. If no defect is encountered, the Owner will pay for all coring costs. Materials and work necessary, including engineering analysis and redesign, to effect corrections for pier defects shall be furnished to the satisfaction of the Engineer at no additional cost to the Owner.

H. All access tubes and cored holes shall be dewatered and filled with grout after tests are completed. The access tubes and cored holes shall be filled used grout tubes that extend to the bottom of the tube or hole or into the grout already placed.

3.03 FIELD QUALITY ASSURANCE

A. Provide Owner field quality assurance as specified in Section 01450.

B. Special inspections and tests, and structural observations:
   1. Drilled Pier Foundations (IBC Section 1705.8):
      a. Special inspections and tests as indicated in Table 02467A-1 below.

Table 02467A-1 - SCHEDULE OF SPECIAL INSPECTIONS AND TEST: DEEP FOUNDATIONS - CAST-IN-PLACE

Item No.	Inspections / Tests	Reference	Frequency of Inspection During Task Listed	
			Continuous	Periodic
1	Confirm that materials conform to approved construction documents.		X	

Table 02467A-1 - SCHEDULE OF SPECIAL INSPECTIONS AND TEST: DEEP FOUNDATIONS - CAST-IN-PLACE				
Item No.	**Inspections / Tests**	**Reference**	**Frequency of Inspection During Task Listed**	
			Continuous	**Periodic**
2	Determine capacity of test elements. Conduct additional load tests as required.		X	
3	Determine required penetration(s) to achieve specified design capacity.		X	
4	Verify element location and alignment/plumbness.		X	
5	Observe drilling and casting operations. Maintain complete and accurate records for each element. Record element diameter, diameter of belled bearing end (if applicable), length, embedment into rock or other bearing material, characteristics of bearing material observed during drilling, and volume of concrete or grout placed during casting.		X	

b. Inspector qualifications: Registered geotechnical engineer, licensed in the State where the work is constructed, and having a minimum of 10 years of experience in the observation of drilled piers, or his/her approved designee.

C. Cross-hole sonic log testing:
1. Owner shall provide cross-hole sonic log testing and analysis on completed drilled piers.
2. The testing and analysis shall be performed by the independent testing organization employed by the Owner and approved by the Engineer.
   a. The testing shall be performed after the pier concrete has cured for at least 72 hours after completion of placement.
3. The independent testing organization employed by the Owner shall submit the results and analysis of the cross-hole sonic log testing for each pier tested to the Engineer and the Owner's Geotechnical Engineer for acceptance. The Owner's Geotechnical Engineer will determine final acceptance of each shaft, based on the cross-hole sonic log test results and analysis for the tested shafts, and will provide a response to the Contractor within three working days after receiving the test results and analysis submittal.

D. Periodic observation of drilling and installation by Owner's Geotechnical Engineer.

E. Concrete testing, as specified in Section 03300, shall be provided by Owner's testing laboratory.

3.04 ADJUSTING

A. Correction of defective pier work:

1. Pier work not in accordance with the requirements indicated on the Drawings and specified in the Specifications is considered defective.
2. Take corrective measures acceptable to the Engineer, if piers are damaged, out of tolerance, mislocated, or otherwise defective:
   a. Cost of redesign of foundation elements by the Engineer required by reason of defective pier work shall be paid by Contractor.
   b. Allow 10 working days from submittal of pier location survey, for design of corrections for defective pier work.
3. Measures to be used to correct defective pier work will be selected by the Engineer. Corrective measures that may be acceptable to the Engineer include:
   a. Installation of additional piers at locations selected by the Engineer.
   b. Redesign of pier caps and/or slabs to accommodate piers that were installed out of tolerance.
4. Leave piers which are not accepted in the ground. Cut off such piers at least 2 feet below bottom of pier cap and fill such holes with compacted aggregate base course material.
5. Fill holes drilled for piers that are not used with Class C concrete.

END OF SECTION

SECTION 03055

ADHESIVE-BONDED REINFORCING BARS AND ALL THREAD RODS

PART 1 GENERAL

1.01 SUMMARY

A. Section includes: Bonding reinforcing bars and all thread rods in concrete using adhesives as specified.

B. Use this Section for the following:
   1. Concrete for water-containing structures, including the following areas:
      a. Filtered Pipe Gallery.
      b. Filter Effluent Channel.
      c. Overflow Structure.
      d. Clearwell Approach Channel.
      e. Clearwell.
   2. Concrete for Sodium Bisulfite Facility.
   3. Concrete for Emergency Generator Facility.

C. Related sections:
   1. The Contract Documents are complementary; what is called for by one is as binding as if called for by all.
   2. It is the Contractor's responsibility for scheduling and coordinating the Work of subcontractors, suppliers, and other individuals or entities performing or furnishing any of Contractor's Work.
   3. The following Sections are related to the Work described in this Section. This list of Related Sections is provided for convenience only and is not intended to excuse or otherwise diminish the duty of the Contractor to see that the completed Work complies accurately with the Contract Documents.
      a. Section 01110 – Summary of Work.
      b. Section 03200 – Concrete Reinforcing.
      c. Section 05501 - Metal Fabrications.

1.02 REFERENCES

A. American National Standards Institute (ANSI):
   1. Standard B212.15 – Carbide Tipped Masonry Drills and Blanks for Carbide Tipped Masonry Drills.

B. ASTM International (ASTM):
   1. C 881 – Standard Specification for Epoxy-Resin-Base Bonding Systems for Concrete.

C. ICC Evaluation Service, Inc. (ICC-ES):
   1. AC308 – Acceptance Criteria for Post-Installed Adhesive Anchors in Concrete Elements.

D. NSF International (NSF)
   1. 61 - Drinking Water System Components - Health Effects.

E. Society for Protective Coatings (SSPC):
   1. Surface Preparation Standards (SP)
      a. SP-1 – Solvent Cleaning.

1.03 SUBMITTALS

A. Product Data: Furnish technical data for adhesives, including:
   1. Manufacturer’s printed installation instructions (MPII).
   2. Independent laboratory test results.
   3. Handling and storage instructions.
   4. Adhesives installed at locations in direct contact with potable water or with process water in treatment: Evidence of compliance with NSF-61 requirements.

B. Quality control submittals:
   1. Adhesive manufacturer's past project experience data on at least 3 similar projects supplied with proposed products within the last 3 years.
   2. Special inspection: Provide detailed step-by-step instructions for the special inspection procedure in accordance with the building code as specified in Section 01110.
   3. ICC Evaluation Service, Inc., Evaluation Services Report in compliance with the AC308-Acceptance Criteria for Post-Installed Adhesive Anchors in Concrete Elements.
   4. Installer qualifications: Submit evidence of successful completion of certification program for each installer of work described in this Section.
   5. Batch test reports for each batch of product delivered to site. Provide manufacturer's written certification that each batch delivered meets these Specifications, the intended uses on project, including capability to bond to damp concrete surfaces. Certification shall include batch test results for each product.
   6. Epoxy manufacturer's written letter of certification identifying Contractor's employees qualified for operation of manufacturer's equipment, certified for installation of products, and trained through jobsite instruction conducted by manufacturer.
   7. Copy of epoxy manufacturer's equipment service and repair manuals for each type of equipment delivered to project site.

1.04 QUALITY ASSURANCE

A. Qualifications:
   1. Installer qualifications:
      a. All individuals performing the work described in this Section shall be certified by a qualified organization to install adhesive anchors by following the MPII. Those organizations deemed to be qualified are:
         1) ACI-CRSI Adhesive Anchor Installer Certification Program.
         2) An adhesive anchor manufacturer’s certification program, subject to acceptance by the Engineer.

1.05 DELIVERY, STORAGE, AND HANDLING

A. Storage and protection:
   1. Store adhesives and adhesive components on pallets or shelving in a covered-storage area.
   2. Control temperature above 60 degrees Fahrenheit and dispose of product if shelf life has expired.
   3. If stored at temperatures below 60 degrees Fahrenheit, test components prior to use to determine if they still meet specified requirements.

1.06 PROJECT CONDITIONS

A. Seismic design category: A.

PART 2 PRODUCTS

2.01 GENERAL

A. Like items of materials: Use end products of one manufacturer in order to achieve structural compatibility and singular responsibility.

B. Material requirements:
   1. Adhesives installed at locations in direct contact with potable water or process water in treatment: Listed as acceptable under NSF 61 based on testing by a recognized national laboratory acceptable to the Engineer. Confirm availability of current listing for products listed in this Section before installation.

2.02 ADHESIVE FOR SELF-CONTAINED CARTRIDGE SYSTEM

A. Adhesive shall have a current ICC Evaluation Service report documenting acceptance under AC308 for use with cracked concrete and for the seismic design categories specified.

B. Materials:
   1. In accordance with ASTM C 881, Type IV, Grade 3, Class B or C depending on site conditions.
   2. 2-component, 100 percent solids, insensitive to moisture.
   3. Cure temperature, pot life, and workability: Compatible with intended use and environmental conditions.

C. Packaging:
   1. Furnished in side-by-side cartridges with resin and hardener components isolated until mixing through manufacturer’s static mixing nozzle. Nozzle designed to thoroughly blend the components for injection from the nozzle directly into prepared hole.
   2. Container markings: Include manufacturer's name, product name, batch number, mix ratio by volume, product expiration date, ANSI hazard classification, and appropriate ANSI handling precautions.

D. Manufacturers: One of the following or equal:
   1. Hilti, Inc., Tulsa, OK: RE 500-SD.
   2. Simpson Strong-Tie Company, Inc., Pleasanton, CA: SET-XP.

2.03 ALL THREAD RODS

A. Materials: Type 316 stainless steel as specified in Section 05501.

2.04 REINFORCING BARS

A. As specified in Section 03200.

PART 3 EXECUTION

3.01 GENERAL

A. Execution of this work is restricted to those installers certified through a qualified certification program described under Quality Assurance and accepted by the Engineer.

B. The work shall be performed in strict accordance with the accepted MPII and the following instructions. Where the accepted MPII and the following instructions conflict, the MPII shall prevail.

C. Provide adhesive packaged as follows:
   1. Disposable, self-contained cartridge system capable of dispensing multiple adhesive components in the proper mixing ratio, and fit into a manually or pneumatically operated caulking gun.
   2. Dispense components through a mixing nozzle that thoroughly mixes components.

3.02 HOLE SIZING AND INSTALLATION

A. Drilling holes:
   1. Determine location of reinforcing bars or other obstructions with a non-destructive indicator device, and mark locations with construction crayon on the surface of the concrete.
   2. Do not damage or cut existing reinforcing bars, electrical conduits, or other items embedded in the existing concrete without acceptance by Engineer.

B. Hole drilling equipment:
   1. Electric or pneumatic rotary impact type with medium or light impact.
   2. Drill bits: Carbide-tipped in accordance with ANSI B212-15 unless otherwise recommended by the manufacturer or required as a “condition of use” in the ICC Evaluation Report submitted.
   3. Hollow drill bits with flushing air systems are preferred. Air supplied to hollow drill bits shall be free of oil, water, or other contaminants that will reduce bond.
   4. Where edge distances are less than 2 inches, use lighter impact equipment to prevent microcracking and concrete spalling during drilling process.

C. Hole diameter: Reinforcing bar diameter or all thread rod diameter plus 1/8 inch.

D. Obstructions in drill path:
   1. If an existing reinforcing bar or other obstruction is hit while drilling hole, stop drilling hole and fill the hole with drypack mortar. Relocate the hole to miss the obstruction and drill another hole. Repeat the above until the hole has been drilled to the required depth.
   2. Avoid drilling an excessive number of holes in an area of a structural member, which would excessively weaken the structural member and endanger the stability of the structure. Drypack holes which hit obstructions and allow drypack to reach strength equal to the existing concrete before drilling adjacent holes. Epoxy grout may be substituted for drypack when acceptable to Engineer.
   3. When existing reinforcing steel is encountered during drilling and when acceptable to Engineer, enlarge the hole by 1/8 inch, core through the existing reinforcing steel at the larger diameter, and resume drilling at original hole diameter.
   4. Bent bar reinforcing bars: Where edge distances are critical, and striking reinforcing steel is likely, and if acceptable to Engineer, drill hole at 10 degree angle or less from axis of reinforcing bar or all thread rod being installed.

E. Install reinforcing bars and all thread rods to depth, spacings, and locations as indicated on the Drawings.
   1. Do not install adhesive-bonded all-thread rods or reinforcing bars in overhead applications.

F. Cleaning holes:
   1. Insert long air nozzle into hole and blow out loose dust. Use compressed air that is free of oil, water, or other contaminants that will reduce bond.
   2. Use a stiff bristle brush to vigorously brush hole to dislodge compacted drilling dust.
   3. Repeat step 1.
   4. Repeat above steps as required to remove drilling dust or other material that will reduce bond. The hole shall be clean and dry.

G. Cleaning reinforcing bars and all thread rods:
   1. Clean reinforcing bars and all thread rods over embedment length to bare metal, free of oil, grease, paint, dirt, mill scale, rust, or other coatings that will reduce bond.
   2. Solvent clean reinforcing bar and all thread rods over the embedment length in accordance with SSPC SP-1 Solvent Cleaning. Provide an oil and grease free surface to promote bonding of adhesive to steel.

H. Filling hole with adhesive:
   1. Fill hole with adhesive before inserting the reinforcing bar or all thread rod. Fill hole with adhesive starting from bottom of hole. Fill hole without creating air voids.
   2. Fill hole with sufficient adhesive so that excess adhesive is extruded out of the hole when the reinforcing bar or all thread rod is inserted into the hole.

3.03 MANUFACTURERS' SERVICES

A. Furnish manufacturer's representative to conduct jobsite training for proper installation, handling, and storage of adhesive, for personnel who will perform actual installation. Engineer may attend training sessions.

B. Do not install reinforcing bars or all thread rods prior to receiving adhesive manufacturer's onsite training.

END OF SECTION

SECTION 03071

EPOXIES

PART 1 GENERAL

1.01 SUMMARY

A. Section includes:
   1. Epoxy.
   2. Epoxy gel.
   3. Epoxy bonding agent.

B. Use this Section for the following:
   1. Concrete for water-containing structures, including the following areas:
      a. Filtered Pipe Gallery.
      b. Filter Effluent Channel.
      c. Overflow Structure.
      d. Clearwell Approach Channel.
      e. Clearwell.
   2. Concrete for Sodium Bisulfite Facility.
   3. Concrete for Emergency Generator Facility.

C. Related sections:
   1. The Contract Documents are complementary; what is called for by one is as binding as if called for by all.
   2. It is the Contractor's responsibility for scheduling and coordinating the Work of subcontractors, suppliers, and other individuals or entities performing or furnishing any of Contractor's Work.
   3. The following Sections are related to the Work described in this Section. This list of Related Sections is provided for convenience only and is not intended to excuse or otherwise diminish the duty of the Contractor to see that the completed Work complies accurately with the Contract Documents.
      a. Section 03072 – Epoxy Resin/Portland Cement Bonding Agent.

1.02 REFERENCES

A. ASTM International (ASTM):
   1. C 881 – Standard Specification for Epoxy-Resin-Base Systems for Concrete.
   2. C 882 – Standard Test Method for Bond Strength of Epoxy-Resin Systems Used with Concrete by Slant Shear.
   3. D 638 – Standard Test Method for Tensile Properties of Plastics.
   4. D 695 – Standard Test Method for Compressive Properties of Rigid Plastics.

B. NSF International (NSF)
   1. 61 - Drinking Water System Components - Health Effects.

1.03 SYSTEM DESCRIPTION

A. Performance requirements:
   1. Provide epoxy materials that are new.
   2. Store and use products within shelf life limitations set forth by manufacturer.
   3. Perform and conduct work of this Section in neat orderly manner.

B. Material requirements:
   1. Epoxy materials installed at locations in direct contact with potable water or process water undergoing treatment: Listed as acceptable under NSF 61 based on testing by a recognized national laboratory acceptable to the Engineer.

1.04 SUBMITTALS

A. Product Data: Submit manufacturer's data completely describing epoxy materials.
   1. Submit evidence of conformance to ASTM C 881. Include manufacturer’s designations of Type Grade, Class, and Color.
   2. Submit evidence that materials meet or exceed the specified physical characteristics.
   3. Epoxy materials in direct contact with potable water or process water in treatment: Evidence of compliance with NSF-61 requirements.

B. Quality control submittals:
   1. Manufacturer's installation instructions.

PART 2 PRODUCTS

2.01 MATERIALS

A. General: Moisture tolerant, water-insensitive, two-component epoxy resin adhesive material containing 100 percent solids, and meeting or exceeding the performance properties specified when tested in accordance with the standards specified.

B. Epoxy: Low viscosity product in accordance with ASTM C 881; Types I, II and V; Grade 1; Class C.
   1. Manufacturers: One of the following or equal:
      a. BASF, Concresive Standard LVI.
      b. Sika Corporation, Sikadur 35 Hi-Mod LV.

2. Required properties:

Table 1: Material Properties – Epoxy.		
Property	**Test Method**	**Required Results ("neat")**
Tensile Strength (7-day)	ASTM D 638	7,500 pounds per square inch, minimum.
Compressive Strength, (7-day)	ASTM D 695	11,000 pounds per square inch, minimum.
Bond Strength (2-day)	ASTM C 882	Concrete shall fail before failure of epoxy.
Notes:	Testing results are for materials installed and cured at a temperature between 72 and 78 degrees Fahrenheit for 7 days, unless otherwise noted.	

C. Epoxy gel: Non-sagging product in accordance with ASTM C 881, Types I and IV, Grade 3, Class C.
   1. Manufacturers: One of the following or equal:
      a. BASF, Concresive Paste LPL.
      b. Sika Corporation, Sikadur 31, Hi-Mod Gel.
   2. Required properties:

Table 2 – Material Properties – Epoxy Gel.		
Property	**Test Method**	**Required Results ("neat")**
Tensile Strength (7-day)	ASTM D 638	2,000 pounds per square inch, minimum.
Compressive Yield Strength (7-day)	ASTM D 695	8,000 pounds per square inch, minimum.
Bond Strength (14-day)	ASTM C 882	1,500 pounds per square inch, minimum..
Notes:	Testing results are for materials installed and cured at a temperature between 72 and 78 degrees Fahrenheit for 7 days, unless otherwise noted.	

D. Epoxy bonding agent: Non-sagging product in accordance with ASTM C 881, Type II, Grade 1, Class C.
   1. Manufacturers: One of the following or equal:
      a. BASF, Concresive Liquid LPL.
      b. Sika Chemical Corp., Sikadur 32 Hi-Mod LPL.
   2. Required properties.

Table 3 – Material Properties – Epoxy Bonding Agent		
Property	**Test Method**	**Required Results**
Tensile Strength (7-day)	ASTM D 638	4,400 pounds per square inch, minimum.
Compressive Yield Strength (7-day)	ASTM D 695	8,300 pounds per square inch, minimum.
Bond Strength (14-days)	ASTM C 882	1,800 pounds per square inch, minimum. Concrete shall fail before failure of epoxy bonding agent.
Pot Life	-	Minimum 70 minutes at 77 degrees Fahrenheit or Minimum 90 minutes at 73 degrees Fahrenheit
Notes:	Testing results are for materials installed and cured at a temperature between 72 and 78 degrees Fahrenheit for 7 days, unless otherwise noted.	

3. If increased contact time is required for concrete placement, epoxy resin/portland cement bonding agent as specified in Section 03072 may be used instead of epoxy bonding agent.

PART 3 EXECUTION

3.01 INSTALLATION

A. Install and cure epoxy materials in accordance with manufacturer's installation instructions.

B. Epoxy:
   1. Apply in accordance with manufacturer's installation instructions.

C. Epoxy gel:
   1. Apply in accordance with manufacturer's installation instructions.
   2. Use for vertical or overhead work, or where high viscosity epoxy is required.
   3. Epoxy gel used for vertical or overhead work may be used for horizontal work.

D. Epoxy bonding agent:
   1. Apply in accordance with manufacturer's installation instructions.
   2. Bonding agent will not be required for filling form tie holes or for normal finishing and patching of similar sized small defects.

END OF SECTION

SECTION 03072

EPOXY RESIN/PORTLAND CEMENT BONDING AGENT

PART 1 GENERAL

1.01 SUMMARY

A. Section includes: Epoxy resin/portland cement bonding agent.

B. Use this Section for the following:
   1. Concrete for water-containing structures, including the following areas:
      a. Filtered Pipe Gallery.
      b. Filter Effluent Channel.
      c. Overflow Structure.
      d. Clearwell Approach Channel.
      e. Clearwell.
   2. Concrete for Sodium Bisulfite Facility.
   3. Concrete for Emergency Generator Facility.

1.02 REFERENCES

A. ASTM International (ASTM):
   1. C 109 – Standard Test Method for Compressive Strength of Hydraulic Cement Mortars (Using 2-in. or [50-mm] Cube Specimens).
   2. C 348 – Standard Test Method for Flexural Strength of Hydraulic-Cement Mortars.
   3. C 496 – Standard Test Method for Splitting Tensile Strength of Cylindrical Concrete Specimens.
   4. C 882 – Standard Test Method for Bond Strength of Epoxy-Resin Systems Used With Concrete By Slant Shear.

B. Federal Highway Administration (FHWA):
   1. FHWA-RD-86-193 – Highway Concrete Pavement Technology Development and Testing Volume V: Field Evaluation of SHRP C9206 Test Sites (Bridge Deck Overlays).

PART 2 PRODUCTS

2.01 MANUFACTURERS

A. Sika Corporation, Lyndhurst, New Jersey, Sika Armatec 110.

B. Substitutions: The use of other than the specified product will be considered, providing the Contractor requests its use in writing to the Engineer. This request shall be accompanied by:

1. A certificate of compliance from an approved independent testing laboratory that the proposed substitute product meets or exceeds specified performance criteria, tested in accordance with the specified test standards.
2. Documented proof that the proposed substitute product has a 1-year proven record of performance of bonding portland cement mortar/concrete to hardened portland cement mortar/concrete, confirmed by actual field tests and 5 successful installations that the Engineer can investigate.

2.02 MATERIALS

A. Epoxy resin/portland cement adhesive:
   1. Component "A" shall be an epoxy resin/water emulsion containing suitable viscosity control agents. It shall not contain butyl glycidyl ether.
   2. Component "B" shall be primarily a water solution of a polyamine.
   3. Component "C" shall be a blend of selected portland cements and sands.
   4. The material shall not contain asbestos.

2.03 PERFORMANCE CRITERIA

A. Properties of the mixed epoxy resin/portland cement adhesive:
   1. Pot life: 75 to 105 minutes.
   2. Contact time: 24 hours.
   3. Color: Dark gray.

B. Properties of the cured epoxy resin/portland cement adhesive:
   1. Compressive strength in accordance with ASTM C 109:
      a. 3 day: 4,500 pounds per square-inch minimum.
      b. 7 days: 6,500 pounds per square-inch minimum.
      c. 28 days: 8,500 pounds per square-inch minimum.
   2. Splitting tensile strength in accordance with ASTM C 496:
      a. 28 days: 600 pounds per square-inch minimum.
   3. Flexural strength:
      a. 1,100 pounds per square-inch minimum in accordance with ASTM C 348.
   4. Bond strength in accordance with ASTM C 882 modified at 14 days:
      a. 0 hours open time: 2,800 pounds per square-inch minimum.
      b. 24 hours open time: 2,600 pounds per square-inch minimum.
   5. The epoxy resin/portland cement adhesive shall not produce a vapor barrier.
   6. Material must be proven to prevent corrosion of reinforcing steel when tested under the procedures as set forth by the FHWA Program Report Number FHWA-RD-86-193. Proof shall be in the form of an independent testing laboratory corrosion report showing prevention of corrosion of the reinforcing steel.

PART 3 EXECUTION

3.01 INSTALLATION

A. Mixing the epoxy resin: Shake contents of Component "A" and Component "B." Empty all of both components into a clean, dry mixing pail. Mix thoroughly for

30 seconds with a jiffy paddle on a low-speed with 400 to 600 revolutions per minute drill. Slowly add the entire contents of Component "C" while continuing to mix for a minimum of 3 minutes and until uniform with no lumps. Mix only the quantity that can be applied within its pot life.

B. Placement procedure:
   1. Apply to prepared surface with stiff-bristle brush, broom, or "hopper-type" spray equipment:
      a. For hand applications: Place fresh plastic concrete/mortar while the bonding bridge adhesive is wet or dry, up to 24 hours.
      b. For machine applications: Allow the bonding bridge adhesive to dry for 12 hours minimum.

C. Adhere to all limitations and cautions for the epoxy resin/portland cement adhesive in the manufacturer's current printed literature.

3.02 CLEANING

A. Leave finished work and work area in a neat, clean condition without evidence of spillovers onto adjacent areas.

END OF SECTION

SECTION 03102

CONCRETE FORMWORK

PART 1 GENERAL

1.01 SUMMARY

A. Section includes: Concrete formwork.

B. Use this Section for the following:
   1. Concrete for water-containing structures, including the following areas:
      a. Filtered Pipe Gallery.
      b. Filter Effluent Channel.
      c. Overflow Structure.
      d. Clearwell Approach Channel.
      e. Clearwell.
   2. Concrete for Sodium Bisulfite Facility.
   3. Concrete for Emergency Generator Facility.

C. Related sections:
   1. The Contract Documents are complementary; what is called for by one is as binding as if called for by all.
   2. It is the Contractor's responsibility for scheduling and coordinating the Work of subcontractors, suppliers, and other individuals or entities performing or furnishing any of Contractor's Work.
   3. The following Sections are related to the Work described in this Section. This list of Related Sections is provided for convenience only and is not intended to excuse or otherwise diminish the duty of the Contractor to see that the completed Work complies accurately with the Contract Documents.
      a. Section 03300 – Cast-in-Place Concrete.
      b. Section 03600 – Grouting.

1.02 REFERENCES

A. American Concrete Institute (ACI):
   1. 117 – Specifications for Tolerances for Concrete Construction and Materials and Commentary.

B. NSF International (NSF):
   1. 61 – Drinking Water System Components – Health Effects.

C. Underwriters Laboratories (UL).

1.03 DEFINITIONS

A. Green concrete: Concrete with less than 100 percent of the minimum specified compressive strength (f'_c).

1.04 SYSTEM DESCRIPTION

A. Design requirements:
   1. Design of concrete forms, falsework, and shoring in accordance with local, state, and federal regulations.
   2. Design forms and ties to withstand concrete pressures without bulging, spreading, or lifting of forms.

B. Performance requirements:
   1. Construct forms so that finished concrete conforms to shapes, lines, grades, and dimensions indicated on the Drawings.
   2. It is intended that surface of concrete after stripping presents smooth, hard, and dense finish that requires minimum amount of finishing.
   3. Provide sufficient number of forms so that the work may be performed rapidly and present uniform appearance in form patterns and finish.
   4. Use forms that are clean and free from dirt, concrete, and other debris.
      a. Coat with form release agent if required, prior to use or reuse.

1.05 SUBMITTALS

A. Information on proposed forming system:
   1. Submit in such detail as the Engineer may require to assure himself that intent of the Specifications can be complied with by use of proposed system.
   2. Alternate combinations of plywood thickness and stud spacing may be submitted.

B. Form release agent. NSF 61 certification prepared by NSF, Underwriters Laboratories (UL) or other, similar, nationally recognized testing laboratory acceptable to the Engineer.

1.06 QUALITY ASSURANCE

A. Qualifications of formwork manufacturers: Use only forming systems by manufacturers having a minimum of 5 years experience, except as otherwise specified, or accepted in writing by the Engineer.

B. Regulatory requirements: Install work of this Section in accordance with local, state, and federal regulations.

PART 2 PRODUCTS

2.01 MANUFACTURED UNITS

A. Forms: Built-up plywood:
   1. Built-up plywood forms may be substituted for prefabricated forming system subject to following minimum requirements:
      a. Size and material:
         1) Use full size 4-foot by 8-foot plywood sheets, except where smaller pieces are able to cover entire area.

2) Sheet construction: 5-ply plywood sheets, 3/4-inch nominal, made with 100 percent waterproof adhesive, and having finish surface that is coated or overlaid with surface which is impervious to water and alkaline calcium and sodium hydroxide of cement.

b. Wales: Minimum 2-inch by 4-inch lumber.

c. Studding and wales: Contain no loose knots and be free of warps, cups, and bows.

B. Forms: Steel or steel framed:

1. Steel forms:

a. Rigidly constructed and capable of being braced for minimum deflection of finish surface.

b. Capable of providing finish surfaces that are flat without bows, cups, or dents.

2. Steel framed plywood forms:

a. Provide forms that are rigidly constructed and capable of being braced.

b. Plywood paneling: 5-ply, 5/8-inch nominal or 3/4-inch nominal, made with 100 percent waterproof adhesive, and having finish surface that is coated or overlaid with surface which is impervious to water and alkaline calcium and sodium hydroxide of cement.

C. Form release agent.

1. Effective, non-staining, bond-breaking coating compatible with form surfaces and concrete mixes used.

2. Certified for conformance to NSF 61 and leaving no taste or odor on the concrete surface.

D. Form ties:

1. General:

a. Provide form ties for forming system selected that are manufactured by recognized manufacturer of concrete forming equipment.

b. Do not use wire ties or wood spreaders of any form.

c. Provide ties of type that accurately tie, lock, and spread forms.

d. Provide form ties of such design that when forms are removed, they locate no metal or other material within 1-1/2 inches of the surface of the concrete.

e. Do not allow holes in forms for ties to allow leakage during placement of concrete.

2. Cone-snap ties:

a. Cone-snap ties shall form a cone shaped depression in the concrete with minimum diameter of 1 inch at the surface of the concrete and minimum depth of 1-1/2 inches.

b. Provide neoprene waterseal washer that is located near the center of the concrete.

3. Taper ties:
   a. Neoprene plugs for taper tie holes: Size so that after they are driven, plugs are located in center third of wall thickness.

E. Incidentals:
1. External angles:
   a. Where not otherwise indicated on the Drawings, provide with 3/4-inch bevel, formed by utilizing true dimensioned wood or solid plastic chamfer strip on walkways, slabs, walls, beams, columns, and openings.
   b. Provide 1/4-inch bevel formed by utilizing true dimensioned wood or solid plastic chamfer strip on walkways, walls, and slabs at expansion, and construction joints.
2. Keyways: Steel, plastic, or lumber treated with form release agent.

PART 3 EXECUTION

3.01 EXAMINATION

A. Site verification of conditions:
1. Do not place concrete until forms have been checked for alignment, level, and strength, and mechanical and electrical inserts or other embedded items for correct location.

3.02 INSTALLATION

A. Forms: Built-up plywood:
1. Studding:
   a. Spaced at 16 inches or 24 inches on center.
   b. Closer spacing may be required depending upon strength requirements of the forms, in order to prevent any bulging surfaces on faces of finished concrete work.
   c. Install studs perpendicular to grain of exterior plys of plywood sheets.
2. Wales: Form wales of double lumber material with minimum size as specified in this Section.
3. Number of form reuses: Depends upon durability of surface coating or overlay used, and ability to maintain forms in condition such that they are capable of producing flat, smooth, hard, dense finish on concrete when stripped.

B. Forms: Steel or steel framed:
1. Steel forms:
   a. Adequately brace forms for minimum deflection of finish surface.
2. Steel framed plywood forms:
   a. Rigidly construct and brace with joints fitting closely and smoothly.
   b. Number of form reuses: Depends upon durability of surface coating or overlay used.
3. Built-up plywood forms: As specified in this Section may be used in conjunction with steel forms or steel framed plywood forms for special forming conditions such as corbels and forming around items which will project through forms.

C. Forms: Incidental construction:

D. Form bracing and alignment:
   1. Line and grade: Limit deviations to tolerances which will permit proper installation of structural embedded items or mechanical and electrical equipment and piping.
   2. Formwork:
      a. Securely brace, support, tie down, or otherwise hold in place to prevent movement.
      b. Make adequate provisions for uplift pressure, lateral pressure on forms, and deflection of forms.
   3. When second lift is placed on hardened concrete: Take special precautions in form work at top of old lift and bottom of new lift to prevent:
      a. Spreading and vertical or horizontal displacement of forms.
      b. Grout "bleeding" on finish concrete surfaces.
   4. Pipe stubs, anchor bolts, and other embedded items: Set in forms where required.
   5. Cracks, openings, or offsets at joints in formwork: Close those that are 1/16-inch or larger by tightening forms or by filling with acceptable crack filler.

E. Forms: Incidentals:
   1. Keyways: Construct as indicated on the Drawings.
   2. Reentrant angles: May be left square.
   3. Level strips: Install at top of wall concrete placements to maintain true line at horizontal construction joints.
   4. Inserts:
      a. Encase pipes, anchor bolts, steps, reglets, castings, and other inserts, as indicated on the Drawings or as required, in concrete.
   5. Pipe and conduit penetrations:
      a. Install pipe and conduit in structures as indicated on the Drawings, and seal with Sikaflex 2c NS EZ Mix or Engineer approved equal.

F. Form release agent:
   1. Apply in accordance with manufacturer’s instructions.

G. Form ties:
   1. Cone-snap ties: Tie forms together at not more than 2-foot centers vertically and horizontally.

3.03 FORM REMOVAL

A. Keep forms in place for at least the periods indicated in the following paragraphs.
   1. Vertical forms:
      a. Keep vertical forms in place for a minimum of 24 hours after concrete is placed.
      b. If, after 24 hours, concrete has sufficient strength and hardness to resist surface or other damage, forms may be removed.
   2. Other forms and shoring: Keep in place:
      a. Sides of footings: 24 hours minimum.
      b. Vertical sides of beams, girders, and similar members: 48 hours minimum.

c. Bottom of slabs, beams, and girders: Until concrete strength reaches specified strength f'_c or until shoring is installed.
d. Shoring for slabs, beams, and girders: Shore until concrete strength reaches specified strength.
e. Wall bracing: Brace walls until concrete strength of beams and slabs laterally supporting wall reaches specified strength.

B. Green concrete:
1. No heavy loading on green concrete will be permitted.

3.04 SURFACE REPAIRS AND FINISHING

A. Immediately after forms are removed, carefully examine concrete surfaces, and repair any irregularities in surfaces and finishes as specified in Section 03300.

B. Form ties: Remove form ties from surfaces. Fill tie holes as follows:
1. Remove form ties from surfaces.
2. Roughen cone shaped tie holes by heavy sandblasting before repair.
3. Dry pack cone shaped tie holes with dry-pack mortar as specified in Section 03600.
4. Taper ties:
a. After forms and taper ties are removed from wall, plug tie holes with neoprene plug as follows:
1) Heavy sandblast and then clean tie holes.
2) After cleaning, drive neoprene plug into each of taper tie holes with steel rod. Final location of neoprene plug shall be in center third of wall thickness. Bond neoprene plug to concrete with epoxy.
3) Locate steel rod in cylindrical recess and against middle of plug during driving.
a) At no time are plugs to be driven on flat area outside cylindrical recess.
b. Dry-pack of taper tie holes:
1) After installing plugs in tie holes, coat tie hole surface with epoxy bonding agent and fill with dry-pack mortar as specified in Section 03600.
a) Place dry-pack mortar in holes in layers with thickness not exceeding tie hole diameter and heavily compact each layer.
b) Dry-pack the outside of the hole no sooner than 7 days after the inside of the hole has been dry packed.
c) Wall surfaces in area of dry-packed tie holes: On the water side of water containing structures and the outside of below grade walls:
(1) Cover with minimum of 10 mils of epoxy gel.
(2) Provide epoxy gel coating on wall surfaces that extend minimum of 2 inches past dry-pack mortar filled tie holes.
(3) Provide finish surfaces that are free from sand streaks or other voids.

3.05 TOLERANCES:

A. Finished concrete shall conform to shapes, lines, grades, and dimensions indicated on the Drawings.

B. Construct work within the tolerances in accordance with ACI 117, except as modified in the following paragraphs or as indicated on the Drawings.
   1. General:
      a. At certain locations in the Work, tolerances required for equipment placement and operation may be more restrictive than the general tolerance requirements of this Section.
      b. Confirm equipment manufacturers' required tolerances for location and operation of equipment that will be installed, and construct concrete to satisfy those requirements.
   2. Slabs:
      a. Slope: Uniformly sloped to drain when slope is indicated on the Drawings.
      b. Slabs indicated to be level: Have maximum vertical deviation of 1/8-inch in 10-foot horizontal length without any apparent changes in grade.
   3. Circular tank walls:
      a. The Contractor may deviate from finish line indicated on the Drawings by use of forms with chord lengths not to exceed 2 feet.
   4. Inserts and embedments:
      a. Set inserts and embedments to tolerances required for proper installation and operation of equipment or systems to which insert pertains.
      b. Maximum tolerances: As follows:

Item	Tolerance
Sleeves and inserts	Plus 1/8 Minus 1/8 inches.
Anchor bolts:	
Projected ends	Plus 1/4 Minus 0.0 inches.
Axial alignment	Not more than 2 degrees off the axis indicated on the Drawings.
Setting location	Plus 1/16 Minus 1/16 inches.

C. Remove and replace work that does not conform to required tolerances. Procedures and products employed in and resulting from such re-work shall be acceptable to the Engineer.

END OF SECTION

SECTION 03150

CONCRETE ACCESSORIES

PART 1 GENERAL

1.01 SUMMARY

A. Section includes:
   1. Waterstops.
   2. Joint fillers.
   3. Concrete void fillers (geofoam).

B. Use this Section for the following:
   1. Concrete for water-containing structures, including the following areas:
      a. Filtered Pipe Gallery.
      b. Filter Effluent Channel.
      c. Overflow Structure.
      d. Clearwell Approach Channel.
      e. Clearwell.
   2. Concrete for Sodium Bisulfite Facility.
   3. Concrete for Emergency Generator Facility.

C. Related sections:
   1. The Contract Drawings are complementary; what is called for by one is as binding as if called for by all.
   2. It is the Contractor's responsibility for scheduling and coordinating the Work of subcontractors, suppliers, and other individuals or entities performing or furnishing any of the Contractor's Work.
   3. The following Sections are related to the Work described in this Section. This list of Related Sections is provided for convenience only and is not intended to excuse or otherwise diminish the duty of the Contractor to see that the completed Work complies accurately with the Contract Documents.
      a. Section 03154 – Hydrophilic Rubber Waterstop.
      b. Section 03155 – Thermoplastic Elastomeric Rubber Waterstops.

1.02 REFERENCES

A. ASTM International (ASTM):
   1. D 570 – Standard Test Method for Water Absorption of Plastics.
   2. D 624 – Standard Test Method for Tear Strength of Conventional Vulcanized Rubber and Thermoplastic Elastomers.
   3. D 638 – Standard Test Method for Tensile Properties of Plastics.
   4. D 746 – Standard Test Method for Brittleness Temperature of Plastics and Elastomers by Impact.
   5. D 747 – Standard Test Method for Apparent Bending Modulus of Plastics by Means of a Cantilever Beam.

6. D 792 – Standard Test Methods for Density and Specific Gravity (Relative Density) of Plastics by Displacement.
7. D 1751 – Standard Specification for Preformed Expansion Joint Filler for Concrete Paving and Structural Construction (Nonextruding and Resilient Bituminous Types).
8. D 1752 – Standard Specification for Preformed Sponge Rubber Cork and Recycled PVC Expansion Joint Fillers for Concrete Paving and Structural Construction.
9. D 2240 – Standard Test Method for Rubber Property – Durometer Hardness.
10. D 6817 - Standard Specification for Rigid Cellular Polystyrene Geofoam.

B. U. S. Army Corps of Engineers (USACE):
1. CRD-C-572, Specification for Polyvinyl Chloride Waterstop.

1.03 SUBMITTALS

A. Product data:
1. Polyvinyl chloride waterstops: Complete physical characteristics.
2. Preformed expansion joint material: Sufficient information on each type of material for review to determine conformance of material to requirements specified.
3. Concrete void fillers:
   a. Technical data demonstrating compliance with ASTM D 6817 for type specified.
   b. Adhesives.

B. Samples:
1. Polyvinyl chloride waterstop.

C. Laboratory test reports: Indicating that average properties of polyvinyl chloride waterstops material and finish conform to requirements specified in this Section.

D. Quality control submittals:
1. Certificates of Compliance:
   a. Written certificates that polyvinyl chloride waterstops supplied on this Project meet or exceed physical property in accordance with USACE CRD-C-572 and the requirements of this Section.
2. Manufacturer's instructions: For materials specified in this Section that are specified to be installed with such instructions.

1.04 QUALITY ASSURANCE

A. Mock-ups:
1. Welding demonstration:
   a. Demonstrate ability to weld acceptable joints in polyvinyl chloride waterstops before installing waterstop in forms.

B. Field joints:
1. Polyvinyl chloride waterstops field joints: Free of misalignment, bubbles, inadequate bond, porosity, cracks, offsets, and other defects which would

reduce the potential resistance of material to water pressure at any point. Replace defective joints. Remove faulty material from site and disposed of by Contractor at its own expense.

C. Inspections:
   1. Quality of welded joints will be subject to acceptance of Engineer.
   2. Polyvinyl chloride waterstop: Following defects represent partial list that will be grounds for rejection:
      a. Offsets at joints greater than 1/16 inch or 15 percent of the material thickness, at any point, whichever is less.
      b. Exterior crack at joint due to incomplete bond, which is deeper than 1/16 inch or 15 percent of material thickness, at any point, whichever is less.
      c. Any combination of offset or crack that will result in net reduction in cross section of waterstop in excess of 1/16 inch or 15 percent of material thickness, at any point, whichever is less.
      d. Misalignment of joint that will result in misalignment of waterstop in excess of 1/2 inch in 10 feet.
      e. Porosity in welded joint as evidenced by visual inspection.
      f. Bubbles or inadequate bonding.

1.05 DELIVERY, STORAGE, AND HANDLING

A. Deliver geofoam labeled in accordance with ASTM D 6817 material type.

B. Store protected from moisture and sunlight prior to installation.

C. Geofoam should be considered combustible and should not be exposed to open flame or other ignition sources.

D. Product should not be exposed to organic solvents, petroleum products and their vapors. Examples include but are not limited to are acetone, paint thinner, and gasoline.

E. Provide temporary ballast or other restraint prior to and during installation.

PART 2 PRODUCTS

2.01 JOINT FILLERS

A. General:
   1. Use specific type in applications as indicated on the Drawings.
   2. Do not use scrap or recycled materials to manufacture joint fillers.

B. Preformed expansion joint materials:
   1. Bituminous fiber expansion joint material:
      a. Properties:
         1) Thickness: To match joint width indicated on the Drawings.
         2) Asphalt-impregnated fiber in accordance with ASTM D 1751.

b. Manufacturers: One of the following or equal:
   1) Durajoint.
   2) W.R. Meadows, SealTight Fibre Expansion Joint.
2. Synthetic sponge rubber expansion joint material:
   a. Properties:
      1) Thickness: As recommended for width indicated on the Drawings.
      2) Material in accordance with ASTM D 1752, Type I.
   b. Manufacturers: One of the following or equal:
      1) Durajoint.
      2) W.R. Meadows, SealTight Sponge Rubber.

2.02 WATERSTOPS

A. Waterstops – polyvinyl chloride (PVC):
   1. Manufactured from prime virgin polyvinyl chloride plastic compound containing the plasticizers, resins, stabilizers, and other materials necessary to meet the requirements as specified in this Section.
   2. Manufacturers: One of the following or equal:
      a. Vinylex Corporation.
      b. Greenstreak Plastic Products Company, Inc.
   3. Type: Ribbed waterstop:
      a. Construction joints: 6-inch wide ribbed type.
      b. Expansion joint for wall penetrations for concrete encased electrical duct banks: 6-inch ribbed type with hollow center bulb.
      c. Expansion joints: 9-inch wide ribbed type with hollow center bulb.
      d. Dumbbell-type waterstop will not be allowed unless otherwise specified or indicated on the Drawings.
      e. No scrap or reclaimed material shall be used.
   4. Properties as indicated in the following table:

Physical Characteristics	Test Method	Required Results
Specific Gravity	ASTM D 792	Not less than 1.3.
Hardness	ASTM D 2240	70 to 90 Type A15 Shore durometer.
Tensile Strength	ASTM D 638	Not less than 2,000 pounds per square inch.
Ultimate Elongation	ASTM D 638	Not less than 300 percent.
Alkali Extraction	CRD-C-572	Change in weight after 7 days: Between minus 0.1 percent and plus 0.25 percent. Change in hardness after 7 days: Not more than plus 5 points.
Low Temperature Brittle Point	ASTM D 746	No sign of cracking or chipping at -35 degrees Fahrenheit.
Water Absorption	ASTM D 570	Not more than 0.15 percent after 24 hours.

Physical Characteristics	Test Method	Required Results
Accelerated Extraction Test	CRD-C-572	Tensile strength: Not less than 1,600 pounds per square inch. Elongation: Not less than 280 percent.
Stiffness in Flexure	ASTM D 747	Not less than 600 pounds per square inch.
Tear Resistance	ASTM D 624	Not less than 225 pounds per inch.
Thickness	–	3/8 inch.
Center Bulb		
6-inch Waterstops	–	7/8 inch or 1-inch nominal outside diameter.
9-inch Waterstops	–	For expansion joints 1 inch and narrower: 1-inch nominal outside diameter. For expansion joints wider than 1 inch: 2-inch nominal outside diameter.
Allowable Tolerances		
Width	–	Plus or minus 3/16 inch.
Thickness	–	Plus or minus 1/32 inch.

2.03 CONCRETE VOID FILLER

A. Manufacturers: The following or equal:
   a. EPS Geofoam Fill, Insulfoam LLC, Puyallup, WA.
   b. ACH Foam Technologies, LLC, Murray, UT.

B. Materials
   1. Rigid cellular polystyrene geofoam in compliance with ASTM D 6817.
      a. Type: EPS39.
      b. Density: Minimum 2.4 pounds per cubic foot.
      c. Compressive resistance at 1 percent deformation: Minimum of 15.0 pounds per square inch.
      d. Flexural Strength: Minimum 60 pounds per square inch.
      e. Thickness: As indicated on the drawings.
      f. Flame spread: Less than 25 when tested per ASTM E 84.
   2. Adhesive: As recommended by the manufacturer for attachment of the void fillers against existing concrete.
      a. Adhesive shall be sufficient to keep the void filler panels held securely in place during the casting of concrete.

PART 3 EXECUTION

3.01 INSTALLATION

A. Waterstops:
1. General:
   a. Store waterstops so as to permit free circulation of air around waterstop material and prevent direct exposure to sunlight.
   b. Install waterstops in concrete joints where indicated on the Drawings.
   c. Carry waterstops in walls into lower slabs and join to waterstops in slabs with appropriate types of fittings.
   d. In waterbearing structures: Provide all joints with waterstops, whether indicated on the Drawings or not.
   e. Provide waterstops that are continuous.
   f. Set waterstops accurately to position and line as indicated on the Drawings.
   g. Hold and securely fix edges in position at intervals of not more than 24 inches so that they do not move during placing of concrete.
   h. Position the waterstop so that symmetrical halves of waterstop are equally divided between concrete pours. Center axis of waterstop shall be coincident with centerline of the joint.
   i. Do not drive nails, screws, or other fasteners through waterstops in vicinity of construction joints.
   j. Use wires at not more than 24 inches on centers near outer edge of waterstop to tie waterstops into position.
   k. Special clips may be used in lieu of wires, at Contractor's option.
   l. Terminate waterstops 3 inches from top of finish surfaces of walls and slabs unless otherwise specified or indicated on the Drawings.
   m. When any waterstop is installed in concrete on one side of joint, while the other half or portion of the waterstop remains exposed to the atmosphere for more than 2 days, take suitable precautions to shade and protect exposed waterstop from direct rays of sunlight during entire exposure and until exposed portion is embedded in concrete.
   n. When placing concrete at waterstops in slabs, lift edge of waterstop while placing concrete below the waterstop. Manually force waterstop against and into concrete, and then cover waterstop with fresh concrete.
2. Polyvinyl chloride waterstop:
   a. Install waterstops so that joints are watertight.
   b. Weld joints such as unions, crosses, ells, and tees, with thermostatically controlled equipment recommended by waterstop manufacturer:
      1) Do not damage material by heat sealing.
      2) Make joints by overlapping, then simultaneously cut ends of sections to be spliced so they will form smooth even joint. Heat cut ends with splicing tool until the plastic melts. Press 2 ends together until plastic cools.
      3) Maintain continuity of waterstop ribs and tubular center axis.
      4) The splices shall have tensile strength of not less than 60 percent of unspliced materials tensile strength.
   c. Butt joints of ends of 2 identical waterstop sections may be made while material is in forms.

d. Prefabricate waterstop joints involving more than 2 butt ends to be joined together, including all joints that involve an angle cut, alignment change, or joining of 2 dissimilar waterstop sections, prior to placement in form.
   1) Provide not less than 24-inch long strips of waterstop material beyond joint.
   2) After inspection and acceptance, install such prefabricated waterstop joint assemblies in forms and butt-weld ends of 24-inch strips to straight run portions of waterstop in place in forms.
e. Manufacturer shall factory prefabricate joints for crosses and tees.
f. Split-type waterstops will not be permitted except where specifically indicated on the Drawings.

B. Joints:
   1. Construct construction and expansion joints as indicated on the Drawings.
   2. Preformed expansion joint material: Fasten expansion joint strips to concrete, masonry, or forms with adhesive. No nailing will be permitted, nor shall expansion joint strips be placed without fastening.

C. Concrete Void Forms:
   1. Preparation
      a. Clean substrate of loose material, dust, and other debris that might inhibit the adhering of the void filler material against existing concrete surfaces.
   2. Installation
      a. Install geofoam in accordance with manufacturer's recommendations.
      b. Cut and fit as necessary to accommodate dimensions.
      c. Begin installation of geofoam at one corner. Tightly butt joints to form uninterrupted surface.
      d. During placement of any concrete slabs over the top surface of the geofoam, fill it is permissible to use rebar supports to support the reinforcing steel during concrete placement, provided the rebar supports do not puncture the geofoam under any circumstances.
      e. Where geofoam will be subjected to uplift and/or lateral pressures due to concrete pours, the Contractor shall ensure:
         1) Geofoam is adequately sealed with a sealant recommended by the manufacturer to prevent intrusion of water and concrete into areas filled with geofoam.
         2) Geofoam is adequately secured to prevent uplift or movement of the geofoam during concrete pouring.
      f. Geofoam shall not be used as a substitute for formwork when placing concrete walls unless accepted by the Engineer.
         1) If allowed, the Contractor shall follow manufacturer's recommended guidelines, which may include additional requirements for formwork bracing, form ties, reinforcing steel bar supports, reinforcing steel bar spacers, and concrete pour sequencing.

END OF SECTION

SECTION 03154

HYDROPHILIC RUBBER WATERSTOP

PART 1 GENERAL

1.01 SUMMARY

A. Section includes: Hydrophilic rubber waterstop.

B. Use this Section for the following:
1. Concrete for water-containing structures, including the following areas:
   a. Filtered Pipe Gallery.
   b. Filter Effluent Channel.
   c. Overflow Structure.
   d. Clearwell Approach Channel.
   e. Clearwell.
2. Concrete for Sodium Bisulfite Facility.
3. Concrete for Emergency Generator Facility.

1.02 REFERENCES

A. NSF International (NSF):
1. 61 - Drinking Water System Components - Health Effects.

1.03 SUBMITTALS

A. General:
1. Submit the following items for each type, style and size of hydrophilic waterstop to be installed.
2. Product data:
   a. Manufacturer’s product data sheets.
      1) Include complete physical dimensions, expansion characteristics, and laboratory test reports indicating that average material properties conform to the requirements specified.
      2) Provide data sheets for all materials to be included in the waterstop system.
3. Samples:
   a. Minimum 6-inch long samples of each type of waterstop to be used if requested by the Engineer.
4. Manufacturer's installation instructions:
   a. Installation instructions and recommended installation details for the complete waterstop system, and for each component used in that system.

PART 2 PRODUCTS

2.01 HYDROPHILIC RUBBER WATERSTOP

A. General:
1. System composed of flexible hydrophilic urethane polymer with preformed strips, adhesives, paste, fasteners, and other accessories required for a complete and watertight installation.
   a. To ensure compatibility of materials, a single manufacturer shall provide all products and accessories for the hydrophilic waterstop system.
   b. Products incorporating bentonite are not acceptable under this Section.
   c. Provide waterstop and accessories resistant to degradation under cyclic wetting and drying and to chemicals typically found in water treatment structures.

B. Hydrophilic strip waterstop:
1. Pre-formed strips of flexible hydrophilic rubber designed to undergo controlled expansion when exposed to moisture.
2. Strip waterstops reinforced with embedded stainless steel wire mesh designed to direct expansion in the thickness direction of the strip, and to limit expansion in the longitudinal and width directions.
3. Provide normal or low-expansion pressure as scheduled and as indicated on the Drawings.
4. Listed under NSF 61 for use in contact with potable water.
5. In accordance with the following performance requirements:

Property	Test Method	Required Result
Hardness Hs	ASTM D 2240	Not less than 30 ± 6 Shore A Durometer Type A.*
Tensile Strength	ASTM D 412	Not less than 142 pounds per square inch*
Elongation	ASTM D 412	Not less than 500 percent*
Specific Gravity	ASTM D 792	1.18 ± 0.15
Expansion Coefficient by Volume	(manufacturer)	Not less than 1.9
Water Absorption	ASTM D 570	Not more than 0.15 percent after 24 hours
* Based on pressed sheet of compound.		

6. Manufacturers: One of the following or equal:
   a. Hydrophilic strip: Adeka Ultra Seal USA: MC-2010MN.
   b. Low expansion hydrophilic strip: Adeka Ultra Seal USA: KBA-1510FP.

C. Hydrophilic paste waterstop.
1. Single-component gun grade paste of hydrophilic rubber designed to undergo controlled expansion when exposed to moisture after initial curing.
2. Manufacturers: One of the following, or equal.

a. Adeka Ultra Seal USA: P-201.

PART 3 EXECUTION

3.01 INSTALLATION

A. Install products in accordance with manufacturer's instructions and recommended details.

B. Prepare concrete joint surfaces:
   1. Use wire brushing or scraping to expose an uncontaminated, solid surface.
   2. Clean prepared surface with high-pressure air or water to remove residue and debris.
   3. Confirm that prepared surfaces conform to manufacturer’s recommendations for surface profile and moisture conditions before installing materials.

C. Provide manufacturer’s recommended lap, splice, and corner details for hydrophilic waterstops.
   1. Use hydrophilic paste at all corner joints and overlap splices of hydrophilic strips.

D. Hydrophilic strip waterstop.
   1. Install primers and adhesives when recommended by the manufacturer before setting hydrophilic strips.
   2. Keep hydrophilic strip taut during the fastening process.
   3. Secure hydrophilic strip in place with concrete nails, screws, or adhesive.
   4. Provide installation with no gap between the hydrophilic strip and the concrete to which it is attached. At rough or irregular surfaces, set hydrophilic strip waterstop strip in a bead of hydrophilic paste.
      a. Fill all voids and rough areas under the hydrophilic strip with hydrophilic paste.
      b. Allow hydrophilic paste to cure in accordance with manufacturer’s recommendations before encapsulating paste in fresh concrete.

3.02 SCHEDULE

A. At the following joint locations/conditions, use the hydrophilic strip waterstop configuration noted.

B. Concrete construction joints:
   1. Under all of the following conditions, use hydrophilic strip waterstop set in a bed of hydrophilic paste waterstop, and screw strip waterstop to concrete surface:
      a. Slab or wall thickness is greater than 10 inches.
      b. Waterstop is placed between 2 rows of steel reinforcement.
      c. Concrete cover from waterstop to nearest concrete face is at least 4 inches.

2. Under any one of the following conditions, use low-expansion hydrophilic strip waterstop set in bed of hydrophilic paste waterstop and screw strip to concrete surface:
   a. Waterstop is placed on 1 side of a single row of steel reinforcement, or
   b. Concrete cover from waterstop to nearest concrete face is less than 4 inches.

C. Pipe penetrations through concrete:
   1. Pipe diameter less than 4 inches: Not allowed.
   2. Pipe diameter of 4 to 24 inches: Continuous bead of hydrophilic paste waterstop, minimum 1/4 inch high by 1/2 inch wide, encircling pipe.
   3. Pipe diameter greater than 24 inches: Continuous hydrophilic strip waterstop around perimeter of pipe, with hydrophilic paste seal at lapped ends of strip.

END OF SECTION

SECTION 03200

CONCRETE REINFORCING

PART 1 GENERAL

1.01 SUMMARY

A. Section includes:
   1. Bar supports.
   2. Reinforcing bars.
   3. Tie wires.

B. Use this Section for the following:
   1. Concrete for water-containing structures, including the following areas:
      a. Filtered Pipe Gallery.
      b. Filter Effluent Channel.
      c. Overflow Structure.
      d. Clearwell Approach Channel.
      e. Clearwell.
   2. Concrete for Sodium Bisulfite Facility.
   3. Concrete for Emergency Generator Facility.

1.02 REFERENCES

A. American Concrete Institute (ACI):
   1. 318 – Building Code Requirements for Structural Concrete and Commentary.
   2. 350 – Code Requirements for Environmental Engineering Concrete Structures and Commentary.
   3. SP-66 – ACI Detailing Manual.

B. American Welding Society (AWS):
   1. D1.4 – Structural Welding Code – Reinforcing Steel.

C. ASTM International (ASTM):
   1. A 185 – Standard Specification for Steel Welded Wire Reinforcement, Plain, for Concrete.
   2. A 615 – Standard Specification for Deformed and Plain Carbon Steel Bars for Concrete Reinforcement.
   3. A 706 – Standard Specification for Low-Alloy Steel Deformed and Plain Bars for Concrete Reinforcement.

1.03 DEFINITIONS

A. Give away bars:
   1. Reinforcing bars that are not required by Contract Documents, but are installed by Contractor to support required reinforcing bars.

1.04 SYSTEM DESCRIPTION

A. Drawings contain general notes concerning amount of reinforcement and placing, details of reinforcing bars at wall corners and intersections, and details of extra reinforcing bars around openings in concrete.

1.05 SUBMITTALS

A. Shop drawings:
   1. Changes to reinforcement in contract drawing:
      a. Indicate in separate letter submitted with shop drawings any changes to requirements in Contract Document for reinforcement.
      b. Such changes will not be acceptable unless Engineer has accepted such changes in writing.
   2. Reinforcement shop drawings:
      a. Review of reinforcement shop drawings by Engineer will be limited to general compliance with Contract Documents.
      b. Submit reinforcement shop drawings for each specific structure in complete package. Partial submittals will be rejected.
      c. Reinforcement mill certificates.

B. Samples:
   1. Submit samples of bar support chairs proposed for use along with letter stating where each type of chair will be used.

C. Welding of reinforcing bars:
   1. Welding procedures specification.
   2. Procedures qualification record.
   3. Welder qualification Test record.

1.06 DELIVERY, STORAGE, AND HANDLING

A. Packing and shipping:
   1. Deliver bars bundled and tagged with identifying tags.

B. Acceptance at site:
   1. Reinforcing bars:
      a. Deliver reinforcing bars lacking grade identification marks accompanied by manufacturer's guarantee of grade.

1.07 SEQUENCING AND SCHEDULING

A. Bar supports:
   1. Do not place concrete until samples and product data for bar supports have been accepted by Engineer.

PART 2 PRODUCTS

2.01 MATERIALS

A. Bar supports:
   1. Wire bar supports located between reinforcing bars and face of concrete:
      a. Stainless steel. Type 304 stainless steel bar supports.
         1) Support reinforcing bars for concrete placed on ground using wire bar support chairs with Type 304 stainless steel plates for resting on ground that are welded to chairs.
   2. Wire bar supports located between mats of reinforcing bars:
      a. Steel bar supports.

B. Reinforcing bars:
   1. Reinforcing bars embedded in concrete:
      a. ASTM A 615 deformed reinforcing bars in accordance with.
   2. Reinforcing bars that are required to be welded shall meet the following requirements:
      a. Low-alloy, Grade 60, deformed reinforcing bars in accordance with ASTM A 706.

C. Tie wires:
   1. Annealed steel.

D. Welded wire reinforcement:
   1. In accordance with ASTM A 185.
   2. Provide welded wire reinforcement in flat sheet form.
   3. Welded wire reinforcement oil may be used in place of reinforcing bars if accepted by Engineer.
      a. Provide welded wire reinforcement having cross-sectional area per linear foot of not less than cross-sectional area per linear foot of reinforcing bars indicated on the Drawings.

2.02 FABRICATION

A. Shop assembly:
   1. Cut and bend reinforcing bars in accordance with ACI 318, ACI 350, and ACI SP-66.
   2. Bend reinforcing bars cold.
   3. Provide reinforcing bars free from defects and kinks and from bends not indicated on the Drawings.

PART 3 EXECUTION

3.01 EXAMINATION

A. Verification of conditions:

1. Reinforcing bars and welded wire reinforcement: Verify that reinforcement is new stock free from rust scale, loose mill scale, excessive rust, dirt, oil, and other coatings that will adversely affect bonding capacity when placed in work.

3.02 PREPARATION

A. Surface preparation:
   1. Reinforcing bars:
      a. Thin coating of red rust resulting from short exposure will not be considered objectionable.
      b. Thoroughly clean any reinforcing bars having rust scale, loose mill scale, or thick rust coat.
   2. Cleaning of reinforcement materials:
      a. Remove concrete or other deleterious coatings from dowels and other projecting reinforcing bars by wire brushing or sandblasting before reinforcing bars are embedded in subsequent concrete placement.

3.03 INSTALLATION

A. Reinforcing bars: General:
   1. Do not field blend reinforcing bars.
   2. Roll hoop bars to radius of structure.

B. Placing reinforcing bars:
   1. Accurately place reinforcing bars in accordance with tolerances in ACI 318 and ACI 350 adequately secure them in position.
   2. Lap length bars at lap splices as indicated on the Drawings or specified.
      a. Unless specifically otherwise indicated on the Drawings, install bars at lap splices in contact with each other and fasten together with tie wire.
      b. Where reinforcing bars are to be lap spliced at concrete joints, ensure that bars project from first concrete placement, length equal to or greater than minimum lap splice length indicated on the Drawings.
      c. Where lap splice lengths are not indicated on the Drawings, provide lap splice lengths in accordance with ACI 318 and ACI 350.
   3. Reinforcing bar supports:
      a. Do not use give away bars that have less cover than required by Contract Documents. Do not adjust location of reinforcement required by Contract Documents to provide cover to give away bars.
      b. Do not use brick, concrete masonry units, spalls, rocks, wood, or similar materials for supporting reinforcing bars.
      c. Provide sufficient number of bar supports to prevent sagging, and shifting, and to support loads during construction. In no case less bar support than quantities and at locations as indicated in ACI SP-66.
   4. If not indicated on the Drawings, provide protective concrete cover in accordance with ACI 350 and ACI SP-66.

C. Tying of reinforcing bars:
   1. Fasten reinforcing bars securely in place with wire ties.
   2. Tie reinforcing bars sufficiently often to prevent shifting.
   3. Provide at least 3 ties in each reinforcing bar length.

a. Does not apply to dowel lap splices or to reinforcing bars shorter than 4 feet, unless necessary for rigidity.

4. Tie slab reinforcing bars at every intersection around periphery of slab.
5. Tie wall reinforcing bars and slab bar intersections other than around periphery at not less than every fourth intersection, but not greater than following maximum spacings:

Bar Size	Slab Bar Spacing Inches	Wall Bar Spacing Inches
Bars Number 5 and Smaller	60	48
Bars Number 6 through Number 9	96	60
Bars Number 10 and Number 11	120	96

6. After tying wire ties, bend ends of wire ties in towards center of concrete section.
   a. Cover for wire ties shall be same as cover requirements for reinforcing bars.

D. Welded wire fabric:
1. Install necessary tie wires, spacing chairs, or supports to keep welded wire reinforcement in place while concrete is being placed.
2. Bend welded wire reinforcement as indicated on the Drawings or required to fit Work.
3. Unroll or otherwise straighten welded wire reinforcement to make flat sheet before placing in Work.
4. Lap splice welded wire fabric as indicated on the Drawings.
5. If lap splice length is not indicated on the Drawings, splice welded wire fabric in accordance with ACI 318 and ACI 350.

E. Welding reinforcing bars:
1. Weld reinforcing bars where indicated on the Drawings and where acceptable to Engineer.
2. Perform welding in accordance with AWS D1.4 and welding procedures accepted by Engineer.
   a. Conform to requirements for minimum preheat and interpass temperatures.
3. Submit:
   a. Welding procedures specification.
   b. Procedures qualification record.
   c. Welder qualification test record.
4. Do not tack weld reinforcing bars except where indicated on the Drawings.

3.04 FIELD QUALITY CONTROL

A. Inspection of welding of reinforcing bars:
1. Reinforcing bar welding will be continuously inspected by inspection laboratory hired by Owner.

2. In addition to visual inspection, Owner may inspect reinforcing bar welds by other methods including radiographic inspection.

END OF SECTION

SECTION 03300

CAST-IN-PLACE CONCRETE

PART 1 GENERAL

1.01 SUMMARY

A. Section includes: Cast-in-place concrete.

B. Use this Section for the following:
   1. Concrete for water-containing structures, including the following areas:
      a. Filtered Pipe Gallery.
      b. Filter Effluent Channel.
      c. Overflow Structure.
      d. Clearwell Approach Channel.
      e. Clearwell.
   2. Concrete for Sodium Bisulfite Facility.
   3. Concrete for Emergency Generator Facility.

C. Related sections:
   1. The Contract Documents are complementary; what is called for by one is as binding as if called for by all.
   2. It is the Contractor's responsibility for scheduling and coordinating the Work of subcontractors, suppliers, and other individuals or entities performing or furnishing any of Contractor's Work.
   3. The following Sections are related to the Work described in this Section. This list of Related Sections is provided for convenience only and is not intended to excuse or otherwise diminish the duty of the Contractor to see that the completed Work complies accurately with the Contract Documents.
      a. Section 02467A - Drilled Concrete Piers.
      b. Section 03071 – Epoxies.
      c. Section 03150 – Concrete Accessories.
      d. Section 03366 – Tooled Concrete Finishing.
      e. Section 03600 – Grouting.
      f. Section 03931 – Epoxy Injection System.

1.02 REFERENCES

A. American Concrete Institute (ACI):
   1. 305 – Hot Weather Concreting Standard.
   2. 306 – Cold Weather Concreting Standard.
   3. 318 – Building Code Requirements for Structural Concrete and Commentary.
   4. 350 – Code Requirements for Environmental Engineering Concrete Structures and Commentary.
   5. Manual of Concrete Practice.

B. ASTM International (ASTM):

1. C 31 – Standard Practice for Making and Curing Concrete Test Specimens in the Field.
2. C 33 – Standard Specification for Concrete Aggregates.
3. C 39 – Standard Test Method for Compressive Strength of Cylindrical Concrete Specimens.
4. C 40 – Standard Test Method for Organic Impurities in Fine Aggregates for Concrete.
5. C 42 – Standard Test Method of Obtaining and Testing Drilled Cores and Sawed Beams of Concrete.
6. C 88 – Standard Test Method of Soundness of Aggregates by Use of Sodium Sulfate or Magnesium Sulfate.
7. C 94 – Standard Specification for Ready-Mixed Concrete.
8. C 114 – Standard Test Methods for Chemical Analysis of Hydraulic Cement.
9. C 117 – Standard Test Method for Materials Finer that 75-m (No. 200) Sieve in Mineral Aggregates by Washing.
10. C 123 – Standard Test Method for Lightweight Particles in Aggregate.
11. C 131 – Standard Test Method for Resistance to Degradation of Small-Size Coarse Aggregate by Abrasion and Impact in the Los Angeles Machine.
12. C 136 – Standard Test Method for Sieve Analysis of Fine and Coarse Aggregates.
13. C 142 – Standard Test Method for Clay Lumps and Friable Particles in Aggregate.
14. C 143 – Standard Test Method for Slump of Hydraulic-Cement Concrete.
15. C 150 – Standard Specification for Portland Cement.
16. C 156 – Standard Test Method for Water Loss Through Liquid Membrane-Forming Curing Compounds for Concrete.
17. C 157 – Standard Test Method for Length Change of Hardened Hydraulic-Cement Mortar and Concrete.
18. C 171 – Standard Specifications for Sheet Materials for Curing Concrete.
19. C 172 – Standard Practice for Sampling Freshly Mixed Concrete.
20. C 173 – Standard Test Method for Air Content of Freshly Mixed Concrete by the Volumetric Method.
21. C 260 – Standard Specification for Air-Entraining Admixtures for Concrete.
22. C 289 – Standard Test Method for Potential Alkali-Silica Reactivity of Aggregates (Chemical Method).
23. C 295 – Standard Guide to Petrographic Examination of Aggregates for Concrete.
24. C 309 – Standard Specification for Liquid Membrane-Forming Compounds for Curing Concrete.
25. C 311 – Standard Test Methods for Sampling and Testing Fly Ash or Natural Pozzolans for Use in Portland-Cement Concrete.
26. C 494 – Standard Specification for Chemical Admixtures for Concrete.
27. C 595 – Standard Specification for Blended Hydraulic Cements.
28. C 618 – Standard Specification for Coal Fly Ash and Raw or Calcined Natural Pozzolan for Use in Concrete.
29. C 856 – Standard Practice for Petrographic Examination of Hardened Concrete.
30. C 1017 - Specification for Chemical Admixtures for use in Producing Flowing Concrete.
31. D 75 – Standard Practice for Sampling Aggregates.

32. D 2103 – Standard Specification for Polyethylene Film and Sheeting.

C. NSF International (NSF):
1. 61 – Drinking Water System Components – Health Effects.

1.03 DEFINITIONS

A. Alkali: Sum of sodium oxide and potassium oxide calculated as sodium oxide.

B. Cementitious materials: Portland cement and fly ash.

C. Cold weather: A period when for more than 3 consecutive days, the average daily outdoor temperature drops below 40 degrees Fahrenheit. The average daily temperature is the average of the highest and lowest temperatures during the period from midnight to midnight. When temperatures above 50 degrees Fahrenheit occur during more than half of any 24-hour duration, the period shall no longer be regarded as cold weather.

D. Cold weather concreting: Operations for placing, finishing, curing, and protection of concrete during cold weather.

E. Green concrete: Concrete with less than 100 percent of the specified strength.

F. Hairline crack: Crack with a crack width of less than 4 thousandths of an inch.

G. Hot weather: A period when project conditions such as low humidity, high temperature, solar radiation, and high winds, promote rapid drying of freshly placed concrete.

H. Hot weather concreting: Operations for placing, finishing, curing, and protection of concrete during hot weather.

1.04 SYSTEM DESCRIPTION

A. Performance requirements:
1. General:
   a. Except as otherwise specified, provide concrete composed of portland cement, fly ash, fine aggregate, coarse aggregate, admixtures and water so proportioned and mixed as to produce plastic, workable mixture in accordance with requirements as specified in this Section and suitable to specific conditions of placement.
   b. Proportion materials in a manner that will secure lowest water-cementitious materials ratio that is consistent with good workability, plastic and cohesive mixture, and a mixture that is within specified slump range.
   c. Proportion fine and coarse aggregates in manner such as not to produce harshness in placing or honeycombing.
2. It is the intent of this Section to secure for every part of the Work concrete with homogeneous mixture, which when hardened will have required strength, watertightness, and durability:

a. It is recognized that some surface hairline cracks and crazing will develop in the concrete surfaces.
b. Construction and expansion joints have been specified and positioned in structures as indicated on the Drawings, and curing methods specified, for purpose of reducing number and size of cracks, due to normal expansion and contraction expected from specified concrete mixes.
c. Repair cracks which develop in walls or slabs and repair cracks which show any signs of leakage until all leakage is stopped.
d. Pressure inject visible cracks, other than hairline cracks and crazing, in following areas with epoxy as specified in Section 03931:
   1) Floors and walls of water bearing structures.
   2) Walls and overhead slabs of passageways or occupied spaces, outsides of which are exposed to weather or may be washed down and are not specified to receive separate waterproof membrane.
   3) Other items not specified to receive separate waterproof membrane: Slabs over water channels, wet wells, reservoirs, and other similar surfaces.
e. Walls or slabs, as specified above, that leak or sweat because of porosity or cracks too small for successful pressure injection with epoxy: Seal on water or weather side by coatings of surface sealant system, as specified in this Section.
f. Pressure injection and sealing: Continue as specified above until structure is watertight and remains watertight for not less than 1 year after final acceptance or date of final repair, whichever occurs later in time.

3. Workmanship and methods: Provide concrete work, including detailing of reinforcing, conforming with best standard practices and as set forth in ACI 318, ACI 350, Manual of Concrete Practices, and recommended practices.

1.05 SUBMITTALS

A. Cement mill tests: Include alkali content, representative of each shipment of cement for verification of compliance with specified requirements.

B. Cold weather concreting:
   1. Procedures for the production, transportation, placement, protection, curing, and temperature monitoring for concrete during cold weather.
   2. Procedures to be implemented upon abrupt changes in weather conditions or equipment failures.

C. Concrete mixes: Full details, including mix design calculations for concrete mixes proposed for use for each class of concrete:
   1. Include information on correction of batching for varying moisture contents of fine aggregate.
   2. Source quality test records with mix design submittal:
      a. Include calculations for required compressive strength (f'_{cr}) based on source quality test records.

D. Concrete aggregate tests: Certified copies in triplicate of commercial laboratory tests not more than 90 days old of all samples of concrete aggregates:

1. Coarse aggregate:
   a. Abrasion loss.
   b. Clay lumps and friable particles.
   c. Coal and lignite.
   d. Materials finer than 200 sieve.
   e. Reactivity.
   f. Shale and chert.
   g. Soundness.
2. Fine aggregate:
   a. Clay lumps.
   b. Color.
   c. Decantation.
   d. Reactivity.
   e. Shale and chert.
   f. Soundness.

E. Drying shrinkage test data.

F. Fine or coarse aggregate batched from more than 1 bin: Analyses for each bin, and composite analysis made up from these, using proportions of materials to be used in mix.

G. Fly ash Certificate of Compliance: Identify source of fly ash and certify compliance in accordance with ASTM C 618.

H. For conditions that promote rapid drying of freshly placed concrete such as low humidity, high temperature, and wind: Corrective measures for use prior to placing concrete.

I. Hot weather concreting: Procedures for production, placement, finishing, curing, protection, and temperature monitoring for concrete during hot weather and appropriate corrective measures.

J. Heating equipment for cold weather concreting: Information on type of equipment used for heating materials and new concrete in process of curing during excessively cold weather.

K. Information on mixing equipment.

L. Product data: Submit data completely describing products.

M. Sequence of concrete placing: Submit proposed sequence of placing concrete showing proposed beginning and ending of individual placements.

N. Sieve analysis: Submit sieve analyses of fine and coarse aggregates being used in triplicate at least every 3 weeks and at any time there is significant change in grading of materials.

O. Trial batch test data:
   1. Submit data for each test cylinder.

2. Submit data that identifies mix and slump for each test cylinder.

P. Weather monitoring: Records of:
1. Relative humidity.
2. Site ambient temperature.
3. Wind speed.

Q. Temperature of freshly placed concrete.

1.06 DELIVERY, STORAGE, AND HANDLING

A. Packing and shipping:
1. Deliver, store, and handle concrete materials in manner that prevents damage and inclusion of foreign substances.
2. Deliver and store packaged materials in original containers until ready for use.
3. Deliver aggregate to mixing site and handle in such manner that variations in moisture content will not interfere with steady production of concrete of specified degree of uniformity and slump.

B. Acceptance at site: Reject material containers or materials showing evidence of water or other damage.

1.07 PROJECT CONDITIONS

A. Environmental requirements:
1. Monitoring weather conditions:
   a. Install an outdoor weather station capable of measuring and recording ambient temperature, wind speed, and humidity. Furnish instruments accurate to within 2 degrees Fahrenheit, 5 percent relative humidity, and 1 mile per hour wind speed.
   b. Measure and record temperature of fresh concrete. Furnish and use sufficient number of maximum and minimum self-recording thermometers to adequately measure temperature of concrete.
   c. Monitor and keep records of the weather forecast starting at least 48 hours prior to placing concrete in order to allow enough time for taking appropriate measures pertaining to Hot or Cold weather concreting.
2. Hot weather concreting:
   a. Initiate evaporation control measures when concrete and air temperatures, relative humidity of the air, and the wind velocity have the capacity to evaporate water from a free surface at a rate that is equal to or greater than 0.2 pounds per square feet per hour. Determine evaporation rate using the Menzel Formula and monograph in ACI 305 3.1.3.
   b. When ambient air temperature is above 85 degrees Fahrenheit: Prior to placing concrete, cool forms and reinforcing steel by water cooling to below 90 degrees Fahrenheit.
   c. Monitor weather conditions at the site including air temperature, humidity, and wind speed, to assess the need for evaporation control measures begin monitoring site conditions no later than 1 hour before the start of concrete placement. Continue to monitor site conditions at intervals of 30 minutes until concrete curing has begun.

d. Temperature of concrete mix at time of placement: Keep temperature below 90 degrees Fahrenheit by methods which do not impair quality of concrete.
e. For conditions that promote rapid drying of freshly placed concrete such as low humidity, high temperature, and wind: Take corrective measures to minimize rapid water loss from concrete:
f. Furnish and use sufficient number of maximum and minimum self-recording thermometers to adequately measure temperature around concrete.

3. Cold weather concreting:
   a. Concrete placed below ambient air temperature of 45 degrees Fahrenheit and falling or below 40 degrees Fahrenheit:
      1) Make provision for heating water.
   b. Follow recommendations of ACI 306 for preparation, placement, and protection of concrete during cold weather.
   c. If materials have been exposed to freezing temperatures to degree that any material is below 35 degrees Fahrenheit: Heat such materials.
   d. Heating water, cement, or aggregate materials:
      1) Do not heat in excess of 160 degrees Fahrenheit.
   e. Protection of concrete in forms:
      1) Do not remove forms from concrete when outside ambient air temperature is below 50 degrees Fahrenheit until concrete has attained its minimum specified compressive strength. Evidence of strength shall be based on by testing of cylinders stored in the field under equivalent conditions to those at the concrete structure.
      2) Protect by means of covering with tarpaulins, or other acceptable covering acceptable to Engineer.
      3) Provide means for circulating warm moist air around forms in manner to maintain temperature of 50 degrees Fahrenheit for at least 5 days.

1.08 SEQUENCING AND SCHEDULING

A. Schedule placing of concrete in such manner as to complete any single placing operation to construction or expansion joint.

PART 2 PRODUCTS

2.01 MATERIALS

A. Admixtures:
   1. General:
      a. Do not use admixtures of any type, except as specified, unless written acceptance has been obtained from the Engineer.
      b. Admixtures shall be compatible with concrete and other admixtures. Admixtures other than pozzolans shall be the products of a single manufacture to ensure compatibility.
      c. Do not use admixtures containing chlorides calculated as chloride ion in excess of 0.5 percent by weight of cement.

d. Use in accordance with manufacturer's recommendations. Add each admixture to concrete mix separately.
e. Admixtures for concrete installed at locations in direct contact with potable water or process water in treatment: Listed as acceptable under NSF 61 based on testing by a recognized national laboratory acceptable to the Engineer.

2. Air entraining admixture:
   a. Provide concrete with 5 percent, within 1 percent, entrained air of evenly dispersed air bubbles at time of placement.
   b. In accordance with ASTM C 260.
3. Water reducing admixture:
   a. May be used at the Contractor's option.
   b. In accordance with ASTM C 494, Type A or Type D.
   c. Not contain air-entraining agents.
   d. Liquid form before adding to the concrete mix.
   e. No decrease in cement is permitted as result of use of water reducing admixture.
4. High-range water reducing admixture ("Super-plasticizer")
   a. Conform to ASTM C 494, Type F or ASTM C 1017, Type I
   b. Use shall produce non-segregating plasticized concrete with little bleeding and the physical characteristics of low water/cement ratio concrete.
5. Synthetic reinforcing fibers: As specified in Section 03315.

B. Aggregate:
1. General:
   a. Provide concrete aggregates that are sound, uniformly graded, and free of deleterious material in excess of allowable amounts specified.
   b. Grade aggregate in accordance with ASTM C 136 and D 75.
   c. Provide unit weight of fine and coarse aggregate that produces in place concrete with weight of not less than 140 pounds per cubic foot.
   d. Do not use aggregate made from recycled materials such as crushed and screened hydraulic-cement concrete, brick, and other construction materials.
2. Fine aggregate:
   a. Provide fine aggregate for concrete or mortar consisting of clean, natural sand or of sand prepared from crushed stone or crushed gravel.
   b. Do not provide aggregate having deleterious substances in excess of following percentages by weight of contaminating substances.
      1) In no case shall total exceed percent listed.

Item	Test Method	Percent
Removed by decantation (dirt, silt, etc.)	ASTM C 117	3
Shale or Chert	ASTM C 123 ASTM C 295*	1 1
Clay Lumps	ASTM C 142	1
* Test Method C 123 is used to identify particles in the sample lighter than 2.40 Specific Gravity. Test Method C 295 is used to identify which of the lightweight particles are shale or chert. If the results of Test Method C 123 are less than 1 percent, Test Method C 295 is not required.		

c. Except as otherwise specified, grade fine aggregate from coarse to fine in accordance with ASTM C 33.
d. In accordance with NSF 61.

3. Coarse aggregate:
   a. Provide coarse aggregate consisting of gravel or crushed stone made up of clean, hard, durable particles free from calcareous coatings, organic matter, or other foreign substances.
   b. Not exceeding 15 percent by weight, of thin or elongated pieces having length greater than 5 times average thickness.
   c. In accordance with NSF 61.
   d. Deleterious substances: Not in excess of following percentages by weight, and in no case having total of all deleterious substances exceeding 2 percent.

Item	Test Method	Percent
Shale or chert	ASTM C 123 ASTM C 295**	1.25 1
Coal and lignite	ASTM C 123	1/4
Clay lumps and friable particles	ASTM C 142	1/4
Materials finer than Number 200 sieve	ASTM C 117	1/2*

* Except when material finer than Number 200 sieve consists of crusher dust, maximum amount shall be 1 percent.

** Test Method C 123 is used to identify particles in the sample lighter than 2.40 Specific Gravity. Test Method C 295 is used to identify which of the lightweight particles are shale, chert, coal, or lignite. If the results of Test Method C 123 are less than 1.25 percent (the minimum combined percentage of shale, chert, coal and lignite), Test Method C 295 is not required.

   e. Grading:
      1) Aggregate for Class A, B, C, and D concrete: In accordance with ASTM C 33, Size Number 57, except as otherwise specified or authorized in writing by the Engineer.
      2) Aggregate for Class CE concrete for encasement of electrical conduits:
         a) Graded in accordance with ASTM C 33, Size Number 8.

C. Concrete sealer:
   1. Manufacturers: One of the following or equal:
      a. Euclid Chemical Company: Diamond Hard.
      b. L&M Construction Chemicals: SealHard.

D. Conduit encasement coloring agent:
   1. Color: Red color concrete used for encasement of electrical ducts, conduits, and similar type items.

2. Manufacturers: One of the following or equal:
   a. Davis Company, #100 Utility Red.
   b. I. Reiss Company, Inc., equivalent product.
   c. Euclid Chemical Company, Increte Division, “Colorcrete Brick Red.”
3. Conduit encasement concrete: Mix into each cubic yard of concrete 10 pounds of coloring agent.

E. Evaporation retardant:
1. Manufacturers: One of the following or equal:
   a. BASF, Cleveland, Ohio, Confilm.
   b. Euclid Chemical Company, Cleveland, Ohio, Eucobar.

F. Fly ash:
1. Fly ash in accordance with ASTM C 618, Class F, may be used in concrete made with Type II portland cement.
2. Maximum of 15 percent by weight of fly ash to total weight of cementitious materials.
   a. The total weight of cementitious materials shall not be less than minimum cementitious materials listed in Table A.
3. Do not use in concrete made with portland-pozzolan cement.
4. Loss on ignition: Not exceed 4 percent.
5. In accordance with NSF 61.

G. Portland cement:
1. Conform to specifications and tests in accordance with ASTM C 150, Types II or III, low alkali, except as specified otherwise.
2. Have total alkali containing not more than 0.60 percent.
3. Exposed concrete in any individual structure: Use only one brand of portland cement.
4. Cement for finishes or repairs: Provide cement from same source and of same type as concrete to be finished or repaired.
5. In accordance with NSF 61.

H. Sheet membrane for curing:
1. Polyethylene film:
   a. In accordance with ASTM C 171.
   b. Color: White.
   c. Thickness: Nominal thickness of polyethylene film shall not be less than 0.0040 inches when measured in accordance with ASTM D 2103. Thickness of polyethylene film at any point shall not be less than 0.0030 inches.
   d. Loss of moisture: Not exceed 0.055 grams per square centimeter of surface when tested in accordance with ASTM C 156.

I. Water:
1. Water for concrete, washing aggregate, and curing concrete: Clean and free from oil and deleterious amounts of alkali, acid, organic matter, or other substances.
2. Chlorides and sulfate ions:

a. Water for conventional reinforced concrete: Use water containing not more than 1,000 milligrams per liter of chlorides calculated as chloride ion, nor more than 1,000 milligrams per liter of sulfates calculated as sulfate ion.
b. Water for prestressed or post-tensioned concrete: Use water containing not more than 650 milligrams per liter of chlorides calculated as chloride ion, or more than 800 milligrams per liter of sulfates calculated as sulfate ion.

2.02 EQUIPMENT

A. Mixing concrete:
1. Mixers may be of stationary plant, paver, or truck mixer type.
2. Provide adequate equipment and facilities for accurate measurement and control of materials and for readily changing proportions of material.
3. Mixing equipment:
   a. Capable of combining aggregates, cementitious materials, and water within specified time into thoroughly mixed and uniform mass and discharging mixture without segregation.
   b. Maintain concrete mixing plant and equipment in good working order and operated at loads, speeds, and timing recommended by manufacturer or as specified.
   c. Proportion cementitious materials and aggregate by weight.

B. Machine mixing:
1. Batch plant shall be capable of controlling delivery of all material to mixer within 1 percent by weight of individual material.
2. If bulk cementitious materials are used, weigh them on separate visible scale which will accurately register scale load at any stage of weighing operation from zero to full capacity.
3. Prevent cementitious materials from coming into contact with aggregate or with water until materials are in mixer ready for complete mixing with all mixing water.
4. Procedure of mixing cementitious materials with sand or with sand and coarse aggregate for delivery to project site, for final mixing and addition of mixing water will not be permitted.
5. Retempering of concrete will not be permitted.
6. Discharge entire batch before recharging.
7. Volume of mixed material per batch: Not exceed manufacturer's rated capacity of mixer.
8. Mixers:
   a. Perform mixing in batch mixers of acceptable type.
   b. Equip each mixer with device for accurately measuring and indicating quantity of water entering concrete, and operating mechanism such that leakage will not occur when valves are closed.
   c. Equip each mixer with device for automatically measuring, indicating, and controlling time required for mixing:
      1) Interlock device to prevent discharge of concrete from mixer before expiration of mixing period.

C. Transit-mixed concrete:
   1. Mix and deliver in accordance with ASTM C 94.
   2. Total elapsed time between addition of water at batch plant and discharging completed mix:
      a. Not to exceed 90 minutes.
      b. Elapsed time at project site shall not exceed 30 minutes.
   3. Under conditions contributing to quick setting, total elapsed time permitted may be reduced by the Engineer.
   4. Equip each truck mixer with device interlocked to prevent discharge of concrete from drum before required number of turns and furnish device that is capable of counting number of revolutions of drum.
   5. Continuously revolve drum after it is once started until it has completely discharged its batch:
      a. Do not add water until drum has started revolving.
      b. Right is reserved to increase required minimum number of revolutions or to decrease designated maximum number of revolutions allowed, if necessary, to obtain satisfactory mixing. The Contractor will not be entitled to additional compensation because of such increase or decrease.

D. Other types of mixers: In case of other types of mixers, mixing shall be as follows:
   1. Mix concrete until there is uniform distribution of materials, and discharge mixer completely before recharging.
   2. Neither speed nor volume loading of mixer shall exceed manufacturer's recommendations.
   3. Continue mixing for minimum of 1-1/2 minutes after all materials are in drum, and for batches larger than 1 cubic yard increase minimum mixing time 15 seconds for each additional cubic yard or fraction thereof.

2.03 MIXES

A. Measurements of materials:
   1. Measure materials by weighing, except as otherwise specified or where other methods are specifically authorized in writing by the Engineer.
   2. Furnish apparatus for weighing aggregates and cementitious materials that is suitably designed and constructed for this purpose.
   3. Accuracy of weighing devices: Furnish devices that have capability of providing successive quantities of individual material that can be measured to within 1 percent of desired amount of that material.
   4. Measuring or weighing devices: Subject to review by the Engineer. Shall bear valid seal of the Sealer of Weights and Measures having jurisdiction.
   5. Weighing cementitious materials:
      a. Weigh cementitious materials separately.
      b. Cement in unbroken standard packages (sacks): Need not be weighed.
      c. Weigh bulk cementitious materials and fractional packages.
   6. Measure mixing water by volume or by weight.

B. Concrete proportions and consistency:
   1. Provide concrete that can be worked readily into corners and angles of forms and around reinforcement without excessive vibration and without permitting materials to segregate or free water to collect on surface.

2. Prevent unnecessary or haphazard changes in consistency of concrete.
3. Ratio of coarse aggregate to fine aggregate: Not less than 1.0 or more than 2.0 for all concrete Classes, with exception of Class CE.
4. Aggregate:
   a. Obtain aggregate from source that is capable of providing uniform quality, moisture content, and grading during any single day's operation.
5. Maximum concrete mix water to cementitious materials ratio, minimum cementitious materials content, and slump range: Conform to values specified in Table A in this Section.
6. Concrete batch weights: Control and adjust to secure maximum yield. At all times, maintain proportions of concrete mix within specified limits.
7. Mix modification: If required, by the Engineer, modify mixture within limits set forth in this Section.

C. Concrete mixes:
1. Proportioning of concrete mix: Proportion mixes based on required compressive strength f'_{cr}.
2. Mixes:
   a. Adjusting of water: After acceptance, do not change mixes without acceptance by Engineer, except that at all times adjust batching of water to compensate for free moisture content of fine aggregate.
   b. Total water content of each concrete class: Not exceed those specified in Table A in this Section.
   c. Checking moisture content of fine aggregate: Furnish satisfactory means at batching plant for checking moisture content of fine aggregate.
3. Change in mixes: Submit new mix design and perform new trial batch and test program as specified in this Section.

D. Classes of concrete:
1. Provide concrete consisting of 5 classes: Classes A, B, C, D, and CE. Use where specified or indicated on the Drawings.
2. Weight of concrete classes: Provide classes of concrete having minimum weight of 140 pounds per cubic foot.
3. Class A1 concrete: Use Class A1 concrete for filter pipe gallery ballast/topping slab.
4. Class B concrete: Class B concrete may be substituted for Class A concrete, when high-early strength concrete is needed in areas specifically accepted by the Engineer and that do not require sulfate resistant concrete.
5. Class C concrete: Class C concrete may be used for fill for unauthorized excavation, for thrust blocks and ground anchors for piping, for bedding of pipe, and where indicated on the Drawings.
6. Class CE concrete: Use Class CE concrete for electrical conduit encasements.
7. Class P concrete: Use Class P concrete for drilled piers specified in Section 02467A.
8. All other concrete, unless specified or otherwise indicated on the Drawings: Use Class A concrete.

TABLE A
CONCRETE WITH AIR ENTRAINMENT

Class	Specified Compressive Strength f'_c at 28 Days (Pounds per Square Inch)	Water-to-Cementitious Materials Ratio	Cementitious Materials per Cubic Yard of Concrete by Weight (Pounds)	Slump Range (Inches)	Admixtures Required
A	4,000	0.40 to 0.45	535 to 658	2 to 4	WRA (SRF - NA)
A1	4,000	0.40 to 0.45	535 to 658	2 to 4	WRA SRF - Req (AEA - NA)
B	4,000	0.40 to 0.45	535 to 658	2 to 4	WRA (SRF - NA)
C	2,500	Maximum 0.62	Minimum 423	3 to 6	WRA
CE	2,500	Maximum 0.62	Minimum 423	3 to 6	WRA CE
P	4,000	0.40 - 0.45	535 to 658	7 to 9	WRA SP - Req (SRF - NA)

Notes:
(1) Admixtures: Products not specifically required or excluded may be used at Contractor's option.

AEA: Air-entraining admixture
CA: Coloring admixture
SP: Super-plasticizer
SRF: Synthetic reinforcing fibers
WRA: Water-reducing admixture

NA: Not allowed
Opt: Optional
Req: Required

9. Pumped concrete: Provide pumped concrete that complies with all requirements of this Section.
10. Do not place concrete with slump outside limits indicated in Table A.
11. Classes:
    a. Classes A, C, D, and CE concrete: Make with Type II low alkali portland cement.
    b. Class B concrete: Make with Type III low alkali portland cement.
    c. Admixtures: Provide admixtures as specified in this Section and designated in Table A..

E. Air entraining admixture:
1. Add agent to batch in portion of mixing water.

2. Batch solution by means of mechanical batcher capable of accurate measurement.

2.04 SOURCE QUALITY CONTROL

A. Tests:
1. Trial batches:
   a. After concrete mix designs have been accepted by Engineer, have trial batches of the accepted Class A, Class B, and Class D concrete mix designs prepared by testing laboratory acceptable to the Engineer.
   b. Prepare trial batches using cementitious materials and aggregates proposed to be used for the Work.
   c. Prepare trial batches with sufficient quantity to determine slump, workability, consistency, and finishing characteristics, and to provide sufficient test cylinders.
   d. Test cylinders: Provide cylinders having 6-inch diameter by 12-inch length and that are prepared in accordance with ASTM C 31 for tests specified in this Section.
   e. Determine slump in accordance with ASTM C 143.
   f. Test cylinders from trial batch:
      1) Test 8 cylinders for compressive strength in accordance with ASTM C 39:
         a) Test 4 cylinders at 7 days and 4 at 28 days.
         b) Establish ratio between 7 day and 28 day strength for mix. 7-day strength may be taken as satisfactory indication of 28-day strength provided effects on concrete of temperature and humidity between 7 day and 28 day are taken into account.
      2) Average compressive strength of 4 test cylinders tested at 28 days: Equal to or greater than required average compressive strength (f'_{cr}) on which concrete mix design is based.
   g. Drying shrinkage:
      1) Prepare 5 drying shrinkage specimens in accordance with ASTM C 157, except as modified in this Section.
      2) Remove drying shrinkage specimens from molds at age of 23 hours within 1 hour after trial batching, then immediately place them in water at 73 degrees Fahrenheit within 3 degrees for at least 30 minutes and then measure specimens within 30 minutes thereafter to determine original length.
         a) Then submerge specimens in saturated limewater at 73 degrees Fahrenheit within 3 degrees for moist curing.
      3) Make measurement to determine expansion expressed as percentage of original length at age 7 days.
         a) Use length at age 7 days as base length for drying shrinkage calculations.
      4) Immediately store specimens in humidity controlled room maintained at 73 degrees Fahrenheit within 3 degrees and 50 percent within 4 percent relative humidity for remainder of test.
      5) Make and report measurements to determine shrinkage expressed as percentage of base length separately for 7, 14, 21, and 28 days of drying after 7 days of moist curing.

6) Drying shrinkage deformation:
   a) Measure drying shrinkage deformation of each specimen as difference between base length and length after drying at each test age.
   b) Measure average drying shrinkage deformation of specimens to nearest 0.0001 inch at each test age.
   c) If drying shrinkage of any specimen departs from average of test age by more than 0.0004 inch, disregard results obtained from that specimen and test another specimen.
   d) Shrinkage of trial batch concrete at 28 days drying age shall not exceed 0.045 percent maximum.

h. Perform test batches and tests required to establish trial batches and acceptability of materials without change in Contract Price.

i. Do not place concrete until the concrete mix design and trial batch have been accepted by Engineer.

2. Required average compressive strength:
   a. Determine required average compressive strength (f'_{cr}) for selection of concrete proportions for mix design, for each class of concrete, using calculated standard deviation for its corresponding specified compressive strength (f'_c,) in accordance with ACI 318 and ACI 350.
   b. When test records of at least 30 consecutive tests that span period of not less than 45 calendar days are available, establish standard deviation as in accordance with ACI 318 and ACI 350 and as modified in this Section.
   c. Provide test records from which to calculate standard deviation that represent materials, quality control procedures, and conditions similar to materials, quality control procedures, and conditions expected to apply in preparation of concrete for the Work.
   d. Provide test records with materials and proportions that are more restricted than those for the Work.
   e. Specified compressive strength (f'_c) of concrete used in test records: Within 1,000 pounds per square inch of that specified for the Work.
   f. When lacking adequate test records for calculation of standard deviation meeting requirements, determine required average compressive strength f'_{cr} from following Table B.

TABLE B
REQUIRED AVERAGE COMPRESSION STRENGTH

Specified Compressive Strength f'_c (pounds per square inch)	**Required Average Compressive Strength f'_{cr} (pounds per square inch)**
Less than 3,000	f'_c + 1,000
3,000 to 5,000	f'_c + 1,200
Over 5,000	1.10f'_c + 700

3. Aggregate:
   a. Testing of concrete aggregate is at Contractor's expense.
   b. If there is change in aggregate source or if there is a significant change in aggregate quality or sieve analysis from same source, submit new set of

design mixes covering each class of concrete and prepare new trial batches before further placing of concrete.

c. Sieves: Use sieves with square openings for testing grading of aggregates.
d. Sample aggregate in accordance with ASTM C 136 and D 75.
e. Fine aggregate:
   1) Provide fine aggregate that does not contain strong alkali nor organic matter which gives color darker than standard color when tested in accordance with ASTM C 40.
   2) Provide aggregate having soundness in accordance with ASTM C 33 when tested in accordance with ASTM C 88.
   3) Provide aggregate complying with reactivity requirements in accordance with ASTM C 33 when tested in accordance with ASTM C 289.
f. Coarse aggregate:
   1) Soundness when tested in accordance with ASTM C 88: Have loss not greater than 10 percent when tested with sodium sulfate.
   2) Abrasion Loss: Not exceed 45 percent after 500 revolutions when tested in accordance with ASTM C 131.
   3) Reactivity: Not exceed limits specified in Appendix of ASTM C 33 when tested in accordance with ASTM C 289.
   4) Fly ash:
      a) Sampling and testing: Sample and test fly ash in accordance with ASTM C 311.
   5) Portland cement:
      a) Determination of alkali content: In accordance with ASTM C 114.

PART 3 EXECUTION

3.01 INSTALLATION

A. Liquid evaporation retardant:
   1. Under conditions that result in rapid evaporation of moisture from the surface of the concrete, immediately after the concrete has been screeded, coat the surface of the concrete with a liquid evaporation retardant.
   2. Apply the evaporation retardant again after each work operation as necessary to prevent drying shrinkage cracks.
   3. Conditions which result in rapid evaporation of moisture may include one or more of the following:
      a. Low humidity.
      b. Windy conditions.
      c. High temperature.

B. Joints and bonding:
   1. As far as practicable construct concrete work as monolith.
   2. Locations of construction, expansion, and other joints are indicated on the Drawings or as specified in this Section.
   3. Time between placement of adjacent concrete separated by joints:

a. Provide not less than 3 days (72 hours) between placement of adjacent sections for the following:
   1) Slabs.
   2) Walls.
b. Provide not less than 7 days (168 hours) between placement of upper and lower pours for the following:
   1) Walls over slabs.
   2) Slabs over walls.
   3) Slabs keyed into the sides of walls.

4. Construction joints:
   a. Where construction joints are not indicated on the Drawings, provide construction joints in slabs and walls at intervals not greater than 35 feet.
   b. In order to preserve strength and watertightness of structures, make no other joints, except as authorized the Engineer.
   c. At construction joints, thoroughly clean concrete of laitance, grease, oil, mud, dirt, curing compounds, mortar droppings, or other objectionable matter by means of heavy sandblasting.
   d. Cleaning of construction joints:
      1) Wash construction joints free of sawdust, chips, and other debris after forms are built and immediately before concrete or grout placement.
      2) Should formwork confine sawdust, chips, or other loose matter in such manner that it is impossible to remove them by flushing with water, use vacuum cleaner for their removal, after which flush cleaned surfaces with water.
      3) Provide cleanout hole at base of each wall and column for inspection and cleaning.
   e. At horizontal joints: As initial placement over cold joints, thoroughly spread bed of cement grout as specified in Section 03600(with a thickness of not less than 1/2 inch nor more than 1 inch.
5. Take special care to ensure that concrete is well consolidated around and against waterstops and waterstops are secured in proper position.
6. Construction and expansion joints:
   a. Constructed where and as indicated on the Drawings.
   b. Waterstops, expansion joint material, synthetic rubber sealing compound, and other similar materials: As specified in Sections 03150.
7. Repair of concrete: Where it is necessary to repair concrete by bonding mortar or new concrete to concrete which has reached its initial set, first coat surface of set concrete with epoxy bonding agent as specified in Section 03071.

C. Conveying and placing concrete:
   1. Convey concrete from mixer to place of final deposit by methods that prevent separation or loss of materials.
   2. Use equipment for chuting, pumping, and conveying concrete of such size and design as to ensure practically continuous flow of concrete at delivery end without segregation of materials.
   3. Design and use chutes and devices for conveying and depositing concrete that direct concrete vertically downward when discharged from chute or conveying device.

4. Keep equipment for conveying concrete thoroughly clean by washing and scraping upon completion of day's placement.

D. Placing concrete:
1. Place no concrete without prior authorization of the Engineer.
2. Do not place concrete until:
   a. Reinforcement is secure and properly fastened in its correct position and loose form ties at construction joints have been retightened.
   b. Dowels, bucks, sleeves, hangers, pipes, conduits, anchor bolts, and any other fixtures required to be embedded in concrete have been placed and adequately anchored.
   c. Forms have been cleaned and oiled as specified.
3. Do not place concrete in which initial set has occurred, or that has been retempered.
4. Do not place concrete during rainstorms or high velocity winds.
5. Protect concrete placed immediately before rain to prevent water from coming in contact with such concrete or winds causing excessive drying.
6. Keep sufficient protective covering on hand at all times for protection of concrete.
7. After acceptance, adhere to proposed sequence of placing concrete, except when specific changes are requested and accepted by the Engineer.
8. Notify the Engineer in writing of readiness, not just intention, to place concrete in any portion of the work:
   a. Provide this notification in such time in advance of operations, as the Engineer deems necessary to make final inspection of preparations at location of proposed concrete placing.
   b. Place forms, reinforcement, screeds, anchors, ties, and inserts in place before notification of readiness is given to the Engineer.
   c. Depositing concrete:
      1) Deposit concrete at or near its final position to avoid segregation caused by rehandling or flowing.
      2) Do not deposit concrete in large quantities in one place and work along forms with vibrator or by other methods.
      3) Do not drop concrete freely into place from height greater than 5 feet.
      4) Use tremies for placing concrete where drop is over 5 feet.
      5) Commence placement of concrete on slopes, starting at bottom of slope.
9. Place concrete in approximately horizontal layers not to exceed 24 inches in depth and bring up evenly in all parts of forms.
10. Continue concrete placement without avoidable interruption, in continuous operation, until end of placement is reached.
11. After concrete placement begins, continue concrete placement without significant interruption. Plan and implement precautions to prevent any delay, between layers being placed, from exceeding 20 minutes.
12. If concrete is to be placed over previously placed concrete and more than 20 minutes has elapsed, spread layer of cement grout not less than 1/2 inch in thickness nor more than 1 inch in thickness over surface before placing additional concrete.
13. Placement of concrete for slabs, beams, or walkways:

a. If cast monolithically with walls or columns, do not commence until concrete in walls or columns has been allowed to set and shrink.
b. Allow set time of not less than 1 hour for shrinkage.

E. Consolidating concrete:
1. Place concrete with aid of acceptable mechanical vibrators.
2. Thoroughly consolidate concrete around reinforcement, pipes, or other shapes built into the work.
3. Provide sufficiently intense vibration to cause concrete to flow and settle readily into place and to visibly affect concrete over radius of at least 18 inches.
4. Vibrators:
   a. Keep sufficient vibrators on hand at all times to vibrate concrete as placed.
   b. In addition to vibrators in actual use while concrete is being placed, have on hand minimum 1 spare vibrator in serviceable condition.
   c. Do not place concrete until it has been ascertained that all vibrating equipment, including spares, are in serviceable condition.
5. Take special care to place concrete solidly against forms to leave no voids.
6. Take every precaution to make concrete solid, compact, and smooth. If for any reason surfaces or interiors have voids or are in any way defective, repair such concrete in manner acceptable to the Engineer.

F. Footings and slabs on grade:
1. Do not place concrete on ground or compacted fill until subgrade is in moist condition acceptable to the Engineer.
2. If necessary, sprinkle subgrade with water not less than 6 or more than 20 hours in advance of placing concrete.
3. If subgrade becomes dry prior to concrete placement, sprinkle again, without forming pools of water.
4. Do not place concrete if subgrade is muddy or soft.

G. Loading concrete:
1. Green concrete:
   a. No heavy loading of green concrete will be permitted.
2. No backfill shall be placed against concrete walls, connecting slabs, or beams until the concrete has reached the specified strength.
3. Use construction methods, sequencing, and allow time for concrete to reach adequate strength to prevent overstress of the concrete structure during construction.

H. Curing concrete:
1. General:
   a. Cure concrete by methods specified in this Section.
   b. Keep concrete continuously moist and at a temperature of at least 50 degrees Fahrenheit for minimum of 7 days after placement.
   c. Cure concrete to be painted with water or sheet membrane.
   d. Do not use sprayed membrane curing or sealing compounds on concrete surfaces that are to receive paint or upon which any material is to be bonded.

e. Water cure concrete slabs that are specified to be sealed by concrete sealer.
f. Cure other concrete by water curing or sprayed membrane curing compound at the Contractor's option.
g. Floor slabs may be cured using sheet membrane curing.

2. Water curing:
   a. Keep surfaces of concrete being water cured constantly and visibly moist day and night for period of not less than 7 days.
   b. Each day forms remain in place count as 1 day of water curing.
   c. No further curing credit will be allowed for forms in place after contact has once been broken between concrete surface and forms.
   d. Do not loosen form ties during period when concrete is being cured by leaving forms in place.
   e. Flood top of walls with water at least 3 times per day, and keep concrete surfaces moist at all times during 7 day curing period.
3. Sheet membrane curing:
   a. Install sheet membrane as soon as concrete is finished and can be walked on without damage.
   b. Seal joints and edges with small sand berm.
   c. Keep concrete moist under sheet membrane.

3.02 CONCRETE FINISHING

A. Provide concrete finishes as specified in Section 03366.

B. Edges of joints:
   1. Provide joints having edges as indicated on the Drawings.
   2. Protect wall and slab surfaces at edges against concrete spatter and thoroughly clean upon completion of each placement.

3.03 FIELD QUALITY CONTROL

A. Testing of concrete:
   1. During progress of construction, the Owner will have tests made to determine whether the concrete, as being produced, complies with requirements specified.
   2. Tests will be performed in accordance with ASTM C 31, ASTM C 39, and ASTM C 172.
   3. The Engineer will make and deliver test cylinders to the laboratory and testing expense will be borne by the Owner.
   4. Furnish test equipment.
   5. Make provisions for and furnish concrete for test specimens, and provide manual assistance to the Engineer in preparing said specimens.
   6. Assume responsibility for care of and providing of curing conditions for test specimens in accordance with ASTM C 31.
   7. Sampling frequency:
      a. 1 set of test cylinders for each 150 cubic yards of each class of concrete.
      b. Minimum of 1 set of test cylinders for each class of concrete placed.
      c. Not less than 1 set of test cylinders for each half-day's placement.
      d. At least 2 sets of test cylinders for each structure.

B. Compressive strength tests:
   1. Set of 3 cylinder specimens, 6-inch diameter by 12 inch long.
   2. Information: Test 1 cylinder at 7 days.
   3. Acceptance: Test 2 cylinders at 28 days.

C. Slump tests:
   1. Test slump of concrete using slump cone in accordance with ASTM C 143.
   2. Do not use concrete that does not meet specification requirements in regards to slump:
      a. Remove such concrete from project site.
      b. Test slump at the beginning of each placement, as often as necessary to keep slump within the specified range, and when requested to do so by the Engineer.

D. Air entrainment tests:
   1. Test percent of entrained air in concrete at beginning of each placement, as often as necessary to keep entrained air within specified range, and when requested to do so by the Engineer.
   2. Do not use concrete that does not meet Specification requirements for air entrainment.
      a. Remove such concrete from project site.
   3. Test air entrainment in concrete in accordance with ASTM C 173.
   4. The Engineer may at any time test percent of entrained air in concrete received on project site.

E. Enforcement of strength requirement:
   1. Concrete is expected to reach a compressive strength (f'_c) than that specified in Table A.
   2. Strength level of concrete will be considered acceptable if following conditions are satisfied:
      a. Averages of all sets of 3 consecutive strength test results is greater or equal to specified compressive strength(f'_c).
      b. No individual strength test (average of 2 cylinders) falls below specified compressive strength (f'_c) by more than 500 pounds per square inch.
   3. Non-compliant strength tests:
      a. Mark non-compliant strength test reports to highlight that they contain non-complying results and immediately forward copies of test reports to all parties on the test report distribution list.
      b. Provide treatment of non-compliant concrete at no additional cost to Owner and with no additional time added to project schedule:
      c. Initial treatment may consist of additional curing and testing of the affected concrete.
         1) Provide additional curing of concrete using means and duration acceptable to the Engineer.
         2) Upon completion of the additional curing, provide additional testing designated by the Engineer.
            a) Obtain and test core samples for compression strength in accordance with ASTM C 42, ACI 318, and ACI 350.

b) Provide not less than 3 cores for each affected area. Obtain Engineer's acceptance of proposed coring locations before proceeding with that work.

c) Submit report of compression strength testing for Engineer's review.

3) If additional curing does not bring average of 3 cores taken in affected area to at least the minimum specified compressive strength (f'_c), designate such concrete in affected area as defective.

3.04 FIELD QUALITY ASSURANCE

A. Special inspections and tests, and structural observations:

1. Concrete Construction (IBC Section 1705.3):

a. Special inspections and tests as indicated in Table C.

TABLE C
SPECIAL INSPECTIONS AND TESTS

Verification and Inspection	Reference Standard	Frequency of Inspection	
		Continuous During Task Listed	Periodic During Task Listed
1. Inspection of reinforcing steel, including prestressing tendons, and placement.		–	X
2. Inspection of reinforcing steel welding.	IBC Table 1704.3, Item 5B	–	–
3. Inspect bolts to be installed in concrete prior to and during placement of concrete.		X	–
4. Verifying use of required design mix.		–	X
5. At the time fresh concrete is sampled to fabricate specimens for strength tests, perform slump and air content tests, and determine the temperature of the concrete.		X	–
6. Inspection of concrete and shotcrete placement for proper application techniques.		X	–
7. Inspection for maintenance of specified curing temperature and techniques.		–	X

A. The Contractor shall allow time necessary for Special Inspections as listed above.

B. Sufficient notice shall be given so that the Special Inspections can be performed. This includes time for off-site Special Inspectors to plan the inspection and travel to site.

C. The Special Inspector will immediately notify the Engineer of any corrections required and follow notification with appropriate documentation.

D. The Contractor shall not proceed until the work is satisfactory to the Engineer.

3.05 ADJUSTING

A. Provide repair of defective concrete at no additional cost to Owner and with no additional time added to the project schedule:

B. Make repairs using approach and means acceptable to the Engineer.
   1. Provide repairs having strength equal to or greater than specified concrete for areas involved.
   2. Do not patch, repair, or cover defective work without inspection by the Engineer.
   3. Acceptable means may include, but are not limited to strengthening, repair, or removal and replacement.

C. Strengthening of defective concrete:
   1. By addition of concrete.
   2. By addition of reinforcing.
   3. By addition of both concrete and reinforcing.

D. Repairs:
   1. Methods of repair:
      a. Dry pack method:
         1) Use for holes having depth nearly equal to or greater than least surface dimension of hole, for cone-bolt holes, and for narrow slots cut for repair.
         2) Smooth holes: Clean and roughen by heavy sandblasting before repair.
      b. Mortar replacement method:
         1) Use for holes too wide to dry pack and too shallow for concrete replacement.
         2) Comparatively shallow depressions, large or small, which extend no deeper than nearest surface reinforcement.
      c. Concrete replacement method:
         1) Use when holes extend entirely through concrete section or when holes are more than 1 square foot in area and extend halfway or more through the section.
   2. Preparation of concrete for repair:
      a. Chip out and key imperfections in the work and make them ready for repair.
      b. Obtain Engineer’s acceptance of surface preparation methods and of prepared surfaces prior to repair.
      c. Surfaces of set concrete to be repaired: First coat with epoxy bonding agent as specified in Section 03071.

E. Remove and replace defective concrete.

END OF SECTION

SECTION 03366

TOOLED CONCRETE FINISHING

PART 1 GENERAL

1.01 SUMMARY

A. Section includes: Tooled concrete finishes.

B. Use this Section for the following:
   1. Concrete for water-containing structures, including the following areas:
      a. Filtered Pipe Gallery.
      b. Filter Effluent Channel.
      c. Overflow Structure.
      d. Clearwell Approach Channel.
      e. Clearwell.
   2. Concrete for Sodium Bisulfite Facility.
   3. Concrete for Emergency Generator Facility.

1.02 DELIVERY, STORAGE, AND HANDLING

A. Packing and shipping:
   1. Deliver and store packaged materials in original containers until ready for use.

PART 2 PRODUCTS

2.01 MIXES

A. Mortar mix for F4 finish: Consist of 1 part cement and 1-1/2 parts of fine sand passing Number 100 screen. Mix with enough water and emulsified bonding agent to have consistency of thick cream.

B. Mortar mix for F5 finish: Consist of 1 part cement to 1-1/2 parts of sand which passes Number 16 screen.

PART 3 EXECUTION

3.01 CONCRETE FINISHES

A. Cement for finishes:
   1. Addition of white cement may be required to produce finish which matches color of concrete to be finished.

B. Finish vertical concrete surfaces with one of the following finishes as indicated in the Finish Schedule:

1. F1 finish: No special treatment other than repair defective work and fill depressions 1 inch or deeper and tie holes with mortar after removal of curing compound.
2. F2 finish: No special treatment other than repair defective work, remove fins, fill depressions 1/2 inch or deeper and tie holes with mortar after removal of curing compound.
3. F3 finish: Repair defective work, remove fins, offsets, and grind projections smooth. Fill depressions 1/4 inch or larger in depth or width and tie holes with mortar after removal of curing compound.
4. F4 finish: Receive same finish as specified for F3 finish, and, in addition fill depressions and holes 1/16 inch or larger in width with mortar.
   a. "Brush-Off" sandblast surfaces prior to filling holes to expose all holes near surface of the concrete.
   b. Thoroughly wet surfaces and commence filling of pits, holes, and depressions while surfaces are still damp.
   c. Perform filling by rubbing mortar over entire area with clean burlap, sponge rubber floats, or trowels.
   d. Do not let any material remain on surfaces, except that within pits and depressions.
   e. Wipe surfaces clean and moist cure.
5. F5 finish: Receive same finish as specified for F3 finish, and, in addition, receive special stoned finish, in accordance with following requirements:
   a. Remove forms and perform required repairs, patching, and pointing as specified in this Section.
   b. Wet surfaces thoroughly with brush and rub with hard wood float dipped in water containing 2 pounds of portland cement per gallon.
   c. Rub surfaces until form marks and projections have been removed.
   d. Spread grindings from rubbing operations uniformly over surface with brush in such manner as to fill pits and small voids.
   e. Moist cure brushed surfaces and allow to harden for 3 days:
      1) After curing, obtain final finish by rubbing with carborundum stone of approximately Number 50 grit until entire surfaces have smooth texture and are uniform in color.
      2) Continue curing for remainder of specified time.
   f. If any concrete surface is allowed to become too hard to finish in above specified manner, sandblast and wash related surfaces exposed to view, whether finished or not.
      1) While still damp, rub over surface, plastic mortar, as specified for brushed surfaces and handstoned with Number 60 grit carborundum stone, using additional mortar for brushed surfaces until surface is evenly filled without an excess of mortar.
      2) Continue stoning until surface is hard.
      3) After moist curing for 3 days, make surface smooth in texture and uniform in color by use of Number 50 or Number 60 grit carborundum stone.
      4) After stoning, continue curing until 7 day curing period is completed.

C. Finish horizontal concrete surfaces with one of the following finishes as indicated in the Finish Schedule after proper and adequate vibration and tamping:
   1. S1 finish: Screeded to grade and leave without special finish.

2. S2 finish: Smooth steel trowel finish.
3. S3 finish: Steel trowel finish free from trowel marks. Provide smooth finish free of all irregularities.
4. S4 finish: Steel trowel finish, without local depressions or high points, followed by light hairbroom finish. Do not use stiff bristle brooms or brushes. Perform brooming parallel to slab-drainage. Provide resulting finish that is rough enough to provide nonskid finish. Finish is subject to review and acceptance by the Engineer.
5. S5 finish: Nonslip abrasive: After concrete has been screeded level and hardened enough to support man standing on a board, sprinkle abrasive from shake screen into surface at uniform rate of 25 pounds for each 100 square feet of surface area, wood float into finish, then trowel abrasive into surface with steel trowel properly exposing abrasive in surface as required to provide nonslip surface.
6. S6 finish: Roughened finish: After concrete has been screeded to grade, apply a roughened finish by use of a jitterbug roller or similar device.

D. Finish concrete floor surfaces to which surfacing material is applied: Finish smooth with tolerance within 1/8 inch in 10 feet in any direction from lines indicated on the Drawings.

3.02 CONCRETE FINISH SCHEDULE

A. Finish concrete surfaces as follows:
1. F4 finish for following vertical surfaces:
   a. Concrete surfaces specified or indicated to be painted.
   b. Concrete surfaces, interior or exterior, exposed to view.
2. Surfaces in open channels, basins, and similar structures:
   a. F3 finish for vertical surfaces which are normally below water surface.
   b. F4 finish for vertical surfaces located above normal water surface and exposed to view.
   c. Remove fins and fill tie holes from concrete surfaces located in closed boxes or channels where there is normally no access or passageway.
3. S1 finish for following surfaces:
   a. Projecting footings which are to be covered with dirt.
   b. Slab surfaces which are to be covered with concrete fill.
4. S2 finish for following surfaces:
   a. Tops of corbels.
   b. Tops of walls and beams not covered above in this Section.
   c. Tops of slabs not covered above in this Section.
   d. All other surfaces not specified to be finished otherwise.
5. S3 finish for following surfaces:
   a. Building and machine room floors which are not covered with surfacing material: Provide floors that are free from trowel marks.
6. S4 finish for following surfaces:
   a. Exterior walkways.
   b. Tops of exterior walls or beams which are to serve as walkways.
   c. Tops of exterior walls or beams which are to support gratings.
   d. Top surface of slabs for basins, channels, digesters, and similar structures.

7. S6 finish for following surfaces:
   a. Basin bottoms, or other similar slab surfaces, over which layer of basin bottom grout will be applied.

END OF SECTION

SECTION 03600

GROUTING

PART 1 GENERAL

1.01 SUMMARY

A. Section includes:
   1. Cement grout.
   2. Cement mortar.
   3. Dry-pack mortar.
   4. Epoxy grout.
   5. Grout.
   6. Non-shrink epoxy grout.
   7. Non-shrink grout.

B. Use this Section for the following:
   1. Concrete for water-containing structures, including the following areas:
      a. Filtered Pipe Gallery.
      b. Filter Effluent Channel.
      c. Overflow Structure.
      d. Clearwell Approach Channel.
      e. Clearwell.
   2. Concrete for Sodium Bisulfite Facility.
   3. Concrete for Emergency Generator Facility.

C. Related sections:
   1. The Contract Documents are complementary; what is called for by one is as binding as if called for by all.
   2. It is the Contractor's responsibility for scheduling and coordinating the Work of subcontractors, suppliers, and other individuals or entities performing or furnishing any of Contractor's Work.
   3. The following Sections are related to the Work described in this Section. This list of Related Sections is provided for convenience only and is not intended to excuse or otherwise diminish the duty of the Contractor to see that the completed Work complies accurately with the Contract Documents.
      a. Section 03071 – Epoxies.
      b. Section 03300 – Cast-in-Place Concrete.

1.02 REFERENCES

A. ASTM International (ASTM):
   1. C 109 – Standard Test Method for Compressive Strength of Hydraulic Cement Mortars (using 2-inch or [50-millimeter] cube specimens).
   2. C 230 – Standard Specification for Flow Table for Use In Tests of Hydraulic Cement.

3. C 531 – Standard Test Method for Liner Shrinkage and Coefficient of Thermal Expansion of Chemical-Resistant Mortars, Grouts, Monolithic Surfacings, and Polymer Concretes.
4. C 579 – Standard Test Method for Compressive Strength of Chemical-Resistant Mortars, Grouts, and Monolithic Surfacings and Polymer Concretes.
5. C 939 – Standard Test Method for Flow of Grout for Preplaced-Aggregate Concrete (Flow Cone Method).
6. C 942 – Standard Test Method for Compressive Strength of Grouts for Preplaced-Aggregate Concrete in the Laboratory.
7. C 1107 – Standard Specification for Packaged Dry, Hydraulic-Cement Grout (Non-shrink).
8. C 1181 – Standard Test Methods for Compressive Creep of Chemical-Resistant Polymer Machinery Grouts.

B. International Concrete Repair Institute (ICRI):
1. 310.2R – Selecting and specifying Concrete Surface Preparations for Sealers, Coatings, Polymer Overlays, and Concrete Repair.

C. NSF International (NSF)
1. 61 - Drinking Water System Components - Health Effects.

1.03 SUBMITTALS

A. General:
1. Grout products in direct contact with potable water or process water in treatment: Evidence of compliance with NSF-61 requirements.

B. Cement grout:
1. Mix design.
2. Material submittals.

C. Cement mortar:
1. Mix design.
2. Material submittals.

D. Non-shrink epoxy grout:
1. Manufacturer's literature.

E. Non-shrink grout:
1. Manufacturer's literature.

1.04 DELIVERY, STORAGE, AND HANDLING

A. Deliver materials to jobsite in their original, unopened packages or containers, clearly labeled with manufacturer's product identification and printed instructions.

B. Store materials in cool dry place and in accordance with manufacturer's recommendations.

C. Handle materials in accordance with the manufacturer's instructions.

PART 2 PRODUCTS

2.01 GENERAL

A. Grouts installed at locations in direct contact with potable water or process water undergoing treatment: Listed as acceptable under NSF-61 based on testing by a recognized national laboratory acceptable to the Engineer.

2.02 MANUFACTURED UNITS

A. Non-shrink epoxy grout:
   1. Manufacturers: One of the following or equal:
      a. Five Star Products, Inc., Five Star Epoxy Grout.
      b. BASF Construction Chemicals, Masterflow 648 CP Plus.
      c. L&M Construction Chemicals, Inc., EPOGROUT.
   2. Non-shrink epoxy grout shall be 100 percent solid, premeasured, prepackaged system containing 2-component thermosetting epoxy resin and inert aggregate.
   3. Maintain flowable consistency for at least 45 minutes at 70 degrees Fahrenheit.
   4. Shrinkage or expansion: Less than 0.0006 inches per inch when tested in accordance with ASTM C 531.
   5. Minimum compressive strength: 10,000 pounds per square inch at 24 hours and 14,000 pounds per square inch at 7 days when tested in accordance with ASTM C 579, Method B.
   6. Compressive creep: Not exceed 0.0027 inches/per inch when tested under 400 pounds per square inch constant load at 140 degrees Fahrenheit in accordance with ASTM C 1181.
   7. Coefficient of thermal expansion: Not exceed 0.000018 inches per inch per degree Fahrenheit when tested in accordance with ASTM C 531, Method B.

B. Non-shrink grout:
   1. Manufacturers: One of the following or equal:
      a. Five Star Products, Inc, Five Star Grout.
      b. BASF Construction Chemicals, Masterflow 928.
      c. L&M Construction Chemicals, Inc., CRYSTEX.
   2. In accordance with ASTM C 1107.
   3. Preportioned and prepackaged cement-based mixture.
   4. Contain no metallic particles such as aluminum powder and no metallic aggregate such as iron filings.
   5. Require only addition of potable water.
   6. Water for pre-soaking, mixing, and curing: Potable water.
   7. Free from emergence of mixing water from within or presence of water on its surface.
   8. Remain at minimum flowable consistency for at least 45 minutes after mixing at 45 degrees Fahrenheit to 90 degrees Fahrenheit when tested in accordance with ASTM C 230.

a. If at fluid consistency, verify consistency in accordance with ASTM C 939.

9. Dimensional stability (height change):
   a. In accordance with ASTM C 1107, volume-adjusting Grade B or C at 45 degrees Fahrenheit to 90 degrees Fahrenheit.
   b. Have 90 percent or greater bearing area under bases.
10. Have minimum compressive strengths at 45 degrees Fahrenheit to 90 degrees Fahrenheit in accordance with ASTM C 1107 for various periods from time of placement, including 5,000 pounds per square inch at 28 days when tested in accordance with ASTM C 109 as modified by ASTM C 1107.

2.03 MIXES

A. Cement grout:
   1. Use same sand-to-cementitious materials ratio for cement grout mix that is used for concrete mix.
   2. Use same materials for cement grout that are used for concrete.
   3. Use water-to-cementitious materials ratio that is no more than that specified for concrete.
   4. For spreading over surfaces of construction or cold joints.

B. Cement mortar:
   1. Use same sand-to-cementitious materials ratio for cement mortar mix that is used for concrete mix.
   2. Use same materials for cement mortar that are used for concrete.
   3. Use water-to-cementitious materials ratio that is no more than that specified for concrete being repaired.
   4. At exposed concrete surfaces not to be painted or submerged in water: Use sufficient white cement to make color of finished patch match that of surrounding concrete.

C. Dry-pack mortar:
   1. Proportions by weight: 1 part portland cement to 2 parts concrete sand.
      a. Portland cement: As specified in Section 03300.
      b. Concrete sand: As specified in Section 03300.

D. Epoxy grout:
   1. Consist of mixture of epoxy or epoxy gel and sand.
      a. Epoxy: As specified in Section 03071.
      b. Epoxy gel: As specified in Section 03071.
      c. Sand: Clean, bagged, graded, and kiln-dried silica sand.
   2. Proportioning:
      a. For horizontal work: Consist of mixture of 1 part epoxy with not more than 2 parts sand.
      b. For vertical or overhead work: Consist of 1 part epoxy gel with not more than 2 parts sand.

E. Grout:
   1. Mix in proportions by weight: 1 part portland cement to 4 parts concrete sand.
      a. Portland cement: As specified in Section 03300.
      b. Concrete sand: As specified in Section 03300.

F. Non-shrink epoxy grout:
   1. Mix in accordance with manufacturer's installation instructions.

G. Non-shrink grout:
   1. Mix in accordance with manufacturer's installation instructions such that resulting mix has flowable consistency and is suitable for placing by pouring.

PART 3 EXECUTION

3.01 EXAMINATION

A. Inspect concrete surfaces to receive grout or mortar and verify that they are free of ice, frost, dirt, grease, oil, curing compounds, paints, impregnations, and loose material or foreign matter likely to reduce bond or performance of grout or mortar.

3.02 PREPARATION

A. Surface preparation for grouting other baseplates:
   1. Remove grease, oil, dirt, dust, curing compounds, laitance, and other deleterious materials that may affect bond to concrete and bottoms of baseplates.
   2. Roughen concrete surfaces in contact with grout to ICRI CSP-6 surface profile or rougher.
      a. Remove loose or broken concrete.
   3. Metal surfaces in contact with grout: Grit blast to white metal surface.

3.03 INSTALLATION

A. Mixing:
   1. Cement grout:
      a. Use mortar mixer with moving paddles.
      b. Pre-wet mixer and empty out excess water before beginning mixing.
   2. Cement mortar:
      a. Use mortar mixer with moving paddles.
      b. Pre-wet mixer and empty out excess water before beginning mixing.
   3. Dry-patch mortar:
      a. Use only enough water so that resulting mortar will crumble to touch after being formed into ball by hand.
   4. Non-shrink epoxy grout:
      a. Keep temperature of non-shrink epoxy grout from exceeding manufacturer's recommendations.
   5. Non-shrink grout:
      a. May be drypacked, flowed, or pumped into place. Do not overwork grout.
      b. Do not retemper by adding more water after grout stiffens.

B. Placement:
   1. Cement grout:
      a. Exercise care in placing cement grout because it is required to furnish structural strength, impermeable water seal, or both.

b. Do not use cement grout that has not been placed within 30 minutes after mixing.

2. Cement mortar:
   a. Use mortar mixer with moving paddles.
   b. Pre-wet mixer and empty out excess water before beginning mixing.
3. Epoxy grouts:
   a. Wet surfaces with epoxy for horizontal work or epoxy gel for vertical or overhead work prior to placing epoxy grout.
4. Non-shrink epoxy grout:
   a. Mix in complete units. Do not vary ratio of components or add solvent to change consistency of mix.
   b. Pour hardener into resin and mix for at least 1 minute and until mixture is uniform in color. Pour epoxy into mortar mixer wheelbarrow and add aggregate. Mix until aggregate is uniformly wetted. Over mixing will cause air entrapment in mix.
5. Non-shrink grout:
   a. Add non-shrink cement grout to premeasured amount of water that does not exceed the manufacturer's maximum recommended water content.
   b. Mix in accordance with manufacturer's instructions to uniform consistency.

C. Curing:
1. Cement based grouts and mortars:
   a. Keep continuously wet for minimum of 7 days. Use wet burlap, soaker hose, sun shading, ponding, and in extreme conditions, combination of methods.
   b. Maintain above 40 degrees Fahrenheit until it has attained compressive strength of 3,000 pounds per square inch, or above 70 degrees Fahrenheit for minimum of 24 hours to avoid damage from subsequent freezing.
2. Epoxy based grouts:
   a. Cure grouts in accordance with manufacturers' recommendations.
      1) Do not water cure epoxy grouts.
   b. Do not allow any surface in contact with epoxy grout to fall below 50 degrees Fahrenheit for minimum of 48 hours after placement.

D. Grouting other baseplates:
1. General:
   a. Use non-shrink grout as specified in this Section.
   b. Baseplate grouting shall take place from one side of baseplate to other in continuous flow of grout to avoid trapping air in grout.
   c. Maintain hydrostatic head pressure by keeping level of grout in headbox above bottom of baseplate. Fill headbox to maximum level and work grout down.
   d. Vibrate, rod, or chain non-shrink grout to facilitate grout flow, consolidate grout, and remove trapped air.
2. Forms and headboxes:
   a. Build forms using material with adequate strength to withstand placement of grouts.
   b. Use forms that are rigid and liquidtight. Caulk cracks and joints with elastomeric sealant.

c. Line forms with polyethylene for easy grout release. Coating forms with 2 coats of heavy-duty paste wax is also acceptable.
d. Headbox shall be 4 to 6 inches higher than baseplate and shall be located on one side of baseplate.
e. After grout sets, remove forms and trim back grout at 45 degree angle from bottom edges of baseplate.

3.04 FIELD QUALITY CONTROL

A. Non-shrink epoxy grout:
   1. Test for 24-hour compressive strength in accordance with ASTM C 579, Method B.

B. Non-shrink grout:
   1. Test for 24-hour compressive strength in accordance with ASTM C 942.

END OF SECTION

SECTION 03800

CONCRETE ELECTRICAL RACEWAY ENCASEMENT

PART 1 GENERAL

1.01 SCOPE OF WORK

A. Furnish all labor, materials, equipment and incidentals required and install concrete encasement around underground electrical raceways as shown on the Drawings and as specified herein.

1.02 MEASUREMENT AND PAYMENT

A. No separate payment will be made for concrete electrical raceway encasement. Include payment in the lump sum base bid.

1.03 RELATED WORK

A. Excavation, backfilling, fill and grading are included in Division 2.

B. Concrete formwork is included in Section 03102.

C. Concrete joints and joint accessories are included in Section 01350.

D. Cast-in-place concrete is included in Section 03300.

E. Furnishing and installing electrical conduit is included in Division 16.

F. Furnishing and placing polyethylene warning tape in the backfill above encasement is included in Division 16.

PART 2 PRODUCTS

2.01 MATERIALS

A. Cement, lime, aggregate and all other concrete components shall be as specified in Section 03300 except that aggregate size shall not exceed 3/8 in. Concrete shall have a minimum compressive strength at 28 days of 2500 psi.

PART 3 EXECUTION

3.01 GENERAL

A. Concrete shall conform to the requirements Section 03300 and as specified herein.

B. Provide not less than 4-in of concrete between the outside of a raceway and the earth. Provide not less than 2-in of concrete between adjacent raceways. Form as specified in Section 03102 for buried concrete.

C. All raceway concrete placements shall be continuous between manholes or handholes and between manholes or handholes and structures.

D. Where raceways pass through concrete walls, concrete encasement shall be extended through the finished flush with inside surfaces. Watertight construction joints with waterstops conforming to Section 03150 shall be provided.

E. Encasements shall be reinforced as and where indicated on the Drawings.

F. Encasements shall be laid in trenches on mats of screened gravel not less than 6-in thick.

G. The minimum cover for raceway banks shall be 24-in.

END OF SECTION

SECTION 03921

STRENGTHENING OF CONCRETE WITH EXTERNALLY BONDED FRP REINFORCEMENT

PART 1 GENERAL

1.01 SUMMARY

A. Section includes: Requirements for strengthening of traditionally reinforced concrete using externally bonded fiber-reinforced polymer composite system. Permitted constituent materials, minimum performance requirements of those constituent materials, and minimum performance requirements for glass fiber-reinforced polymer (GFRP) laminate made from those constituent materials using a wet layup method are included.

B. Use this Section for the following:
   1. Concrete for water-containing structures, including the following areas:
      a. Filtered Pipe Gallery.
      b. Filter Effluent Channel.
      c. Overflow Structure.
      d. Clearwell Approach Channel.
      e. Clearwell.
   2. Concrete for Sodium Bisulfite Facility.
   3. Concrete for Emergency Generator Facility.

C. Related sections:
   1. The Contract Documents are complementary; what is called for by one is as binding as if called for by all.
   2. It is the Contractor’s responsibility for scheduling and coordinating the Work of subcontractors, suppliers, and other individuals or entities performing or furnishing any of Contractor’s Work.
   3. The following Sections are related to the Work described in this Section. This list of Related Sections is provided for convenience only and is not intended to excuse or otherwise diminish the duty of the Contractor to see that the completed Work complies accurately with the Contract Documents.
      a. Section 01110 - Summary of Work
      b. Section 01330 – Submittal Procedures
      c. Section 01450 – Contractor's Quality Control
      d. Section 01452 – Inspection Services.

1.02 REFERENCES

A. American Concrete Institute (ACI):
   1. ACI 440.2R-08 – Guide for the Design and Construction of Externally Bonded FRP Systems for Strengthening Concrete Structures.
   2. ACI 503.4 – Standard Specification for Repairing Concrete with Epoxy Mortar.

B. American Standard for Testing and Materials (ASTM):
   1. ASTM C 882 – Standard Test Method for Bond Strength of Epoxy-Resin Systems Used With Concrete by Slant Shear.
   2. ASTM C 1583 - Standard Test Method for Tensile Strength of Concrete Surfaces and the Bond Strength or Tensile Strength of Concrete Repair and Overlay Materials by Direct Tension (Pull-off Method).
   3. ASTM D 638 – Standard Test Method for Properties of Plastics.
   4. ASTM D 732 – Standard Test Method for Shear Strength of Plastics by Punch Tool.
   5. ASTM D 790 – Standard Test Methods for Flexural Properties of Unreinforced and Reinforced Plastics and Electrical Insulating Materials.
   6. ASTM D 2563 – Standard Practice for Classifying Visual Defects in Glass-Reinforced Plastic Laminate Parts.
   7. ASTM D 3039 – Standard Test Method for Tensile Properties of Polymer Matrix Composite Materials.
   8. ASTM D 4065 - Standard Practice for Plastics: Dynamic Mechanical Properties: Determination and Report of Procedures.
   9. ASTM D 4541 – Standard Test Method for Pull-off Strength of Coating Using Portable Adhesion Testers.
   10. ASTM D 7522 – Standard Test Method for Pull-off Strength for FRP Bonded to Concrete Substrate.
   11. ASTM D 7565 – Standard Test Method for Determining Tensile Properties of Fiber Reinforced Polymer Matrix Composites Used for Strengthening of Civil Structures.

C. International Code Council (ICC):
   1. ICC-ES AC125 – Acceptance Criteria for Concrete and Reinforced and Unreinforced Masonry Strengthening Using Externally Bonded Fiber Reinforced Polymer (FRP) Composite Systems.
   2. ICC-ES AC178 – Interim Criteria for Inspection and Verification of Concrete and Reinforced and Unreinforced Masonry Strengthening Using Externally Bonded Fiber Reinforced (FRP) Composite Systems.

D. International Concrete Repair Institute (ICRI):
   1. ICRI Publication 210.3 – Guide for Using In-Situ Tensile Pull-Off Tests to Evaluate Bond of Concrete Surface Materials.
   2. ICRI Publication 310.2 - Selecting and Specifying Concrete Surface Preparation for Sealers, Coatings, Polymer Overlays, and Concrete Repair.

E. NSF International (NSF):
   1. 61 - Drinking Water System Components - Health Effects.

1.03 DEFINITIONS

A. Fabric reinforcement: Reinforcing fibers in fabric form.

B. Fiber-reinforced polymer lamina: A single layer of composite material made by combining fabric reinforcement and saturating resin matrix.

C. Fiber-reinforced polymer system: The product fabricated using the wet layup method with the FRP strengthening system manufacturer's fiber reinforcement and saturating resin prepared and installed in accordance with the FRP strengthening system manufacturer's instructions.

D. Mean property: A property value provided by the manufacturer that is no greater than the mean of results obtained by a specified test method for at least the specified number of specimens.

E. Ply: A single layer of fiber reinforcement.

F. Tow: An untwisted bundle of continuous filament.

G. Ultimate property: A property value provided by the manufacturer that is no greater than the mean minus three standard deviations of results obtained by a specific test method for at least the specified number of specimens.

H. Wet layup: A manufacturing process where dry fabric fiber reinforcement is impregnated on-site with a saturating resin matrix and then cured in-place.

1.04 SUBMITTALS

A. General
   1. Submit in accordance with Section 01330 unless modified in this Section.

B. Product data**:**
   1. Submit FRP strengthening system manufacturer’s product data sheet indicating product standards; physical, mechanical, and chemical properties of materials used; environmental durability information; and general recommendations.
      a. Demonstrate properties of composite materials determined by independent laboratory testing in accordance with the ASTM standards indicated in Part II.
      b. Materials Safety Data Sheets (MSDS) for each product to be on-site during the installation.
      c. Manufacturer defined resin working time.
      d. For FRP systems placed in direct contact or exposed to potable water or process water in treatment shall have a NSF 61 certification or be coated with a product that is compatible with the FRP system and has a NSF 61 certification approving the entire system when coated with the specified coating. Submit coatings to Engineer for approval.
      e. Manufacturer data sheets and installation instructions for concrete repair materials:
         1) Repair mortars for filling surface voids.
         2) Crack injection materials.
         3) Epoxy mortars for leveling.

C. Shop drawings:
   1. Submit shop drawings indicating type, extents and limits of FRP reinforcing; locations and details of mechanical and FRP anchorage; reinforcing material

development lengths and splice lengths for each ply; number of plies and orientation of each ply in the finished construction; and system manufacturer's recommended details for edges, terminations, and joints in the FRP strengthening system.

D. Samples:
   1. Samples of fiber reinforcement fabric if requested by the Engineer.

E. Certificates:
   1. Submit certificate by FRP strengthening system manufacturer that supplied products comply with local regulations controlling use of volatile organic compounds (VOCs).
      a. Products that require use of respirators are not considered to comply with local regulations controlling use of VOCs. Do not use materials that require use of respirators.

F. Manufacturer's instructions:
   1. Submit installation procedures including requirements for condition of surfaces receiving the FRP strengthening system; surface preparation requirements; handling and installation procedures for each component of the system; application rates; curing methods; and other general recommendations for each material to be used.

G. Quality control submittals:
   1. Submit project data indicating product standards, physical, and chemical characteristics, technical specifications, limitations, installation instructions, environmental durability, and general recommendations regarding each individual material. FRP composite systems shall be compliant with ICC AC125 and provide a current ICC Evaluation Service Report, in accordance with the building code specified in Section 01110.
   2. System manufacturer qualifications. Submit qualification as specified under Quality Assurance in Part I of this Section.
   3. Installer / applicator qualifications:
      a. Submit a list of completed surface bonded FRP composite strengthening projects constructed using system manufacturer's FRP composite system in past 3 years. The list should include, at minimum, 10 projects with proposed FRP composite systems; the dates of work; and type, description, and amount of work performed.
      b. Submit evidence of training by system manufacturer for installation of the products to be provided for this work.
      c. Submit system manufacturer's current authorization to install products to be provided.
   4. Submit for record copies of manufacturer's product labels for products installed in the Work. Include product batch numbers and expiration dates. Submit as copies, digital photos, or by other means acceptable to the Engineer.

H. Field quality control:
   1. Submit results of pull-off tests made to determine FRP adhesion to the prepared concrete substrate:

a. For all bond strength tests (pull-off tests), note locations and indicate names of personnel performing the test.

2. Submit results of tension strength testing of FRP composite samples.
3. Submit for record daily construction logs prepared by the Contractor. Include, at a minimum, the following information:
   a. Weather and temperature during periods of FRP strengthening system application; volume(s) or quantity(ies) of product(s) used and square footage/linear footage of substrate covered; batch or lot number of all products used; and names of crew members.

I. Qualifications statements:
1. Submit written verification from the system manufacturer that their applicator has received required certifications and training in installation of the system to be provided.
2. Submit statement of qualifications for the contractor installing the system. Indicate completed FRP reinforcement projects. Include project name, size, location, owner, engineer responsible for that project, general contractor for whom the work was performed. Provide general description of work completed and FRP reinforcement system and component materials used. Include contact data for engineer and general contractor (if any).

1.05 QUALITY ASSURANCE:

A. Pre-installation Conference:
1. Require representatives of each entity directly concerned with FRP composite systems to attend, including the following:
   a. Contractor's superintendent.
   b. FRP subcontractor.
   c. Engineer.
   d. Contractor's testing laboratory providing testing for Field Quality Control.
   e. Owner's special inspectors and testing laboratories providing Field Quality Assurance.
2. Items to be discussed during the conference shall include as a minimum:
   a. Special inspection and testing procedures for field quality control
   b. Cold and hot-weather installation limits and procedures
   c. Installation time lines and procedures
   d. Curing procedures
   e. Connections to FRP
   f. Dust control measures
   g. Humidity and surface moisture control measures
   h. Odor and VOC emissions
   i. Other pertinent items.

B. Qualifications:
1. System manufacturer: As named in Part II:
   a. Minimum 10 years' experience in production and installation of FRP strengthening systems and products specified for this Work.

2. Applicator:
   a. Minimum of 5 years field experience in installation of the FRP strengthening system and products provided for the Work, including at least 2 installations under similar conditions and of similar size and complexity.
   b. Site supervisor and installer trained by manufacturer of the products to be installed, having not less than 2 years' experience in installation of the products, and holding current authorization for installation of those products by that manufacturer.
3. Training:
   a. FRP strengthening system manufacturer shall have an ongoing program for contractor training, certification, and technical support.
   b. Contractor's staff installing the FRP strengthening system shall have completed the system manufacturer's training in installation of the system.

C. Regulatory requirements:
   1. Provide materials and systems acceptable to authorities having jurisdiction as indicated in Section 01110.

D. Services of Manufacturer's Representative:
   1. A qualified and authorized representative of the manufacturer of the strengthening system shall be present on site for the first placement of each material. Representative shall:
      a. Observe preparation and conditions of surfaces receiving strengthening materials:
      b. Prepare field reports of on-site observations and submit to Engineer as record information within 24 hours after his/her site visit.

1.06 DELIVERY, STORAGE, AND HANDLING

A. Delivery:
   1. Before delivery, confirm that all materials to be used under this Section conform to federal, state, and local laws and regulations including those concerning worker safety and environmental protection.
   2. Deliver materials in original, unopened, factory-sealed containers with FRP strengthening system manufacturer's labels intact and legible. Labels shall include date of manufacture, batch number, and shelf life.

B. Storage and protection:
   1. Store materials in protected areas, out of direct sunlight and conforming to system manufacturer's recommendations.
   2. Store materials between 40 degrees Fahrenheit and 100 degrees Fahrenheit.
   3. Avoid contact with soil and moisture.
   4. Protect products from UV exposure.

C. Handling:
   1. Handle products in accordance with system manufacturer's recommendations.
   2. Inspect products prior to application to confirm that they are undamaged and intact, and that products conform to those submitted to and accepted by the Engineer.

3. Do not use products that have exceeded their shelf life.
4. Dispose of empty containers in compliance with all federal, state, and local regulations.

1.07 FIELD CONDITIONS

A. Condition, mix, and apply FRP strengthening system and its components only during temperature and humidity conditions recommended by the system manufacturer:
   1. Do not apply FRP Reinforcement materials if raining, snowing, or dew condensation is expected or existing concrete surface is wet or if the ambient or surface temperatures are below 40 degrees Fahrenheit (4°C).
   2. The ambient temperature and the temperature of the epoxy components shall be between 50 degrees Fahrenheit (10°C) and 80 degrees Fahrenheit (27°C) at the time of mixing, unless a tighter temperature range is recommended by the system manufacturer.

B. Materials will be installed inside existing structures:
   1. The Contractor is solely responsible for fume control. During application and curing of materials, take necessary precautions against injury to installers, building occupants, and occupants of adjacent or nearby buildings.
   2. Comply with all state, federal, and local safety and fume control regulations.
   3. Comply with all safety requirements stated on manufacturer's MSDS sheets.
   4. Ventilate areas, and use protective equipment as required.

PART 2 PRODUCTS

2.01 GENERAL

A. All materials applied to a given surface or member (including those for surface and crack repair, and those for surface priming or preparation) shall be products of a single manufacturer to ensure compatibility.

B. FRP strengthening system and components shall hold the following certifications:
   1. Completed installation of reinforcement fabric and epoxy primer/saturant:
      a. Acceptance under ICC AC-125, or other criteria acceptable to the Engineer and to the authorities having jurisdiction.
         1) The decision of each of these parties regarding the acceptability of alternate criteria shall be theirs alone, and their decisions will be final.
      b. For installations at locations exposed to or in direct contact with potable water or process water in treatment: Listed as acceptable under NSF 61, or coated with top coating which allows for the complete system to be listed as acceptable under NSF 61.
         1) Provide listing based on testing by a recognized national laboratory acceptable to the Engineer.
         2) Confirm availability of current listing for products named in this Section before installation.

C. FRP strengthening system shall consist of the following components:

1. Epoxy repair mortar / filler for preparation of concrete surfaces.
2. Concrete surface primer.
3. FRP reinforcement fabric.
4. Mechanical anchoring components.
5. Fabric saturant.
6. Finished top coat if required for specified exposure conditions.

D. Manufacturers:
1. Glass Fiber Fabric FRP Strengthening System:
   a. Sika Corporation.
   b. Fyfe Company, LCC.
   c. Simpson Strong-Tie.
2. Product substitutions:
   a. The following paragraphs specify repair products from the manufacturer(s) listed. Contractor and manufacturer of repair products shall review the work under this project, and determine which products from manufacturer's line will provide the required properties for compatibility, strength, workability, durability, environmental conditions expected during the project, and Contractor's operations.
   b. If, based on the preceding considerations, Contractor and manufacturer recommend products other than those that follow, submit such recommendations to Engineer as part of the required product and procedure submittals:
      1) Engineer will consider Contractor's request for use of products other than those specified based on the joint recommendations of Contractor and repair product manufacturer, providing such recommendation is submitted to Engineer in writing and includes the following information:
         a) Cover letter listing proposed alternate repair products with explanation of reasons for requesting changes.
         b) Full listing of all products and preparation and installation procedures to be included in a given type of repair.
         c) Certificate of compliance from an approved independent testing laboratory demonstrating that the substitute products meet or exceed the specified performance criteria when tested in accordance with the specified reference standards.
         d) References for 5 projects where substitute products were installed and have at least 3 years' proven record of performance. Include project name, date of installation, description of all products used in the repair, and name of contact with telephone number for Engineer to contact.

2.02 CONCRETE SURFACE REPAIR SYSTEMS

A. Epoxy repair mortar / surface filler:
1. 2-component, 100 percent solids, moisture-tolerant, high-modulus, high-strength, non-sag, epoxy paste.
2. Physical properties as specified in Table 03921-A.

Table 03921-A: Epoxy Repair Mortar, Physical Properties:		
Property (minimum unless noted)	**Requirement**	**ASTM Test Method**
Tensile properties, 7 days		
– Strength:	3,090 psi	D 638
– Elongation at break:	0.56 percent	D 638
– Modulus of elasticity:	9.2 x 10^5 psi	D 790
Shear strength, 14 days	3,600 PSI	D 732
Bond strength, hardened concrete to hardened concrete		C 882
– 2-day moist cure	2,400 psi	
– 14 day moist cure	2,900 psi	
System Manufacturer / Product:		
Sika Corporation	Sikadur 31	
Fyfe Co	Tyfo WP Epoxy	
Simpson Strong-Tie	CSS-EP	
Notes: (1) Repair mortar must be fully covered by NSF-listed FRP system if not NSF approved.		

2.03 GLASS FIBER FABRIC FRP STRENGTHENING SYSTEM

A. Concrete surface repair materials: As specified in Paragraph 2.02 unless otherwise noted.

B. Concrete surface primer and fabric saturant:
   1. 2-component, 100 percent solids, moisture tolerant, high-modulus, high-strength epoxy.
   2. Physical properties of epoxy: As indicated in Table 03921-B.

Table 03921-B: Concrete Surface Primer and Fabric Saturant, Physical Properties:			
Property(1)	**Requirement (14-days)**	**Requirement (7-days)**	**ASTM Test Method**
Tensile Strength	10,400 psi	4,900 psi	D 638
Tensile Modulus, minimum	306,000 psi	---	D 638
Elongation at Break, minimum	4.8%	1.2%	D 638
Flexural Strength, minimum	17,900 psi	8,800 psi	D 790
Flexural Modulus, minimum	450,000 psi	439,000 psi	D 790
Glass Transition Temp., T_g	174°F(2)	115°F (48°C)	D 4065
Pot life	---	57 minutes	---
Tack-free time	14 -16 hours	4 – 5 hours	---

Table 03921-B: Concrete Surface Primer and Fabric Saturant, Physical Properties:			
Property(1)	**Requirement (14-days)**	**Requirement (7-days)**	**ASTM Test Method**
Manufacturer:			
Sika Corporation	Sikadur, Hex 300		
Fyfe Co	Tyfo S(2)		
Simpson Strong-Tie	CSS-ES(2)		

Notes:
(1) Unless otherwise noted, properties are for material at, or curing conditions of: 73 degrees Fahrenheit and 50 percent relative humidity.
(2) Requires additional post cure at 140º F to achieve properties listed.
(3) Surface primer and fabric saturant must be fully covered by NSF-listed FRP system if not NSF approved.

C. Minimum physical properties of cured glass fiber fabric/epoxy laminate: As indicated Table 03921-C.

Table 03921-C: Glass Fiber Laminate Assembly, Physical Properties After Curing		
Property*	**Requirement**	**ASTM Test Method**
Laminate tensile strength in primary fiber direction minimum:	56,000 psi (uni-directional) 32,400 psi (bi-directional)	D 3039
Laminate tensile modulus in primary fiber direction, minimum:	2.9×10^6 psi (uni-directional) 2.16×10^6 psi (bi-directional)	D 3039
Laminate elongation at break, minimum:	1.76% (uni-directional) 1.2% (bi-directional)	D 3039
Ply thickness:	0.04 in	
Laminate tensile strength, percent retained after: – 7 days, 100% humidity, 100°F(38°C) – 3,000 hrs exposure to alkali – 3,000 hrs exposure to salt water – 3,000 hrs exposure at 140°F (60°C)	90 percent 90 percent 90 percent 90 percent	
Visual Defects: “Level I-IV”	Conforms	D 2563
Manufacturers/Products:	Uni-directional	Bi-directional(4)
Sika Corporation(2)	SikaWrap Hex 100G w/ Sikadur Hex 306	Hex 106G w/ Sikadur Hex 306
Fyfe Co	Tyfo SEH-51A	Tyfo WEB(3)
Simpson Strong-Tie	CSS-CUGF27	CSS-CBGF424

Table 03921-C: Glass Fiber Laminate Assembly, Physical Properties After Curing
Notes: (1) Unless otherwise noted, properties are average values for laminate samples cured for at least 7 days at 70 degrees Fahrenheit, then post- cured at 140 degrees Fahrenheit for 48 hours. (2) Sika FRP strengthening systems are required to be coated with Sikagard 62 to the minimum thickness specified in the NSF-61 Listed Application certificate for the complete Sika FRP system. (3) Fyfe Tyfo WEB strengthening system is required to be coated with Tyfo PWC to the minimum thickness specified in the NSF-61 Listed Application certificate for the complete Fyfe FRP system. (4) Bi-directional FRP strengthening systems shall be shown to provide a water-tight barrier while pressurized when fully cured.

2.04 FRP Anchoring Systems

A. Provide FRP composite anchors where indicated on the Drawings.

B. Materials:
   1. Uni-directional fiber bundles with the "head" end embedded into the concrete substrate using epoxy, and with the "tail" end fanned-out and embedded in the laminate.
   2. Fiber material matching that of the fabric being placed.
   3.

C. Minimum physical properties of both glass and carbon FRP anchoring systems: As indicated in Table 03921-D.

Table 03921-D: FRP Anchoring System Physical Properties

Property	**Glass FRP Anchor**	**Carbon FRP Anchor**	**ASTM Test Method**
Fiber tensile strength, minimum:	360,00 psi	230,000 psi	D 3039
Fiber tensile modulus, minimum:	10,000,000 psi	31,000,000 psi	D 3039
Elongation at break, minimum:	4.0%	0.74%	D 3039
Density, minimum:	0.09 lb/in^3	0.065 lb/in^3	
Manufacturers/Products:			
Sika Corporation		SikaWrap Anchor C	
Fyfe Co	Tyfo SEH Composite Anchors		

PART 3 EXECUTION

3.01 EXAMINATION

A. Inspect surfaces to receive the work. Report immediately in writing to the Engineer deficiencies in the surface that render it unsuitable for proper execution of this work.

3.02 PREPARATION

A. Protection of in-place conditions:
   1. Protect concrete, equipment, and other items surrounding work area from dust or damage due to the Work.
   2. Interior work. Tent work area with heavy polyethylene film, or provide other protection acceptable to the Engineer, to prevent dust or debris from migrating from the work area into other portions of the structure.
   3. Take precautions to avoid damage, spills, and overspray on surfaces near the work.

B. Erect and maintain barricades:
   1. Protect workers installing the strengthening systems from falls at floor openings and changes in elevation.
   2. Protect work areas from entry by personnel not involved in installation of the system.

C. Demolition / removal:
   1. Remove or relocate equipment and appurtenances in the work areas as indicated on the Drawings.

D. Surface preparation for bonding:
   1. Concrete surfaces receiving FRP strengthening systems shall be sound, without projections or depressions in excess of those allowed by the system manufacturer, clean, dry and free of surface moisture.
   2. Remove existing paint, coatings, and surface contaminants, and prepare surfaces in accordance with manufacturer’s installation instructions and to the manufacturer's recommended conditions.
   3. Remove grease, cleaning or stripping compounds, curing compounds, waxes, impregnations, foreign particles, and other bond inhibiting materials by cleaning methods acceptable to the Engineer.
   4. Locate deteriorated or unsound concrete areas using a hammer tap or chain drag sound method. Mark boundaries of regions to be removed for repair.
   5. Locate existing steel reinforcement on surfaces to receive FRP using a rebar locator.
      a. If clear cover on steel reinforcement is less than that shown on the drawings or if removal of unsound concrete leads to less than 3/4" cover on #7 bars and smaller or less than 1" cover on #8 bars or larger after surface preparation, the cover shall be built up using a methods and materials acceptable to the manufacturer of the FRP strengthening system and the Engineer.

6. Grind, abrasive blast, or steel shotblast concrete surfaces to remove existing laitance or deteriorated/unsound concrete and to expose sound aggregate.
   a. Prepare surfaces in accordance with ICRI 310.2 to Concrete Surface Profile CSP-3 ("light shotblast") profile or as recommended by FRP strengthening system manufacturer.
   b. Provide a uniform surface without abrupt projections or depressions.
7. Fill "bugholes" and concrete depressions deeper than 1/32 inch using epoxy mortar (diameter or depth less than 1 inch) or cementitious repair mortar (diameter or depth greater than 1 inch) recommended by the strengthening system manufacturer. Prepare holes, and install and cure mortar as recommended by the manufacturer of those products.
8. Cracks in existing concrete substrate having widths exceeding FRP strengthening system manufacturer's recommended limits must be pressure injected with epoxy or similar material approved by the Engineer.

E. Unless otherwise recommended by the manufacturer, apply 1 prime coat of FRP strengthening system manufacturer's epoxy and allow to cure for minimum of 1 hour.
   1. Provide anchorage as detailed on Drawings, if required.
   2. Edge and corner preparation:
      a. Round off sharp and chamfered corners to minimum radius of 0.5-inch by means of grinding exterior edges, or filling interior corners with the FRP composite system's thickened epoxy mortar.
      b. Variations in radius along edge shall not exceed 0.5-inch for each 12 inches of length.
   3. Clean contact surfaces by blasting with compressed air and by vacuuming as required to create a dust-free surface for application of the FRP strengthening system. Clean surrounding areas and surfaces by similar methods to prevent dust and debris from contaminating the work area.

3.03 CONCRETE BOND STRENGTH TEST

A. Confirm the adhesion strength of the concrete surface to substrate after preparation and before installation of FRP by pull-off testing.
   1. Perform tests as specified in ICRI 210.3 or ASTM C1583.
   2. Testing. At each surface that receives FRP strengthening:
      a. Provide at least 1 test at each member (wall, beam, or column).
      b. Provide not less than 1 test for every 120 square feet of finished FRP reinforcement, or fraction thereof.

B. Minimum tensile strength of prepared surfaces: 200 psi with concrete substrate failure, unless otherwise approved by the Engineer and the manufacturer of the FRP strengthening system.

3.04 INSTALLATION OF STRENGTHENING SYSTEM

A. Install FRP strengthening system components in full compliance with the system manufacturer's recommendations.

B. Ambient and substrate temperatures.

1. Ambient and substrate temperatures shall be between 50 degrees Fahrenheit and 80 degrees Fahrenheit, unless more restrictive limits are recommended by the system manufacturer.
2. If ambient temperature and substrate temperature are outside the specified range, work may only proceed if provisions have been made to ensure that component temperatures are maintained within range specified.
    a. Obtain Engineer's acceptance of provisions to maintain environmental conditions well in advance of on-site installation work.

C. Substrate moisture:
1. The presence of moisture inhibits adhesion of epoxies to substrate.
2. Do not install FRP strengthening system when frost or moisture is present on substrate, or when rainfall or condensation is anticipated in work areas.
3. Before installation, evaluate moisture content in accordance with ASTM D. 4263.

D. Concrete surface primer
1. Remove any remaining dust and debris from surface by hand or with compressed air.
2. Mix constituents in full compliance with the system manufacturer's recommendations.
    a. Pre-condition resin, hardener, and other constituents as recommended by the manufacturer before mixing.
    b. Mix using full units of constituents as packaged by the manufacturer. Do not mix partial batches. Do not separate prepackaged units into smaller volumes for blending partial batches.
    c. Do not dilute constituents or blended product.
    d. Mix only that quantity that can be used within its pot life at the actual on-site ambient and surface temperatures.
3. Apply prime coat in accordance with system manufacturer's instructions.
    a. Use brushes, rollers, or other equipment indicated.
    b. If recommended, apply second coat as necessary after first coat has penetrated into concrete.
    c. If recommended, allow prime coat(s) to cure before installing FRP reinforcement.
        1) Install FRP reinforcement within "open time" recommended by the system manufacturer.
        2) If installation window is exceeded, advise Engineer and obtain system manufacturer's recommended procedures before proceeding with work. Do not proceed with installation until proposed procedures have been accepted by the Engineer.

E. Saturation and installation of fiber reinforcement fabric:
1. General:
    a. Prepare and apply fiber reinforcement fabric in compliance with the system manufacturer's recommendations.
    b. Mix and prepare saturant as specified by the system manufacturer and in the preceding paragraphs for concrete surface primer.
    c. Mix saturant, cut fabrics, and apply saturant to fabric in a protected area and on clean surfaces free from moisture, dust, and other debris.

1) Use saturant within manufacturer's defined resin working time. Discard and properly dispose of batches or portions of batches left over beyond the defined resin working time.

d. Use methods that produce uniform, constant tensile force that is distributed across the entire width of fabric.

e. Take precautions to avoid crimping or otherwise damaging the fibers in reinforcement fabric during handling and installation.

f. Apply reinforcement fabric with fibers oriented in the direction or directions indicated on the Drawings.

g. Confirm that each layer of reinforcement fabric is fully saturated with epoxy, and firmly embedded and adhered to the preceding layer or substrate.

h. Joints. Unless greater dimensions are recommended by the system manufacturer, provide joints between reinforcement fabric sheets as follows:

1) Ends (along the length of the fabric and perpendicular to the direction of fiber orientation): Minimum 6 inches.

2) Edges (along the sides of the fabric and parallel to the direction of fiber orientation): No lap required. Gap between adjacent lines of fabric shall not exceed 1/2 inch.

2. Unless otherwise recommended by the system manufacturer, reinforcement fabric may be applied using “wet lay-up” or “dry lay-up” methods at the discretion of the Contractor.

3. Wet Lay-Up Method. For each layer of reinforcing fabric indicated on the Drawings:

a. Use system manufacturer’s recommended saturator equipment:

1) Set up equipment and calibrate rollers to saturate the fabric at the proper resin-to-fabric ratio.

2) At least daily, have roller gap and calibration checked for accuracy by a qualified technician.

b. Completely saturate fabric before application to contact surface. Ensure complete impregnation:

1) Certified installer shall supervise and check saturation.

2) Apply saturant uniformly at rates in accordance with FRP strengthening system manufacturer’s recommendations.

3) During production, measure epoxy resin usage and fabric usage accurately.

4) Monitor resin usage for compliance with the recommended fiber to epoxy resin ratio. Record usage in the daily project logs at intervals not exceeding 4 hours.

c. Once fabric is saturated, it may be “spooled” or cut to specified lengths and “booked” for handling.

d. Apply saturated fabric to the receiving surface without delay:

1) Carefully place fabric in position, taking care to orient its reinforcing fibers in the direction specified or indicated on the Drawings.

2) Promptly work from one end of the application area to the other.

3) Joints.

4) Using a ribbed roller or squeegee, remove any air entrapped within the fabric or between the fabric and its contact surface.

e. Repeat procedures for each additional layer of reinforcing fabric.

4. Dry Lay-Up Method. For each layer of reinforcing fabric indicated on the Drawings:
   a. In advance of installation, cut reinforcing fiber sheets to prescribed lengths.
   b. Using a roller or other means recommended by the system manufacturer, apply a primary coat of saturant to the primed concrete surface.
   c. Apply dry fabric to the receiving surface within the saturant's open time:
      1) Carefully place fabric in position with fiber side toward the concrete surface. Take care to orient the fabric reinforcing fibers in the direction specified or indicated on the Drawings.
      2) Use a ribbed roller to force fabric into the saturant and to remove any air trapped between the fabric and its contact surface.
      3) Promptly work from one end of the application area to the other.
      4) Joints.
         a) Ends (along the length of the fabric and perpendicular to the direction of fiber orientation): Minimum 6 inches unless otherwise recommended by the system manufacturer.
         b) Edges (along the sides of the fabric and parallel to the direction of fiber orientation): No lap required. Gap between adjacent lines of fabric shall not exceed 1/2 inch.
   d. Allow the primary coat of saturant to soak through the reinforcing fabric for the period recommended by the system manufacturer.
   e. After the recommended period, apply a secondary coat of saturant over the installed fabric to replenish the primary saturant and to fully impregnate the fabric.
   f. Repeat procedures for each additional layer of reinforcing fabric.
5. Edges:
   a. Detail all exposed edges of reinforcement fabric, including termination points, by applying a thickened coat of saturant epoxy.
   b. Finish as specified between 24 hours and 72 hours after final application of epoxy saturant.
   c. If after 72 hours the epoxy is cured, roughen edge surfaces by hand sanding, brush blasting, or other methods acceptable to Engineer as determined by the FRP strengthening system manufacturer prior to finishing.

F. Protection and curing:
   1. Protect finished installation of FRP reinforcement from rain, sand, dust, etc. using protective sheeting or other barriers. Do not allow protective sheeting to come in contact with finished application.
   2. Cure finished application for at least the periods indicated unless a longer curing period is recommended by the system manufacturer:
      a. Maintain surface and ambient temperatures required for installation during the first 48 hours after installation.
      b. Do not apply load to strengthened members until curing has continued for a period of at least 14 days at an average ambient temperature of 68 degrees Fahrenheit.

G. Repair of defects:

1. Upon completion of the curing process, the installed system shall be checked for areas where saturant has not penetrated or where saturant has not completely cured. Such areas shall be epoxy injected to re-establish bond subject to the approval of the Project Engineer.
2. Repair procedures shall be performed in accordance with guidelines established by ACI 440.2R-08 and approved by the Project Engineer. All repairs shall be subject to the same application, curing and quality control specifications as the original work:
   a. Small delaminations and voids less than 2 square inches each are permissible as long as the delaminated area is less than 5% of the total laminate area and there are no more than 10 such delaminations per 10 square feet.
   b. Medium sized delaminations and voids greater than 2 square inches, but less than 25 square inches may be repaired by epoxy resin injection or ply replacement, depending on the size and number of delaminations and their location. The repair procedure should be determined by the Project Engineer.
   c. Larger size delaminations and voids greater than 25 square inches should be repaired by selectively cutting away the affected sheet and applying an overlapping sheet patch of equivalent plies. The overlap should extend a minimum of 6 inches in all directions.

3.05 FIELD QUALITY CONTROL

A. Contractor shall provide quality control over the Work of this Section as required by Section 01450.
   1. Expenses associated with testing described by the following paragraphs shall be borne by the Contractor.

B. Preparation:
   1. As required by ICC-ES AC178, have the following documents available on site prior to commencing installation and until installation is complete. Make documents available to the Engineer or other inspectors upon request.
   2. Copy of submittal(s) as accepted by the Engineer, including:
      a. Manufacturer’s requirements for product handling, storage, conditioning, and disposal.
      b. Manufacturer’s installation instructions.
      c. Manufacturer’s details for anchoring the FRP composite, and for joining the FRP composite to structural elements.
   3. Contractor’s work plan for system installation, curing, and protection.

C. Field inspections:
   1. Record batch numbers of fabric and epoxy used each day, and note locations of installation. Each day, measure square footage of fabric used and volume of epoxy mixed and wasted. Calculate the difference between epoxy mixed and epoxy wasted to demonstrate volume used for the installation.
   2. Monitor mixing of epoxy components for proper ratios and conformance to the FRP strengthening system manufacturer’s recommendations.
   3. Allow at least 24 hours for initial resin cure.

4. With Engineer in attendance, perform a visual and acoustic tap test inspection of layered surface to identify unbounded areas and voids.
   a. Mark delaminations for and voids for repair.
   b. Inject or back fill voids and bubbles up to 2 square inches with epoxy.
   c. For larger voids and delaminations, submit proposed repair method for Engineer's acceptance prior to proceeding with the repair.
5. For each day's installation, prepare and submit record of work, including the following information:
   a. Date and time of installation.
   b. Ambient air temperature, relative humidity, and general weather observations.
   c. Before and during application period:
      1) Surface temperature of concrete substrate.
      2) Surface dryness of substrate in accordance with ACI 503 4.
   d. Surface preparation methods used and resulting profile based on ICRI-surface-profile-chips.
   e. Qualitative description of surface cleanliness.
   f. Type of auxiliary heat source, if used.
   g. Widths of cracks not injected with epoxy.
   h. Fiber batch number(s) and approximate location in structure.
   i. Batch numbers, mixture ratios, mixing times, and qualitative descriptions of appearance of mixed resins, including primers, putties, saturants, adhesives, and coatings mixed for the day.
   j. Observations of progress of curing of resins.
   k. Pull-off test results for bond strength, failure mode, and location.
   l. FRP properties from tests of field sample panels or witness panels, if required.
   m. Location and size of any delaminations or air voids observed in previously placed or current.
   n. General progress of work and notations of any anomalies or irregularities in materials and installation.

D. In-situ field testing:
   1. Provide direct tension adhesion testing of cored samples using method in accordance with ASTM C 1583 for concrete substrate strength, and ASTM D 7522 for strength of FRP bond to concrete substrate:
      a. Perform a minimum of 3 tests for each day of production or for each 500 square feet of FRP application, whichever is less.
      b. Perform tests on flat surfaces adjacent to the area being strengthened whenever possible. Test areas representing each type of substrate or each surface preparation technique used:
         1) If no adjacent areas exist, conduct tests on areas of FRP composite system subjected to relatively low stress during service.
      c. Allow surface of bonded FRP composite system to cure for a minimum of 72 hours before the direct tension pull-off test.
      d. The minimum acceptable result for any single tension test is 175 pounds per square inch. The average of tests at each location shall not be less than 200 pounds per square inch. Additional tests may be performed to qualify the work.

2. Fill test locations with thickened epoxy after values have been recorded and verified by special inspector and test dollies have been removed.

E. Laboratory testing:
1. Provide tension strength testing of epoxy-fiber composite samples prepared and cured at the site.
2. Sampling:
   a. Record:
      1) Lot number of fabric and epoxy resin used
      2) Location of installation.
      3) Label each sample from each day's production.
3. Prepare at least 2 samples for testing during each day's work, or portion thereof.
   a. Each sample shall consist of cured epoxy-fiber composite. Size shall be 12 inches by 12 inches.
4. Sampling:
   a. Take samples at appropriate times during day to ensure the maximum deviation in components and conditions of installation for the FRP composite system.
   b. For each sample record date and time of sampling, approximate location of those materials in the installed work, and lot numbers of fabric and epoxy resin used for the sample and the work.
   c. Sample batch shall consist of two 12 inches by 12 inches samples of cured composite.
5. Preparation of samples:
   a. Prepare samples as described in ICC-ES AC178 and the following paragraphs, unless otherwise recommended by the manufacturer. If alternate procedures are recommended, obtain Engineer's acceptance in advance. Submit to Engineer manufacturer's discussion of reasoning for those procedures, and how test results would be expected to vary from those performed using ICC-ES AC178 procedures.
   b. Prepare sample on smooth, flat, level, surface covered with polyethylene sheeting or 16-mil plastic film. Prime with epoxy resin, place 1 layer of saturated fabric, and apply additional topping of epoxy. Cover with plastic film and use squeegee to force out air bubbles.
   c. Store samples flat in sample box or protected area at the site, exposed to the same environmental conditions as the Work. Do not move samples for minimum of 48 hours after preparation. Mark samples to identify representative location in the Work and date and time of construction.
   d. Give prepared, identified samples to pre-approved and experienced testing laboratory.
6. Tension tests:
   a. In the laboratory, precondition samples for 48 hours at 140 degrees Fahrenheit before testing.
   b. Cut test coupons from samples and test for ultimate tensile strength, tensile modulus, and percentage elongation in accordance with ASTM D 3039 and ASTM D 7565:
      1) Test samples for strength in the longitudinal direction of reinforcing fibers.

c. Test a minimum of 15 percent of all samples in accordance with ICC AC178. If one set of coupons fails to meet average design values, then test the other 12 inches by 12 inches sample from same sample batch. In case this sample also fails (on average), test remaining sample batch for that day and take appropriate remediates to ensure integrity of system at locations from failed sample batch. In addition, test 25 percent of remaining sample batches by same criteria in accordance with ICC AC178.

7. Acceptance Criteria:
   a. FRP tensile values, calculated as mean values determined from the field samples tested in accordance with ASTM D 3039 and ASTM D 7565, shall equal or exceed the properties of the composite system as specified herein.
   b. Mean strength values below those specified and shall be remedied by installing additional layers of fiber reinforcement fabric at the Work.

3.06 FIELD QUALITY ASSURANCE

A. Engineer shall provide on-site observation and field quality assurance for the Work of this Section:
   1. Expenses associated with observations and testing described by the following paragraphs shall be borne by the OWNER.

B. Special Tests and Inspections:
   1. See Section 01455 for general requirements and procedures.
   2. Observe construction for conformance to the Contract Documents and the accepted submittals.
   3. Maintain record of each inspection. Daily special inspection reports shall include at a minimum, those items enumerated in ICC-ES AC178.
   4. Special Inspections:
      a. Conduct special inspections and report findings in accordance with the requirements of ICC-ES AC178.
      b. Observe materials, surface preparation, installation of FRP composite system, and curing.
      c. With Contractor, observe installations for defects and identify areas of non-conforming work for repair.
   5. Special Tests:
      a. Tension property tests, as required by ICC-ES AC178, are required by the preceding paragraphs for Contractor-provided field quality control. Obtain reports of tests from Contractor and confirm compliance of tested materials with the requirements of this Section.

C. Field tests:
   1. Engineer may, at any time, request additional testing to confirm that materials being delivered and placed conform to the requirements of the Specifications.
      a. If such additional testing shows that the materials <u>do not</u> conform to the specified requirements, Contractor shall pay the cost of these tests.
      b. If such additional testing shows that the materials <u>do</u> conform to the specified requirements, OWNER will pay the cost of these tests.

3.07 NON-CONFORMING WORK

A. Conditions of acceptance shall be as stipulated in ICC-ES AC178 unless otherwise recommended by the system manufacturer and confirmed in writing by the manufacturer's authorized representative after his/her on-site observation of conditions, and accepted by the Engineer.

B. Voids and delaminations:
   1. Small entrapped air pockets and voids (up to approximately 1/8-inch in diameter): Repair not required unless specifically recommended by the system manufacturer.
   2. Small voids and delaminations with an area not greater than 2 square inches at each condition: Inject or backfill with epoxy:
      a. Not more than 10 defects of this size shall be allowed in any 10 square feet of laminated area.
   3. Voids and bubbles larger than 2 square inches, or occurring at a rate of more than 10 such defects in any 10 square feet of laminated area: Submit proposed methods of repair for acceptance by the Engineer.
   4. Delaminations at edges or boundaries of reinforced areas: Submit proposed methods of repair for acceptance by the Engineer.

C. Insufficient Material Properties:
   1. If laboratory testing determines sample batch has insufficient material properties, take remedial measures.
   2. For structural members where installed FRP composite system has material properties determined to be below the minimum average specified values, install additional layers until composite thickness in increased by the same percentage as deficiency of material's tensile modulus.
   3. Provide additional remediation recommended by the system manufacturer or required by Engineer.

3.08 CLEANING

A. Leave finished work and work area in neat, clean condition.

B. Remove all surplus material, equipment, and debris.

END OF SECTION

SECTION 03922

PREPACKAGED SMALL AGGREGATE REPAIR CONCRETE

PART 1 GENERAL

1.01 SUMMARY

A. Section includes: Prepackage concrete for the repair of concrete.

B. Use this Section for the following:
   1. Concrete for water-containing structures, including the following areas:
      a. Filtered Pipe Gallery.
      b. Filter Effluent Channel.
      c. Overflow Structure.
      d. Clearwell Approach Channel.
      e. Clearwell.
   2. Concrete for Sodium Bisulfite Facility.
   3. Concrete for Emergency Generator Facility.

C. Related section:
   1. The Contract Documents are complementary; what is called for by one is as binding as if called for by all.
   2. It is the Contractor's responsibility for scheduling and coordinating the Work of subcontractors, suppliers, and other individuals or entities performing or furnishing any of Contractor's Work.
   3. The following Sections are related to the Work described in this Section. This list of Related Sections is provided for convenience only and is not intended to excuse or otherwise diminish the duty of the Contractor to see that the completed Work complies accurately with the Contract Documents.
      a. Section 03300 – Cast-in-Place Concrete.

1.02 REFERENCES

A. ASTM International (ASTM):
   1. C 33 – Specification for Concrete Aggregates.
   2. C 39 – Test Method for Compressive Strength of Cylindrical Concrete Specimens.
   3. C 150 – Specifications for Portland Cement.

1.03 SUBMITTALS

A. Product Data.

B. Manufacturer's Instructions.

1.04 DELIVERY, STORAGE, AND HANDLING

A. Store in unopened containers in clean, dry area with temperature between 45 and 90 degrees.

PART 2 PRODUCTS

2.01 PREPACKAGED CONCRETE

A. Coarse aggregate: 3/8 inch aggregate in accordance with ASTM C 33.

B. Portland cement: Type I or II in accordance with ASTM C 150.

C. Compressive strength: 5,000 pounds per square inch at 28 days minimum, in accordance with ASTM C 39.

D. Packaged in multi-wall bags.

E. Manufacturers: One of the following or equal:
   1. BASF, MasterPatch 240 CR.
   2. Sika, Sikacrete 211.

PART 3 EXECUTION

3.01 INSTALLATION

A. Slump range: 4 to 6 inches.

B. Mix in accordance with manufacturer’s instructions.

C. Water for mixing: As specified in Section 03300.

D. Water cure concrete repair area as specified in Section 03300.

END OF SECTION

SECTION 03931

EPOXY INJECTION SYSTEM

PART 1 GENERAL

1.01 SUMMARY

A. Section includes: Epoxy injection system.

B. Use this Section for the following:
   1. Concrete for water-containing structures, including the following areas:
      a. Filtered Pipe Gallery.
      b. Filter Effluent Channel.
      c. Overflow Structure.
      d. Clearwell Approach Channel.
      e. Clearwell.
   2. Concrete for Sodium Bisulfite Facility.
   3. Concrete for Emergency Generator Facility.

1.02 REFERENCES

A. ASTM International (ASTM):
   1. D 638 – Standard Test Method for Tensile Properties of Plastics.
   2. D 695 – Standard Test Method for Compressive Properties of Rigid Plastics.
   3. D 790 – Standard Test Methods for Flexural Properties of Unreinforced and Reinforced Plastics and Electrical Insulating Materials.

B. NSF International (NSF)
   1. 61 - Drinking Water System Components - Health Effects.

1.03 SUBMITTALS

A. Product data:
   1. Submit manufacturer's data completely describing epoxy injection system materials.
   2. Epoxy resins installed at location in direct contact with potable water or with process water in treatment: Evidence of compliance with NSF-61 requirements.

B. Quality control submittals:
   1. Certificates of Compliance.
   2. Manufacturer's Instructions.

PART 2 PRODUCTS

2.01 MATERIALS

A. General: For materials installed at locations in direct contact with potable water or process water in treatment: Listed as acceptable under NSF 61 based on testing by a recognized national laboratory acceptable to the Engineer.

B. Manufacturers: One of the following or equal:
   1. BASF, Concressive Standard LVI.
   2. Sika Chemical Corp., Sikadur 35 Hi-Mod LV.

C. Epoxy:
   1. Use epoxy materials that are new and use them within shelf-life limitations set forth by manufacturer.
   2. Water-insensitive 2-part type low viscosity epoxy adhesive material containing 100 percent solids and meeting or exceeding following characteristics when tested in accordance with standards specified:

Physical Characteristic	Test Method	Required Results
Tensile Strength	ASTM D 638	8,000 pounds per square inch at 14 days.
Flexure Strength	ASTM D 790	11,000 pounds per square inch at 14 days.
Compressive Strength	ASTM D 695	11,000 pounds per square inch at 24 hours.
Bond Strength	--	Concrete shall fail before failure of epoxy.
Gel Time for 5 Mil Film	--	4 hours maximum.
Elongation	ASTM D 638	1 percent minimum at 14 days.

2.02 EQUIPMENT

A. Injection pump:
   1. Use positive displacement injection pump with interlock to provide in-line mixing and metering system for 2 component epoxy.
   2. Use pressure hoses and injection nozzle designed to properly mix of 2 components of epoxy.
   3. Standby injection unit may be required.

PART 3 EXECUTION

3.01 PREPARATION

A. Surface preparation:
   1. Sweep or clean area in vicinity of cracks that will be injected with epoxy. Leave area in generally clean condition after epoxy injection is complete.
   2. Clean cracks so they are free from dirt, laitance, and other loose matter.

3.02 INSTALLATION

A. Install and cure epoxy materials in accordance with manufacturer's installation instructions.

B. Mix epoxy in accordance with manufacturer's installation instructions.

C. Do not use solvents to thin epoxy.

D. Crack injection:
   1. Apply adequate surface seal to crack to prevent leakage of epoxy.
   2. Establish injection points at distance along crack not less than thickness of cracked member.
   3. Crack injection sequence:
      a. Inject epoxy into crack at first port with sufficient pressure to advance epoxy to adjacent port.
      b. Seal original port and shift injection to port where epoxy appears.
      c. Continue port-to-port injection until crack has been injected for its entire length.
      d. For small amounts of epoxy, or where excessive pressure developed by injection pump might further damage structure, premixed epoxy and use hand caulking gun to inject epoxy if acceptable to the Engineer.
      e. Seal ports, including adjacent locations where epoxy seepage occurs, as necessary to prevent drips or run out.
      f. After epoxy injection is complete, remove surface seal material, and refinish concrete in area where epoxy was injected to match existing concrete.

END OF SECTION

SECTION 03933

HYDROPHOBIC FOAM POLYURETHANE RESIN INJECTION SYSTEM

PART 1 GENERAL

1.01 SUMMARY

A. Section includes: Hydrophobic foam polyurethane resin injection system.

B. Use this Section for the following:
   1. Concrete for water-containing structures, including the following areas:
      a. Filtered Pipe Gallery.
      b. Filter Effluent Channel.
      c. Overflow Structure.
      d. Clearwell Approach Channel.
      e. Clearwell.
   2. Concrete for Sodium Bisulfite Facility.
   3. Concrete for Emergency Generator Facility.

1.02 REFERENCES

A. ASTM International (ASTM):
   1. D 93 – Standard Test Methods for Flash Point by Pensky-Martens Closed Cup Tester.
   2. D 638 – Standard Test Method for Tensile Properties of Plastic.
   3. D 1010 – Methods of Testing Asphalt Emulsions for Use as Protective Coatings for Metal
   4. D 1042 – Standard Test Method for Linear Dimensional Changes of Plastics Caused by Exposure to Heat and Moisture
   5. D 1638 – Methods of Testing Urethane Foam Isocyanate Raw Materials.
   6. D 3574 – Standard Test Methods for Flexible Cellular Materials-Slab, Bonded, and Molded Urethane Foams

B. NSF International (NSF):
   1. 61 – Drinking Water System Components – Health Effects.

1.03 SUBMITTALS

A. Product data: Submit manufacturer's data completely describing polyurethane resin injection system materials.

B. Quality control submittals:
   1. Certificates of Compliance.
   2. Manufacturer's Instructions.

PART 2 PRODUCTS

2.01 MATERIALS

A. Manufacturers: One of the following or equal:
   1. BASF Construction Chemicals, LLC, MasterInject 1230 IUG.
   2. SealBoss Corp., 1510 Water Stop Foam.
   3. Sika Corp., SikaFix HH+.

B. Resin: Provide polyurethane resin materials that are new and use them within shelf life limitations set forth by manufacturer.
   1. Polyurethane resin used in contact with potable water supply systems shall be certified to NSF 61.
   2. Water-insensitive 1 part type low viscosity polyurethane resin adhesive material containing 100 percent solids and meeting or exceeding following characteristics when tested in accordance with standards specified:
      a. Uncured:

Physical Characteristic	Test Method	Required Results
Solids Content	ASTM D 1010	100 percent
Viscosity	ASTM D 638	450 – 700 CPS depending on temp
Color	---	Amber (visual)
Weight per gallon	ASTM D 1638	9.15 pounds
Flash Point	ASTM D 93	Greater than 200 degrees Fahrenheit
Corrosiveness	---	Non-corrosive

      b. Cured foam (1:1):

Physical Characteristic	Test Method	Required Results
Tensile Strength	ASTM D 638	29 pounds per square inch with 1 day cure
Elongation	ASTM D 3574	20 percent with 1 day cure
Shrinkage	ASTM D 1042	4 percent linear shrinkage

2.02 EQUIPMENT

A. Pump unit:
   1. Furnish unit to be used for injection that is positive displacement type with interlock to provide in-line mixing and metering system for 1 component polyurethane resin.
   2. Furnish pressure hoses and injection nozzle of such design as to allow proper mixing of polyurethane resin.
   3. Standby injection unit may be required.

B. Resin pump: Operating pressure in excess of 2,000 pounds per square inch with a variable pressure control trigger mechanism with attached pressure gauge, on the downstream end of the material supply hose.

C. Water pump: High-pressure water blaster capable of 1,000 pounds per square inch or higher pressure.

D. Incidentals: To be determined by site conditions and Contractor. See Installation Bulletin 6I12 – Urethane Injection, from BASF Construction Chemicals, LLC.

PART 3 EXECUTION

3.01 INSPECTION

A. The Drawings indicate lengths of crack injection anticipated for repairs at various areas of the Work.
   1. Actual cracks and joints designated for injection will be marked in the field by the Engineer.
   2. Attend on-site meetings to locate and agree on locations and extent of injection before commencing work. Attendees shall include Contractor and key personnel from any subcontractors performing the injection.

3.02 PREPARATION

A. General: Before proceeding, sweep or clean area in vicinity of crack location to receive polyurethane resin and leave in generally clean condition.

B. Joints to receive polyurethane resin: Clean joints free from dirt, laitance, and other loose matter.

3.03 INSTALLATION

A. Install and cure polyurethane resin materials in accordance with manufacturer's installation instructions.

B. Perform and conduct work of this Section in neat orderly manner.

C. Polyurethane resin injection system:
   1. Apply adequate surface seal to crack to prevent escape of polyurethane resin.
   2. Establish entry points at distance along seal not less than thickness of cracked member.
   3. Force polyurethane resin into crack at first port with sufficient pressure to advance polyurethane resin to adjacent port.
   4. Seal original port and shift entry to port at which polyurethane resin appears.
   5. Continue in this manner of port-to-port injection until each crack has been injected for its entire length.
   6. For small amounts, or where excessive grout pressure developed by pump unit might further damage structure, premixed material and hand caulking gun may be used if acceptable to the Engineer.

7. Seal ports, including adjacent locations where polyurethane resin seepage occurs, as necessary to prevent drips or run out.

END OF SECTION

SECTION 05120

STRUCTURAL STEEL

PART 1 GENERAL

1.01 SUMMARY

A. Section includes:
   1. Structural steel shapes and plate.
   2. Fasteners and structural hardware:
      a. All thread rods.
      b. High-strength bolts.
   3. Welding.
   4. Bolting.

B. Related sections:
   1. Section 03055 – Epoxy Bonding Reinforcing Bars and All Thread Rods.
   2. Section 09901 – Protective Coatings.

1.02 REFERENCES

A. American Institute of Steel Construction (AISC):
   1. 303 – Code of Standard Practice for Steel Buildings and Bridges.
   2. 360 – Specification for Structural Steel Buildings.

B. American Iron and Steel Institute (AISI):
   1. Steel and stainless steel alloys (“types”) as indicated.

C. American Welding Society (AWS):
   1. A5.1 – Specification for Carbon Steel Electrodes for Shielded Metal Arc Welding.
   2. A5.17 – Specification for Carbon Steel Electrodes and Fluxes for Submerged Arc Welding.
   3. A5.20 – Specification for Carbon Steel Electrodes for Flux Cored Arc Welding.
   4. D1.1 – Structural Welding Code – Steel.
   5. D1.6 – Structural Welding Code – Stainless Steel.

D. ASTM International (ASTM):
   1. A6 – Standard Specification for General Requirements for Rolled Structural Steel Bars, Plates, Shapes, and Sheet Piling.
   2. A36 – Standard Specification for Carbon Structural Steel.
   3. A53 – Standard Specification for Pipe, Steel, Black and Hot-Dipped, Zinc-Coated, Welded, and Seamless.
   4. A123 – Standard Specification for Zinc (Hot-Dip Galvanized) Coatings on Iron and Steel Products.
   5. A153 – Standard Specification for Zinc Coating (Hot-Dip) on Iron and Steel Hardware.

6. A194 – Standard Specification for Carbon and Alloy Steel Nuts for Bolts for High Pressure or High Temperature Service, or Both.
7. A240 – Standard Specification for Chromium and Chromium-Nickel Stainless Steel Plate, Sheet, and Strip for Pressure Vessels and for General Applications.
8. A276 – Standard Specification for Stainless Steel Bars and Shapes.
9. A325 – Standard Specification for Structural Bolts, Steel, Heat Treated, 120/105 ksi Minimum Tensile Strength.
10. A380 – Standard Practice for Cleaning, Descaling, and Passivation of Stainless Steel Parts, Equipment, and Systems.
11. A500 – Standard Specification for Cold-Formed Welded and Seamless Carbon Steel Structural Tubing in Rounds and Shapes.
12. A501 – Standard Specification for Hot-Formed Welded and Seamless Carbon Steel Structural Tubing.
13. A563 – Standard Specification for Carbon and Alloy Steel Nuts.
14. A992 – Standard Specification for Structural Steel Shapes.
15. F436 – Standard Specification for Hardened Steel Washers.
16. F959 – Standard Specification for Compressible-Washer-Type Direct Tension Indicators for Use with Structural Fasteners.
17. F593 – Standard Specification for Stainless Steel Bolts, Hex Cap Screws, and Studs.
18. F594 – Standard Specification for Stainless Steel Nuts.
19. F2329 – Standard Specification for Zinc Coating, Hot-Dip, Requirements for Application to Carbon and Alloy Steel Bolts, Screws, Washers, Nuts, and Special Threaded Fasteners.

E. Research Council on Structural Connections (RCSC):
1. Specification for Structural Joints Using High-Strength Bolts (RCSC Specification).

1.03 DEFINITIONS

A. Snug-tight: At bolted joints, the tightness attained with a few impacts of an impact wrench, or by the full effort of an ironworker using a spud wrench to bring the connected plies into firm contact.

B. Stainless steel related terms:
1. Descaling: Removal of heavy, tightly adherent oxide films resulting from hot-forming, heat-treatment, welding, and other high-temperature operations.
2. Pickling: Chemical descaling of stainless steel using aqueous solutions of nitric and hydrofluoric acid, or various proprietary formulations as specified.
3. Passivation: Chemical treatment of stainless steel with a mild oxidant for the purpose of enhancing the spontaneous formation of the steel's protective passive film.

1.04 SUBMITTALS

A. Product data:
1. Stainless steel: Fabricator name and qualifications, and specifications and procedures used for pickling and passivating members.

B. Quality control submittals:
   1. Submit shop drawings of members to be fabricated before starting fabrication.
   2. Welder's certificates.
   3. Submit steel fabricator's AISC certification.

C. Test reports:
   1. Certified copies of mill tests and analyses made in accordance with applicable ASTM standards, or reports from a recognized commercial laboratory, including chemical and tensile properties of each shipment of structural steel or part thereof having common properties.

1.05 QUALITY ASSURANCE

A. Qualifications:
   1. Perform welding of structural metals with welders who have current AWS certificate for the type of welding to be performed.
   2. Steel fabricators shall be certified by the AISC or other certification as recognized and accepted by the local building official having jurisdiction.
   3. Notify Engineer 24 hours minimum before starting shop or field welding.
   4. Engineer may check materials, equipment, and qualifications of welders.
   5. Remove welders performing unsatisfactory Work, or require to requalification.
   6. Engineer may use gamma ray, magnetic particle, dye penetrant, trepanning, or other aids to visual inspection to examine any part of welds or all welds.
   7. Contractor shall bear costs of retests on defective welds.
   8. Contractor shall also bear costs in connection with qualifying welders.

B. Certification:
   1. Steel fabricators shall be certified by the AISC or other certification acceptable to the local building official having jurisdiction.

1.06 DELIVERY, STORAGE, AND HANDLING

A. Packing and shipping: Deliver structural steel free from mill scale, rust, and pitting.

B. Storage and protection: Until erection and painting, protect from weather items not galvanized or protected by a shop coat of paint.

PART 2 PRODUCTS

2.01 MATERIALS

A. Unless otherwise specified or indicated on the Drawings, materials shall conform to the following:

Item	ASTM Standard	Class, Grade, Type, or Alloy Number
Steel		
Plate, bars, rolled shapes (except W and WT shapes), and miscellaneous items	A36	--
Rolled W and WT shapes	A992	Grade 50
Hollow structural sections (HSS): Round, square, or rectangular	A500	Grade B
Round HSS	A500	Grade B
Steel pipe	A53	Grade B
Stainless steel		
Plate, sheet, and strip	A240	Type 304* or 316**
Bars and shapes	A276	Type 304* or 316**
* Use Type 304L if material will be welded. ** Use Type 316L if material will be welded.		

B. Where stainless steel is welded, use low-carbon stainless steel.

2.02 FASTENERS AND STRUCTURAL HARDWARE

A. General:
   1. Materials: Of domestic manufacture.
   2. Where fasteners and hardware are specified to be galvanized, galvanize in accordance with ASTM A153 or ASTM F2329.

B. All thread rods:
   1. Uncoated
      a. In accordance with ASTM A36 unless otherwise indicated on the Drawings.
      b. Nuts: ASTM A194.
      c. Washers: ASTM F436.
   2. Galvanized:
      a. In accordance with ASTM A36 unless otherwise indicated on the Drawings, and hot dip galvanized in accordance with ASTM A153.
      b. Nuts: ASTM A194, hot-dip galvanized in accordance with ASTM A153.
      c. Washers: ASTM F436, hot-dip galvanized in accordance with ASTM A153.
   3. Stainless steel:
      a. Units descaled, pickled, and passivated as specified in “Fabrication” in this Section.

b. Threaded rods and nuts to be the products of a single manufacturer/fabricator to ensure proper fit without galling. Ship all thread rods with properly fitting nuts attached.
c. Alloy Type 304 or Type 316 as indicated on the Drawings.
d. Type 304:
1) Rod: ASTM F593, Group 1, Condition CW, coarse threads.
2) Nuts: ASTM F594. Match alloy of rod (group and UNS designation).
3) Washers: Type 304 stainless steel.
e. Type 316:
1) Rod: ASTM F593, Group 2, Condition CW, coarse threads.
2) Nuts: ASTM F594. Match alloy of rod (group and UNS designation).
3) Washers: Type 316 stainless steel.

C. High-strength bolts:
1. Provide high-strength bolt assembly, with nuts, hardened flat washers, and compressible-washer-type direct tension indicators
2. Uncoated:
a. Bolts: Plain heavy hex structural bolts in accordance with ASTM A325 Type 1**.**
b. Nuts: Heavy hex nuts in accordance with ASTM A563, Grade C.
c. Washers: Flat:
1) Adjacent to normal, oversized, and short-slotted holes: Circular and square or rectangular beveled washers in accordance with ASTM F436.
2) Adjacent to long slotted holes: 5/16-inch thick plate washer fabricated from steel in accordance with ASTM A36.
d. Washers: Tension indicating: In accordance with ASTM F959.

D. Stainless steel bolts (for use in stainless steel structures):
1. General:
a. Bolts and nuts shall be the products of a single manufacturer/fabricator to ensure proper fit without galling. Ship bolts with properly fitting nuts attached.
b. Units descaled, pickled and passivated as specified in “Fabrication."
2. Alloy: Type 304 or Type 316 to match alloy of structural members being connected.
3. Type 304:
a. Bolts: ASTM F593, Group 1, Condition CW, coarse threads.
b. Nuts: ASTM F594. Match alloy (group and UNS designation) and threads of bolts.
c. Washers: Type 304 stainless steel.
4. Type 316:
a. Bolts: ASTM F593, Group 2, Condition CW, coarse threads.
b. Nuts: ASTM F594. Match alloy (group and UNS designation) and threads of bolts.
c. Washers: Type 316 stainless steel.

2.03 ISOLATING SLEEVES AND WASHERS

A. As indicated on the Drawings and as specified in Section 05500.

2.04 GALVANIZED SURFACE REPAIR

A. Manufacturers: One of the following or approved equal:
   1. Galvinox.
   2. Galvo-Weld.

2.05 THREAD COATING

A. Manufacturers: One of the following or approved equal:
   1. Never Seez Compound Corporation, Never-Seez.
   2. Oil Research, Inc., WLR No. 111.

2.06 SUPPLEMENTARY PARTS

A. Furnish as required for complete structural steel erection, whether or not such parts and Work are specified or indicated on the Drawings.

2.07 FABRICATION

A. Shop assembly:
   1. Fabricate structural steel in accordance with AISC 360 and AISC 303 unless otherwise specified or modified by applicable regulatory requirements.
   2. Where anchors, connections, or other details of structural steel are not specifically indicated on the Drawings or specified, their material, size and form shall be equivalent in quality and workmanship to items specified.
   3. Round off sharp and hazardous projections and grind smooth.
   4. Take measurements necessary to properly fit work in the field. Take responsibility for and be governed by the measurements and proper working out of all the details.
   5. Take responsibility for correct fitting of all metalwork.

B. Stainless steel shapes and assemblies:
   1. For structural members such as W shapes, S shapes, channels, angles, and similar rolled shapes not available in quantity, size, and type of stainless steel specified or indicated on the Drawings:
      a. Fabricate shapes using laser-fused, full penetration welds between pieces of plate to attain same or higher section modulus and moment of inertia as that of members indicated on the Drawings.
      b. Fabricate shapes from dual grade stainless steel.
      c. Fabricate beams and channels to ASTM A6 tolerances.
      d. Manufacturers: The following, or equal:
         1) Stainless Structurals, LLC, Jacksonville, FL.
   2. Cleaning and passivation:
      a. Following shop fabrication of stainless steel members and bolts, clean and passivate fabrications at point of manufacture.
      b. Finish requirements: Remove free iron, heat tint oxides, weld scale and other impurities, and obtain a bright passive finished surface with no etching, pitting, frosting, or discoloration.

c. Provide quality control testing to verify effectiveness of cleaning agents and procedures and to confirm that finished surfaces are clean and passivated.
   1) Conduct sample runs using test specimens with proposed cleaning agents and procedures as required to avoid adverse effects on surface finishes and base materials.
d. Pre-clean, chemically de-scale ("pickle"), passivate, and final-clean fabrications in accordance with the requirements of ASTM A380.
   1) If degreasing is required before cleaning (pickling) to remove scale or iron oxide, cleaning with citric acid treatments is permissible; however, such treatments shall be followed inorganic cleaners.
   2) Pickle and passivate stainless steel using a nitric acid solution in accordance with ASTM A380, Annex A2, Table A2.1, Part II.
   3) Pickling by citric acid treatment or sulfuric acid treatment is not considered to satisfy the requirements of this Section.
e. Inspect after cleaning using methods specified for "gross inspection" in ASTM A380.
f. Improperly or poorly cleaned and passivated materials shall not be shipped and will not be accepted at the site.

C. Galvanized steel:
   1. Where galvanizing is required, hot-dip structural steel after fabrication in accordance with ASTM A123:
   2. Do not electro-galvanize or mechanically-galvanize unless specified or accepted by Engineer.
   3. Re-straighten galvanized items that bend or twist during galvanizing.

PART 3 EXECUTION

3.01 EXAMINATION

A. Verification of conditions: Examine Work in place to verify that it is satisfactory to receive the Work of this Section. If unsatisfactory conditions exist, do not begin this Work until such conditions have been corrected.

3.02 ERECTION

A. General:
   1. Fabricate structural and foundry items to true dimensions without warp or twist.
   2. Form welded closures neatly, and grind off smooth where weld material interferes with fit or is unsightly.
   3. Install structural items accurately and securely, true to level, plumb, in correct alignment and grade, with all parts bearing or fitting structure or equipment for which intended.
   4. Do not cock out of alignment, re-drill, re-shape, or force fit fabricated items.
   5. Place anchor bolts or other anchoring devices accurately and make surfaces that bear against structural items smooth and level.

6. Rigidly support and brace structural items needing special alignment to preserve straight, level, even, and smooth lines. Keep structural items braced until concrete, grout, or dry pack mortar has hardened for 48 hours minimum.
7. Erect structural steel in accordance with AISC 360 unless otherwise specified or modified by applicable regulatory requirements.
8. Where anchors, connections, and other details of structural steel erection are not specifically indicated on the Drawings or specified, form, locate, and attach with equivalent in quality and workmanship to items specified.
9. Round off sharp or hazardous projections and grind smooth.
10. Paint or coat steel items as specified in Section 09901.

B. Stainless steel. Take all necessary precautions to avoid iron contamination of stainless steel during delivery, storage, and handling.
   1. Segregate stainless steel from iron.
   2. Tools and handling devices.
      a. Do not use iron tools clamps, chokes, working surfaces, or brushes when fabricating, handling, and erecting stainless steel.
      b. Do not use tools that have been contaminated by contact with iron.
      c. Use stainless steel, polymer coated, or wood tools and handling equipment. Do not use tools that have been contaminated by contact with iron or steel.

C. Welding: General:
   1. Make welds full penetration type, unless otherwise indicated on the Drawings.
   2. Remove backing bars and weld tabs after completion of weld. Repair defective welds observed after removal of backing bars and weld tabs.

D. Welding stainless steel:
   1. General: In accordance with AWS D1.6.

E. Welding carbon steel:
   1. General: In accordance with AWS D1.1:
      a. Weld ASTM A36 and A992 structural steel, ASTM A500 and A501 structural tubing, and ASTM A53 pipe with electrodes in accordance with AWS A5.1, using E70XX electrodes; AWS A5.17, using F7X-EXXX electrodes; or AWS A5.20, using E7XT-X electrodes:
      b. Field repair cut or otherwise damaged galvanized surfaces to equivalent original condition using a galvanized surface repair.

F. Interface with other products:
   1. Where steel members and fasteners come in contact with dissimilar metals (aluminum, stainless steel, etc.), separate or isolate the dissimilar metals with isolating sleeves and washers as specified in Section 05500.

G. Fasteners: General:
   1. Install bolts to project 2 threads minimum, but 1/2 inch maximum beyond nut.
   2. All thread rods in drilled holes and bonded to concrete with epoxy: Install as specified in Section 03055.

H. Fasteners: High-strength bolts:
   1. Connections with high-strength bolts shall in accordance with RCSC Specification for Structural Joints Using High-Strength Bolts.
   2. Joints: Slip-critical.
      a. Confirm that faying surfaces at connections are free of dirt and other foreign material, have been blast cleaned, and are free of coatings and inadvertent overspray in accordance with RCSC Specification.
      b. Furnish hardened flat washers in accordance with ASTM F436:
         1) On outer plies with slotted holes.
         2) When 1 or more plies of the connected material has a yield strength less than 40 ksi.
         3) Under element, nut, or bolt head, turned in tightening.
      c. Install tension indicator washers, placed in accordance with ASTM F959 Figure X1, to confirm adequate tightening of bolts.
      d. Tighten bolts to full pretension.

A. Fasteners: Stainless steel bolts:
   1. Connections shall be snug-tight joints unless otherwise indicated on the Drawings.
   2. Prior to installing nuts, coat threads of stainless steel fasteners with thread coating to prevent galling of threads.
   3. Rotate nuts using a slow, smooth action without interruptions. Avoid over-tightening.

END OF SECTION

SECTION 05140

STRUCTURAL ALUMINUM

PART 1 GENERAL

1.01 SUMMARY

A. Section includes: Structural aluminum products, including sheet, pipe, extrusions, and associated accessories.

B. Related Sections:
1. The Contract Documents are complementary; what is called for by one is as binding as if called for by all.
2. It is the Contractor's responsibility for scheduling and coordinating the Work of subcontractors, suppliers, and other individuals or entities performing or furnishing any of Contractor's Work.
3. The following Sections are related to the Work described in this Section. This list of Related Sections is provided for convenience only and is not intended to excuse or otherwise diminish the duty of the Contractor to see that the completed Work complies accurately with the Contract Documents.
   a. Section 09901 – Protective Coatings.

1.02 REFERENCES

A. ASTM International (ASTM):
1. B 209 – Standard Specification for Aluminum and Aluminum-Alloy Sheet and Plate.
2. B 221 – Standard Specification for Aluminum and Aluminum-Alloy Extruded Bars, Rods, Wire, Profiles, and Tubes.
3. B 308 – Standard Specification for Aluminum-Alloy 6061-T6 Standard Structural Profiles.

B. American Welding Society (AWS):
1. A5.10 – Specification for Bare Aluminum and Aluminum-Alloy Welding Electrodes and Rods.
2. D1.2 – Structural Welding Code – Aluminum.

1.03 SUBMITTALS

A. Quality control submittals:
1. Test Reports: Certified copies of mill tests or reports from a recognized commercial laboratory including chemical and tensile properties of each shipment of structural metal or part thereof having common properties. Tests and analyses shall be made in accordance with applicable ASTM Standards.
2. Welder's certificates.

1.04 QUALITY ASSURANCE

A. Qualifications:
   1. Perform welding of structural metals with welders who have current AWS certificate for the type of welding to be performed.
   2. Notify Engineer 24 hours minimum before starting shop or field welding.
   3. Engineer may check materials, equipment, and qualifications of welders.
   4. Remove welders performing unsatisfactory work, or require to requalify.
   5. Engineer may use gamma ray, magnetic particle dye penetrant, or other aids to visual inspection to examine any part of welds or all welds.
   6. Contractor shall bear costs of retests on defective welds.
   7. Contractor shall bear costs in connection with qualifying welders.

PART 2 PRODUCTS

2.01 MATERIALS

A. Structural sheet aluminum: ASTM B 209, Alloy 6061-T6.

B. Structural aluminum: ASTM B 308, Alloy 6061-T6.

C. Extruded aluminum: ASTM B 221, Alloy 6063-T42.

D. Isolating sleeves and washers:
   1. As indicated on the Drawings and as specified in Section 05500.

E. Miscellaneous materials:
   1. Furnish supplementary parts necessary to complete each item even where such work is neither definitely indicated on the Drawings nor specified.
   2. Size, form, attachment, and location shall conform to the best of current practice.
   3. Conform to applicable ASTM Standards for materials not otherwise specified.

2.02 FABRICATION

A. Aluminum layout:
   1. Center punch hole centers, and punch or scribe cutoff lines, except where marks would remain on fabricated material.
   2. Apply temperature correction where necessary in layout of critical dimensions. Use a coefficient of expansion of 0.000013 per degree of Fahrenheit.

B. Cutting aluminum:
   1. Material 1/2-inch thick or less: Shear, saw, or cut with a router.
   2. Material more than 1/2-inch thick: Saw or rout.
   3. Make cut edges true and smooth, free from excessive burrs or ragged breaks.
   4. Avoid reentrant cuts wherever possible. Where used, fillet by drilling prior to cutting.
   5. Do not flame cut aluminum alloys.

6. Punch or drill rivet or bolt holes to finished size before assembly:
   a. Make finished diameter of holes for bolts 1/16-inch maximum larger than nominal bolt diameter.
   b. Make holes cylindrical and perpendicular to principal surface.
   c. Do not permit holes to drift in a manner to distort metal.

C. Aluminum forming and assembly:
1. Do not heat structural aluminum, except as follows:
   a. Heat aluminum to 400 degrees Fahrenheit for 30 minutes maximum, to facilitate bending or welding.
   b. Heat only when proper temperature controls and supervision can ensure that limitations on temperature and time are observed.

D. Before assembly, remove chips lodged between contacting surfaces.

E. Welding aluminum:
1. Perform welding of aluminum in accordance with AWS D1.2.
2. Weld aluminum in accordance with the following:
   a. Preparation:
      1) Remove dirt, grease, forming or machining lubricants, and organic materials from areas to be welded by cleaning with a suitable solvent or by vapor degreasing.
      2) Additionally, etch or scratch brush to remove oxide coating just prior to welding when inert gas tungsten arc welding method is used.
      3) Oxide coating may not need to be removed if welding is performed by automatic or semi-automatic inert gas shielded metal arc.
      4) Suitably prepare edges to assure 100 percent penetration in butt welds by sawing, chipping, machining, or shearing. Do not cut with oxygen.
   b. Filler metal: Aluminum alloys conforming to the requirements of AWS A5.10 and AWS classification ER 4043, ER 5654, ER 5554, ER 5183, ER 5356, or ER 5556.
   c. Perform welding of structures which are to be anodized using filler alloys which will not discolor when anodized, AWS ER 5654, ER 5554, ER 5183, ER 5356, or ER 5556.
   d. Perform welding by using a non-consumable tungsten electrode with filler metal in an inert gas atmosphere (TIG) or using a consumable filler metal electrode in an inert gas atmosphere (MIG).
   e. Do not use welding process that requires use of a welding flux.
   f. Neatly make welded closures.
   g. Where weld material interferes with fit or is unsightly in appearance, grind it smooth.
   h. Make welds full penetration welds unless otherwise indicated on the Drawings.

PART 3 EXECUTION

3.01 EXAMINATION

A. Verification of conditions: Examine Work in place to verify that it is satisfactory to receive the Work of this Section. If unsatisfactory conditions exist, do not begin this Work until such conditions have been corrected.

3.02 INSTALLATION

A. Install structural aluminum products as indicated on the Drawings and specified.

B. Install structural aluminum products accurately and securely, true to level, plumb, in correct alignment and grade, with all parts bearing or fitting structure or equipment for which intended.

C. Do not cock out of alignment, redrill, reshape, or force fit fabricated items.

D. Place anchor bolts or other anchoring devices accurately and make surfaces which bear against structural items smooth and true to level.

E. Rigidly support and brace structural products needing special alignment to preserve straight, level, even, smooth lines, and keep braced until concrete, grout, or dry pack mortar has hardened for a minimum 48-hour period.

F. Interface with other products:
   1. Where aluminum comes in contact with dissimilar metals, use stainless steel bolts or anchors and separate or isolate the dissimilar metals with isolating sleeves and washers as specified in Section 05500.
   2. Coat those parts of aluminum which will be cast into concrete or which will be in contact with concrete, grout, masonry, wood, or other materials that will cause the aluminum to corrode, as specified in Section 09901.

END OF SECTION

SECTION 05500

METAL ASSEMBLIES

PART 1 GENERAL

1.01 SUMMARY

A. Section includes:
1. Aluminum grating stair tread.
2. Concrete inserts.
3. Handrails and guardrails.
4. Manhole frames and covers.
5. Metal gratings.
6. Preformed channel pipe supports.
7. Stairs.
8. Miscellaneous metals.
9. Associated accessories to the above items.

B. Related sections:
1. Section 02084 – Frames, Grates, Rings, and Covers
2. Section 09901 – Protective Coatings.
3. Section 15061 – Pipe Supports.

1.02 REFERENCES

A. Aluminum Association (AA):
1. DAF-45: Designations from Start to Finish.
   a. M12-C22-A41.

B. American Association of State Highway and Transportation Officials (AASHTO):
1. Standard Specifications for Highway Bridges.

C. ASTM International (ASTM):
1. A 36 – Standard Specification for Carbon Structural Steel.
2. A 48 – Standard Specification for Gray Iron Castings.
3. A 53 – Standard Specification for Pipe, Steel, Black and Hot-Dipped, Zinc-Coated, Welded, and Seamless.
4. A 123 – Standard Specification for Zinc (Hot-Dip Galvanized) Coatings on Iron and Steel Products.
5. A 240 – Standard Specification for Chromium and Chromium-Nickel Stainless Steel Plate, Sheet, and Strip for Pressure Vessels for General Applications.
6. A 276 – Standard Specification for Stainless Steel Bars and Shapes.
7. A 307 – Standard Specification for Carbon Steel Bolts and Studs, 60,000 PSI Tensile Strength.
8. A 325 – Standard Specification for Structural Bolts, Steel, Heat Treated, 120/105 ksi Minimum Tensile Strength.

9. A 380 – Standard Practice for Cleaning, Descaling, and Passivation of Stainless Steel Parts, Equipment, and Systems.
10. A 489 – Standard Specification for Carbon Steel Lifting Eyes.
11. A 490 – Standard Specification for Structural Bolts, Alloy Steel, Heat-Treated , 150 ksi Minimum Tensile Strength.
12. A 500 – Standard Specification for Cold-Formed Welded and Seamless Carbon Steel Structural Tubing in Rounds and Shapes.
13. A 501 – Standard Specification for Hot-Formed Welded and Seamless Carbon Steel Structural Tubing.
14. A 635 – Standard Specification for Steel, Sheet and Strip, Heavy-Thickness Coils, Hot-Rolled, Alloy, Carbon, Structural, High-Strength Low-Alloy, and High-Strength Low-Alloy with Improved Formability, General Requirements for.
15. A 653 – Standard Specification for Steel Sheet, Zinc-Coated (Galvanized) or Zinc-Iron Alloy-Coated (Galvannealed) by the Hot-Dip Process.
16. A 992 – Standard Specification for Structural Steel Shapes.
17. B 209 – Standard Specification for Aluminum and Aluminum-Alloy Sheet and Plate.
18. B 221 – Standard Specification for Aluminum and Aluminum-Alloy Extruded Bars, Rods, Wire, Profiles, and Tubes.
19. B 308 – Standard Specification for Aluminum-Alloy 6061-T6 Standard Structural Profiles.
20. B 429 – Standard Specification for Aluminum-Alloy Extruded Structural Pipe and Tube.
21. F 593 – Standard Specification for Stainless Steel Bolts, Hex Cap Screws and Studs.

D. American Welding Society (AWS):
1. A2.4 – Standard Symbols for Welding, Brazing, and Nondestructive Examination.

E. Occupational Safety and Health Administration (OSHA).

1.03 DEFINITIONS

A. Passivation: Removal of exogenous iron or iron compounds from the surface of a stainless steel by means of chemical dissolution resulting from treatment with an acid solution that removes the surface contamination but does not significantly affect the stainless steel itself.

1.04 SUBMITTALS

A. Product Data:
1. Aluminum grating stair tread.
2. Handrail and guardrail.
3. Manhole frames and covers.
4. Metal grating.

B. Shop drawings:
1. Handrails and guardrails:

a. Including details on connection attachments, gates, kick plates, ladders, and angles.
b. Indicate profiles, sizes, connection attachments, reinforcing, anchorage, size and type of fasteners, and accessories.
c. Include erection drawings, elevations, and details where applicable.
d. Indicate welded connections using standard AWS A2.4 welding symbols. Indicate net weld lengths.

2. Metal grating.
3. Stairs.
4. Miscellaneous metals.

C. Samples:
1. Guardrails with specified finishes.

D. Quality control submittals:
1. Design data.
2. Test reports:
a. Guardrails: 3 copies of certified tests performed by an independent testing laboratory certifying that guardrails meet current State and OSHA strength requirements.
b. Gratings:
1) Grating manufacturers' calculations showing that gratings will meet specified design load, stress, and deflection requirements for each size grating for each span.
2) Reports of tests performed.

PART 2 PRODUCTS

2.01 MATERIALS

A. General: Unless otherwise specified or indicated on the Drawings, structural and miscellaneous metals in accordance with the standards of the ASTM, including the following:

Item	ASTM Standard No.	Class, Grade Type or Alloy No.
Cast Iron		
Cast Iron	A 48	Class 40B
Steel		
Galvanized sheet iron or steel	A 653	Coating G90
Coil (plate)	A 635	--
Structural plate, bars, rolled shapes, and miscellaneous items (except W shapes).	A 36	--
Rolled W shapes	A 992	Grade 50
Standard bolts, nuts, and washers	A 307	--
High strength bolts, nuts, and hardened flat washers	A 325 A 490	--
Eyebolts	A 489	Type 1
Tubing, cold-formed	A 500	--
Tubing, hot-formed	A 501	--
Steel pipe	A 53	Grade B
Stainless Steel		
Plate, sheet, and strip	A 240	Type 316**
Bars and shapes	A 276	Type 304* or 316**
Bolts (Type 316)	F593	Group 2 Condition CW
Aluminum		
Flashing sheet aluminum	B 209	Alloy 5005-H14, 0.032 inches minimum thickness
Structural sheet aluminum-	B 209	Alloy 6061-T6
Structural aluminum	B 209 B 308	Alloy 6061-T6
Extruded aluminum	B 221	Alloy 6063-T42
** Use Type 316L if material will be welded.		

1. Stainless steels are designated by type or series defined by ASTM.
2. Where stainless steel is welded, use low-carbon stainless steel.

2.02 MANUFACTURED UNITS

A. Aluminum grating stair tread:

1. Manufacturers: One of the following or equal:
   a. IKG Borden Industries, Aluminum Grating Stair Tread with Mebac nosing.
   b. McNichols Co., Type A-Standard with Corrugated Angle Nosing.
2. Material: Welded aluminum grating tread with non-slip nosing and integral end plates for bolt on attachment to stair stringers
3. Size:
   a. Tread width: To equal tread spacing plus 1 inch minimum.
   b. Tread length: Length to suit stringer-to-stringer dimension indicated on the Drawings.
   c. Depth: 1-3/4 inches.
4. Bolts: Type 316 stainless steel.

B. Concrete inserts:
1. Concrete inserts for supporting pipe and other applications are specified in Section 15061.

C. Handrails and guardrails:
1. General:
   a. Design and fabricate assemblies to conform to current local, State, and OSHA standards and requirements.
   b. Coordinate layout of assemblies and post spacings to avoid conflicts with equipment and equipment operators.
      1) Indicate on the shop drawings locations of such equipment.
      2) Highlight locations where railings cannot be made continuous, and obtain Engineer's directions on how to proceed before fabricating or installing railings.
2. Aluminum handrails and guardrails (nonwelded pipe):
   a. Rails, posts, and fitting-assembly spacers:
      1) In accordance with ASTM B 429, 6005, 6063 or 6105, minimum Schedule 40, extruded aluminum pipe of minimum 1.89-inch outside diameter and 0.14-inch wall thickness.
   b. Kick plates: 6061 or 6105 aluminum alloy.
   c. Fastenings and fasteners: As recommended or furnished by the manufacturer.
   d. Other parts: 6063 extruded aluminum, or F214 or F514.0 aluminum castings:
      1) Fabrications: In accordance with ASTM B 209 or ASTM B 221 extruded bars:
         a) Bases: 6061 or 6063 extruded aluminum alloy.
      2) Plug screws or blind rivets: Type 305 stainless steel.
         a) Other parts: Type 300 series stainless steel.
   e. Finish of aluminum components:
      1) Anodized finish, 0.7 mil thick, applied to exposed surfaces after cutting. Aluminum Association Specification M12-C22-A41, mechanical finish non specular as fabricated, chemical finish-medium matte, anodic coating-clear Class I Architectural.
      2) Pretreat aluminum for cleaning and removing markings before anodizing.
   f. Fabrication and assembly:
      1) Fabricate posts in single, unspliced pipe length.

2) Perform without welding.
3) Do not epoxy bond the parts.
4) Maximum clear opening between assembled railing components as indicated on the Drawings.

g. Manufacturers: One of the following or equal:
1) Moultrie Manufacturing Company, Wesrail.
2) Golden Railings, Golden, CO, Riveted System.
3) Craneveyor Corporation Enerco Metals, C-V Rail.

3. Fastenings and fasteners: As recommended or furnished by guardrail manufacturer for use with this system.

D. Manhole frames and covers:
1. Yard manholes for site drainage structures: See Section 02084.
2. Pressure manhole and frame for access to filtered water flume: See drawings.
3. Material: Gray iron castings.
4. Finish: Unpainted.

E. Aluminum access hatches:
1. As indicated on the Drawings.

F. Metal gratings:
1. General:
a. Fabricate grating to cover areas indicated on the Drawings.
b. Unless otherwise indicated on the Drawings, grating over an opening shall cover entire opening.
c. Make cutouts in grating where required for equipment access or protrusion, including valve operators or stems, and gate frames.
d. Band ends of grating and edges of cutouts in grating:
1) End banding: 1/4 inch less than height of grating, with top of grating and top edge of banding flush.
2) Cutout banding: Full-height of grating.
3) Use banding of same material as grating.
4) Panel layout: Enable installation and subsequent removal of grating around protrusions or piping.
5) Openings 6 inches and larger: Lay out grating panels with edges of 2 adjacent panels located on centerline of opening.
6) Openings smaller than 6 inches: Locate opening at edge of single panel.
7) Where an area requires more than 1 grating section to cover area, clamp adjacent grating sections together at 1/4-points with fasteners acceptable to Engineer.
8) Fabricate steel grating sections in units weighing not more than 50 pounds each.
9) Fabricate aluminum grating sections in units of weighing not more than 50 pounds each.
10) Gaps between adjacent grating sections shall not be more than the clear spacing between bearing bars.
e. When requested by Engineer, test 1 section of each size grating for each span length involved on the job under full load:
1) Furnish a suitable dial gauge for measuring deflections.

f. Grating shall be aluminum, unless otherwise specified or indicated on the Drawings.

2. Aluminum grating:
   a. Material for gratings, shelf angles, and rebates: 6061-T6 or 6063-T6 aluminum alloy, except crossbars may be 6063-T5 aluminum alloy.
   b. Shelf angle concrete anchors: Type 304 or Type 316 stainless steel.
   c. Grating rebate rod anchors: 6061-T6 or 6063-T6 aluminum alloy.
   d. Bar size and spacing: As determined by manufacturer to enable grating to support design load.
   e. Design live load: A minimum of 100 pounds per square foot uniform live load on entire grating area, but not less than the live load indicated on the Drawings for the area where grating is located.
   f. Maximum fiber stress for design load: 12,000 pounds per square inch.
   g. Maximum deflection due to design load: 1/240 of grating clear span.
   h. Maximum spacing of main grating bars: 1-1/8 inches clear between bars.
   i. Minimum grating height: 1-1/2 inches.
   j. Manufacturers: One of the following or equal:
      1) IKG Borden Industries, grooved aluminum I-bar.
      2) Brodhead Steel Products, Inc., grooved aluminum I-bar.

G. Stairs:
   1. Aluminum stairs:
      a. Stringers: 6061-T6 aluminum alloy.
      b. Stair treads:
         1) Aluminum of same type specified under Aluminum Grating.
         2) Of sizes indicated on the Drawings, and 1-3/4 inch minimum depth with cast abrasive type safety nosings.
      c. Handrails and guardrails: Aluminum pipe specified under Aluminum Handrails and Guardrails (Nonwelded Pipe).
      d. Fasteners: Type 304 or Type 316 stainless steel.

H. Miscellaneous aluminum:
   1. Fabricate aluminum products, not covered separately in this Section, in accordance with the best practices of the trade and field assemble by riveting or bolting.
   2. Do not weld or flame cut.

I. Miscellaneous cast iron:
   1. General:
      a. Tough, gray iron, free from cracks, holes, swells, and cold shuts.
      b. Quality such that hammer blow will produce indentation on rectangular edge of casting without flaking metal.
      c. Before leaving the foundry, clean castings and apply 16-mil dry film thickness coating of coal-tar epoxy, unless otherwise specified or indicated on the Drawings.

J. Miscellaneous stainless steel:
   1. Provide miscellaneous stainless steel items not specified in this Section as indicated on the Drawings or specified elsewhere.

a. Fabricate and install in accordance with the best practices of the trade.

2. Cleaning and passivation:
   a. Following shop fabrication of stainless steel members, clean and passivate fabrications.
   b. Finish requirements: Remove free iron, heat tint oxides, weld scale and other impurities, and obtain a passive finished surface.
   c. Provide quality control testing to verify effectiveness of cleaning agents and procedures and to confirm that finished surfaces are clean and passivated.
      1) Conduct sample runs using test specimens with proposed cleaning agents and procedures as required to avoid adverse effects on surface finishes and base materials.
   d. Pre-clean, chemically descale (pickle), and final clean fabrications in accordance with the requirements of ASTM A 380 to remove deposited contaminants before shipping.
      1) Passivation by citric acid treatment is not allowed.
         a) If degreasing is required before cleaning to remove scale or iron oxide, cleaning (pickling) treatments with citric acid are permissible; however, these treatments shall be followed by inorganic cleaners such as nitric-hydrofluoric acid.
      2) Provide acid descaling (pickling) in accordance with Table A1.1 of Annex A1 of ASTM A 380.
      3) After pickling, final cleaning of stainless steel shall conform to Part II of Table A2.1 of Annex A2 of ASTM A 380.
   e. After cleaning, inspect using methods specified for “gross inspection” in ASTM A 380.
   f. Improperly or poorly cleaned and passivated materials shall not be shipped and will not be accepted at the job site.

K. Miscellaneous structural steel:
   1. Provide miscellaneous steel items not specified in this Section as indicated on the Drawings or specified elsewhere.
      a. Fabricate and install in accordance with the best practices of the trade.

L. Isolating sleeves and washers:
   1. Manufacturers: One of the following or equal:
      a. Central Plastics Company, Shawnee, Oklahoma.
      b. Corrosion Control Products, PSI Inc., Gardena, CA.
   2. Sleeves: Mylar, 1/32 inch thick, 4,000 volts per mil dielectric strength, of proper size to fit bolts and extending half way into both steel washers.
   3. One sleeve required for each bolt.
   4. Washers: The inside diameter of all washer shall fit over the isolating sleeve and both the steel and isolating washers shall have the same inside diameter and outside diameter.
      a. Proper size to fit bolts. 2 insulating washers are required for each bolt.
      b. Two 1/8-inch thick steel washers for each bolt.
      c. G3 Phenolic:
         1) Thickness: 1/8 inch.
         2) Base material: Glass.
         3) Resin: Phenolic.

4) Water absorption: 2 percent.
5) Hardness (Rockwell): 100.
6) Dielectric strength: 450 volts per mil.
7) Compression strength: 50,000 pounds per square inch.
8) Tensile strength: 20,000 pounds per square inch.
9) Maximum operating temperature: 350 degrees Fahrenheit.

PART 3 EXECUTION

3.01 EXAMINATION

A. Verification of conditions:
1. Examine work in place to verify that it is satisfactory to receive the work of this Section.
2. If unsatisfactory conditions exist, do not begin this work until such conditions have been corrected.

3.02 INSTALLATION

A. General:
1. Install products as indicated on the Drawings, and in accordance with shop drawings and manufacturer's printed instructions, as applicable except where specified otherwise.
2. Interface between materials:
a. Dissimilar metals: Where steel comes in contact with dissimilar metals (aluminum, stainless steel, etc.), separate or isolate the dissimilar metals using isolating sleeves and washers.
1) Make application so that the isolating or protective barrier is not visible in the completed construction.
b. Aluminum in contact with concrete or masonry: Coat aluminum surfaces as specified in Section 09960.
c. Aluminum in contact with concrete or masonry.

B. Handrails and guardrails:
1. General:
a. Fasten pipe rails to fittings with Series 300 stainless steel pop rivets or flush set screws.
b. Make pipe cuts clean and straight, free of burrs and nicks, and square and accurate for minimum joint-gap.
c. Drill and countersink holes to proper size, as required for a tight flush fit of screws and other component parts.
d. Space attachment brackets as indicated in the manufacturer's instructions.
2. Aluminum pipe handrails and guardrails:
a. During construction, keep exterior surfaces of handrails and guardrails covered with 0.4 millimeters, minimum, heat shrink polyethylene film.
b. Do not remove protective film before handrails and guardrails have been accepted by Engineer nor before other work in proximity of handrails and guardrails has been completed.

c. Discontinue handrails and guardrails at lighting fixtures.
d. Provide 1/8-inch diameter weep hole at base of each post.
e. Space posts as indicated on the Drawings.
f. Anchor posts into concrete by grouting posts into formed holes in concrete, into stainless steel sleeves cast in concrete; or bracket mount to face of concrete surfaces as specified and indicated on the Drawings.
g. Space rails as indicated on the Drawings.
h. Make adequate provision for expansion and contraction of kick plates and rails.
    1) Make provisions for removable sections where indicated on the Drawings.
i. Make lower rails a single, unspliced length between posts, or continuous.
j. Make top rails continuous whenever possible, and attach single, unspliced lengths to 3 posts minimum.
k. Draw up fasteners tight with hand wrench or screw driver.
l. Space attachment brackets as indicated on shop drawings or in manufacturer's installation instructions.
m. Completed installation shall have handrails and railings rigid and free of play at joints and attachments.
n. Protect handrail and guardrail finish from scratches, gouges, dents, stains, and other damage.
o. Replace damaged or disfigured handrails and guardrails with new.
p. Shortly before final acceptance of the work, and after removal of protective polyethylene film, clean handrails and guardrails with mild detergent or with soap and water.
    1) After cleaning, thoroughly rinse handrails and guardrails and wipe with soft cloth.
q. Erect guardrail straight, level, plumb, and true to the positions as indicated on the Drawings. Correct deviations from true line of grade, which are visible to the eye.

C. Manhole frames and covers:
    1. Installation: As specified in Section 02084.

D. Aluminum access hatches:
    1. Installation: In accordance with manufacturer's recommendations.

E. Metal gratings:
    1. General:
        a. Allow 1/8-inch maximum clearance between ends of grating and inside face of vertical leg of shelf angles.
        b. Horizontal bearing leg of shelf angles shall be 2 inches minimum.
        c. Install aluminum plate or angles where necessary to fill openings at changes in elevation and at openings between equipment and grating.
        d. Install angle stops at ends of grating.
        e. Installed grating shall not slide out of rebate or off support.
        f. Weld stops in place, unless otherwise specified or indicated on the Drawings.
        g. Top surfaces of grating sections adjacent to each other shall lie in same plane.

2. Aluminum grating:
   a. Aluminum grating: Support on aluminum shelf angles or rebates.

F. Stairs:
1. General:
   a. Install guard railings around stair wells as indicated on the Drawings or specified.

G. Stainless Steel:
1. Welding:
   a. Passivate field-welded surfaces:
      1) Provide cleaning, pickling and passivating as specified in this Section.
      2) Clean using Derustit Stainless Steel Cleaner, or equal.

END OF SECTION

SECTION 08412

ALUMINUM STOREFRONTS

PART 1 GENERAL

1.01 SUMMARY

A. Section includes: Aluminum entrance and storefront framing systems.

B. Related sections:
1. The Contract Documents are complementary; what is called for by one is as binding as if called for by all.
2. It is the Contractor's responsibility for scheduling and coordinating the Work of subcontractors, suppliers, and other individuals or entities performing or furnishing any of Contractor's Work.
3. The following Sections are related to the Work described in this Section. This list of Related Sections is provided for convenience only and is not intended to excuse or otherwise diminish the duty of the Contractor to see that the completed Work complies accurately with the Contract Documents.
   a. Section 08800 – Glazing.

1.02 REFERENCES

A. Aluminum Association (AA):
1. 45 – Designation System for Aluminum Finishes.

B. ASTM International (ASTM):
1. A 36 – Standard Specification for Carbon Structural Steel.
2. B 221 – Standard Specification for Aluminum and Aluminum-Alloy Extruded Bars, Rods, Wire, Shapes, and Tubes.
3. B 633 – Standard Specification for Electrodeposited Coatings of Zinc on Iron and Steel.
4. E 283 – Standard Test Method for Determining Rate of Air Leakage Through Exterior Windows, Curtain Walls, and Doors Under Specified Pressure Differences Across the Specimen.
5. E 330 – Standard Test Method for Structural Performance of Exterior Windows, Doors, Skylights, and Curtain Walls by Uniform Static Air Pressure Difference.
6. E 331 – Standard Test Method for Water Penetration of Exterior Windows, Skylights, Doors, and Curtain Walls by Uniform Static Air Pressure Difference.

1.03 PERFORMANCE REQUIREMENTS

A. Air infiltration of storefront: Maximum 0.06 cubic feet per minute at 6.24 pounds per square foot when tested in accordance with ASTM E 283.

B. Water infiltration of storefront: No water penetration when tested in accordance with ASTM E 331 at 8 pounds per square foot.

C. Safety factor: Minimum 1.65 of allowable stress when tested in accordance with ASTM E 330.

1.04 SUBMITTALS

A. Product data: Include cleaning instructions.

B. Shop drawings: Include the following:
   1. Storefront framing systems, glass and glazing, and details including components and attachments or junction with adjacent work.

C. Samples: Sufficient number of sections to show extremes of color range for each color selected.

D. Certificates of compliance: Include the following:
   1. Manufacturer's certificate, or certified test report from and accepted testing agency stating that storefront framing system meet or exceed performance requirements.
   2. Manufacturer's certificate stating that anodic finishes comply with requirements.

E. Manufacturer's Installation Instructions.

1.05 DELIVERY, STORAGE, AND HANDLING

A. Deliver storefront units and components marked with type and location of installation.

B. Protect aluminum from damage with protective sleeves, polyethylene sheets, removable coatings, or other suitable means.
   1. Protect prefinished aluminum surfaces with strippable coating.

C. Deliver products when proper facilities are available.

D. Ship and store products in manner that prevents damage such as warping, bending, stains, discolorations, scratches, abrasions, or soiling.

E. Remove protective devices only when required to perform work or in absence of damage-producing conditions prior to final acceptance.

PART 2 PRODUCTS

2.01 STOREFRONT

A. Manufacturers and type: One of the following or equal:
   1. Kawneer Co. Inc., Visalia, CA, Trifab VG 451.
   2. Amarlite Architectural Products, Atlanta, GA, equivalent product.
   3. PPG Industries, Inc., Denver, CO, equivalent product.
   4. VistaWall Architectural Products, Terrell, TX, equivalent product.

B. Framing material: Extruded 6063-T5, allow and temper in accordance with ASTM B 221 alloy G.S. 10A-T5, minimum 0.125 inches thick.

C. Dimensions: 2-inch face by 4-1/2 inch overall depth.

D. Glazing provisions: Center glazed in minimum 1-inch deep by 1-5/16 wide pockets, able to conceal insulating glass spacers, for flush glazing without projecting stops, capable of being inside glazed.

E. Glazing gaskets: EPDM elastomeric extrusions, manufacturer's standard sizes, and shapes.

F. Glass: Insulating, as specified in Section 08800.

G. Adapters and mountings for trim moldings and face materials: Capable of installation without interfering with normal assembly and weathering of storefront.

H. Steel reinforcing: ASTM A 36.

I. Flashings: Minimum 0.32-inch thick aluminum sheet.

J. Closures: Minimum 0.125-inch thick aluminum sheet.

K. Fasteners:
   1. Exposed fasteners: Aluminum, stainless steel or plated steel in accordance with ASTM B 633.
   2. Perimeter anchors: Aluminum or steel.

L. Anchorage and alignment brackets: Capable of concealed support of storefront from building structure.

M. Coating to isolate dissimilar metals: Bituminous paint, minimum 2 coats having minimum total thickness of 5 mils.

N. Coating to isolate aluminum from concrete, wood or other absorptive material: Zinc chromate metal primer, minimum 2 coats having minimum thickness of 3 mils.

O. Sealants: Meeting requirements of C920, Type S, Grade NS, Class 25, single component silicone sealant. Manufacturers: One of the following or equal:
   1. Tremco, Proglaze.

2. Pecora Corp., Number 864.
3. Dow Corning, Number 795.
4. General Electric, Number 1200 Series.

2.02 FABRICATION

A. Extrude sections true to details with clean, straight, sharply defined profiles, smooth surfaces of uniform texture, and free from defects impairing strength and durability.

B. Accurately mill and fit sections to provide flush hairline joints.

C. Execute cutting, fitting, forming, drilling, and grinding of metalwork prior to cleaning, finishing, treatment, and application of coatings.

D. Maintain continuity of line and accurate relations of planes and angles.

E. Securely attach and support mechanical joints with hairline fit of contacting members.

F. Install stiffeners to reinforce framing when necessary to meet performance requirements.

G. Separate dissimilar metals with bituminous paint or preformed separators which will prevent corrosion.

H. Separate metal surfaces at moving joints with nonmetallic separators to prevent freeze-up of joints.

I. Fabricate frame assemblies for exterior walls with flashing and weeps to drain penetrating moisture to exterior.

J. Allow for thermal expansion of exterior units.

K. Accurately make cutouts, recesses, mortising or milling

2.03 FINISHING

A. Exposed aluminum surfaces: Anodized in accordance with AA 45 Architectural Class 1, Anodic Coating AAM12C22A42/44; without gripper marks on exposed surfaces; with uniform color from exposed faces onto exposed edges, dark bronze color.

B. Concealed aluminum surfaces: Same as exposed aluminum surfaces or anodized in accordance with AA 45 Architectural Class 2, Anodic Coating AAM12C22A31, clear.

C. Exposed fasteners: Match adjacent material in color and appearance or 300 series stainless steel heat-tempered to match color of anodized surface.

D. Concealed steel fasteners:
   1. In contact with aluminum: Stainless steel, 300 Series.
   2. Not in contact with aluminum: Structural or mild steel hot-dip galvanized after fabrication and touched-up when welded.

E. Steel: Mill scale and rust cleaned or ground off, grease and dirt cleaned off, chemically etched and 1 prime coat applied.

PART 3 EXECUTION

3.01 EXAMINATION

A. Verify wall openings and adjoining work are ready to receive work of this Section.

3.02 INSTALLATION OF STOREFRONT

A. Install aluminum storefront systems in accordance with manufacturer's instructions and Engineer accepted shop drawings.

B. Separate or isolate dissimilar metals and materials with coatings prior to installation.

C. Set plumb, square, level, and in alignment with other work.

D. Use anchorage devices to securely attach framing assembly to structure.

E. Align assemblies plumb and level, free of warp or twist.
   1. Maintain assemblies dimensional tolerances, aligning with adjacent work.

F. Install watertight flashings.
   1. Set sill members in double bead of sealant.

G. Lead collected moisture or water to outside as directly as possible.

H. Seal joints between framing and building structure with silicone sealant.

3.03 CLEANING

A. Remove protective material from prefinished aluminum surfaces just before inspection for final acceptance.

B. Clean in accordance with recommendations of AA and manufacturer's cleaning instructions using only materials approved by aluminum manufacturer.
   1. Where doubt exists, make spot tests.

C. Remove soil or other sources of discoloration.

END OF SECTION

SECTION 08800

GLAZING

PART 1 GENERAL

1.01 SUMMARY

A. Section includes: Glass and glazing.

B. Related sections:
1. The Contract Documents are complementary; what is called for by one is as binding as if called for by all.
2. It is the Contractor's responsibility for scheduling and coordinating the Work of subcontractors, suppliers, and other individuals or entities performing or furnishing any of Contractor's Work.
3. The following Sections are related to the Work described in this Section. This list of Related Sections is provided for convenience only and is not intended to excuse or otherwise diminish the duty of the Contractor to see that the completed Work complies accurately with the Contract Documents.
   a. Section 01110 – Summary of Work.
   b. Section 08412 – Aluminum Storefronts.

1.02 REFERENCES

A. American National Standards Institute (ANSI):
1. Z97.1 – Safety Glazing Materials Used in Buildings – Safety Performance Specifications and Methods of Test.

B. ASTM International (ASTM):
1. C 1036 – Standard Specification for Flat Glass.
2. C 1048 – Standard Specification for Heat-Treated Flat Glass – Kind HS, Kind FT Coated and Uncoated Glass.
3. E 773 – Standard Test Method for Accelerated Weathering of Sealed Insulating Glass Units.

C. Glass Association of North America (GANA):
1. GANA Glazing Manual.

D. Insulating Glass Certification Council (IGCC):
1. Certified Products Directory.

E. U.S. Consumer Product Safety Commission (CPSC):
1. 16 CFR 1201 – Safety Standard for Architectural Glazing Materials.

1.03 DEFINITIONS

A. Full height windows: Windows meeting the following conditions:
   1. Lowest edge is less than 18 inches above floor.
   2. Area is greater than 9 square feet.
   3. Walking surface is on both sides either of which is within 36 inches of window.
   4. Window has no minimum 1-1/2-inch railing or mullion at from 24 to 36 inches above floor.

1.04 SUBMITTALS

A. Product data.

B. Shop drawings: Locations of glass types and typical glazing details.

C. Samples: As follows:
   1. Glazing sealants, 2-inch long beads, for color selection.
   2. Glass, 1 square foot of each type specified.

D. Certificates of compliance: Certification that tempered glass in accordance with ANSI Z97.1 and CPSC 16 CFR 1201.

E. Manufacturer's Installation Instructions.

1.05 REGULATORY REQUIREMENTS

A. As specified in Section 01110.

B. Provide glass and glazing that conforms to CPSC 16 CFR, Part 1201, and exit requirements of the building code.

1.06 DELIVERY, STORAGE, AND HANDLING

A. Deliver, store, and handle materials in manner to prevent damage.

B. Deliver and store packaged materials in original containers bearing manufacturer's name.

C. Deliver glass affixed with manufacturer's labels showing strength, grade, thickness, type and quality of glass, and for insulating glass, IGCC certification label.

D. Remove labels after installation, inspection, and final acceptance.

1.07 PROJECT CONDITIONS

A. Perform glazing when ambient air temperature is 40 degrees Fahrenheit or above.

PART 2 PRODUCTS

2.01 GLASS

A. Clear monolithic: ASTM C 1036, Type I, Class 1, Quality q3; minimum 1/4-inch thick.
   1. Manufacturers: One of the following or equal:
      a. PPG Industries, Inc., Cheswick, PA.
      b. Guardian Industries Corp., Auburn Hills, MI, Sunguard, Clear.

B. Tinted monolithic: ASTM C 1036, Type I, Class 2, Quality q3; tinted light bronze; minimum 1/4-inch thick.
   1. Manufacturers: The following or equal:
      a. PPG Industries, Inc., Cheswick, PA, Solarbronze.
      b. Guardian Industries Corp., Auburn Hills, MI, Sunguard, bronze.

C. Tempered: ASTM C 1048, Kind FT, Condition A, Type I, Class 1 or Class 2 as scheduled below, Quality q3; tempered without visible tong marks when installed; minimum 1/4-inch thick.
   1. Manufacturers: The following or equal:
      a. PPG Industries, Inc., Cheswick, PA, Herculite.
      b. Guardian Industries Corp., Auburn Hills, MI, equivalent product.

2.02 GLAZING MATERIALS

A. Setting blocks: Neoprene, 80 to 90 durometer.

B. Spacer blocks: 30 to 40 durometer, thickness equal or greater than insulated window thickness by minimum 6 inches long.

C. Pressure tape: Butyl rubber tape.
   1. Manufacturers: One of the following or equal:
      a. Tremco Mfg. Co., Tremco 440 Tape.
      b. 3-M Co., Weatherban 5422.

D. Sealant: Silicone.
   1. Manufacturers: One of the following or equal:
      a. General Electric Co., Silicone Construction Sealant Series SCS-1200.
      b. Dow Corning Corp., 999-A, Silicone Building and Glazing Sealant.

E. Glazing gaskets and other materials for exterior openings:
   1. Aluminum entrances and storefronts: As specified in Section 08412.
   2. Aluminum windows: As specified in Section 08520.

2.03 SOURCE QUALITY CONTROL

A. Allowable bow and warp tolerances: As measured with glass resting on edge upon two 1 inch wide supports:
   1. Typical: Maximum 1/8 inch in 48 inches.
   2. Tempered glass: Maximum allowed in accordance with ASTM C 1048.

PART 3 EXECUTION

3.01 EXAMINATION

A. Examine openings to receive glass for defects that would affect glass and glazing work.

B. Verify removal of rivets, screws, bolts, welding fillets, or other projections from clearances in glazing rabbets.

3.02 PREPARATION

A. Examine frames receiving glass and ensure surfaces are clean and dry.

B. Remove dust and oil from glass by wiping clean immediately before installation.

C. Verify that sealants are compatible with glazing materials.

3.03 INSTALLATION OF MONOLITHIC GLASS

A. In accordance with GANA Glazing Manual, manufacturer's instructions, and accepted shop drawings by the Engineer.

B. Accurately size and cut glass clean for each glazing condition.
   1. Do not nip edges.

C. Cut and set glass to full fit and play consistent with expansion and contraction requirements and at exterior for absolute security under maximum high velocity wind and vacuum stresses.

D. Maintain edge clearance at least equal to glass thickness from perimeter of glass to inside of rabbet.

E. Maintain 1/8-inch clearance between faces of glass and adjacent stop or bead.

F. Maintain minimum bite of 3/8 inch.

G. Set glass as required to ensure against optical distortion.

3.04 INSTALLATION OF GASKETS

A. Gaskets: Install in accordance with manufacturer's instructions.

B. Glazing of interior metal frames: Use pressure or foamed tape and sealant as indicated as required to eliminate rattle and reduce sound transmission.

3.05 SEALANT APPLICATION

A. Meeting requirements of C920, Type S, Grade NS, Class 25, single component silicone sealant, unless specifically noted otherwise. Manufacturers: One of the following or equal:
   1. Tremco, Proglaze.
   2. Pecora Corp., Number 864.
   3. Dow Corning, Number 795.
   4. General Electric, Number 1200 Series.

B. Ensure protective coatings have been removed from aluminum surfaces.

C. Where setting blocks and spacer shims are required to be set in sealant, butter with sealant, place into position, and allow to set prior to installation of glass.

D. Neatly tool sealant or compound joints to compress material and improve adhesion. Repair or replace pockets exposed by tooling.

3.06 CLEANING

A. After inspection by Engineer, remove labels and marks from glass in accordance with manufacturer's published recommendations.

B. Clean glass and surrounding surfaces from spatter and blemishes resulting from glazing operations.

C. Clean and polish glass inside and outside.

D. Clean glass with a soft, clean, grit-free cloth and mild soap, detergent, or slightly acidic cleaning solution.
   1. Immediately rinse with clean water and remove excess rinse water with a clean squeegee.
   2. Do not use an abrasive cleaner.

E. Remove grease and miscellaneous glazing materials with commercial solvent. Follow with normal wash and rinse.
   1. Be careful not to damage joint sealers.

3.07 GLASS AND LOCATION SCHEDULE

A. Exterior locations: Glass as follows, unless otherwise scheduled or indicated on the Drawings:
   1. Typical: 1/4 inch thick monolithic, tempered, and tinted. Tint color shall match glass removed from existing window.

END OF SECTION

SECTION 11292A

FLAP GATES

PART 1 GENERAL

1.01 SUMMARY

A. Section includes: Framed flap gates.

B. Related sections:
1. The Contract Documents are complementary; what is called for by one is as binding as if called for by all.
2. It is the Contractor's responsibility for scheduling and coordinating the Work of subcontractors, suppliers, and other individuals or entities performing or furnishing any of Contractor's Work.
3. The following Sections are related to the Work described in this Section. This list of Related Sections is provided for convenience only and is not intended to excuse or otherwise diminish the duty of the Contractor to see that the completed Work complies accurately with the Contract Documents.
   a. Section 09901 – Protective Coatings.

1.02 REFERENCES

A. ASTM International (ASTM):
1. A 48 – Standard Specification for Gray Iron Castings.
2. A 126 – Standard Specification for Gray Iron Castings for Valves, Flanges, and Pipe Fittings.
3. A 276 – Standard Specification for Stainless Steel Bars and Shapes.
4. B 139 – Standard Specification for Phosphor Bronze Rod, Bar, and Shapes.
5. B 584 – Standard Specification for Copper Alloy Sand Castings for General Application.
6. D 2000 – Standard Classification System for Rubber Products in Automatic Applications.

1.03 DESIGN REQUIREMENTS

A. Flap gates shall open when there is a differential pressure across the flap of 0.2 feet or less.

B. With the flap gate submerged, the head loss shall not exceed 0.3 feet at all existing velocities for gates 60 inches or smaller.

C. Flap gate shall meet allowable seating pressures as specified by flap gate manufacturer.

D. Allowable leakage through the flap gate (gallons per day per foot of wetted perimeter), resulting from seating load, shall be minimum specified by flap gate manufacturer.

1.04 SUBMITTALS

A. Product data.

B. Shop drawings.

C. Manufacturer's installation instructions.

D. Design data and calculations substantiating conformance with the drawings and specifications.

E. Manufacturer shall certify in writing that installed flap gates meet specified leakage and headloss requirements.

PART 2 PRODUCTS

2.01 MANUFACTURERS

A. Acceptable manufacturer shall be Hydrogate Corporation, Model 50, or equal.

2.02 GATE COMPONENTS

A. Seat and Cover: Cast Iron, ASTM A126, Class B.
   1. Frame:
      a. Size(s) as indicated on the Drawings.
      b. Mount per manufacturer recommendations.
   2. Cover:
      a. Cast in one piece or welded and of a dished or reinforced design to maximize strength, rigidity, and minimize weight.
      b. Cast a lifting eye at the top of the cover for manual operation.

B. Seating Face: Silicon Bronze, ASTM B98, Alloy 651.

C. Hinge arms (pivot lugs):
   1. Double pivot-point design:
      a. The lower pivot shall allow the cover and the frame to lie in the same plane.
      b. The upper pivot shall be adjustable to vary sensitivity to unseating heads.
   2. Materials: Ductile Iron, ASTM A536 Grade 80-55-06.

D. Hinge pins (links): Ductile Iron, ASTM A536 Grade 80-55-06.

E. Other: Stainless Steel, ASTM F593 (Bolts), Alloy Group 2, Type 316 (Fasteners) and Bronze, ASTM B584, Alloy 932 (Bushings).

2.03 WALL MOUNTING FLANGE

A. Material: Cast iron of sufficient section secure flap to wall to resist permanent distortion due to casting and installation stresses.

B. Width of mounting flange at wall:
   1. Minimum 1/2-inch wider than mounting flange of gate.
   2. Of sufficient width to locate center line of anchor bolts at least 4 inches from edge of concrete opening, unless otherwise approved by the Engineer.

C. Machine front of wall flange, drill, and tap to match drilling on gate frame.

D. Mark top center of each wall flange.

E. Provide stainless steel studs for attaching the gate frame to wall flange.

2.04 ANCHOR BOLTS

A. When required, anchors of sufficient quantity and length to anchor the gate.

B. Material: Type 316 stainless steel.

2.05 COATING

A. Coat flap gates in the factory prior to testing.

B. Coat with surface tolerant high solids epoxy. As specified in Section 09901.

C. Repair or touch-up damaged areas of the factory applied coating in the field.

PART 3 EXECUTION

3.01 INSTALLATION

A. Install in accordance with manufacturer's instructions.

B. Mount wall flanges and gates plumb in both vertical planes and level in horizontal plane.
   1. Provide non-shrink cement or non-shrink epoxy grout between wall and wall flange to provide solid attachment.

C. Provide factory-trained personnel to:
   1. Check the complete installation.
   2. Make necessary adjustments.
   3. Conduct field-testing.

D. Coat seating surfaces between frame and wall thimble with a waterproof plastic compound prior to tightening of frame studs.

3.02 FIELD QUALITY CONTROL

A. Testing:
   1. Leakage tests: Demonstrate compliance with allowable leakage limits set forth herein.
   2. After the gate installation and checking, exercise each gate from the closed position to fully open position and back to the closed position at least twice and verify gate is properly seated.
   3. Provide manufacturer's certificate of proper installation.

END OF SECTION

SECTION 11420

PERISTALTIC METERING PUMPS

PART 1 GENERAL

1.01 SUMMARY

A. Section Includes:
   1. Contractor shall provide all labor, materials, equipment, and incidentals required to furnish and install peristaltic metering pumps complete and operational with pumps, motors, control equipment and appurtenances as shown and indicated in the Contract Documents.

B. Coordination:
   1. Review installation procedures under this and other Sections and coordinate installation of items that must be installed with or before peristaltic metering pumps and appurtenances Work.

C. Related Sections:
   1. The Contract Documents are complementary; what is called for by one is as binding as if called for by all.
   2. It is the Contractor's responsibility for scheduling and coordinating the Work of subcontractors, suppliers, and other individuals or entities performing or furnishing any of Contractor's Work.
   3. The following Sections are related to the Work described in this Section. This list of Related Sections is provided for convenience only and is not intended to excuse or otherwise diminish the duty of the Contractor to see that the completed Work complies accurately with the Contract Documents.

1.02 REFERENCES

A. Standards referenced in this Section are:
   1. American Bearing Manufacturers Association, (ABMA).
   2. American Gear Manufacturers' Association (AGMA).
   3. American National Standards Institute (ANSI).
   4. API 675, Positive Displacement Pumps Controlled Volume.
   5. American Society for Testing and Materials (ASTM).
   6. Institute of Electrical and Electronics Engineers (IEEE).
   7. National Electrical Code (NEC).
   8. National Sanitation Foundation (NSF).

1.03 QUALITY ASSURANCE

A. Qualifications:
   1. Manufacturer: Shall have minimum of five years experience producing substantially similar equipment to that required and shall be able to document of at least five installations in satisfactory operation for at least five years.

B. Component Supply and Compatibility:
   1. Obtain all materials and equipment included in this Section regardless of component manufacturer, from a single peristaltic metering pump Supplier.
   2. Peristaltic metering pumps and appurtenances equipment manufacturer shall review and approve or prepare all Shop Drawings and other submittals for components furnished under this Section.
   3. Materials and equipment shall be fully compatible with specified service conditions, and shall be integrated into overall assembly by peristaltic metering pumps and appurtenances equipment Supplier.

1.04 SUBMITTALS

A. Action Submittals: Submit the following:
   1. Shop Drawings:
      a. Complete layout and installation drawings for each type and size of pump showing mounting details, dimensions, fitting locations, and materials of construction.
      b. Wiring diagrams.
      c. Manufacturer supplied drawings of the Control Panel.
   2. Product Data:
      a. Complete product data for each size and type of pump, motor, and accessories, including manufacturer's brochure, specifications, weight, performance data, turndown, and capacity.
   3. Testing Plans:
      a. Source quality control testing plan.
      b. Field quality control testing plan.

B. Informational Submittals: Submit the following:
   1. Certificates:
      a. Paint certification.
   2. Manufacturer's Instructions:
      a. Setting drawings, templates, and directions for installing anchor bolts and other anchorage devices.
      b. Instructions for handling, storing, and installing equipment.
   3. Source Quality Control Submittals:
      a. Results of source quality control tests and inspections.
   4. Site Quality Control Submittals:
      a. Results of field quality control tests.
      b. Manufacturer's Reports: Submit a written report of results of each visit to Site by Supplier's service technician, including purpose and time of visit, tasks performed, and results obtained.
   5. Qualifications Statements:
      a. When requested by Engineer, submit qualifications data for manufacturer.

C. Closeout Submittals:
   1. Operation and Maintenance Data: Furnish Operation and Maintenance Manuals in conformance with the requirements of Section 01782, Operations and Maintenance Data.

2. Spare Parts, Extra Stock Materials, and Tools:
   a. Furnish the following:
      1) 2-Spare hose set for each pump with two lubricant refill per pump.
      2) One quart of touch-up paint.
      3) Two complete sets of special tools required for normal maintenance and operation.

1.05 DELIVERY, STORAGE AND HANDLING

A. Packing, Shipping, Handling, and Unloading:
   1. Deliver materials and equipment to Site to ensure uninterrupted progress of the Work. Deliver anchorage materials to be embedded in concrete in ample time to prevent delaying the Work.
   2. Inspect all boxes, crates, and packages upon delivery to the Site and notify Engineer in writing of loss or damage to products. Promptly remedy loss and damage to new condition in accordance with manufacturer's instructions.
   3. Conform to Section 01610, Basic Product Requirements.

B. Storage and Protection:
   1. Keep materials and equipment off ground using pallets, platforms, or other supports. Protect steel, packaged materials, and electronics from corrosion and deterioration.
   2. Conform to Section 01610, Basic Product Requirements.

PART 2 PRODUCTS

2.01 EQUIPMENT PERFORMANCE

A. System Description:
   1. Provide peristaltic hose metering pumps, complete with pump head, flexible hose, gearbox, motor, control panel and motor mounted variable speed drive.
   2. Provide equipment compatible with specified service conditions.

B. Performance Criteria:

Service Conditions	**BSP-01, BSP-02**
Location	BiSulfite Feed Room
Number Required	2
Service (Chemical and % Solution)	Sodium Bisulfite 38%
Specific Gravity of Pumped Fluid at 77 ^{o}F	1.33
pH of Pumped Fluid	4
Viscosity of Pumped Fluid (centipoises) @ 30C	~3
Temperature Range of Pumped Fluid (degrees F)	40-120
Min/Max Flow Rate (gallons per hour)	48 / 60

Service Conditions	**BSP-01, BSP-02**
Design Flow Rate (gallons per hour)	50
Back Pressure (psi)	5
Minimum Suction Lift (ft)	7
Pump Speed Range (rpm)	50-100
Max Motor Size (hp)	1

2.02 MANUFACTURERS

A. Products and Manufacturers: Provide one of the following:
   1. Blue-White, Verder Inc. M-Series
   2. Watson-Marlow Bredel, Inc. 620 Series
   3. Or approved equal.

2.03 DETAILS OF CONSTRUCTION

A. Pump Housing:
   1. Pump housing shall be die cast aluminum with integral cast iron rotor/shoe assembly.
   2. Each pump shall consist of a sealed lubricant filled housing, using NSF-listed food-grade, glycerin based lubricant.
   3. Hose shall be replaceable without cover or pump removal.
   4. Capable of delivering continuous discharge pressure specified in the performance criteria in Article 2.1 of this Section.
   5. Rotor shall be capable of rotating in either direction without damaging pump or hose.
   6. Capable of self-priming, with suction lift capability of 27 feet of water.
   7. Able to run dry without damaging pump or hose.
   8. Pump shall not require the use of check valves or dynamic seals in contact with pumped fluid.
   9. Speed Adjustment:
      a. Manual scale with zero to 100 percent scale indication.
      b. Adjustment shall be possible while pump is operating.
      c. Infinitely-variable to meet or exceed minimum-to-maximum flow range specified in the performance criteria Article 2.1.
   10. Pump drive shall be complete with brackets, supports, fasteners, and appurtenances suitable for mounting as shown or indicated in the Drawings. Enclosure finish shall provide long-term protection from environmental conditions. Unpainted enclosures are not acceptable. Each pump shall have a stainless steel nameplate with manufacturer name, model, serial number, rating, range, speed, and other pertinent data.

B. Hose:
   1. During normal operation, the inner wall of the hose shall be the only surface in contact with pumped fluid.
   2. Hose material shall be compatible with the pumped fluid.

C. Drive:
   1. Pumps to include NEMA 4X VFD for SCADA interface. Mount VFD directly to pump motor. VFD to accept remote run signal via dry contact and remote speed control via 4-20 mA analog signal. VFD shall be capable of returning a 'drive fail' signal to SCADA. VFD to include LCD display, keypad interface for programming, and should display pump output in GPH.
   2. Drive motor shall be inverter-duty type.
   3. Drive Speed: Infinitely variable to meet or exceed associated pump speed range specified in the performance criteria in Article 2.1.
   4. Enclosure: Totally Enclosed, Non-Ventilated (TENV).
   5. Rating: Continuous 24-hour per day operation, 40 degrees C ambient temperature.
   6. Power supply shall be 120V, single phase.
   7. Controls shall have manual override. Provide interface for the following signals:
      a. Analog Input:
         1) 4-20 mA DC (250 ohms) speed reference signal
      b. Digital Output: Auto/manual status, stop/run status, and alarm monitor status signals
      c. When in 'AUTO' the lead pump shall start when it receives a positive signal from the level element. The lead pump shall stop when the level element signals a return to its starting position.
      d. When in 'HAND' the pump system shall be manually operated from the pump controller interface.

2.04 APPURTENANCES

A. Leak Detector:
   1. Provide float type, electronic sensor type, or capacitance type leak sensor mounted to the drain port of the pump housing or the pump cover for leak detection and automatic pump shut down and alarm in the event of a hose failure.

B. Stand:
   1. Provide chemical resistant stand for mounting pumps as shown on Drawings.
   2. Pump height on stand shall be as per shown in the Drawings.
   3. The pump stand shall support pump skid assemblies as indicated on the Drawings, including but not limited to: isolation valves, check valves, pressure gauges, and pressure relief valves.

C. Nameplate:
   1. Provide pump with brass or Type 316 stainless steel nameplate attached with Type 316 stainless steel screws. Nameplate shall have engraved letters displaying the following minimum information:
      a. Maximum flow rate.
      b. Pressure and temperature rating.
      c. Date of manufacture.
      d. Manufacturer's name.
      e. Serial number.

2.05 MANUAL CONTROL INTERFACE

A. Provide a motor mounted control interface for each sodium bisulfite feed pump. The Control display shall allow the following pump controls:
   1. Flow Range: 5000:1 turn down flow range in 0.001 GPH increments.
   2. Display: Backlit graphical TFT Display capable of up to 8 lines of text with up to 26 characters per line to display pump tag number, flow rate, and programming instructions. Display shall also provide visual indication of running status via screen color: Blue = Running, White = Stopped and Red = Warning.
   3. Keypad: Keypad for start, stop, speed increment, speed decrement, rapid prime, and programming.
   4. Flow units: Programmable in either ml/min or gallons/hour.
   5. Security: Programmable keypad lock and PIN security for optional lockout of all keys except emergency start/stop.
   6. Auto Restart: feature to resume pump status in the event of power outage interruption.
   7. Fluid level monitor: Programmable flow totalization to advise operator when their supply tank is low.

2.06 METERING PUMP SKIDS

A. Pump skids shall be manufactured complete with chemical metering pumps, all necessary piping, valves, fittings, supports, electrical controls, and accessories as specified herein. Components of the skid system shall be as indicated on the Drawings and shall include the following items:
   1. Skid with drip lid.
   2. Metering pumps.
   3. Pressure gauges.
   4. Pressure switches.
   5. Ball valves.
   6. Pressure relief valves.
   7. Calibration columns.
   8. Controls.
   9. All piping, valves, gaskets, supports, hardware, wiring, and accessories necessary for a fully functioning skid.

B. The skid shall be constructed of chemical resistant materials such as polypropylene, polyethylene, FRP, or approved equal.

C. Piping shall be secured to the skid in accordance with Section 15102, Pipe Hangers and Supports.

D. Unions shall be used to allow easy maintenance of the system.

E. All piping shall be Schedule 80 PVC, and shall meet the requirements of Section 15067, Thermoplastic Pipe.

F. Each skid shall be completely assembled and tested by the manufacturer prior to delivery to the job site.

2.07 FINISHING

A. Shop Painting:
   1. Surface preparation and painting shall conform to Section 09901, Protective Coatings.
   2. Apply in the shop primer coating to metallic parts (excluding surfaces exempted) of pumps, motors, drives, frames, supports, and appurtenances.
   3. Do not paint corrosion-resistant parts such as plastic, fiberglass, and stainless steel.
   4. Gears, bearing surfaces, machined surfaces, and other surfaces that are to remain unpainted shall receive heavy application of grease or other rust-resistant coating. Maintain coating during storage and until equipment is placed into operation.

B. Field Painting:
   1. Conform to Section 09901, Protective Coatings.
   2. Contractor shall certify in writing that shop primer and finish coating systems are compatible with each other and conform to Section 09901, Protective Coatings.

2.08 TOOLS, SPARE PARTS AND MAINTENANCE MATERIALS

A. Each pump shall be furnished with the following spare parts:
   1. Two replacement hose elements per pump.
   2. One gallon hose lubricant per pump.

B. Provide all special tools for normal operation and maintenance.

2.09 SOURCE QUALITY CONTROL

A. Peristaltic Metering Pumps: Test each pump in the shop as follows:
   1. Calibration test.
   2. Inspect all components prior to and during shop testing.
   3. Capacity/head tests, including pump's rated design point, at shutoff, and at maximum flow.

B. Controls: Test controls in the shop as follows:
   1. Verify operation in all operating modes.
   2. Inspect control components and panels for defects.
   3. Perform manufacturer's standard quality tests.

C. Valves: Test valves and appurtenances in the shop as follows:
   1. Inspect components for defects.
   2. Perform manufacturer's standard quality tests.

PART 3 EXECUTION

3.01 INSPECTION

A. Examine conditions under which products are to be installed and notify Engineer in writing of conditions detrimental to proper and timely completion of the Work. Do not proceed with the Work until unsatisfactory conditions have been corrected.

3.02 INSTALLATION

A. Install materials and equipment in conformance with Laws and Regulations, applicable standards, manufacturer's instructions and recommendations, and the Contract Documents.

B. Anchorages and Base Plates:
   1. Provide anchorages in new or existing concrete, as applicable, in accordance with equipment manufacturer's recommendations and the Contract Documents.

C. General:
   1. Perform drilling and fitting required for installation. Set equipment accurately in location, alignment, and elevation, plumb, true, and free of rack.
   2. Making plate cutouts or openings at the Site is not allowed.
   3. Fit exposed connections accurately together to form tight hairline joints.
   4. Provide utility connections in accordance with the Contract Documents.
   5. Align and adjust equipment including motors, belts, drives, support stands, and appurtenances in presence of Engineer.
   6. Prior to energizing electric motor drive equipment, rotate drive motor by an external source to demonstrate free operation of all mechanical parts. Do not energize equipment until safety devices are installed, connected, and functional.
   7. Install valves in accordance with applicable provisions of Section 15102, Process Valves, Smaller Than Four-Inch Diameter.

D. Conform to Section 01755, Starting Systems.

3.03 FIELD QUALITY CONTROL

A. Site Tests:
   1. Following installation, Contractor and qualified field service representative of Supplier shall conduct operating tests of all equipment, functions, and controls at the Site in presence of Engineer.
   2. Field Operating Test:
      a. Field test equipment and its controls in local mode, followed by demonstrating proper operation and controls in automatic mode. Demonstrate that each part individually and all parts together function properly in manner intended. Total duration of testing shall be 48 hours, continuous and uninterrupted, in automatic mode. All testing equipment and labor shall be by Contractor.

b. Should tests result in malfunction, make necessary repairs, revisions, and adjustments and restart test from the beginning. Repeat tests and repairs, revisions, and adjustments until, in opinion of Engineer, installation is complete and equipment is functioning properly and accurately, and is ready for permanent operation.

B. Manufacturer's Services: Provide a qualified, factory-trained service member to perform the following:
1. Instruct Contractor in installing equipment.
2. Supervise installation of materials and equipment.
3. Inspect, calibrate, adjust, and test equipment after installation and ensure proper operation.
4. Instruct Owner's personnel in operating and maintaining the equipment.
5. Manufacturer's representative shall make a minimum of three visits, with minimum of four (4) hours at the Site for each visit. First visit shall be for instructing Contractor and supervising installation of equipment; second visit shall be for checking, adjusting, and calibrating completed installation and starting up the system; third visit shall be to instruct operations and maintenance personnel. Representative shall revisit the Site as often as necessary until installation is acceptable.
6. Training: Furnish services of Supplier's qualified factory trained specialists to instruct Owner's operations and maintenance personnel in recommended operation and maintenance of materials and equipment. Training requirements, duration of instruction and qualifications shall be in accordance with Section 01923, Instruction of Operations and Maintenance Personnel.
7. All costs, including expenses for travel, lodging, meals and incidentals, and cost of travel time, for visits to the Site shall be included in the Contract Price.

END OF SECTION

SECTION 13120

PRE-CAST SEGMENTAL CONCRETE BUILDING

PART 1 GENERAL

1.01 SUMMARY

A. Furnish a pre-cast, post-tensioned concrete building. Building to be field erected on a cast-in-place concrete foundation as indicated in the Project Structural Drawings. Pre-cast building to be EASI-SET brand as manufactured by Lonestar Prestress Mfg., Inc. Houston Texas or approved equal. Building to be provided by manufacturer with all necessary openings as specified in conformance with manufacturer's structural requirements.

1.02 PAYMENT

A. No separate payment will be made for work performed under this Section. Include cost of work performed under this Section in pay items for which this work is a component.

1.03 RELATED WORK

A. Division 16 – Electrical: Pre-cast building shall comply with all requirements of Division 16 for conduit, wiring, labeling, devices, and grounding.

1.04 CODES, STANDARDS, AND REFERENCES

A. ACI-318-05, “Building Code Requirements for Structural Concrete”.

B. ASCE-7-05, “Minimum Design Loads for Buildings and Other Structures”.

C. 2006 IBC, “2006 International Building Code” with COH Amendments.

D. PCI Design Handbook, Precast/Prestressed Concrete Institute.

E. UL 752, Standard for Safety for Bullet Resisting Equipment, Underwriters Laboratories Inc.

F. “Manual of Standard Practice”, Concrete Reinforcing Institute.

G. ASTM, American Society for Testing and Materials:
   1. C150 - Standard Spec. for Type I and Type II – Low Alkali Portland Cement.
   2. C33 - Standard Spec. for Concrete Aggregates.
   3. A36 - Standard Spec. for Carbon Structural Steel.
   4. A615 - Standard Spec. for Deformed and Plain Billet-Steel Bars for Concrete Reinforcement.

5. A706 - Standard Spec. for Low-Alloy Steel Deformed and Plain Bars for Concrete Reinforcement.
6. A416 - Standard Spec. for Steel Strand, Uncoated Seven-Wire for Prestressed Concrete.
7. A185 - Standard Spec. for Steel Welded Wire Fabric, Plain, for Concrete Reinforcement.
8. A307 - Standard Spec. for Carbon Steel Bolts and Studs, 60,000 PSI Tensile Strength.
9. A123 - Standard Spec. for Zinc (Hot-Dip Galvanized) Coatings on Iron and Steel Products.
10. A153 - Standard Spec. for Zinc Coating (Hot-Dip) on Iron and Steel Hardware.

1.05 QUALITY ASSURANCE

A. Building fabricator must have a minimum of 5 years experience manufacturing pre-cast, post-tensioned concrete buildings.

B. No alternate building designs are acceptable.

1.06 DESIGN REQUIREMENTS

A. Dimensions:
   1. Exterior: 10'-0” x 20''-0” x 10’-10”H
   2. Interior: Two 8'-11" x 9'-2-1/4" rooms with 10’-0”H

B. Standard Design Loads:
   1. Standard Wind Loading - 120 MPH (ASCE 7-02, Category IV, Exposure C, Enclosed Building)
   2. Standard Roof Live Load - 60 PSF
   3. Seismic Design category ‘A’, Occupancy Category IV

C. Roof:
   1. Roof panel shall slope 6 inch in 10’-0 inch in the direction of the narrow dimension from peak to edge. The roof shall extend a minimum of 4 inch beyond the wall panel on each side and have a turndown design which extends 3/4 inch below the top edge of the wall panels to prevent water migration into the building along top of wall panels. Roof shall also have a straight smooth edge.

D. Keyway Roof Joints:
   1. Grout in keyway shall be polymer concrete placed after coating keyway with a methyl methacrylate resin and isocyanate resin.

E. Floor:
   1. There shall be a 1 1/2 inch deep recess, the width of the wall panels, cast into the floor. The 1 1/2 inch recess makes the interior floor surface 1 1/2 inch higher than the joint between the wall panel and floor slab preventing intrusion of water.

F. Wall panels shall set on top of floor slab. Wall panels are to be a minimum of 6.5 inch thick.

G. Walls to be of an insulated precast concrete sandwich panel type. The walls shall have an extruded polystyrene core sandwiched between interior and exterior concrete wythes. The wall panels shall have a minimum thickness of 6.5 inch. Minimum wythe thickness shall be 2 inch. The walls shall have a minimum equivalent wood framed wall R-value of R-26 per the 2003 International Energy Conservation Code.

1.07 SUBMITTALS

A. Make submittals in accordance with Section 01330 - Submittal Procedures, and Section 01340 - Shop Drawings, Product Data, and Samples.

B. The submittal shall contain building engineering calculations that are to be designed and sealed by a Professional Engineer licensed in the state of Texas.

C. Summary of design criteria used in the building design including, as a minimum, material properties, loading, and dimensions assumed.

D. Shop drawings containing as a minimum of the following information:
   1. Elevations of all four sides of the building as well as plans for the roof and floor. The drawings shall contain critical dimensions required to fully describe the structure as well as allow for accurate field erection. Drawings shall be to scale providing a proportionally accurate representation of the structure.
   2. Plan and section drawings showing interior pre-cast concrete partitions (if required).
   3. Connection details and pertinent dimensions.
   4. Proposed 28-day concrete compressive strength.

E. Product data information sheets including but not limited to:
   1. Doors, Door frames, and door hardware including handles/doorknobs, hinges, locks, overhead stops and holders, thresholds and closer, etc. All door finish hardware shall be in compliance with ADA requirements.

PART 2 PRODUCTS

2.01 MATERIALS

A. Concrete:
   1. Concrete shall have 6,000-psi minimum, 28-day compressive strength.
   2. Cement used in the manufacture of concrete shall be Low Alkali Type I/II Portland Cement conforming to the requirements of ASTM C150 with total alkalis not to exceed 0.6 percent.
   3. Coarse aggregate shall be crushed limestone with a maximum size per ASTM C33 of 3/4 inch.

B. Reinforcing Steel shall be in accordance with requirements of ASTM A615, grade 60 for deformed bars and ASTM 185, grade 80 for welded wire fabric unless otherwise indicated.

C. Post-tensioning Strandshall be ½ inch diameter, grade 270, 7-wire, low relaxation strand:
   1. Plain.
   2. Encased in greased plastic sheathing (ASTM A416).
   3. If post-tensioning is not used in the roof panel, the following guidelines must be followed to ensure a watertight roof design.
      a. The entire pre-cast concrete roof panel surface must be cleaned and primed with a material that prepares the concrete surface for proper adherence to the coating material.
      b. The entire pre-cast concrete roof panel surface shall be sealed with a .045 inch EPDM continuous membrane cemented to the concrete with a compound designed for this purpose.

D. Lifting Hardware: The lifting hardware to shall be permanently cast into the concrete and shall be hot dipped galvanized.

E. Caulking: All joints between panels shall be caulked on the exterior and interior surface of the joints. Caulking shall be SIKAFLEX-IA elastic sealant or equal. Exterior caulk joint to be 3/8 inch x 3/8 inch square so that sides of joint are parallel for correct caulk adhesion. Back of joint to be taped with bond breaking tape to ensure adhesion of caulk to parallel sides of joint and not the back.

F. Panel Connections: All panels shall be securely bolted together with 3/8 inch thick steel brackets. Steel is to be of structural quality, hot-rolled carbon complying with ASTM A36 and hot dipped galvanized after fabrication. All fasteners to be 1/2 inch diameter bolts complying with ASTM A307 for low-carbon steel bolts. Cast-in anchors used for panel connections to be Dayton-Superior #F-63, or equal. All inserts for corner connections must be secured directly to form before casting panels. Floating of connection inserts will not be allowed.

2.02 ACCESSORIES

A. Door and Frame: Shall comply with Steel Door Institute "Recommended Specifications for Standard Steel Doors and Frames" (SDI-l00), and as herein specified. The building shall be equipped with two 3 foot-0 inch x 7 foot-6 inch, 18-gauge steel doors, with insulated core and galvanized. Doors shall open as noted on drawings. Frames shall be 16-gauge galvanized steel. Doors and frame shall be painted with one coat of rust inhibitor primer and one finish coat of epoxy paint, medium gray, if no other color is specified.

B. Door Hardware:
   1. Handle: Lindstrum lever type pull-handle, stainless steel, 8-1/2 inch x 2 inch.
   2. Lockset: City of Houston standard unit.
   3. Deadbolt: City of Houston standard unit.

4. Hinges: Hagar stainless steel five knuckle ball bearing with non-removable pins or equal.
5. Threshold: Hagar or National Guard Products extruded aluminum with neoprene seal or equal.
6. Overhead Door Holder: Yale surface mounted overhead slide type with safety release or equal.
7. Drip Cap: Hager or National Guard Products aluminum with stainless steel screws or equal.
8. Door Closer: Norton 7500 or Yale 4410 with hold open or equal.
9. Surface Bolts (Upper and Lower): Magnokrom Inc. 400-401 cadmium plated finish or equal, as required for double doors.
10. Astragal: Galvanized steel, same finish and brand as door, as required for double doors. Astragal shall be removable for equipment access.
11. Door Stop: Ives 445B26D brushed chrome (inactive leaf only) or equal, as required for double doors.
12. PANIC BARS: All doors shall be equipped with panic bars which open doors when pressure is applied to a horizontal bar on the inside of each door.

G. Air Conditioning/Heat Pump Unit: One two-ton wall mount HVAC Unit (BARD or equal) including supply and return air grills and thermostat. Provide a 240 volt single phase unit.

H. Exhaust Fan: One 1,000 CFM wall mounted exhaust fan with aluminum blade, housing and gravity exterior shutter. Provide a 120 volt single phase unit. Install the bottom of the exhaust fan 12 inch above the floor.

I. Air Supply Louver: One 1,000 CFM wall mounted aluminum air supply louver. Install the top of the louver 12 inch below the roof.

J. Unit Heater: One 1.5 kW wall mounted unit heater which can be rotated vertically and horizontally to aim the unit. Provide a separate thermostat. Provide a 120 volt single phase unit.

K. Pipe Sleeve: One 3 inch sleeve for process piping shall be included in one wall. See the building plan drawing for location.

L. Electrical: The electrical work and materials shall conform to Division 16.

2.02 FINISHES

A. Building Exterior
   1. Exposed Aggregate: The exterior finish of the building shall consist of washed brown firestone aggregate on all exterior wall surfaces with the exception of a 4 inch wide vertical smooth concrete reveal at the building corners. Aggregate must be seeded into top of panel while in form, chemically retarded, and high-pressure water washed to expose the aggregate to a depth of 1/8 inch.

B. Interior of Building: Smooth steel form finish on all interior panel surfaces.

1. The walls and ceiling inside the building shall be painted with a minimum of two coats of white paint.
2. Electrical: The electrical work and materials shall conform to Division 16.

PART 3 EXECUTION

3.01 SITE PREPARATION REQUIREMENTS (CAST-IN-PLACE FOUNDATION)

A. The precast, post-tensioned concrete building shall be erected on a cast-in-place concrete foundation. The foundation shall be constructed in accordance with the Contract Drawings.

B. The floor shall have a 1 1/2 inch x 10 inch deep recess, the width of the wall plus 3 1/2 inch wide cast into the floor around the perimeter except at doors. The 1 1/2 inch recess makes the interior floor surface 1 1/2 inch higher than the joint between the wall panel and the foundation preventing intrusion of water.

3.02 ACCESS

A. Access to the building site is indicated on the Contract Drawings.

3.03 ERECTION

A. The building manufacturer shall erect the building walls and roof.

3.04 AIR CONDITIONING / HEAT PUMP UNITS

A. The building manufacturer shall install and commission the air conditioning / heat pump, the unit heater and the exhaust fan.

END OF SECTION

SECTION 13300

PROCESS INSTRUMENTATION AND CONTROLS – GENERAL PROVISIONS

PART 1 GENERAL

1.01 SCOPE OF WORK

A. A pre-approved Process Control System Integrator (PCSI) shall furnish all services and equipment defined herein and in other specification sections as listed in Paragraph 1.03, Related Work. The PCSI shall invite City personnel to all tests. City personnel shall be notified of all test 7 days in advance of tests.

B. All materials, equipment, labor, and services required to achieve a fully configured integrated and operational process control system shall be provided. The PCSI shall design and coordinate the process control system for proper operation with related equipment and materials furnished by other suppliers under other sections of these specifications and with related existing equipment. Application software programming for the Programmable Logic Controller (PLC) System and programming/graphics development for the HMI shall be performed by the Software Engineer (SE) as addressed in Specification 13441. Programming, configuration, and integration, including but not limited to Ethernet configuration and communications between all field I/O and PLC communications shall also be provided as required by the SE. In addition, the SE shall be responsible for providing all third party software/PLC code required to establish communication with the supplied hardware. **It shall be understood that when the PCSI is directed in this specification to provide any of the services reserved in this paragraph for the SE, the SE and not the PCSI shall provide those services.**

C. All configuration, integration, including but not limited to: loading of all software on computers, network equipment configuration, Ethernet configuration, and communications between servers and RTUs shall be provided by the SE. All programming of RTUs and HMI shall be by the SE. The PCSI shall furnish the operating system software and the application software.

D. Auxiliary and accessory devices necessary for system operation or performance to interface with existing equipment or equipment provided by other suppliers under other sections of these specifications, shall be included whether or not they are shown on the drawings. These devices include, but are not limited to, transducers, current isolators, signal conditioners, interposing relays, power supplies, surge protectors, and fiber optic transceivers.

E. Substitution of functions or type of equipment specified shall not be acceptable. In order to ensure parts are interchangeable, maintain quality, interface between the various subsystems, and establish minimums with regard to ranges and accuracy, strict compliance with the above requirements shall be maintained. System design shall allow for the removal of individual devices from service without disrupting other devices in service.

F. Equipment shall be fabricated, assembled, installed, and placed in proper operating condition in full conformity with detail drawings, specifications, engineering data, instructions, and recommendations by the equipment manufacturer as approved by the Engineer.

G. The PCSI shall be responsible for calibrating all instruments that will interface with the control system.

H. To facilitate the Owner's future operation and maintenance, products shall be by the same major manufacturer, with panel-mounted devices of the same type and model as far as possible.

I. In existing facilities, where improvements take place, all work shall be coordinated with operating personnel to minimize impact. Specifically, the contractor shall be responsible for providing a detailed daily plan to demonstrate how the plant will be modified so that there is no operational down time experiened. This plan shall be a submitted for review and approval before any work is started on site. The actual sequence of the work is left to the contractor, but extensive pre-planning is necessary to accomplish the work. The following criteria must be used by the contractor when developing the PLC Modification Plan:
   1. Work on more than one PLC at a time will not be allowed.
   2. The owner’s personnel will operate all equipment in the station. The contractor shall not operate any City owned equipment. Work to place specific equipment into MANUAL operation must be coordinated with the owner at least 24 hours in advance. In cases where there are no existing devices to place equipment into a constant running operation (i.e. no Hand-Off-Auto switch), then the contractor shall improvise by using temporary wiring.
   3. The PCSI contractor shall use temporary measures to ensure that the flow pacing signals used to meter chemicals are maintained at all times, regardless of which PLCs are out of service.

J. The PCSI must demonstrate that all new equipment and reused existing equipment is connected to PLCs and the new PLC is fully functional as specified and as shown on the Contract Drawings.

K. The Owner shall retain salvage rights to all material and equipment removed in the course of this work. All materials and equipment retained by the Owner shall be delivered to a point designated by the Owner in Houston, Texas. Any materials or equipment not retained by the Owner shall be removed from the site and disposed of by the Contractor in accordance with applicable regulations and laws.

L. All equipment and installations shall satisfy applicable Federal, State, and local codes.

M. The Contract Drawings and related specification sections provide additional details showing building plan layouts, instrument device specifications, functional requirements of the system, and interfacing with other equipment.

N. All materials, equipment, labor, and services necessary to achieve the monitoring and control functions described herein shall be provided in a timely manner so that the monitoring and control functions are available when the equipment is ready to be placed into service.

O. The PCSI shall coordinate and schedule all required testing with the General Contractor, Owner, and Engineer.

P. The PCSI shall coordinate and schedule all required training with the General Contractor, Owner, and Engineer.

Q. The PCSI shall provide a monthly status report and updated project schedule to the General Contractor to be included in the General Contractor's overall project schedule.

1.02 MEASUREMENT AND PAYMENT

A. No separate payment will be provided for work performed under this Section. Include the cost for this work in the lump sum base bid.

B. Refer to Section 01270 – Measurement and Payment.

1.03 RELATED WORK

A. The PCSI shall furnish all materials, labor, and services specified in the following specification sections as required ensuring that a single, coordinated system is supplied:
   1. Section 16195 – Electrical Identification

B. Divisions requiring coordination shall include, but not be limited to, the following:
   1. Division 1 - General Requirements
   2. Division 13 - Special Construction
   3. Division 15 - Mechanical
   4. Division 16 - Electrical

C. The PCSI shall coordinate with all equipment suppliers, mechanical subcontractor, electrical subcontractor, and General Contractor.

1.04 COORDINATION MEETINGS

A. The PCSI shall schedule and administer a minimum of three mandatory coordination meetings. The PCSI shall make arrangements for meetings; prepare agenda with copies to participants at least one week before scheduled meetings. The meetings shall be conducted at DWO's (Drinking Water Operations) EWPP (East Water Purification Plant) and shall include, as a minimum, attendance by the Owner, Engineer, General Contractor's project engineer, PCSI's project engineer, and the electrical subcontractor.
   1. The first coordination meeting shall be held in advance of the first PCSI shop drawing submittal. The purpose of the first meeting shall be for the PCSI to:
      a. Summarize their understanding of the project.

b. Discuss any proposed substitutions or alternatives.
c. Schedule testing and delivery milestone dates.
d. Provide a forum for the PCSI to coordinate hardware and software related issues.
e. Request any additional information required from the Owner and/or Engineer.
f. The PCSI shall bring a draft version of shop drawings to the meeting to provide the basis for the Owner/Engineer's input into their development.

2. The second coordination meeting shall be held after the Field Instruments, Digital System Hardware, and Control Panels and Panel Mounted Equipment shop drawing submittals have been reviewed by the Engineer and returned to the PCSI. The purpose of the second meeting is to:
   a. Discuss comments made on the submittal packages.
   b. Refine scheduled milestone dates.
   c. Coordinate equipment installation activities.
3. The third, last coordination, meeting shall be held one month prior to factory acceptance testing. The purpose of the last coordination meeting is to discuss any remaining coordination requirements.
4. A typical agenda may include, but is not limited to, the following:
   a. Review minutes of previous meetings
   b. Review of work progress
   c. Field observations, problems, and decisions
   d. Identification of problems, which impede planned progress
   e. Review of submittal schedule and submittal status
   f. Review of off-site fabrications and delivery schedules
   g. Maintenance of progress schedule
   h. Corrective measures to regain projected schedules
   i. Planned activities for subsequent work period
   j. Coordination of projected progress
   k. Maintenance of quality and work standards
   l. Effect of proposed changes on progress schedule and coordination
   m. Other business relating to project

B. The PCSI's cost associated with the coordination meetings is the responsibility of the PCSI.

1.05 SUBMITTALS

A. Submit shop drawings in accordance with Section 01300, Submittals. The shop drawings shall fully demonstrate that the equipment and services to be furnished comply with the provisions of these specifications and provide a true and complete record of the equipment as manufactured and delivered. Each submittal shall be securely bound with an index and sectional dividers. All submittal drawings shall be legible and shall be 11 inches x 17 inches.

B. The Engineer shall determine whether a product is an “Approved Equal” based upon the information listed herein and the manufacturer’s data sheets regarding the models specified. Alternate equipment must meet the criteria listed herein and any additional information in the manufacturer’s data sheets in order to be accepted as an “Approved Equal”. Supplier must furnish five working installation references for any alternate equipment along with owner, contact, and telephone number.

C. The submittals listed below shall be provided as a minimum. Other specification sections may require other submittals not listed here. Each submittal must be complete. No partial submittals will be accepted.
   1. System Input/Output List
   2. Project Plan
   3. The project plan shall be submitted and approved before any additional submittals (except I/O List) will be accepted.
   4. Field Instruments
   5. Digital System Hardware
   6. Control Panels and Panel Mounted Equipment
   7. Testing
   8. Training
   9. Loop Diagrams
   10. Spares, Expendables, and Test Equipment
   11. Operation and Maintenance (O&M) Manuals

D. Submittal Descriptions
   1. System Input/Output List
      a. Within 90 days of the contract award, the PCSI shall submit a System Input/Output List submittal containing a complete system Input/Output (I/O) list for equipment connected to the control system under this Contract. The I/O list shall be submitted in a Microsoft Excel electronic file format on a CD ROM and an 8 1/2-inch by 11-inch hard copy. The hard copy list shall be sorted first by ISA tag name and second by I/O type (i.e., AI, AO, DI, DO, etc.). The list shall contain, as a minimum, the following for each active point and spare point:
         1) Tag name
         2) Type of I/O (i.e., DI, DO, AI or AO)
         3) I/O point address (PLC name/address and point address)
         4) Point name (or SPARE)
         5) Point description
         6) High/Low range and engineering units
         7) Alarm limits
         8) Relay normal status contact configuration
         9) I/O terminal point physical location (panel name, rack, slot etc.)
         10) 2-wire or 4-wire instrument.
   2. Project Plan:
      a. The Project Plan shall provide an overview of the proposed system including system architecture drawing, approach to work, proposed work schedule indicating milestones and potential meetings, project personnel and organization, details of factory testing and field testing, and details of training program. The Project Plan shall also include an acknowledgment of conformance to the specification on a paragraph-by-paragraph basis

indicating any proposed deviations. The schedule shall be coordinated with the project execution schedule and illustrate all major project milestones including the following:

1) Schedule for all subsequent project submittals
2) Schedule for all project design review meetings
3) Schedule for manufacture, assembly and staging of all process control system equipment
4) Schedule for all tests
5) Schedule for shipment of all process control system equipment and peripheral devices
6) Schedule for equipment start-up
7) Schedule for all training

3. Existing System Replacement Work Plan
   a. Provide in detail a step-by-step switchover plan from the existing system to the new PC/PLC-based monitoring and control system for the existing plant.
   b. The submittal shall provide the coordination details among Owner, General Contractor, and subcontractors that may be affected by the switchover plan.
   c. The submittal shall include a switchover schedule.
4. Field Instruments
   a. This submittal shall provide complete documentation of all field instruments using ISA-S20 format. A complete Bill of Materials (BOM) listing all instrumentation equipment shall be provided.
   b. Data Sheets
      1) Provide data sheets for each instrument listing model numbers, options, and ancillary devices that are being provided. The data sheets shall be provided with an index, proper identification, and cross-referencing. The data sheets shall include, but not be limited to, the following information:
      2) Plant Equipment Number and ISA tag number per the Loop Diagrams
      3) Product (item) name used herein and on the Contract Drawings
      4) Manufacturer's complete model number
      5) Location of the device
      6) Input output characteristics
      7) Range, size, and graduations
      8) Physical size with dimensions, enclosure NEMA classification and mounting details
      9) Materials of construction of all components
      10) Instrument sizing calculations where applicable
      11) Certified calibration data for all flow metering devices
   c. Equipment Specification Sheets
      1) Provide equipment specification sheets, which, shall fully describe the device, the intended function, how it operates and its physical environmental and performance characteristics. Each data sheet shall have appropriate cross references to loop or equipment identification tags. As a minimum the specification sheets shall include the following:
         a) Dimension, rigid clearances

b) Mounting or installation details
c) Connection
d) Electrical power or air requirements
e) Materials of construction
f) Environmental characteristics
g) Performance characteristics
h) Complete information regarding the field instruments as required by ISA-S5.4 standards shall be provided under this contract.

5. Digital System Hardware
   a. This submittal shall provide complete documentation of the proposed hardware (PLC's, RIO's, computers, communication equipment, cables, peripherals, etc.) A complete BOM listing all digital hardware equipment shall be provided.
   b. The submittal shall include the following:
      1) System Block Diagram. A complete schematic system block diagram(s) showing the interconnections between major hardware components including, but not limited to:
         a) Control centers
         b) Panels
         c) Power supplies
         d) Consoles
         e) Computer and peripheral devices
         f) Telemetry equipment
         g) Local digital processors and like equipment
         h) Surge Protetion
         i) Fuses on Analog loops
         j) Radio connection to control systems
      2) The block diagram shall reflect the total integration of all digital devices in the system and any human machine interface (HMI) locations. Location of all components shall be clearly identified with appropriate cross-references.
      3) The diagram shall reference all interconnecting cabling requirements for digital components of the system including any data communication links.
   c. Data Sheets
      1) A data sheet for each hardware component listing all model numbers, options, auxiliary and ancillary devices that are being provided.
      2) The data sheets shall be provided with an index, proper identification, and cross-referencing. They shall include, but not be limited to, the following information:
         a) Equipment Number and ISA tag number.
         b) Product (item) name used herein and on the Contract Drawings.
         c) Manufacturer's complete model number.
         d) Location of the device.
         e) Input/output characteristics.
         f) Range, size, and graduations.
         g) Physical size with dimensions, enclosure NEMA classification and mounting details.
         h) Materials of construction of all components.

i) Power supply device sizing calculations where applicable.

d. The Digital System Hardware submittal shall also contain all planning information, site preparation instructions, grounding and bonding procedures, cabling diagrams, plug identifications, safety precautions or guards, and equipment layouts in order to enable the General Contractor to proceed with the detailed site preparation for all equipment.

6. Control Panels and Panel Mounted Equipment
   a. This submittal shall provide complete documentation of all panel instruments, control panels, and control equipment not submitted elsewhere. A complete BOM listing all instrumentation and control equipment shall be provided.
   b. Provide data sheets for each component listing all model numbers, options, and ancillary devices that are being provided. The data sheets shall be provided with an index, proper identification, and cross-referencing. The data sheets shall include, but not be limited to, the following information:
      1) Plant Equipment Number and ISA tag number.
      2) Product (item) name used herein and on the Contract Drawings.
      3) Manufacturer's complete model number.
      4) Location of the device.
      5) Input - output characteristics.
      6) Range, size, and graduations.
      7) Physical size with dimensions, enclosure NEMA classification and mounting details.
      8) Materials of construction of all components.
      9) Panel instrument or control device sizing calculations where applicable.
   c. Provide equipment specification sheets, which shall fully describe the device, the intended function, how it operates, and its physical environmental and performance characteristics. Each equipment specification sheet shall have appropriate cross references to loop or equipment identification tags with model number and information pertaining to the item highlighted. As a minimum the specification sheets shall include the following:
      1) Dimension, rigid clearances
      2) Mounting or installation details
      3) Connection
      4) Electrical power or air requirements
      5) Materials of construction
      6) Environmental characteristics
      7) Performance characteristics
   d. Provide detailed drawings covering control panels, consoles and/or enclosures, which shall include:
      1) Cabinet assembly and layout drawings to scale. Drawings shall include both front and interior subpanel layouts.
      2) Material, fabrication, and painting specifications
      3) Color selection samples for selection by the Engineer

4) Where graphic display panels are required, submit detailed layouts to scale, including symbols and line widths, as well as color selection samples and details of fabrication. Half-scale layouts shall be acceptable.
5) Panel wiring diagrams showing all power connections to equipment within and on the panel, combined panel power draw requirements (volts, amps), breaker sizes, fuse sizes, and grounding. This wiring diagram shall be in ladder logic format and shall reference the appropriate loop drawing for continuations or details where required. Show all wire numbers and terminal block designations.

e. The submittal shall also contain all planning information, site preparation instructions, grounding and bonding procedures, cabling diagrams, plug identifications, safety precautions or guards, and equipment layouts in order to enable the General Contractor to proceed with the detailed site preparation for all equipment.
f. The submittal shall also include heat dissipation calculations for each enclosure.

7. Testing (The PCSI shall invite City personnel to all tests)
   a. A test plan shall be submitted after the Owner and/or Engineer have approved all hardware submittals. The test plan shall demonstrate that the PCSI has designed and configured a system that meets the design specifications. The test plan shall be submitted prior to the preparation of the detailed test procedures and submit outlines of the specific proposed tests. Submittals shall include examples of the proposed forms and checklists.
   b. The system shall be tested using the system architecture drawing and a Bill of Materials of all hardware indicating manufacturer, model, and serial number. The documents for the test plan shall be structured so that the Engineer understands what the inputs are, what the predicted outputs should be and what the actual outputs are. The test plan shall have a sign off and date block for the PCSI, General Contractor, Owner, and Engineer.
   c. The test plan should include the following as a minimum:
      1) A BOM listing control system components' manufacturer, model and serial number.
      2) System hardware summary.
      3) A testing schedule describing the specific tasks to be performed and the time allotted for each task.
      4) Communications tests to the various PLCs for discrete and analog I/O data transfer.
      5) 100 percent I/O point test including all spare points based upon the previously submitted system I/O list.
   d. Test procedures shall be submitted after the test plan submittal has been reviewed by the Engineer and returned stamped either Approved or Approved as Noted, Confirm. The submittal shall document the proposed procedures to be followed during the test. Procedures shall include test descriptions, forms, and checklists to be used to control and document the required tests. Testing shall not be started until all Testing Submittals have been approved.

e. For Test Documentation, submit a copy of the signed off test procedures upon completion of each required test.

8. Training (Include City Plant Operators who will operate the plant via the HMI)
   a. Submit an overview of the proposed training plan. Each proposed course shall include:
      1) An overview of the training plan explaining why specific courses are proposed.
      2) Course title and objectives.
      3) Prerequisite training and experience of attendees.
      4) Recommended attendees.
      5) Course Content - A topical outline.
      6) Course Duration.
      7) Course Location - Training center or jobsite.
      8) Course Format - Lecture, laboratory demonstration, etc.
   b. The Engineer shall review the preliminary training plan submittal with the Owner.
   c. Upon receipt of the Owner's and Engineer's comments on the preliminary training plan, submit the specific proposed training plan. The training plan shall include:
      1) Definition of each course.
      2) Specific course attendance.
      3) Schedule of training courses including dates, duration, and location of each class.
      4) Resumes of the instructors who will actually conduct the training.
9. Loop Diagrams
   a. Provide detailed loop diagrams on single 11 inches x 17 inches or 8.5 inches x 11 inches sheets for each monitoring or control loop. The submittal shall also be submitted in electronic format on a flash drive. The loop diagrams shall show all components of the loop both analog, digital, and discrete including all relays, switches, dropping resistors, etc. which are being provided for proper operation. Loop numbers used shall correspond to the loop numbers indicated in the contract documents. The format shall be the Instrument Society of America, Standard for Instrument Loop Diagrams, ISA-S5.4, and the following requirements:
      1) On each diagram present a tabular summary of:
         a) The output capability of the transmitting instrument
         b) The input impedance of each receiving instrument
         c) Estimate of the loop wiring impedance based on wire sizes and approximate length used
         d) The total loop impedance
         e) Reserve output capacity
      2) Show all interconnecting wiring between equipment, panels, terminal junction boxes and field mounted components. The diagrams shall show all components and panel terminal board identification numbers and all wire numbers. This diagram shall include all intermediate terminations between field elements and panels (e.g., terminal junction boxes). The diagrams shall be coordinated with the electrical contractor and bear mark showing this has been done.
      3) Show location of all devices

4) Show instrument description showing type, manufacturer, model number, range, setpoints, and operation (e.g., fail open, open on energization, normally closed, etc.) as applicable.
5) Show all instrument loop power or instrument air requirements back to termination on terminal block or bulkhead, fuse blocks (including fuse size), etc., as applicable.
6) Show all grounding points within cabinets and panels and identify the connection point of individual components.
7) Complete information regarding the field instruments as required by ISA-S5.4 standards shall be provided on the loop diagrams under this contract.

10. Spares, Expendables, and Test Equipment
    a. This submittal shall include the following for each Subsystem:
        1) A list of, and descriptive literature for, spares, expendables, and test equipment as specified in Instrumentation Sections.
        2) A separate list of, and descriptive literature for, additional spares, expendables, and test equipment recommended by the PCSI
        3) Unit and total cost for the additional spare items recommended for each subsystem
        4) Storage instructions for all spare parts
        5) Any specialty software or hardware tools used during configuration of the project. NOTE: These specialty tools must be turned over to the Owner.
11. Operation and Maintenance (O & M) Manuals:
    a. Provide O & M Manuals per section 13300-1.12.
    b. The submittal shall also be submitted in electronic format on a CD-ROM.

1.06 REFERENCE STANDARDS

A. American Society for Testing and Materials (ASTM).
   1. ASTM A269 - Standard Specification for Seamless and Welded Austenitic Stainless Steel Tubing for General Service.

B. Instrument Society of America (ISA)
   1. ISA S5.2 - Binary Logic Diagrams for Process Operations
   2. ISA S5.3 - Graphic Symbols for Distributed Control/Shared Display Instrumentation Logic and Computer Systems.
   3. ISA S5.4 - Instrument Loop Diagrams

C. American National Standards Institute (ANSI)
   1. ANSI X3.5 - Flowchart Symbols and Their Usage in Information Processing

D. National Electrical Manufacturers Association (NEMA)

E. Where reference is made to one of the above standards, the revision in effect at the time of bid opening shall apply.

1.07 PCSI QUALIFICATIONS

A. The PCSI shall perform all work necessary to select, furnish, configure, customize, debug, install, connect, calibrate, and place into operation all hardware and software specified within this specification and other related divisions of this specification.

B. The PCSI shall be a "systems house" regularly engaged in the design and installation of computer systems and their associated subsystems as they apply to the municipal water or wastewater industry. For the purposes of this specification section, a "systems house" shall be interpreted to mean an organization that complies with all of the following criteria:
   1. Employs a Texas Registered Professional Control Systems Engineer or Texas Registered Professional Electrical Engineer to supervise or perform the work required by this specification section.
   2. Employs personnel on this project who have successfully completed a manufacturer's training course on the configuration and implementation of the specific programmable controllers, computers, and software proposed for this project.
   3. Has performed work of similar or greater complexity on at least three projects within the last five years and has implemented and completed at least one of the three projects with the proposed HMI software.
   4. Has been in the water/wastewater industry performing the type of work specified in this specification section for a minimum of five continuous years.

C. The PCSI shall maintain a fully equipped office/production facility with full time employees capable of fabricating, configuring, installing, calibrating, troubleshooting, and testing the system specified herein. Qualified repair personnel shall be available and capable of reaching the facility within 24 hours.

D. Actual installation of the system need not be performed by the PCSI's employees; however, the PCSI shall provide the onsite technical supervision of the installation.

E. The PCSI shall furnish equipment which is the product of one manufacturer to the maximum practical extent. Where this is not practical, all equipment of a given type shall be the product of one manufacturer.

F. The General Contractor must select a pre-approved PCSI from the list below. Only pre-approved PCSI companies are accepted.

BL Technology, Inc. 13171 Misty Willow Drive Houston, TX, 77070 Attn: Robert Lee Phone: 281-970-8191	Prime Controls, LP 10400 Westoffice, Suite 105 Houston, TX 77042 Attn: Mike Whitman Phone: 713-244-9747

Boyer Inc.
8904 Fairbanks N. Houston
Houston, TX 77064
Attn: Stacy Jordan
Phone: 713-466-5395
MCC Weimar

Texas Industrial Control Manufacturing
27331 Robinson Rd.
Conroe, Texas 77385
Attn: Storm Ruffin
Phone: 281-296-8300

Weimar Manufacturing
505 South Eagle Street
Weimar, TX 78962
Attn: Frank Macaulay
Phone: 979-725-8527

G. Being listed in this specification section does not relieve any potential PCSI from meeting the qualifications specified in this section.

H. Listed PCSI companies are not required to submit a qualification proposal. Companies interested in being pre-approved as a PCSI, shall submit three (3) copies of a qualification proposal to the Engineer no later than two weeks before the bid opening date. Additional pre-approved PCSI companies will be listed by Addendum no later than seven (7) days before the bid opening date.
   1. The qualification proposal shall provide details and a description of how the supplier proposes to fulfill the requirements set forth in this Specification. The supplier shall present the proposal in sufficient detail so that proper evaluation regarding the experience and capabilities of the supplier can be performed.
      a. The proposal shall contain evidence that the supplier has sufficient financial resources to meet the obligations incidental to the performance of the work including available bonding. (This requirement may be provided in the form of a verifiable or certified financial report for the company's latest fiscal year).
      b. The proposal shall contain a list of personnel available for assignment to the responsible positions of Project Manager, Project Engineer, Lead Programmer, Installation Supervisor, and Area Service Representative. Also, include a concise resume of each individual's education, work experience, and accomplishments.
      c. The proposal shall contain the following specific information:
         1) Maintenance services available for hardware and software: Evaluation will be based on the supplier's capability to provide the required routine and emergency services. The supplier's proposal is to describe the capabilities and location of his/her nearest (to job site) service organization. It is the intent of the Specification to obtain all system maintenance services from the supplier. If the supplier intends to subcontract all or portions of the service requirements, it must be stated as such along with the name and address of the organization.

2) Technical validation examples of recently completed and similar scope projects: The supplier shall provide information regarding type, size, complexity, and performance of five (5) systems recently completed, along with names, addresses, and telephone numbers of persons qualified to verify supplier's statements approximate cost of the instrumentation system supplied, project completion date and description. Evaluation shall be based on the similarity of system requirements and supplier's performance.
3) A description of how the supplier plans to execute the various functions and locations where the various portions of the work will be performed, coordinated and managed (e.g., design, engineering, manufacturing, programming, testing and scheduling). The vendor is required to state in his/her proposal those functions, which he/she intends to subcontract to other organizations and include the name, address and capabilities of these organizations.

d. The supplier shall be required to demonstrate a minimum of five (5) years recent, past experience in the design, manufacture and commissioning of instrumentation and control systems of comparable size, type and complexity to the proposed project. The supplier shall be required to have his/her own in house capability to handle complete system engineering, fabrication, and testing.
e. The supplier shall indicate that he/she has in his/her employ capable personnel for detailed engineering, coordination, drafting, procurement and expediting, scheduling, construction, testing, inspection, installation, training start up service for calibration and commissioning and warranty compliance for the period specified.

1.08 DELIVERY, STORAGE AND HANDLING

A. Provide Delivery, Storage, and Handling requirements as specified below:
1. Shipping Precautions:
a. After completion of shop assembly, factory test, and approval, all equipment, cabinets, panels, and consoles shall be packed in protective crates and enclosed in heavy duty polyethylene envelopes or secured sheeting to provide complete protection from damage, dust and moisture. Dehumidifiers shall be placed inside the polyethylene coverings. The equipment shall then be skid mounted for final transport. Lifting rings shall be provided for moving without removing protective covering. Boxed weights shall be shown on shipping tags together with instructions for unloading, transporting, storing, and handling at jobsite.
b. Special instructions for proper field handling, storage, and installation required by the manufacturer for proper protection, shall be securely attached to the packaging for each piece of equipment prior to shipment. The instructions shall be stored in resealable plastic bags or other acceptable means of protection.
c. None of the control equipment shall be shipped to the site until the room(s) are environmentally suitable.

2. Identification:
   a. Each component shall be tagged to identify its location, tag number and function in the system. Identification shall be prominently displayed on the outside of the package.
   b. Each piece of equipment supplied shall have a permanent stainless steel tag firmly attached and permanently and indelibly marked with the instrument tag number, as given in the Drawings.
3. Storage:
   a. Equipment shall not be stored out of doors. Equipment, including in line equipment, shall be stored in dry permanent shelters and adequately protected against mechanical injury. If any apparatus has been damaged, the General Contractor, at his own cost and expense, shall repair such damage. If any equipment has been subject to possible damage by water, it shall be thoroughly dried and put through such tests as directed by the Engineer. Any repair or replacement shall be at the cost and expense of the General Contractor.

1.09 PROJECT/SITE REQUIREMENTS

A. Environmental Requirements. Air-conditioned areas require NEMA Type 12 ventilated enclosures. All other areas require NEMA Type 4X Type 316 stainless steel enclosures. **All instrumentation enclosures and all instruments mounted outdoors shall be furnished with sun shields.**

B. Elevation. Equipment shall be designed to operate at a ground elevation of approximately 1500 feet above mean sea level.

C. Temperature. Indoor areas' equipment shall be suitable for 10 to 35 C degrees ambient. Outdoor areas' equipment shall be suitable for 30 to 50 C degrees ambient. Storage temperatures shall range from zero to 50 C degrees ambient. Additional cooling or heating shall be furnished if required by the equipment.

D. Relative Humidity. Air-conditioned area equipment shall be suitable for 20 to 95 percent relative, non condensing humidity. All other equipment shall be suitable for 0 to 100 percent relative, condensing humidity.

E. Power Supply. 120 volts AC sources of electric supply shall be unregulated industrial panel boards.

1.10 MAINTENANCE

A. Spare Parts
   1. Spare parts shall be as defined in the related specification sections. All spare parts shall be new and unused.
   2. All spare parts shall be individually packaged and labeled.
   3. Provide one (1) one quart container of each type and color paint used for all cabinets, panels, consoles, etc., supplied under the related specification sections.

4. The spares listed above shall be packed in a manner suitable for long term storage and shall be adequately protected against corrosion, humidity, and temperature.

1.11 WARRANTY

A. Provide equipment warranties per Section 00700, General Conditions, and herein.

1.12 O & M MANUALS

A. Prior to final acceptance of the system and owner training, operating and maintenance manuals covering instruction and maintenance on each type of equipment shall be furnished in accordance with Section 01730, Operating and Maintenance Data.

B. The instructions shall be bound in three ring binders with Drawings reduced or folded for inclusion and shall provide the following as a minimum:
   1. A comprehensive index
   2. A complete labeled "As Constructed" set of approved shop Drawings
   3. A complete list of the equipment supplied, including serial numbers, ranges, and pertinent data
   4. Full specifications for each item
   5. System schematic drawings labeled “As Constructed,” illustrating all components, piping and electrical connections of the systems supplied under this Section
   6. Detailed service, maintenance, and operation instructions for each item supplied
   7. Special maintenance requirements particular to this system clearly defined, along with special calibration and test procedures
   8. Operating instructions which incorporate a functional description of the entire system, with references to the systems schematic Drawings and instructions
   9. Complete parts lists with stock numbers and name, address, and telephone number of the local supplier

C. The final documentation shall be new documentation written specifically for this project, but may include standard and modified standard documentation. Modifications to existing hardware or software manuals shall be made on the respective pages or inserted adjacently to the modified pages. All standard documentation furnished shall have all portions that apply clearly indicated. All portions that do not apply shall be lined out.

D. The manuals shall contain all illustrations, detailed drawings, wiring diagrams, and instructions necessary for installing, operating, and maintaining the equipment. The illustrated parts shall be numbered for identification. All information contained therein shall apply specifically to the equipment furnished and shall only include instructions that are applicable. All such illustrations shall be incorporated within the printing of the page to form a durable and permanent reference book.

E. If the PCSI transmits any documentation or other technical information, which he considers proprietary, such information shall be designated. Documentation or technical information which is designated as being proprietary will be used only for the design, construction, operation, or maintenance of the system and, to the extent permitted by law, will not be published or otherwise disclosed.

F. The final documentation requirements are as follows:
   1. As-built documentation shall include all previous submittals, as described in this Specification, updated to reflect the as built system. Any errors in or modifications to the System resulting from the Factory and/or Field Acceptance Tests shall be incorporated in this documentation.
   2. The Hardware Maintenance documentation shall describe the detailed preventive and corrective procedures required to keep the System in good operating condition. Within the complete Hardware Maintenance documentation, all hardware maintenance manuals shall make reference to appropriate diagnostics, where applicable, and all necessary timing diagrams shall be included. A maintenance manual or a set of manuals shall be furnished for all delivered hardware, including peripherals. The Hardware Maintenance documentation shall include, as a minimum, the following information:
      a. Operation Information - This information shall include a detailed description of how the equipment operates and a block diagram illustrating each major assembly in the equipment.
      b. Preventive Maintenance Instructions - These instructions shall include all applicable visual examinations, hardware testing, diagnostic routines, and the adjustments necessary for periodic preventive maintenance of the System.
      c. Corrective Maintenance Instructions - These instructions shall include guides for locating malfunctions down to the card replacement level. These guides shall include adequate details for quickly and efficiently locating the cause of an equipment malfunction and shall state the probable source(s) of trouble, the symptoms, probable cause, and instructions for remedying the malfunction.
      d. Parts Information - This information shall include the identification of each replaceable or field repairable module. All parts shall be identified on a list in a drawing; the identification shall be of a level of detail sufficient for procuring any repairable or replaceable part. Cross references between the Instrumentation System Supplier's part number and manufacturer's part numbers shall be provided.
      e. System Backup/Restore - This information shall include a detailed description of the procedure for backing up the computer system (including PC and PLC); reloading using a backup; and completely restoring a PC and/or PLC from a backup.

1.13 PROGRAMMING

A. Schedule a meeting with DWO’s SCADA group and the SE to discuss the PLC programming philosophy for the project.

B. The SE shall program PLCs to reflect the philosophy provided by DWO's SCADA group.

C. Schedule a meeting with DWO's SCADA group and the SE to review programming.

D. After new PLCs are operational, schedule a meeting with DWO's SCADA group and the SE to review operation of PLCs.

PART 2 PRODUCTS

2.01 GENERAL

A. Process Control System:
1. All instrumentation supplied shall be of the manufacturer's latest design and shall produce or be activated by signals that are established standards for the water and wastewater industries.
2. All electronic instrumentation shall be of the solid state type and shall utilize linear transmission signals of 4 to 20 mA DC (milliampere direct current), however, signals between instruments within the same panel or cabinet may be 1-5V DC (volts direct current), or the like.
3. Output of equipment not of the standard signals as outlined, shall have the output immediately raised and/or converted to compatible standard signals for remote transmission. No zero-based signals will be allowed.
4. All instruments shall be provided with mounting hardware, floor stands, wall brackets, or instrument racks as shown on the Drawings or as required.
5. Equipment installed in a hazardous area shall meet Class, Group, and Division as shown on the Electrical Drawings, to comply with the National Electrical Code.
6. All indicators and recorder readouts shall be linear in process units, unless otherwise noted.
7. All transmitters shall be provided with either integral indicators or conduit mounted indicators in process units, accurate to two percent (2%).
8. Electronic equipment shall be of the manufacturer's latest design, utilizing printed circuitry and suitably coated to prevent contamination by dust, moisture and fungus. Solid state components shall be conservatively rated for their purpose to assure optimum long-term performance and dependability over ambient atmosphere fluctuations and 0 to 95% percent relative humidity. The field mounted equipment and system components shall be designed for installation in dusty, humid, and slightly corrosive service conditions.
9. All equipment, cabinets, and devices furnished hereunder shall be heavy duty type, designed for continuous industrial service. The system shall contain products of a single manufacturer, insofar as possible, and shall consist of equipment models that are currently in production. All equipment provided shall be of modular construction and shall be capable of field expansion.
10. The field mounted digital system equipment and system components shall be designed for installation in dusty, humid, and corrosive service conditions.
11. All electronic/digital equipment shall be provided with radio frequency interference protection and shall be FCC approved.

B. Electrical
   1. All equipment shall be designed to operate on a 60 Hertz alternating current power source at a nominal 120 volts, plus or minus 10 percent, except where specifically noted. All regulators and power supplies required for compliance with the above shall be provided between power supply and interconnected instrument loop. Where equipment requires voltage regulation, constant voltage transformers shall be supplied.
   2. Panels containing networking equipment and PLC equipment shall be powered by two separate 24VDC power supplies. One pair of redundant 24VDC power supplies shall be furnished for the networking equipment and a separate pair of redundant 24VDC power supplies shall be furnished for loop powered instrumentation devices and PLC equipment.
   3. Materials and equipment used shall be UL approved wherever such approved equipment and materials are available.
   4. All equipment shall be designed and constructed so that in the event of a power interruption, the equipment specified hereunder shall resume normal operation without manual resetting when power is restored.

2.02 LIGHTNING/SURGE PROTECTION

A. Lightning/Surge protection shall be provided to protect the electronic instrumentation system from induced surges propagating along the signal and power supply lines. The protection systems shall be such that the protective level shall not interfere with normal operation, but shall be lower than the instrument surge withstand level, and be maintenance free and self-restoring. Instruments shall be housed in a suitable metallic case, properly grounded. Ground wires for all surge protectors shall be connected to a good earth ground, and where practical, each ground wire run individually and insulated from each other. These protectors shall be mounted within the instrument enclosure or a separate NEMA 4 junction box coupled to the enclosure.

B. Either a two or three-stage protection circuit, depending on the application, shall furnish I/O protection.

C. All wiring, hardware, and connection means shall comply with the National Electric Code and/or applicable local codes.

D. All suppressors shall have integral mounting brackets to attach 35mm DIN rail conforming to DIN EN50022, with the exception of conduit mounted devices.

E. The suppressor shall be mounted as close to the equipment it is protecting as possible.

F. Mounting guidelines will be followed as indicated in installation instruction provided by the manufacturer.

G. Wires shall be attached to the suppressor by means of a cable-clamping terminal block activated by a screw. Connections shall be gas-tight, and the terminal block shall be fabricated of non-ferrous, non-corrosive materials.

H. All wiring points and plug connections shall be “touch safe” with no live voltages that can make contact with a misplaced finger in accordance with IEC 529.

I. Analog and discrete and data protection DIN rail mounted, pluggable devices shall meet the following.
   1. Surge suppression modules for 24V and 110V circuits shall be UL listed or recognized.
   2. Surge protection shall consist of a multistage hybrid circuit with staging inductors or resistors to properly coordinate the components.
   3. DIN rail mounted surge protection modules shall consist of two parts; a base terminal block and a plug protection module. Replacing a plug shall not require the removal of any wires nor shall it interrupt the signal. Base and plug shall have the ability to be coded to accept only the correct voltage plug.
   4. Surge protection for analog or discrete I/O shall be designed to withstand a maximum 10 kA test current of a 8/20 microsecond waveform according to IEC 1024 Application Guide A and ANSI/IEEE C62.41 Category C Area.
   5. Surge protection for hazardous area locations will conform to EN 50 020/DIN EN 50 020/VDE 0170/0171 part 7: 1996-04. Surge protection for hazardous areas shall have at least 500V isolation between intrinsic safety ground and earth ground.
   6. Both plugs and bases shall have a rating of IP20 according to IEC 529. Bases shall have an integral label holder to mark each terminal block.
   7. Operating temperature range shall be at least -40°C to +80°C.
   8. Bases shall include metal mounting foot, which provides ground connection to DIN-rail.
   9. Manufacturers:
      a. Analog: Phoenix Contact model series PT 2 x 2. One plug and base required for two analog loops. Discrete 5-24V: Phoenix Contact model series PT 4 x 1. One plug and base required for every four discrete signals. Discrete 60-230V: Phoenix Contact model series PT 2 x 1 VA. One plug and base required for every two discrete signals.
      b. Dehn, with models to match the Phoenix Contact device ratings.
      c. Approved Equal.

J. Analog and discrete DIN rail mounted, non-pluggable, high density devices shall meet the following
   1. Surge protection shall consist of a multistage hybrid circuit with staging inductors or resistors to properly coordinate the components. Series resistance shall not exceed 4.7 ohms (+/- 10%).
   2. DIN rail mounted surge protection housing width shall not exceed 6.2mm.
   3. Surge protection for analog and digital I/O shall be designed to withstand a 5 kA test current of a (8/20)s waveform according to IEC 1024 Application Guide A and ANSI/IEEE C62.41 (Line to Ground). Surge handling capability of Line 1 + Line 2 shall be 10 kA of (8/20)s waveform.
   4. Operating temperature range shall be at least -40C to +85C.
   5. Maximum load current through the surge protection module shall not exceed 250 milliamps for analog and digital signal protection.
   6. Cutoff frequency for analog modules shall be 3 MHz for a 50-ohm system and 1 MHz for a 150-ohm system. Cutoff frequency for digital modules shall be 2 MHz for a 50-ohm system and 600 KHz for a 150-ohm system.

7. Wire size range shall between 24 and 14 AWG.
8. Ex-I modules shall contain only diode and gas tube (no MOV) and shall be isolated from ground by 500VDC as required by EN 50 020.
9. Manufacturers
   a. Phoenix Contact model series TT-2-PE-24DC, TT-2/2-24DC, or TT-EX(I)-24DC. Phoenix Contact model series PT 2 x Ex(I)-24DC. One plug and base required for two analog loops or four discrete signals.
   b. Dehn, with models to match the Phoenix Contact device ratings.
   c. Approved Equal.

K. Analog Signals (Conduit Mounted)
1. Surge protection shall consist of a multistage hybrid circuit utilizing only diodes and gas discharge tubes but no metal oxide varistors (MOVs).
2. Surge protection for analog and digital I/O shall be designed to withstand a 10 kA test current of a (8/20) µs waveform according to IEC 1024 Application Guide A and ANSI/IEEE C62.41 Category C Area.
3. Surge protection shall not have more than 10 ohms of series resistance.
4. Surge protection shall have a response time less than 1µs.
5. Maximum operating voltage shall not exceed 28 VDC.
6. Surge protection shall not have a cutoff frequency less than 400kHz (for a 600 ohm system) to allow HART protocol and other superimposed smart digital signals to function.
7. Surge protection module shall have an operating temperature range of at least -40°C to +65°C.
8. Maximum load current through the surge protection module shall not exceed 250 mA.
9. Manufacturers:
   a. Phoenix Contact model series PIPETRAB. Protection circuit is mounted in 3/4" stainless steel pipe nipple.
   b. Dehn, with models to match the Phoenix Contact device ratings.
   c. Approved Equal.

PART 3 EXECUTION

3.01 GENERAL INSTALLATION

A. The process control system, instrumentation, and accessory equipment shall be installed in accordance with the manufacturer's instructions. The locations of equipment, transmitters, alarms, and similar devices shown on the drawings are approximate only. Exact locations shall be as approved by the Engineer during construction. All information relevant to the placing of process control work shall be obtained in the field. In case of any interference with other work, proceed as directed by the Engineer and furnish all labor and materials necessary to complete the work in an approved manner.

B. Two complete sets of approved shop drawings shall be kept at the job site during all on site construction. Both sets shall be marked up identically to reflect any modifications made during field installation or start up. All markings shall be verified and initialed by the Engineer or his designated representative.

C. Following completion of installation and the Operational Readiness Test, one set of the marked up drawings shall be provided to the Engineer; the other set shall be retained by the Supplier for incorporation of the mark ups into final as built documentation.

D. The instrumentation installation details on the Contract Drawings indicate the designed installation for the instruments specified. Where specific installation details are not specified or shown on the Drawings, the American Petroleum Institute (API) Recommended Practice 550 shall be followed as applicable.

E. All work shall be executed in full accordance with codes and local rulings. Should any work be performed contrary to said rulings, ordinances and regulations, the General Contractor shall bear full responsibility for such violations and assume all costs arising therefrom.

F. All equipment used in areas designated as hazardous shall be designed for the Class, Group, and Division as required on the Electrical Drawings for the locations. All work shall be in strict accordance with codes and local rulings. Should any work be performed contrary to said rulings, ordinances and regulations, the Supplier shall bear full responsibility for such violations and assume all costs arising therefrom.

G. Unless specifically shown in the Contract Drawings, direct reading or electrical transmitting instrumentation shall not be mounted on process piping. Instrumentation shall be mounted on instrument racks or stands as detailed on the installation detail drawings or an Engineer approved equal mounting rack or stand. All instrumentation connections shall be provided with shutoff and drain valves. For differential pressure transmitters, valve manifolds for calibration, testing, and blow down service shall also be provided. For slurries, chemical or corrosive fluids, inline diaphragm seals shall be provided.

H. All piping to and from field instrumentation shall be provided with necessary unions, test tees, couplings, adapters, and shut off valves.

I. Field instruments that require power supplies shall be provided with local electrical shutoffs and fuses as required.

J. Brackets and hangers required for equipment mounting shall be provided and shall be installed in a workmanlike manner and not interfere with any other equipment.

K. The shield on each process instrumentation cable shall be continuous from source to destination and be grounded at the source end as directed by the manufacturer of the instrumentation equipment. In no case shall there be more than one ground point for each shield.

L. Lifting rings shall be removed from cabinets/assemblies. Hole plugs the same color as the cabinet shall be provided for the holes.

M. The PCSI, acting through the General Contractor, shall coordinate the installation, the placing and location of system components, and their connections to the process equipment panels, cabinets and devices, subject to the Engineer's approval. The PCSI shall be responsible for ensuring that all field wiring for power and signal circuits is done correctly in accordance with best industry practice and provide for all necessary system grounding to ensure a satisfactory functioning installation. The General Contractor hereunder shall schedule and coordinate his work under this Section with that of the electrical work specified under applicable Sections of Division 16.

N. The PCSI shall provide service by the PLC service representative to verify that the entire PLC system is installed per the manufacturer's requirements. The PCSI shall supply certified copies of all the tests/field reports supplied by the PLC service representative to the Owner for their records.

O. The PCSI shall provide service by a factory-trained representative to verify that the entire local area network (LAN) is installed per the manufacturer’s requirements. The PCSI shall include in his bid the cost of the factory trained representative to inspect all LAN terminations and the cost of testing the LAN to verify that it is installed and operating correctly (e.g., data being transferred from node to node, no excessive timeouts, minimal collisions, etc.) The PCSI shall provide certified copies of all tests and legible copies of all field reports generated by the factory-trained representative to the Owner for their records.

3.02 TESTS (GENERAL)

A. The PCSI shall test all equipment at the factory prior to shipment. Unless otherwise specified in the individual specification sections, all equipment provided by the PCSI shall be tested at the factory as a single fully integrated system.

B. As a minimum, the testing shall include the following:
   1. Unwitnessed Factory Test (UFT).
   2. Functional Demonstration Test (FDT).

C. Each test shall be in the cause and effect format. The person conducting the test shall initiate an input (cause) and, upon the system's or subsystem's producing the correct result (effect), the specific test requirement shall be satisfied.

D. All tests shall be conducted in accordance with prior Engineer approved procedures, forms, and checklists. Each specific test shall be described and followed by a section for sign off by the appropriate party after its satisfactory completion.

E. Copies of these sign off test procedures, forms, and checklists will constitute the required test documentation.

F. Provide all special testing materials and equipment. Whenever possible, perform tests using actual process variables, equipment, and data. When it is not practical to test with real process variables, equipment, and data, provide suitable means of simulation. Define these simulation techniques in the test procedures.

G. The General Contractor shall require the PCSI to coordinate all testing with the Engineer, all affected Subcontractors, and the Owner.

H. The Engineer reserves the right to test or retest all specified functions whether or not explicitly stated in the prior approved Test Procedures.

I. The Engineer's decision shall be final regarding the acceptability and completeness of all testing.

J. No equipment shall be shipped until the Engineer has received all test results and approved the system.

K. The PCSI shall furnish servicemen and all special calibration and test equipment to perform the field tests.

L. Correction of Deficiencies
   1. All deficiencies in workmanship and/or items not meeting specified testing requirements shall be corrected to meet specification requirements at no additional cost to the Owner.
   2. Testing, as specified herein, shall be repeated after correction of deficiencies is made until the specified requirements are met. This work shall be performed at no additional cost to the Owner.

3.03 UNWITNESSED FACTORY TESTS (UFT)

A. The entire system, except primary elements, final control elements, and field mounted transmitters, shall be interconnected and tested to ensure the system operates as specified. All analog and discrete input/output points not interconnected at this time shall be simulated to ensure proper operation of all alarms, monitoring devices/functions, and control devices/functions. All process control strategies shall be simulated to ensure proper operation according to approved shop drawing.

B. All panels and assemblies shall be inspected and tested to verify that they are in conformance with related submittals, specifications, and Contract Drawings.

C. During the tests all digital system hardware and software shall have operated continuously for five days without a failure to verify the system is capable of continuous operation. The unwitnessed factorytest results shall be submitted to the Engineer for approval prior to the start of the Functional Demonstration Test (FDT).

3.04 FUNCTIONAL DEMONSTRATION TEST (FDT)

A. Prior to startup, the entire installed instrument and control system shall be certified that it is ready for operation. All preliminary testing, inspection, and calibration shall be complete. The FDT will be a test by the PCSI.

B. Once the facility has been started up and is operating, a witnessed FDT shall be performed on the complete system to demonstrate that it is operating and in compliance with these Specifications. Each specified function shall be demonstrated on a paragraph-by-paragraph, loop-by-loop, and site-by-site basis.

C. Loop-specific and non-loop-specific tests shall be the same as specified under WFT except that the entire installed system shall be tested and all functionality demonstrated.

D. Updated versions of the documentation specified to be provided during the factory tests shall be made available to the Engineer at the job-site both before and during the tests. In addition, one copy of all O&M Manuals shall be made available to the Engineer at the job-site both before and during testing.

E. The daily schedule specified to be followed during the factory tests shall also be followed during the FDT.

F. The system shall operate for 100 continuous hours without failure before this test shall be considered successful.

G. Demonstrate communication failure and recovery

H. Demonstrate total power failure and recovery. NOTE: The UPS shall be removed for this test.

I. Demonstrate a catastrophic failure and recovery of a workstation and a RTU (PLC).

J. Demonstrate procedure for backing up the workstation, and RTU (PLC); reload using a backup; and completely restore a workstation and RTU (PLC) from a backup.

K. The PCSI shall invite City SCADA, Electrical and Operations personnel to attend, witness and participate in the FDT.

L. The PCSI shall provide a documented test plan for the FDT. The test plan shall be submitted 60 days prior to testing. City SCADA, Electrical and Operations personnel shall provide comments on the test plan to the City's Project Manager. The PCSI shall incorporate City comments into the test plan and resubmit the test plan.

M. If City personnel determine the FDT is not successful, the PCSI shall repeat the FDT until the FDT is approved by the City.

3.05 TRAINING

A. General
   1. The cost of training programs for the Owner's personnel shall be included in the Contract price. Where practical, the training and instruction shall be directly related to the system being supplied. The training shall be provided based on time and not courses to allow the Owner the flexibility to utilize the training time at his discretion.
   2. Training shall be conducted at the Owner's facilities.

3. All Technicians, Operators, Engineers, and Managers of the Facility shall require training on the Process Control System (PCS). The training courses shall address operation, maintenance, and troubleshooting of the system provided. The courses shall be designed specifically for the type of personnel attending, such as Operators, Engineers, etc.
4. All training schedules shall be coordinated with, and at the convenience of, the Owner. Shift training may be required to correspond to the Owner's working schedule.
5. Provide detailed training manuals to supplement the training courses. The manuals shall include specific details of equipment supplied and operations specific to the project.
6. The trainer shall make use of teaching aids, manuals, slide/video presentations, etc. After the training services, all training materials shall be delivered to Owner.

END OF SECTION

SECTION 13321

FIBER OPTIC CABLING AND EQUIPMENT

PART 1 GENERAL

1.01 SCOPE OF WORK

A. The Work of this Section includes providing a fiber optic communications infrastructure including, but not limited to, fiber optic cable (FOC), patch panels, terminations, testing, and implementation.

B. The Work includes testing individual fiber cables installed under this Contract, and testing a completed fiber optic communications network.

1.02 MEASUREMENT AND PAYMENT

A. No separate payment will be made for work performed under this Section. Include the cost for this work in the lump sum Base Bid Item.

1.03 RELATED WORK

A. Section 13300 - Process Instrumentation and Control – General Provisions

B. Section 16195 – Electrical Identification

1.04 SUBMITTALS

A. Submit to the Engineer, in accordance with Section 01330 the following:
   1. Catalog Data: Catalog data on fiber-optic cable, termination devices, patch panels, breakout enclosures, splice kits, pigtails, and fan-outs where applicable. Product data sheets shall include the manufacturer's name and catalog number for each item, the manufacturer's descriptive literature, catalog cuts, and any power supply requirements.
   2. Certification of compliance in writing stating the fiber optic cable, anticipated layout, and components are compatible, acceptable for use, and in compliance with these specifications.
   3. Detailed bill of materials for fiber-optic cable, terminations, patch panels, breakout enclosures, splice kits, connectors, pigtails, and fan-outs.
   4. Drawings indicating the locations of all patch panels, termination points, or breakout enclosures.
   5. Catalog data on all testing devices proposed for use plus certifications of accuracy, calibration, and traceability to standards of the National Institute for Standards and Testing.

B. Provide four samples of each type of cable, splice, and connector termination kit. Four samples of a completed example of each type of splice and connector termination shall be submitted.

C. The Fiber Optic System Supplier shall provide a fiber optic power budget for each cable run in excess of 1000 feet. The budget shall include transmitter power, receiver sensitivity, connector losses, cable losses, and a 3 decibel (db)-aging margin. Fiber optic transmission line shall maintain a minimum of 10 db safety margin.

D. Training plan and schedule for fiber optic cable termination training.

E. Test reports.

F. O&M manuals.

1.05 REFERENCE STANDARDS

A. The optical fiber cable shall conform to the latest issue of the following standards documents, which are incorporated by reference into this Section:
   1. Electronics Industries Alliance (EIA)-455: Standard Fiber Optic Test Procedures (FOTPs) Devices.
   2. EIA-598-A: Standard Colors for Color Identification and Coding.
   3. Military Standard MIL-STD-202: Test Methods for Electronic and Electrical Component Parts.
   4. MIL-STD-454: Standard General Requirements for Electronic Equipment.
   5. MIL-STD-810: Environmental Test Methods and Engineering Guidelines.
   6. EIA-568-B.3: Commercial Building Telecommunications Cabling Standard: Optical Fiber Cabling Components.
   7. Insulated Cable Engineers Association (ICEA) 5-83-696: Fiber Optic Premises Distribution Cable (Indoor/Outdoor).
   8. National Electrical Code (NEC) Article 770.
   9. Underwriters Laboratory (UL) 1581 VW-1 - Vertical Tray Cable Flame Test.
   10. UL 1666 - UL Standard for Safety Test for Flame-Propagation Height of Electrical and Optical-Fiber Cables Installed in Vertical Shafts.
   11. National Fire Protection Association (NFPA) 262 - Standard Method of Test for Flame Travel and Smoke of Wires and Cables for Use IN Air-Handling Spaces.
   12. Institute of Electrical and Electronics Engineers IEEE Standard 383 - Flame Retardancy.
   13. Department of Defense Standard (DOD-STD) 1678.
   14. National Electrical Manufacturers Association (NEMA).
   15. Where reference is made to one of the above standards, the revision in effect at the time of bid opening shall apply.

B. All fiber optical cables shall be constructed in accordance with EIA-455, and 100 percent of all optical fibers and jacketing shall meet or exceed the requirements contained in this specification.

1.06 QUALITY ASSURANCE

A. The cable manufacturer shall be International Organization for Standardization (ISO) ISO9001 certified and registered.

B. The fiber optic cabling system materials furnished under this Section shall be provided by Fiber Optic Suppliers who have been providing these types of materials for the past three years. The Fiber Optic Suppliers shall provide personnel capable of providing technical assistance during installation.

C. The installation of fiber optic cabling system materials furnished under this Section shall be performed by an installation Contractor who has been installing these types of materials and systems for the past three years.

D. Supplier shall furnish five working installation references.

E. The Engineer shall determine whether a product is an equal based upon the information listed herein and the manufacturer's data sheets regarding the models specified. Alternate equipment shall meet the criteria listed herein and all additional information in the manufacturer's data sheets in order to be accepted as an equal.

1.07 DELIVERY, STORAGE, HANDLING AND PACKAGING

A. DELIVERY, STORAGE, AND HANDLING
1. The cable shall be packaged in cartons and/or wound on spools or reels. Each package shall contain only one continuous length of cable. The packaging shall be constructed so as to prevent damage to the cable during shipping and handling.
2. When the length of an order requires a large wooden reel, the cable will be covered with a three-layer laminated protective material. The outer end of the cable shall be securely fastened to the reel head so as to prevent the cable from becoming loose in transit. The inner end of the cable shall project into a slot in the side of the reel or into housing on the inner slot of the drum, in such a manner and with sufficient length to make it available for testing.
3. Test tails shall be at least two meters long. The inner end shall be fastened so as to prevent the cable from becoming loose during shipping and installation. Reels shall be permanently marked with an identification number that can be used by the manufacturer to trace the manufacturing history of the cable and fiber.
4. Wooden reels shall be plainly marked to indicate the direction in which it shall be rolled to prevent loosening of the cable on the reel.
5. All fiber optic cables shall be attenuated tested. The attenuation of each fiber shall be provided with each cable reel by the manufacturer.
6. The attenuation shall be measured at 1310 nanometers (nm) and 1550 nm for single-mode fibers and 850 nm and 1300 nm for multimode fiber cables after received on site. The manufacturer shall submit the test results prior to installation of the cable.

B. Packaging
1. The completed cable shall be packaged for shipment on non-returnable wooden reels. It is the responsibility of the Contractor to determine all required cable lengths.
2. Top and bottom ends of the cable shall be available for testing.
3. Both ends of the cable shall be sealed to prevent the ingress of moisture.

4. Each reel shall have a weatherproof reel tag attached identifying the reel and cable. The reel tag shall include the following information:
   a. Cable Number Gross Weight.
   b. Shipped Cable Length in Meters.
   c. Product Number.
   d. Date Cable was Tested.
   e. Cable Length Markings Item Number.

C. Each cable shall be accompanied by a cable data sheet.

1.08 SPARE PARTS AND TEST EQUIPMENT

A. Spare Parts
   1. Provide a minimum five percent spares of Straight Tip (ST) connectors and dust covers, but not less than 25 spare ST style connectors and 40 dust covers.
   2. Provide a minimum five percent spare 36" spare multimode patch cables with connectors (both ends) terminated, but not less than ten 36" spare multimode patch cables with connectors (both ends) terminated.

PART 2 PRODUCTS

2.01 GENERAL MATERIALS

A. Cabinets: cabinets shall be provided as indicated on the Contract Drawings.

B. Provide tight buffered cables that are not gel filled and are suitable for indoor/outdoor applications. These cables shall be flame retardant for indoor applications and water and fungus resistant for outdoor applications.

C. Optical Fiber Characteristics
   1. All fibers in the cable shall be usable fibers and meet required specifications.
   2. Each optical fiber shall consist of a doped silica core surrounded by a concentric silica cladding. The fiber shall be matched clad design.
   3. Multi-mode: Provide multimode, optical glass fiber compatible with LED or laser based transmission systems with the following fiber types:

D. Manufacturers
   1. Corning Cable Systems Corp.
   2. CommScope.
   3. Belden Cable.
   4. Optical Cable Corporation
   5. Or equal.

2.02 STANDARD 62.5/125 µM FIBER

A. The multimode fiber shall meet Electronic Industries Alliance/Telecommunications Industry Association (EIA/TIA)-492AAAA-A-1997, "Detail Specification for 62.5-µm Core Diameter/125-µm Cladding Diameter Class 1a Graded-Index Multimode Optical Fibers".

1. Geometry

Core Diameter (µm)	62.5 ± 3.0
Core Non-Circularity	≤ 5 %
Cladding Diameter (µm)	125.0 ± 2.0
Cladding Non-Circularity	≤ 1.0 %
Core-to-Cladding Concentricity (µm)	≤ 1.5
Coating Diameter (µm)	245 ± 5
Colored Fiber Nominal Diameter (µm)	253 - 259

2. Optical

Cabled Fiber Attenuation (dB/km) 850 nm 1300 nm	 ≤ 3.5 ≤ 1.0
Point Discontinuity (dB) 850 nm 1300 nm	 ≤ 0.2 ≤ 0.2
Cabled Effective Modal Bandwidth[1)] (MHz•km) 850 nm	 ≥ 220
IEEE 802.3 GbE Distance (m) 1000BASE-SX Window (850 nm) 1000BASE-LX Window (1300 nm)	 up to 300 up to 550
OFL Bandwidth (MHz•km) 850 nm 1300 nm	 ≥ 200 ≥ 500
Numerical Aperture	0.275 ± 0.015

[1)]As predicted by RML BW, per TIA/EIA 455-204 and IEC 60793-1-41, for intermediate performance laser based systems (up to 1 Gb/s).

2.03 FIBER OPTIC DISTRIBUTION CABLE

A. Multi-fiber cables utilizing 900 micron tight-buffered fibers surrounded by dielectric strength members and a flame-retardant outer jacket. Cables shall meet the application requirements of the National Electric Code® (NEC®) Article 770 and shall be listed accordingly:

1. Non-Plenum Applications - Applicable Flame Tests: UL 1666. Cables shall be listed Optical Fiber Non-conductive Riser (OFNR) or Optical Fiber Conductive Riser (OFCR)

B. Cable Specifications

1. Fiber Count: as indicated.
2. Maximum Tensile Load Short-Term: 148 pounds-force (lbf) (660 newtons (N))
3. Maximum Tensile Load Long Term: 45 lbf (198 N)

4. Minimum Crush Resistance: 57 lbf/in (100 N/cm)
5. Operating Temperature: -20 to +70 °C (OFNR, OFCR) 0 to +70 °C (OFNP, OFCP)

2.04 FIBER OPTIC INTERCONNECT CABLE

A. Tight-Buffered fiber surrounded by aramid yarn strength members and flame-retardant jacket.

B. Cable Specifications
1. Fiber Count: Single or duplex type as required.
2. National Electric Code OFNR designation.
3. Crush Resistance: 20 lbf/in (35 N/cm)
4. Operating Temperature: -20 to +70 °C

C. Fiber Specification Parameters
1. Required Fiber Grade - Maximum Individual Fiber Attenuation.
2. The fiber manufacturer shall proof-test 100 percent of the optical fiber to a minimum load of 100 kpsi.

2.05 CABLE CONSTRUCTION

A. Riser Cables
1. Riser cables up to 24 fibers: In cables with more than one fiber, the fibers shall be stranded around a dielectric member and surrounded by layered aramid yarns. The aramid yarns shall serve as the tensile strength member of the cable. A ripcord may be applied between the aramid yarns and the outer jacket to facilitate jacket removal. The outer jacket shall be extruded over the aramid yarns for physical and environmental protection.
2. Riser cables with more than 24 fibers: The buffered fibers shall be grouped into six fiber subunits. In each subunit, the individual fibers shall be stranded around a dielectric central member and surrounded by layered aramid yarns. A ripcord shall be incorporated in the subunit design to facilitate access to the individual fibers. The subunit jacket shall be extruded over the aramid yarns for additional physical and environmental protection. The subunits shall be stranded around a dielectric central member. A ripcord shall be inserted beneath the outer jacket to facilitate jacket removal. The outer jacket shall be extruded around the units for physical and environmental protection.

B. The strength member shall be a high modulus aramid yarn. The aramid yarns shall be helically stranded around the buffered fibers. Non-toxic, non-irritant talc shall be applied to the yarn to allow the yarns to be easily separated from the fibers and the jacket.

C. Cable Jacket
   1. The jacket shall be continuous, free from pinholes, splits, blisters, or other imperfections. The jacket shall have a consistent, uniform thickness; jackets extruded under high pressure are not acceptable. The jacket shall be smooth, as is consistent with the best commercial practice. The jacket shall provide the cable with a tough, flexible, protective coating, able to withstand the stresses expected in normal installation and service.
   2. The cable and subunit jacket color shall be orange for cables containing multimode fibers.
   3. For cables with more than two fibers, the cable jacket shall be designed for easy removal without damage to the optical fibers by incorporating a ripcord under each cable jacket. Non-toxic, non-irritant talc shall be applied to the aramid yarns to allow the yarns to be easily separated from the fibers and the jacket.
   4. The nominal thickness of the cable outer jacket shall be sufficient to provide adequate cable protection while meeting the mechanical, flammability, low smoke, and environmental test requirements of this document over the life of the cable.

D. The cable shall be all-dielectric.

2.06 CABLE IDENTIFICATION

A. The individual fibers shall be color coded for identification. The optical fiber color coding shall be in accordance with EIA/TIA-598, "Color Coding of Fiber Optic Cables." The coloring material shall be stable over the temperature range of the cable, shall not be susceptible to migration, and shall not affect the transmission characteristics of the optical fibers. Color coded buffered fibers shall not adhere to one another. When fibers are grouped into individual units, each unit shall be numbered in the unit jacket for identification. The number shall be repeated at regular intervals.

B. The outer cable jacket shall be marked with the manufacturer's name or UL file number, date of manufacture, fiber type, flame rating, UL symbol, and sequential length markings every two feet. The markings shall be in contrasting color to the cable jacket.

2.07 CABLE TESTING REQUIREMENTS

A. Fiber cables shall be tested in accordance with the following industry standard (EIA-455) tests:
   1. FOTP-41, Compressive Loading Resistance Test.
   2. FOTP-104, Fiber Optic Cable Cyclic Flexing Test.
   3. FOTP-25, Repeated Impact Testing.
   4. FOTP-33, Fiber Optic Cable Tensile Loading and Bending Test.
   5. FOTP-85, Fiber Optic Cable Twist Test.
   6. FOTP-181, Lightning Damage Susceptibility Test.
   7. FOTP-3, Procedure to Measure Temperature Cycling Effects on Optical Fibers, Cables, and other Passive Fiber Optic Components.
   8. FOTP-82, Fluid Penetration Test for Fluid-Blocked Fiber Optic Cable.

9. FOTP-37, Low or High Temperature Bend Test for Fiber Optic Cable.
10. FOTP-98, External Freezing Test.
11. FOTP-27, Fiber Diameter Measurements.
12. FOTP-28, Measurement of Dynamic Tensile Strength.
13. FOTP-34, Interconnection Device Insertion Loss Test.
14. FOTP-89, Cable Jacket Elongation and Tensile Strength Test.

B. The Contractor shall submit laboratory test reports on representative samples of similar cable design to demonstrate compliance prior to cable installation.

2.08 FIBER CABLE TERMINATIONS, CONNECTORS, AND CABLE ASSEMBLIES

A. Pigtail Splicing
1. For termination of fiber cables at a termination or connector panel (patch panel), with one end of a piece of cable pre-connected and the other end unterminated for splicing to the cable that needs to be terminated. Splicing and connectors shall meet the requirements listed in this Section.
2. A splice/termination tray shall house the splices and serve to fully protect excess lengths of loose tube fibers from exposure. Splice tray shall be compatible with the selected patch panel and installed for easy access to the spliced cable sections.
3. Pigtail assemblies shall match fiber cable type and model and shall be as manufactured by Corning Cable Systems or equal.

B. Buffer Tube Fan-Out Kits
1. Individual fibers within a loose tube cable with 250 µm coated fibers shall use a fan-out kit to maintain flexibility and ease of handling fibers within a termination cabinet. Fan-out kits shall be installed in the patch panel enclosures to transition the loose tube fibers to ruggedized tight-buffered fiber pigtail cables. Optical fusion splices shall connect the loose tube fibers to the tight-buffered pigtail cables. The optical splice loss shall comply with the specifications for optical splices. Splice protection sleeves shall be employed on all splices to protect the splices.
2. The tight-buffered pigtails shall be factory pre-connected with Straight Tip ™ connectors as specified.

C. Connectors (Cable Assemblies)
1. The fiber optic communications system shall utilize ST style connectors for all fiber optic connections. The connectors shall be compatible with the equipment being provided. The connectors shall be designed for use with 62.5/125 micron cable. Each connector shall cause a maximum signal attenuation of 1.6 dB.

2. Field-Installed Connectors: Type ST compatible, Lucent Connector (LC) design with ceramic or polymer ferrule and strain relief boot. The connector installation shall not require the use of epoxies, adhesives or ovens. The connector shall be installable upon 900 µm buffered fiber in one minute or less and upon 2.9 mm jacketed cable in three minutes or less total time. The connector shall contain a mechanical splice and have a tool kit available to aid in assembly. The installation tools used to terminate the connector shall be able to terminate other small-form-factor and single-fiber UniCam connector designs. The connector shall not require end-face polishing in the field. The connector shall have a factory polished optical fiber stub in the connector ferrule that is bonded in the ferrule micro hole. Ferrule material shall be available in ceramic or polymer. Connector specifications shall be as follows:
   a. Insertion loss (typical): 0.3 dB
   b. Durability (mating cycles): 500 (minimum)
   c. Repeatability: Less than 0.2 dB
   d. Operating Temperature: 0 to plus 60 °C
3. After termination with connectors, the fiber ends shall be visually inspected at a magnification of not less than 100 power for multimode and 200x for single mode to check for cracks or pits in the endface of the fiber.
4. Connectors shall have a maximum allowable connection loss of 0.3 dB per mated pair, as measured per EIA-455-34. No index-matching gel is to be used; dry interfaces only.
5. Each connector shall be of the industry standard ST type compatible; designed for single-mode and multimode tolerances; shall meet or exceed the applicable provisions of EIA-455-5, 455-2A, and 455-34; and shall be capable of 100 repeated ratings with a maximum loss increase of 0.1 dB. Connectors shall incorporate a key-way design and shall have a Zirconia ceramic ferrule. Connector bodies and couplings shall be made of corrosion-resistant and oxidation-resistant materials such as nickel-plated zinc, designed to operate in humid environments without degradation of surface finishes. Connectors shall be capable of operating in a range of -40 to 80 °C.
6. Manufacturers
   a. Corning Cable Systems, Hickory, NC
   b. AMP, Inc., Harrisburg, PA
   c. 3M Telecom Systems Group, Austin, TX or equal.

D. Fiber Optic Patch Cables
   1. Fiber optic patch cable shall be two-fiber zipcord 62.5/125 core/clad micron multimode riser rated cable.
   2. Installation of patch cables shall include all spares and observe the minimum fiber bend radius and strain relief.

2.09 FIBER OPTIC TERMINATION PATCH PANELS

A. General

1. Patch panels shall be suitable for wall mounting, comprised of internal mounting plate, cable holders, slack cable take up/organizer blocks, patch block with connectors, and ground lugs as indicated. Panels shall be NEMA 4X, Type 316 stainless steel construction for outdoors; and NEMA 12, Type 316 stainless steel or fiberglass for indoor use. Patch panels shall be suitable for multimode system operation at 800 and 1300 nanometers. Patch panels shall be suitable for ST or LC connectors. The patch panels shall be sized to handle the number of fibers as required. All fibers shall be terminated in the patch panel.
2. Where shown on the plans or in the related specification Sections, the fiber optic cable shall terminate inside a communications cabinet on a termination patch panel. All fiber sub-cables within the exposed buffer tube shall be terminated with fan-out kits with pre-connected pigtails. The patch panel shall have a fiber capacity equal to the total number of fibers (connected and spare) for all cables to be connected.
3. Unused buffer tubes shall be uncut and looped within the patch panel for continuous routing of the fiber buffer tube within the cable assembly.
4. Patch panels shall be designed for either rack mounting on a standard equipment rack or housed in an enclosure for direct wall mounting. The patch panel shall contain "ST" type bayonet or LC couplings. All unused couplings shall have protective dust covers. All panels shall be furnished with locking doors.
5. Factory-terminated, tight-buffered, aramid-reinforced fiber optic jumper assemblies or interconnect cables, standard 3.0-mm O.D., shall connect the optical cable terminations to the patch panel couplings.
6. The termination patch panel shall be equipped with a suitable means for routing and securing of cables, and shall provide a suitable means of protection for the mounted fiber connectors to prevent damage to fibers and connectors during all regular operation and maintenance functions. All cables shall be provided with strain relief. Bend diameters on cable fibers and jumpers must be greater than four inches at all times to ensure optical and mechanical integrity of the optical fibers.
7. Termination panels shall be equipped with splice trays (where applicable) and holders for pigtail and through fiber splicing.
8. Termination panels shall be provided with all hardware, options, and accessories to provide for a complete installation of the fiber optic system.
9. Panels shall be as manufactured by Corning Cable Systems LANscape or equal.

B. Rack Mount Fiber Distribution Center (FDC) Splice Housing

1. A rack-mountable Fiber Distribution Center splice housing shall be provided for pigtail splicing and through fiber splicing equipment.
2. The splice housing shall be compatible with the FDC for interconnection of the splicing equipment with the fiber cable management, termination, and distribution rack equipment.
3. Splice trays shall be provided for pigtail splicing.

4. The splice housing shall be sized and equipped with sufficient capacity to terminate and feed through all required fiber cable, plus an additional 20 percent.
5. Provide one spare splice tray.
6. Splice housing shall be Corning Cable Systems LANscape CSH series.

C. Rack Mount Fiber Distribution Center (FDC)
1. The Fiber/Network equipment rack shall be supplied with two rack-mountable Fiber Distribution Centers (FDCs) capable of 48 ST fiber termination points each. The connector center shall be 19" rack-mountable and provide for internal fan-out, splicing, and connection of the fiber optic cable to front panel ST connection patch panel.
2. The FDC shall provide backbone and intermediate connects and cable strain relief for a maximum of five fiber cable systems. The front shall be swing open construction with keyed latch mechanism.
3. The FDC shall be compatible for interconnection with the FDC Splice Housing and provide space and support the addition of fiber cable splice trays for future cable connection and termination.
4. The Fiber Connection Center shall be Corning Cable Systems LANscape CCH series.

D. Wall/Panel Mount Fiber Distribution Center (WDC)
1. The field-mounted fiber termination enclosures shall be supplied with a Wall Mount Fiber Distribution Center (WDC) capable of 48 ST fiber termination points. The distribution center shall be panel-mounted and provide for internal fan-out, splicing, and connection of the fiber optic cable to the patch panel assemblies.
2. Splice trays shall be provided for pigtail splicing. The WDC shall be provided with pass-thru splice trays for continuation of the fiber cable system to additional sites.
3. Provide one spare splice tray.
4. The WDC shall provide space and support the addition of future fiber cable splice trays.
5. The Wall Mount Fiber Distribution Center shall be Corning Cable Systems LANscape (WCH) series.

PART 3 EXECUTION

3.01 GENERAL

A. Provide all material, equipment, and labor to test and integrate the fiber optic system as indicated and as specified.

B. Installation shall comply with EIA/TIA Standards 568 and 569.

C. Fiber optic cables shall be continuous from component to component. Intermediate fiber splices shall not be allowed.

3.02 IDENTIFICATION

A. Label each termination point.

B. Label each cable, buffer tube, and fiber with permanent waterproof typewritten tags.

3.03 PHYSICAL CHECKOUT

A. General Procedures
   1. Conduct physical checkout of the fiber optic data highway network.
   2. Physical checkout shall be performed prior to functional testing.

B. Check Procedures
   1. Verify that fiber optic cable reels have been off-loaded from truck carefully and not damaged.
   2. Submit to the Engineer all test data provided by the fiber manufacturer.
   3. Verify that the optical fibers of the cable assembly are the type and quantity as specified and as recommended by the Instrumentation System Supplier.
   4. Verify that cable construction is the type specified.
   5. Verify that fiber optic patch panels have been installed plumb and level at locations indicated.
   6. Verify that optical fiber connections or terminations within patch panels and splice closures are in accordance with cable manufacturer's recommendations.

3.04 FIBER OPTIC CABLE TESTING

A. General: The Contractor shall perform pre-installation and post-installation FOC tests. The Engineer shall be notified a minimum of 10 days in advance so that these tests are witnessed. All test equipment shall be traceable to National Institute of Standards and Technology (NIST) standards.

B. Test equipment: The Contractor shall use the following to perform pre-installation and post-installation FOC tests:
   1. Optical Time Domain Reflectometer (OTDR). The OTDR shall be laser precision, and be able to test single mode or multimode systems with a visual fault locator. The OTDR shall be as manufactured by Corning, Agilent Technologies, Fluke Networks, or equal.

C. Pre-installation Tests
   1. The purpose of these tests is to perform acceptance tests on the cable prior to installation to verify that the cable conforms to the manufacturer's specifications; is free of defects, breaks, and damages by transportation and manufacturing processes; and to provide baseline readings in dB.
   2. Prior to removal of each cable from the delivery reel, all optical fibers within the cables shall be tested by the Contractor using an OTDR. The OTDR tests shall consist of end-to-end length and fiber attenuation (dB/km) measurements to ensure proper performance of the fiber optic cable. The tests shall be performed from both ends of each fiber to ensure complete fiber continuity within the cable structure.

3. Pre-installation, "on-reel" test results shall be compared with the manufacturer's test report delivered with the cable. Gross dissimilarities shall be noted and remedied between the Contractor and manufacturer. In all cases, all fibers shall meet the optical attenuation specifications prior to cable installation.
4. The Contractor shall perform tests on all reels of cable. The Engineer shall be notified a minimum of 15 days prior to any test.
5. The Contractor shall document each test and submit the report to the Engineer for review. Documentation shall consist of both hard copy and 3.5 inch electronic disk complete with all application software.
6. Cable shall not be installed until the Engineer has reviewed the test report.

D. Post-installation tests: After FOC has been installed and connected, the following tests shall be performed:
1. Visually inspect terminal connectors for out-of-round condition and surface defects such as micro-chips and cracks using a 200X (minimum) inspection microscope.
2. A recording OTDR shall be used to test for end-to-end continuity and attenuation of each optical fiber. The OTDR shall have an X-Y plotter to provide a hard copy record of each trace of each fiber. The OTDR shall be equipped with sufficient internal masking to allow the entire cable section to be tested. This may be achieved by using an optical fiber pigtail of 30 feet or more to display the required cable section.
3. The OTDR shall be calibrated for the correct index of refraction to provide proper length measurement for the known length of reference fiber.
4. A transmission test shall be performed with the use of a 1310 and 1550 nm stabilized light sources and 1310 nm/1550 nm power meters for SMF. This test shall be conducted in both directions on each fiber of each cable.
5. Hard and electronic copies of test documentation shall be submitted to the Engineer. The documentation shall include:
   a. The trace plot.
   b. Index.
   c. dB/km loss.
   d. Cable length.
   e. Date and time of test.
   f. Wavelength.
   g. Pulse width.
   h. The test site.
   i. Cable ID.
   j. Fiber number and type.
   k. Operator's initials.
   l. The Contractor shall compare the pre-installation test results to the post-installation results. If a deviation of greater than one dB occurs, the Engineer shall be notified in writing by the Contractor, and the cable shall be removed and replaced at no additional cost to the Owner.
6. Upon completion of the previous tests, all FOC coils shall be secured with ends capped to prevent intrusion of dirt and water.

E. Certification of completion of pre- and post-fiber installation testing including test results shall be provided to the Engineer. Test results shall be submitted on paper in a binder, including results indicated in tables or a spreadsheet. Test results that exceed specification limits shall be noted. The electronic copy shall be included in the binder.

F. Required OTDR Trace Information
   1. All traces shall display the entire length of cable under test, highlighting any localized loss discontinuities (installation-induced losses and/or connector losses). The trace shall display fiber length (in kilofeet), fiber loss (dB), and average fiber attenuation (in dB/km), as measured between two markers placed as near to the opposite ends of the fiber under test as is possible while still allowing an accurate reading. Care shall be taken to ensure that the markers are placed in the linear region of the trace, away from the front-end response and far-end Fresnel reflection spike. Time averaging shall be used to improve the display signal to noise ratio. The pulse width of the OTDR shall be set to a sufficient width to provide adequate injected power to measure the entire length the fiber under test.
   2. If connectors exist in the cable under test, then two traces shall be recorded. One trace shall record the fiber loss (dB) and average attenuation (dB/km) of the entire cable segment under test, including connectors. The second trace shall display a magnified view of the connector regions, revealing the connector losses (dB). All connector losses shall be measured using the five-point splice loss measurement technique.
   3. The OTDR trace shall also include the following information:
      a. The date and time of the test.
      b. The cable ID number.
      c. The cable segment ID number.
      d. The fiber color or sub-cable number.
      e. Launch point connector number.
      f. The optical wavelength used for the test.
      g. The refractive index setting of the OTDR.
      h. The pulse width setting of the OTDR.
      i. The averaging interval of the test.

3.05 WARRANTY

A. Refer to Section 13300.

B. The Contractor shall provide an unconditional warranty on all installed cable for a minimum period of 20 years, commencing at the time of final acceptance by the Owner.

C. This Section describes the material and installation requirement for the fiber optic cabling system and associated equipment.

END OF SECTION

SECTION 13441

SCADA SOFTWARE ENGINEERING SECURITY AND QUALITY REQUIREMENTS

PART 1 GENERAL

1.01 PURPOSE

A. This document identifies requirements for COH (City of Houston) water facility SCADA software and programming. These requirements are intended to address three related areas: 1) SCADA Homeland Security Requirements, 2) Texas Engineering Practice Act, 3) COH SCADA system quality requirements:

1. According to the National Strategy for Homeland Security water facilities are part of the nation's critical infrastructure and the government agencies that are responsible shall take specific steps to improve SCADA security.
   a. Government agencies are required to "Establish policies to minimize the likelihood that organizational personnel will inadvertently disclose sensitive information regarding SCADA system design, operations, or security controls" and "Release data related to the SCADA network only on a strict, need-to-know basis, and only to persons/entities explicitly authorized to receive such information".
   b. In compliance with these Homeland Security requirements all SCADA related information is restricted to authorized personnel.
2. In compliance with Texas Engineering Practice Act (Article 3271a) and the recognition that SCADA software is an integral part of the electrical control of the water facilities and is therefore within the jurisdiction of the act:
   a. All SCADA software related work shall be performed by a licensed engineering firm meeting the qualifications as specified in these requirements and referred to within as the Software Engineer (SE). The software produced for the project shall be stamped by SE in accordance with (Article 3271a §137.33 Sealing Procedures for engineering software).
3. Additionally, these requirements are to refine and perpetuate software engineering and software quality standards that will benefit the Water Operation Branch in the areas of facility operations, maintenance, and facility construction projects:
   a. The requirements are intended to benefit facility operations through encouraging SCADA standards of consistency in facility functionality and operation, improved process visibility, improved efficiency and control, lower operating costs and reduced potential permit violations. The SCADA standardization also addresses improved technical support and ease of maintenance.
   b. These requirements specify SCADA related issues in construction, deliverables and qualifications that will help ensure the availability and quality of SCADA system integration.

c. SCADA related software integration activities have been identified as a key point of quality control for construction projects. The SE shall subcontract directly to the general contractor and shall perform an independent assessment of the SCADA related work of the other subcontractors and equipment suppliers to ensure complete system and software integration within the facility per the construction specification and SCADA design guidelines.

PART 2 PRODUCTS

2.01 SCOPE

A. The requirements defined in this document apply to COH water facility SCADA software including system control, monitoring and integration. The scope includes new and existing facility construction projects where new SCADA software is required or where the existing SCADA software is modified.
   1. SCADA software activities shall be performed only by the pre-approved SE and include: PLC programming, HMI configuration and graphics development, historical logging software application and report generation, network configuration and programming.
   2. Manufactured packaged subsystems with pre-engineered software may be specifically excluded if specified in that subsystem equipment specification, that the system shall be shipped with the software as a fully functional unit. The system PLC and HMI hardware and software application shall meet the requirements for SCADA integration and software documentation. The packaged system provider shall deliver all software to SE as soon as possible for the purpose of review and integration.
   3. These requirements apply to all SCADA security related activities including configuration of servers, workstations and network equipment.

PART 3 EXECUTION

3.01 SOFTWARE ENGINEERING REQUIREMENTS

A. The SE shall perform the software engineering functions as required within the scope section meeting the requirements within.
   1. The SE shall use the COH standards for SCADA software engineering and Homeland Security in all work performed.
      a. The SE shall identify and communicate omissions and required modifications to these standards.
      b. Details on these standards are restricted to authorized personnel only according to the Homeland Security requirements and are not included in these requirements. The pre-approved SE is authorized for access to these standards.

B. The SE shall provide the SCADA related submittals as defined in the submittals section.
   1. The SE shall perform the work required to complete the required SCADA software submittals.
   2. The SE shall review and report on the SCADA related submittals of the project subcontractors and equipment providers.

C. The SE shall assist the project team including; the engineer, the water operations and equipment suppliers with the SCADA integration issues.
   1. The SE shall attend project meetings as required by the project team.
   2. The SE shall assist the project team with functional test of the system.
      a. This may include providing project related process data from the SCADA system.

PART 4 MODIFICATIONS

4.01 SUBMITTALS

A. Within 30 days of the notice to proceed the SE shall submit a letter of SE qualifications specifically addressing each item of qualification as defined in these requirements.
   1. Include the SE professional engineering firm licensed number and date of issuance.
   2. Include a statement addressing the awareness of the Homeland Security concerns and intention to restrict the dissemination of security sensitive SCADA network information to those who are authorized by the COH and require the information in the support of this project.

B. Within 90 days of the notice to proceed the SE will submit the Software Engineering Manual (Preliminary Report).
   1. Include the software conventions for the use in the HMI development.
   2. Include diagrams and schedules for all network devices associated with the process control and monitoring for the facility/facilities.
   3. Include the interfaces for the City SCADA network.
   4. Identify every network component (new and existing).
   5. The Software Engineering Manual will be updated for the final O&M.

C. The SE will submit letters of software and network integration compatibility to be included in all the control related submittals.
   1. Included but not limited to: PLCs, network devices, computers, HMI devices.
   2. Include deviations from City standards and the construction specifications for electrical control drawings and tag naming conventions.
   3. Include deviations from the submitted Software Engineering Preliminary Report.
   4. Include the manufacturer supplied package systems with control panels.
   5. The SE shall distribute monthly a Software Engineering Integration Schedule highlighting software and system integration progress and issues.

D. Factory demonstration test confirmation report
   1. After the required factory demonstration test the SE shall submit a report confirming the related software and network compatibility.

E. Field Acceptance Functional Test
   1. Shall be completed prior to performance and reliability testing.
   2. Field Acceptance Functional Test Submittals shall include:
      a. Field Acceptance Functional Test Plan Submittal.
      b. Description of plan for testing field devices.
      c. Description of plan for function test and system integration of each subsystem.
      d. Field Acceptance Functional Test Schedule shall be submitted after the acceptance of the test plan submittal.
      e. Field Acceptance Functional Test plan completion report shall be submitted.

F. Updated Software Engineering Manual (Final Version)
   1. Update and submit a singled CD with all related SCADA software.
   2. Control and network components.
   3. Inventory of software components.
   4. Network device configuration documentation.
   5. Software Engineering documentation.
   6. PLC and HMI software shall be documented using the product development tool.
   7. Software shall be stamped as required in Texas Engineering Practice Act (Article 3271a §137.33 Sealing Procedures) with the date, the engineers name, the PE designation with license number.
   8. The SE will collect and submit all software and network device configuration programs and data developed for the project.

PART 5 SOFTWARE ENEGINEER (SE) QUALIFICATIONS

A. The Drinking Water Operations SCADA Group has set forth these qualifications for performing all SCADA related software activities for water facilities as defined in these requirements.

B. SE qualifications:
   1. The SE shall be a Texas Registered Professional Engineering firm with a minimum of five (5) years of licensed history with the software engineering of the control systems for advanced Water treatment processes.
   2. The SE shall be experienced with the software application development packages which are used as standards for Water Operations including a minimum five (5) years of software engineering experience with Wonderware Archestra and G.E. IFIX HMI application development packages and Siemens PLCs.

3. The SE shall demonstrate a minimum of five (5) years of continuous Cisco Advanced Security expertise. This ensures the SE has the required expertise to configure, secure and maintain the SCADA system network for applicable projects (excluding stand-alone control system at the lift stations and small plants where only a single PLC is installed).
4. The SE shall have errors and omissions insurance with coverage in the amount of $1,000,000.00 (aggregate).
5. The SE shall have an existing office, within the City of Houston, and shall maintain that office for the duration of the warranty and extended software service requirement.
6. To ensure effectiveness and objectivity in the review and reporting of SCADA related integration issues, the SE shall be an independent entity and provide only software engineering services for the construction projects. Additional scope of automation and electrical services may be provided as required by the owner. The services may include, but not limited to network diagram development, efficiency and optimization program and application implementation, data dictionary design guideline development.

END OF SECTION

SECTION 15061

PIPE SUPPORTS

PART 1 GENERAL

1.01 SUMMARY

A. Section includes: Supports for pipe, fittings, valves, and appurtenances.

B. Related sections:
1. The Contract Documents are complementary; what is called for by one is as binding as if called for by all.
2. It is the Contractor's responsibility for scheduling and coordinating the Work of subcontractors, suppliers, and other individuals or entities performing or furnishing any of Contractor's Work.
3. The following Sections are related to the Work described in this Section. This list of Related Sections is provided for convenience only and is not intended to excuse or otherwise diminish the duty of the Contractor to see that the completed Work complies accurately with the Contract Documents.
   a. Section 05120 – Structural Steel.
   b. Section 09901 – Protective Coatings.

1.02 REFERENCES

A. ASTM International (ASTM):
1. A 123 – Standard Specification for Zinc (Hot-Dip Galvanized) Coatings on Iron and Steel Products.
2. A 380 – Standard Practice for Cleaning, Descaling, and Passivation of Stainless Steel Parts, Equipment, and Systems.
3. A 967 – Standard Specification for Chemical Passivation Treatments for Stainless Steel Parts.

B. Manufacturer's Standardization Society (MSS):
1. SP-58 – Pipe Hangers and Supports – Materials, Design, and Manufacture.

1.03 SUBMITTALS

A. Shop drawings: Include schedule, indicating where supports will be installed, and drawings of pipe support system components.

B. Provide Manufacturer's Certificate of Source Testing.

C. Provide Manufacturer's Certificate of Installation and Functionality Compliance.

PART 2 PRODUCTS

2.01 MATERIALS

A. General:
   1. Hot dip galvanized:
      a. Fabricate as specified in Section 05120.
      b. Hot dip after fabrication of support in accordance with ASTM A 123.
      c. Repair galvanized surface as specified in Section 05120.
   2. Stainless steel.
      a. Fabricate as specified in Section 05120.
      b. Finish requirements: Remove free iron, heat tint oxides, weld scale, and other impurities, and obtain a passive finished surface.
      c. At the shop, perform pickling and passivation on all surfaces inside and out in accordance with ASTM A 380 or A 967. Passivation treatments using citric acid are not allowed.
      d. Field welding is prohibited unless specifically allowed by the Owner. All field welds shall be passivated.

B. Outdoor areas: Areas exposed to the natural outdoor environment: Type 304 Stainless Steel.

C. Indoor areas: Areas exposed to an indoor environment including galleries and tunnels: Type 304 Stainless Steel.

D. Submerged, 3 feet or less above water level in a structure, or inside a water bearing structure: Type 316 Stainless Steel.

E. Stainless steel piping system: Type 304 Stainless Steel.

F. Chemical containment areas and chemical piping: Type 316 Stainless Steel.

G. Fasteners: As specified in Section 05120.

2.02 PIPE SUPPORTS

A. Hanger rods: Sized to match suspended pipe hanger, or as indicated on the Drawings:
   1. Manufacturers: One of following or equal:
      a. For stainless steel piping:
         1) Bergen-Power, Figure 133.
         2) Nibco-Tolco, Figure 103.
      b. For all other piping, unless indicated on the Drawings:
         1) Anvil International, Figure 140.
         2) Bergen-Power, Figure 133.
         3) Cooper B-Line Systems, Inc., Figure B3205.

B. Hanger rods, continuously threaded: Sized to match suspended pipe hanger, or as indicated on the Drawings:
   1. Manufacturers: One of the following or equal:

a. For stainless steel piping:
   1) Bergen-Power, Figure 94.
   2) FM Stainless Fasteners.
b. For steel and ductile iron piping:
   1) Anvil International, Figure 146.
   2) Bergen-Power, Figure 94.

C. Eye bolts:
1. For stainless steel piping: Type 316 stainless steel, welded and rated equal to full load capacity of rod.
2. For all other piping, unless indicated on the Drawings: Welded and rated equal to full load capacity of rod.

D. Welded eyebolt rod:
1. Manufacturers: One of the following or equal:
   a. For stainless steel piping:
      1) Nibco-Tolco, Figure 101.
      2) FM Stainless Fasteners.
   b. For all other piping, unless indicated on the Drawings:
      1) Anvil International, Figure 278.
      2) Bergen-Power, Figure 93.
      3) Cooper B-Line Systems, Inc., Figure B3210.

E. Adjustable ring hangers: MSS SP-58, Type 7 or Type 9 (system dependent):
1. Manufacturers: One of the following or equal:
   a. For stainless steel piping:
      1) Nibco-Tolco, Figure 1C.I.
      2) Bergen-Power, Figure 100SS.
   b. For all other piping, unless indicated on the Drawings:
      1) Anvil International, Figure 97.
      2) Cooper B-Line Systems, Inc., Figure B3172.

F. Adjustable clevis hangers: MSS SP-58, Type 1:
1. Manufacturers: One of the following or equal:
   a. For stainless steel piping:
      1) Cooper B-Line Systems, Inc, Figure B3100 or B3102.
      2) FM Stainless Fasteners, Figure 60.
   b. For all other piping, unless indicated on the Drawings:
      1) Anvil International, Figure 260 or Figure 590.
      2) Bergen-Power, Figure100.
      3) Cooper B-Line Systems, Inc., Figure B3100 or B3102.

G. Adjustable clevis hangers for insulated pipe: Oversize:
1. Manufacturers: One of the following or equal:
   a. For stainless steel piping:
      1) Nibco-Tolco, Figure 1A.
   b. For all other piping, unless indicated on the Drawings:
      1) Anvil International, Figure 300.
      2) Bergen-Power, Figure 100EL.
      3) Cooper B-Line Systems, Inc. Figure B3108.

H. Single rod hangers for steam pipe: MSS SP-58, Type 43; malleable iron or steel yoke and roller hangers; swivel to allow rotation of yoke on rod:
   1. Manufacturers: One of the following or equal:
      a. For stainless steel piping:
         1) Nibco-Tolco, Figure 324.
         2) Cooper B-Line Systems, Inc., Figure B3110.
         3) FM Fasteners, Figure 81.
      b. For all other piping, unless indicated on the Drawings:
         1) Anvil International, Figure 181.
         2) Cooper B-Line Systems, Inc., Figure B3110.

I. Double rod hangers for steam pipe: MSS SP-58, Type 41:
   1. Manufacturers: One of the following or equal:
      a. For stainless steel piping:
         1) FM Stainless Fasteners, Figure 71.
      b. For all other piping, unless indicated on the Drawings:
         1) Anvil International, Figure 171.
         2) Cooper B-Line Systems, Inc., Figure B3114.

J. Brackets: MSS SP-58, Type 32 with back plate; rated for 1,500 pounds:
   1. Manufacturers: One of the following or equal:
      a. For stainless steel piping:
         1) Nibco-Tolco, Figure 30M.
         2) Cooper B-Line Systems, Inc., Figure B3066.
         3) FM Stainless Fasteners, Figure 98.
      b. For all other piping, unless indicated on the Drawings:
         1) Anvil International, Figure 195.
         2) Cooper B-Line Systems, Inc., Figure B3066.

K. Brackets, heavy duty: MSS SP-58, Type 33 with back plate; rated for 3,000 pounds:
   1. Manufacturers: One of following or equal:
      a. Anvil International, Figure 199.
      b. Cooper B-Line Systems, Inc., Figure B3067.

L. Standard U-bolt: MSS SP-58, Type 24:
   1. Manufacturers: One of the following or equal:
      a. For stainless steel piping:
         1) Nibco-Tolco, Figure 110.
         2) Cooper B-Line Systems, Inc., Figure B3188.
         3) FM Stainless Fasteners, Figure 37.
      b. For all other piping, unless indicated on the Drawings:
         1) Anvil International, Figure 137.
         2) Bergen-Power, Figure 283.
         3) Cooper B-Line Systems, Inc., Figure B3188.

M. Riser clamps: MSS SP-58, Type 8:
   1. Manufacturers: One of the following or equal:
      a. For stainless steel piping:
         1) Cooper B-Line Systems, Inc., Figure B3373.
         2) FM Stainless Fasteners, Figure 61.

b. For all other piping, unless indicated on the Drawings:
   1) Anvil International, Figure 261.
   2) Bergen-Power, Figure 126.
   3) Cooper B-Line Systems, Inc., Figure B3373.

N. Pipe clamps: MSS SP-58, Type 4:
   1. Manufacturers: One of the following or equal:
      a. For stainless steel piping:
         1) Nibco-Tolco, Figure 4.
         2) Cooper B-Line Systems, Inc., Figure 3140.
      b. For all other piping, unless indicated on the Drawings:
         1) Anvil International, Figure 212.
         2) Bergen-Power, Figure 175.
         3) Cooper B-Line Systems, Inc., Figure B3140.

O. Adjustable offset pipe clamp:
   1. Manufacturers: One of the following or equal:
      a. For stainless steel piping:
         1) Nibco-Tolco, Figure 4.
         2) Cooper B-Line Systems, Inc., Figure B3149.
         3) FM Stainless Fasteners, Figure 63.
      b. For all other piping, unless indicated on the Drawings:
         1) Anvil International, Figure 100.
         2) Cooper B-Line Systems, Inc., Figure B3149.

P. Offset pipe clamp:
   1. Manufacturers: One of the following or equal:
      a. For stainless steel piping:
         1) Nibco-Tolco, Figure 8.
         2) Cooper B-Line Systems, Inc., Figure 3148.
      b. For all other piping, unless indicated on the Drawings:
         1) Anvil International, Figure 103.
         2) Cooper B-Line Systems, Inc., Figure B3148.

Q. Floor stand or stanchion saddles: MSS SP-58, Type 37. Provided with U-bolt hold down yokes:
   1. Manufacturers: One of the following or equal:
      a. For stainless steel piping:
         1) Nibco-Tolco, Figure 318.
         2) FM Stainless Fasteners, Figure 59.
      b. For all other piping, unless indicated on the Drawings:
         1) Anvil International, Figure 259.
         2) Bergen-Power, Figure 125.
         3) Cooper B-Line Systems, Inc., Figure B3090.
      c. Threaded pipe stand support stanchion. Match pipe support material.
         1) Anvil International, Figure 63T.
         2) Bergen-Power, Figure 138.
         3) Cooper B-Line Systems Inc., Figure B3088ST.

R. Spring hangers:
   1. Manufacturers: One of the following or equal:
      a. For stainless steel piping:
         1) Bergen-Power, Figure 920.
      b. For all other piping, unless indicated on the Drawings:
         1) Anvil International, Figure B-268, Type G.
         2) Bergen-Power, Figure 920.

S. One hole pipe clamps:
   1. Manufacturers: One of the following or equal:
      a. For stainless steel piping:
         1) Not used.
      b. For all other piping:
         1) Anvil International, Figure 126.
         2) Carpenter & Paterson, Figure 237S.

T. Welded beam attachment: MSS SP-58, Type 22:
   1. Manufacturers: One of the following or equal:
      a. For stainless steel piping:
         1) Nibco-Tolco, Figure 304.
         2) Cooper B-Line Systems, Inc., Figure 3083.
      b. For all other piping, unless indicated on the Drawings:
         1) Anvil International, Figure 66.
         2) Bergen-Power, Figure 113A or 113B.
         3) Cooper B-Line Systems, Inc., Figure B3083.

U. Heavy pipe clamp: MSS SP-58, Type 4:
   1. Manufacturers: One of the following or equal:
      a. For stainless steel piping:
         1) Nibco-Tolco, Figure 4H.
      b. For all other piping, unless called out otherwise on the Drawings:
         1) Anvil International, Figure 216.
         2) Bergen-Power, Figure 298.

V. PTFE pipe slide assembly: MSS SP-58, Type 35 with lateral and vertical restraint:
   1. Manufacturers: One of the following or equal:
      a. For stainless steel piping:
         1) Nibco-Tolco, Figure 426.
      b. For all other piping, unless indicated on the Drawings:
         1) Anvil International, Figure 257, Type 3.
         2) Cooper B-Line Systems, Inc., Figure B3893.

W. Anchor bolts, concrete anchors, concrete inserts, powder-actuated fasteners, and sleeve anchors: As specified in Section 05120.

PART 3 EXECUTION

3.01 INSTALLATION

A. Support, suspend, or anchor exposed pipe, fittings, valves, and appurtenances to prevent sagging, overstressing, or movement of piping; and to prevent thrusts or loads on or against connected equipment.

B. Field-verify support location, orientation, and configuration to eliminate interferences prior to fabrication of supports.

C. Carefully determine locations of inserts. Anchor to formwork prior to placing concrete.

D. Use flush shells only where indicated on the Drawings.

E. Do not use anchors relying on deformation of lead alloy.

F. Do not use powder-actuated fasteners for securing metallic conduit or steel pipe larger than 1 inch to concrete, masonry, or wood.

G. Suspend pipe hangers from hanger rods and secure with double nuts.

H. Install continuously threaded hanger rods only where indicated on the Drawings.

I. Use adjustable ring hangers or adjustable clevis hangers, for 4 inch and smaller diameter pipe.

J. Use adjustable clevis hangers for pipe larger than 4 inches in diameter.

K. Secure pipes with double nutted U-bolts or suspend pipes from hanger rods and hangers.
   1. For stainless steel piping, use stainless steel U-bolts.
   2. For all other piping, use galvanized U-bolts.

L. Support spacing:
   1. Support 2-inch and smaller piping on horizontal and vertical runs at maximum 5 feet on center, unless otherwise specified.
   2. Support larger than 2-inch piping on horizontal and vertical runs at maximum 10 feet on center, unless otherwise specified.
   3. Support exposed polyvinyl chloride and other plastic pipes at maximum 5 feet on center, regardless of size.
   4. Support tubing, PVC pipe 1-inch and smaller, copper pipe and tubing, fiber-reinforced plastic pipe or duct, and rubber hose and tubing at intervals close enough to prevent sagging greater than 1/4 inch between supports.
   5. Do not suspend or support valves, pipe, and fittings from another pipe or conduit.

M. Install supports at:
   1. Any change in direction.

2. Both sides of flexible pipe connections.
3. Base of risers.
4. Floor penetrations.
5. Connections to pumps, blowers, and other equipment.
6. Valves and appurtenances.

N. Securely anchor plastic pipe, valves, and headers to prevent movement during operation of valves.

O. Anchor plastic pipe between expansion loops and direction changes to prevent axial movement through anchors.

P. Provide elbows or tees supported from floors with base fittings where indicated on the Drawings.

Q. Support base fittings with metal supports or when indicated on the Drawings for support on concrete piers.

R. Do not use chains, plumbers' straps, wire, or similar devices for permanently suspending, supporting, or restraining pipes.

S. Support plumbing drainage and vents in accordance with latest version of applicable plumbing code.

T. Supports, clamps, brackets, and portions of support system bearing against copper pipe: Copper plated, copper throughout, or isolated with neoprene or polyvinyl chloride tape.

U. Where pipe is insulated, install over-sized supports and hangers.

V. Install insulation shield in accordance with MSS SP-58, Type 40. Shield shall be galvanized steel unless otherwise specified or indicated on the Drawings.

W. Install riser clamps at floor penetrations and where indicated on the Drawings.

X. Coat support system components as specified in Section 09901.

3.02 COMMISSIONING AND PROCESS START-UP REQUIREMENTS

A. Manufacturer services for each type of pipe support:
1. Provide Manufacturer’s Certificate of Source Testing.
2. Provide Manufacturer’s Certificate of Installation and Functionality Compliance.

END OF SECTION

SECTION 15067

THERMOPLASTIC PROCESS PIPE

PART 1 GENERAL

1.01 SUMMARY

A. Section Includes:
1. Contractor shall provide all labor, materials, equipment, and incidentals as shown, specified, and required to furnish and install thermoplastic piping and fittings.

B. Coordination:
1. Review installation procedures under this and other Sections and coordinate installation of items to be installed with or before thermoplastic piping Work.

C. Related Sections:
1. The Contract Documents are complementary; what is called for by one is as binding as if called for by all.
2. It is the Contractor's responsibility for scheduling and coordinating the Work of subcontractors, suppliers, and other individuals or entities performing or furnishing any of Contractor's Work.
3. The following Sections are related to the Work described in this Section. This list of Related Sections is provided for convenience only and is not intended to excuse or otherwise diminish the duty of the Contractor to see that the completed Work complies accurately with the Contract Documents.

1.02 REFERENCES

A. Standards referenced in this Section are:
1. AASHTO, Standard Specifications for Highway Bridges.
2. ASTM D1784, Specification for Rigid Poly (Vinyl Chloride) (PVC) Compounds and Chlorinated Poly (Vinyl Chloride) (CPVC) Compounds.
3. ASTM D1785, Specification for Poly (Vinyl Chloride) (PVC) Plastic Pipe, Schedules 40, 80 and 120.
4. ASTM D2464, Specification for Threaded Poly (Vinyl Chlorinated) (PVC) Plastic Pipe Fittings, Schedule 80.
5. ASTM D2466, Specification for Poly (Vinyl Chloride) (PVC) Plastic Pipe Fittings, Schedule 40.
6. ASTM D2467, Specification for Poly (Vinyl Chloride) (PVC) Plastic Pipe Fittings, Schedule 80.
7. ASTM D2513, Specification for Thermoplastic Gas Pressure Pipe, Tubing, and Fittings.
8. ASTM D2564, Specification for Solvent Cements for Poly (Vinyl Chloride) (PVC) Plastic Piping Systems.
9. ASTM D2665, Specification for Poly (Vinyl Chloride) (PVC) Plastic Drain, Waste, and Vent Pipe and Fittings.

10. ASTM D3034, Specification for Type PSM Poly (Vinyl Chloride) (PVC) Sewer Pipe and Fittings.
11. ASTM D3139, Specification for Joints for Plastic Pressure Pipes Using Flexible Elastomeric Seals.
12. ASTM D3212, Specification for Joints for Drain and Sewer Plastic Pipes Using Flexible Elastomeric Seals.
13. ASTM D3311, Specification for Drain, Waste and Vent (DWV) Plastic Fittings Patterns.
14. ASTM F477, Specification for Elastomeric Seals (Gaskets) for Joining Plastic Pipe.
15. ASTM F656, Specification for Primers for Use in Solvent Cement Joints of Poly (Vinyl Chloride) (PVC) Plastic Pipe and Fittings.
16. ASTM F679, Specification for Poly (Vinyl Chloride) (PVC) Large-Diameter Plastic Gravity Sewer Pipe and Fittings.
17. ASTM F1336, Specification for Poly (Vinyl Chloride) (PVC) Gasketed Sewer Fittings.
18. ASTM F1674, Standard Test Method for Joint Restraint Products for Use with PVC Pipe.
19. NSF 14, Plastic Piping Systems Components and Related Material.
20. ANSI/NSF 61, Drinking Water System Components - Health Effects.
21. Standards of U.S. Food and Drug Administration.

1.03 QUALITY ASSURANCE

A. Qualifications:
   1. Manufacturer: Shall have a minimum of five years experience producing thermoplastic pipe and fittings substantively similar to the materials specified, and shall be able to submit documentation of satisfactory service in at least five completed installations in operation for at least five years each.
   2. Installer:
      a. Engage a single pipe installer who shall be responsible for all thermoplastic pipe Work, and who shall employ only tradesmen with specific skills and experience in the type of Work required.
      b. Installer shall have a minimum of five years experience installing thermoplastic pipe and fittings substantively similar to the materials specified and substantively similar to or larger than the scope of thermoplastic piping Work on the Project, and shall be able to submit documentation of satisfactory experience in at least five completed installations in operation for at least five years each.

B. Component Supply and Compatibility:
   1. Obtain all materials included in this Section, regardless of component Supplier, from a single thermoplastic pipe Supplier. All pipe of each material type shall be furnished by the same manufacturer.
   2. Thermoplastic pipe Supplier shall review and approve to prepare all Shop Drawings and other submittals for all materials furnished under this Section.
   3. Materials shall be suitable for specified service conditions and shall be integrated into overall assembly by thermoplastic pipe Supplier.

1.04 SUBMITTALS

A. Action Submittals: Submit the following:
   1. Product Data:
      a. Submit product data on pipe, fittings, gaskets, hardware, and appurtenances sufficient to demonstrate compliance with the Contract Documents.

B. Informational Submittals: Submit the following:
   1. Certificates:
      a. Submit manufacturer's certificate of compliance standards referenced in this Section.
   2. Source Quality Control Submittals:
      a. When requested by Engineer, submit results of source quality control tests.
   3. Qualifications Statements:
      a. Submit qualifications of manufacturer when requested by Engineer.
      b. Submit qualifications of installer when requested by Engineer.

PART 2 PRODUCTS

2.01 SERVICE CONDITIONS

A. General:
   1. Pipe materials shall be suitable for services intended.
   2. Pipe shall be homogeneous throughout and free of visible cracks, holes, foreign inclusions, and other defects. Unless otherwise shown or indicated, pipe shall be uniform in color, opacity, density, and other physical properties.
   3. Comply with NSF 14.
   4. Buried pipe shall be capable of withstanding external live load, including impact, equal to AASHTO H-20 loading, with cover shown or indicated on the Drawings.
   5. Pipe, fittings, and appurtenances in contact with potable water or water that will be treated to become potable shall be listed in ANSI/NSF 61 as being suitable for contact with potable water, and shall comply with requirements of the authorities having jurisdiction at the Site.

2.02 POLYVINYL CHLORIDE (PVC) PIPING

A. PVC Pipe – General Applications: Unless otherwise shown or indicated, PVC pipe shall comply with the following:
   1. Manufacturers: Provide products of one of the following:
      a. Ipex, Inc.
      b. Spears Manufacturing Company.
      c. Or approved equal.
   2. Material: Unless otherwise specified, comply with the following:
      a. Type and Grade: Type 1, Grade 1.

b. Wall Thickness: Schedule 80 complying with ASTM D1784 and ASTM D1785, and US Product Service PS 21-70 as having same outside diameter dimension as cast-iron pipe.
c. Temperature Rating: Rated for temperature to 140 degrees F.
d. Color: Gray.

3. Fittings: Type, grade, schedule, and color of fitting shall match the associated pipe.
   a. Solvent Weld: Comply with ASTMD2467.
4. Joints:
   a. Solvent Weld: Use primer and solvent cement recommended by PVC pipe manufacturer for the application. Primer shall be in accordance with ASTM F656, and solvent cement shall be in accordance with ASTM D2564.

B. PVC Drain, Waste, and Vent (PVC-DWV) Pipe.
1. Manufacturers: Provide products of one of the following:
   a. Chemtrol, manufactured by Nibco, Inc.
   b. Spears Manufacturing Company.
   c. Or approved equal.
2. Material: In accordance with ASTM D1784. Unless otherwise shown or indicated, PVC-DWV pipe shall be:
   a. Type and Grade: Type 1, Grade 1.
   b. Wall Thickness: Schedule 40.
   c. Color: White.
3. Fittings: Manufactured in accordance with ASTM D2665 and ASTM D3311.
   a. Solvent weld.
4. Joints:
   a. Solvent weld.

2.03 DOUBLE CONTAINMENT POLYVINYL CHLORIDE (PVC) PIPING

A. Double containment PVC pipe:
1. Both the carrier pipe and the containment pipe shall meet all the requirements of paragraph 2.2 for PVC piping.
2. Carrier pipe shall be suspended inside the containment pipe such that the centerline of the containment pipe is the same as the centerline of the carrier pipe. This shall be accomplished by means of slip-on centralizer brackets.
   a. Centralizers shall be furnished by the PVC pipe manufacturer, and shall be the manufacturer’s models specific to the sizes of pipe in which they are to be installed.
   b. Centralizers shall be manufactured of a material that is resistant to the chemical to be conveyed.
   c. Maximum centralizer bracket spacing:
      1) 1/2”x2” piping: 5 feet.
      2) 1”x3” piping: 6 feet.
      3) 2”x4” piping: 7 feet.
      4) 3”x6” piping: 8 feet.
3. Double containment fittings shall be one piece and shall be connected to the containment pipe by solvent weld joints and to the carrier pipe by extender couplings.

B. Double Wall Termination Fittings:
   1. Use at all transitions from double containment piping to single wall PVC piping.
   2. Install termination fittings six inches above grade.
   3. Shall consist of a reducer coupling (for connection to containment pipe) that is pre-fabricated to an internal extender coupling for connection to the carrier piping.

C. Manufacturers:
   1. Ipex, Inc.
   2. Spears Manufacturing Company,
   3. Or approved equal.

2.04 FLEXIBLE TUBING

A. Flexible Tubing: Unless otherwise shown or indicated, flexible tubing shall be as follows:
   1. Manufacturers: Provide products of one of the following:
      a. Parkson Parflex Formula Number V-1.
      b. Saint Gobain.
      c. Or approved equal.
   2. Material: Material shall comply with USDA standard for contact with meat and poultry food products, FDA CFR 21 for food packaging or shall be NSF 61 approved. Unless otherwise shown or indicated, Vinyl tubing shall be:
      a. Instrument and laboratory grade.
      b. Color: Clear.
      c. Temperature Rating: -10 to 150 degrees F.
      d. Pressure Rating: 46 psi at 73 deg F and 23 psi at 120 deg F.
   3. Fittings: Fitting shall be barbed or as recommended by tubing manufacturer.

2.05 SOURCE QUALITY CONTROL

A. Shop Tests:
   1. Pipe manufacturer shall maintain continuous quality control program.
   2. Where applicable and when requested by Engineer, submit results of source quality control tests specified in reference standards.

PART 3 EXECUTION

3.01 INSPECTION

A. Inspect pipe materials for defects in material and workmanship. Verify compatibility of pipe and fittings.

END OF SECTION

SECTION 15076

PIPE IDENTIFICATION

PART 1 GENERAL

1.01 SUMMARY

A. Section includes: Pipe identification including the following:
   1. Pipe identification by color and legend.
   2. Underground warning tape.
   3. Tracer wire.
   4. Witness markers.
   5. Valve identification.

B. Related sections:
   1. The Contract Documents are complementary; what is called for by one is as binding as if called for by all.
   2. It is the Contractor's responsibility for scheduling and coordinating the Work of subcontractors, suppliers, and other individuals or entities performing or furnishing any of Contractor's Work.
   3. The following Sections are related to the Work described in this Section. This list of Related Sections is provided for convenience only and is not intended to excuse or otherwise diminish the duty of the Contractor to see that the completed Work complies accurately with the Contract Documents.
      a. Section 01330 – Submittal Procedures.
      b. Section 09901 – Protective Coatings.

1.02 REFERENCES

A. American Society of Mechanical Engineers (ASME): A13.1 – Scheme for the Identification of Piping Systems.

1.03 SUBMITTALS

A. Submit as specified in Section 01330.

B. Submit following:
   1. Product data.
   2. Samples.
   3. Manufacturer's installation instructions.
   4. Operation and Maintenance Data.
   5. Warranty.

PART 2 PRODUCTS

2.01 ABOVE GROUND AND IN-CHASE PIPE IDENTIFICATION

A. Manufacturers:
   1. One of the following or equal:
      a. Seton, Opti Code Pipe Markers.
      b. Lab Safety Supply.
      c. Marking Services, Inc.

B. Materials:
   1. Pipe markers: Self-adhesive vinyl, suitable for outdoor application from -40 degrees to 180 degrees Fahrenheit; in accordance with ASME A13.1 requirements.
      a. Lettering:

Nominal Pipe Diameter	Lettering Size
Less than 1.5	1/2 inch
1.5 inches to 2 inches	3/4 inch
2.5 inches to 6 inches	1-1/4 inches
8 inches to 10 inches	2-1/2 inches
Over 10 inches	3-1/2 inches

      b. Marker colors:

Service	Lettering	Background
Flammables, chemicals, toxics	Black	Yellow
Water, nontoxic solutions or low hazard liquids	White	Green
Nonflammable or nontoxic gases	White	Blue
Fire quenching fluids (foam, fire water, CO_2 Halon)	White	Red

   2. Coating: As specified in Section 09901.
   3. Pipe identification tags: Aluminum or stainless steel with stamped-in 1/4 inch high identifying lettering.
   4. Pipe identification tag chains: Aluminum or stainless steel.
   5. Snap-on markers: Markers with 3/4 inch high letters for 3/4 to 4 inch pipe or covering, or 5 inch high letters for 5 inch or larger pipe or cover, as manufactured by one of following:
      a. Brady Bradysnap-On B-915.
      b. Seton Setmark.

2.02 BURIED PIPELINE IDENTIFICATION

A. Underground warning tape:
   1. Manufacturer: One of the following or equal:
      a. Seton Name Plate Company, Branford, CT.
      b. T. Christy Enterprises, Inc.
   2. Material:
      a. Polyethylene tape for prolonged underground use.
      b. Minimum tape thickness: 4 mils.
      c. Overall tape width: 6 inches.
      d. Message: “CAUTION” with the name of the service followed by “LINE BURIED BELOW.” in black lettering on colored background, in accordance with approved APWA colors.
         1) Water: Blue.
         2) Sewer: Green.
         3) Telephone: Orange.
         4) Gas and other services: Yellow.

B. Tracer wire:
   1. Manufacturers: One of the following or equal:
      a. Kris-Tech Wire.
      b. Corrpro.
   2. Materials: One of the following or equal:
      a. Solid copper conductor with 30 mil HMWPE.
      b. 10 gauge or thicker wire.
      c. Match insulation color to the color of the pipe being installed.

C. Witness markers:
   1. Manufacturers: One of the following or equal:
      a. Carsonite Composites, Utility Marker.
      b. Hampton Technical Associates, Inc.
   2. Materials:
      a. Glass fiber and resin reinforced thermosetting composite material.
      b. UV resistant.
   3. Constructed as a single piece.
   4. Pointed at the bottom end.
   5. Information to be included on the marker:
      a. “Caution” (type of service) “Pipeline”.
      b. Phone number for Underground Service Alert.
      c. Phone number for Owner in case of emergency.
      d. Station number.
      e. Offset: Only provide offset if marker is not directly over the pipe.
      f. Name of appurtenance or fitting (e.g. 45, BO, ARV etc.)

2.03 VALVE IDENTIFICATION

A. The Contractor shall furnish and install tags for all valves and gates required for the Work.
   1. Tags shall be 2-in diameter round, stainless steel for buried applications.

2. Tags shall be furnished with a non-corrosive metal wire suitable for attaching the tag to the operator base.
3. Tags shall be stamped in 1/4-inch high letter.
4. Tags shall not be attached in such a way as to inhibit the operation of the valve or gate.
5. Buried valve tags shall be secured to concrete with the specified valve or gate number.
6. Submit two samples of the type of tag proposed and the manufacturer's standard color chart and letter styles for review.
7. Manufacturer: Seton Name Plate Company, Branford, CT or equal.

PART 3 EXECUTION

3.01 EXAMINATION

A. Verify satisfactory conditions of substrate for applying identification.

B. Verify that conditions are satisfactory for installation and application of products.

3.02 PREPARATION

A. Prepare and coat surfaces as specified in Section 09901.

B. Prepare surface in accordance with product manufacturer's instructions.

3.03 ABOVE GROUND AND IN-CHASE PIPING IDENTIFICATION

A. Identify exposed piping, valves, and accessories in accessible chases with lettering or tags designating service of each piping system with flow directional arrows and color code.

B. Color code: Paint all piping in accordance with established Owner standards.

C. Lettering and flow direction arrows:
1. Stencil lettering on painted bands or use snap-on markers on pipe to identify pipe. When stenciling, stencil 3/4 inch high letters on 3/4 through 4-inch pipe or coverings, or 5-inch high letters on 5-inch and larger pipe or coverings.
2. Provide lettering and flow direction arrows near equipment served, adjacent to valves, both sides of walls and floors where pipe passes through, at each branch or tee, and at intervals of not more than 50 feet in straight runs of pipe.

D. Space 6-inch wide bands along stainless steel pipe at 10-foot intervals and other pipe types at 5-foot intervals.

E. Apply and/or install all labels and tags at clearly visible locations.

F. Metal tags:
1. Where outside diameter of pipe or pipe covering is 5/8 inch or smaller, provide metal pipe identification tags instead of lettering.

2. Fasten pipe identification tags to pipe with chain.
3. Where tags are used, color code pipe as scheduled.

3.04 BURIED PIPING IDENTIFICATION

A. Underground warning tape: Place continuous run of warning tape in pipe trench, 12 inches above the pipe.

B. Tracer wire:
1. Install on all non-metallic pipe.
2. Install an electrically continuous run of tracer wire along the entire length of the pipe with wire terminations in valve boxes, vaults, or structures.
3. Install tracer wire on top of the pipe and secure to pipe with tape a minimum of every 10 feet.
4. Where approved, splice sections of wire together using approved direct bury wire nuts. Twisting the wires together is not acceptable.

C. Witness markers:
1. Install over pipe in unpaved open-space areas at intervals of not greater than 200 feet.
2. Place markers at appurtenances located in unpaved areas.
3. Embed markers at least 18 inches into the soil.

3.05 APPLICATION

A. Identify piping with legend markers, directional arrow markers, and number markers; use self-adhesive arrow roll tape to secure ends of piping markers and indicate flow direction.

B. Provide legend markers, directional arrow markers, and number markers where piping passes through walls or floors, at piping intersections and at maximum 15 foot spacing on piping runs.

C. Provide piping marker letters and colors as scheduled.

D. Place markers on piping so they are clearly visible from operator's position near piping. Locate markers along horizontal centerline of pipe, unless better visibility is achieved elsewhere.

3.06 PIPING COLOR CODE AND MARKER SCHEDULE

Service Fluid	Pipe Color	Marker Legend
Chemical Drain	Charcoal	CHEMICAL DRAIN
Cooling Water	Blue	COOLING WATER
Domestic Cold Water	Light Blue	DOMESTIC COLD WATER
Domestic Hot Water	Light Blue	DOMESTIC HOT WATER
Deionized Water	Blue	DEIONIZED WATER

Service Fluid	Pipe Color	Marker Legend
Drain	Charcoal	DRAIN
Exhaust Gas	Yellow	EXHAUST GAS
Engine Jacket Water	Dark Blue	ENGINE JACKET WATER
Fuel Oil	Orange	FUEL OIL
Grit	Black	GRIT
Instrumental Air	Purple	INSTRUMENTATION AIR
Engine Lube Oil	Red	ENGINE LUBE OIL
Pumped Drain	Charcoal	PUMPED DRAIN
Process Water	Dark Blue	PROCESS WATER
Raw Wastewater	Buff	NONE USED
Return Water	Silver/Grey	RETURN WATER
Sample	Green	FLUID BEING SAMPLED
Sanitary Drain	Charcoal	SANITARY DRAIN
Service Air	Green	SERVICE AIR
Sodium Hypochlorite	Yellow	CHLORIDE SOLUTION
Sodium Bisulfite	Yellow	SODIUM BISULFITE SOLUTION
Tank Drain	Charcoal	TANK DRAIN
Vent Pipe	Yellow	VENT PIPE
Washdown Water (W3)	Medium Blue	WASHDOWN WATER

Letters	Color of Pipe	Color of Bands	Color of Letters
Finished or Potable (cold)	Light blue	None	Black
Potable (hot)	Light blue	Red	Black
Nonpotable or Raw	Light blue	Dark Gray	Black
Distilled or Demineralized	Light Blue	Black	Black
Service Water (lines downstream from backflow prevention unit)	Dark Blue	White	Red
Sample	Dark Blue	Black	White
Fire Protection	Red	None	Black
Hydrants	Aluminum	None	Black

Letters	Color of Pipe	Color of Bands	Color of Letters
Filter-to-Waste	Light Brown	None	Black
Wash Water Drain	Light Gray	None	Black
Sewage	Light Gray	None	Black
Solids	Dark Brown	None	White
Scum	Dark Brown	None	White
Drain	Dark Gray	None	White
Sump Pump Pipe Line	Dark Gray	Red	White
Chlorine (gas, liquid, or vent)	Yellow	None	Black
Chlorine (solution)	Yellow	Red	Black
Ferric Chloride	Orange	Yellow	Black
Alum	Orange	Yellow	Black
Ammonia	Yellow	Dark Brown	Black
Auxiliary Chemical	Yellow	Dark Blue	Black
Sulfuric Acid	Yellow	Orange	Black
Sodium Hydroxide	Yellow	Dark Green	Black
Algaecide (Potassium Permanganate, Copper Sulfate)	Orange	White	Black
Polymer	Orange	Dark Green	Black
Polyphosphate	Orange	Dark Gray	Black
Carbon	Black	None	White
Ozone	None	Red	White
Stainless Steel Pipe	White	Red	White
Ozone Off Gas			
Stainless Steel Pipe	None	Orange	White
Other Pipe	White	Orange	White
Compressed Air	Light Green	None	Black
Instrument Air	Light Green	Dark Green	Black
Backwash Air (Low Pressure)			
Stainless Steel Pipe	None	None	Black
Other Pipe	Light Green	None	Black
Process Air (Ozone-Low Pressure)			

Letters	**Color of Pipe**	**Color of Bands**	**Color of Letters**
Stainless Steel Pipe	None	None	Black
Other Pipe	Light Green	None	Black
Laboratory Vacuum	Dark Green	Light Green	Red
Natural Gas	Red	Yellow	White
Refrigerant	Yellow	White	Black
Heating Water (supply)	Light Gray	White	Black
Heating Water (return)	Light Gray	Black	Black
Condenser Water (supply)	Light Gray	Dark Brown	Black
Condenser Water (return)	Light Gray	Red	Black
Chilled Water (supply)	Light Brown	Dark Gray	White
Chilled Water (return)	Light Brown	Red	White

END OF SECTION

SECTION 15082

INSULATION OF PROCESS PIPING AND EQUIPMENT

PART 1 GENERAL

1.01 SUMMARY

A. Section Includes:
   1. Contractor shall provide all labor, material, equipment and incidentals as shown, specified and required to furnish and install insulation for exposed exterior piping systems 3-inch diameter and smaller.

B. Coordination:
   1. Review installation procedures under this and other Sections and coordinate the installation of items that must be installed with, or before, the insulation of process piping and equipment Work.

C. Related Sections:
   1. The Contract Documents are complementary; what is called for by one is as binding as if called for by all.
   2. It is the Contractor's responsibility for scheduling and coordinating the Work of subcontractors, suppliers, and other individuals or entities performing or furnishing any of Contractor's Work.
   3. The following Sections are related to the Work described in this Section. This list of Related Sections is provided for convenience only and is not intended to excuse or otherwise diminish the duty of the Contractor to see that the completed Work complies accurately with the Contract Documents.

1.02 REFERENCES

A. Standards referenced in this Section are listed below:
   1. American Society for Testing and Materials, (ASTM).
      a. ASTM C 449/C 449M, Mineral Fiber Hydraulic-Setting Thermal Insulating and Finishing Cement.
      b. ASTM C 547, Specification for Mineral Fiber Pipe Insulation.
      c. ASTM E 84, Test Method for Surface Burning Characteristics of Building Materials.
   2. Federal Specifications, (FS).
      a. FS HH-1-558B, Insulation Blocks, Boards, Blankets, Felts, Sleeving, Pipe Fitting Covering.
      b. FS SS-C-160, Cement, Insulation, Thermal.
   3. National Fire Protection Association, (NFPA).
      a. NFPA 90A, Standard for the Installation of Air Conditioning and Ventilating Systems.

1.03 QUALITY ASSURANCE

A. Manufacturer's Qualifications:
   1. Manufacturer shall have a minimum of five years experience of producing substantially similar equipment and shall be able to show evidence of at least five installations in satisfactory operation for at least five years.

B. Component Supply and Compatibility:
   1. Obtain all equipment included in this Section, regardless of the component manufacturer, from a single insulation of process piping and equipment manufacturer.
   2. The insulation of process piping and equipment manufacturer shall review and approve or prepare all Shop Drawings and other submittals for all components furnished under this Section.
   3. All components shall be specifically constructed for the specified service conditions and shall be integrated into the overall assembly by the insulation of process piping and equipment manufacturer.

C. Regulatory Requirements: Comply with applicable provisions and recommendations of the following, except as otherwise shown or specified.
   1. National Fire Protection Association, (NFPA).
   2. Underwriters' Laboratories, Inc., (UL). Fire hazard ratings to be verified by Underwriters' Laboratories, Inc. label or listing or a certified test report from an approved independent testing laboratory.
   3. Local and State Building Codes and Ordinances:
      a. Uniform Building Code
      b. Uniform Mechanical Code.
      c. Model Energy Code.
   4. Permits: Contractor shall obtain and pay for all required permits, fees, inspections and approvals by authorities having jurisdiction.

1.04 SUBMITTALS

A. Action Submittals: Submit the following:
   1. Product Data:
      a. Manufacturers' catalog literature, specifications, and illustrations with the following information:
         1) Thermal properties.
         2) Physical properties.
      b. Fire hazard ratings.
      c. Facing information.
      d. Installation instructions.
      e. Jointing recommendations for butt joints and longitudinal seam.
   2. Samples:
      a. Fiberglass insulation.
      b. Weatherproof insulation.

B. Informational Submittals: Submit the following:
   1. Supplier Instructions:
      a. Fabrication instructions for pipe fittings and valve insulation and coatings.

1.05 DELIVERY, STORAGE AND HANDLING

A. Packing, Shipping, Handling and Unloading:
   1. Deliver materials to the Site to ensure uninterrupted progress of the Work. Deliver anchor bolts and anchorage devices which are to be embedded in cast-in-place concrete in ample time to prevent delay of that Work.
   2. Material shall be packed and shipped in corrugated carton.

B. Storage and Protection:
   1. Store materials to permit easy access for inspection and identification. Keep all material off the ground, using pallets, platforms, or other supports. Protect steel members and packaged materials from corrosion and deterioration.
   2. Store all materials in covered storage off the ground and prevent condensation and in accordance with the manufacturer's recommendations for long-term storage.
   3. Store material in clean, dry area, out of the weather.
   4. Material shall be tightly covered to protect against dirt, water, mechanical injury or chemical damage.
   5. Material shall remain in original cartons until time of installation.

C. Acceptance at Site:
   1. All boxes, crates and packages shall be inspected by Contractor upon delivery to the Site. Contractor shall notify ENGINEER, in writing, if any loss or damage exists to equipment or components. Replace loss and repair damage to new condition in accordance with manufacturer's instructions.

PART 2 PRODUCTS

2.01 DESIGN CRITERIA

A. Insulation systems including covering, mastics, adhesives, sealers and facings shall have the following fire hazard classifications:
   1. Flame Spread: 25 maximum.
   2. Fuel Contributed: 50 maximum.
   3. Smoke Developed: 50 maximum.

2.02 MATERIALS

A. Fiberglass Insulation:
   1. Type: Heavy-density sectional pipe insulation with vapor barrier and self-sealing lap.
   2. Density: Four pounds per cubic foot.
   3. R-Value Minimum: 4.0 hr.-ft2-°F/BTU.
   4. Fittings: Molded fiberglass.
   5. Jointing Materials: Manufacturer’s recommended adhesives and tape.
   6. Valve Insulation: Miter cut nesting size covering segments of same thickness as pipeline, for insulation of valves.
   7. Products and Manufacturers: Provide one of the following:
      a. Owens Corning Fiberglass Corporation, Fiberglass 25ASJ/SSL.

b. Certain-Teed Products Corporation, Certain Teed snap-on ASJ-SSL.
c. Or approved equal.

B. Weatherproof Insulation Jacket (for insulated pipes and equipment located outdoor exposed to outside ambient conditions):
1. Type: Smooth embossed aluminum metal jacket.
2. Thickness: 0.016-inches.
3. Moisture Barrier: Polycraft.
4. Fastening: Pre-formed "Z"-lock seam with 2-inch butt strap with sealant.
5. Bands: 1/2-inch aluminum bands with wing seals.
6. Fittings:
   a. Type: Pre-fabricated aluminum fittings.
   b. Thickness: 0.016-inches.
7. Manufacturers: Provide products of one of the following:
   a. Certain-Teed Products Corporation.
   b. Childers Products Company, Lock-On and Slip-On.
   c. Or approved equal.

2.03 SOURCE QUALITY CONTROL

A. Source Quality Control: Perform the following tests and inspections at the factory:
1. Flame spread.
2. Smoke developed.
3. Fuel contributed.

PART 3 EXECUTION

3.01 INSPECTION

A. Ensure that surfaces of all equipment including pipes, valves, and fittings are clean and dry before applying insulation.

3.02 PREPARATION

A. Ensure that piping and equipment has been tested, inspected and released for application of insulation.

3.03 INSTALLATION

A. Pipe insulation shall be continuous through walls and floor openings, except where walls or floors are required to be firestopped or required to have a fire resisting rating.

B. Where hangers are in direct contact with piping the hanger and supporting rod shall be wrapped with foil-faced blanket insulation and vapor sealed. Hanger rod insulation and vapor barrier shall extend up to the rod a minimum distance equal to the diameter of the pipe.

C. Install insulation so as to make surfaces smooth, even, and substantially flush with adjacent insulation.

D. Follow manufacturer's application instructions for all materials used.

E. Provide insulation protection shields for insulated piping supported by pipe hangers.

F. Install and coat insulation in accordance with the manufacturer's recommendations.

G. Weatherproofing for Outdoor Pipe and Equipment Insulation:
   1. Piping: Apply field applied jacket with moisture barrier around pipe or equipment and slip edge into preformed Z lock position to shed water. Butt next jacket section leaving approximately 3/8-inch gap. Place preformed 2-inch butt strap with sealant over the seam and secure with 1/2-inch aluminum band and wing seal.
   2. Fittings: Apply prefabricated metal fittings identical in composition to pipe jacketing.

3.04 FIELD QUALITY CONTROL

A. Ensure that insulation is dry when installed, and before and during application of any finish.

B. Protection:
   1. All material applied in one day shall have the vapor barrier applied the same day and any exposed ends shall be temporarily protected with a moisture barrier and sealed to the pipe.

3.05 SCHEDULE

A. Refer to Schedule below for minimum thickness of pipe insulation:

Pipe Size (inches)	Minimum Insulation Thickness (inches)
Exterior Piping	1-1/2 thick w/weatherproof jacket.

B. Where part of existing piping is removed, the remaining piping shall be capped watertight and covered with insulation. Any existing piping insulation damaged shall be patched.

END OF SECTION

SECTION 15102

PROCESS VALVES, SMALLER THAN FOUR-INCH DIAMETER

PART 1 GENERAL

1.01 DESCRIPTION

A. Scope:
   1. Contractor shall provide all labor, materials, equipment and incidentals as shown, specified and required to furnish and install water valves smaller than 4 inches, complete and operational.

B. Coordination:
   1. Review installation procedures under this and other Sections and coordinate the installation of items that must be installed with, or before the Work required under this Section.

1.02 REFERENCES

A. Standards which may be referenced in this Section are:
   1. American Water Works Association (AWWA):
      a. ANSI/AWWA C540, Power-Actuating Devices for Valves and Slide Gates.
      b. ANSI/AWWA C550, Protective Interior Coatings for Valves and Hydrants.
   2. Other:
      a. ANSI/NSF 61 Drinking Water Components – Health Effects.

1.03 QUALITY ASSURANCE

A. Manufacturer's Qualifications:
   1. Manufacturer shall be able to provide evidence of at least five installations of substantially similar valves in satisfactory operation for at least five years.

B. Component Supply:
   1. Valves of the same type shall be the products of a single manufacturer.

1.04 SUBMITTALS

A. Action Submittals: Submit the following:
   1. Product Data:
      a. Product data sheet.
      b. Complete catalog information, including dimensions, weight, specifications, and identification of materials of construction of parts.

B. Informational Submittals: Submit the following:
   1. Certifications: Submit a certificate signed by the manufacturer of each product stating that the product complies with the applicable referenced standards.

1.05 DELIVERY, STORAGE AND HANDING

A. Packing, Shipping, Handling and Unloading:
   1. Deliver materials to the Site to ensure uninterrupted progress of the Work.

B. Storage and Protection:
   1. Protect materials from corrosion and deterioration.
   2. Store equipment in covered storage off the ground and prevent condensation and in accordance with the manufacturer's recommendations for long-term storage.

PART 2 PRODUCTS

2.01 GENERAL

A. Extent:
   1. Provide all valves included in this Section that are shown on the Drawings.
   2. Valves described in the detailed specifications which follow may not be required for every project. Provide only those valves shown on the Drawings.

B. Requirements:
   1. Pressure Rating: Unless otherwise specified, valves shall be rated at the greater of 80 psi at 100ºF or the working pressure of the pipe in which the valve is installed.
   2. Service, size and type: Provide as shown on drawings.
   3. Power Actuators: Provide where shown on drawings. Type of actuator and actuator features shall be as shown on drawings.

C. Closing Direction:
   1. Handles on manual valves and on auxiliary manual controls on power actuated valves shall turn clockwise to close.

D. Markings:
   1. Direction to turn to open the valves shall be permanently marked on manual valves and auxiliary manual actuators.
   2. Direction of flow shall be permanently marked on all valves including check and control valves which must be installed in the proper orientation to function properly.
   3. Manufacturers name and rated pressure shall be cast on the valve body in raised letters.

E. Actuators for Exposed Valves:
   1. Actuators shall conform to the applicable requirements of this Section.
   2. Provide manual actuators unless power actuating devices are shown on the drawings.
   3. Provide position indicators.

4. Manual actuators:
   a. Unless otherwise shown or specified provide lever actuators for quarter turn valves not equipped with gear drives and handwheels for all other valves.
   b. Provide accessories (special features) which may include locking devices and limit switches where shown or specified.
5. Power actuating devices:
   a. Provide where shown or specified.
   b. Provide accessories (special features) which may include position transmitters, positioners, and limit switches where shown or specified.

F. Regulatory Requirements:
1. Valves that convey potable water or water that will be treated to become potable shall be certified as being suitable for contact with drinking water by an accredited organization in accordance with ANSI/NSF 61 requirements.
2. Materials in contact with potable water or water that will be treated to become potable shall also meet the requirements of the regulatory agencies having jurisdiction at the location of the installation.

2.02 WATER/CHEMICAL SERVICE VALVES

A. Thermoplastic Ball Valves:
1. Manufacturer:
   a. Hayward Industrial Products, Inc.
   b. Or approved equal.
2. Type: Flanged, full port.
3. Body and Ball: PVC
4. Ball: Vented for sodium hypochlorite service.
5. Seals, Seats and O-rings: Viton.
6. End Connections: Socket solvent welded unions or flanges as required.
7. Rating: 150 psig at 73 F.

B. Thermoplastic Ball Check Valves:
1. Type: Flanged, ball
2. Body and Ball: PVC
3. Seals, Seats, and O-rings: Viton
4. End connections: Socket solvent welded unions or flanges as required.
5. Rating: 150 psig at 73 F.
6. Materials compatible with sodium hypochlorite service.

C. Pressure Relief Valves:
1. Body: PVC.
2. Seats: Teflon.
3. Seals: Teflon.
4. Spring: Stainless Steel.
5. Pressure: set to 85 psi maximum pressure.
6. Manufactures:
   a. APCO.
   b. Plast-O-Matic.
   c. Or approved equal.

D. Degassing Valves:
   1. Degassing valves shall be placed at high points in sodium hypochlorite system, high points in sodium hypochlorite pipes, in isolated runs of sodium hypochlorite pipe, and as shown on the drawings.
   2. Degassing valve materials shall be compatible with sodium hypochlorite and gasses produced by sodium hypochlorite. Chemical compatibility shall be confirmed in writing by sodium hypochlorite degassing valve manufacturer.
   3. Degassing valve manufacture shall confirm adequate sizing of sodium hypochlorite degassing valves provided for the systems on which they will be installed.
   4. Manufacturers:
      a. Plast-O-Matic
      b. Accu-vent
      c. Or approved equal.

2.03 APPURTENANCES AND MISCELLANEOUS ITEMS

A. Basket Strainers:
   1. Manufacturer:
      a. Hayward Industrial Products, Inc.
      b. Or approved equal.
   2. Body: PVC, flanged ends.
   3. Seals: EPDM

B. Y-Strainers:
   1. Body: PVC, flanged, ends.
   2. Screens: PVC, No. 20 mesh, 2.5 times inlet area.
   3. Rating: 125 psig

C. Quick Connect Couplings- Chemical Service:
   1. Type: Dual cam and groove, male end dimensionally similar to MIL-C-27487, with dust cap, Type 316 stainless steel chain and lock.
   2. Body: Polypropylene
   3. Cam Arms: Type 316 stainless steel.
   4. Gaskets: Ethylene Propylene Dienne Thermopolymer (EPDM)
   5. End Connections: Solvent socket welded.

D. Electric Motor Actuators:
   1. Standard: ANSI/AWWA C540.
   2. Type: Open-Close, reversing.
   3. Open-Close time for ball valves: 10 seconds.
   4. Housing: NEMA 4X with corrosion resistant epoxy coating.
   5. Power: 120 volt, 60 hz, single phase.
   6. SPDT switches shall be provided for remote valve position indication.
   7. Space heater and thermostat shall be provided in the housing.
   8. Integral thermal overload protection shall be provided with automatic reset.

2.04 FINISHING

A. All valves and appurtenances shall be painted in accordance with Section 09901, Protective Coatings.

PART 3 EXECUTION

3.01 INSTALLATION

A. Install valves and appurtenances in accordance with the manufacturer's instructions.

B. Comply with appendices of AWWA reference standards, where applicable.

C. Install valves so that operating handwheels or levers can be conveniently turned from operating floor without interfering with access to other valves and equipment, as approved by Engineer. Mount valves so that indicator arrows are visible from floor level.

D. For motor-operated valves located lower than five feet above the operating floor, orient the motor actuator to permit easy access to the pushbuttons and the handwheel.

E. Install valves plumb and level. Install valves to be free from distortion and strain caused by misaligned piping, equipment or other causes.

F. Valve Tags: Provide valve tags.

G. Adjust all parts and components as required for correct operation of the valves.

3.02 FIELD QUALITY CONTROL

A. Site Tests:
   1. After installation at the Site, perform functional test on each valve in presence of Engineer. Test shall demonstrate that each valve operates correctly.

END OF SECTION

SECTION 15121

PIPE COUPLINGS

PART 1 GENERAL

1.01 SUMMARY

A. Section includes:
1. Pipe couplings for ductile iron piping.
2. Pipe couplings for steel piping.
3. Pipe couplings for stainless steel piping.

B. Related sections:
1. The Contract Documents are complementary; what is called for by one is as binding as if called for by all.
2. It is the Contractor's responsibility for scheduling and coordinating the Work of subcontractors, suppliers, and other individuals or entities performing or furnishing any of Contractor's Work.
3. The following Sections are related to the Work described in this Section. This list of Related Sections is provided for convenience only and is not intended to excuse or otherwise diminish the duty of the Contractor to see that the completed Work complies accurately with the Contract Documents.
   a. Section 01330 – Submittal Procedures.
   b. Section 09901 – Protective Coatings.

1.02 REFERENCES

A. American National Standards Institute (ANSI).

B. American Society of Mechanical Engineers (ASME):
1. B31.1 – Power Piping.
2. B31.9 – Building Services Piping.

C. American Water Works Association (AWWA):
1. C111 – Standard for Rubber-Gasket Joints for Ductile-Iron Pressure Pipe and Fittings.
2. C207 – Standard for Steel Pipe Flanges for Waterworks Service – Sizes 4 In. Through 144 In.
3. C606 – Standard for Grooved and Shouldered Joints.

D. ASTM International (ASTM):
1. A 36 – Standard Specification for Carbon Structural Steel.
2. A 53 – Standard Specification for Pipe, Steel, Black and Hot-Dipped, Zinc-Coated, Welded and Seamless.
3. A 193 – Standard Specification for Alloy Steel and Stainless Steel Bolting Materials for High Temperature or High Pressure Service and Other Special Purpose Applications.

4. A 325 – Standard Specification for Structural Bolts, Steel, Heat Treated, 120/105 ksi Minimum Tensile Strength.
5. A 351 – Standard Specification for Castings, Austenitic, for Pressure-Containing Parts.
6. A 449 – Standard Specification for Hex Cap Screws, Bolts and Studs, Steel, Heat Treated, 120/105/9 ksi Minimum Tensile Strength, General Use.
7. A 536 – Standard Specification for Ductile Iron Castings.
8. A 576 – Standard Specification for Steel Bars, Carbon, Hot-Wrought, Special Quality.
9. F 593 – Standard Specification for Stainless Steel Bolts, Hex Cap Screws, and Studs.
10. F 594 – Standard Specification for Stainless Steel Nuts.

E. NSF International (NSF).
1. 61 – Drinking Water System Components – Health Effects.

1.03 SUBMITTALS

A. Submit as specified in Section 01330.

B. Product data:
1. Shop drawings, detailing dimensions, and materials.
2. Piping layout drawings: Coordinate preparation of required piping layout drawings to show coupling sizes.

C. Provide vendor operation and maintenance manual. Furnish bound sets of installation, operation, and maintenance instructions for each type of manual valve 4 inch in nominal size and larger, and all non-manual valves. Include information on valve operators.

D. Provide Manufacturer’s Certificate of Source Testing.

E. Provide Manufacturer’s Certificate of Installation and Functionality Compliance.

PART 2 PRODUCTS

2.01 GENERAL

A. Known acceptable manufacturers are listed by specific products.

B. Provide references as specified in this Section by specific product.

C. Manufacturer’s requirements and those in this Section by specific product.

D. Gaskets for flexible couplings and flanged coupling adapters:
1. Provide gasket materials for piping applications as follows:
   a. Low-pressure and high-pressure air, steam, hot water: EPDM.
   b. All other piping applications: EPDM.

E. Exterior coatings for underground and submerged applications:
   1. Manufacturers: One of the following or equal:
      a. Tapecoat Company, Inc., T.C. Mastic.
      b. Kop-Coat Company, Inc., Bitumastic Number 50.
   2. Thickness: Minimum 0.040 inch.

2.02 PIPE COUPLINGS FOR DUCTILE IRON PIPING

A. Dismantling joints:
   1. Manufacturers: One of the following or equal:
      a. Romac Industries, Inc., Style DJ400.
      b. Smith-Blair, Inc., Series 975.
   2. Materials:
      a. Flanged spool:
         1) AWWA C207 steel pipe:
            a) ASTM A 53 for sizes 3 inches to 12 inches.
            b) ASTM A 36 for sizes 14 inches to 72 inches.
      b. End ring and body:
         1) For sizes 3 inches to 12 inches, ductile iron in accordance with ASTM A 536.
         2) For sizes 14 inches to 72 inches, steel in accordance with ASTM A 36 or A 53.
      c. Follower ring: Ductile iron in accordance with ASTM A 536.
      d. Bolts and hex nuts:
         1) Aboveground: High strength, low alloy steel in accordance with AWWA C111.
         2) Buried and underwater: Type 316 stainless steel bolts in accordance with ASTM F 593.
      e. Tie rods: High tensile steel in accordance with ASTM A 193 Grade B7.
   3. Flange design: Class D steel ring flange in accordance with AWWA C207, compatible with ANSI Class 125 and 150 bolt circles.
   4. Coating and lining: Manufacturer's standard fusion bonded epoxy, NSF 61 certified.

B. Flanged coupling adapters: 12-inch size and smaller:
   1. Manufacturers: One of the following or equal:
      a. Dresser, Inc., Style 227.
      b. Romac Industries, Inc., Style FCA501.
      c. Smith-Blair, Inc., Series 912.
   2. Materials:
      a. Flanged body: Ductile iron in accordance with ASTM A 536.
      b. Follower ring: Ductile iron in accordance with ASTM A 536.
      c. Bolts and hex nuts:
         1) Aboveground: High strength, low alloy steel in accordance with AWWA C111.
         2) Buried and underwater: Type 316 stainless steel bolts in accordance with ASTM F 593.
   3. Flange design: Class D steel ring flange in accordance with AWWA C207 compatible with ANSI Class 125 and 150 bolt circles.

4. Coating and lining: Manufacturer's standard fusion bonded epoxy, NSF 61 certified.

C. Flanged coupling adapters: Greater than 12-inch size:
1. Manufacturers: One of the following or equal:
   a. Dresser, Inc., Style 128-W.
   b. Romac Industries, Inc., Style FC400.
   c. Smith-Blair, Inc., Series 913.
2. Materials:
   a. Flange and flanged body: Ductile iron or low carbon steel having a minimum yield strength of 30,000 pounds per square inch.
   b. Follower ring: Low carbon steel having a minimum yield strength of 30,000 pounds per square inch.
   c. Bolts and hex nuts:
      1) Aboveground: High strength, low alloy steel in accordance with AWWA C111.
      2) Buried and underwater: Type 316 stainless steel bolts in accordance with ASTM F 593.
3. Flange design: Class D steel ring flange in accordance with AWWA C207 compatible with ANSI Class 125 and 150 bolt circles.
4. Coating and lining: Manufacturer's standard fusion bonded epoxy, NSF 61 certified.

D. Flexible couplings:
1. Manufacturers: One of the following or equal:
   a. Dresser, Inc., Style 253.
   b. Romac Industries, Inc., Style 501.
   c. Smith-Blair, Inc., Series 441.
2. Materials:
   a. Center rings: Ductile iron in accordance with ASTM A 536.
   b. Follower rings: Ductile iron in accordance with ASTM A 536.
   c. Bolts and hex nuts:
      1) Aboveground: High strength, low alloy steel in accordance with AWWA C111.
      2) Buried and underwater: Type 316 stainless steel in accordance with ASTM F 593.
3. Coating and lining: Manufacturer's standard fusion bonded epoxy, NSF 61 certified.
4. Center sleeve dimensions: Provide center sleeves with lengths in accordance with following table:

Nominal Pipe Size	**Sleeve Length**
3 inch and smaller	Manufacturer's standard
4 inch through 8 inch	7 inches
10 inch through 14 inch	12 inches
Greater than 16 inch	Use steel flexible coupling per Pipe Couplings for Steel Piping

E. Restrained flange coupling adapter:
   1. Manufacturers: One of the following or equal:
      a. Romac Industries, Inc., Style RFCA.
      b. Star Pipe Products, 3200 StarFlange.
   2. Materials:
      a. Flange and flanged body: Ductile iron in accordance with ASTM A 536.
      b. Follower ring: Lug type restraint system.
         1) Follower ring: Ductile iron in accordance with ASTM A 536.
         2) Restraining lugs: Ductile iron in accordance with ASTM A 536.
            a) Designed to contact the pipe and apply forces evenly.
         3) Restraining bolts:
            a) Ductile iron in accordance with ASTM A 536.
            b) Bolt heads shall be designed to twist off when the proper torque has been applied.
      c. Bolts and hex nuts:
         1) Aboveground: High strength, low alloy steel in accordance with AWWA C111.
         2) Buried and underwater: Type 316 stainless steel bolts in accordance with ASTM F 593.
   3. Flange design: Class D steel ring flange in accordance with AWWA C207 compatible with ANSI Class 125 and 150 bolt circles.
   4. Coating and lining: Manufacturer's standard fusion bonded epoxy, NSF 61 certified.
   5. Angular deflection: Restrained flange coupling adapter must allow angular deflection after assembly.

F. Grooved joint couplings:
   1. Manufacturers:
      a. Victaulic Company, Series 31 or equal.
   2. Materials:
      a. Housings: Ductile iron in accordance with ASTM A 536.
      b. Gasket: FlushSeal® type, or equal. Elastomer in accordance with ASTM D 2000.
      c. Bolts and nuts: Electroplated steel in accordance with ASTM A 449.
      d. Coating: As specified in Section 09901.
   3. For use with rigid or flexible radius grooved components in accordance with AWWA C606.
   4. For connection to IPS steel pipe sizes, Victaulic Style 307.

2.03 PIPE COUPLINGS FOR STEEL PIPING

A. Dismantling joints:
   1. Manufacturers: One of the following or equal:
      a. Romac Industries, Inc., Style DJ400.
      b. Smith-Blair, Inc., Series 975.
   2. Materials:
      a. Flanged spool:
         1) C207 Schedule 40 pipe in accordance with ASTM A 53 for sizes 3 inches to 12 inches.

2) Steel for pipe in accordance with ASTM A 36 or A 53 for sizes 14 inches to 72 inches.

b. End ring and body:
1) For sizes 3 inches to 12 inches, ductile iron in accordance with ASTM A 536.
2) For sizes 14 inches to 72 inches, steel in accordance with ASTM A 36.

c. Follower ring: Ductile iron in accordance with ASTM A 536 or steel in accordance with ASTM A 36 or A 576.

d. Bolts and hex nuts:
1) Aboveground: High strength, low alloy steel in accordance with AWWA C111.
2) Buried and underwater: Type 316 stainless steel bolts in accordance with ASTM F 593.

e. Tie rods: High tensile steel in accordance with ASTM A 193 grade B7.

3. Flange design: Class D steel ring flange in accordance with AWWA C207 compatible with ANSI Class 125 and 150 bolt circles.

4. Coating and lining: Fusion bonded epoxy certified in accordance with NSF 61.

B. Flanged coupling adapters:

1. Manufacturers: One of the following or equal:
a. Dresser, Inc., Style 128-W.
b. Romac Industries, Inc., Style FCA501 (10 inch and smaller) or Style FC400 (12 inch and larger).
c. Smith-Blair, Inc., Series 913.

2. Materials:
a. Flange and flanged body: Ductile iron or low carbon steel having a minimum yield strength of 30,000 pounds per square inch.
b. Follower ring: Low carbon steel having a minimum yield strength of 30,000 pounds per square inch.
c. Bolts and hex nuts:
1) Aboveground: High-strength, low-alloy steel in accordance with AWWA C111.
2) Buried and underwater: Type 316 stainless steel bolts in accordance with ASTM F 593.

3. Flange design: Class D steel ring flange in accordance with AWWA C207 compatible with ANSI Class 125 and 150 bolt circles.

4. Coating and lining: Manufacturer’s standard fusion bonded epoxy, NSF 61 certified.

C. Flexible couplings:

1. Manufacturers: One of the following or equal:
a. Dresser, Inc., Style 38.
b. Smith-Blair, Inc., Series 411.
c. Romac Industries, Inc., Style 511 or Style 400.

2. Materials:
a. Center sleeve and follower flanges: Ductile iron or low carbon steel having a minimum yield strength of 30,000 pounds per square inch.

b. Bolts and hex nuts:
   1) Aboveground: High strength, low alloy steel in accordance with AWWA C111.
   2) Buried and underwater: Type 316 stainless steel bolts in accordance with ASTM F 593.

3. Coating and lining: Manufacturer's standard fusion bonded epoxy, NSF 61 certified.
4. Center sleeve dimensions: Provide center sleeves with lengths in accordance with following table:

Nominal Pipe Diameter	Sleeve Length
2-1/2 inch and smaller	Manufacturer's standard
3 inch through 6 inch	7 inch
8 inch through 14 inch	7 inch
Greater than 14 inches	10 inch

D. Restrained flange coupling adapters:
1. Manufacturers: One of the following or equal:
   a. Romac Industries, Inc., Style RFCA.
   b. Star Pipe Products, 3200 StarFlange.
2. Materials:
   a. Flange and flanged body: Ductile iron in accordance with ASTM A 536.
   b. Follower ring: Lug type restraint system.
      1) Follower ring: Ductile iron in accordance with ASTM A 536.
      2) Restraining lugs: Ductile iron in accordance with ASTM A 536. Designed to contact the pipe an apply forces evenly.
      3) Restraining bolts: Ductile iron in accordance with ASTM A 536. Bolt heads shall be designed to twist off when the proper torque has been applied.
   c. Bolts and hex nuts:
      1) Aboveground: High-strength, low-alloy steel in accordance with AWWA C111.
      2) Buried and underwater: Type 316 stainless steel bolts in accordance with ASTM F 593.
3. Flange design: Class D steel ring flange in accordance with AWWA C207 compatible with ANSI Class 125 and 150 bolt circles.
4. Coating and lining: Manufacturer's standard fusion bonded epoxy certified in accordance with NSF 61.

E. Grooved joint couplings:
1. Model numbers from one manufacturer are shown to indicate type only. Equivalent products of other manufacturers may be submitted for approval.
2. Coating: As specified in Section 09901.
3. Sizes through 12 inch:
   a. Rigid type:

1) Housings shall be cast with offsetting angle-pattern bolt pads to provide rigidity and system support and hanging in accordance with ASME B31.1 and B31.9.
2) 2 inch through 6 inch: Installation-ready, for direct stab installation without field disassembly, with grade EHP gasket rated to plus 250 degrees Fahrenheit.
3) Manufacturer: One of the following or equal:
   a) Victaulic Style 107.
   b) Victaulic Zero-Flex Style 07.

b. Flexible type:
1) For use in locations where vibration attenuation and stress relief are required.
2) Three flexible couplings may be used in lieu of a flexible connector.
3) The couplings shall be placed in close proximity to the source of the vibration.
4) Manufacturer: The following or equal: Victaulic Style 77.

c. Flange adapter:
1) Flat face, ductile iron housings with elastomer pressure responsive gasket, for direct connection to ANSI Class 125 or 150 flanged components.
2) Manufacturer: The following or equal: Victaulic Style 741.

4. Sizes 14 inch through 24 inch:
a. Victaulic AGS series with lead-in chamfer on housing key and wide width FlushSeal® gasket.
b. Rigid type:
1) Housing key shall fill the wedge shaped AGS groove and provide rigidity and system support and hanging in accordance with ASME B31.1 and B31.9.
2) Manufacturer: The following or equal: Victaulic Style W07.

c. Flexible type:
1) Housing key shall fit into the wedge shaped AGS groove and allow for linear and angular pipe movement.
2) Manufacturer: The following or equal: Victaulic Style W77.

d. Flange adapter:
1) Flat face, ductile iron housings with elastomer pressure responsive gasket, for direct connection to ANSI Class 125 or 150 flanged components.
2) Manufacturer: The following or equal: Victaulic Style W741.

5. For sizes 30 inch and larger:
a. Manufacturer: The following or equal: Victaulic Style AGS multiple-segment housing may be used.

F. Double-grooved joint high pressure couplings:
1. Manufacturers: Victaulic Company, Style 808.
2. Materials:
a. Housings: 2 ductile iron housings in accordance with ASTM A 536.
b. Gasket: Elastomer in accordance with ASTM D 2000.
1) Grade ‘N’ Nitrile.
2) Grade ‘T’ EndSeal type.

c. Bolts and nuts: Electroplated steel in accordance with ASTM A 449.

d. Coating: Manufacturer's standard: As specified in Section 09901.

3. Size range: 6 inch through 12 inch.
4. Operating pressure:

Size	Pipe Schedule	Max. Joint Working Pressure
6 inch	80	3000 psig (20690 kPa)
	160	4000 psig (27586 kPa)
8 inch	80	2500 psig (17241 kPa)
	160	3500 psig (24138 kPa)
10 inch	80	2500 psig (17241 kPa)
	160	3000 psig (20690 kPa)
12 inch	80	2000 psig (13793 kPa)
	160	2500 psig (17241 kPa)

5. For use with Victaulic double grooved fittings, manufactured of carbon steel pipe of the same schedule as the adjoining pipe.

G. Bolted, split-sleeve couplings:
1. Provide bolted, split-sleeve couplings where indicated on the Drawings or as an alternative to flexible couplings when approved by the Engineer for each individual case.
2. Split-sleeve type pipe coupling with double arch cross section:
   a. Coupling shall be designed to close around the pipe ends, confining the gaskets beneath the arches of the sleeve.
   b. A watertight, axial seal is created by tightening the bolts to pull the coupling against the outside wall of the pipe.
3. Coatings:
   a. Couplings shall be epoxy-coated on the inner diameter and outer diameter prior to delivery.
   b. Buried couplings shall receive additional protection against corrosion that matches the pipe as specified in Section 09901.
4. Couplings: Wall thickness that is adequate for the test pressure specified for piping.
   a. Provide split-sleeve type coupling in an-"expansion x expansion" configuration where indicated on the Drawings.
   b. Where restrained pipe joints are required or are indicated on the Drawings, provide split sleeve type coupling in a "fixed x fixed" configuration.
      1) Coordinate with coupling manufacturer and pipe supplier to provide restraint rings on pipe.
      2) Coupling manufacturer to supply the restraint rings.
   c. Where axial pipe expansion must be accommodated or where they are indicated on the Drawings, provide split-sleeve type coupling in a "fixed x expansion" configuration.
      1) Coordinate with coupling manufacturer and pipe supplier to provide restraint ring on fixed side of coupling.
      2) Coupling manufacturer to supply the restraint rings.
   d. Axial restraint and angular deflection:

1) Where axial restraint is required to resist pipe thrust and angular deflection is required to provide flexibility in the piping or where they are indicated on the Drawings, provide split-sleeve type coupling in a "fixed x fixed modified" configuration.
2) Install coupling with manufacturer's recommended-gap between ends of piping with the shoulders of coupling bearing on the inner restraint rings that are welded to the piping at both ends of coupling.
3) Coupling shall be designed for an angular deflection of not less than the angular defection indicated in the following table unless a larger angular deflection in indicated on the Drawings.

Nominal Pipe Diameter	Allowable Angular Deflection
18 inch and smaller	3 degrees
20 inch	2.5 degrees
24 inch	2 degrees
30 inch	1.75 degrees
36 inch	1.5 degrees
42 inch	1.25 degrees
48 and 54 inch	1 degree
60 inch	0.875 degrees
66 and 72 inch	0.75 degrees

5. Restraint rings:
   a. Provide where required to create a restrained joint.
   b. Coordinate with piping manufacturer.
   c. Shop fabricate pipe with restraint rings that engage the interior edge of the coupling shoulder. Weld for restraint ring: Suitable for test pressures specified for piping.
6. Gaskets: The sealing members are comprised of two O-ring gaskets. Internal pressure shall not be required to affect the seal. For water service, the gasket supplied shall be Isoprene or Buna-N in accordance with ASTM D 2000 for design pressure within temperature range of minus 20 to 180 degrees Fahrenheit.
   a. Elastomers shall have properties in accordance with ASTM D 2000.
7. Manufacturers: One of the following or equal:
   a. "Expansion x expansion" configuration: Victaulic, Depend Style 230 E x E.
   b. "Fixed x expansion" configuration: Victaulic, Style 230 E x E.
   c. "Fixed x fixed" configuration: Victaulic, Style 230 E x E.
   d. "Fixed x fixed modified" configuration: Victaulic, Style 230 E x E.
8. Materials:
   a. Couplings: Steel in accordance with ASTM A 36.
   b. Bolts and nuts: In accordance with ASTM A 325 and ASTM A 563.
9. Pipe preparation:
   a. Pipe ends shall be smooth for expansion or contraction requirements.
   b. Where thrust restraint is required or is indicated on the Drawings, pipe ends shall include restraint rings affixed for pipe end restraint requirements.

c. The coupling manufacturer shall provide restraint rings that shall be shop welded to the pipe in accordance with the manufacturer's requirements.
d. Follow coupling manufacturer's recommendation for size and amount of welding required to attach the restraint rings to the pipe.

H. Bolted, split-sleeve flanged adapter couplings:
1. Provide bolted, split-sleeve, flanged adaptor couplings where indicated on the Drawings or as an alternative to flexible coupling type flange adaptors when approved by the Engineer for each individual case.
2. Flanged adapter with split-sleeve type coupling with double arch cross section.
   a. Coupling shall be designed to confine the gaskets beneath the arches of the sleeve.
   b. A watertight, axial seal is created by tightening the bolts to pull the coupling together and seat the gaskets against the outside wall of the pipe and adapter.
3. Coatings:
   a. Couplings shall be epoxy-coated on the inner diameter and outer diameter prior to delivery.
   b. Buried couplings shall receive additional protection against corrosion that matches the pipe as specified in Section 09901.
4. Couplings: Wall thickness that is adequate for the test pressure specified for piping.
   a. Provide coupling in a "flanged x expansion" configuration where indicated on the Drawings.
   b. Where axial pipe movement must be restrained, provide coupling in a "flanged x fixed" configuration. Coordinate with pipe supplier to provide restraint ring on fixed side of coupling.
   c. Where axial restraint is required to resist pipe thrust and angular deflection is required to provide flexibility in the piping, provide sleeve type coupling in a "flanged fixed x fixed modified" configuration.
      1) Install coupling with full 1-1/2-inch gap between ends of pipe with shoulder of coupling bearing on ring welded to pipe at both ends of coupling.
      2) Coupling shall be designed for an angular deflection of not less than the angular deflection indicated in the following table unless a larger angular deflection in indicated on the Drawings.

Nominal Pipe Diameter	Allowable Angular Deflection
18 inch and smaller	3 degrees
20 inch	2.75 degrees
24 inch	2.375 degrees
30 inch	2 degrees
36 inch	1.5 degrees
42 inch	1.375 degrees
48 and 54 inch	1 degree
60 and 66 inch	0.875 degrees
72 and 78 inch	0.75 degrees

5. Restraint rings:
    a. Provide where required to create a restrained joint.
    b. Coordinate with piping manufacturer.
    c. Shop fabricate pipe with restraint rings that engages the interior edge of the coupling shoulder. Weld for restraint ring: Suitable for test pressures specified for piping.
6. Gaskets:
    a. The sealing members are comprised of two O-ring gaskets. Internal pressure shall not be required to affect the seal.
    b. For water service, the gasket supplied shall be Isoprene or Buna-N in accordance with ASTM D 2000 for design pressure within temperature range of minus 20 to 180 degrees Fahrenheit.
    c. Elastomers shall have properties in accordance with ASTM D 2000.
7. Manufacturers: One of the following or equal:
    a. “Flanged x expansion” configuration: Victaulic, Depend-O-Lok, F x E, Type 2 Flanged Adapter Coupling.
    b. “Flanged x fixed” configuration: Victaulic, Depend-O-Lok, F x F, Type 2 Flanged Adapter Coupling.
    c. “Flanged x fixed modified” configuration: Victaulic, Depend-O-Lok, F x F, Type 2 Modified, Flange Adapter Coupling.
8. Materials:
    a. Couplings: Steel in accordance with ASTM A 36.
    b. Bolts and nuts: In accordance with ASTM A 325 and ASTM A 563.
9. Pipe preparation:
    a. Pipe ends shall be smooth for expansion or contraction requirements.
    b. Where thrust restraint is required or is indicated on the Drawings, pipe ends shall include restraint rings affixed for pipe end restraint requirements.
    c. The coupling manufacturer shall provide restraint rings that shall be shop welded to the pipe in accordance with the manufacturer’s requirements.
    d. Follow coupling manufacturer’s recommendation for size and amount of welding required to attach the restraint rings to the pipe.

2.04 PIPE COUPLINGS FOR STAINLESS STEEL PIPING

A. Flexible couplings:
    1. Manufacturers: One of the following or equal: Dresser, Inc., Style 38.

B. Grooved joint couplings:
    1. Manufacturers: One of the following or equal: Victaulic Company.
    2. Materials:
        a. Housings:
            1) Ductile iron in accordance with ASTM A 536.
            2) Stainless steel in accordance with ASTM A 351.
        b. Gasket: Elastomer in accordance with ASTM D 2000.
        c. Bolts and nuts:
            1) Electroplated steel in accordance with ASTM A 449.
            2) Stainless steel in accordance with ASTM F 593.
    3. Rigid type:
        a. Victaulic Style 89 and W89 (ductile iron housings).

b. Victaulic Style 489 (stainless steel housings).
4. Flexible type: Victaulic Style 77S.

C. Bolted, split-sleeve couplings:
1. Split-sleeve type pipe coupling with a fully stainless steel double arch cross section. Coupling shall be designed to close around the pipe ends, confining the gaskets beneath the arches of the sleeve. A watertight, axial seal is created by tightening the bolts to pull the coupling against the outside wall of the pipe.
2. Manufacturers: One of the following or equal:
a. “Expansion x expansion” configuration: Victaulic, Depend-O-Lok, E x E, Type 2 Coupling.
b. “Fixed x expansion” configuration: Victaulic, Depend-O-Lok, F x E, Type 2 Coupling.
c. “Fixed x fixed” configuration: Victaulic, Depend-O-Lok, F x F, Type 2 Coupling.
d. “Fixed x fixed modified” configuration: Victaulic, Depend-O-Lok, F x F, Type 2 Modified Restrained Coupling.
3. Materials:
a. Couplings: Stainless steel in accordance with ASTM A 240.
b. Bolts and nuts: In accordance with ASTM F 593 and ASTM F 594.
4. Pipe preparation:
a. Pipe ends shall be smooth for expansion or contraction requirements.
b. Where thrust restraint is required or is indicated on the Drawings, pipe ends shall include restraint rings affixed for pipe end restraint requirements.
c. The coupling manufacturer shall provide restraint rings that shall be shop welded to the pipe in accordance with the manufacturer’s requirements.
d. Follow coupling manufacturer’s recommendation for size and amount of welding required to attach the restraint rings to the pipe.

PART 3 EXECUTION

3.01 INSTALLATION

A. In underground and underwater installations, coat the exterior of coupling with a protective coating in accordance with manufacturer's instructions.

B. Joints and flexible connections shall be installed centered with no angular deflection unless otherwise indicated on the Drawings.

C. Flexible couplings and flange coupling adapters: Install with gap between pipe ends in accordance with the following table unless a greater gap is indicated on the Drawings. Maximum gap tolerance shall be within 1/8 inch.
1. Install flexible coupling with pipe gap located in middle of center sleeve.
2. Install flanged coupling adapter with end of plain end pipe in middle of flanged coupling body.

Center Ring Length	Gap Dimension and Tolerance
4 inch through 6 inch	3/8 inch
7 inch	5/8 inch
10 inch and greater	7/8 inch

D. Provide harnesses (tie-downs) for flexible couplings unless otherwise indicated on the Drawings with a written note. Design harnesses (tie-downs) for the test pressures as specified for piping.

E. Grooved joint couplings:
   1. Grooved ends: Clean and free from indentations, projections, and roll marks in the area from pipe end to groove.
   2. Gaskets: Elastomer grade suitable for the intended service, and molded and produced by the coupling manufacturer.
   3. Provide Manufacturer's Certificate of Installation and Functionality Compliance.

F. Bolted, split-sleeve couplings:
   1. Inspect each coupling to insure that there are no damaged portions of the coupling.
      a. Pay particular attention to the sealing pad/sealing plate area.
      b. Before installation, thoroughly clean each coupling of any foreign substance which may have collected thereon and shall be kept clean at all time.
   2. Wrenches:
      a. Conform to manufacturer instructions.
      b. Bolts and studs shall be tightened so as to secure a uniform gasket compression between the coupling and the body of the pipe with all bolts or studs tightened approximately the same amount.
      c. Final tightening shall be done by hand (no air impact wrenches) and is complete when the coupling is in uniform contact with the outside surface of the pipe all around the circumference of the pipe.
   3. No joint shall be misfit in any plane.
   4. On the fixed ends of bolted, split-sleeve couplings, the shoulders shall bear on the restraint rings all around with no visible gap.
   5. Ends of piping where coupler are installed shall be smooth and free of defects.
      a. Remove weld splatter and grind smooth.
      b. Grind pipe seam welds flush with pipe wall and smooth.

3.02 COMMISSIONING AND PROCESS START-UP REQUIREMENTS

A. Manufacturer(each) services for each type of pipe coupling:
   1. Provide Manufacturer's Certificate of Source Testing.

2. Provide Manufacturer's Certificate of Installation and Functionality Compliance.

			Manufacturer Rep Onsite					
	Training Requirements		Installation Testing		Functional Testing		Process Operational Period	
Source Testing (Witnessed or Non-witnessed)	Maintenance (hrs per session)	Operation (hrs per session)	Trips	Days (each trip)	Trips	Days (each trip)	Trips	Days (each trip)
Non-Witnessed	4	2	1	2	1	1	Not Required	

B. Functional Testing: Pressure testing as specified in applicable piping sections of these specifications.

END OF SECTION

SECTION 16010

BASIC ELECTRICAL REQUIREMENTS

PART 1 GENERAL

1.01 SECTION INCLUDES

A. Basic requirements specifically applicable to the work of Division 16 - Electrical Requirements.

B. The Contractor shall furnish all permits, equipment, materials, and labor for assembly and installation plus check out and start-up of electrical systems as shown on the Contract Drawings and stipulated in the Contract Specifications.

1.02 MEASUREMENT AND PAYMENT

A. No separate payment will be made for work performed under this Section.

1.03 REFERENCES

A. As a minimum requirement, the electrical system shall be constructed in accordance with:
   1. American National Standards Institute/National Fire Protection Association (ANSI/NFPA), No. 70 - National Electrical Code (NEC) as adopted by the City of Houston.
   2. City of Houston Building Code.
   3. Other applicable Codes and Standards.

B. Comply with local, county, state and federal regulations and codes in effect.

C. Equipment of foreign manufacture must meet U.S. codes and standards.

D. Equipment and materials shall conform to requirements of these specifications.

1.04 QUALITY ASSURANCE

A. Product Conformance Certificate and Quality Assurance Release. Submit an overall conformance certificate for electrical components signed by the person responsible for product quality.

B. Specifically identify the purchased material or equipment by project name and location, purchase order number, supplements, and item number where applicable, including materials and services provided by others. Indicate that all requirements have been met and identify any approved deviations.

C. Field Inspection
   1. Electrical work shall be inspected and approved by the local municipal code inspector, and the City Engineer prior to starting 7-day tests of equipment.
   2. Contractor shall give a minimum of one day's notice to the Inspector that the installation is ready for inspection and two days' notice to the City Engineer.
   3. Concealed work shall be inspected before it is covered:
      a. Conduit with stub-ups, underground in duct banks before concrete is poured.
      b. Conduit in slabs, walls and ceilings, complete with boxes.
   4. Electrical equipment and materials shall be inspected for compliance with specifications, upon arrival by the City Engineer.

1.05 SITE CONDITIONS

A. Take the following site conditions into consideration when fabricating, erecting, installing and wiring electrical equipment under this contract:
   1. Plant Location Houston
   2. Plant Type and Size Surface Water Plant
   3. Seismic Zone Zone 0
   4. Wind Velocity 135 mph
   5. Temperature, Min./Max.:
      a. Coldest Winter Month High - 60F Low - 41F
      b. Warmest Summer Month High - 94F Low - 73F
      c. Lowest Expected 11F
      d. Highest Expected 107F
   6. Rainfall:
      a. Annual 45 inches
      b. Design 3.4 inches/hour, 8.4 inches/24 hours
   7. Design Relative Humidity: 98%
   8. Station Barometric Pressure:
      a. Average Annual 29.5 inches Hg Absolute.

1.06 PRESENTATION OF INFORMATION ON DOCUMENTS

A. The electrical portion of this project was designed by several consulting engineering firms. There are variations among the consulting engineering firms in the way information is presented on the Contract Drawings. The Contractor shall disregard differences in the presentation of information by the consulting engineering firms and shall provide equipment and installations which conform to the intent of the Contract Drawings and Specifications.

1.07 SCHEDULED POWER OUTAGES

A. Existing electrical systems and equipment at this plant will be modified during this project. The Contractor shall study the Contract Documents and develop a schedule which identifies all power outages and power outage durations. The schedule of power outages shall be submitted no later than 120 days after NTP (Notice to Proceed). See Specification 01110, Summary of Work, for requirements related to power outages and limitations as to when such work can be performed.

1.08 COMPLETE SYSTEMS

A. Electrical drawings and specifications in the Contract Documents are intended to establish the types of systems and functions, but not to identify each item essential to functioning of the various systems. Electrical drawings are generally diagrammatic and show approximate locations and the basic extent of the electrical work. Install the work complete, including all items necessary to provide functional, complete working systems.

PART 2 PRODUCTS

2.01 COMPONENT DESIGN

A. Components utilized in the construction of the material or equipment shall be of the latest proven design, new and in current production. Do not use obsolete components or components to be phased out of production. Components must be of the most recent generation in current manufacture.

2.02 FACTORY INSPECTION

A. Provide free access with prior notice for the City Engineer at all times to the shop where the material or equipment is being fabricated or tested. Provide reasonable facilities for inspection, witnessing tests, and examining records. Give 7-days notice prior to starting tests scheduled for factory inspection.

PART 3 EXECUTION

3.01 PREPARATION

A. Verify dimensions and ratings of equipment and materials to ensure proper fit and performance.

3.02 INSTALLATION

A. Install equipment and materials in accordance with the Contract Drawings and manufacturer's written instructions. If field conditions necessitate changes in electrical installation, obtain approval from the City Engineer.

3.03 DEMONSTRATION

A. Test the electrical system to specification requirements and demonstrate correct installation and operation of equipment.

B. Before performing 7-day test on equipment and systems, demonstrate the system to the City Engineer. Show the system to be fully operational. All alarms, safeties, and communication points to control rooms and locally must operate in both full-automatic and back-up modes. Use fresh water as the test medium.

C. Operate the system continuously for a period of 7 days in full automatic, without failure, to qualify as acceptable. "Failure" is considered any problem that requires correction by maintenance personnel, such as: high or low water level, any motor alarm, power failure, phase failure, communication failure, PLC failure, or UPS failure. This would exclude conditions not under the control of Contractor, such as: evident lightning strikes, 25-year rains, Utility power failure longer than the specified duration of service from UPS. Failures due to uncontrollable situations would allow the 7-day test to continue, as soon as test conditions are restored and the City Engineer is notified.

D. The existing plant shall remain in service during tests.

END OF SECTION

SECTION 16060

ELECTRICAL DEMOLITION

PART 1 GENERAL

1.01 SECTION INCLUDES

A. Electrical Demolition. Electrical Demolition is as indicated on the Contract Drawings.

1.02 MEASUREMENT AND PAYMENT

A. No separate payment will be made for work performed under this Section.

1.03 REFERENCES

A. Temporary wiring of systems to maintain operation of facilities while undergoing modifications and demolition shall be provided in accordance with:
American National Standards Institute/National Fire Protection Association (ANSI/NFPA), No. 70 – National Electrical Code (NEC), Article No. 590 – Temporary Installations.

1.04 SUBMITTALS

A. Annotate existing drawings to sequence the demolition of systems, equipment removal, and temporary hook-ups.

B. Schedule with City Engineer for required shut downs to accommodate system demolition and installation of temporary facilities.

1.05 QUALITY ASSURANCE

A. Verify field measurements and circuiting arrangements are as shown on drawings.

B. Verify that abandoned wiring and equipment serve only abandoned facilities. Remove abandoned wiring and conduits.

C. Demolition items on the Contract Drawings are based on casual field observation and existing record documents. Report discrepancies to the City Engineer before disturbing existing installations.

D. By beginning demolition, installer accepts existing conditions and warrants that he will maintain service to equipment and items not scheduled or indicated for removal, and that he will return to the City all items and systems in good operating condition, or discard it at city option at no cost to the City.

PART 2 PRODUCTS

2.01 MATERIALS AND EQUIPMENT

A. Materials and equipment for patching and extending work: As specified in individual Sections.

2.02 DESIGN AND CONSTRUCTION

A. Temporary electrical wiring and facilities shall be designed and constructed in strict compliance with NEC - Article No. 590.

PART 3 EXECUTION

3.01 PREPARATION

A. Disconnect electrical systems in walls, floors, and ceilings scheduled for removal.

B. Coordinate power outages with Eastwater Purification Plant Manager to provide continuous service to operating equipment.

C. Provide temporary wiring and connections to maintain existing systems in service during construction. When work must be performed on energized equipment or circuits, use personnel experienced in such operations. Work to be carried out on energized equipment shall receive prior approval from the City Engineer.

D. Existing Electrical Equipment: Maintain existing system in service until new system is complete and ready for service. Disable system only to make switchovers and connections. Obtain permission from the City Engineer at least 21 days before partially or completely disabling system. Minimize outage duration.

3.02 DEMOLITION AND EXTENSION OF EXISTING ELECTRICAL WORK

A. Remove, relocate, and extend existing installations to accommodate new construction.

B. Remove abandoned wiring to source of supply, turn device off, mark as spare.

C. Remove exposed abandoned conduit, including abandoned conduit above accessible ceiling finishes. Cut conduit flush with walls and floors, and patch surfaces.

D. Disconnect abandoned outlets and remove devices. Remove abandoned outlets if conduit servicing them is abandoned and removed. Provide blank cover for abandoned outlets not removed.

E. Disconnect and remove abandoned panelboards and distribution equipment.

F. Disconnect and remove electrical devices and equipment serving utilization equipment that has been removed.

G. Repair adjacent construction and finishes damaged during demolition and extension work.

H. Maintain access to existing active installations. Modify installations or provide access panels as appropriate.

I. Extend existing installations using materials and methods as specified for new work.

3.03 DISPOSAL AND SALVAGE

A. When items are to be removed, first check with the City Engineer to determine if any items are to be salvaged. Deliver all items designated for salvage to the Electrical Maintenance Shop at the Administration Building at Ardmore Street.

B. Materials and equipment that are not designated to be salvaged shall be removed and properly disposed of by the Contractor.

3.04 CLEANING AND REPAIR

A. Clean and repair existing materials and equipment which remain or are to be reused.

B. Panelboards: Clean exposed surfaces and check tightness of electrical connections. Replace damaged circuit breakers and provide closure plates for vacant positions. Provide typed circuit directory showing revised circuiting arrangement.

END OF SECTION

SECTION 16111

CONDUIT, FITTINGS, AND BODIES

PART 1 GENERAL

1.01 SECTION INCLUDES

A. Specification for Conduit, Fittings and Bodies. See Specification Section 16402, Underground Duct Banks, for additional requirements.

1.02 MEASUREMENT AND PAYMENT

A. No separate payment will be made for work performed under this Section.

1.03 RELATED SECTIONS

A. Specification 16195, Electrical Identification.

B. Specification 16402, Underground Duct Banks.

1.04 REFERENCES

A. American National Standards Institute (ANSI)
   1. ANSI C80.1: Rigid Steel Conduit - Zinc Coated
   2. ANSI C80.3: Electrical Metallic Tubing - Zinc Coated
   3. ANSI C80.4: Fittings for Rigid Metal Conduit
   4. ANSI C80.5: Rigid Aluminum Conduit

B. Federal Specifications
   1. W-C-58C: Conduit Outlet Boxes, Bodies Aluminum and Malleable Iron
   2. W-C-1094: Conduit and Conduit Fittings Plastic, Rigid
   3. WW-C-566C: Liquid Tight Flexible Metal Conduit
   4. WW-C-581D: Coatings on Steel Conduit

C. National Electrical Manufacturers Association (NEMA)
   1. NEMA RN1: Polyvinyl-Chloride Externally Coated Galvanized Rigid Steel Conduit and Electrical Metallic Tubing
   2. NEMA TC2: Electrical Plastic Tubing (EPT) and Conduit (EPC-40 and EPC-80)
   3. NEMA TC3: PVC Fittings for Use with Rigid PVC Conduit and Tubing

D. National Fire Protection Association (NFPA), ANSI/NFPA 70 - National Electrical Code (NEC)

E. Underwriters' Laboratories (UL)
   1. UL 1: Liquid Tight Flexible Metal Electrical Conduit
   2. UL 6: Rigid Metal Electrical Conduit

3. UL 514B: Fittings for Conduit and Outlet Boxes
4. UL 651: Schedule 80 Rigid PVC Conduit
5. UL 651A: Type EB and A Rigid PVC Conduit and HDPE Conduit
6. UL 797: Electrical Metallic Tubing
7. UL 886: Electrical Outlet Boxes and Fittings for Use in Hazardous Locations
8. UL 1684: Reinforced Thermosetting Resin Conduit

1.05 SUBMITTALS

A. Submit the following under the provisions of Section 01330 - Submittal Procedures:
1. Manufacturer's cut sheets, catalog data
2. Installation, terminating and splicing procedure
3. Instruction for handling and storage
4. Dimensions and weight
5. Code compliance certificate
6. Conformance certificate

1.06 QUALITY ASSURANCE

A. Tests
1. Rigid steel conduit shall pass the bending, ductility, and thickness of zinc coating tests described by ANSI C80.1.
2. Liquid tight flexible conduit shall pass the tension, flexibility, impact, and zinc coating test described by UL 1.
3. Nonmetallic conduit and fittings shall pass the test requirements of NEMA TC2, UL 651 and 651A and Federal specification W-C-1094A.

1.07 DELIVERY STORAGE AND HANDLING

A. Package conduit in 10-foot bundles maximum, except for PVC conduits which may be up to 20 feet in length, with conduit and coupling thread protectors suitable for indoor and outdoor storage. Package fittings in manufacturer's standard quantities and packaging suitable for indoor storage.

B. Store conduit above ground on racks to prevent corrosion and entrance of debris.

PART 2 PRODUCTS

2.01 MATERIALS AND EQUIPMENT

A. Design Conditions. Use electrical conduit, fittings, and bodies designed for service in areas as specified in Section 16010 - Basic Electrical Requirements and this section to form a continuous raceway system for power, control, and instrument cables or any combination thereof.

B. Conduit and Fittings
   1. Rigid Aluminum Conduit and Fittings
      a. Rigid Aluminum Conduit, bends, nipples, bodies, etc., shall be manufactured from aluminum alloy 6063-T1 and shall comply with the latest ANSI C80.5 requirements.
      b. Fittings for Rigid Aluminum Conduit shall be cast aluminum with cast aluminum covers attached to the conduit fitting by stainless steel captive screws.
   2. Rigid Steel Conduit and Fittings
      a. Rigid Steel Conduit, bends, nipples, bodies, etc., shall be hot-dipped galvanized and shall comply with the latest ANSI C80.1, UL 6, Federal Specification WW-C-581D, and NEC Article 344.
      b. Mild steel tubing shall be used for conduit, nipples, and couplings, and shall be free of defects on both the inner and outer surfaces.
      c. Fittings and bodies and covers for rigid steel conduit shall be steel or cast-iron and shall comply with ANSI C80.4, UL 514B, and Federal Specification W-C-58C.
   3. Electrical Metallic Tubing and Fittings
      a. Electrical Metallic Tubing (EMT) shall be galvanized steel tubing and shall comply with the latest ANSI C80.3 and UL 797 requirements.
      b. EMT fittings shall be galvanized malleable iron or steel compression type which tighten around the tubing by use of hex compression nuts. EMT connectors shall have insulated throats. Zinc or pot metal compression fittings are not acceptable. Set screw EMT fittings are also not acceptable.
   4. Liquid Tight Flexible Metal Conduit and Fittings
      a. Use liquid tight flexible metal conduit with spiral-wound, square locked, hot dip galvanized steel strip, manufactured in accordance with UL 1 and Federal specification WW-C-566C.
      b. Fittings used with liquid tight flexible metal conduit shall be galvanized steel or malleable iron and of such design as to thoroughly ground the conduit to the fittings, and through it to the box or enclosure to which it is attached.
      c. Liquid tight flexible couplings and fittings for use in hazardous areas shall comply with UL 886, NEC Article 501, and Federal Specification W-C-586C.
   5. PVC Conduit and Fittings. Use PVC conduit, bends, and fittings, which comply with NEMA TC2, W-C-1094, and NEC Article 352 for above ground and underground installation. Conduit shall be Schedule 40 where conduit is concrete encased and Schedule 80 for all other applications.
   6. Epoxy Fiberglass Conduit and Fittings
      a. Use epoxy fiberglass conduit, bends and fittings which comply with UL 1684 and NEC Article 352 for underground applications.
      b. Where used for bends greater than 15 degrees in underground duct bank conduits, provide epoxy fiberglass bends with a deep socket PVC coupling factory attached to each end of each bend.

c. When used for stub-ups, provide an epoxy fiberglass elbow with a vertical epoxy fiberglass nipple to extend the conduit upward to a termination point. Join the elbow to the nipple with an epoxy fiberglass straight socket connection joined with epoxy adhesive. On the top of the epoxy fiberglass nipple, provide an epoxy fiberglass conduit adapter to transition to rigid aluminum conduit. On the underground end of the epoxy fiberglass elbow, provide a factory attached deep socket PVC coupling to transition to Schedule 40 PVC conduit.
d. Epoxy fiberglass conduit shall have a wall thickness of 0.070” for sizes ¾” through and including 4” conduit. A wall thickness of 0.096” shall be provided for 5” epoxy fiberglass conduit.
e. An acceptable manufacturer of epoxy fiberglass conduit is Champion Fiberglass, 6400 Spring Stuebner Road, Spring, TX 77389, 281-655-8900.

PART 3 EXECUTION

3.01 PREPARATION

A. Ensure that the conduit system to be installed is sized properly for the cable and wire requirements.

B. Verify the actual physical conduit route from the conduit plan drawings and prepare the conduit support system.

C. Verify the equipment locations to which the conduit will be connected and determine detail requirements for connections.

3.02 INSTALLATION

A. Install Rigid Aluminum Conduits in all indoor and outdoor locations, unless a different type of conduit is identified below for a specific application. The minimum bending radius for Rigid Aluminum Conduits containing 5 kV and higher voltage cables shall be 36” for conduits 4” and smaller and 48” for conduits 5” and larger. If smaller radius bends are required at a particular location for Rigid Aluminum Conduits containing 5 kV and higher voltage cables, secure approval from the City Engineer before proceeding with smaller radius bends. For metal conduits with 600 volt and lower voltage cables, use “large radius elbows”. The minimum radius for “large radius metal elbows” shall be: 12” for conduits 1” and smaller; 18” for 1-1/4”, 1-1/2” and 2” conduits; 24” for 2-1/2” and 3” conduits; 30” for 3-1/2” and 4” conduits; and 36” for 5” conduits.

B. Install Schedule 80 PVC conduits in all indoor areas where chemicals are stored, metered, pumped or processed.

C. Install Rigid Steel Conduits inside valve vaults and valve manholes.

D. Install Schedule 40 PVC conduits for all underground applications including all single conduits, duct banks, and where conduits are encased in concrete slabs. See Specification 16402, Underground Duct Banks, for additional requirements. The minimum bending radius for underground Schedule 40 PVC conduits shall be: 24” for conduits 2” and smaller; 36” for 2-½” and 3” conduits; and 48” for conduits larger than 3”. For stub-ups, use epoxy fiberglass elbows with an appropriate length epoxy fiberglass nipple to extend the conduit to the surface of the concrete or 12” above grade where concrete will not be poured. Install a conduit adapter with threaded plug flush with the top surface of the concrete or 12” above grade in dirt areas where concrete will not be poured. The threaded plug shall be removed when the conduit is extended. Where stub-ups are in dirt, concrete encase PVC conduits 6” above grade.

E. EMT conduits shall only be used where concealed in walls of air conditioned rooms or above lay-in ceilings in air conditioned rooms. EMT conduits shall not be installed exposed at any locations.

F. Run exposed conduit parallel or perpendicular to walls, ceilings or main structural members. Group multiple conduits together where possible. Conduit shall not interfere with the use of passageways, doorways, overhead cranes, monorails, equipment removal areas or working areas. In no case shall conduit routing present a safety hazard or interfere with normal plant operating and maintenance procedures. A minimum overhead clearance of 8'-0" shall be maintained in passageways.

G. Installation and support of conduits shall be from steel or concrete structures using Type 316 stainless steel Unistrut P1000 (or equivalent by other vendors) attached with Type 316 stainless steel bolts, expansion anchors and associated hardware. Furnish necessary Type 316 stainless steel conduit straps, clamps, fittings, rods and supports for the conduit in accordance with standard construction practices. Above lay-in ceilings in air conditioned rooms, EMT conduits shall be supported using hot-dip galvanized steel Unistrut P1000 (or equivalent by other vendors) with hot-dip galvanized steel hardware.

H. Identify conduits at termination points like MCC, light fixtures, control panels, receptacles, and junction boxes.

I. Not more than 3 equivalent 90 degree bends will be permitted between outlets. Provide bonded expansion fittings at building expansion joints.

J. Install conduit runs so that they are mechanically secure, mechanically protected from physical harm, electrically continuous, and neat in appearance. The interiors of conduit shall provide clean, smooth raceways through which conductors may he drawn without damage to the insulation. Make threaded connections wrench tight.

K. Cut conduit square with a power saw or a rotary type conduit cutter designed to leave a flat face. Do not use plumbing pipe cutters for cutting conduit. Ream the cut ends of conduit with a reamer, designed for the purpose to eliminate rough edges and burrs. Threads shall be cut with standard conduit dies providing 3/4 inch taper per foot, allowing the proper length so that joints and terminals may be made up tight and the ends of the conduit not deformed. Keep dies sharp and use a good quality threading oil continuously during the threading operation. Remove metal cuttings and oil from the conduit ends after the threads are cut.

L. Make up changes in direction of conduit using elbows or fittings. Do not use pull boxes to make direction changes unless specifically designated otherwise.

M. Field fabricated bends shall be free of indentations or elliptical sections. The radius of the bends shall not be less than listed in Paragraph 3.02 (this paragraph) of this specification.

N. Protect all conduit terminations from mechanical injury. Prevent the entry of moisture and foreign mater into the conduit system shall be prevented by properly capping terminations.

O. Avoid trapped runs of conduit, if possible. When they are necessary, provide drainage using a "tee" condulet equipped with a drain. Conduit is likely to pass through areas with a temperature differential of 20 degrees F or more. Seal penetrations with a proper seal fitting at the wall or barrier between such areas. For conduit passing through walls separating pressurized areas from non-pressurized areas, install sealing fittings at the wall on the non-pressurized side.

P. Fit all conduit crossing building or structure expansion joints with approved expansion fittings, except that fittings will not be required when conduit crossing an expansion joint is supported on trapeze hangers in such a way that at no time will the conduit be under stress due to expansion. Install bonding jumpers around expansion joint fittings.

Q. Where conduit terminates in sheet metal enclosures and where no threaded hubs are provided, fit the conduit with double locknuts and bushings. Sheet metal enclosures located outside or in any other wet, damp or corrosive areas shall be furnished with threaded hubs. Restrict side penetrations to the lower one third of the enclosure.

R. Provide liquid tight flexible metallic conduit where necessary to allow for movement or to localize sound or vibration, at transformers, at motors and any other rotating equipment unless shown otherwise on Contract Drawings.

S. Seal all openings or holes where conduits pass through walls or floors. When passing thru a firewall or floor, use a fire-rated seal. Certain walls, as indicated on the drawings, require environmental (air-tight) seals; seal as indicated on the Drawings.

T. Install explosion-proof seals in conduit runs crossing or entering a hazardous classified area (as shown on Contract Drawings). Install type CSBE removable sealing fittings to seal pump cables between wet well and first junction box.

U. Unless otherwise indicated on the Contract Drawings, install expansion fittings every 300 feet within a straight conduit run and where conduit crosses building expansion joints, using bonding straps to ensure ground continuity.

V. Parallel runs of conduit may be supported by structural steel racks. When two or more racks are arranged one above the other, provide vertical separation of not less than 12 inches between racks, unless otherwise indicated on the Contract Drawings. Space conduits on the racks at least enough to provide 1/4-inch clearance between hubs on adjacent conduits at terminations and to allow room for fittings.

W. Fill conduit racks no more than 75 percent of their capacity, providing usable space for future conduit. To ensure this, conduits leaving the rack horizontally shall be offset up or down so that future conduits may be installed in the space remaining. Construct conduit racks to permit access for wire or cable pulling at all pull points, even when future conduits are added to fill the racks.

X. Where conduit racks are supported on rods from beam clamps or by some other non-rigid suspension system, install rigid supports at no more than 50-foot intervals to give lateral stability to the rack.

Y. Conduit racks or hangers must in no way interfere with machinery (or its operation), piping, structural members, process equipment, or access to anticipated future equipment. Refer to architectural, structural, equipment layout and piping drawings to ensure that this requirement is met. Label high voltage conduit with the circuit phase-to-phase voltage by means of a firmly attached tag or label of approved design at each conduit termination, on each side of walls or barriers pierced and at intervals not exceeding 200 feet along the entire length of the conduit.

Z. Support conduit sizes 2 inches and larger at spacings not exceeding 10 feet and conduit sizes 1-1/2 inches and smaller at spacings not exceeding 8 feet.

AA. Support conduit runs with Type 316 stainless steel conduit clamps, hangers, straps and Type 316 stainless steel metal framing channel attached to structural steel members.

BB. Install conduits supported form building walls with at least 1/4-inch clearance from the wall to prevent the accumulation of dirt and moisture behind conduit.

CC. The minimum conduit size shall be 3/4-inch.

DD. Provide conduit tags for conduits as indicated in Specification 16195, Electrical Identification.

END OF SECTION

SECTION 16120

600-VOLT INSULATED CONDUCTORS

PART 1 GENERAL

1.01 SECTION INCLUDES

A. Specifications for 600-volt insulated wire for power and controls.

1.02 MEASUREMENT AND PAYMENT

A. No separate payment will be made for work performed under this Section.

1.03 RELATED SECTIONS

A. Section 16195 - Electrical Identification.

1.04 REFERENCES

A. American National Standards Institute/National Fire Protection Association (ANSI/NFPA), NFPA 70 - National Electrical Code (NEC), Article 310 - Conductors for General Wiring

B. Underwriter's Laboratories (UL)
   1. UL 83: Thermoplastic Insulated Wires and Cables
   2. UL 1063: Machine Tool Wires and Cables

C. American Society for Testing and Materials (ASTM)
   1. ASTM B3: Soft or Annealed Copper Wires
   2. ASTM B8: Concentric-Lay-Stranded Copper Conductors, Hard, Medium Hard, Soft

D. Insulated Cable Engineers Association (ICEA), ICEA S-61-402: Thermoplastic-Insulated Wire and Cable for the Transmission and Distribution of Electrical Energy (NEMA WC-5)

1.05 SUBMITTALS

A. Submit the following under the provisions of Section 01330 - Submittal Procedures.
   1. Manufacturer's cut sheets, catalog data
   2. Instruction for handling and storage
   3. Dimensions and weight
   4. Conformance certificate

1.06 QUALITY ASSURANCE

A. Tests. Cable shall meet all the requirements of Part 6 of ICEA S-61-402.

B. Conformance Certificate and Quality Assurance Release. Submit a conformance certificate signed by the person responsible for product quality. The certificate shall specifically identify the purchased material or equipment; such as by the project name and location, purchase order number, supplements, and item number where applicable, including materials and services provided by others. The certificate shall indicate that requirements have been met and identify any approved deviations.

1.07 DELIVERY, STORAGE, AND HANDLING

A. Ship wire and cable on manufacturer's standard reel sizes unless otherwise specified. Where cut lengths are specified, mark reel footage accordingly. Each reel shall contain one continuous length of cable. Provide impact protection by wood lagging or suitable barrier across the traverse of the reel. Provide moisture protection by using manufacturer's standard procedure or heat shrinkable self-sealing end caps applied to both ends of the cable.

PART 2 PRODUCTS

2.01 ACCEPTABLE MANUFACTURERS

A. American Insulated Wire Corporation

B. Carol Cable Company, Inc.

C. General Cable Company

D. Houston Wire and Cable

E. Okonite Company

F. Rome Cable Company

G. Triangle Wire and Cable, Inc.

2.02 600-VOLT INSULATED WIRE

A. Design. Provide insulated wire designated as XHHW-2 single conductor type and UL 83 and UL 1063 listed, rated 600 volts and certified for continuous operation at maximum conductor temperature of 90 degrees C in dry locations and 90 degrees C in wet locations while installed in underground duct, conduit or in control panels.

B. Conductors. Provide conductors which are Class B, concentric-stranded, annealed uncoated copper with physical and electrical properties complying with ASTM B3 and B8 and Part 2 of ICEA S-61-402.

C. Insulation. Each conductor shall be insulated with cross linked synthetic polymer. The insulation thickness shall match the dimensions listed in Table 310-13 of the National Electrical Code (NEC) for type XHHW-2 wire.

D. Wire Marking
   1. Wire marking shall be in accordance with National Electrical Code (NEC) Article 310-11 and shall be printed on the wire insulation at 2-foot intervals.
   2. The printing method used shall be permanent and the color shall sharply contrast with the jacket color.

E. Single conductor color coding for power conductors follows. When colored insulated conductors are not available, wrap color tape around ends of conductors.

System Voltage	A	B	C	Neutral
120/240 Volt 1Ph/3w	Black	Red		White
208/120 Volt 3Ph/4w	Black	Red	Blue	White
120/240 Volt 3Ph/4w	Black	Orange	Blue	White
480/277 Volt 3Ph/4w	Brown	Purple	Yellow	Grey
Ground		Green		

2.03 600-VOLT INSULATED MULTI-CONDUCTOR CABLE

A. Multi-conductor cable shall consist of an assembly of individual XHHW-2 insulated wires with an overall flame retardant PVC jacket over the multi-conductor assembly. The PVC jacket minimum thickness shall be 45 mils.

B. Cable Marking
   1. Wire marking shall be in accordance with National Electrical Code (NEC) Article 310-11 and shall be printed on the wire insulation at 2-foot intervals.
   2. The printing method used shall be permanent and the color shall sharply contrast with the jacket color.

2.04 POWER CONDUCTOR SIZES NO. 12 AND 10 AWG

A. Dry Locations
   1. Minimize splices
   2. Use twist type pressure connectors which screw-on conductors to splice wires. Connectors shall be factory insulated for 600 volts and rated for 105 degrees C.
   3. Use Buchanan B-CAP wire connectors or 3M Scotchlok spring connectors.

B. Wet Locations
   1. Minimize splices
   2. Splice conductors with copper (not CU/AL) crimp type compression sleeves. Cover splices with heat shrink sleeves, Raychem Type WCSM (tubing type sleeves) or Raychem Type CRSM (split sleeve with stainless steel closure spline).

2.05 POWER CONDUCTORS NO. 8 AWG AND LARGER

A. All locations
   1. Minimize splices.

2. Splice conductors with copper (not CU/AL) crimp type compression sleeves. Cover splices with heat shrink sleeves, Raychem Type WCSM (tubing type sleeves) or Raychem Type CRSM (split sleeve with stainless steel closure spine).
3. Terminate power conductors no. 8 AWG and larger with copper crimp type compression lugs. Conductors 4/0 AWG and larger shall be terminated with long barrel two-hole lugs.

2.06 CONTROL WIRES

A. Dry Locations
1. Do not splice control wires unless there is not other way to make the installation.
2. Terminate all control wires on terminal blocks in junction boxes, terminal cabinets, control cabinets and in equipment. Use insulated crimp type tin-plates copper terminals with locking fork ends (upturned leg ends) to terminate control wires on terminal blocks.

B. Wet Locations
1. Do not splice control wires unless there is no other way to make the installation.
2. Splice conductors with copper (not CU/AL) crimp type compression sleeves. Cover splices with heat shrink sleeves, Raychem Type WCSM (tubing type sleeves) or Raychem Type CRSM (split sleeve with stainless steel closure spine).

PART 3 EXECUTION

3.01 PREPARATION

A. Complete the cable raceway systems and underground duct banks before installing cables.

B. Verify sizing of raceways and pull boxes to ensure proper accommodation for the cables.

C. Check the length of the cable raceway system against the length of cable on the selected reel.

D. Clean conduits of all foreign matter before cables are pulled.

3.02 INSTALLATION

A. Wiring Methods
1. Use XHHW-2 wire for lighting, power and control wiring where conductors are enclosed in raceways like in above ground conduit systems or in underground duct banks.
2. Do not use solid conductors.
3. Use conductors not smaller than No. 12 AWG stranded for lighting circuits.

4. Use conductors not smaller than No. 14 AWG for control circuits, unless specifically directed otherwise on the Contract Drawings.
5. Splice conductors only where absolutely necessary. Splices must be minimized. Use the longest conductor lengths possible to reduce the number of splices.
6. Splices associated with taps for lighting and control circuits are allowed.
7. Make splices in accessible junction boxes.

B. Wire and Cable Identification
1. Provide wire and cable tags for control wiring ad indicated in Specification Section 16195, Electrical Identification.
2. Provide color coding tape on power wire and cables without colored insulation or jackets.

C. Single Conductors in Conduit and Duct bank
1. Install cables in accordance with the manufacturer's instructions and the National Electrical Code (NEC), Chapter 3 - Wiring Methods and Materials. Do not exceed maximum wire tension, maximum insulation pressure and minimum bending radius.
2. Pull cables into conduits using Polywater J pulling lubricant.

D. Tests
1. In general, test insulation integrity of the wiring system before terminating.
2. Make sure to disconnect sensitive electronic equipment before testing insulation.
3. Use a 500 VDC megohmmeter and perform a megger insulation test on every conductor in accordance with the operating instructions. Provide a test report for conductors size 4/0 AWG and larger. Tests for conductors size 250 kcmil and larger shall be witnessed by a City Engineer designated representative.

E. Termination
1. After the 600-volt wiring system has been tested with satisfactory results, reconnect wire.

END OF SECTION

SECTION 16123

MEDIUM VOLTAGE POWER CABLE

PART 1 GENERAL

1.01 SECTION INCLUDES

A. Specifications for medium voltage power cable.

1.02 MEASUREMENT AND PAYMENT

A. No separate payment will be made for work performed under this Section.

1.03 RELATED SECTIONS

A. Section 16195 – Electrical Identification.

1.04 REFERENCES

A. American Society for Testing and Materials (ASTM).
   1. ASTM B3: Soft or Annealed Copper Wires
   2. ASTM B8: Concentric-Lay-Stranded Copper Conductors, Hard, Medium Hard, Soft

B. Institute of Electrical and Electronics Engineers (IEEE), IEEE 383-2.5.

C. Insulated Cable Engineers Association (ICEA).
   1. ICEA P-45-482: Short-Circuit Performance of Metallic Shielding and Sheaths of Insulated Cable.
   2. ICEA S-68-516: Ethylene-Propylene-Rubber-Insulated Wire and Cable for the Transmission and Distribution of Electrical Energy (NEMA WC-8).

D. Underwriters' Laboratories (UL), UL 1072: Medium-Voltage (Type MV) Solid-Dielectric Cables

E. American National Standards Institute/National Fire Protection Association (ANSI/NFPA), 70 National Electrical Code (NEC), Chapter No. 3 - Wiring Methods and Materials.

1.05 SUBMITTALS

A. Submit the following under the provisions of Section 01330 - Submittal Procedures.
   1. Completed engineer's data sheets
   2. Completed manufacturer's data sheets
   3. Manufacturer's cut sheets, catalog data
   4. Name of electrical testing company to be employed
   5. Impulse voltage test record

6. Installation, terminating and splicing procedure
7. Instruction for handling and storage
8. Dimensions and weight
9. Conformance certificate

1.06 QUALITY ASSURANCE

A. Tests
1. Cable shall be tested at the factory to confirm that the cable complies with requirements of Parts 2, 3, 4, and 5 of ICEA S-68-516. Test methods shall comply with the requirements of Part 6 of ICEA S-68-516.
2. Where applicable, the cable shall meet the requirements of the vertical tray flame test as described in IEEE 383-2.5.

1.07 DELIVERY STORAGE AND HANDLING

A. Ship cable on manufacturer's standard reel sizes unless otherwise specified. Where cut lengths are specified, mark reel footage accordingly. Each reel shall contain one continuous length of cable.

B. Reels shall be of the type specified on the data sheets. Provide impact protection by wood lagging or suitable barrier across the traverse of the reel. Provide moisture protection by manufacturer's standard procedure or heat shrinkable self-sealing end caps applied to both ends of the cable.

PART 2 PRODUCTS

2.01 ACCEPTABLE MANUFACTURERS (IF REQUIREMENTS OF THIS SPECIFICATION ARE SATISFIED)

A. Okonite Company

B. Pirelli Cable Corporation

C. Rome Cable Corporation

D. Southwire Corporation

2.02 MATERIALS AND EQUIPMENT

E. Design. Provide cable with the following design characteristics. Cable shall be UL listed type MV-105, rated at 15 kV with 133% insulation level (220 mils). Cables will be used on three phase, 60 HZ systems operating 4.16 kV.

F. Conductors. Provide conductors which are bare, uncoated copper, class B stranded per ASTM B3, B8 and B33.

G. Conductor Shielding. Use conductor with a shield composed of extruded semi-conducting compound applied in accordance with the Part 2 of ICEA S-68-516.

H. Insulation. Conductor insulation shall be extruded ethylene propylene rubber (EPR) with a thickness of 220 mils (15 kV).

I. Insulation Shielding. Provide each insulated conductor with an extruded insulation shield consisting of a nonmetallic covering located directly over the insulation and a copper tape shield helically applied over the insulation shield. The materials used in the insulation shield and the method of construction shall comply with Part 4 of ICEA S-68-516 and UL-1072.

1. The short-circuit capacity of the conductor insulation shielding shall be the larger value of either the capacity defined in ICEA P-45-482 or that shown in the following table:

Shield Diameter Inches	Short-Circuit Amps for 8 Cycles	Short-Circuit Amps for 16 Cycles
1/2	1400	1000
3/4	2100	1500
1	2800	2000
1-1/4	3500	2500
1-1/2	4200	3000
1-3/4	5000	3500
2	5700	4000
2-1/4	6400	4500
2-1/2	7100	5000
2-3/4	7800	5500
3	8500	6000

J. Jacket. When medium voltage power cables are enclosed in conduit, duct or in other raceway systems, the cables shall be of the non-armored type with an overall nonmetallic PVC jacket covering single conductor cables as specified conforming to the requirements of Part 4 of ICEA S-68-516.

K. Splices. None will be permitted.

L. Cable Terminations. Raychem Type HVT-Z for 15 kV termination on 15 kV cable. Use non-skirted heat shrinkable stress control tubing for indoor termination.

M. Motor Lead Connection Kit. Not required.

N. Marking. Mark the jacket of cables as required by paragraphs 201, 202, 203, and 204 of UL 1072, unless otherwise specified.

O. Pulling lubricant. Polywater J.

PART 3 EXECUTION

3.01 PREPARATION

A. Complete cable raceway systems, underground duct banks, and cable support systems before installing cables.

B. Verify sizing of raceways and pullboxes to ensure proper accommodation for the cables.

C. Check the length of the cable raceway system against the length of cable on the selected reel.

D. Do not install or work on insulated or jacketed cables in temperatures below 32 degrees F.

3.02 INSTALLATION

A. Cable in Conduit and Ductbank
   1. Clean conduits of all foreign matter before cables are pulled.
   2. Install cables in accordance with the manufacturer's instructions and the National Electrical Code (NEC). Do not exceed maximum wire tension, maximum insulation pressure, and minimum bending radius.
   3. Pull cables into conduits using adequate lubrication to reduce friction. Lubricants must not be harmful to the conductor insulation.

B. Cable in Tray (Not Used)

C. Preparation for Termination
   1. Install the minimum number of splices possible.
   2. Make terminations of cables at switchgear and motors as indicated in Paragraph 2.02 of this specification.
   3. Use copper crimp-on terminal lugs and connectors for all sizes of conductors.
   4. Use crimp-on lugs with long barrel and two-hole tongues, except in places where terminations space is limited.

D. Cable Identification
   1. Attach conduit tags to medium voltage power cables in manholes and at termination points in switchgear, transformer motors, VFDs and similar location. See Specification Section 16195, Electrical Identification.

E. Fire Proofing
   1. Fireproof each set of feeder cables which enter a manhole in a conduit (A, B, and C phases) for the entire length exposed in a manhole. Use 2 layers of Scotch 77 tape with Scotch 69 glass cloth overlay wrapped in the opposite direction. Provide a minimum 50 percent overlay of each layer of Scotch 77 tape.

F. Tests
1. Before connecting the medium voltage cables, test insulation integrity.
2. Contractor shall employ an electrical testing company with minimum 10 years experience in testing industrial electrical equipment, to perform Megger and Partial Discharge tests on newly installed cables. The technician performing the tests shall have a minimum of two years experience performing the specified tests and shall be certified by the manufacturer of the test equipment.
3. Submit name and qualifications of the electrical testing company and testing technicians for review and approval by owner's representative prior to testing cables.
4. The megger test shall be the first test performed. Use a 10 kV DC megohms meter, Biddle Megger No. MIT-1020, and perform cable insulation tests in accordance with the operating instructions. The technician performing the megger test shall determine if the tested cable is satisfactory and suitable for partial discharge testing.
5. Termination
   a. After the cable has been megger tested with satisfactory results, terminate the medium voltage cable at both ends to designated terminal points.
   b. Tighten connection bolts with a torque wrench to specified torque levels.
6. The Partial Discharge test shall be the second test performed. The cable system to be tested shall be energized at the normal system voltage after all splices, terminations and connections to equipment have been made. The tests shall be made using a Hipotronics/Robinson DDX-7000 SL Digital Partial Discharge Detector. Analysis of Partial Discharge tests shall be made with DDX-DA3 software. A report shall be generated for each tested cable which includes: PD Value versus Phase, PD value versus Time Intensity, Fractal Chart and Fingerprint. The technician performing the Partial Discharge Test shall determine if the tested cable is satisfactory or the cable must be replaced.
7. Record test data for each cable test, complete with signatures of the City Engineer or designated representative who witnesses the testing. All Megger and Partial Discharge cable tests for the entire project shall be combined in three ring binders and submitted as part of the O&M manuals.

END OF SECTION

SECTION 16126

INSTRUMENTATION CABLE

PART 1 GENERAL

1.01 SECTION INCLUDES

A. Specifications for instrumentation cable.

1.02 MEASUREMENT AND PAYMENT

A. No separate payment will be made for work performed under this Section.

1.03 RELATED SECTIONS

A. Section 16195 – Electrical Identification.

1.04 REFERENCES

A. American Society for Testing and Materials (ASTM).
   1. ASTM B3: Soft or Annealed Copper Wires.
   2. ASTM B8: Concentric-Lay-Stranded Copper Conductors, Hard, Medium Hard, Soft.
   3. ASTM B33: Tinned Soft or Annealed Copper Wire for Electrical Purposes.

B. Institute of Electrical and Electronics Engineers (IEEE), IEEE 383-2.5: IEEE Standard for Type Test of Class IE Electric Cables, and Field Splices.

C. Insulated Cable Engineers Association (ICEA).
   1. ICEA S-61-402: Thermoplastic-Insulated Wire and Cable for the Transmission and Distribution of Electrical Energy (NEMA WC-5).
   2. ICEA S-66-524: Cross-Linked-Thermosetting-Polyethylene-Insulated Wire and Cable for the Transmission and Distribution of Electrical Energy (NEMA WC-7).
   3. ICEA S-68-516: Ethylene-Propylene-Rubber-Insulated Wire and Cable for the Transmission and Distribution of Electrical Energy (NEMA WC-8).

D. Underwriters' Laboratories (UL).
   1. UL 44: Rubber Insulated Wires and Cables.
   2. UL 83: Thermoplastic Insulated Wire and Cables.

E. American National Standards Institute/National Fire Protection Association (ANSI/NFPA), NFPA No. 70 - National Electrical Code (NEC), Chapter No. 3 - Wiring Methods and Materials, Article 725 - Class 1, Class 2, and Class 3 Remote Control, Signaling, and Power-Limited Circuits.

1.05 SUBMITTALS

A. Submit the following under the provisions of Section 01330 – Submittal Procedures:
   1. Completed manufacturer's data sheets, cut sheets, and catalog data.
   2. Installation, terminating and splicing procedure (including bending radius and pulling tension data).
   3. Instruction for handling and storage.
   4. Dimensions and weight.

1.06 QUALITY ASSURANCE

A. Tests
   1. Cable shall be tested at the factory to confirm that the cable complies with requirements of ICEA Section 7.7.9 of S-66-524 or 7.5.9 of S-68-516.
   2. Where applicable, the cable shall meet the requirements of the vertical tray flame test as described in IEEE 383-2.5.

1.07 DELIVERY, STORAGE AND HANDLING

A. Ship cable on manufacturer's standard reel sizes unless otherwise specified. Where cut lengths are specified, mark reel footage accordingly. Each reel shall contain one continuous length of cable. Provide impact protection by wood lagging or suitable barrier across the traverse of the reel. Provide moisture protection by manufacturer's standard procedure or heat shrinkable self-sealing end caps applied to both ends of the cable.

PART 2 PRODUCTS

2.01 MANUFACTURERS

A. Alpha Wire Corporation

B. Belden Division, Cooper Industries, Inc.

C. Cablec Continental Cables Company

D. General Cable Company

E. Houston Wire and Cable

F. Manhattan Electric Cable Corporation

G. Okonite Company

H. Southwire Corporation

2.02 MATERIALS AND EQUIPMENT

A. Design. Provide cable with the following design characteristics. The cable shall consist of multiple conductors. The cable assembly shall be UL listed, flame, oil and sunlight resistant, and certified for continuous operation in wet or dry locations while installed in underground duct or conduit. Each conductor shall be individually insulated. Pairs and triads shall have conductors which are twisted together with a drain wire, shielded, and covered with a jacket. Multi-pair/triad cables shall consist of the required number of electrically isolated, shielded pairs or triads, which are bundled together and covered by a PVC overall jacket.

B. Conductors. Provide conductors which are Class B, concentric stranded, annealed tinned copper whose physical and electrical properties comply with ASTM B3, B8 or B33.

C. Insulation. Each conductor shall have 600-volt PVC insulation. The minimum insulation thickness shall not be less than 15 mils of PVC with a 4 mil nylon jacket with an overall 90 degree C rating.

D. Drain Wire. Provide drain wire which is Class B, seven-stranded, tin-coated copper in accordance with ASTM B3, B8, or B33. The drain wire shall not be less than two AWG sizes smaller than the insulated conductor's size, except for multiple pair triad drain wires, which shall not be less than the insulated conductor size.

E. Shielding. Provide shielding consisting of laminated, nonburning, mylar-backed aluminum tape applied helically around a twisted pair or triad with the aluminum side in continuous contact with the drain wire. Wrap the tape around each twisted pair or triad with a 25 percent minimum overlap.

F. Jacket. The pair or triad outer jacket shall be a minimum of 45 mils of PVC.

G. Conductor Identification. Use individual conductors in single-pair and single-triad cables which are color coded black and white; and black, white and red, respectively. Multi-pair triad cables shall have one conductor in each pair or triad colored white, and all other conductors shall be color coded in sequence.

H. Cable Marking. Print cable marking information on the jacket of each cable at 2-foot intervals. Use a permanent printing method with color sharply contrasting the jacket color.

2.03 TERMINATIONS

A. Terminate instrument cables on terminal blocks in junction boxes, terminal cabinets control cabinets and in equipment. Use insulated crimp type tin-plated copper terminals with locking fork ends (upturned leg ends) to terminate instrument cables on terminal blocks.

B. Instrument cables shall not be spliced in underground pull boxes.

2.04 CABLE IDENTIFICATION

A. Provide cable tags for instrument cables as indicated in Specification Section 16195, Electrical Identification.

PART 3 EXECUTION

3.01 PREPARATION

A. Complete cable raceway systems, underground duct banks and cable support systems before installing cables.

B. Verify sizing of raceways and pullboxes to ensure proper accommodation for the cables.

C. Check the length of the cable raceway system against the length of cable on the selected reel.

D. Do not install or work on PVC insulated or jacketed cables in temperatures below 32 degrees F.

E. Clean conduits of foreign matter before cables are pulled.

F. Provide at least 25 percent spare pairs or triads.

3.02 INSTALLATION

A. Cable in Conduit and Duct bank
   1. Install cables in accordance with the manufacturer's instructions and NEC Article
      725 - Class 1, Class 2, and Class 3 Remote Control, Signaling and Power Limited Circuits. Do not exceed maximum wire tension, maximum insulation pressure and minimum bending radius.
   2. Pull cables into conduits using Polywater J lubricant to reduce friction. Lubricants must not be harmful to the conductor insulation or cable jacket.

B. Cable in Tray. (Not Used)

C. Termination
   1. Do not splice conductors. Use insulated crimp type tin-plated copper terminals with locking fork ends (upturned leg ends) to terminate cables to terminal blocks.
   2. For shielded control cable, terminate the shield and ground at one end only, preferably at the control panel end for instrument and communication cable and at the supply end for electronic power cables.
   3. Mark wiring on both ends with circuit numbers or loop tag numbers. Heat shrink wire tags after wire terminals have been installed.

D. Tests
   1. Before connecting the cables, test insulation integrity and conductor continuity.
   2. Use a 500 VDC megohms meter and perform the cable insulation test in accordance with the operating instructions.

E. Termination. After the 600-volt instrument cable has been tested with satisfactory results, the cable shall be terminated at both ends to the designated terminal points.

END OF SECTION

SECTION 16131

DEVICE, PULL, JUNCTION AND TERMINAL BOXES

PART 1 GENERAL

1.01 SECTION INCLUDES

A. Specifications for device, pull, and junction boxes.

1.02 MEASUREMENT AND PAYMENT

A. No separate payment will be made for work performed under this Section.

1.03 RELATED SECTIONS

A. Specification 16195, Electrical Identification.

1.04 REFERENCES

A. American National Standards Institute/National Electrical Manufacturers Association (ANSI/NEMA).
   1. FB1 - Fittings and Support for Conduits and Cable Assemblies
   2. 250 - Enclosures for Electrical Equipment (1000 volts maximum)

B. American National Standards Institute/National Fire Protection Association (ANSI/NFPA), NFPA70 - National Electrical Code (NEC) - Article 370 - Outlet Device, Pull and Junction Boxes, Conduit Bodies and Fittings.

C. Underwriters Laboratories (UL):
   1. 50 - Safety Cabinets and Boxes
   2. 508 - Safety Industrial Control Equipment
   3. 514B - Safety Fittings for Conduit and Outlet Boxes
   4. 886 - Safety Outlet Boxes and Fittings for Use in Hazardous Areas

1.05 SUBMITTALS

A. Submit the following under provisions of Section 01330 – Submittal Procedures:
   1. Manufacturer's cut sheets, catalog data
   2. Instruction for handling and storage
   3. Installation instructions
   4. Dimensions and weights

1.06 DELIVERY, STORAGE AND HANDLING

A. Pack and crate boxes to permit ease of handling and to provide protection from damage during shipping, handling and storage.

PART 2 PRODUCTS

2.01 ACCEPTABLE MANUFACTURERS

A. Stainless Steel Boxes
   1. Hoffman Industrial Products
   2. Pauluhn Electric Manufacturing Company
   3. Hennessy
   4. Tanco
   5. Tejas
   6. Circle A.W.

B. Cast Device Boxes
   1. Appleton Electric Company
   2. Crouse-Hinds, Division of Cooper Industries
   3. Killark Electric Manufacturing Company

2.02 MATERIALS AND EQUIPMENT

A. Pull, Junction and Terminal Boxes
   1. Provide UL-approved junction boxes and pull boxes manufactured from Type 316 stainless steel sheet metal and meeting requirements of NEMA 4X for corrosive and wet area, NEMA 250 and NEC Article 370.
   2. Provide boxes with a Type 316 stainless steel continuous hinge, closure hasps and all- stainless steel hardware.
   3. Furnish the door with neoprene gasket and provision for padlock.

B. Device Boxes
   1. Provide UL-approved boxes designed and manufactured to house electrical devices like receptacles and switches, and in conformance with NEMA FB1 and NEC Article 370.
   2. Supply boxes that are cast aluminum or 316 stainless steel, suitable for corrosive and wet atmosphere.

C. Hardware for all Boxes
   1. Mounting Hardware: Type 316 Stainless steel
   2. Conduit Connectors: Watertight as manufactured by Myers Hubs, or equal.

PART 3 PART 3: EXECUTION

3.01 PREPARATION

A. Review the Contract Drawings and provide the proper type boxes.

3.02 INSTALLATION

A. Boxes described in this specification shall be used both in dry and wet, corrosive areas, both inside and outside locations.

B. Install boxes in accordance with NEC Article 370 in locations indicated on the Contract Drawings.

C. Install junction and pull boxes in readily accessible places to facilitate wire pulls, maintenance and repair.

D. Plug unused conduit openings.

E. Make conduit connections to sheet metal boxes with watertight conduit connectors.

END OF SECTION

SECTION 16140

WIRING DEVICES

PART 1 GENERAL

1.01 SECTION INCLUDES

A. Specifications for wiring devices including:
   1. Receptacles
   2. Wall switches.
   3. Wall plates and cover plates.

1.02 MEASUREMENT AND PAYMENT

A. No separate payment will be made for work performed under this Section.

1.03 RELATED SECTIONS

A. Specification 16195, Electrical Identification.

1.04 REFERENCES

A. American National Standards Institute/National Electrical Manufacturers Association (ANSI/NEMA):
   1. NEMA WD1 - General Purpose Wiring Devices.
   2. NEMA WD6 - Dimensional Requirements.

B. Federal Specifications (WC-596F).

C. American National Standards Institute/National Fire Protection Association (NFPA):
   1. NFPA No. 70 - National Electrical Code (NEC), Articles 210 Branch Circuits, 250 Grounding and 410, Paragraphs 56, 57 and 58.

1.05 SUBMITTALS

A. Submit the following under provisions of Section 01330 - Submittal Procedures:
   1. Product Data: Manufacturer's product literature and specifications including dimensions, weights, certifications and instructions for handling, storage and installation.

1.06 DELIVERY, STORAGE AND HANDLING

A. Pack and crate devices to permit ease of handling and protect from damage during shipping, handling and storage.

PART 2 PRODUCTS

1.07 ACCEPTABLE MANUFACTURERS

A. Hubbel Inc. Wiring Devices Division

B. Pass & Seymour/Legrand.

C. TayMac Corporation

1.08 MATERIALS AND EQUIPMENT

A. Standards: Conform to NEMA WD1 for general requirements and NEMA WD6 for dimensional requirements.

B. Manufacture devices to heavy-duty industrial specification grade with brown nylon bodies back and side wiring provisions and green-colored grounding screws.

C. Receptacles:
   1. Duplex-type receptacles: Rated 20 amps at 120 volts.
   2. Contacts: Brass or phosphor bronze.
   3. Receptacle grounding system: Extend to the mounting strap unless isolated ground is indicated or required.
   4. GFI or GFCI (ground fault circuit interrupter) receptacles: Provide feed-through type with test and reset button.

D. Wall Switches:
   1. Toggle switches: Rated 20 amps at 120/277 volts AC rated for both resistive and inductive loads.
   2. Contacts: Silver cadmium oxide construction to prevent sticking, welding and excessive pitting.

E. Cover Plates:
   1. In outdoor, corrosive and wet areas, provide cover plates of cast metal, gasketed with spring-loaded hinged covers and stainless steel hardware.
   2. In indoor industrial areas, provide cast aluminum cover plates.
   3. In indoor finished areas, provide Type 302 stainless steel cover plates.

PART 3 EXECUTION

3.01 PREPARATION

A. Verify that device boxes are correctly placed.

B. Verify that the correct quantity, size and type of wires are pulled to each device box.

C. Verify that wiring has been checked at both ends.

D. Prepare wire ends for connection to devices.

E. Inspect each wiring device for defects.

3.02 INSTALLATION

A. Install products in accordance with manufacturer's instructions.

B. Install devices plumb and level.

C. Install switches with OFF position down.

D. Install receptacles with grounding pole on top.

E. Connect wiring device grounding terminal to outlet box with bonding jumper.

F. Connect wiring devices by wrapping conductors clockwise around screw terminals.

G. Install cover plates on switch, receptacle and blank outlets in finished areas.

H. Energize and test devices for proper operation.

END OF SECTION

SECTION 16161

PANELBOARDS

PART 1 GENERAL

1.01 SECTION INCLUDES

A. Specifications for panelboards.

1.02 MEASUREMENT AND PAYMENT

A. No separate payment will be made for work performed under this Section.

1.03 RELATED SECTIONS

A. Specification 16195, Electrical Identification.

1.04 REFERENCES

A. American National Standards Institute/National Electrical Manufacturers Association (ANSI/NEMA)
   1. NEMA AB1: Molded Case Circuit Breakers
   2. NEMA PB1: Panelboards
   3. NEMA PB1.1: Instruction for Safe Installation Operation and Maintenance of Panelboards rated 600 volts or less.
   4. NEMA PB1.2: Application Guide for Ground-fault Protective Devices for Equipment

B. Federal Specifications, FS W-C-375A: Circuit Breakers, Molded Case, Branch Circuit and Service.

C. American National Standards Institute/National Fire Protection Association (ANSI/NFPA), NFPA No. 70 - National Electrical Code (NEC), Article 384 - Switchboards and Panelboards.

1.05 SUBMITTALS

A. Submit the following under provisions of Section 01330 – Submittal Procedures:
   1. Manufacturer's cut sheets and catalog data
   2. Breaker arrangement
   3. Breaker characteristic curves
   4. Instruction for handling and storage
   5. Installation instructions
   6. Dimensions and weights

1.06 DELIVERY, STORAGE AND HANDLING

A. Have panelboards packed and crated to permit ease of handling and to provide protection from damage during shipping, handling and storage.

PART 2 PRODUCTS

2.01 ACCEPTABLE MANUFACTURERS

A. Eaton

B. Square D Company

2.02 MATERIALS AND EQUIPMENT

A. Basic Requirements
   1. Use panelboards manufactured and tested in accordance with NEMA PB 1.
   2. Provide circuit breakers of industrial grade, manufactured and tested in accordance with NEMA AB 1 and Federal Specification FS W-C-375.
   3. Do not exceed 42 available single pole branch circuits in any one panelboard.

B. Rating
   1. Voltage rating, current rating, number of phases, number of wires and number of poles are indicated on Contract Drawings.
   2. Branch circuit breaker interrupting capacity shall be minimum 10,000 ampere RMS symmetrical for 208V, and 240V; 25,000 ampere RMS symmetrical for 277V and 480V.

C. Circuit Breakers: Molded case, bolt-on thermal magnetic type with number of poles and trip ratings as shown on the Contract Drawings. Provide ground fault interrupters with trip rating where shown on the Contract Drawings.

D. Bus System
   1. Bus Bars: 98 percent conductivity copper. Provide a solid neutral bar in 4-wire panelboards. Include ground bus in all panels. Provide split-bus panels where shown on Contract Drawings.
   2. Main: Circuit breaker or main lugs only as indicated on the Contract Drawings or as required to meet the current interrupting ratings.

E. Box and Trim
   1. Construction: Code grade steel, ample gutter space, flush door, flush snap latch and lock.
   2. Trim: Surface or flush as required. Enclose panelboards located outdoors, or in other wet and corrosive areas in NEMA 4X weatherproof Type 316 stainless steel enclosures. Enclose indoor panelboards in a NEMA 1 enclosure with manufacturer's standard gray enamel finish.
   3. Directory: Typed card, with glass cover in frame on back of door giving the circuit numbers and the area or equipment served.

F. Conduit Connectors: Watertight as manufactured by Myers Hubs, or equal.

PART 3 EXECUTION

3.01 PREPARATION

A. Review Drawings to verify that panelboards are correct for the application.

3.02 INSTALLATION

A. Install the panelboard in accordance with NEMA PB 1.1 and NEC Article 384.

B. Mount panelboards 6'-0" (to top of cabinet) above finished floor or grade.

C. In wet and corrosive areas, including outdoor locations, install panel enclosures on spacers to provide approximately 1/4-inch between back of cabinet and mounting surface.

D. In wet and corrosive areas, including outdoor locations, connect conduit to the bottom of enclosure and to the lower 30 percent of the sides using watertight connectors.

END OF SECTION

SECTION 16170

GROUNDING AND BONDING

PART 1 GENERAL

1.01 SECTION INCLUDES

A. Grounding electrodes and conductors

B. Equipment grounding conductors

C. Bonding

D. Power system grounding

E. Communication system grounding

F. Electrical equipment and raceway grounding and bonding

G. Control equipment grounding

1.02 MEASUREMENT AND PAYMENT

A. No separate payment will be made for work performed under this Section.

1.03 RELATED SECTIONS

A. Specification 16195, Electrical Identification.

1.04 REFERENCES

A. American Society for Testing and Materials (ASTM)
   1. ASTM B3: Soft or Annealed Copper Wires
   2. ASTM B8: Concentric-Lay-Stranded Copper Conductors, Hard, Medium Hard, Soft
   3. ASTM B33: Tinned Soft or Annealed Copper Wire for Electrical Purposes

B. Institute of Electrical and Electronics Engineers (IEEE)
   1. IEEE 142-82: Recommended Practice for Grounding of Industrial and Commercial Power Systems
   2. IEEE 383-2.5: IEEE Standard for Type Test of Class IE Electric Cables, Field Splices, and Connections for Nuclear Power Generating Stations.

C. Underwriters' Laboratories (UL)
   1. UL 83: Thermoplastic Insulated Wire and Cables
   2. UL 467: Grounding and Bonding Equipment

D. National Fire Protection Association (NFPA), NFPA No. 70 - National Electrical Code (NEC), Article No. 250 - Grounding.

1.05 SUBMITTALS

A. Submit the following under the provisions of Section 01330 – Submittal Procedures:
   1. Manufacturer's cut sheets and catalog data
   2. Installation, terminating and splicing procedure
   3. Instruction for handling and storage
   4. Dimensions and weight

1.06 QUALITY ASSURANCE

A. Tests
   1. Use insulated cable conforming to requirements of the vertical tray flame test as described in IEEE 383-2.5.
   2. Test grounding system in the field in accordance with procedures outlined in Part 3 - Execution.

1.07 DELIVERY, STORAGE AND HANDLING

A. Ship grounding cable on manufacturer's standard reel sizes unless otherwise specified. Where cut lengths are specified, mark reel footage accordingly. Each reel shall contain one continuous length of cable.

B. Provide impact protection by wood lagging or suitable barrier across the traverse of the reel. Pack and crate other materials specified to withstand normal abuse during shipping, handling and storage.

PART 2 PRODUCTS

2.01 ACCEPTABLE MANUFACTURERS

A. Cable
   1. American Insulated Wire Company
   2. Cablec Continental Cables Company
   3. General Cable Company
   4. Okonite Company
   5. Pirelli Cable Corporation
   6. Rome Cable Corporation
   7. Triangle Wire and Cable, Inc.
   8. Southwire Corp

B. Ground Rods and Connectors:
   1. Blackburn
   2. Copperweld
   3. Thomas & Betts

C. Exothermic Connections:
   1. Burndy Corporation (Therm-O-Weld)
   2. Erico Products (Cadweld)

D. Grounding Connectors:
   1. Burndy Corporation
   2. O.Z. Gedney
   3. Thomas & Betts

2.02 MATERIALS AND EQUIPMENT

A. Design. Provide grounding cable and materials with the following characteristics:
   1. Use a grounding system designed in accordance with NEC Article No. 250 Grounding, and the IEEE 142-82 - Recommended Practice for Grounding of Industrial and Commercial Power Systems.

B. Materials
   2. Use grounding conductors, bare or insulated, which are manufactured and tested in accordance with applicable standards ASTM B3, ASTM B8 and ASTM B33.
   3. Provide a main ground system of No. 4/0 AWG, Class C stranded, bare copper cable. Generally, taps shall be sized as follows:

a.	Main ground loop or grid	#4/0 minimum
b.	Switchgear, motor control	
c.	Centers and power transformers	#4/0
d.	Motors 200 hp and above	#4/0
e.	Power panels - AC and DC	#2/0
f.	Control panels and consoles	#2
g.	Building columns	#4/0
h.	Fencing posts	#2/0

C. Where single conductor insulated grounding conductors are called for, use 600 volt insulation. Use ground conductors identified with green insulation or green tape marking.

D. Supply identifying ribbon which is PVC tape, 3 inches wide, red color, permanently imprinted with "CAUTION BURIED ELECTRIC LINE BELOW" in black letters as specified in Section 16195, Electrical Identification.

E. Utilize flexible copper braid across hinged chain link or fence gates to bond the movable portion to the grounded fence post.

PART 3 EXECUTION

3.01 REPARATION

A. Complete site preparation and soil compaction before trenching and driving ground rods for the underground grid.

B. Verify from Contract Drawings the exact location of stub-up points for grounding of equipment, fences and building or steel structures.

3.02 CONSTRUCTION CRITERIA

A. Local pushbutton and selector switch stations, two-wire control devices, disconnect switches, lighting transformers, panelboards, operator panels, benchboards, and the enclosures of other electrical apparatus shall be grounded through an equipment grounding conductor run with the power supply or control circuit conductors or shall be grounded as shown on the Contract Drawings.

B. Ground all three phase motors, in addition to the grounding conductors in the motor feeder, with a separate No. 4/0 AWG cable to motor frame.

C. Motors having power supplied by multiconductor cable shall be grounded by a separate grounding conductor in the cable and where supplied by single conductor cable in conduit by a grounding conductor pulled in the conduit. Connect ground conductors to the ground bus in the motor control center and to the ground terminal provided in the motor conduit box.

D. Do not ground the insulated bearing pedestals of large motors.

E. Connect ladder-type cable trays to the grounding electrode system. Use 4/0 AWG grounding conductor in power cable tray and #2 AWG in instrument and control cable trays. Provide NEC and U.L.-approved ground clamps.

F. All conduits must contain an equipment grounding conductor of at least one #12 AWG.

3.03 INSTALLATION

A. Equipment Grounding
   1. Make grounding connections to surfaces which are dry and cleaned of paint, rust, oxides, scales, grease and dirt to ensure good conductivity. Clean copper and galvanized steel to remove oxide before making welds or connections.
   2. Use the exothermic welding process for below-grade grounding connections, except at ground rods. Use mechanical connectors or thermal connections for above-grade grounding connections as shown on the Contract Drawings.
   3. Make grounding connections to electrical equipment, vessels, mechanical equipment and ground rods in accordance with the Contract Drawings.
   4. Ground tanks and vessels by making connections to integral structural supports or to existing grounding lugs or pads, and not to the body of the tank or vessel.
   5. Leave ground connections to equipment visible for inspection. Protect this type connection with PVC non-metallic conduit.
   6. Make connections to motor frames and ground buses with lugs attached to the equipment by means of bolts. Do not use motor anchor bolts or equipment housing for fastening lugs of grounding cable.

7. Where the wiring for lighting systems consists of single conductor cables in conduit, provide each conduit with an equipment grounding conductor. Use a grounding conductor with green colored insulation and ground equipment in the lighting system.

B. Raceway and Support Systems Grounding
1. Install raceway, cable rack or tray and conduit so that it is bonded together and permanently grounded to the equipment ground bus, according to the Contract Drawings. Connection to conduit may be grounding bushing or ground clamp.
2. Install raceway at low voltage motor control centers or other low voltage control equipment so that it is bonded and grounded, except that any conduit which is effectively grounded to the sheet metal enclosure by bonding bushing or hubs need not be otherwise bonded.
3. Where a grounding conductor is run in or on a cable tray, bond the grounding conductor to each section of cable tray with a cable tray ground clamp.
4. Where only grounding conductor is installed in a metal conduit, bond both ends of the conduit to the grounding conductor.
5. Provide flexible "jumpers" around raceway expansion joints. Use copper bonding straps for steel conduit. Install jumpers across cable tray joints which have been parted to allow for expansion and any hinged cable tray connections.

C. Fences and Gates. (Not Used)

D. Power System Grounding
1. Solidly ground the secondary neutral of transformers to the ground grid. See Contract Drawings for details.
2. Solidly ground the neutral of lighting, instrument and control transformers.

E. Cable Armor and Shields
1. For shielded control cable, terminate and ground the shield at one end only, preferably at the control panel end for instrument and communication cable and at the supply end for electronic power cables. Maintain shield continuity by jumpering the ground shield across connection point where it is broken at junction boxes, or other splice points. Insulate these points from ground.
2. Connect the ground wire in power cable assemblies at each terminal point to a ground bus, if available, or to the equipment enclosure. Do not carry these ground wires through a "doughnut" current transformer (CT) used for ground fault relaying; do carry ground leads from stress cones through CTs. Ground power cable armor and shield at each terminal point.

F. Test
1. Perform ground resistance tests after underground installation and connections to building steel are complete, unless otherwise noted on applicable Contract Drawings.
2. Make tests at each ground test well using a "fall of potential" test method. Each ground test well shall not exceed a maximum resistance of 5 ohms. Where measured values exceed this figure, install additional ground rods as required to reduce the resistance to the specified limit.

G. Inspection. Inspection of the grounding system by the City Engineer and the local Code Inspector must take place before the grid trenches are backfilled.

END OF SECTION

SECTION 16195

ELECTRICAL IDENTIFICATION

PART 1 GENERAL

1.01 SECTION INCLUDES

A. Specification for electrical identification including:
   1. Nameplates and labels
   2. Wire and cable markers
   3. Conduit markers
   4. Cable tray markers
   5. Underground warning tape
   6. Warning labels

1.02 MEASUREMENT AND PAYMENT

A. No separate payment will be made for work performed under this Section.

1.03 REFERENCES

A. American National Standards Institute/National Fire Protection Association (ANSI/NFPA)
   1. No. 70 - National Electrical Code (NEC)
      a. Article 110 - Requirements for Electrical Installation
      b. Article 430 - Transformers and Transformer Vaults

B. City of Houston Building Code.

C. Other applicable Codes and Standards as referenced in other Sections.

D. Underwriters Laboratories. U.L. Standards No. 224 - Extruded Insulated Tubing

1.04 SUBMITTALS

A. Submit the following under the provisions of Section 01330 – Procedures:
   1. Manufacturer's cut sheets and catalog data
   2. Description of materials used
   3. Label or nameplate dimensions
   4. Engraving or imprint legends
   5. Instruction for handling and storage
   6. Installation instructions

1.05 DELIVERY, STORAGE AND HANDLING

A. Pack materials to permit ease of handling and to provide protection from damage during shipping, handling and storage.

PART 2 PRODUCTS

2.01 ACCEPTABLE MANUFACTURERS

A. Almetek Industries Incorporated

B. Brady U.S.A. Incorporated

C. Ideal Electric Company

D. Raychem Corporation

E. 3M Electrical Products Division

F. Thomas & Betts

G. Tyton Corporation

2.02 MATERIALS AND EQUIPMENT

A. Nameplates and Labels
   1. Provide an identification nameplate for each item of electrical equipment engraved with the equipment name. Use the description shown on the Contract Drawings.
   2. For nameplates, use 3-ply phenolic material engraved to show black lettering on a white background. Size the nameplates approximately 1 inch wide and 3 inches long for 3 lines of 3/16 inch - 16 letters with a 0.8 condensed factor. Attach nameplates with stainless steel screws.
   3. Generally, provide large pieces of equipment with engraved nameplates; provide additional nameplates at pushbuttons and other local devices. Provide identification for all other electrical equipment, device or enclosure not furnished with readily noticeable tag, nameplates or other means of identification.
   4. Install nameplates on the front cover of transformers stating the transformer service location number or identification number, the panelboard or device served, and main breaker feeding the transformer (MCC No.), and the drawing number on which the transformer schematic is shown.
   5. Furnish equipment, such as motor starters, safety switches, welding receptacles and circuit breakers, with 1" x 3" plastic nameplates stating description of item served.
   6. Provide nameplates for motors giving the driven equipment description, and MCC the number. Nameplates shall be mounted adjacent to motors.
   7. Install nameplates on the outside and inside of doors to circuit breaker panelboards (i.e., lighting, instrument or receptacle panels). State the panelboard name, the drawing number on which the panelboard schedule shows, and the main breaker feeding the panel (MCC No. or Power Panel name).
   8. Type panelboard directories and insert them inside panelboard doors.

9. Place a large nameplate approximately 3"x5" on control panels, relay panels, junction boxes and similar enclosures with electrical devices mounted inside. The large nameplates shall identify the enclosure.
10. Provide a nameplate on MCC motor starter doors duplicating motor nameplate data.
11. Provide warning label on front and inside actuator controllers in accordance with NEC. Identify controller as having two (2) sources of electric power if such is the case.

B. Wire and Cable for Control Wiring
1. Use pre-printed tubular heat-shrink type wire and cable tags. Place a tag at each end of each wire and cable for all control wiring.
2. Select tags manufactured so that the heat-shrink process makes the imprint permanent and solvent-resistant.
3. Use tags that are self-extinguishing, conforming to U.L. Standard No. 224 for print performance, heat shock and flammability.
4. Provide tag material that is flexible, radiation cross-linked polyolefin with 3 to 1 shrink ratio, rated 600 volts, and white in color.
5. Cable in cable tray shall be marked at each end and at every cable tray drop out to a motor, control panel, or switchgear.

C. Conduit Tags
1. Provide conduit tags made of stainless steel, approximately 2 inches x 1 inch x 19 gage.
2. Stamp the conduit number or conduit identification on the tag.
3. Punch tags for tie fasteners. Fasten tags to the conduits with stainless steel braided wire.

D. Underground Warning Tape
1. Provide detectable warning tape made of 4 mil thick polyolefin film, 3 inches wide, suitable for direct burial and resistant to alkalis, acids and other common soil substances.
2. Use red tape with black legend printed in permanent ink.

E. Warning Labels
1. Place OSHA safety labels on enclosures and boxes 100 cubic inches or more containing electrical equipment or terminations.
2. Provide OSHA color codes for the labels. Use labels made from 4 mil vinyl with pressure sensitive adhesive backing.
3. The warning label caption is DANGER - 480 VOLTS for 480 volt systems. For voltages higher than 600 volts, provide warning labels with “DANGER - HIGH VOLTAGE - KEEP OUT”.
4. Labels shall be 5 inches x 3-1/2 inches for small equipment and 10 inches x 7 inches for large equipment and electrical room doors.

PART 3 EXECUTION

3.01 PREPARATION

A. Degrease and clean surfaces where adhesive labels will be applied.

B. Drill holes for nameplates to be fastened with stainless screws.

C. Prepare the cable ends for termination and conductor markings.

D. Identify conduits at terminating points and select conduit tag marking as indicated on the Contract Drawings.

3.02 INSTALLATION

A. Install nameplates and labels in accordance with the manufacturer's instructions and the Contract Drawings.

B. Apply wire and cable tags in accordance with manufacturer's instructions using a heat gun with properly sized nozzle for the application. Tag the wires and cables at both ends.

C. Tag conduits at junction boxes, pull boxes control panels, transformers, switchgear and similar location and at other termination points.

D. Identify cable trays at the time of installation with the alphanumeric number shown on the Contract Drawings. Label cable trays on the outside rail.

E. Place the tray identifier at each point where the tray designation changes and at 200 foot intervals in between, but not less than two per run.

F. Identify underground conduits, cables or duct banks using the underground delectable warning tape. The underground grounding grid, including laterals, shall be identified with underground delectable warning tape. Install one tape per trench at 12 inches below grade or as indicated on the Contract Drawings. For wide trenches or duct banks, install one warning tape per 18-inch width.

G. Apply the 5 inch by 3-1/2 inches warning labels to disconnect switches, panelboards, terminal boxes, and similar devices in accordance with manufacturer's instruction and the Contract Drawings. Apply the 10 inch x 7 inch warning labels to larger control panel enclosures, motor control centers and to entrance doors to rooms containing electrical power and control equipment.

END OF SECTION

SECTION 16210

STANDBY DIESEL ENGINE GENERATOR

PART 1 GENERAL

1.01 SCOPE OF WORK

A. Furnish all labor, materials, equipment and incidentals to install a standby diesel engine generator with double wall sub-base fuel tank in an outdoor weatherproof enclosure. Include a resistive load bank with controls.

B. Standby Diesel Engine Generator Supplier is responsible for furnishing the Generator Outdoor Weatherproof Enclosure per Section 16211 including all labor, materials and any incidentals required for successful installation and operation of the generator.

1.02 MEASUREMENT AND PAYMENT

A. No separate payment will be made for work performed under this Section.

1.03 RELATED SECTIONS

A. Section 01330 - Submittal Procedures

B. Section 01782 - Operations and Maintenance Data

C. Section 16195 – Electrical Identification

D. Section 16211 – Generator Outdoor Weatherproof Enclosure

E. Section 16213 – Diesel Fuel Management System

F. Section 16220 – Automatic Transfer Switches with Bypass

1.04 REFERENCE STANDARDS FOR STANDBY GENERATORS

A. ANSI/NEMA MG 1 - Motors and Generators.

B. NFPA 70 – National Electrical Code.

C. NFPA 110 – Standard for Emergency and Standby Power Systems.

D. UL 1236 – Battery Chargers for Charging Engine-Starter Batteries

1.05 REFERENCE STANDARDS FOR ABOVE GROUND FUEL TANKS

A. NFPA 70 – National Electrical Code.

B. UL 142 – Above Ground Steel Tanks for Flammable and Combustible Liquids.

1.06 SUBMITTALS

A. The submittal shall include Standby Diesel Engine Generator, Generator Outdoor Weatherproof Enclosure, Diesel Fuel Management System and other peripherals required for a complete system. Incomplete submittals or separate submittals for each of these components are not acceptable and will be returned without review.

B. Submit the following under the provisions of Section 01330 – Submittal Procedures:
   1. Materials of constructions
   2. Performance data, including fuel consumption and emissions, at 100%, 75%, 50%, and 25% load
   3. Muffler attenuation curve
   4. Installation instructions
   5. Maintenance and operation manuals

C. Submit shop drawings including:
   1. System schematics (power and controls)
   2. Dimensioned Outline drawings
   3. External connection locations and requirements
   4. Wiring diagrams, three-line diagram
   5. Fabrication/Erection/Installation drawings
   6. Insulation requirements
   7. Structural support drawings including rigging requirements, foundation and structural support requirements, operating and rigging weights, support point loading data.

D. Submit certified copies of performance tests of a diesel engine generator set, identical to the one specified herein. An independent testing laboratory shall certify the test procedures. The tests shall include:
   1. Torsiograph analysis per MIL-STD-705, Method 504.2, single step load pick-up per NFPA 99, Section 8.2.3.
   2. Harmonic analysis and voltage waveform description per MIL-STD-705, Method 601.4.
   3. Generator temperature rise per NEMA MG 1.
   4. Maximum motor starting capability per NEMA MG 1.
   5. Structural soundness per NEMA MG 1.
   6. Fuel consumption per NEMA MG 1.
   7. Transient response and steady state governing per NEMA MG 1.
   8. Three phase short-circuit test for mechanical and electrical strength per NEMA MG 1.
   9. Voltage and frequency regulation from no load to full load per NEMA MG1.
   10. Rotor static balance.
   11. Winding resistance and field resistance.
   12. Rotor dynamic balance. Balance to not more than 2.0 mils or 0.25 mil per pole peak to peak, whichever is less, measured on all bearings.
   13. Heat run at rated full load.
   14. Readout of all RTDs under stabilized heat-run conditions.
   15. High potential test.

16. Efficiency by summation of losses.
17. Voltage and current phase balance.
18. Transient and sub-transient reactances.

E. Provide: Ten (10) copies of Operation and Maintenance manuals, in accordance with Section 01782, in 3-ring binders with the following:
1. Recommended spare parts list
2. Factory test reports
3. Drawings
4. As-built schematics
5. As-built wiring diagrams
6. Components data sheets
7. Maintenance recommendations

1.07 PERFORMANCE REQUIREMENTS

A. Each diesel engine generator set shall be designed for the following performance:
1. Diesel Engine Generator Set Duty. Standby. Unit shall operate at up to 100% of rating for no more than 400 hours per year during the interruption of normal power and for periodic testing.
2. Maximum Specific Fuel Consumption at 100% Load.
3. Nominal Engine Speed. 1800 RPM.
4. Engine Generator Connection. Direct.
5. Combustion Cycle. 4-stroke.
6. Jacket Water Cooling. Radiator.
7. After-cooler Cooling. Radiator.
8. Fuel Cooler. Engine Mounted.
9. Design Maximum Outside Air Temperature. 110°F.
10. Design Minimum Outside Air Temperature. 0°F.

B. Each generator shall be designed for the following performance:
1. Ratings:
   a. KW Size. As indicated on the Drawings.
   b. Type. Brushless, synchronous, 0.8 power factor, four-pole, revolving field, 2/3-pitch factor.
   c. Voltage. 480 volts, three-phase, four wires. Neutral solidly-grounded.
   d. Frequency. 60 hertz.
   e. Brushless exciter with permanent magnet and controls to sustain and regulate single phase and three-phase fault current at 300 percent of rated current for up to 10 seconds. The exciter shall be capable of supplying the field excitation current required and shall deliver 150 percent of rated current for one minute without damage.
   f. Unit shall be specifically designed to accommodate the maximum phase to ground short circuit currents developed on a solidly grounded neutral system.
2. Efficiency at 0.80 power factor

Load	Efficiency (Minimum)
4/4	97.0%
3/4	96.0%
1/2	95.0%

3. Voltage Harmonic Content
   a. Total Harmonics - less than 5 percent.
   b. Individual Harmonics - less than 3 percent.
4. Voltage Regulation. Steady State. Regulated output voltage shall not vary from initial preset voltage by more than 0.25 percent of rated voltage upon application of full load, after transients have decayed to zero.
5. Voltage Drift. Shall not exceed ± 0.5 percent of rated voltage for a 60 degree F change for an 8 hour period.
6. The time from engine start to full load pickup shall not exceed 10 seconds.

1.08 QUALITY ASSURANCE

A. Design and manufacture shall be in an ISO 9001 certified facility.

B. Meet or exceed ANSI/NEMA MG1.

C. Meet or exceed relevant IEEE standards.

D. Assembly shall be UL listed.

E. Design and manufacture shall meet or exceed relevant NFPA requirements.

1.09 WARRANTY

A. The diesel engine generator sets, including all components and appurtenances, shall be warranted against failure caused by defects in materials or workmanship, including materials and labor from the date of Owner's acceptance.

B. Vendor shall warrant equipment to perform in accordance with the specified design conditions for a period of two years.

PART 2 PRODUCTS

2.01 STANDBY GENERATOR ACCEPTABLE MANUFACTURERS (ALL MANUFACTURERS SHALL COMPLY WITH SPECIFICATIONS)

A. Detroit Diesel (Stewart & Stephenson).

B. Cummins Power Generation (Southern Plains Power).

C. Caterpillar (Mustang Cat).

2.02 SYSTEM DESCRIPTION

A. Each diesel engine generator set shall be completely skid mounted in an outdoor weatherproof enclosure including a muffler located inside the enclosure. Enclosure door hinges and door hardware shall be Type 316 stainless steel. The generator set and enclosure shall be installed on synthetic isolation pads on a concrete foundation.

2.03 DIESEL ENGINE

A. Provide a 4-stroke water-cooled diesel engine with electric start. The engine aspiration shall be turbocharged and after-cooled. The engine shall develop sufficient power at synchronous speed for standby operation at full (net) generator output.

B. Emissions from the engine shall be in compliance with the latest and most stringent applicable limitations listed in the New Source Performance Standards (NSPS), the Texas Commission on Environmental Quality (TCEQ) regulations, the State Implementation Plan (SIP) rules, and other applicable limitations, including, but not limit to Best Available Control Technology (BACT) at the time the engine is put into operation. The engine shall be used for standby power as defined in the previous Paragraph titled, “Performance Requirements.”

2.04 FUEL SYSTEM

A. Provide an electronically controlled, direct fuel injection system. The diesel engine shall operate on no. 2 diesel fuel and newly formulated diesel fuels for low emissions if required by the TCEQ.

B. Include the following components:
   1. Replaceable, engine gear driven, self-priming, fuel transfer pump
   2. Replaceable fuel filters with service indicators
   3. Engine mounted fuel cooler
   4. Sub-Base tank with level indicator and low fuel level alarm located in the generator enclosure to monitor fuel level.
   5. Water separator
   6. Leak into containment tank alarm signal from the sub-base fuel tank.

2.05 LUBRICATION SYSTEM

A. Provide a factory installed lubrication system to deliver oil under pressure to all components requiring lubrication.

B. Include the following components:
   1. Crankshaft driven main oil pump
   2. Electric pre-lube oil pump, if required by the manufacturer
   3. Engine-mounted full flow engine coolant cooled oil cooler with automatic bypass
   4. Full flow replaceable oil filters with automatic bypasses and service indicators
   5. Oil level indicator
   6. Low oil pressure alarm and shutdown
   7. Oil pressure gauge

2.06 AIR INLET

A. Provide factory installed combustion air intake system.

B. Include the following components: Air filters with service indicators.

2.07 COOLING SYSTEM

A. Provide factory packaged cooling system for rejecting all heat generated by the engine with the exception of heat in the exhaust gases and radiant heat from the engine. There shall be one cooling system per engine. The cooling system shall be mounted on the skid.

B. Include the following components:
   1. One radiator per engine that shall include separate cooling cores for each engine jacket water and the after-cooler water. Each radiator shall be sized for 115% of engine's maximum heat rejection. Each radiator shall have a single engine driven fan. All rotating parts shall be enclosed with a personnel guard. The radiator shall be mounted as part of the skid. Include anti-freeze in the coolant, as recommended by the engine manufacturer, to protect the engine down to 20 degrees F, in the event the engine jacket cooler heaters fail.
   2. High temperature alarm.
   3. High temperature shutdown.
   4. Low coolant level.
   5. Engine mounted water pump for each coolant circuit.
   6. Engine mounted expansion tank with level sight glass for each coolant.
   7. Engine jacket coolant heaters shall be provided at 240 volts, single phase, 60 hertz.

2.08 EXHAUST SYSTEM

A. Provide a factory-assembled critical grade muffler. There shall be one muffler per engine sized for flow at maximum engine output. Each engine shall have one exhaust connection for connecting exhaust piping. This exhaust connection shall include a manufacturer's supplied stainless steel flexible connection to compensate for thermal expansion of the engine and exhaust piping. The flexible connection shall also provide vibration isolation between the engine and its exhaust piping. The muffler shall be designed for horizontal installation inside the generator enclosure.

B. The critical grade muffler minimum insertion loss shall be:
   1. 28 db at 63Hz
   2. 35 db at 1800Hz
   3. 32 db at 8000Hz

C. The muffler shells and all related exhaust piping, fittings, etc. shall be constructed of 316 stainless steel. The muffler shall have drains for removing condensate. Drain valves must be accessible outside of insulation. Drain piping shall extend down to within 2 inches of the concrete foundation.

D. The exhaust system shall be insulated to reduce heat gain inside the weatherproof sound attenuated enclosure. The insulation system shall be easily removed and reinstalled to allow access to components under the insulation.

2.02 VIBRATION ISOLATION SYSTEM

A. Provide a factory installed spring vibration isolation system for the diesel engine generator set that shall prevent the transmission of vibrations to the outdoor weatherproof sound attenuated enclosure.

2.03 GENERATOR

A. Type. Air-cooled, self-ventilated.

B. Insulation
   1. Class. Class F insulation system meeting the requirements of NEMA MG 1 and made of non-hygroscopic materials.
   2. Temperature Rise. Class B (80-degree C) rise over 40-degree C ambient by resistance measurement at fully rated load (1.0 service factor).
   3. Application. Vacuum pressure impregnated, sealed.

C. Windings and Leads. Use not less than ASTM B 173, Class G, stranded copper conductors with insulation the same as or better than specified in the preceding Insulation paragraph. Provide permanent identification numbers on leads according to NEMA MG 1. Provide each lead with additional identification within 6 inches of the stator frame. Use crimp-on, solderless copper terminals on leads and place heat-shrink insulation sleeves or covers between leads and terminals.

D. Construction
   1. Enclosure
      a. Heavy fabricated steel frame
      b. Indoors. Drip-proof, fully guarded machine. Include jacking bolts in frame.
   2. Stator. High-grade silicon steel lamination, precision punching and individually insulated.

E. Bearings
   1. Provide prepackaged regreasable bearings with a median expected life of 40,000 hours.
   2. Insulation. Prevent shaft-bearing frame currents.

F. Hardware. Provide structural bolts, washers, nuts, pins, and similar items manufactured of high-strength steel. Use only hexagon-head bolts and hexagon nuts. Use corrosion-resistant materials or protect hardware from corrosion by hot-dip galvanizing or by use of stainless steel components.

G. Nameplates
   1. Main Nameplate. Provide each generator with a stainless steel nameplate meeting the requirements of the National Electrical Code and NEMA MG 1 for synchronous generators. Include the following additional information on the main or an additional nameplate: insulation system classification, connection diagram, direction of rotation, electric phase rotation for NEMA standard direction of rotation and number of safe starts in succession, including length of waiting period.
   2. Heater Nameplate. Voltage and wattage.

3. Bearings Nameplate. Bearing identification and recommended lubricant.
4. Attachment. Attach nameplates to the generator with stainless steel pins or screws.

H. Terminal Boxes
1. Description. Provide conduit terminal boxes and terminal housing cabinets for all wiring connections to generator.
2. Material. Make small boxes of cast iron or cast bronze. Make large boxes of cabinet type construction of adequately braced 1/8-inch (11-gage) sheet steel. Use machine screws to fasten covers.
3. Gaskets. Use durable gaskets resistant to heat, grease and moisture-laden air to seal all joints between boxes and covers or between boxes and machine enclosure.
4. Auxiliary Leads. Terminate space heater and similar leads on 600-volt rated molded insulation terminal blocks with ring-tongue terminals under screws. Use only corrosion-resistant materials and brass screws. Effectively isolate terminal blocks for different functions by suitable air separation or individual boxes. Permanently identify all leads and terminals.

I. Space Heaters
1. Type. Electric resistance, silicon rubber clad or equivalent non-oxidizing exterior, with maximum surface temperature of 130 C (266 F). Alternatively, provide two stainless-steel-sheathed conventional space heaters, each with rated watts at the specified voltage equal to twice the required value, and connect in series.
2. Wattage. As required to avoid condensation during shutdown, but not less than twice the value given in the Appendix of IEEE Standard 43, paragraph A 1.3 (twice the length in feet times the diameter in feet divided by 35).
3. Voltage. 120 volts, single phase, 60 hertz for 1500 watts or less; 240 volts, single phase, 60 hertz for larger wattages.

J. Acceptable Generator Manufacturers. Acceptable generator manufacturers are: Electric Machinery, Ideal Electric, and Marathon Electric or the unit normally used by engine-generator manufacturer.

2.09 CONTROL SYSTEM

A. The control system shall provide digital voltage regulation. A digital governor equivalent to the Woodward 2301A analog governor shall be provided.

B. Provide fuel level indication, low fuel level alarm and tank fuel leak alarm.

2.10 STARTING SYSTEM

A. Heavy-duty, battery-driven electric starter motor.

B. Fully charged, lead-calcium, impact-resistant, plastic-cased, 24V DC storage battery mounted on the unit or in a separate corrosion-proof rack near the unit. Make battery capacity sufficient for four cranking cycles at firing speed of 30 seconds duration each with 15-second rest periods. Provide all battery cables, connections, electrolyte, water and a hydrometer.

C. Static, solid-state type battery charger unit which automatically controls the charge rate and which has an adjustable charging rate. Include a charging rate ammeter, a voltmeter, and a manual reset, thermal overload circuit breaker to protect the rectifier assembly and transformer. Select a charger suitable for operation at 120 volts, single phase, 60 hertz. Make charging time be 24 hours maximum. Mount charger on the wall of the sound attenuating enclosure, using adequate vibration isolation devices.

D. Engine-driven alternator with full-wave rectifier and transistorized voltage regulator for charging battery when engine is running.

2.11 PAINT

A. Protect the exterior surfaces with primer and one coat of alkyd-modified, enamel machinery paint. Provide primer and paint for field touch-up.

2.12 WIRING AND COMPONENT IDENTIFICATION

A. Identify power and control wiring with heat shrink tags as required by Specification 16195, Electrical Identification.

B. Identify equipment and internal components with nameplates as required by Specification 16195, Electrical Identification.

2.13 MAIN CIRCUIT BREAKER

A. Provide a generator thermal magnetic main circuit breaker inside the generator enclosure. The generator thermal magnetic main circuit breaker rating is indicated on the Project Drawings.

2.14 OUTDOOR WEATHERPROOF ENCLOSURE

A. Refer to Specification 16211.

2.15 SUB-BASE FUEL TANK

A. Acceptable Manufacturer: Generator Vendor

B. Sub-Base Fuel Tank Description
   1. The fuel tank shall be a steel tank with primary and secondary containment in accordance with UL Standard 142.

C. Tank Construction
   1. The primary steel tank shall be rectangular in shape and have continuous welds on all exterior seams, manufactured in accordance with UL listing requirements and UL Standard 142.
   2. The primary steel tank shall be pressure tested at 5 psig for 24 to 48 hours.
   3. The primary steel tank shall have an "emergency vent" system as per NFPA 30 Code requirements.
   4. The thru-tank leak detector tube to allow for physical checkup and monitoring capability between the primary and the secondary containment.

2.04 RESISTIVE LOAD BANK

A. Mounting: Radiator mounted on the outside of the generator weatherproof enclosure.

B. Minimum kW Size: 80% of the kW rating of the generator set.

C. Load Bank Steps: 4

D. Application of Steps: Switched by individual fused contactors.

E. Load Bank Controls: Located adjacent to the load bank in a NEMA 4X, Type 316 stainless steel hinged door cabinet. Provide manual and automatic controls. Energize the load bank in steps when the generator set is automatically exercised. Automatically dump the load bank when normal power is lost and load is transferred to the generator set. Design of load bank controls shall be by the generator set vendor.

F. Provide load bank 120 volt control power from an integral control power transformer.

G. Provide load bank over-temperature protection.

H. Load bank enclosure shall be fabricated from Type 316 stainless steel.

PART 3 EXECUTION

3.01 FACTORY TESTING

A. The manufacturer shall perform the following factory tests on each diesel engine generator. The tests shall be conducted in accordance with the manufacturer’s standard practice. The test values shall meet or exceed the requirements of NEMA MG 1. All instrumentation used for testing shall have been calibrated within 6 months of the test date and calibration shall be NIST traceable.
   1. Measurement of insulation resistance
   2. High potential testing
   3. Measurement of winding resistance
   4. Open circuit saturation curve
   5. Phase balance, current and voltage

6. Full load test for 1 hour, minimum
7. Fuel consumption at 25%, 50%, 75%, and 100% load

B. The manufacturer shall perform generator insulation resistance field tests on each diesel engine generator set. The Owner shall have the option of witnessing each test. The results of each test shall be submitted to the Owner for approval, prior to acceptance of each diesel engine generator set.

3.02 INSTALLATION

A. Follow manufacturer's installation procedures. Have installation supervised and approved by a qualified representative of the unit manufacturer.

3.03 START-UP

A. Provide the services of a factory-trained service engineer to inspect each diesel engine generator set installation and provide a report to Owner certifying that the installation complies with all requirements of manufacturer’s warranty.

B. Provide the services of a factory-trained service technician to perform start-up on each diesel engine generator set in accordance with the start-up, installation and maintenance manuals as published by manufacturer. Provide a copy of the completed start-up record data for each diesel engine generator set as part of the operation and maintenance manuals.

3.04 FIELD TESTS

A. General
1. Perform field tests at the site after installation is complete and in the presence of the Owner’s Representative. Notify Owner's Representative 15 working days before each test.
2. Manufacturer's Representative. Have the engine generator manufacturer furnish a representative to operate the unit during the field tests, to check all details of the installation, and to instruct the operators. Include the services of the representative at no additional cost to the Owner.
3. Preparation for Testing. Have the engine generator system completed and ready for operation at the time field tests are to be run. Fill fuel tanks, provide all necessary lube oil, coolant, and other fluids, and install new, unused oil and air filter elements.
4. Instruments. Provide all instruments necessary to conduct the tests.
5. Design, Specification, and NFPA 110 Parameters. For each recorded parameter, provide a written tabulation of the manufacturer’s published range of permissible operating values and design parameters. Tabulation shall also include parameters specified by this section, and parameters required in accordance with field testing per NFPA 110.

B. Installation Test. Perform on-site installation test in accordance with NFPA 110, section 5-13.2.3, in the presence of the Owner's Representative.

C. Full Load Test. Perform full load test in accordance with NFPA 110, sections 5-13.2.4, 5-13.2.5, 5-13.2.6, and 5-13.2.7, in the presence of the Owner's Representative.

D. Crank Cycle Test. Perform crank cycle test in accordance with NFPA 110, section 5-13.2.8, in the presence of the Owner's Representative.

E. 6-Hour Test
   1. Complete a 6-hour, full-load test using a vendor furnished resistive load bank as a condition for final acceptance.
   2. The 6-hour full load test may be performed in conjunction with or as an extension of the NFPA 110 Full Load Test specified in paragraph 3.3C of this section.
   3. Read and record all gauges and meters before starting the test, then every 5 minutes during the first 15 minutes, then every 15 minutes during the next 2 hours, and then every half hour during remainder of the 6-hour period.
   4. Remove load and run engine generator at no load for 15 minutes; then shut unit down and immediately make one fuel tank recording of all gauge and meter indications.
   5. Remove load bank and restore all electrical connections, as required.
   6. Have recordings field witnessed during test by the Owner.
   7. Deliver copies of witnessed recordings to the Engineer and the Owner's Representative within one week of the test, quantities in accordance with Division One requirements. Where not specified elsewhere, deliver six copies to the Owner's Representative.

F. Actual Load Tests
   1. After successful completion of the 6-hour, full-load test described above, make additional on-site tests using actual available loads in the presence of the Owner's Representative to demonstrate satisfactory performance of the complete engine generator system. Include different sequenced start-ups of the various specified loads, as directed by the Owner's Representative. This test will be scheduled at a time and date determined by the Owner.
   2. After all other tests have been successfully completed, operate each engine generator system under actual available loads for up to 4 hours of successful operation.

G. After final testing, refill fuel tanks. Verify that coolant and lubricants are at satisfactory levels, fill as required.

3.05 VENDOR TRAINING

A. Vendor shall provide one 4 hour training session using the installed unit. Vendor shall provide handout training documents at the training session.

END OF SECTION

SECTION 16211

GENERATOR OUTDOOR WEATHERPROOF ENCLOSURE

PART 1 GENERAL

1.01 SCOPE OF WORK

A. This section specifies an outdoor weatherproof enclosure for a standby diesel engine generator.

B. Standby Diesel Engine Generator supplier shall furnish the Generator Outdoor Weatherproof Enclosure.

1.02 MEASUREMENT AND PAYMENT

A. No separate payment will be made for work performed under this Section.

1.03 RELATED SECTIONS

A. Section 01330 - Submittal Procedures

B. Section 01782 - Operations and Maintenance Data

C. Section 16195 – Electrical Identification

D. Section 16210 – Standby Diesel Engine Generator

1.04 REFERENCE STANDARDS

A. Generator enclosure design shall be adequate to withstand the following load: 110 mph wind speed in 3 second gusts in accordance with Section 1609.3 and Table 1609.3.1 of the City of Houston Building Code; enclosure roof load to be 200PSF. Design of the enclosure shall be by a Professional Structural Engineer licensed in Texas.

1.05 SUBMITTALS

A. The submittal for the Outdoor Weatherproof Enclosure shall be included with the Standby Diesel Engine Generator submittal.

B. Submit the following under the provisions of Section 01330 – Submittal Procedures:
   1. Dimensioned shop drawings. Submit dimensioned shop drawings of the sound attenuating enclosure and accessories (including anchor bolts).
   2. Structural calculations for the enclosure shall be sealed by a Professional Structural Engineer licensed in Texas.
   3. Product Data. Provide data on components included in the enclosure such as door hardware, louvers, light fixtures, lamps and similar items.

1.06 WARRANTY

A. Vendor shall warrant equipment to perform in accordance with the specified design conditions for a period of two years.

PART 2 PRODUCTS

2.01 ACCEPTABLE MANUFACTURERS

A. ACS Manufacturing, Inc.

B. Engine & Compressor Accessories.

2.02 CONSTRUCTION

A. The following sub-paragraphs describe the general requirements for the outdoor weatherproof enclosure in order to define a level of quality for the enclosure. Enclosures of different design and with a similar level of quality will be considered.

B. General construction of the enclosure walls and roof shall consist of dual wall, prefabricated tongue-and-groove type acoustic panels with a 14 gauge, galvanized steel outer skin: a 22 gauge, perforated galvanized steel inner skin; roll formed internal channel stiffeners and framing; and 4” thick with 4 lbs/cu. ft. density mineral glass fiber acoustical/thermal insulation completely filling the void between the inner and outer skins. Also included shall be a 2 mil Mylar protective liner installed between the perforated inner skin and the insulation material. An acoustical labyrinth shall be achieved at each panel joint or seam.

C. The enclosure shall be a lift-off removable structure and shall consist of a structural rectangular tube system. The structure shall consist of two full length base members, two full width end base members, four full height corner columns, and eight full width roof beams. This structure shall be completely seal welded at each connection point and all open tube ends shall be capped with seal welded plates. Lifting eyes rated at a safe working load shall be installed on the structure. Anchor bolt clips shall be located and installed along the inside perimeter of the structural tube steel base frame. Type 316 stainless steel expansion bolts shall be used to anchor the structure to the concrete foundation.

D. All doors shall be factory mounted in a separate, self supporting, welded steel frame. All door hardware shall be factory mounted. Door hardware to include 316 stainless steel Component Hardware Group brand refrigeration type slam locks with exit bar, two-point slam and take-up locks with inside release handle, Component Hardware Group, Inc. ball bearing heavy duty hinges, and positive type stainless steel door holders. Doors shall have neoprene or EPDM perimeter gasketing. Doors shall seal completely along gasketed perimeter.

E. Include 6” deep stationary weather louvers with bird screens for the supply and exhaust. These louvers shall be mounted to the enclosure’s structural tube steel frame at each end of the enclosure. Louvers are to be removable and have lifting eyes to aid in removal.

F. All exterior surfaces (except stainless steel components) and all interior surfaces (except galvanized components) shall be cleaned, primed and painted with two coats of the manufacturer’s standard paint. The exterior shall be painted light tan. The interior shall be painted ANSI 61 gray.

G. The general configuration of the outdoor weatherproof enclosure is reflected on the Project Drawings.

H. Provide four-foot long, two-lamp industrial type fluorescent light fixtures with lamp wire guards, zero degree F electronic ballasts and T-8 lamps for normal interior lighting. Provide a light switch at each door. Connect light fixtures and switches with rigid aluminum conduit. Power to lighting will originate from a Mini-Power Center located inside the enclosure.

I. Provide an industrial type battery operated emergency lighting units with 90 minute battery capacity. Connect to the Mini-Power Center with rigid aluminum conduit.

PART 3 EXECUTION

3.01 INSTALLATION

A. Install the outdoor weatherproof enclosure over the generator skid and bolt to the concrete foundation with type 316 stainless steel expansion bolts.

END OF SECTION

SECTION 16213

DIESEL FUEL MANAGEMENT SYSTEM

PART 1 GENERAL

1.01 SCOPE OF WORK

A. This section specifies an automated six (6) stage diesel fuel management system capable of removing 99.7% of free water and 99.5% of particulate contaminants with a maximum capacity of 200 gallons to remove moisture, sludge and other contaminants from stored diesel fuel for a standby diesel engine generator. Flow rate of equipment to be 3 gallons per minute. Equipment shall also be utilized for the thorough mixing of fuel additives for improved combustion as well as bacteria/algae abatement.

B. The Diesel Fuel Management System to provide shutdown and alarm functions in the event of internal fuel leakage, or clogged filter.

C. Connection to ½" 316 stainless steel tubing between the Diesel Fuel Management System and Base Style Fuel Tank via 316 SS full port ball valves.

1.02 MEASUREMENT AND PAYMENT

A. No separate payment will be made for work performed under this Section.

1.03 RELATED SECTIONS

A. Section 01330 – Submittal Procedures.

B. Section 01782 – Operations and Maintenance Data.

C. Section 16195 – Electrical Identification.

D. Section 16210 – Standby Diesel Engine Generators.

1.04 REFERENCE STANDARDS

A. NEMA, National Electrical Manufacturers Association.

B. NEC, National Electrical Code, (latest edition).

1.05 SUBMITTALS

A. The submittal for the Diesel Fuel Maintenance System shall be included with Standby Diesel Engine Generator submittal.

B. Submit the following under the provisions of Section 01330 – Submittal Procedures:
   1. Dimensioned shop drawings. Submit dimensioned shop drawings of the equipment enclosure and accessories.
   2. Product Data. Provide data on all components included in the enclosure complete with a separate recommended spare parts list.

1.06 WARRANTY

A. Equipment supplier shall warrant equipment to perform in accordance with the specified design conditions for a period of one year after commissioning.

PART 2 PRODUCTS

2.01 ACCEPTABLE MANUFACTURER

A. ACS Manufacturing, Inc. – Denison, TX.

2.02 CONSTRUCTION

A. The following sub-paragraphs describe the general requirements for the Diesel Fuel Management System enclosure in order to define a level of quality for the equipment. Systems of similar design and with a similar level of quality will be considered but must be pre-approved prior to bid date.

B. Diesel Fuel Management System shall be capable of filtering owners stored diesel fuel to remove 99.7% of moisture (water) and 99.5% of particulate contaminants via a 6 Stage process. Operating personnel shall be able to program set running periods for the operation of this equipment. Operating times can include operation during any day or group of days.

C. Diesel Fuel Management System enclosure shall be lockable.

D. General construction of the enclosure shall consist of minimum 14 gauge fabricated steel NEMA 4 panel of sufficient size to include all components to provide a complete operating system. A built-in fuel containment reservoir shall be located in the bottom to contain any fuel leaks. Provide a removable sub-panel for the installation of fuel filtering equipment, pump, controls, fittings, etc. Door shall be hinged on the left side. Enclosure to be phosphate cleaned of all manufacturing oils, primed and coated with durable, chemical resistant enamel. Powder coating can be substituted for the enamel paint coating.

E. The enclosure shall be mounted on 316 SS strut rails mounted inside of a drop over outdoor weatherproof enclosure described under Specification 16211. Type 316 stainless steel strut and fasteners shall be used to attach equipment enclosure to acoustical sound enclosure.

F. Equipment to be supplied shall include but not be limited to the following devices:
   1. 80 Mesh Strainer with stainless steel screen.
      a. Stage 1: Coarse contaminant removal

2. Coale Manufacturing Co. 2 Stage Separator (Coalescing Filter) with manual drain and water sensor detector connected to controls for high level shutdown of pump.
   a. Stage 2: Primary Contaminant Removal
   b. Stage 3: Primary Water Removal
3. ALGAE-X LG-X Series magnetic Fuel Conditioner
   a. Stage 4: Conditioning and stabilization of fuel
4. Oberdorfer 3 GPM cast bronze gear pump with. motor
5. 2 Stage Fuel/water separator with manual drain (Water Separator and Filter) with replaceable 2 micron filter, see-through polycarbonate viewing bowl with manual drain and water level sensor connected to controls for high level shutdown of pump.
   a. Stage 5: Secondary Water Removal
   b. Stage 6: Polishing Element Secondary Water Removal
6. GEM Vacuum Switch rated 5A @ 120/240V AC with Buna-N or Viton seal. Provide glycerin filled vacuum gauge.
7. Gem Pressure Switch rated 5A @ 120/240V AC with Buna-N or Viton seal. Provide glycerin filled pressure gauge.
8. Leak Detector Switch for the bottom of the cabinet (reservoir)
9. Sampling port located inside of cabinet
10. Pump bypass loop

G. Control system shall be mounted in a UL 508A NEMA 4X (polycarbonate) box. Programmable 7-day controller including controller with incorporated LCD screen, power supply, motor contactor, motor overload relay, terminal blocks, on-off-auto selector switch, piezoelectric alarm horn and alarm lights, push button emergency stop on outside of cabinet (remote mount shall be optional), lockable disconnect switch and Form C dry contact for general alarm and pump running for remote or SCADA indication. System shall be capable of providing optional MODBUS (RS 485) serial and Ethernet TCP/IP connections.

H. Provide a leak detector within the bottom constructed enclosure reservoir to alarm and shut down circulation pump in the event of fuel spillage as a result of component leakage.

I. Power for Automated Diesel Fuel Management System will originate from a Mini-Power Center located inside the generator acoustical enclosure. Provide minimum 30A, 1P, 120VAC circuit for equipment power. Connect to the Mini-Power Center with rigid aluminum conduit or liquid tight flexible conduit per NEC.

PART 3 EXECUTION

3.01 INSTALLATION

A. Install the automated fuel management enclosure inside the sound abatement enclosure over the supply and return fuel lines block valves. Attach the enclosure to the sound abatement enclosure with type 316 stainless steel fasteners.

B. Program equipment run time(s) per equipment and fuel manufacturer's recommendations. Test and certify complete and operating system.

C. Provide six (6) replaceable filter cartridges of each type with system. Deliver to owner upon startup of equipment.

3.02 TRAINING

A. Provide a minimum of ½ day training to instruct owners operating personnel in proper setup, programming and operation of this fuel management system.

3.03 O & M MANUAL

A. A. Provide Operations and Maintenance Manual covering all aspects of the fuel management system including but not limited to drawings, parts lists component cut sheets and recommended spare parts list in a durable binder. Provide (6) O & Manuals at startup.

END OF SECTION

SECTION 16220

AUTOMATIC TRANSFER SWITCH

PART 1 GENERAL

1.01 SCOPE OF WORK

A. Furnish all labor, materials, equipment and incidentals to install an automatic transfer switch (ATS) with programmable delayed transition time on transfer to either source. The ATS will be used to connect normal or standby power to load as indicated on the Contract Drawings.

1.02 MEASUREMENT AND PAYMENT

A. No separate payment will be made for work performed under this Section.

1.03 RELATED SECTIONS

A. Section 01330 - Submittal Procedures

B. Section 01782 - Operations and Maintenance Data

C. Section 16195 – Electrical Identification

D. Section 16210 – Standby Diesel Engine Generators

1.04 APPLICABLE STANDARDS

A. The combination automatic transfer bypass-isolation switches covered by these specifications shall be designed, tested, and assembled in strict accordance with all applicable standards of ANSI, U.L., IEEE and NEMA.

1.05 SUBMITTALS

A. Submit the following under provisions of Section 01330 – Submittal Procedures:
   1. Descriptive literature
   2. Plan, elevation, side, and front view arrangement drawings, including overall dimension, weights and clearances, as well as mounting or anchoring requirements and conduit entrance locations.
   3. Schematic diagrams.
   4. Wiring diagrams.
   5. Accessory list.

1.06 OPERATION AND MAINTENANCE MANUALS

A. Provide Operation and Maintenance manuals in accordance with Section 01782.

PART 2 PRODUCTS

2.01 ACCEPTABLE MANUFACTURERS

A. Russelectric Model RTS-03B with RPTCS Control System

2.02 CONSTRUCTION

A. General
1. The automatic transfer switch (ATS) shall be furnished as shown on the drawings. Voltage and continuous current ratings and number of poles shall be as shown on the Contract Drawings.
2. On 3 phase, 4 wire systems, utilizing ground fault protection, a true 4 pole switch shall be supplied with all four poles mounted on a common shaft. The continuous current rating and the closing and withstand rating of the fourth pole shall be identical to the rating of the main poles.
3. The automatic transfer switch shall be mounted in a freestanding NEMA 1 enclosure, unless otherwise indicated. Enclosures shall be fabricated from 12 gauge steel. The enclosure shall be sized to exceed minimum wire bending space required by UL 1008. Both units shall be bused together with silver plated copper bus to provide a complete pre-tested assembly. Aluminum bus, and/or cable interconnections are not acceptable. Construction shall be such that the contractor needs to install only the power and control connections.
4. The transfer switch shall be equipped with an internal welded steel pocket, housing an operations and maintenance manual.
5. The automatic transfer switch shall be top and bottom accessible.
6. The main contacts shall be capable of being replaced without removing the main power cables.
7. The main contacts shall be visible for inspection without any major disassembly of the transfer switch.
8. All bolted bus connections shall have Belleville compression type washers.
9. When a solid neutral is required, a fully rated bus bar with required copper solderless mechanical type neutral lugs shall be provided.
10. Control components and wiring shall be front accessible. All control wires shall be multiconductor 14 gauge 600 volt SIS switchboard type point to point harness. All control wire terminations shall be identified with tubular sleeve-type markers.
11. The switch shall be equipped with 90 degrees C rated copper solderless mechanical type lugs.
12. The complete automatic transfer switch assembly shall be factory tested to ensure proper operation and compliance with the specification requirements. A copy of the factory test report shall be available upon request.

B. Automatic Transfer Switch
1. The transfer switch shall be double throw, actuated by <u>two electric operators</u> momentarily energized, and connected to the transfer mechanism by a simple over center type linkage. Minimum transfer time shall be 400 milliseconds.

2. The normal and emergency contacts shall be positively interlocked mechanically and electrically to prevent simultaneous closing. Main contacts shall be mechanically locked in both the normal and emergency positions without the use of hooks, latches, magnets, or springs, and shall be silver-tungsten alloy. Separate arcing contacts with magnetic blowouts shall be provided on all transfer switches. Interlocked, molded case circuit breakers or contactors are not acceptable.
3. Transfer switches of all ampere ratings shall use a stored energy, "quick-break", "quick-make" design. Transfer switches which rely on electrical operator speed to move contacts are not acceptable.
4. The transfer switch shall be equipped with a safe external manual operator, arranged so that the transfer switch quick break - quick make mechanism can be operated manually under load without opening the enclosure door, designed to prevent injury to operating personnel. The manual operator shall provide the same contact to contact transfer speed as the electrical operator to prevent a flashover from switching the main contacts slowly. The external manual operator shall be safely operated from outside of the transfer switch enclosure while the enclosure door is closed.
5. Provide 3 current transformers on the load size of the ATS which match the current rating of the ATS.

C. Automatic Transfer Switch Controls
1. The transfer switch shall be equipped with a microprocessor based control system, to provide all the operational functions of the automatic transfer switch. The controller shall have two asynchronous serial ports. The controller shall have a real time clock with Nicad battery back-up.
2. The CPU shall be equipped with self diagnostics which perform periodic checks of the memory I/O and communication circuits, with a watchdog/power fail circuit
3. The controller shall also be capable of monitoring, logging and trending power data.
4. The controller shall be accurate to 1% measured. Voltage and current for all phases shall be sampled simultaneously to assure high accuracy in conditions of low power factor or large waveform distortions (harmonics).
5. The controller shall be capable of operating at nominal frequencies of 45 to 66 Hz.
6. The controller shall accept inputs from industry standard current transformers (5A secondary). Direct phase voltage connections, 600 VAC and under, shall be possible without the use of PT's.
7. The controller shall be capable of being applied in single or 3-phase, three and four wire circuits.
8. All setup parameters required by the controller for power monitoring shall be stored in non-volatile memory and retained in the event of a control power interruption.
9. The following metered readings shall be communicated by the Controller, via local display and serial communication.
   a. Current, per phase RMS and neutral
   b. Current Unbalance %
   c. Voltage, phase-to-phase and phase-to-neutral
   d. Voltage Unbalance %

   e. Real power (KW), per phase and 3-phase total
   f. Apparent power (KVA), per phase and 3-phase total
   g. Reactive power (KVAR), per phase and 3-phase total
   h. Power factor, 3-phase total & per phase
   i. Frequency
   j. Accumulated Energy, (KWH, KVAH, and KVARH)
10. Displaying each of the metered quantities shall be accomplished through the use of menu scroll buttons.
11. Setup for systems requirements shall be allowed through the local access display. Setup provisions shall include:
   a. CT rating (xxxxx:5)
   b. System type (single; three phase, 3 or 4 wire)
12. Reset of the following electrical parameters shall also be allowed from the local access display:
   a. Real Energy (KWH)
   b. Apparent Energy (KVAH)
   c. Reactive Energy (KVARH)
13. All reset and setup functions shall have a means for protection against unauthorized/accidental changes.
14. The Controller shall be capable of storing records in memory for access either locally or remotely for up to 100 events. The reports shall include date, time and a description of the event and shall be maintained in a non volatile memory.
15. The controller shall use industry standard open architecture communication protocol for high speed serial communications via multidrop connection to other controllers and to a master terminal with up to 4000 ft of cable, or further, with the addition of a communication repeater. The serial communication port shall be RS422/485 compatible.
16. The serial communication port shall allow interface to either the manufacturer's or the owner's furnished remote supervisory control.
17. The controller shall have password protection required to limit access to qualified and authorized personnel.
18. The controller shall include a 20 character, LCD display, with a keypad, which allows access to the system.
19. The controller shall be capable of storing the following records in memory for access either locally or remotely:
   a. Number of hours transfer switch is in the emergency position (total since record reset).
   b. Number of hours emergency power is available (total since record reset).
   c. Total transfer in either direction (total since record reset).
   d. Date, time, and description of the last four source failures.
   e. Date of the last exercise period.
   f. Date of record reset.

D. Sequence of Operation
   1. When the voltage on any phase of the normal source drops below 80% or increases to 120%, or frequency drops below 90%, or increase to 110%, or 20% voltage differential between phases occurs, after a programmable time delay period of 0-9999 seconds factory set at 3 seconds to allow for momentary dips, the engine starting contacts shall close to start the generating plant.
   2. The transfer switch shall transfer to emergency when the generating plant has reached specified voltage and frequency on all phases.
   3. After restoration of normal power on all phases to a preset value of at least 90% to 110% of rated voltage, and at least 95% to 105% of rated frequency, and voltage differential is below 20%, an adjustable time delay period of 0-9999 seconds (factory set at 300 seconds) shall delay retransfer to allow stabilization of normal power. If the emergency power source should fail during this time delay period, the switch shall automatically return to the normal source.
   4. After retransfer to normal, the engine generator shall be allowed to operate at no load for a programmable period of 0-9999 seconds, factory set at 300 seconds.

E. Automatic Transfer Switch Accessories
   1. Programmable three phase sensing of the normal source set to pickup at 90% and dropout at 80% of rated voltage and overvoltage to pickup at 120% and dropout out at 110% of rated voltage. Programmable frequency pickup at 95% and dropout at 90% and over frequency to pickup at 110% and dropout at 105% of rated frequency. Programmable voltage differential between phases, set at 20%, and phase sequence monitoring.
   2. Time delay for override of momentary normal source power outages (delays engine start signal and transfer switch operation). Programmable 0-9999 seconds. Factory set at 3 seconds.
   3. Time delay to control contact transition time on transfer to either source. Programmable 0-9999 seconds, factory set at 10 seconds.
   4. Time delay on retransfer to normal, programmable 0-9999 seconds, factory set at 300 seconds if not otherwise specified, with overrun to provide programmable 0-9999 second time delay, factory set at 300 seconds, unloaded engine operation after retransfer to normal.
   5. Time delay on transfer to emergency, programmable 0-9999 seconds, factory set at 3 seconds.
   6. A maintained type load test switch shall be included to simulate a normal power failure, keypad initiated.
   7. A remote type load test switch shall be included to simulate a normal power failure, remote switch initiated.
   8. A time delay bypass on retransfer to normal shall be included. Keypad initiated.
   9. Contact, rated 10 Amps 30 volts DC, to close on failure of normal source to initiate engine starting.
   10. Contact, rated 10 Amps 30 volts DC, to open on failure of normal source for customer functions.

11. Light emitting diodes shall be mounted on the microprocessor panel to indicate: switch is in normal position, switch is in emergency position and controller is running.
12. A plant exerciser shall be provided with (10) 7 day events, programmable for any day of the week and (24) calendar events, programmable for any month/day, to automatically exercise generating plant programmable in one minute increments. Also include selection of either "no load" (switch will not transfer) or "load" (switch will transfer) exercise period. Keypad initiated.
13. Provision to select either "no commit" or "commit" to transfer operation in the event of a normal power failure shall be included. In the "no commit position," the load will transfer to the emergency position unless normal power returns before the emergency source has reach 90% of it's rated values (switch will remain in normal). In the "commit position" the load will transfer to the emergency position after any normal power failure. Keypad initiated.
14. Two auxiliary contacts rated 10 Amp, 120 volts AC (for switches 100 to 800 amps) 15 amp, 120 volts AC (for switches 1000 to 4000 amps), shall be mounted on the main shaft, one closed on normal, the other closed on emergency. Both contacts will be wired to a terminal strip for ease of customer connections.
15. A three phase digital LCD voltage readout, with 1% accuracy shall display all three separate phase to phase voltages simultaneously, for both the normal and emergency source.
16. A digital LCD frequency readout with 1% accuracy shall display frequency for both normal and emergency source.
17. An LCD readout shall display normal source and emergency source availability.
18. Include (2) time delay contacts that open simultaneously just (milliseconds) prior to transfer in either direction. These contacts close after a time delay upon transfer. Programmable 0-9999 seconds after transfer.

F. Other Items

1. Automatic transfer switches and bypass-isolation switches shall be listed by Underwriters Laboratories, Inc., Standard UL-1008 with 3 cycle short circuit closing and withstand as follows:

RMS Symmetrical Amperes 480 VAC

3 Cycle Amperes	Closing and Withstand	Rating with Current Limiting Fuses
100-400	42,000	200,000
600-800	65,000	200,000
1000-1200	85,000	200,000
1600-4000	100,000	200,000

2. During the 3 cycle closing and withstand tests, there shall be no contact welding or damage. The 3 cycle tests shall be performed without the use of current limiting fuses. The test shall verify that contacts separation has not occurred, and there is contact continuity across all phases. Test procedures shall be in accordance with
UL-1008, and testing shall be certified by Underwriters' Laboratories, Inc.
3. When conducting temperature rise tests to UL-1008, the manufacture shall include post-endurance temperature rise tests to verify the ability of the combination transfer bypass-isolation switch to carry full rated current after completing the overload and endurance tests.
4. The microprocessor controller shall meet the following requirements:
   a. Storage conditions - 25 degrees C to 85 degrees C
   b. Operation conditions - 20 degrees C to 70 degrees C ambient
   c. Humidity 0 to 99% relative humidity, non-condensing
   d. Capable of withstanding infinite power interruptions
   e. Surge withstand per ANSI/IEEE C-37.90A-1978
5. Manufacturer shall provide copies of test reports upon request.
6. Provide a 12” x 6” red nameplate engraved with” “Open standby generator circuit breaker prior to opening enclosure. Generator is started automatically by load bank controls and causes the emergency terminals to be energized”.

G. Manufacturer
1. The manufacturer of the automatic transfer switch shall have a factory certified field service representative located within 100 miles that is available to arrive at the project site within 4 hours after being called.
2. The automatic transfer switch manufacturer shall employ a nationwide factory-direct, field service organization, available on a 24-hour a day, 365 days a year, to answer calls.
3. The manufacture shall include an 800 telephone number, for field service contact, affixed to each enclosure.
4. The manufacturer shall maintain records of each automatic transfer switch, by serial number, for a minimum 20 years.

2.03 WIRING AND COMPONENT IDENTIFICATION

A. Identify power and control wiring with tags as required by Specification 16195, Electrical Identification.

B. Identify equipment and internal components with nameplates as required by Specification 16195, Electrical Identification.

PART 3 EXECUTION

3.01 INSTALLATION

A. The Automatic Transfer Switch shall be provided with adequate lifting means for ease of installation whether wall or floor mounted.

B. Provide access and working space as indicated or as required by the NEC.

C. Install unit on a 3-1/2” reinforced concrete pad.

3.02 ADJUSTMENTS

A. Tighten assembled bolted connections with appropriate tools to manufacturer's torque recommendations prior to first energization.

3.03 FACTORY START-UP

A. Provide the services of a factory certified technician to factory startup the unit and correct any deficiencies. Provide a certified startup report.

3.04 TESTING

A. Provide the services of a factory certified technician to fully function test the unit with the generator set to confirm proper operation. Provide a certified test report.

3.05 VENDOR TRAINING

A. Vendor shall provide one 4 hour training session for up to 10 owner’s representatives. Provide training handouts and product literature.

END OF SECTION

SECTION 16402

UNDERGROUND DUCT BANKS

PART 1 GENERAL

1.01 SECTION INCLUDES

A. Underground electrical duct banks.

1.02 MEASUREMENT AND PAYMENT

A. No separate payment will be provided for work performed under this Section.

B. Refer to Section 01270 – Measurement and Payment.

1.03 RELATED WORK

A. Section 16111 – Conduit, Fittings and Bodies.

B. Section 16195 – Electrical Identification.

1.04 REFERENCES

A. National Fire Protection Association (NFPA): No. 70 - National Electrical Code (NEC) Appendix B.

1.05 SUBMITTALS

A. Catalog cut sheets of the ducts and spacers.

1.06 DELIVERY, STORAGE AND HANDLING

A. Have duct spacers and associated hardware packed and crated to avoid damage during shipment and handling.

B. Clearly mark packages or crates stating that the material is for electrical duct banks only.

1.07 DEFINITION

A. A duct bank is one or more electrical conduits grouped together and surrounded by a common encasement of concrete.

PART 2 PRODUCTS

2.01 ACCEPTABLE MANUFACTURERS

A. Thomas and Betts.

B. Underground Devices Inc.

C. Walker Division, Butler Manufacturing Company.

2.02 MATERIALS AND EQUIPMENT

A. Conduit. Construct ducts using Schedule 40 rigid PVC conduit for straight horizontal runs and for bends less than 15 degrees. For horizontal bends 15 degrees and greater and all stub-ups, use epoxy fiberglass conduit. Refer to Section 16111 - Conduit, Fittings and Bodies for additional requirements.

B. Spacers. Secure conduit with non-magnetic, universal, interlocking-type spacers for both horizontal and vertical duct arrangements.

C. Concrete. Use Grade 40 steel reinforced, Class A red concrete as duct encasement. Single conduit duct banks do not require steel reinforcement, but do require Class A red concrete encasement. Refer to Section 03315 – Concrete for Utility Construction.

PART 3 EXECUTION

3.01 PREPARATION

A. Verify from Contract Drawings and field survey that the location of duct banks does not interfere with any existing or new underground facilities.

B. Verify that materials are on site in proper condition and that sufficient quantity is on hand for the work.

C. Verify that trenches are in the correct places and prepared with sufficient depth and width to accommodate the duct banks, reinforcing rod, and concrete.

D. Be prepared for inspection of the duct banks before reinforcing rod is installed.

E. Before pouring concrete, verify that the ducts are free of debris and properly installed in the support and spacer systems and that the ducts are properly fitted together and firmly held in place by the hold down hardware.

F. Provide 24-hour notice to City Engineer and the Local Code Inspector for cover-up inspection before pouring electrical conduit ductbanks.

3.02 INSTALLATION

A. Use the size of conduit as indicated on the Contract Drawings for the various duct banks required for the project. Conduit type is indicated in Section 16111 – Conduit, Fittings and Bodies. Refer to Section 02317 – Excavation And Backfill For Utilities. Install duct banks in accordance with the “Typical Duct Bank Installation” details in the Contract Documents.

B. Make duct bank installations and penetrations through foundation walls watertight.

C. Assemble duct banks using non-magnetic saddles, spacers and separators. Position separators to provide 2-inch minimum concrete separation between the outer surfaces of the conduits.

D. Provide a 3-inch minimum structural concrete covering on both sides, top and bottom of concrete envelopes around conduits. Add red dye at the rate of 10 pounds per cubic yard to concrete used for envelopes for easy identification during subsequent excavation. Refer to Section 03315 – Concrete for Utility Construction.

E. Firmly fix ducts in place during pouring of concrete. Carefully spade and vibrate the concrete to ensure filling of spaces between ducts.

F. Make bends with sweeps of radius not less than 12 times the smallest diameter of the raceway.

G. Make a transition from Schedule 40 PVC to epoxy fiberglass conduit where duct banks enter structures or turn upward for continuation above grade.

H. Make bends of 15 degrees or more using epoxy fiberglass conduit.

I. Reinforce all duct banks with two or more ducts. Single conduit duct banks do not require steel reinforcement.
   1. Unless otherwise noted on the Contract Drawings, reinforce with No. 5 longitudinal steel bars placed at each corner and along each face at a maximum parallel spacing of 12 inches on centers, and No. 4 stirrups transversely placed at 36-inch maximum longitudinal intervals.
   2. Maintain a maximum clearance of 2 inches from bars to the edge of the concrete encasement.

J. Where ducts enter structures such as handholes, manholes, pull boxes, or buildings, terminate the ducts in suitable end bells, insulated L-bushings, Meyers hubs or couplings on steel conduits. Tag conduit entering pull boxes and manholes with stamped, stainless steel tags. Identify as designated in cable and conduit schedule or on the plans in the Contract Drawings.

K. Do not backfill with material containing large rock, paving materials, cinders, large or sharply angular substances, corrosive material, or other materials which can damage or contribute to corrosion of ducts or prevent adequate compaction of fill.

L. Install a bare stranded 4/0 copper duct bank ground in each duct bank envelope. Make ground electrically continuous throughout the entire duct bank system. Connect ground to switchgear and MCC ground buses.

M. After completion of the duct bank and prior to pulling cable, pull a mandrel, not less than 12 inches long and with a cross section approximately one-fourth inch less than the inside cross section of the duct, through each duct. Then pull a rag swab or sponge through to remove any particles of earth, sand or gravel that may have been left in the duct. Re-pull the rag or sponge swab until the swab emerges clean.

N. Use hemp rope to pull conductors into PVC conduit. Do not use nylon or wire cable for this purpose.

O. Install a warning ribbon approximately 12 inches below finished grade over underground duct banks. Refer to Section 16195 - Electrical Identification.

P. For manholes and pull boxes below grade, install non-metallic cable racks to support cables properly around the perimeter of the manholes or pull box.

END OF SECTION

SECTION 16460

TRANSFORMERS 600 VOLTS AND LESS

PART 1 GENERAL

1.01 SUMMARY

A. Section Includes:
   1. General purpose, dry type transformers.
   2. Drive isolation transformers.
   3. Control and signal transformers.

1.02 MEASUREMENT AND PAYMENT

A. No separate payment will be made for work performed under this Section.

1.03 RELATED SECTIONS

A. Specification 16195, Electrical Identification.

1.04 REFERENCES

A. American National Standards Institute, Inc./Institute of Electrical and Electronics Engineers (ANSI/IEEE):
   1. ANSI/IEEE C2-90 – National Electrical Safety Code.
   2. ANSI/IEEE C57.12.80-78 – Standard Terminology for Power and Distribution Transformers.

B. National Electrical Manufacturers Association (NEMA):
   1. NEMA LA 1-86 – Surge Arrestors.
   2. NEMA ST 1-88 – Specialty Transformers (Except General-Purpose Type).
   3. NEMA ST 20-86 – Dry-Type Transformers for General Applications.

C. Underwriters Laboratories, Inc. (UL):
   1. UL 486A-80 – Wire Connectors and Soldering Lugs for Use with Copper Conductors.
   2. UL 506-89 – Specialty Transformers.

1.05 SUBMITTALS

A. Submit the following for Engineer's approval.

B. Product Data:
   1. Dimensional plans and sections.
   2. Elevations showing minimum clearances.
   3. Installed devices.
   4. Materials list.

5. Weights.
6. Wiring diagrams.
7. Manufacturer's nameplate data and electrical ratings.

C. Product Test Reports:
1. Certified copies of manufacturer's design and routine factory tests required by reference standards.
2. Submit after manufacture of transformer and before installation.

1.06 QUALITY ASSURANCE

A. Items provided under this section shall be listed or labeled by UL or other Nationally Recognized Testing Laboratory (NRTL).
1. Terms "NRTL" shall be as defined in OSHA Regulation 1910.7.
2. Terms "listed" and "labeled" shall be as defined in National Electrical Code, Article 100.

B. Regulatory Requirements:
1. National Electrical Code (NEC): Components and installation shall comply with National Fire Protection Association (NFPA) 70.

C. ANSI/IEEE Compliance: Comply with applicable requirements of ANSI/ IEEE standards, including ANSI/IEEE C2 and C57.12.80.

PART 2 PRODUCTS

2.01 MANUFACTURERS

A. Cutler Hammer

B. General Electric

C. Square D

2.02 TRANSFORMERS, GENERAL

A. Transformers:
1. Factory-assembled and tested, air-cooled units of types specified, having characteristics and ratings as indicated.
2. Design unit for 60 Hz service.

B. Cores: Grain-oriented, non-aging silicon steel.

C. Coils: Continuous windings without splices, except for taps.

D. Internal Coil Connections: Brazed or pressure type.

E. Bolt coil/core to bottom of enclosure for transformers larger than 15 kVA.
   1. Isolated by rubber, vibration-absorbing mounts.
   2. Metal-to-metal contact between coil/core and enclosure not allowed.

F. Provide copper windings.

G. Nameplates: Provide metal nameplate listing manufacturer's name, serial number, type, class, kVA voltage, frequency, and showing internal wiring diagram.

H. Sound Level: Minimum 3 dB less than sound levels for transformer type and size indicated when factory-tested in accordance with NEMA ST 20.

2.03 GENERAL PURPOSE, DRY TYPE TRANSFORMERS

A. Comply with NEMA ST 20.

B. Windings: 2-winding type. 3-phase transformers shall use 1 coil/ phase in primary and secondary.

C. Transformers shall have following features and ratings.
   1. Enclosure: Indoor, ventilated unless otherwise shown on Contract Drawings.
   2. Insulation Class: 185oC or 220oC class for transformers 15 kVA or smaller; 220oC class for transformers larger than 15 kVA.
   3. Insulation Temperature Rise: 80oC maximum rise above 40oC for 15 kVA and larger; 115oC maximum rise above 40oC below 15 kVA.
   4. Taps: For transformers 3 kVA and larger, full capacity taps in high voltage winding as follows.
      a. 3 through 10 kVA: Two 5% taps below rated high voltage.
      b. 15 through 500 kVA: Six 2-1/2% taps, 2 above and 4 below rated high voltage.
      c. 750 through 1,000 kVA: Four 2-1/2% taps, 2 above and 2 below rated high voltage.

D. Accessories: Following accessory items are required where shown on Contract Drawings.
   1. Surge Arresters: Low voltage type, factory-installed and connected to high voltage terminals; complying with NEMA LA 1.
   2. Wall Mounting Brackets: Manufacturer's standard brackets for transformers sized up to 75 kVA where wall mounting indicated.
   3. Electrostatic Shielding: Insulated metallic shield between primary and secondary windings. Connect to terminal marked "shield" for grounding connection, where applicable.

2.04 CONTROL AND SIGNAL TRANSFORMERS

A. Comply with NEMA ST 1 and UL 506.

B. Ratings:
   1. As indicated and for continuous duty.
   2. Where rating not indicated, provide 125% of load.

C. Type: Self-cooled, 2-winding dry type.

D. Enclosure: Indoor, except as indicated.

PART 3 EXECUTION

3.01 INSTALLATION

A. Arrange equipment to provide adequate spacing for cooling air circulation.

B. Tighten electrical connectors and terminals in accordance with manufacturer's published torque-tightening values. Where manufacturer's torque values not indicated, use those specified in UL 486A and 486B.

C. Install wall-mounted transformers on prefabricated brackets designed for purpose.

D. Install floor-mounted transformers on vibration pads on 3-1/2-inch concrete housekeeping pad.

E. Touch up scratched or marred surfaces to match original finish.

F. Identify transformers as specified herein.

3.02 FIELD QUALITY CONTROL

A. Test and permanently record as follows.
   1. Prior to energization of transformers, test phase-to-phase and phase-to-ground insulation resistance levels.
   2. Test transformers for continuity of circuits and short-circuits.

3.03 ADJUSTING

A. Adjust transformer taps to provide optimum voltage conditions at utilization equipment.

3.04 CLEANING

A. Upon completion of installation, inspect interiors and exteriors of accessible components.
   1. Remove paint splatters and other spots, dirt, and construction debris.
   2. Touch up scratches and mars of finish to match original.

3.05 PROTECTION

A. Temporary Heating: Comply with manufacturer's written recommendations within enclosure of each transformer throughout periods during which equipment is not in a space continuously under normal control of temperature and humidity.

END OF SECTION

SECTION 16475

OVERCURRENT PROTECTIVE DEVICES

PART 1 GENERAL

1.01 SUMMARY

A. Section Includes:
   1. Overcurrent protective devices (OCPDs) rated 600 V and below and switching devices commonly associated with OCPDs.

B. Circuit breakers installed in panelboards are specified in Section 16161 – Panelboards.

1.02 MEASUREMENT AND PAYMENT

A. No separate payment will be made for work performed under this Section.

1.03 RELATED SECTIONS

A. Specification 16195, Electrical Identification.

1.04 REFERENCES

A. National Electrical Manufacturers Association (NEMA).
   1. NEMA KS 1 83 - Enclosed Switches.
   2. NEMA 250 85 - Enclosures for Electrical Equipment (1000 Volts Maximum).
   3. NEMA FU1 86 - Low Voltage Cartridge Fuses.
   4. NEMA AB1 86 - Molded Case Circuit Breakers and Molded Case Switches.

B. National Fire Protection Association (NFPA):
   1. NFPA 70 90 - National Electrical Code (NEC).

C. Underwriters Laboratory (UL):
   1. UL 98 87 - Enclosed and Dead Front Switches.
   2. UL 198C 86 - High-Interrupting Capacity Fuses, Current-Limiting Types. Fifth Edition.
   3. UL 198E 88 - Class R Fuses. Fourth Edition.
   4. UL 486A 80 - Wire Connectors and Soldering Lugs for Use with Copper Conductors. Seventh Edition.
   5. UL 489 86 - Molded-Case Circuit Breakers and Circuit-Breaker Enclosures. Seventh Edition.
   6. UL 943 85 - Ground-Fault Circuit Interrupters. Second Edition.
   7. UL 977 84 - Fused Power-Circuit Devices. Third Edition.
   8. UL 198L 88 - UL Standard for Safety D C Fuses for Industrial Use.

1.05 DEFINITIONS

A. Overcurrent Protective Device (OCPD): Device operative on excessive current that causes and maintains interruption of power in circuit it protects.

B. Ampere-Squared-Seconds: Expression of available thermal energy resulting from current flow. With regard to current-limiting fuses and circuit breakers, ampere-squared-seconds during fault current interruption represents energy allowed to flow before fuse or breaker interrupts fault current within its current limiting range.

1.06 SUBMITTALS

A. Submit all products covered under this specification for Engineer's approval.

B. Shop Drawings:
Spare fuse cabinet showing dimensions and features including storage provision for fused cartons, where indicated to be provided in the project documents.

C. Product Data:
1. Product data for fuses, fusible switches, circuit breakers, and OCPD accessories specified in this Section, including descriptive data and time-current curves for protective devices and let through current curves for those with current limiting characteristics.
2. Include coordination charts and tables and related data.

D. Test Results:
1. Certified reports of field tests and observations.

1.07 QUALITY ASSURANCE

A. Items provided under this section shall be listed and labeled by UL or other Nationally Recognized Testing Laboratory (NRTL).
1. Term "NRTL" shall be as defined in OSHA Regulation 1910.7.
2. Terms "listed" and "labeled" shall be as defined in National Electrical Code, Article 100.

B. Regulatory Requirements:
1. Components and Installation:
a. NFPA 70 "National Electrical Code (NEC)."
b. Local codes and ordinances.

C. Single-Source Responsibility: Obtain similar OCPDs from single manufacturer.

D. Coordinate OCPD sizes with characteristics of motors supplied for this project. Pay special attention to high efficiency motors.

1.08 MAINTENANCE

A. Extra Materials:
   1. Maintenance Stock, Fuses: For types, voltage, and ampere ratings required, furnish 10% spare fuses, but not less than 1 set of 3 of each kind.

PART 2 PRODUCTS

2.01 OVERCURRENT PROTECTIVE DEVICES (OCPDS), GENERAL

A. General: Provide OCPDs in indicated types, as integral components of panelboards, switchboards, and motor control centers; and also as individually enclosed and mounted single units.

B. Enclosures: NEMA 250.

2.02 GENERAL FUSES

A. General: Provide fuses of types, classes, and current ratings as indicated. Voltage ratings shall be consistent with circuits on which used.

B. Fuses for Direct Current Circuits: UL 198L and marked for such use by manufacturer on fuse label.

C. Cartridge Fuse:
   1. Manufacturers:
      a. Bussmann Div., Cooper Industries, Inc.
      b. Gould Shawmut.
      c. Littelfuse Inc.
   2. NEMA Standard FU1, unless indicated otherwise, provide nonrenewable cartridge fuses of indicated types, classes, and current ratings that have voltage ratings consistent with circuits on which used.
   3. Class CC Fuses: UL 198C.
   4. Class J Fuses: UL 198C.
   5. Class L Fuses: UL 198C.
   6. Current limiting threshold of 10 times current rating or less and time delay of 4 sec at 5 times rating.
   7. Class RK1 and RK5 Dual Element Time-Delay Fuses: UL 198E.
   8. Class RK1 Fast-Acting Fuses: UL 198E.

2.03 FUSIBLE SWITCHES

A. Acceptable Manufacturers:
   1. Cutler Hammer
   2. General Electric
   3. Square D Co.

B. UL 98 and NEMA KS 1 quick-make, quick-break heavy-duty units.

C. Rating: Load-breaking capacity in excess of normal horsepower rating for switch.

D. Withstand Capability: In excess of let through current permitted by its fuse when subject to faults up to 100,000 RMS symmetrical amperes.

E. Operation: By means of external handle.

F. Interlock: Prevents access to switch interior except when in "off" position.

G. Fuse Clips: Rejection type.

H. Padlocking Provisions: For 2 padlocks, whether open or closed.

I. Enclosure for Switchboard or Panelboard Mounting: Suitable for panel mounting where indicated.

J. Enclosure for Switchboard Mounting: Provide individual mounting where indicated.

K. Enclosure for Independent Mounting: NEMA type as indicated or required to suit environment where located.

2.04 MOLDED-CASE CIRCUIT BREAKERS

A. Acceptable Manufacturers:
   1. Cutler Hammer
   2. General Electric
   3. Square D Co.

B. UL 489 and NEMA AB 1.

C. Construction: Bolt in type, except breakers in load-center-type panelboards and breakers 225 ampere frame size and larger may be plug in type if held in place by positive locking device requiring mechanical release for removal.

D. Characteristics: Indicated frame size, trip rating, number of poles, and short-circuit interrupting capacity rating of 10,000 amperes symmetrical, unless greater rating is indicated on Drawings.

E. Tripping Device: Quick-make, quick-break toggle mechanism with inverse-time delay and instantaneous overcurrent trip protection for each pole.

F. Adjustable Instantaneous Trip Devices: Factory adjusted to low-trip-setting current values.

G. Enclosure for Switchboard or Panelboard Mounting: Suitable for panel mounting in switchboard or panelboards where indicated.

H. Enclosure for Switchboard or Motor Control Center Mounting: Provide individual mounting where indicated.

I. Enclosure for Independent Mounting: NEMA type enclosure, as indicated or required to suit environment where located.

2.05 INSULATED-CASE CIRCUIT BREAKERS

A. Acceptable Manufacturers:
   1. Cutler Hammer
   2. General Electric
   3. Siemens Energy and Automation
   4. Square D Co.

B. UL 489 and NEMA AB 1.

C. Ratings: Continuous-current, interrupting, and short-time-current ratings, and voltage and frequency ratings as indicated.

D. Operating Mechanism: Mechanically and electrically trip-free, stored-energy operating mechanism with following features:
   1. Moving Contacts Closing Speed: Independent of both control and operator.

E. Circuit-Breaker Features and Accessories: Include following:
   1. Operating Handle: Provide 1 for each manually operated breaker. No handle ties are permitted.

PART 3 PART 3: EXECUTION

3.01 INSTALLATION

A. Fuses:
   1. Install fuses in fusible devices indicated.

B. Independently Mounted OCPDs:
   2. Locate as indicated and install in accordance with manufacturer's written installation instructions.

C. Factory install OCPDs furnished in distribution equipment.

D. Coordinate size overcurrent protective devices with each motor and equipment manufacturer to assure correct size devices and provide accordingly.

3.02 APPLICATION OF FUSES

A. Control Circuits: Class CC, time delay.

B. General Purpose Fusible Switches: Apply following class and types:
   1. 30 600 Amperes: Class J or RK1, time delay.

C. Combination Starters: Class J or RK1, time delay.

3.03 IDENTIFICATION

A. Identify with components as specified in Section 16195.

3.04 CONTROL WIRING INSTALLATION

A. Install wiring between OCPDs and control/indication devices as specified in Section 16120 for hard wired connections.

3.05 CONNECTIONS

A. Check connectors, terminals, bus joints, and mountings for tightness.

B. Tighten field-connected connectors and terminals, including screws and bolts, in accordance with equipment manufacturer's published torque tightening values. Where manufacturer's torquing requirements are not indicated, tighten connectors and terminals to comply with tightening torques specified in UL 486A and UL 486B.

3.06 GROUNDING

A. Provide equipment grounding connections for individually mounted OCPD units as indicated and as required by NEC. Tighten connectors to comply with tightening torques specified in UL Standard 486A to assure permanent and effective grounding.

B. Ground in accordance with Section 16170.

3.07 FIELD QUALITY CONTROL

A. Manufacturer's Field Services:
   1. Supplier's or manufacturer's technician for equipment specified herein shall be present at job site or classroom designated by Owner for minimum of ½ workday, travel time excluded, for assistance during plant construction, plant startup, equipment adjustment, and training of Owner’s personnel for plant operation. Include minimum of:
      a. 1/2 manday for Instructional Services.
      b. Supplier or manufacturer shall direct services to specific system and equipment operation, maintenance, and troubleshooting.

B. Testing:
   1. Reports: Prepare certified written reports on tests and observations. Report defective materials and workmanship and unsatisfactory test results.
   2. Pretesting: Upon completing installation of system, perform following preparations for tests:
      a. Make insulation resistance tests of OCPD buses, components, and connecting supply, feeder, and control circuits.
      b. Make continuity tests of circuits.
      c. Include full updating on final system configuration and parameters where they supplement or differ from those indicated in original Contract Documents.

d. Comply with manufacturer's instructions for installation and testing of OCPDs.

3. Visual and mechanical inspection: Include following inspections and related work.
   a. Overcurrent-Protective-Device Ratings and Settings: Verify indicated ratings and settings to be appropriate for final system arrangement and parameters. Where discrepancies are found, test organization shall recommend final protective device ratings and settings. Use accepted revised ratings or settings to make final system adjustments.
   b. Inspect for defects and physical damage, NRTL labeling, and nameplate compliance with current single line diagram.
   c.
   d. Exercise and perform operational tests of mechanical components and other operable devices in accordance with manufacturer's instruction manual.
   e. Check tightness of electrical connections of OCPDs with calibrated torque wrench. Refer to manufacturer's instructions for proper torque values.
   f. Clean OCPDs using manufacturer's approved methods and materials.
   g. Verify installation of proper fuse types and ratings in fusible OCPDs.

3.08 CLEANING

A. Upon completion of installation, inspect OCPDs. Remove paint splatters and other spots, dirt, and debris. Touch up scratches and mars of finish to match original finish.

END OF SECTION

SECTION 16476

DISCONNECTS AND CIRCUIT BREAKERS

PART 1 GENERAL

1.01 SUMMARY

A. Section Includes:
   1. Service disconnects.
   2. Feeder and equipment disconnects.
   3. Enclosed circuit breakers.

1.02 MEASUREMENT AND PAYMENT

A. No separate payment will be made for work performed under this Section.

1.03 RELATED SECTIONS

A. Specification 16195, Electrical Identification.

1.04 SUBMITTALS

A. Submit the following for Engineer’s approval.

B. Product Data:
   1. Submit for switches, circuit breakers, and accessories.
   2. Descriptive data and time current curves for protective devices and let through current curves for those devices with current limiting characteristics. Include coordination charts and tables, and related data.

C. Shop Drawings:
   1. Wiring diagrams detailing power and control wiring and differentiating clearly between manufacturer installed wiring and field installed wiring.

D. Test Results:
   1. Field test reports indicating and interpreting test results.

E. Operating and Maintenance Data:
   1. Maintenance data for tripping devices.

1.05 QUALITY ASSURANCE

A. Items provided under this section shall be listed or labeled by UL or other Nationally Recognized Testing Laboratory (NRTL).
   1. Term "NRTL" shall be as defined in OSHA Regulation 1910.7.
   2. Terms "listed" and "labeled" shall be as defined in National Electrical Code, Article 100.

B. Regulatory Requirements:
   1. National Electrical Code (NEC): Components and installation shall comply with National Fire Protection Association (NFPA) 70.

C. Single Source Responsibility: Enclosed switches and circuit breakers shall be product of a single manufacturer.

PART 2 PRODUCTS

2.01 MANUFACTURERS

A. Fusible Switches:
   1. Cutler Hammer
   2. General Electric
   3. Square D

B. Molded Case Circuit Breakers:
   1. Cutler Hammer
   2. General Electric.

C. Square D

2.02 ENCLOSED SWITCHES

A. Enclosed Non-fusible Switch: NEMA KS 1, Type HD handle lockable with 2 padlocks.

B. Enclosed Fusible Switch, 800 Amperes and Smaller: NEMA KS 1, Type HD, clips to accommodate specified fuses, enclosure consistent with environment where located, handle lockable with 2 padlocks, and interlocked with cover in CLOSED position.

2.03 ENCLOSED CIRCUIT BREAKERS

A. Enclosed Molded Case Circuit Breaker: NEMA AB 1, handle lockable with 2 padlocks.

B. Characteristics:
   1. Frame size, trip rating, number of poles, and auxiliary devices as indicated
   2. Interrupting capacity rating to meet available fault current, 10,000 symmetrical rms amperes minimum
   3. Appropriate application listing when used for switching fluorescent lighting loads or heating, air conditioning, and refrigeration equipment.

PART 3 EXECUTION

3.01 INSTALLATION

A. Install enclosed switches and circuit breakers in locations as indicated, according to manufacturer's written instructions.

B. Install enclosed switches and circuit breakers level and plumb.

C. Install wiring between enclosed switches and circuit breakers and control/indication devices.

D. Connect enclosed switches and circuit breakers and components to wiring system and to ground as indicated and instructed by manufacturer. Tighten connectors and terminals, including screws and bolts according to equipment manufacturer's published torque tightening values for equipment connectors. Where manufacturer's torquing requirements are not indicated, tighten connectors and terminals according to tightening torques specified in UL Standard 486A.

3.02 FIELD QUALITY CONTROL

A. Manufacturer’s Field Services:
   1. Supplier’s or manufacturer’s representative for equipment specified herein shall be present at job site or for assistance during plant construction, plant startup, and training of Owner’s personnel for plant operation.

B. Testing: After installing enclosed switches and circuit breakers and after electrical circuitry has been energized, demonstrate product capability and compliance with requirements.
   1. Procedures: Perform each visual and mechanical inspection and electrical test stated in NETA Standard ATS, Section 7.5 for enclosed switches and Section 7.6 for molded case circuit breakers. Certify compliance with test parameters.
   2. Correct malfunctioning units at site, where possible, and retest to demonstrate compliance; otherwise, remove and replace with new units, and retest.

C. Training:
   1. Train Owner’s maintenance personnel on procedures and schedules for startup and shutdown, troubleshooting, servicing, and preventive maintenance.
   2. Review operating and maintenance data.

3.03 ADJUSTING

A. Set field adjustable enclosed switches and circuit breaker trip ranges as indicated.

3.04 CLEANING

A. After completing system installation, including outlet fittings and devices, inspect exposed finish. Remove burrs, dirt, and construction debris and repair damaged finish including chips, scratches, and abrasions.

END OF SECTION