CITY OF HOUSTON
DEPARTMENT OF PUBLIC WORKS AND ENGINEERING
ENGINEERING and CONSTRUCTION DIVISION

PROJECT MANUAL

New/Replacement of Water Well – Forest Cove III
WBS No. S-000100-0016-4

VOLUME 1 of 1

Divisions 00 through 16

December 2015

STATE OF TEXAS
JAY M. CHAPMAN
93029
LICENSED
PROFESSIONAL ENGINEER

31 DEC 2015

STATE OF TEXAS
CHAL SHRADER
40269
REGISTERED
PROFESSIONAL ENGINEER

December 30, 2015
Shrader Engineering Inc.
TBPE No. F-527

AEI Engineering
616 Cypress Creek Pkwy (FM 1960 W)
Suite 250
Houston, Texas, 77090
281-350-7027
TBPE No. F-1697

ELECTRICAL ONLY
Shrader Engineering Inc.
800 Town and Country Blvd
Suite 430
Houston, Texas 77024
713-467-9961
TBPE No. F-527

Document 00010

TABLE OF CONTENTS

NOTE: Bold capitalized Specification Sections are included in the City of Houston Department of Public Works and Engineering Standard Construction Specifications for Wastewater Collection Systems, Water Lines, Storm Drainage, Street Paving, and Traffic located here: http://edocs.publicworks.houstontx.gov/engineering-and-construction/specifications.html; and are incorporated in Project Manuals by reference as if copied verbatim. Documents listed "for filing" are to be provided by Bidder and are not included in this Project Manual unless indicated for example only. The Document numbers and titles hold places for actual documents to be submitted by Contractor during Bid, post-bid, or construction phase of the Project. Specification Sections marked with an asterisk (*) are amended by a supplemental specification, printed on blue paper and placed in front of the Specification it amends. Documents in the 200, 300 and 400 series of Division 00, except for Document 00410B – Bid Form, Part B, are not part of the Contract.

Doc. No.	DocumentTitle	Doc. Date
	INTRODUCTORY INFORMATION	
00010	Table of Contents	12-30-2015
00015	List of Drawings	05-14-2015
	BIDDING REQUIREMENTS	
	INSTRUCTIONS TO BIDDERS	
00200	Instructions to Bidders	08-01-2015
00210	Supplementary Instructions to Bidders	08-01-2015
00220	Request for Bid Information	06-11-2004
	INFORMATION AVAILABLE TO BIDDERS	
00320	Geotechnical Information	09-02-2005
00340	Environmental Information	09-14-2005
	BID FORMS AND SUPPLEMENTS	
00410	Bid Form, Parts A & B	10-21-2015
00430	Bidder's Bond (For filing; Example Form)	02-01-2004
00450	Bidder's Statement of MWBE/PDBE/DBE/SBE Status	07-01-2013
00452	Contractor Submission List - Fair Campaign Ordinance	04-30-2004
00453	Bidder's Statement of Residency	02-01-2004
00454	Affidavit of Non-interest	02-01-2004
00455	Affidavit of Ownership or Control	09-04-2007
00457	Conflict of Interest Questionnaire	02-28-2006
00460	(POP-1) Pay or Play Acknowledgement Form	07-03-2012
00470	Bidder's MWSBE Participation Plan	08-01-2015
00471	Pre-bid Good Faith Efforts	08-01-2015

Doc. No.	DocumentTitle	Doc. Date
00472	Bidder's Goal Deviation Request	08-01-2015
POST-BID PROCEDURES		
00495	Post-bid Procedures	08-01-2013

CONTRACTING REQUIREMENTS

AGREEMENT		
00501	Resolution of Contractor	02-01-2010
00520	Agreement	07-01-2013
00570	Contractor's Revised MWSBE Participation Plan	08-01-2013
00571	Record of Post-Award Good Faith Efforts	08-01-2013
00572	Contractor's Request for Plan Deviation	08-01-2013
BONDS AND CERTIFICATES		
00600	List of Proposed Subcontractors and Suppliers	07-01-2013
00601	Drug Policy Compliance Agreement	02-01-2004
00602	Contractor's Drug Free Workplace Policy (For filing)	
00604	History of OSHA Actions and List of On-the-job Injuries	02-01-2004
00605	List of Safety Impact Positions	02-01-2004
00606	Contractor's Certification of No Safety Impact Positions	02-01-2004
00610	Performance Bond	05-17-2005
00611	Statutory Payment Bond	05-17-2005
00612	One-year Maintenance Bond	05-17-2005
00620	Affidavit of Insurance (with attached Certificates of Insurance)	02-01-2004
00622	Name and Qualifications of Proposed Superintendent (For filing)	
00624	Affidavit of Compliance with Affirmative Action Program	02-01-2004
00630	(POP-2) Certification of Compliance with Pay or Play Program	07-03-2012
00631	(POP-3) City of Houston Pay or Play Program – List of Subcontractors	07-03-2012
00642	Monthly Subcontractor Payment Reporting Form	02-01-2010
00646	Payment Notification Explanation of Withholding	02-01-2010
GENERAL CONDITIONS		
00700	General Conditions	08-15-2015
SUPPLEMENTARY CONDITIONS		
00800	Supplementary Conditions	12-30-2015
00805	Equal Employment Opportunity Program Requirements	05-01-2012
00808	Requirements for the City of Houston Program for Minority, Women, and Small Business Enterprises (MWSBE), and	

Doc. No.	DocumentTitle	Doc. Date
	Persons with Disabilities Business Enterprises (PDBE) Program	12-23-2015
00820	Wage Scale for Engineering Construction	02-01-2014
00840	Pay or Play Program Requirements	07-03-2012
ADDENDA AND MODIFICATIONS		
00931	Request for Information	02-01-2004

SPECIFICATIONS

DIVISION 1 - GENERAL REQUIREMENTS

01110	Summary of Work	11-11-2015
01145	Use of Premises	01-01-2011
01255	Change Order Procedures	08-01-2003
01270S	*Measurement and Payment*	*09-28-2015*
*01270	Measurement and Payment	08-01-2003
01292	Schedule of Values	08-01-2003
01312	Coordination and Meetings	08-01-2003
01321	Construction Photographs	08-01-2003
01326	Construction Schedule (Bar Chart)	08-01-2003
01330	Submittal Procedures	08-01-2003
01340	Shop Drawings, Product Data, and Samples	08-01-2003
01351	Environmental Safety and Worker Protection	01-01-2011
01410	TPDES Requirements (with Attachments)	02-01-2011
01422	Reference Standards	08-01-2003
01450	Contractor's Quality Control	08-01-2003
01452	Inspection Services	08-01-2003
01454	Testing Laboratory Services	08-01-2003
01502S	*Mobilization*	*08-25-2015*
*01502	Mobilization	08-01-2008
01504	Temporary Facilities and Controls	01-01-2011
01520	Temporary Field Office	02-08-2012
01555	Traffic Control and Regulation	01-01-2011
01570	Storm Water Pollution Control	01-26-2012
01575	Stabilized Construction Access	02-01-2011
01576	Waste Material Disposal	08-01-2003
01578	Control of Ground and Surface Water	01-01-2011
01580	Project Identification Signs	08-01-2003
01610	Basic Product Requirements	01-01-2011
01630	Product Substitution Procedures	08-01-2003
01725	Field Surveying	01-01-2011
01731	Cutting and Patching	01-01-2011

Doc. No.	DocumentTitle	Doc. Date
01732	Procedure for Water Valve Assistance (with Attachments)	08-01-2003
01740	Site Restoration	08-01-2003
01755	Starting Systems	08-01-2003
01770	Closeout Procedures	08-01-2003
01782S	*Operations and Maintenance Data*	*08-25-2015*
*01782	Operations and Maintenance Data	08-01-2003
01785S	*Project Record Documents*	*08-25-2015*
*01785	Project Record Documents	08-01-2003
DIVISION 2 - SITE WORK		
02081	**CAST-IN-PLACE CONCRETE MANHOLES**	**01-01-2011**
02084	**FRAMES, GRATES, RINGS AND COVERS**	**12-01-2014**
02085	**VALVE BOXES, METER BOXES AND METER VAULTS**	**01-01-2011**
02087	**BRICK MANHOLE FOR STORM SEWERS**	**10-01-2002**
02136	**WASTE MATERIAL HANDLING, TESTING AND DISPOSAL**	**01-01-2011**
02221S	*Removing Existing Pavement and Structures*	*10-24-2012*
*02221	Removing Existing Pavements and Structures	07-01-2009
02233	**CLEARING AND GRUBBING**	**01-01-2011**
02260	**TRENCH SAFETY SYSTEM**	**02-01-2011**
02316	**EXCAVATION AND BACKFILL FOR STRUCTURES**	**01-01-2011**
02317	**EXCAVATION AND BACKFILL FOR UTILITIES**	**01-01-2011**
02319	**BORROW**	**01-01-2011**
02320	**UTILITY BACKFILL MATERIALS**	**01-01-2011**
02321	**CEMENT STABILIZED SAND**	**01-01-2011**
02501	**DUCTILE IRON PIPE AND FITTINGS**	**02-01-2011**
02502	**STEEL PIPE AND FITTINGS**	**01-01-2011**
02506	**POLYVINYL CHLORIDE PIPE**	**01-01-2011**
02511S	*Water Lines*	*10-21-2013*
*02511	Water Lines	01-01-2011
02514	**DISINFECTION OF WATER LINES**	**01-01-2011**
02515	**HYDROSTATIC TESTING OF PIPELINES**	**01-01-2011**
02521	**GATE VALVES**	**01-01-2011**
02524	**AIR RELEASE AND VACUUM RELIEF VALVES**	**01-01-2011**
02528	**POLYETHYLENE WRAP**	**01-01-2011**
02529	Water Wells	10-16-2015
02536	Discharge Piping and Appurtenances	11-11-2015
02611	**REINFORCED CONCRETE PIPE**	**12-01-2014**
02621	**GEOTEXTILE**	**10-01-2002**
02631	**STORM SEWERS**	**12-01-2014**
02632	**CAST-IN-PLACE INLETS, HEADWALLS AND WINGWALLS**	**10-01-2002**
02662	**PIPING, VALVES, FITTINGS AND ACCESSORIES FOR**	

Doc. No.	DocumentTitle	Doc. Date
	WATER STORAGE TANKS	**01-01-2011**
02730	Porous Flexible Paving	05-22-2015
02821	Chain Link Fences and Gates	08-27-2015
02911S	*Topsoil*	*08-25-2015*
*02911	Topsoil	10-01-2002
02921	**HYDRO MULCH SEEDING**	**01-01-2011**
02922	**SODDING**	**07-01-2009**
DIVISION 3 - CONCRETE		
03315	**CONCRETE FOR UTILITY CONSTRUCTION**	**10-01-2002**
DIVISION 4 - MORTAR		
04061	**MORTAR**	**10-01-2002**
04210	**BRICK MASONRY FOR UTILITY CONSTRUCTION**	**10-01-2002**
DIVISION 9 - FINISHES		
09971	Painting and Protective Coatings for Potable Water Storage Tanks	01-01-2011
DIVISION 13 – SPECIAL CONSTRUCTION		
13203	Tank Clean-Up and Disinfection	01-01-2011
DIVISION 15 – MECHANICAL		
15162	Lineshaft Deep Well Pumps	10-21-2015
15170	Low Voltage Motors	04-14-2015
DIVISION 16 – ELECTRICAL		
16012	Electrical Work	08-27-2015
16060	Electrical Demolition	08-27-2015
16111	Conduit, Fittings and Bodies	08-27-2015
16120	600-Volt Control Cable	08-27-2015
16126	Instrumentation Cable	08-27-2015
16131	Device, Pull and Junction Boxes	08-27-2015
16160	Cabinets and Enclosures	08-27-2015
16161	Panelboards	08-27-2015
16170	Grounding and Bonding	08-27-2015
16195	Electrical Identification	08-27-2015
16290	Low Voltage Surge Protection Device	08-27-2015
16402	Underground Duct Banks	08-27-2015
16410	Low Voltage Power Factor Correction Capacitors	08-27-2015
16461	Dry-Type Transformers	08-27-2015

Doc. No.	DocumentTitle	Doc. Date
16476	Disconnects and Circuit Breakers	08-27-2015
16480	Motor Control Center	08-27-2015
16484	Electronic Soft-Start Controllers	08-27-2015
16662	Motor Management Relay	08-27-2015
16936	Pilot and Miscellaneous Control Devices	08-27-2015
16990	Facilities for CenterPoint Energy's Use	08-27-2015

END OF DOCUMENT

Document 00015

LIST OF DRAWINGS

Sheet No.	Drawing Title
1.	Cover Sheet
2.	Notes and Legend
3.	Survey Control Map
4.	Existing Yard Layout
5.	Proposed Yard Layout
6.	Surface Drainage & Grading
7.	Well Design & Discharge Manifold
8.	Well Discharge Manifold Details
9.	Ground Storage Tank Connection
10.	Miscellaneous Details Sheet 1
11.	Miscellaneous Details Sheet 2
12.	Storm Sewer Plan & Profile
13.	Project Sign
14.	Stormwater Pollution Prevention Plan
15.	Stormwater Pollution Prevention Plan Details
16.	Structural Well Foundation Plan and Sections
17.	Electrical Legends
18.	Electrical Abbreviations and Notes
19.	Electrical Site Plan
20.	Electrical Enlarged Site Plan
21.	Electrical One-Line Diagram
22.	Electrical Control Diagrams Sheet 1
23.	Electrical Control Diagrams Sheet 2
24.	Electrical Details
25.	Electrical Well Details
26.	Electrical Schedules

END OF DOCUMENT

Document 00200

TABLE OF CONTENTS

INSTRUCTIONS TO BIDDERS

PARA	TITLE	PAGE
1.0	*RELATED DOCUMENTS*	3
2.0	*DEFINITIONS*	3
3.0	*NOTICE TO BIDDERS*	3
4.0	*BID DOCUMENTS*	4
5.0	*EXAMINATION OF DOCUMENTS, SITE, AND LOCAL CONDITIONS*	4
6.0	*INTERPRETATIONS DURING BIDDING*	4
7.0	*ADDENDA*	4
8.0	*SUBSTITUTION OF PRODUCTS*	5
9.0	*PREPARATION OF BIDS*	5
10.0	*BID SUBMISSION*	5
11.0	*BID SECURITY*	5
12.0	*SUBCONTRACTORS AND SUPPLIERS*	6
13.0	*MODIFICATION OR WITHDRAWAL OF BID*	6
14.0	*BID DISQUALIFICATION*	6
15.0	*PREBID MEETING*	6
16.0	*OPENING OF BIDS*	6
17.0	*EVALUATION AND CONSIDERATION OF BIDS*	6
18.0	*ACCEPTANCE OF THE BID*	6

Document 00200

INSTRUCTIONS TO BIDDERS

1.0 *RELATED DOCUMENTS*

A. Document 00210 – Supplementary Instructions to Bidders.

B. Document 00320 – Geotechnical Information.

C. Document 00330 – Existing Conditions.

D. Document 00410 – Bid Form, Parts A & B.

E. Document 00495 – Post-Bid Procedures.

F. Document 00520 – Agreement.

G. Document 00700 – General Conditions.

H. Document 00800 – Supplementary Conditions.

2.0 *DEFINITIONS*

A. Definitions set forth in Document 00700 – General Conditions and in other documents of Project Manual, are applicable to Bid Documents.

B. *Addendum:* Written or graphic instrument issued prior to Bid opening, which clarifies, modifies, corrects, or changes Bid Documents.

C. *Alternate:* The total amount bid for additions to work, as described in Section 01110 – Summary of Work. Each Alternate includes cost of effects on adjacent or related components, and Bidder's overhead and profit.

D. *Bid:* A complete and properly signed offer to perform the Work in accordance with this Document and Document 00210 – Supplementary Instructions to Bidders.

E. *Bid Date:* Date and time set for receipt of Bids as stated in Document 00210 – Supplementary Instructions to Bidders, or as modified by Addenda.

F. *Bid Documents:* Project Manual, Drawings, and Addenda.

G. *Bid Supplement: A* Bid submittal that is required in Document 00410 – Bid Form.

H. *Bidder:* Person or firm, identified in Document 00410B – Bid Form – Part B, including its successors, and its authorized representative.

I. *Code:* Code of Ordinances, Houston, Texas.

J. *Low Bidder:* Apparent successful Bidder that qualifies as a responsible Bidder and that submits Bid with lowest Total Bid Price.

K. *Project Manager:* Person designated in Document 00100 – Advertisement for Bids and Document 00220 – Request for Bid Information to represent the City during bidding and post-bid periods.

L. *Project Manual:* Volume assembled for the Work that includes the bidding requirements, sample forms, Conditions of the Contract, and Specifications.

M. *Security Deposit:* A certified check, cashier's check, or bid bond in the amount of 10 percent of the Total Bid Price.

N. *Total Bid Price:* Total amount bid for performing the Work as identified by Bidder in Document 00410B – Bid Form – Part B, which amount includes:

1. Stipulated Price;
2. Total Base Unit Prices;
3. Total Extra Unit Prices;
4. Total Cash Allowances; and
5. Total Alternates.

3.0 *NOTICE TO BIDDERS*

A. The City of Houston Fair Campaign Ordinance makes it unlawful for a Contractor to offer any contribution to a candidate for City elective office (including elected officers and officers-elect) during a certain period of time prior to and following the award of the Contract by the City Council. The term "Contractor" includes proprietors of proprietorships, all partners of partnerships, and all officers, directors, and holders of 10 percent or more of the outstanding shares of corporations. A statement disclosing the names and business addresses of each of those persons will be required to be submitted with each bid or proposal; for a City Contract. Bidder shall complete and submit Document 00452 – Form A, Contractor Submission List, City of Houston Fair Campaign Ordinance, with its Bid to comply with this requirement. See Chapter 18 of the Code for further information.

B. Chapter 15, Article VIII, of the City's Code provides that no contract shall be let, nor any other business transaction entered into, by the City with any person indebted to the City or a qualifying entity, if the contractor or transaction comes within the provisions of Section 15-1 (c) of the Code. Exceptions are provided in Section 15-126 of the Code. Bidder shall complete and submit Document 00455 – Affidavit of Ownership or Control, with its Bid to comply with this requirement.

C. Neither bidder(s) nor any person acting on bidder(s)'s behalf shall attempt to influence the outcome of the award by the offer, presentation or promise of gratuities, favors, or anything of value to any appointed or elected official or employee of the City of Houston, their families or staff members. All inquiries regarding the solicitation are to be directed to the designated City Representative identified on the first page of the solicitation. Upon issuance of the solicitation through the pre-award phase and up to the date the City Secretary publicly posts notice of any City Council agenda containing the applicable award, aside from bidder's formal response to the solicitation, through the pre-award phase, written requests for clarification during the period officially designated for such purpose by the City Representative, neither bidder(s) nor persons acting on their behalf shall communicate with any appointed or elected official or employee of the City of Houston, their families or staff through written or oral means in an attempt to persuade or influence the outcome of the award or to obtain or deliver information intended to or which could reasonably result in an advantage to any bidder. However, nothing in this paragraph shall prevent a bidder from making public statements to the City Council convened for a regularly scheduled session after the official selection has been made and placed on the City Council agenda for action, or to a City Council committee convened to discuss a recommendation regarding the solicitation.

4.0 *BID DOCUMENTS*

A. The Bid Documents may be obtained at location specified in Document 00210 – Supplementary Instructions to Bidders.

B. The Bid Documents are made available only for the purpose of bidding on the Work. Receipt of Bid Documents does not grant a license for other purposes.

C. On receipt of Bid Documents, Bidder shall verify that documents are legible and complete, compare contents of Project Manual with Document 00010 – Table of Contents, and compare Index of Drawings with Document 00015 – List of Drawings. Bidder shall notify Project Manager if Bid Documents are incomplete.

D. If City of Houston Standard Specifications or Standard Details are required by the Project Manual, Bidder shall refer to Document 00210 – Supplementary Instructions to Bidders for purchase information.

5.0 *EXAMINATION OF DOCUMENTS, SITE, AND LOCAL CONDITIONS*

A. Bidder shall examine Project site, become familiar with local conditions under which the Work shall be performed, conduct appropriate investigations, and correlate personal observations with requirements of the Bid Documents before submitting a Bid.

B. Bidder shall make site investigations to the extent Bidder deems necessary to ascertain extent of subsurface conditions.

C. Failure of Bidder to perform the investigations prior to submitting a Bid does not relieve Bidder of responsibility for investigations, interpretations and proper use of available information in the preparation of its Bid.

D. Bidder shall observe limitations of access to occupied or restricted site as stated in Document 00210 – Supplementary Instructions to Bidders.

6.0 *INTERPRETATIONS DURING BIDDING*

A. Bidder shall immediately submit Document 00220 – Request for Bid Information to Project Manager upon finding errors, discrepancies, or omissions in Bid Documents. Confirmation of receipt of questions by the City is the responsibility of Bidder. Verbal discussions and answers are not binding.

B. Document 00220 – Request for Bid Information must be received at least 10 days before the Bid Date to allow issuance of Addenda in accordance with Paragraph 7.O.D. Replies, if issued, are by Addenda.

7.0 *ADDENDA*

A. Addenda that affect bidding requirements are applicable only during applicable only through issuance of the Notice to Proceed. Addenda that affect the Contract are a part of the Contract.

B. BIDDERS WHO SUBMIT A BID ON THIS PROJECT SHALL BE PRESUMED TO HAVE RECEIVED ALL ADDENDA AND TO HAVE INCLUDED ANY COST THEREOF IN THEIR BIDS, REGARDLESS OF WHETHER THEY ACKNOWLEDGE THE ADDENDA OR NOT.

C. The City will make Addenda available at same location where the Bid Documents may be obtained. The City will notify plan holders of record when Addenda are available. Bidders are responsible for obtaining Addenda after notification.

D. No Addendum will be issued later than noon on Monday before Bid Date, except Addenda with minor clarifications, withdrawing request for Bids, or postponing Bid Date.

8.0 *SUBSTITUTION OF PRODUCTS*

A. No substitutions of Products will be considered during the bidding period.

9.0 *PREPARATION OF BIDS*

A. Bidder shall fill in applicable blanks in Document 00410A&B – Bid Form – Parts A & B and Bid Supplements. In addition, Bidder shall bid all Alternates. Bidder shall properly sign Document 00410B -Bid Form.

B. Bidder shall initial all pages, except signature page, of Document 00410B – Bid Form – Part B.

C. Bidder is responsible for all costs incurred by the Bidder, associated with preparation of its Bid and compliance with Post-bid Procedures.

D. Bidder may not adjust preprinted price on line items stating "Fixed Unit Price" in the description on the Bid Form.

E. Bidder may increase, but not decrease, preprinted price on line items stating "Minimum Bid Price" in the description on the Bid Form by crossing out the minimum and inserting revised price on the line above. Bidder **may not** decrease the preprinted price on line items stating "Minimum Bid Price".

F. Bidder may decrease, but not increase, preprinted price on line items stating "Maximum Bid Price" in the description on the Bid Form by crossing out the maximum and inserting revised price on the line above. Bidder **may not** increase the preprinted price on line items stating "Maximum Bid Price".

G. Bidder shall insert a price no greater than the maximum preprinted range and no less than the preprinted range for line items stating "Fixed Range Unit Price" in the description on the Bid Form by crossing out prices noted and inserting revised price on the line above.

H. Bidder may not adjust Cash Allowance amounts.

10.0 *BID SUBMISSION*

A. City Secretary will receive Bids on Bid Date at location specified in Document 00210 – Supplementary Instructions to Bidders.

B. Bids submitted after Bid Date will be returned to Bidder unopened.

C. Verbal, facsimile, or electronic Bids are invalid and will not be considered.

D. Bidder shall submit in person or by mail one copy of the signed Document 00410 – Bid Form, Parts A and B, along with required Security Deposit, and required Bid Supplements, in a sealed, opaque envelope. In addition, Bidder shall clearly identify Project, Bid Date and Bidder's name on outside of envelope. If forwarded by mail, the sealed envelope containing the Bid must be enclosed in another envelope addressed for postal delivery.

11.0 *BID SECURITY*

A. Bidder shall submit a Security Deposit with its Bid.

B. Certified Check or Cashier's Check

1. Bidder shall make check payable to the City of Houston.

2. A check is submitted on the condition that if Bidder is named Low Bidder and fails either to timely and properly submit documents required in Document 00495 – Post-Bid Procedures, the City will cash the check in accordance with Paragraph 11.0.E.

C. Bid Bond

1. The bid bond must be a valid and enforceable bond, signed by a surety that complies with other requirements set out by law.

2. The bid bond must name the City of Houston as obligee, and be signed by the Bidder as principal and signed and sealed by the surety.

3. The bid bond must be conditioned such that if Bidder is named Low Bidder and then fails to timely and properly submit documents required in Document 00495 – Post-Bid Procedures, surety will be obligated to pay to the City an amount in accordance with Paragraph 11.0.E.

D. Security Deposits will be retained until after the Contract is awarded or all Bids are rejected.

E. Low Bidder forfeits Security Deposit if it fails to timely and properly submit documents required in Document 00495 – Post-Bid Procedures. The City may claim an amount equal to the difference between the Total Bid Price of the defaulting Bidder and the Total Bid Price of the Bidder awarded the Contract. If Security Deposit is a check, the City will reimburse any remaining balance to the defaulting Bidder.

12.0 *SUBCONTRACTORS AND SUPPLIERS*

A. The City may reject proposed Subcontractors or Suppliers.

B. Refer to Document 00800 – Supplementary Conditions, for MWBEPDBE, DBE and SBE goals.

13.0 *MODIFICATION OR WITHDRAWAL OF BID*

A. A Bidder may modify or withdraw a Bid submitted before the Bid Date by written notice to the City Secretary. The notice may not reveal the amount of the original Bid and must be signed by the Bidder.

B. Bidder may not modify or withdraw its Bid by verbal, facsimile, or electronic means.

C. A withdrawn Bid may be resubmitted up to the time designated for receipt of Bids.

14.0 *BID DISQUALIFICATION*

A. The City may disqualify a Bid if the Bidder:

1. fails to provide required Security Deposit in the proper amount;
2. improperly or illegibly completes information required by the Bid Documents;
3. fails to sign Bid or improperly signs Bid;
4. qualifies its Bid; or
5. improperly submits its Bid.

B. When requested, Low Bidder shall present satisfactory evidence that Bidder has regularly engaged in performing construction work as proposed, and has the capital, labor, equipment, and material to perform the Work.

15.0 *PREBID MEETING*

A. A prebid meeting is scheduled to be held at the place, time, and date listed in Document 00210 – Supplementary Instructions to Bidders.

B. All Bidders, subcontractors, and suppliers are invited to attend.

C. Representatives of City Engineer will attend.

16.0 *OPENING OF BIDS*

A. Bids are opened by the City Secretary and publicly read in City Council Chambers on the Public Level in City Hall Annex at 11:00 a.m. on Bid Date.

B. Place and date of Bid opening may be changed in accordance with Sections 15-3(b)(5) and 15-3(b)(6) of the City Code.

17.0 *EVALUATION AND CONSIDERATION OF BIDS*

A. Project Manager will tabulate, record and evaluate Bids.

B. The City may reject all Bids or may reject any defective Bid.

18.0 *ACCEPTANCE OF THE BID*

A. The City will send to Low Bidder Document 00498 – Notice of Intent to Award. Acceptance by the City is conditioned upon Bidder's timely and proper submittal of documents required in Document 00495 – Post-Bid Procedures.

B. The Bid remains open to acceptance and is irrevocable for the period of time stated in Document 00410A – Bid Form – Part A.

END OF DOCUMENT

Document 00210

SUPPLEMENTARY INSTRUCTIONS TO BIDDERS

The following Paragraphs modify Document 00200 - Instructions to Bidders. Where a portion of the Instructions to Bidders is modified or deleted by these Supplementary Instructions, the unaltered portions of the Instructions to Bidders remains in effect.

2.0 – DEFINITIONS: Add the following Paragraphs to this Section:

O. *Office of Business Opportunity (OBO):* All references to Affirmative Action Contract Compliance Division (AACC) set forth in Document 00700 – General Conditions and in other documents of the Project Manual, shall refer to, and include, the Office of Business Opportunity.

3.0 - NOTICE TO BIDDERS: Add the following Paragraph to this Section:

C. The City will award this contract to a "Local Business", as that term is defined in Section 15-176 of the City of Houston Code of Ordinances ("the Code"):

- If the bid of the Local Business is less than $100,000 and is the lowest responsible bid or is within 5% of the lowest bid received, or
- If the bid of the Local Business is more than $100,000 and is the lowest responsible bid or is within 3% of the lowest bid received, and
- Unless the Director determines that such an award would unduly interfere with contract needs, as provided in Section 15-181 of the Code.

If there is no bid of a Local Business that meets these criteria, the City will award the contract to the lowest responsible bidder.

4.0 – BID DOCUMENTS: Add the following Paragraphs to this Section:

A. Add the following Paragraph A.1:

1. Bid documents may only be obtained electronically at the City's website: http://bidsets.publicworks.houstontx.gov/.

D. Add the following Paragraph D.1:

1. Copies of the City Standard Specifications and Details may be acquired at no cost on the City's website **http://documents.publicworks.houstontx.gov/document-center/cat_view/88-engineering-and-construction/92-specifications/208-division-02-16-standard-specifications.html**

E. The following plan rooms, whose names, addresses, phone and fax numbers were last updated on April 9, 2007, have been authorized by the City to display Bid Documents for examination:
(Note: The Bid Documents furnished to the plan rooms for examination can be in electronic format, in hard copies, or in any other formats pertaining to each City Contracting Division's discretion.)

1. AMTEK Information Services, Inc., 4001 Sherwood Lane, Houston, TX 77092, 713-956-0100, Fax 713-956-5340, Email: planroom@amtekusa.com

2. Associated Builders & Contractors, Inc., (ABC), 3910 Kirby, Suite 131, Houston, TX 77098-4151, 713-523-6222, Fax 713-874-0747. Email: lori@abchouston.org

3. Associated General Contractors (AGC-BB) Building Branch, 3825 Dacoma, Houston, TX 77092-8717, 713-843-3700, Fax 713-843-3701. Email: karla.s@agchouston.org

4. Associated General Contractors, (AGC-HHUI), Highway, Heavy Utilities and Industrial Branch, 2400 Augusta St., Suite 180, Houston, TX 77057, 713-334-7100, Fax 713-334-7130. Email: houston@agctx.org (Attention: Mel Keyser)

5. Construction Information Network, 1225 North Loop West, Suite 550, Houston, TX 77008, 713-868-2233 ext. 329, Fax 866-852-2713. Email: paul.tilford@cnsx.com

6. F. W. Dodge Corporation, 4101 Greenbriar, Suite 320, Houston, TX 77098, 713-529-4895, Fax 713-524-7639. Email: terrie_harris@mcgraw-hill.com

7. Hispanic Contractors Association of Houston (HCA-GHA), 11 Parker Road, Suite 7, Houston, TX 77241, 713-699-2732 or 832-754-3705, Fax 713-695-1556, Email: hispanicontractorsassociation@yahoo.com; or Randymagdaleno@yahoo.com

8. Houston Minority Business Development Center, 2900 Woodridge, Suite 124, Houston, TX 77087, 713-644-0821, Fax 713-644-3523. Email: gtamez@gacompanies.com

9. Reed Construction Data, 30 Technology Parkway South, Suite 100, Norcross, GA – 30092-8629. Tel. 1-800-424-3996 or 1-800-699-8640; Fax 1-800-317-0870 or 1-800-508-5370.

10. The Builders' Exchange of Texas, Inc., 3910 Kirby, Suite 131, Houston, TX 77098, 210-564-6900, Fax: 210-564-6921, Email: houston@bxtx.com

F. Add the following Paragraph F.1:

1. **Designation as a City Business or Local Business**

To be designated as a City or Local Business for the purpose of the Hire Houston First Program, as set out in Article XI of Chapter 15 of the Houston City Code, a bidder or proposer must submit the Hire Houston First Application and Affidavit to the Director of the Mayor's Office of Business Opportunity (OBO) and receive notice that the designation has been approved prior to submission of a bid or proposal. Submit with your bid a valid official letter from OBO with your designation as a City or Local Business.

5.0 - EXAMINATION OF DOCUMENTS, SITE, AND LOCAL CONDITIONS: Insert the following paragraph:

A. Add the following Paragraph D.1:

1. Work will be performed in public right-of-way. The site may be examined at any time during daylight hours.

9.0 – PREPARATION OF BIDS: Add the following Paragraph I to this Paragraph:

I. For math errors the City encounters in analyzing Bids, the following guidance will be used:

In the event of a conflict between:	The Bid Price is:
1. Individual Unit Price and Extension of that Unit Price	Individual Unit Price times Estimated Quantity
2. A Unit Price extension and total of Unit Price Extensions	Sum of all Individual Unit Price Extensions
3. Individual Alternate and total of Alternates	Sum of all Individual Alternates
4. Individual subtotals for Stipulated Price, Base Unit Prices, Extra Unit Prices, Contractor Bonus, Cash Allowances, and Alternates; and the Total Bid Price	Sum of Individual subtotals for Stipulated Price, Base Unit Prices, Extra Unit Prices, Contractor Bonus, Cash Allowances and Alternates

10.0 – BID SUBMISSION: Add the following Paragraph A.1 to this Section:

A. Add the following Paragraph A.1:

1. City Secretary will receive Bids at 900 Bagby, Room P101, Houston, Texas until 10:30 a.m., local time on February 4, 2016.

15.0 – PREBID MEETING: Add the following Paragraph A.1 to this Section:

A. Add the following Paragraph A.1:

1. A Prebid Meeting will be held at 10:00 A.M. on Tuesday January 19, 2016, in 14th Floor, Conference Room No. 1453 at 611 Walker Street, Houston, Texas 77002.

END OF DOCUMENT

Document 00220

REQUEST FOR BID INFORMATION

PROJECT: New/Replacement of Water Well – Forest Cove III

PROJECT No.: WBS No. S-000100-0016-4

TO: Tina Yao, P.E.
15th Floor
611 Walker, Houston, Texas 77002

Phone No. (832) 395-2324
Fax No. (832) 395-2344
Email Addr. tina.yao@houstontx.gov

(Type or Print question legibly; use back if more space is needed)

This request relates to _____ (Drawing / Detail No.) and/or _____ (Specification Section No.)

Attachments to this request: _____

_____ Signature

_____ Date

_____ (Type or Print Name)

_____ (Type or Print Company Name)

END OF DOCUMENT

Document 00320

GEOTECHNICAL INFORMATION

1. DOCUMENT INCLUDES

   A. Soils investigation reports.
   B. Bidder's responsibilities.

2. RELATED DOCUMENTS

   A. Document 00340 – Environmental Information
   B. Section 02260 - Trench Safety Systems

3. SITE INVESTIGATION REPORTS

   A. In the design and preparation of Contract documents for this Project, the City and Design Consultant have used information in geotechnical reports for the investigation and analysis of soils and subsurface conditions at the Project site.

   B. An electronic copy of the report for this project is included in a CD-Rom affixed to the inside front cover of the project manual.

   C. Neither the City nor Design Consultant is responsible for accuracy or completeness of any information or data.

4. GEOTECHNICAL REPORTS

   A. Report No.: HG1216881 Prepared by (Firm Name): HVJ Associates, Inc.; Title: Final Geotechnical Investigation / Forest Cove III Well Project/ WBS No. S-000100-0016-4. Report Date: February 20, 2015 No. of Pages: 8 + Attachments + Contents.

5. BIDDER RESPONSIBILITIES

   A. Bidder shall take full responsibility for interpretation and use of information contained in above listed reports for its bidding and construction purposes.

   B. Bidder may perform additional soils investigations as Bidder deems appropriate.

END OF DOCUMENT

Document 00340

ENVIRONMENTAL INFORMATION

1.0 DOCUMENT INCLUDES

A. Environmental Site Assessment, if applicable.

B. Asbestos and Lead Surveys, if applicable.

C. Bidder's responsibilities.

2.0 RELATED DOCUMENTS

A. Document 00320 - Geotechnical Information

3.0 SITE INVESTIGATION REPORTS

A. In the design and preparation of Contract documents for this Project, the City and Design Consultant have used information in environmental site assessment reports for the investigation and analysis of soils and subsurface conditions at the Project site.

B. In the design and preparation of Contract documents for this Project, the City and Design Consultant have relied upon information in surveys taken for Asbestos-containing Materials (ACMs) and lead at the Project site.

C. An electronic copy of each report for this project is included in a CD-Rom affixed to the inside front cover of the project manual.

D. Neither the City nor Design Consultant is responsible for accuracy or completeness of any information or data.

4.0 REPORTS

A. Environmental Assessment Surveys

1. Report No.: HE1216880 Prepared by (Firm Name): HVJ Associates, Inc.; Title: Phase I Environmental Site Assessment Forest Cove Water Well/ WBS No. S-000100-0016-4; Report Date: July 18, 2014 No. of Pages: 12 + Attachments + Contents.

5.0 BIDDER RESPONSIBILITIES

A. Bidder shall take full responsibility for interpretation and use of information contained in above listed reports for bidding and construction purposes.

B. Bidder may perform additional investigations as Bidder deems appropriate.

END OF DOCUMENT

Document 00410A

BID FORM – PART A

To: **The Honorable Mayor and City Council of the City of Houston**
City Hall Annex
900 Bagby Street
Houston, Texas 77002

Project: New / Replacement of Water Well – Forest Cove III
Project No.: WBS No. S-000100-0016-4
Bidder: _____
(Print or type full name of business entity, such as corporation, LLC, etc)

1.0 OFFER

A. Total Bid Price: Having examined the Project location and all matters referred to in Bid Documents for the Project, we, the undersigned, offer to enter into a Contract to perform the Work for the Total Bid Price shown on the signature page of this Document

B. Security Deposit: Included with the Bid is a Security Deposit in the amount of 10 percent of the Total Bid Price subject to terms described in Document 00200 – Instructions to Bidders.

C. Period for Bid Acceptance: This offer is open to acceptance and is irrevocable for 90 days from Bid Date. That period may be extended by mutual written agreement of the City and Bidder.

D. Addenda: All Addenda have been received. Modifications to Bid Documents have been considered and all related costs are included in the Total Bid Price.

E. Bid Supplements: The following documents are attached:

[X] Security Deposit *(as defined in Document 00200 – Instructions to Bidders)*
[X] Document 00450 - Bidder's Statement of MWSBE Status
[X] Document 00452 - Contractor's Submission List - Fair Campaign Ordinance Form A
[X] Document 00453 – Bidder's Statement of Residency *(not required for AIP funded project)*
[X] Document 00454 - Affidavit of Non-interest
[X] Document 00455 - Affidavit of Ownership or Control
[ ] Document 00456 - Bidder's Certificate of Compliance with Buy American Program *(required for AIP funded project)*
[X] Document 00457 – Conflicts of Interest Questionnaire (CIQ)
[ ] Document 00458 - Bidder's Certificate Regarding Foreign Trade Restriction *(required for AIP funded project)*
[ ] Document 00459 - Contractor's Statement Regarding Previous Contracts Subject to EEO *(required for AIP funded project)*

[X] Document 00460 – Pay or Play Acknowledgement Form (POP 1-A)
[X] Document 00470 – Bidder's MWSBE Participation Plan *(required unless no MWSBE participation goal is provided in Document 00800* (the "Goal")*).*
[X] Document 00471 – Bidder's Record of Good Faith Efforts *(required if the goal in Bidder's Participation Plan–Document 00470 is lower than the Goal).*
[X] Document 00472 – Bidder's Goal Deviation Request *(required if the goal in Bidder's Participation Plan–Document 00470 is lower than the Goal).*
[X] Others as listed: Valid official letter from OBO with your designation as a City or Local Business

2.0 CONTRACT TIME

A. If offer is accepted, Contractor shall achieve Date of Substantial Completion within 400 days after Date of Commencement of the Work, subject to adjustments of Contract Time as provided in the Contract.

Document 00410B

BID FORM – PART B

1.0 TOTAL BID PRICE HAS BEEN CALCULATED BY BIDDER, USING THE FOLLOWING COMPONENT PRICES AND PROCESS (PRINT OR TYPE NUMERICAL AMOUNTS):

A. STIPULATED PRICE: $ [N/A]

(Total Bid Price; minus Base Unit Prices, Extra Unit Prices, Cash Allowances and All Alternates, if any)

B. BASE UNIT PRICE TABLE:

Item No.	Spec Ref.	Base Unit Short Title	Unit of Measure	Estimated Quantity	Unit Price (this column controls)	Total in Figures
1.	01502	Mobilization	LS	1	$ 60,000.00 [1]	$ 60,000.00 [1]
2.	01110	Drill, construct, test and equip Forest Cove Water Well No. 5, including: a) Pilot hole drilled and sampled. b) Reaming of pilot hole and conductor casing set and cemented in place. c) Underreaming the pilot hole below the conductor casing. d) Production casing set in place. e) Graveling, sterilizing and developing the well. f) Furnishing the test pump. g) Concrete foundation for permanent pump. h) Permanent pump, with electric motor. i) A 1/4-inch, PVC-coated, stainless steel air-line tubing, water-level monitor assembly and 1-1/4-inch Schedule 80 PVC solution tubing. j) Discharge piping manifold and pipe supports, complete. k) Chlorine line. l) Well yard clearing and grubbing, grading, fencing, sound barrier, sidewalks, surfacing, topsoil, seeding and sodding.	LS	1		
3.	01110	8-inch DIP	LF	85		

Item No.	Spec Ref.	Base Unit Short Title	Unit of Measure	Estimated Quantity	Unit Price (this column controls)	Total in Figures
4.	01110	8-inch steel pipe connection to ground storage tank	LS	1		
5.	01110	All electrical work	LS	1		
6.	01110	Multilin programming	LS	1		
7.	01110	Controller programming	LS	1		
8.	02260	Trench Safety System	LF	90		
9.	01110	Concrete splash-pad inlet and storm sewer system	LS	1		
10.	01110	Permeable gravel paving	SY	230		
11.	01110	Permeable gravel sidewalk	SY	15		
12.	01570	Reinforced Filter Fabric Barrier	LF	420		
13.	01570	Inlet Protection Barrier	LF	25		
TOTAL BASE UNIT PRICES						$_____

REST OF PAGE INTENTIONALLY LEFT BLANK

C. EXTRA UNIT PRICE TABLE:

Item No.	Spec Ref.	Extra Unit Short Title	Unit of Measure	Estimated Quantity	Unit Price (this column controls)	Total in Figures
14.	02529	Spectralog, if required by the City, in a pilot hole after making and reviewing Gamma Ray Log, all complete.	EA	1		
15.	02529	Furnish and install 30-sack cement plug, if required, in a pilot hole below the selected completion depth of the well, complete.	EA	1		
16.	02529	Extra sacks of cement more than the base amount of 30 sacks in a cement plug below the selected completion depth of the well included in Item 15 above.	SK	20		
17.	02529	Complete water-sampling operation in a pilot hole from which the City requires water samples to be taken with a base development and pumping time of 36 hours, water samples and associated static water-level measurements, all complete.	EA	2		
18.	02529	Pilot hole, as required, other than the 1,150-foot base depth for Forest Cove Water Well No. 5. See Footnote (2)	LF	100		
19.	02529	Abandonment, if required, of pilot hole included in Item 2.	EA	1	$ 105,000.00[1]	(leave blank)
20.	02529	20-inch diameter surface casing, as required, cemented in place other than the 710-foot base depth for the well in Item 2. See Footnote (2)	LF	10		
21.	02529	14-inch diameter steel blank production casing, as required, in place other than the 253-foot base length for the well in Item 2. See Footnote (2)	LF	10		
22.	02529	14-inch diameter stainless steel screen wrapped on steel pipe, as required in place other than the 182-foot base length for the well in Item 2. See Footnote (2)	LF	15		

Bidder's Initials [ ]

Item No.	Spec Ref.	Extra Unit Short Title	Unit of Measure	Estimated Quantity	Unit Price (this column controls)	Total in Figures
23.	15162	20-foot length of pump column assembly, air line, and 1 1/4-inch Schedule 80 PVC tubes in place complete, if required, other than the 460-foot base length in Item 2. See Footnote (2)	EA	4		
24.	15162	Intermediate stage of bowl assembly added to a pump, as quoted in Item 2, if required, and as shown in the pump data submittals for conditions.	EA	2		
25.	02529	One-hour of pumping or water-level recovery time, if required, other than 36 hours for a complete water sampling operation given in Item 17. See Footnote (2)	HR	20		
26.	02529	One-hour of pumping test time, if required, other than 96 hours given for each well in Item 2. See Footnote (2)	HR	10		
TOTAL EXTRA UNIT PRICES						$_____

REST OF PAGE INTENTIONALLY LEFT BLANK

D. CASH ALLOWANCE TABLE:

Item No.	Spec Ref.	Cash Allowance Short Title	Cash Allowance in Figures[1]
1.	01110	City of Houston Building Permit	$ 30,000.00
TOTAL CASH ALLOWANCES			**$ 30,000.00**

E. ALTERNATES TABLE:

Item No.	Spec Ref.	Alternate Short Title	Unit of Measure	Estimated Quantity	Unit Price (this column controls)	Total Price for Alternate in figures
1.		N/A				
TOTAL ALTERNATES						**$ N/A**

REST OF PAGE INTENTIONALLY LEFT BLANK

F. TOTAL BID PRICE: $_____
(Add Totals for Items A., B., C., D., and E. above)

2.0 SIGNATURES: By signing this Document, I agree that I have received and reviewed all Addenda and considered all costs associated with the Addenda in calculating the Total Bid Price.

Bidder: _____
(Print or type full name of your proprietorship, partnership, corporation, or joint venture.*)

**By: _____
Signature Date

Name: _____
(Print or type name) Title

Address: _____
(Mailing)

_____
(Street, if different)

Telephone and Fax Number: _____
(Print or type numbers)

* If Bid is a joint venture, add additional Bid Form signature sheets for each member of the joint venture.

** Bidder certifies that the only person or parties interested in this offer as principals are those named above. Bidder has not directly or indirectly entered into any agreement, participated in any collusion, or otherwise taken any action in restraint of free competitive bidding.

Note: This document constitutes a government record, as defined by § 37.01 of the Texas Penal Code. Submission of a false government record is punishable as provided in § 37.10 of the Texas Penal Code.

Footnotes for Tables B through E:
(1) Fixed Unit Price determined prior to Bid. Cannot be adjusted by the Bidder.
(2) The same unit price applies if there is a unit quantity deduction.

Document 00430

BIDDER'S BOND

THAT WE, _____, as Principal,
(Bidder)
("Bidder"), and the other subscriber hereto, _____, as Surety, do hereby acknowledge ourselves to be held and firmly bound to the City of Houston, a municipal corporation, in the sum of _____ Dollars ($_____) (an amount equal to 10 percent of the Total Bid Price, including Cash Allowances and Alternates, if any, for the payment of which sum, well and truly to be made to the City of Houston and its successors, the Bidder and Surety do bind themselves, their heirs, executors, administrators, successors, and assigns, jointly and severally.

THE CONDITIONS OF THIS OBLIGATION ARE SUCH THAT:

WHEREAS, the Bidder has submitted on or about this day a proposal offering to perform the following:

_____
(Project Name, Location and Number)
in accordance with the Drawings, Specifications, and terms and conditions related thereto to which reference is hereby made.

NOW, THEREFORE, if the Bidder's offer as stated in the Document 00410 – Bid Form is accepted by the City, and the Bidder executes and returns to the City Document 00520 – Agreement, required by the City, on the forms prepared by the City, for the Work and also executes and returns the same number of the Performance, Payment and Maintenance Bonds (such bonds to be executed by a Corporate Surety authorized by the State Board of Insurance to conduct insurance business in the State of Texas, and having an underwriting limitation in at least the amount of the bond) and other submittals as required by Document 00495 - Post-Bid Procedures, in connection with the Work, within the Contract Time, then this obligation shall become null and void; otherwise it is to remain in full force and effect.

If Bidder is unable to or fails to perform the obligations undertaken herein, the undersigned Bidder and Surety shall be liable to the City for the full amount of this obligation which is hereby acknowledged as the amount of damages which will be suffered by the City on account of the failure of such Bidder to perform such obligations, the actual amount of such damages being difficult to ascertain.

Notices required or permitted hereunder shall be in writing and shall be deemed delivered when actually received or, if earlier, on the third day following deposit in a United States Postal Service post office or receptacle, with proper postage affixed (certified mail, return receipt requested), addressed to the respective other Party at the address prescribed in the Contract documents, or at such other address as the receiving Party may hereafter prescribe by written notice to the sending Party.

IN WITNESS THEREOF, the Bidder and Surety have signed and sealed this instrument on the respective dates written below their signatures and have attached current Power of Attorney.

ATTEST, SEAL: (if a corporation)
WITNESS: (if not a corporation)

By: _____
Name:
Title:

ATTEST/SURETY WITNESS: (SEAL)

By: _____
Name:
Title:
Date:

_____
(Name of Bidder)

By: _____
Name:
Title:
Date:

_____
(Full Name of Surety)

_____
(Address of Surety for Notice)

_____
(Telephone Number of Surety)

By: _____
Name:
Title:
Date:

END OF DOCUMENT

Document 00450

BIDDER'S STATEMENT OF MWBE/PDBE/DBE/SBE STATUS

This certifies that the status of the Bidder, _____, in
(Bidder's Name)
regard to the City of Houston Code of Ordinances, Chapter 15, Article V, relating to City-wide percentage goals for contracting with Minority and Women-owned Business Enterprises (MWBE) and Disadvantaged Business Enterprises (DBE), Chapter 15, Article VI, relating to City-wide percentage goals for contracting with Persons with Disabilities Business Enterprises (PDBE) and Chapter 15, Article IX, relating to City-wide percentage goals for contracting with a Small Business Enterprise (SBE) is as follows:

1. Bidder (individual, partnership, corporation) is [__] is not [__] a Minority Business Enterprise as certified by the Office of Business Opportunity.

2. Bidder (individual, partnership, corporation) is [__] is not [__] a Women-owned Business Enterprise as certified by the Office of Business Opportunity

3. Bidder (individual, partnership, corporation) does [__] does not [__] declare itself to be a Persons with Disabilities Business Enterprise as defined above.

4. Bidder (individual, partnership, corporation) does [__] does not [__] declare itself to be a Disadvantaged Business Enterprise as defined above.

5. Bidder (individual, partnership, corporation) does [__] does not [__] declare itself to be a Small Business Enterprise as defined above.

Signature: _____

Title: _____

Date: _____

END OF DOCUMENT

Document 00452
Form A
CONTRACTOR SUBMISSION LIST
CITY OF HOUSTON FAIR CAMPAIGN ORDINANCE

The City of Houston Fair Campaign Ordinance makes it unlawful for a Contractor to offer any contribution to a candidate for City elective office (including elected officers-elect) during a certain period of time prior to and following the award of the Contract by the City Council. The term "Contractor" includes proprietors of proprietorships, partners or joint venturers having an equity interest of 10 percent or more for the partnership or joint venture, and officers, directors and holders of 10 percent or more of the outstanding shares of corporations. Submission of a statement disclosing the names and business addresses of each of those persons is required with each Bid/Proposal for a City Contract. See Chapter 18 of the City of Houston Code of Ordinances for further information.

This list is submitted under the provisions of Section 18-36(b) of the City of Houston Code of Ordinances in connection with the attached Bid/Proposal of:

Firm or Company Name: _____
Firm or Company Address: _____
_____

The firm/company is organized as indicated below. Check one as applicable and attach additional pages if needed to supply the required names and addresses.

[ ] SOLE PROPRIETOR

Name _____ _____
Proprietor Address

[ ] A PARTNERSHIP

LIST EACH PARTNER HAVING EQUITY INTEREST OF 10% OR MORE OF PARTNERSHIP (IF NONE STATE "NONE")

Name _____ _____
Partner Address

Name _____ _____
Partner Address

[ ] A CORPORATION

LIST ALL DIRECTORS OF THE CORPORATION (IF NONE STATE "NONE")

Name _____ _____
Director Address

CONTRACTOR SUBMISSION LIST
FAIR CAMPAIGN ORDINANCE

Name _____ _____
Director Address

Name _____ _____
Director Address

LIST ALL OFFICERS OF THE CORPORATION (IF NONE STATE "NONE")

Name _____ _____
Officer Address

Name _____ _____
Officer Address

Name _____ _____
Officer Address

LIST ALL INDIVIDUALS OWNING 10% OR MORE OF OUTSTANDING SHARES OF STOCK OF THE CORPORATION (IF NONE STATE "NONE")

Name _____ _____
Owner Address

Name _____ _____
Owner Address

Name _____ _____
Owner Address

I certify that I am duly authorized to submit this list on behalf of the firm, that I am associated with the firm in the capacity noted below, and that I have knowledge of the accuracy of the information provided herein.

_____
Signature

_____
Printed Name

_____
Title

Note: This list constitutes a government record as defined by § 37.01 of the Texas Penal Code.

END OF DOCUMENT

Document 00453

BIDDER'S STATEMENT OF RESIDENCY

The City may not award a contract for general construction, services, or purchases to a Nonresident Bidder unless Nonresident's Bid is lower than the lowest Bid submitted by a responsible Texas Resident Bidder by the same amount that a Texas Resident bidder would be required to underbid the Nonresident Bidder to obtain a comparable contract in the state in which Nonresident's principle place of business is located.

1. This certifies that the Bidder, _____, is a State of Texas Resident Bidder as defined in TEX. GOVT. CODE ANN. § 2252.001(4) (Vernon 1994).

_____ _____
Signature Title

"Texas Resident Bidder" means a bidder whose principal place of business is in this State, and includes a Contractor whose ultimate parent company or majority owner has its principal place of business in this State. *When bidder cannot sign 1, above, proceed to 2.*

2. a. _____ is a resident of _____ and is a Nonresident Bidder as defined in TEX. GOVT. CODE ANN. § 2252.001(3) (Vernon 1994).

_____ _____
Signature Title

"Nonresident Bidder" means a bidder whose principal place of business is not in this State, but excludes a contractor whose ultimate parent company or majority owner has its principal place of business in this State.

b. The State of _____ _____ have a state statute giving
Bidder's resident state Does or Does Not
preference to resident bidders.

_____ _____
Signature Title

If the answer to 2.b is that your state does have a statute giving preference to resident bidders, then you must provide a copy and proceed to 3.

3. A copy of the State of _____ statute is attached.

_____ _____
Signature Title

_____
Date

END OF DOCUMENT

Document 00454

AFFIDAVIT OF NON-INTEREST

BEFORE ME, the undersigned authority, a Notary Public in and for the State of Texas, on this day personally appeared _____, who
Affiant

being by me duly sworn on his oath stated that he is _____, of
Title

_____,
Name of Firm

the firm named and referred to and in the foregoing; and that he knows of no officer, agent, or employee of the City of Houston being in any manner interested either directly or indirectly in such Contract.

_____
Affiant's Signature

SWORN AND SUBSCRIBED before me on _____.
Date

_____
Notary Public in and for the State of TEXAS

_____
Print or type name

My Commission Expires: _____
Expiration Date

END OF DOCUMENT

Document 00455

AFFIDAVIT OF OWNERSHIP OR CONTROL

ORIG. DEPT.: DEPARTMENT OF PUBLIC WORKS AND ENGINEERING **FILE/I.D. NO.:** S-000100-0016-4

INSTRUCTION: ENTITIES USING AN ASSUMED NAME SHOULD DISCLOSE SUCH FACT TO AVOID REJECTION OF THE AFFIDAVIT. THE FOLLOWING FORMAT IS RECOMMENDED: CORPORATE/LEGAL NAME DBA ASSUMED NAME.

STATE OF _____ §
§ **AFFIDAVIT OF OWNERSHIP OR CONTROL**
COUNTY OF _____ §

BEFORE ME, the undersigned authority, on this day personally appeared _____ [*FULL NAME*] (hereafter "Affiant"), _____ [*STATE TITLE/CAPACITY WITH CONTRACTING ENTITY*] of _____ [*CONTRACTING ENTITY'S CORPORATE/LEGAL NAME*] ("Contracting Entity"), who being by me duly sworn on oath stated as follows:

1. Affiant is authorized to give this affidavit and has personal knowledge of the facts and matters herein stated.

2. Contracting Entity seeks to do business with the City in connection with _____ [*DESCRIBE PROJECT OR MATTER*] which is expected to be in an amount that exceeds $50,000.

3. The following information is submitted in connection with the proposal, submission or bid of Contracting Entity in connection with the above described project or matter.

4. Contracting Entity is organized as a business entity as noted below (check box as applicable).

FOR PROFIT ENTITY:

[ ] SOLE PROPRIETORSHIP
[ ] CORPORATION
[ ] PARTNERSHIP
[ ] LIMITED PARTNERSHIP
[ ] JOINT VENTURE
[ ] LIMITED LIABILITY COMPANY
[ ] OTHER (Specify type in space below)

NON-PROFIT ENTITY:

[ ] NON-PROFIT CORPORATION
[ ] UNINCORPORATED ASSOCIATION

_____

_____

_____

AFFIDAVIT OF OWNERSHIP OR CONTROL

5. The information shown below is true and correct for the Contracting Entity and all owners of 5% or more of the Contracting Entity and, where the Contracting Entity is a non-profit entity, the required information has been shown for each officer, *i.e.*, president, vice-president, secretary, treasurer, etc. ***[NOTE: IN ALL CASES, USE FULL NAMES, LOCAL BUSINESS AND RESIDENCE ADDRESSES AND TELEPHONE NUMBERS. DO NOT USE POST OFFICE BOXES FOR ANY ADDRESS. INCLUSION OF E-MAIL ADDRESSES IS OPTIONAL, BUT RECOMMENDED. ATTACH ADDITIONAL SHEETS AS NEEDED.]***

Contracting Entity

Name: _____

Business Address *[NO./STREET]* _____

[CITY/STATE/ZIP CODE] _____

Telephone Number (____)_____

Email Address *[OPTIONAL]* _____

Residence Address *[NO./STREET]* _____

[CITY/STATE/ZIP CODE] _____

Telephone Number (____)_____

Email Address *[OPTIONAL]* _____

5% Owner(s) or More **(IF NONE, STATE "NONE.")**

Name: _____

Business Address *[NO./STREET]* _____

[CITY/STATE/ZIP CODE] _____

Telephone Number (____)_____

Email Address *[OPTIONAL]* _____

Residence Address *[NO./STREET]* _____

[CITY/STATE/ZIP CODE] _____

Telephone Number (____)_____

Email Address *[OPTIONAL]* _____

6. ***Optional Information***

Contracting Entity and/or _____ [***NAME OF OWNER OR NON-PROFIT OFFICER***] is actively protesting, challenging or appealing the accuracy and/or amount of taxes levied against _____ [***CONTRACTING ENTITY, OWNER OR NON-PROFIT OFFICER***] as follows:

Name of Debtor: _____

Tax Account Nos. _____

Case or File Nos. _____

Attorney/Agent Name _____

Attorney/Agent Phone No. (_____)_____

Tax Years _____

Status of Appeal ***[DESCRIBE]*** _____

_____

_____

_____

Affiant certifies that he or she is duly authorized to submit the above information on behalf of the Contracting Entity, that Affiant is associated with the Contracting Entity in the capacity noted above and has personal knowledge of the accuracy of the information provided herein, and that the information provided herein is true and correct to the best of Affiant's knowledge and belief.

_____
Affiant

SWORN TO AND SUBSCRIBED before me this _____ day of _____, 20_____.

(Seal)

_____
Notary Public

NOTE:
This affidavit constitutes a **government record** as defined by Section 37.01 of the Texas Penal Code. Submission of a false government record is punishable as provided in Section 37.10 of the Texas Penal Code. Attach additional pages if needed to supply the required names and addresses.

END OF DOCUMENT

Document 00457

Conflict of Interest Questionnaire

****

Print out latest version of CIQ form from website listed below:

****

Local Government Code Chapter 176 requires Bidders with the City of Houston ("City") to file a Conflict of Interest Questionnaire with the City Secretary of the City of Houston.

The Conflict of Interest Questionnaire is available for downloading on the Texas Ethics Commission's website at: http://www.ethics.state.tx.us/forms/CIQ.pdf. The completed Conflict of Interest Questionnaire will be posted on the City Secretary's website. Also you will find a list of the City Local Government Officers on the City Secretary's website.

For your convenience the CIQ form is attached as part of this document. Although the City has provided this document for the Bidders convenience, it is the Bidders responsibility to submit the latest version of the CIQ form as promulgated by the Texas Ethics Commission.

The Failure of any Bidder to comply with this law is a Class C misdemeanor.

END OF DOCUMENT

Document 00460
(POP -1)
City of Houston
Pay or Play Program
Acknowledgement Form

It has been determined that the project currently open for bidding meets the criteria of the City of Houston Pay or Play program. This form acknowledges your awareness of the Pay or Play program which is authorized by Ordinance 2007-534. Your signature below affirms that you will comply with the requirements of the program if you are the successful bidder/proposer, and ensure the same on behalf of subcontracts subject to the Pay or Play Program.

I declare under penalty of perjury under the laws of the State of Texas that if awarded this contract which meets the criteria for the City of Houston's Pay or Play Program, I will comply with all requirements of the Pay or Play Program in accordance with Executive Order 1-7.

***Fill out all information below and submit this form with your bid/proposal packet.**

_____
Solicitation Number

_____ _____
Signature Date

_____ _____
Print Name City Vendor ID

_____ _____
Company Name Phone Number

_____
Email Address

Note: For more information contact your POP Liaison or the POP Contract Administrator. All contact information can be found on www.houstontx.gov →Departments→Office of Business Opportunity→Pay or Play.

Document 00470

BIDDER'S MWSBE PARTICIPATION PLAN

The Bidder or Proposer shall submit this completed form with the bid, to demonstrate the Bidder/Proposer's plan to meet the contract-specific MWSBE goal ("contract goal"). If the Bidder or Proposer cannot meet the contract goal, the Bidder/Proposer has the burden to demonstrate "Good Faith Efforts", which shall include correctly and accurately preparing and submitting this form, a Record of Good Faith Efforts (Document 00471), a Request for Deviation from the Goal (Document 00472), and providing supporting documentation evidencing their "Good Faith Efforts", as required by the City of Houston's Good Faith Efforts Policy (Document 00808). The City will review the Participation Plan and Good Faith Efforts at the time of bid opening. Visit http://www.houstontx.gov/obo for more information.

City Contract Goal	MBE 8%	WBE 3%	• MBE and WBE Goals are two separate Contract Goals. • Any excess of one Goal cannot be applied to meet another Goal. • An SBE can be applied to the MBE and/or WBE Goal, but not to exceed 4%.

NAICS Code (6 digit)	Description of Work (Plan Sheet #, Unit Price #, Scope of Work #, as applicable)	% of Total Bid Price (2 decimal places; for example, 5.00%)	Cert. Type for Goal: MBE, WBE, or SBE	Certified Firm Name Firm Address Contact Name Phone No. and E-Mail
			MBE ☐ WBE ☐ SBE ☐	
			MBE ☐ WBE ☐ SBE ☐	
			MBE ☐ WBE ☐ SBE ☐	
			MBE ☐ WBE ☐ SBE ☐	
			MBE ☐ WBE ☐ SBE ☐	
			MBE ☐ WBE ☐ SBE ☐	
			MBE ☐ WBE ☐ SBE ☐	

Bidder's Participation Plan Total	MBE	WBE	SBE

Signature for Company: _____ *

Printed Name: _____

Company Name: _____

Phone #: _____

Date: _____

*I understand that supplying inaccurate information may violate Texas Penal Code Section 37.10 and lead to City sanctions.

Document 00470
CONTINUATION PAGE

NAICS Code (6 digit)	Description of Work (Plan Sheet #, Unit Price #, Scope of Work #, as applicable)	% of Total Bid Price (2 decimal places; for example, 5.00%)	Cert. Type for Goal MBE, WBE, or SBE	Certified Firm Name Firm Address Contact Name Phone No. and E-Mail
			MBE ☐ WBE ☐ SBE ☐	
			MBE ☐ WBE ☐ SBE ☐	
			MBE ☐ WBE ☐ SBE ☐	
			MBE ☐ WBE ☐ SBE ☐	
			MBE ☐ WBE ☐ SBE ☐	
			MBE ☐ WBE ☐ SBE ☐	
			MBE ☐ WBE ☐ SBE ☐	
			MBE ☐ WBE ☐ SBE ☐	
			MBE ☐ WBE ☐ SBE ☐	
			MBE ☐ WBE ☐ SBE ☐	
			MBE ☐ WBE ☐ SBE ☐	
			MBE ☐ WBE ☐ SBE ☐	

Signature for Company: _____ * Date: _____

Print Name/Company Name:_____ Phone: _____

*I understand that supplying inaccurate information may violate Texas Penal Code Section 37.10 and lead to City sanctions.

Document 00471
PRE-BID GOOD FAITH EFFORTS

Bidder Name: _____ **Project Name**_____

A Bidder or Proposer that may be unable to complete or follow a Participation Plan (Document 00470) to meet the Contract Goal in the Supplemental Conditions (Document 00800), must submit this completed form, Goal Deviation Request Form (Document 00472), providing supporting documentation evidencing their "Good Faith Efforts", as required by the City of Houston's Good Faith Efforts Policy (see Document 00808).

The Bidder or Prime Contractor has the burden to demonstrate "Good Faith Efforts" to meet the MWSBE goal, which includes correctly and accurately preparing and submitting this form and other efforts described in the City's Good Faith Efforts Policy (Document 00808). The Office of Business Opportunity will review Good Faith Efforts and Participation Plan after selection of an apparent low bidder.

UNLESS THE BIDDER'S/PROPOSER'S PARTICIPATION PLAN MEETS THE CONTRACT GOAL, FAILURE TO SUBMIT THIS FORM MAY RESULT IN THE BID BEING FOUND NON-RESPONSIVE.

NAICS Code	Plan Item No.	MWSBE Type for Goal	Certified Firm Name Address, Phone No., and E-Mail	Certified Firm Contact Person	Methods of Contact	Prime Contact Dates	Certified Firm Response	Results of Contact (why suitable or not suitable for work)
		MBE ☐ WBE ☐ SBE ☐			Phone ☐ E-mail ☐ Fax ☐			
		MBE ☐ WBE ☐ SBE ☐			Phone ☐ E-mail ☐ Fax ☐			
		MBE ☐ WBE ☐ SBE ☐			Phone ☐ E-mail ☐ Fax ☐			
		MBE ☐ WBE ☐ SBE ☐			Phone ☐ E-mail ☐ Fax ☐			

Authorized Signature: _____ Date: _____ Phone: _____

Print Name: _____ Email Address: _____

Company Name: _____

CONTINUATION PAGE

NAICS Code	Plan Item No.	MWSBE Type for Goal	Certified Firm Name Address, Phone No., and E-Mail	Certified Firm Contact Person	Method of Contact	Prime Contact Dates	Certified Firm Response	Results of Contact (why suitable or not suitable for work)
		MBE ☐ WBE ☐ SBE ☐			Phone ☐ E-mail ☐ Fax ☐			
		MBE ☐ WBE ☐ SBE ☐			Phone ☐ E-mail ☐ Fax ☐			
		MBE ☐ WBE ☐ SBE ☐			Phone ☐ E-mail ☐ Fax ☐			
		MBE ☐ WBE ☐ SBE ☐			Phone ☐ E-mail ☐ Fax ☐			
		MBE ☐ WBE ☐ SBE ☐			Phone ☐ E-mail ☐ Fax ☐			
		MBE ☐ WBE ☐ SBE ☐			Phone ☐ E-mail ☐ Fax ☐			
		MBE ☐ WBE ☐ SBE ☐			Phone ☐ E-mail ☐ Fax ☐			

Authorized Signature: _____ Date: _____ Phone: _____

Print Name: _____ Email Address: _____

Company Name: _____

Document 00472
BIDDER'S MWSBE GOAL DEVIATION REQUEST

Company Name: _____

Project Name: _____

	MBE	WBE	Total
Department Approved Contract Goals	%	%	%

	MBE	WBE	SBE (Max 4% for Credit)	Total
Bidder's Proposed Participation Plan	%	%	%	%

Justification: Please provide the reason the Bidder is unable to meet the Contract Goal in Document 00800.

_____

_____

_____

Good Faith Efforts: Please list any efforts not listed in the Bidder's Pre-Bid Good Faith Effort (Document 00471) and provide supporting documentation evidencing "Good Faith Efforts", as required by the City of Houston's Good Faith Efforts Policy (Document 808).

_____

_____

_____

_____

Date: _____ Company Name: _____
Email: _____ Company Representative: _____
Phone Number: _____ Title: _____

FOR OFFICIAL USE ONLY: Approved [ ] Not Approved [ ]

OBO Representative _____ Date: _____

_____ Title: _____

Document 00495

POST-BID PROCEDURES

3.0 DOCUMENT ADDRESSES

A. Notice of Intent to Award

B. Monitoring Authority/Contracting Department

C. Requirements of Bidder

D. Failure of Bidder to comply with requirements

E. Notice to Proceed

4.0 NOTICE OF INTENT TO AWARD

A. The City will provide written Notice of Intent to Award to Low Bidder.

5.0 DEFINITIONS

A. The "Monitoring Authority" or "OBO" for this Project is:

Director, Office of Business Opportunity Division
City of Houston
611 Walker Street, 7th Floor
Houston, Texas 77002

B. The "Contracting Department" for this Project is:
Director, Department of DEPARTMENT OF PUBLIC WORKS AND ENGINEERING
City of Houston
611 Walker Street
Houston, Texas 77002
ATTN: **Tina Yao, P.E.,**

6.0 REQUIREMENTS OF BIDDER

A. Within10 days of receipt of Notice of Intent to Award, Low Bidder shall execute and deliver to Tina Yao, P.E., Project Manager and Monitoring Authority, for the City's approval, documents indicated by an "X" below:
[ ] Document 00570 – Revised MWSBE Participation Plan *(Do not submit if OBO*
Director approved Bidder's Plan – Document 00470)

[X] Executed Subcontract(s), Letter(s) of Intent, or documentation of good faith efforts to meet the MWSBE goals

B. Within 10 days of receipt of Notice of Intent to Award, Low Bidder shall execute and deliver to Tina Yao, P.E., Project Manager for the City's approval, documents indicated by an "X" below:

[ ] Document 00500 - Form of Business
[X] Document 00501 - Resolution of Contractor
[X] Document 00520 - Agreement
[X] Document 00600 - List of Proposed Subcontractors and Suppliers
[X] Document 00601 - Drug Policy Compliance Agreement
[X] Document 00602 - Contractor's Drug-free Workplace Policy *(Contractor creates this document.)*
[X] Document 00604 - History of OSHA Actions and List of On-the-job Injuries
[X] Document 00605 - List of Safety Impact Positions *(Contractor completes this list. Do not submit if submitting Document 00606.)*
[ ] Document 00606 - Contractor's Certification of No Safety Impact Positions *(Do not submit if submitting Document 00605.)*
[ ] Document 00607 - Certification Regarding Debarment, Suspension, and Other Responsibility Matters
[ ] Document 00608 - Contractor's Certification Regarding Non-segregated Facilities for Project Funded by AIP Grant
[X] Document 00610 - Performance Bond
[X] Document 00611 - Statutory Payment Bond
[X] Document 00612 - One-year Maintenance Bond
[ ] Document 00613 - One-year Surface Correction Bond
[X] Document 00620 - Affidavit of Insurance *(with Certificate of Insurance attached)*
[X] Document 00622 - Name and Qualifications of Proposed Superintendent *(Contractor creates this document.)*
[ ] Document 00623 - Contractor's Act of Assurance (SRF Form ED-103)
[X] Document 00624 - Affidavit of Compliance with S/WMBE Program
[ ] Document 00625 - SRF Participation Summary
[ ] Document 00626 - SRF Affirmative Steps Solicitation Report
[ ] Document 00627 - SRF Prime Contractor Affirmative Steps Certification and Goals
[ ] Document 00629 - Affidavit for FAA Form 7460-1
[X] Document 00630 - Certification of Compliance with Pay or Play Program
[X] Document 00631 - City of Houston Pay or Play Program – List of Subcontractors
[ ] Document 00809 – CDBG Requirements for Federally Funded Projects

C. Within 10 days of receipt of Notice of Intent to Award, Low Bidder shall execute the following forms and deliver them directly to the Monitoring Authority.

1. Original forms contained in Document 00805 – Equal Employment Opportunity Program Requirements:
   [X] Pages 00805-3 to 00805-5, Certification by Bidder Regarding Equal

Employment Opportunity

[X] *Page 00805-6, Total Work Force Composition of the Company, or copy of latest EEO-1 form (required only if Contractor has a work force of 50 or more people and the Original Contract Price is $50,000 or more)*

[X] *Page 00805-7, Equal Employment Opportunity Compliance Program*

[X] *Page 00805-26, Certification by Proposed Subcontractor Regarding Equal Employment Opportunity*

[X] *Page 00805-29, Certification by Proposed Material Supplier, Lessor, and Professional Service Providers Regarding Equal Employment Opportunity*

2. Original completed form Document 00633 - Certification by Proposed Material Suppliers, Lessors, and Professional Service Providers Regarding Equal Employment Opportunity, for each proposed material supplier and equipment supplier.

3. Original forms contained in Document 00820 – Wage Scale for Engineering Construction.

[X] *Certificate from Contractor Appointing Officer or Employee to Supervise Payment of Employees*

[ ] *Certificate from SubContractor Appointing Officer or Employee to Supervise Payment of Employees*

[ ] Document 00812, Exhibit "A" – Certificate from Contractor Appointing Officer or Employee to Supervise Payment of Employees

D. Designations of Subcontractors and Suppliers, who have been selected by Bidder in Document 00600 - List of Proposed Subcontractors and Suppliers, and accepted by the City, may be changed only with prior notice and acceptance by Project Manager as provided in Conditions of the Contract. For each Product Supplier subsequently added or substituted, provide an original completed form, Document 00633 - Certification by Proposed Material Suppliers, Lessors, and Professional Service Providers Regarding Equal Employment Opportunity, directly to the Monitoring Authority.

E. On Bidder's written request, Tina Yao, P.E., Project Manager may grant an extension of time, not to exceed 5 days, to furnish documents specified in Paragraphs 4.0.A and 4.0.B. If Bidder is required to resubmit documents specified in Paragraph 4.0.A or 4.0.B, Bidder shall do so within time limits provided in the request for resubmission.

F. Designations of Subcontractors and Suppliers, who have been selected by Bidder in its Participation Plan, and accepted by the City, may be changed only with prior notice and acceptance by the Monitoring Authority as provided in Document 00808 – Bidder/Contractor Requirements for the City of Houston Minority, Women, and Small Business Enterprise (MWSBE), and Persons with Disabilities Business Enterprise (PDBE).

5.0 FAILURE OF BIDDER TO COMPLY WITH REQUIREMENTS

A. Should Bidder, on receipt of Notice of Intent to Award, fail to comply with requirements of this Document 00495 within stated time, the City may declare award in default and require forfeiture of the Security Deposit.

B. After the City's written notice of default to Low Bidder, the City may award the Contract to Bidder whose offer is the next lowest bid, and Security Deposit of Bidder in default shall be forfeited to the City in accordance with provisions of Document 00200 - Instructions to Bidders.

6.0 NOTICE TO PROCEED

A. Upon the City's execution of the Agreement and delivery to Contractor, City Engineer will give Document 00551 - Notice to Proceed to Contractor, which establishes Date of Commencement of the Work.

END OF DOCUMENT

Document 00501

RESOLUTION OF CONTRACTOR

_____ ("Contractor"),
(Name of Contractor, e.g., "Biz. Inc.", "Biz LLP")

is a _____,
(Type of Organization, e.g.: Corporation, Limited Partnership, Limited Liability Partnership, Limited Liability Company, etc.)

which is bound by acts of _____,
(Name and Form of Governing Entity, e.g., "Biz Inc. Board of Directors", "Bill Smith, GP", etc.)

("Governing Entity").

On the _____ day of _____, 20___, the Governing Entity resolved, in accordance with all documents, rules, and laws applicable to the Contractor, that

_____, is authorized to act as the
(Contractor's Representative)

Contractor's Representative in all business transactions (initial one) ____ conducted in the State of Texas OR ____ related to this Contract; and

The Governing Entity warrants that the above resolution (a) was entered into without dissent or reservation by the Governing Entity, (b) has not been rescinded or amended, and (c) is now in full force and effect; and

In authentication of the adoption of this resolution, I subscribe my name on this day of _____, 20___.

_____ _____
(Authorized Signature for Governing Entity) (Print or Type Name and Title of Authorized Signatory)

SWORN AND SUBSCRIBED before me on _____
Date

_____
Notary Public in and for the State of Texas

My Commission Expires: _____ _____
Expiration Date Print or Type Name of Notary Public

Document 00520

AGREEMENT

Project: New/Replacement of Water Well – Forest Cove III

Project Location: The project is located at 1625 Laurel Springs Lane(Key Map No. 336-E)

Project No: WBS No. S-000100-0016-4

The City: THE CITY OF HOUSTON, 900 Bagby Street, Houston, Texas 77002 (the "City")

and

Contractor: _____

(Address for Written Notice) _____

_____

Fax Number: _____ **Phone Number:** _____

City Engineer, with respect to Sections 4.3 thru 4.5 of the General Conditions, is:

J. Timothy Lincoln, P.E. (or his successor)

P. O. Box 1562, Houston, Texas 77251-1562 (Address for Written Notice)

City Engineer, with respect to all other terms of the General Conditions, is:

Joseph T. Myers, P.E. (or his successor)

Fax Number: (832) 395-2410

THE CITY AND CONTRACTOR AGREE AS FOLLOWS:

ARTICLE 1
THE WORK OF THE CONTRACT

1.1 Contractor shall perform the Work in accordance with the Contract.

ARTICLE 2
CONTRACT TIME

2.1 Contractor shall achieve Date of Substantial Completion within **400** days after Date of Commencement of the Work, subject to adjustments of Contract Time as provided in the Contract.

2.2 The Parties recognize that time is of the essence for this Agreement and that the City will suffer financial loss if the Work is not completed within the Contract Time. Parties also recognize delays, expense, and difficulties involved in proving in a legal or arbitration proceeding actual loss suffered by the City if the Work is not completed on time. Accordingly, instead of requiring any such proof, the Parties agree that as liquidated damages for delay (but not as a penalty), Contractor shall pay the City the amount stipulated in Document 00800 – Supplementary Conditions, for each day beyond Contract Time.

ARTICLE 3
CONTRACT PRICE

3.1 Subject to terms of the Contract, the City will pay Contractor in current funds for Contractor's performance of the Contract, Contract Price of $__ which includes Alternates, if any, accepted below.

3.2 The City accepts Alternates as follows:

****

Delete or add lines below to indicate all Alternates that were included in Request for competative sealed proposals. Remove brackets and instructions when done. Change color of remaining text to black.

****

Alternate No. 1 ___[*Accepted or Not Accepted*]_____
Alternate No. 2 ___[*Accepted or Not Accepted*]_____
Alternate No. 3 ___[*Accepted or Not Accepted*]_____
Alternate No. 4 ___[*Accepted or Not Accepted*]_____

ARTICLE 4
PAYMENTS

4.1 The City will make progress payments to Contractor as provided below and in Conditions of the Contract.

4.2 The Period covered by each progress payment is one calendar month ending on the [___] 15th or [___] last day of the month.

4.3 The City will issue Certificates for Payment and will make progress payments on the basis of such Certificates as provided in Conditions of the Contract.

4.4 Final payment, constituting entire unpaid balance of Contract Price, will be made by the City to Contractor as provided in Conditions of the Contract.

ARTICLE 5
CONTRACTOR REPRESENTATIONS

5.1 Contractor represents:

5.1.1 Contractor has examined and carefully studied Contract documents and other related data identified in Request For or Competitive Sealed Proposals or Competitive Sealed Bids.

5.1.2 Contractor has visited the site and become familiar with and is satisfied as to general, local, and site conditions that may affect cost, progress, and performance of the Work.

5.1.3 Contractor is familiar with and is satisfied as to all federal, state, and local laws and regulations that may affect cost, progress, and performance of the Work.

5.1.4 Contractor has carefully studied all: (1) reports of explorations and tests of subsurface conditions at or contiguous to the site and all drawings of physical conditions in or relating to existing surface or subsurface structures at or contiguous to the site (except Underground Facilities) which have been identified in Contract

documents and (2) reports and drawings of a hazardous environmental condition, if any, at the site which has been identified in Contract documents.

5.1.5 Contractor has obtained and carefully studied (or assumes responsibility for having done so) all additional or supplementary examinations, investigations, explorations, tests, studies, and data concerning conditions (surface, subsurface, and Underground Facilities) at or contiguous to the site which may affect cost, progress, or performance of the Work or which relate to any aspect of the means, methods, techniques, sequences, and procedures of construction to be employed by Contractor, including applying specific means, methods, techniques, sequences, and procedures of construction, if any, expressly required by the Contract to be employed by Contractor, and safety precautions and programs incident thereto

5.1.6 Contractor does not consider that any further examinations, investigations, explorations, tests, studies, or data are necessary for performance of the Work at Contract Price, within Contract Time, and in accordance with the Contract.

5.1.7 Contractor is aware of general nature of work to be performed by the City and others at the site that relates to the Work as indicated in Contract documents.

5.1.8 Contractor has correlated information known to Contractor, information and observations obtained from visits to the site, reports and drawings identified in the Contract, and all additional examinations, investigations, explorations, tests, studies, and data with the Contract.

5.1.9 Contractor has given City Engineer written notice of all conflicts, errors, ambiguities, or discrepancies that Contractor has discovered in the Contract, and written resolution thereof by City Engineer is acceptable to Contractor.

5.1.10 Contract documents are generally sufficient to indicate and convey understanding of all terms and conditions for performance and furnishing of the Work.

ARTICLE 6
MISCELLANEOUS PROVISIONS

6.1 The Contract may be terminated by either Party as provided in Conditions of the Contract.

6.2 The Work may be suspended by the City as provided in Conditions of the Contract.

ARTICLE 7
ENUMERATION OF CONTRACT DOCUMENTS

7.1 The following documents are incorporated into this Agreement:

7.1.1 Document 00700 - General Conditions.

7.1.2 Document 00800 - Supplementary Conditions.

7.1.3 Division 01 - General Requirements.

7.1.4 Divisions 02 through 16 of Specifications.

7.1.5 Drawings listed in Document 00015 - List of Drawings. Drawing No. _____and bound separately.

7.1.6 Addenda [and Riders] which apply to the Contract, are as follows:

Addendum No. 1, dated None

Addendum No. 2, dated None

Addendum No. 3, dated None

Rider No. [___], dated None

7.1.7 Other documents:

	Document No.	Title
[X]	00410B	Bid Form – Part B
[X]	00470	Standard Pre-Bid Participation Plan Document
[ ]	00471	Pre-Bid Good Faith Efforts Report
[ ]	00472	Goal Deviation Request
[ ]	00500	Form of Business
[X]	00501	Resolution of Contractor (if a corporation)
[ ]	00570	Amended S/MWBE Participation Plan
[ ]	00571	Contractor's Good Faith Efforts Report
[ ]	00572	Plan Deviation Request
[ ]	00608	Contractor's Certification Regarding Non-Segregated Facilities for Project Funded by AIP Grant
[X]	00610	Performance Bond
[X]	00611	Statutory Payment Bond
[X]	00612	One-year Maintenance Bond
[ ]	00613	One-year Surface Correction Bond
[X]	00620	Affidavit of Insurance (with the Certificate of Insurance attached)
[ ]	00623	Contractor's Act of Assurance (SRF Form ED-103)
[X]	00624	Affidavit of Compliance with Affirmative Action Program
[ ]	00628	Affidavit of Compliance with Disadvantaged Business Enterprise (DBE) Program for Project Funded By AIP Grant
[X]	00630	(POP-2) Certification of Compliance with Pay or Play Program
[X]	00631	(POP-3) City of Houston Pay or Play Program – List of Subcontractors
[X]	00800	Supplementary Conditions for Project CIP or AIP Funded
[ ]	00801	Supplementary Conditions for Project AIP Funded
[ ]	00802	SRF Supplementary Conditions
[X]	00805	Equal Employment Opportunity Program Requirements
[ ]	00806	EPA DBE and Wage Rate Requirements (SRF only)
[ ]	00807	Bidder/Contractor Requirements for DBE Program
[X]	00808	Minority and Women-owned Business Enterprise (MWBE) & Persons with Disabilities Business Enterprise (PDBE) Program
[ ]	00810	Federal Wage Rate - Highway
[ ]	00811	Federal Wage Rate - Building
[ ]	00812	Federal Wage Rate - Heavy
[X]	00820	Wage Rate for Engineering Construction
[ ]	00821	Wage Rate for Building Construction
[ ]	00830	Trench Safety Geotechnical Information
[X]	00840	Pay or Play Program
[ ]	00912	Rider

ARTICLE 8
SIGNATURES

8.1 This Agreement is executed in two original copies and is effective as of the date of countersignature by City Controller.

CONTRACTOR:

By: _____
Name: _____
Title: _____
Date: _____
Tax Identification Number: _____

(If Joint Venture)

By: _____
Name: _____
Title: _____
Date: _____
Tax Identification Number: _____

CITY OF HOUSTON, TEXAS

APPROVED:

By: _____
Director,
Department of Public Works and Engineering

SIGNED:

By: _____
Mayor

COUNTERSIGNED:

By: _____
City Controller

Date Countersigned:

_____

ATTEST/SEAL:

By: _____
City Secretary

8.2 This Contract and Ordinance have been reviewed as to form by the undersigned legal assistant and have been found to meet established Legal Department criteria. Legal Department has not reviewed the content of these documents.

_____ _____
Legal Assistant Date

END OF DOCUMENT

Document 00570

CONTRACTOR'S REVISED MWSBE PARTICIPATION PLAN

As soon as the Contractor becomes aware that the Contractor may not abide by the most current approved Plan, the Contractor shall submit this completed form with a Record of Post-Bid Good Faith Efforts (Document 00571), a Request for Plan Deviation (Document 00572), and any other document evidencing "Good Faith Efforts", as required by the Good Faith Efforts Policy (Document 00808). The City will review this Revised Participation Plan and may approve this Revised Plan if the Contractor has made Good Faith Efforts. For more information, visit http://www.houstontx.gov/obo.

Original Participation Plan Percentage	MBE	WBE	SBE

Revised Participation Plan Percentage	MBE	WBE	SBE

NAICS Code (6 digit)	Description of Work (Plan Sheet #, Unit Price #, Scope of Work #, as applicable)	% of Total Bid Price (2 decimal places)	Cert. Type for Goal (MBE, WBE, SBE)	Certified Firm Name Firm Address Contact Name Phone No. and E-Mail (if available)

Signature for Company: _____* Date: _____
Print Name: _____ Phone: _____

*I understand that supplying inaccurate information may violate Texas Penal Code Section 37.10 and lead to City sanctions.

Document 00570

CONTINUATION PAGE

NAICS Code (6 digit)	Plan Item Number (if applicable)/ Description of Work	% of Total Bid Price (2 decimal places)	Cert. Type for Goal (MBE, WBE, SBE)	Certified Firm Name Firm Address Contact Name Phone No. and E-Mail (if available)

Signature for Company: _____* Date: _____
Print Name: _____ Phone: _____

*I understand that supplying inaccurate information may violate Texas Penal Code Section 37.10 and lead to City sanctions.

Document 00571

RECORD OF POST-AWARD GOOD FAITH EFFORTS

Contractor Name: _____ **Project Name:** _____

A Contractor that may be unable to follow an agreed Participation Plan (Document 00470 or 00570) must submit this completed form, a Plan Deviation Request Form (Document 00572), and any other documentation of "Good Faith Efforts" (see Document 00808) that the OBO Representative may require. The Contractor shall submit one completed Document 00571 (Part A) for each Certified Firm that is no longer performing part or all of its work duties under the Approved Plan. The Contractor has the burden to demonstrate "Good Faith Efforts" to meet the MWSBE goal, which includes correctly and accurately preparing and submitting this form and other efforts described in the Good Faith Efforts Policy (Document 00808). The Office of Business Opportunity may review Participation Plan and Good Faith Efforts from time to time and may request that the Contractor submit this form and other information.

UNLESS THE CONTRACTOR MEETS THE GOALS IN THE AGREED PARTICIPATION PLAN, FAILURE TO SUBMIT THIS FORM MAY RESULT IN A DEFAULT OF THE CONTRACT.

PART A (REASON FOR NON-USE OF CERTIFIED FIRM IN AGREED PLAN)

NAICS Code	Plan Item No.	MWSBE Type for Goal	Certified Firm Name, Address, Phone No. and E-mail	Plan Goal & Actual Use (in % of total)	Method of Contact	Reason for Non-Use (why the Contractor was not able to use the Certified Firm in accordance with the Agreed Plan)
				Plan %: ____ Actual %: ____	Phone ☐ E-mail ☐ Fax ☐	

PART B (REASON FOR NONUSE OF REPLACEMENT CERTIFIED FIRMS—IF APPLICABLE)

NAICS Code	Plan Item No.	MWSBE Type for Goal	Certified Firm Name Address, Phone No. and E-Mail	Certified Firm Contact Person	Method of Contact	Prime Contact Date	Certified Firm Response	Results of Contact (why Certified Firm was unsuitable or unusable)
					Phone ☐ E-mail ☐ Fax ☐			
					Phone ☐ E-mail ☐ Fax ☐			

Authorized Signature: _____ Date: _____ Phone: _____

Print Name: _____ Email Address: _____

Document 00571

PART B CONTINUATION (REASON FOR NONUSE OF REPLACEMENT CERTIFIED FIRMS)

NAICS Code	Plan Item No.	MWSBE Type for Goal	Certified Firm Name Address, Phone No. and E-Mail	Certified Firm Contact Person	Method of Contact	Prime Contact Date	Certified Firm Response	Results of Contact (why Certified Firm was unsuitable or unusable)
					Phone ☐ E-mail ☐ Fax ☐			
					Phone ☐ E-mail ☐ Fax ☐			
					Phone ☐ E-mail ☐ Fax ☐			
					Phone ☐ E-mail ☐ Fax ☐			
					Phone ☐ E-mail ☐ Fax ☐			
					Phone ☐ E-mail ☐ Fax ☐			
					Phone ☐ E-mail ☐ Fax ☐			
					Phone ☐ E-mail ☐ Fax ☐			

Authorized Signature: _____ Date: _____ Phone: _____

Print Name: _____ Email Address: _____

Document 00572

CONTRACTOR'S REQUEST FOR PLAN DEVIATION

Contractor Name:_____

Project Name:_____

	MBE	WBE	SBE	Total
Approved Participation Plan Percentages	%	%	%	%

	MBE	WBE	SBE	Total
Contractor's Requested Participation Plan	%	%	%	%

Justification: Please provide the reason the Contractor is unable to meet the MWSBE goal in the Approved Plan.

_____

_____

_____

Good Faith Efforts: Please list any efforts not listed in Contractor's Record of Good Faith Effort (Document 00571).

_____

_____

_____

_____

Please attach additional pages if the space for Justification or Good Faith Efforts is insufficient.

Date:_____ *Contractor:_____

E-mail: _____ *By:_____

Phone Number: _____ Title:_____

*I understand that the approval of this deviation request does not constitute a final decision by OBO that Contractor has used Good Faith Efforts in meeting the Contracting Goal.

FOR OFFICIAL USE ONLY: Approved ☐ Not Approved ☐

OBO Representative Date:_____

_____ Title: _____

Document 00600

LIST OF PROPOSED SUBCONTRACTORS AND SUPPLIERS

PROJECT NAME: New/Replacement of Water Well – Forest Cove III
TOTAL DBE AWARD: $ _____
ORIG. CONTRACT PRICE: $_____ TOTAL MWSBE AWARD: $ _____
PROJECT NO.: WBS No. S-000100-0016-4 TOTAL HUB AWARD: $ _____
DATE OF REPORT: _____ TOTAL PDBE AWARD: $ _____

NAICS (6 digits)	SUBCONTRACTOR OR SUPPLIER (INCLUDE "MWSBE", "PDBE", "DBE", OR "HUB" DESIGNATION)[2]	ADDRESS	SCOPE OF WORK[3]

NOTES:
1. RETURN FOR ALL PROJECTS AS REQUIRED IN DOCUMENT 00800 – SUPPLEMENTARY CONDITIONS. RETURN WITHIN THE SPECIFIED NUMBER OF DAYS AFTER RECEIPT OF NOTICE OF INTENT TO AWARD
2. DESIGNATE FIRMS CERTIFIED BY THE CITY OFFICE OF BUSINESS OPPORTUNITY ON THIS FORM.
3. DESCRIBE THE WORK TO BE PERFORMED, FOR WHICH THE FIRM IS CERTIFIED, SUCH AS "PAVING", "ELECTRICAL", ETC.
4. **CONTRACTOR SHALL EXECUTE CONTRACTS WITH APPROVED SUBCONTRACTORS AND SUPPLIERS WITHIN 30 DAYS AFTER THE DATE OF THE NOTICE TO PROCEED. COPIES OF CONTRACTS WITH DESIGNNATED FIRMS MUST BE SENT TO THE OFFICE OF BUSINESS OPPORTUNITY.**

SIGNATURE: _____ COMPANY NAME: _____

NAME: _____ TITLE: _____
(Type or Print)

LIST OF PROPOSED SUBCONTRACTORS AND SUPPLIERS

Document 00600

Continuation Page

PROJECT NAME: New/Replacement of Water Well – Forest Cove III
DATE OF REPORT: _____
PROJECT NO.: WBS No. S-000100-0016-4

NAICS (6 digits)	SUBCONTRACTOR OR SUPPLIER (INCLUDE "MWSBE", "PDBE", "DBE", OR "HUB" DESIGNATION)[2]	ADDRESS	SCOPE OF WORK[3]

SIGNATURE: _____ COMPANY NAME: _____

NAME: _____ TITLE: _____
(Type or Print)

END OF DOCUMENT

Document 00601

DRUG POLICY COMPLIANCE AGREEMENT

I, _____ _____
Name Title

of _____
Contractor

have authority to bind Contractor with respect to its Bid, Proposal, or performance of any and all contracts it may enter into with the City of Houston; and that by making this Agreement, I affirm that Contractor is aware of and by the time the Contract is awarded will be bound by and agree to designate appropriate safety impact positions for company employee positions, and to comply with the following requirements before the City issues a Notice to Proceed:

1. Develop and implement a written Drug Free Workplace Policy and related drug testing procedures for Contractor that meet the criteria and requirements established by the Mayor's Amended Policy on Drug Detection and Deterrence (Mayor's Drug Policy) and the Mayor's Drug Detection and Deterrence Procedures for Contractors (Executive Order No. 1-31).

2. Obtain a facility to collect urine samples consistent with Health and Human Services (HHS) guidelines and an HHS-certified drug-testing laboratory to perform drug tests.

3. Monitor and keep records of drug tests given and results; and upon request from the City of Houston, provide confirmation of such testing and results.

4. Submit semi-annual Drug Policy Compliance Declarations.

I affirm on behalf of Contractor that full compliance with the Mayor's Drug Policy and Executive Order No. 1-31 is a material condition of the Contract with the City of Houston,

I further acknowledge that falsification, failure to comply with or failure to timely submit declarations or documentation in compliance with the Mayor's Drug Policy or Executive Order No. 1-31 will be considered a breach of the Contract with the City and may result in non-award or termination of the Contract by the City.

_____ _____
Contractor Title

_____ _____
Signature Date

END OF DOCUMENT

Document 00604

HISTORY OF OSHA ACTIONS AND LIST OF ON-THE-JOB INJURIES

Prior to award of the Contract, Low Bidder will be required to file the following with the City:

1. A history of all OSHA actions, advisories, etc., Contractor has received on all jobs worked in any capacity, prime or subcontractor. The history shall be for the two-year period preceding the Bid Date of the Project.

2. A list of all on-the-job injuries, accidents, and fatalities suffered by any present or former employees of Contractor during the same two-year period.

3. If less than the two-year period, give the date Contractor started doing business.

This information must be submitted to the City within the time period stated in Document 00498 - Notice of Intent to Award. An officer of the company must certify in a notarized statement that the information submitted is true and correct.

END OF DOCUMENT

Document 00605

LIST OF SAFETY IMPACT POSITIONS

****

Contractor is to provide a complete List of Employee Classifications that are considered in a "Safety Impact Position" and the number of employees in each of those classifications.

****

Employee Classification	**Number of Employees**

END OF DOCUMENT

Document 00606

CONTRACTOR'S CERTIFICATION OF NO SAFETY IMPACT POSITIONS IN PERFORMANCE OF A CITY CONTRACT

BEFORE ME, the undersigned authority, on this day personally appeared

_____,
Affiant

who being by me duly sworn on his oath stated that he is _____
Title

of _____
Contractor

and that no employee safety impact positions, as defined in §5.17 of Executive Order No. 1-31, will be involved in performing _____.
Project

Contractor agrees and covenants that it shall immediately notify the City of Houston Director of Personnel if any safety impact positions are established to provide services in performing this City Contract.

_____
Affiant's Signature

SWORN AND SUBSCRIBED before me on this day of _____, 20___.

_____
Notary Public in and for the State of TEXAS

_____
Print or Type Notary Public Name

My Commission Expires: _____
Expiration Date

END OF DOCUMENT

Document 00610

PERFORMANCE BOND

THAT WE, _____, as Principal, (the "Contractor"), and the other subscriber hereto, _____, as Surety, do hereby acknowledge ourselves to be held and firmly bound to the City of Houston (the "City"), a municipal corporation, in the penal sum of $_____ for the payment of which sum, well and truly to be made to the City, its successors and assigns, Contractor and Surety do bind themselves, their heirs, executors, administrators, successors and assigns, jointly and severally.

THE CONDITIONS OF THIS OBLIGATION ARE SUCH THAT:

WHEREAS, the Contractor has on or about this day executed a Contract in writing with the City for _____

_____,

all of such work to be done as set out in full in said Contract documents therein referred to and adopted by the City Council, all of which are made a part of this instrument as fully and completely as if set out in full herein.

NOW THEREFORE, if the said Contractor shall faithfully and strictly perform the Contract in all its terms, provisions, and stipulations in accordance with its true meaning and effect, and in accordance with the Contract documents referred to therein and shall comply strictly with each and every provision of the Contract and with this Bond, then this obligation shall become null and void and shall have no further force and effect; otherwise the same is to remain in full force and effect. Should the Contractor fail to faithfully and strictly perform the Contract in all its terms, including but not limited to the indemnifications thereunder, the Surety shall be liable for all damages, losses, expenses and liabilities that the City may suffer in consequence thereof, as more fully set forth herein.

It is further understood and agreed that the Surety does hereby relieve the City or its representatives from the exercise of any diligence whatever in securing compliance on the part of the Contractor with the terms of the Contract, and the Surety agrees that it shall be bound to take notice of and shall be held to have knowledge of all acts or omissions of the Contractor in all matters pertaining to the Contract. The Surety understands and agrees that the provision in the Contract that the City will retain certain amounts due the Contractor until the expiration of 30 days from the acceptance of the Work is intended for the City's benefit, and the City will have the right to pay or withhold such retained amounts or any other amount owing under the Contract without changing or affecting the liability of the Surety hereon in any degree.

It is further expressly agreed by Surety that the City or its representatives are at liberty at any time, without notice to the Surety, to make any change in the Contract documents and in the Work to be done thereunder, as provided in the Contract, and in the terms and conditions thereof, or to make any change in, addition to, or deduction from the Work to be done thereunder; and that such changes, if made, shall not in any way vitiate the obligation in this Bond and undertaking or release the Surety therefrom.

It is further expressly agreed and understood that the Contractor and Surety will fully indemnify and save harmless the City from any liability, loss, cost, expense, or damage arising out of Contractor's performance of the Contract.

If the City gives Surety notice of Contractor's default, Surety shall, within 45 days, take one of the following actions:

1. Arrange for Contractor, with consent of the City, to perform and complete the Contract; or

2. Take over and assume completion of the Contract itself, through its agents or through independent contractors, and become entitled to the payment of the balance of the Contract Price.

If the Surety fails to take either of the actions set out above, it shall be deemed to have waived its right to perform and complete the Contract and receive payment of the balance of the Contract Price and the City shall be entitled to enforce any remedies available at law, including but not limited to completing the Contract itself and recovering any cost in excess of the Original Contract Price from the Surety.

This Bond and all obligations created hereunder shall be performable in Harris County, Texas. This Bond is given in compliance with the provisions of Chapter 2253, Texas Government Code, as amended, which is incorporated herein by this reference.

Notices required or permitted hereunder shall be in writing and shall be deemed delivered when actually received or, if earlier, on the third day following deposit in a United States Postal Service post office or receptacle, with proper postage affixed (certified mail, return receipt requested), addressed to the respective other Party at the address prescribed in the Contract documents, or at such other address as the receiving party may hereafter prescribe by written notice to the sending party.

IN WITNESS THEREOF, the said Contractor and Surety have signed and sealed this instrument on the respective dates written below their signatures and have attached current Power of Attorney.

ATTEST, SEAL: (if a corporation)
WITNESS: (if not a corporation)

_____
Name of Contractor

By: _____
Name:
Title:

By: _____
Name:
Title:
Date:

ATTEST/SURETY WITNESS:

(SEAL)

_____
Full Name of Surety

_____
Address of Surety for Notice

_____

_____
Telephone Number of Surety

By: _____
Name:
Title:
Date:

By: _____
Name:
Title: Attorney-in-Fact
Date:

This Ordinance or Contract has been reviewed as to form by the undersigned legal assistant and have been found to meet established Legal Department criteria. The Legal Department has not reviewed the content of these documents.

_____ _____
Legal Assistant Date

END OF DOCUMENT

Document 00611

STATUTORY PAYMENT BOND

THAT WE, _____, as Principal, hereinafter called Contractor and the other subscriber hereto, _____, as Surety, do hereby acknowledge ourselves to be held and firmly bound unto the City of Houston, a municipal corporation, in the sum of $_____ for the payment of which sum, well and truly to be made to the City of Houston, and its successors, the said Contractor and Surety do bind themselves, their heirs, executors, administrators, successors, jointly and severally.

THE CONDITIONS OF THIS OBLIGATION ARE SUCH THAT:

WHEREAS, the Contractor has on or about this day executed a contract in writing with the City of Houston for _____

_____,

all of such work to be done as set out in full in said Contract documents therein referred to and adopted by the City Council, all of which are made a part of this instrument as fully and completely as if set out in full herein;

NOW, THEREFORE, if the said Contractor shall pay all claimants supplying labor and materials to him or a Subcontractor in the prosecution of the Work provided for in the Contract, then, this obligation shall be void; otherwise the same is to remain in full force and effect;

PROVIDED HOWEVER, that this Bond is executed pursuant to the provisions of Chapter 2253, Texas Government Code, as amended, and all liabilities on this Bond shall be determined in accordance with the provisions of said Article to the same extent as if it were copied at length herein.

IN WITNESS THEREOF, the said Contractor and Surety have signed and sealed this instrument on the respective dates written below their signatures and have attached current Power of Attorney.

ATTEST, SEAL: (if a corporation)
WITNESS: (if not a corporation)

_____
Name of Contractor

By: _____
Name:
Title:

By: _____
Name:
Title:
Date:

ATTEST/SURETY WITNESS:

(SEAL)

_____
Full Name of Surety

_____
Address of Surety for Notice

_____

_____
Telephone Number of Surety

By: _____
Name:
Title:
Date:

By: _____
Name:
Title: Attorney-in-Fact
Date:

This Ordinance or Contract has been reviewed as to form by the undersigned legal assistant and have been found to meet established Legal Department criteria. The Legal Department has not reviewed the content of these documents.

_____
Legal Assistant

_____
Date

END OF DOCUMENT

Document 00612

ONE-YEAR MAINTENANCE BOND

THAT WE, _____, as Principal, hereinafter called Contractor, and the other subscriber hereto, _____, as Surety, do hereby acknowledge ourselves to be held and firmly bound to the City of Houston, a municipal corporation, in the sum of $_____, for the payment of which sum well and truly to be made to the City of Houston and its successors, the said Contractor and Surety do bind themselves, their heirs, executors, administrators, successors, jointly and severally.

THE CONDITIONS OF THIS OBLIGATION ARE SUCH THAT:

WHEREAS, the Contractor has on or about this day executed a Contract in writing with the City of Houston for _____

_____,

all of such work to be done as set out in full in said Contract documents therein referred to and adopted by the City Council, all of which are made a part of this instrument as fully and completely as if set out in full herein.

NOW THEREFORE, if the said Contractor shall comply with the provisions of Paragraph 11.5.1 of the General Conditions, and correct work not in accordance with the Contract documents discovered within the established one-year period, then this obligation shall become null and void, and shall be of no further force and effect; otherwise, the same is to remain in full force and effect.

Notices required or permitted hereunder shall be in writing and shall be deemed delivered when actually received or, if earlier, on the third day following deposit in a United States Postal Service post office or receptacle, with proper postage affixed (certified mail, return receipt requested), addressed to the respective other party at the address prescribed in the Contract documents, or at such other address as the receiving party may hereafter prescribe by written notice to the sending party.

IN WITNESS THEREOF, the said Contractor and Surety have signed and sealed this instrument on the respective dates written below their signatures and have attached current Power of Attorney.

ATTEST, SEAL: (if a corporation)
WITNESS: (if not a corporation)

_____
Name of Contractor

By: _____
Name:
Title:

By: _____
Name:
Title:
Date:

ATTEST/SURETY WITNESS:

(SEAL)

_____
Full Name of Surety

_____
Address of Surety for Notice

_____

_____
Telephone Number of Surety

By: _____
Name:
Title:
Date:

By: _____
Name:
Title: Attorney-in-Fact
Date:

This Ordinance or Contract has been reviewed as to form by the undersigned legal assistant and have been found to meet established Legal Department criteria. The Legal Department has not reviewed the content of these documents.

_____
Legal Assistant

_____
Date

END OF DOCUMENT

Document 00620

AFFIDAVIT OF INSURANCE

BEFORE ME, the undersigned authority, on this day personally appeared

_____, who
Affiant

being by me duly sworn on his oath stated that he is _____, of
Title

_____,
Contractor's Company Name

the Contractor named and referred to within the Contract documents; that he is fully competent and authorized to give this affidavit and that the attached original insurance certificate truly and accurately reflects the insurance coverage that is now available and will be available during the term of the Contract.

_____
Affiant's Signature

SWORN AND SUBSCRIBED before me on _____.
Date

_____
Notary Public in and for the State of TEXAS

_____
Print or type Notary Public name

My Commission Expires: _____
Expiration Date

END OF DOCUMENT

Document 00624

AFFIDAVIT OF COMPLIANCE WITH AFFIRMATIVE ACTION PROGRAM

BEFORE ME, the undersigned authority, on this day personally appeared _____, who
Affiant

being by me duly sworn on his oath stated that he is _____,
Title

of _____,
Contractor

the Contractor named and referred to within the Contract documents; that he is fully competent and authorized to give this affidavit and that the Contract is in compliance with the Affirmative Action Program of the City and has done all that is required by the Contract documents, the Affirmative Action Program, and pursuant to Chapter 15, Code of Ordinances, City of Houston, §15.16 et seq.

_____
Affiant's Signature

SWORN AND SUBSCRIBED before me on this day of _____, 20___.

_____
Notary Public in and for the State of TEXAS

_____
Print or Type Notary Public Name

My Commission Expires: _____
Expiration

END OF DOCUMENT

Document 00630
(POP-2)
City of Houston
Certification of Compliance with
Pay or Play Program

Contractor Name: _____ $ _____
(Contractor/Subcontractor) *(Amount of Contract)*

Contractor Address: _____

Project No.: «WBSNo» _____

Project Name: «LegalPrjName» _____

POP Liaison Name: _____

In accordance with the City of Houston Pay or Play Program authorized by Ordinance 2007-534 and Executive Order 1-7, Contractor/Subcontractor agrees to abide by the terms of this Program. This certification is required of all contractors for contracts subject to the program. You must agree EITHER to PAY or to PLAY for all covered employees. The Contractor/Subcontractor may also Pay on behalf of some covered employees and Play on behalf of other covered employees.

The Contractor/Subcontractor will comply with all provisions of the Pay or Play Program and will furnish all information and reports requested to determine compliance with program requirements of the Pay or Play Program (See Executive Order 1-7 for the terms of the Pay or Play program) The criteria of the program is as follows:

The Contractor/Subcontractor agrees to **"Pay"** $1.00 per hour for work performed by covered employees under the contract with the City. If independent contract labor is utilized the Contractor/Subcontractor agrees to report hours worked by the independent contract laborer and pay $1.00 per hour for work performed.

Otherwise the Contractor/Subcontractor agrees to **"Play"** by providing health benefits to each covered employee. The health benefits must meet the following criteria:

1. The employer will contribute no less than $150 per employee per month toward the total premium cost for single coverage only; and
2. The employee contribution, if any amount, will be no greater than 50% of the total premium cost and no more than $150 per month.
3. Pursuant to E.O. 1-7 section 4.04 a contractor is deemed to have complied with respect to a covered employee who is not provided health benefits if the employee refuses the benefits and the employee's contribution to the premium is no more than $40 per month.

Please select whether you choose to:	Pay	Play	Both

The Contractor/Subcontractor will file compliance reports with the City, which will include activity for covered employees subject to the program, in the form and to the extent requested by the administering department. Compliance reports shall contain information including, but not limited to, documentation showing employee health coverage and employee work records.
Note: The Contractor is responsible to the City for the compliance of covered employees of covered subcontractors and only forms that are accurate and complete will be accepted.

***Estimated Number of:**	**Prime Contractor**	**Sub-Contractor**
Total Employees on City Job		
Covered Employees		
Non-Covered Employees		
Exempt Employees		

***Required**

I hereby certify that the above information is true and correct.

_____ _____
Contractor ***(Signature)*** Date

_____
Name and Title ***(Print or type)***

Document 00631
(POP-3)
City of Houston
Pay or Play Program
List of Subcontractors

Prime Contractor: _____
Project Number/Description: _____
_____

POP Contact Person: _____
Address: _____
_____
Email: _____
Phone: _____

Note: Include ALL subcontractors (use additional form if necessary)

			Check One							
Subcontractor Name	Supplier Y/N?	Amount of Subcontract	Pay	Play	Both (Pay and Play)	N/A	Contact Person	Phone	Email Address	Mailing Address

*If the above information is found to be submitted fraudulently with the intent to bypass or deceive the purpose of the Pay or Play Program the contractor will be held liable for all compliance requirements from the inception of the contract. All subcontracts that surpass the $200,000.00 threshold will be responsible for Pay or Play compliance from the inception of the contract.

Affidavit

I hereby solemnly affirm, certify and confirm that the total sub-contract value stated above is the final value of the contract (*) including all material costs, fuel, payroll, taxes, fees, profit sharing, labor or any payments in relation to the contracted work and no separate payment or contract has been made for the sub-contract under contract no._____. The above sub-contract value includes all the costs related to work under the contract. The contractor and sub-contractor(s) agree to inform The Mayor's Office of Business Opportunity of any related cost(s) added to the contracted work and re-submit POP-3 with the current value of the sub-contract. I understand that compliance with "Pay or Play" program is mandatory and nothing has been hidden to circumvent the program requirements.

_____
Contractor Authorized Representative & Title Date
Name & Signature

Document 00642

MONTHLY SUBCONTRACTOR PAYMENT REPORTING FORM

Legal Project Name:_____

Outline Agreement No.:_____ WBS No.:_____

Contractor's Company Name: _____

Address: _____

CERTIFICATION

_____, Contractor's Representative for the above referenced Contract, hereby certifies that (1) Contractor has paid all subcontractors, except those noted below, (2) Contractor made such payments (a) in proportion to the amount City paid Contractor and (b) in accordance and compliance with all applicable Contract Documents and laws; and (3) Contractor withheld no sums from any subcontractor for allegations of deficiency in Work. The term "subcontractor", as used herein, includes all persons or firms furnishing work, materials, services or equipment Contractor ordered incorporated into Work or placed near the Project for which the City made partial payment.

EXCEPTION: Contractor sent Payment Notifications to the following subcontractors explaining why Contractor withheld payment. Copies are attached.

Subcontractor Name:_____	Subcontractor Name: _____
Street Address: _____	Street Address: _____
City, State, and Zip Code: _____	City, State, and Zip Code: _____
Amount of Payment Withheld:_____	Amount of Payment Withheld: _____
Date Payment First Withheld: _____	Date Payment First Withheld: _____
Description of Good Faith Reason:_____	Description of Good Faith Reason:_____
_____	_____

_____
(Signature of Contractor's Representative)

_____
(Print or Type Name of Contractor's Representative)

SWORN TO AND SUBSCRIBED before me on: _____
Date

_____
Notary Public in and for the State of Texas

My Commission Expires: _____
Expiration Date

_____
Print or Type Name of Notary Public

Document 00646

PAYMENT NOTIFICATION – EXPLANATION OF WITHHOLDING

Legal Project Name:_____

Outline Agreement No.:_____ WBS No.:_____

Contractor's Company Name: _____

Address: _____

Date: _____

SUBCONTRACTOR PAYMENT INFORMATION:

Subcontractor Name:_____

Street Address: _____

City, State, and Zip Code: _____

Business Phone Number: _____

Amount of Subcontractor Invoice: _____

Amount of Payment Made: _____

Amount of Payment Withheld:_____

Date Payment First Withheld: _____

DETAILED EXPLANATION OF WITHHOLDING: _____

_____

_____

_____

_____

_____ _____

(Signature of Contractor's Representative) (Print or Type Name of Contractor's Representative)

Document 00700

GENERAL CONDITIONS

August 15, 2015 EDITION

TABLE OF ARTICLES

1. GENERAL PROVISIONS
2. THE CITY
3. CONTRACTOR
4. ADMINISTRATION OF THE CONTRACT
5. SUBCONTRACTORS AND SUPPLIERS
6. CONSTRUCTION BY THE CITY OR BY SEPARATE CONTRACTORS
7. CHANGES IN THE WORK
8. TIME
9. PAYMENTS AND COMPLETION
10. SAFETY PRECAUTIONS
11. INSURANCE AND BONDS
12. UNCOVERING AND CORRECTION OF THE WORK
13. MISCELLANEOUS PROVISIONS
14. TERMINATION OR SUSPENSION OF THE CONTRACT

ARTICLE 1 - GENERAL PROVISIONS 3

1.1 DEFINITIONS 3
1.2 EXECUTION, CORRELATION, AND INTENT 5
1.3 OWNERSHIP AND USE OF DOCUMENTS 6
1.4 INTERPRETATION 6

ARTICLE 2 - THE CITY 6

2.1 LIMITATIONS OF THE CITY'S OFFICERS AND EMPLOYEES 6
2.2 DUTIES OF THE CITY 6
2.3 AVAILABILITY OF LAND AND USE OF SITE 6
2.4 THE CITY'S RIGHT TO STOP THE WORK 7
2.5 THE CITY'S RIGHT TO CARRY OUT WORK 7

ARTICLE 3 - CONTRACTOR 7

3.1 RESPONSIBILITIES 7
3.2 REVIEW OF CONTRACT AND FIELD CONDITIONS BY CONTRACTOR 7
3.3 SUPERVISION AND CONSTRUCTION PROCEDURES 7
3.4 SUPERINTENDENT 8
3.5 LABOR 8
3.6 PREVAILING WAGE RATES 9
3.7 LABOR CONDITIONS 9
3.8 DRUG DETECTION AND DETERRENCE 9
3.9 MATERIALS & EQUIPMENT 10
3.10 PRODUCT OPTIONS AND SUBSTITUTIONS 10
3.11 CASH ALLOWANCES 11
3.12 WARRANTY 11
3.13 TAXES 12
3.14 PERMITS, FEES, AND NOTICES 12
3.15 CONSTRUCTION SCHEDULES 12
3.16 DOCUMENTS AND SAMPLES AT THE SITE 12
3.17 MANUFACTURER'S SPECIFICATIONS 12
3.18 SHOP DRAWINGS, PRODUCT DATA, AND SAMPLES 13
3.19 CULTURAL RESOURCES AND ENDANGERED SPECIES 13
3.20 CUTTING AND PATCHING 14
3.21 CLEANING 14
3.22 SANITATION 14
3.23 ACCESS TO WORK AND TO INFORMATION 14
3.24 TRADE SECRETS 14
3.25 INDEMNIFICATION 14
3.26 RELEASE AND INDEMNIFICATION – PATENT, COPYRIGHT, TRADEMARK, AND TRADE SECRET INFRINGEMENT 15
3.27 INDEMNIFICATION PROCEDURES 15
3.28 CONTRACTOR DEBT 156

ARTICLE 4 - ADMINISTRATION OF THE CONTRACT 16

4.1 CONTRACT ADMINISTRATION 16
4.2 COMMUNICATIONS IN ADMINISTRATION OF THE CONTRACT 17
4.3 CLAIMS AND DISPUTES 17
4.4 RESOLUTION OF CLAIMS AND DISPUTES 18
4.5 CONDITION PRECEDENT TO SUIT; WAIVER OF ATTORNEYFEES AND INTEREST 18
4.6 INTERIM PAYMENT WAIVER & RELEASE 18

ARTICLE 5 - SUBCONTRACTORS AND SUPPLIERS 19

5.1 AWARD OF SUBCONTRACTS OTHER CONTRACTS FOR PORTIONS OF THE WORK 19
5.2 CONTRACTOR RESPONSIBILITY FOR SUBCONTRACTORS 19

ARTICLE 6 - CONSTRUCTION BY THE CITY OR BY SEPARATE CONTRACTORS 19

6.1 THE CITY'S RIGHT TO PERFORM CONSTRUCTION AND TO AWARD SEPARATE CONTRACTS 19
6.2 COORDINATION 19
6.3 MUTUAL RESPONSIBILITY 20
6.4 THE CITY'S RIGHT TO CLEAN UP 20

ARTICLE 7 - CHANGES IN THE WORK 20

7.1 CHANGES 20
7.2 WORK CHANGE DIRECTIVES 20
7.3 ADJUSTMENTS IN CONTRACT PRICE 21
7.4 MINOR CHANGES IN THE WORK 22

ARTICLE 8 - TIME 22

8.1 PROGRESS AND COMPLETION 22
8.2 DELAYS AND EXTENSIONS OF TIME 22

ARTICLE 9 - PAYMENTS AND COMPLETION 23

9.1 UNIT PRICE WORK 23
9.2 ESTIMATES FOR PAYMENT, UNIT PRICE WORK 23
9.3 STIPULATED PRICE WORK 24
9.4 APPLICATIONS FOR PAYMENT, STIPULATED PRICE WORK 24
9.5 CERTIFICATES FOR PAYMENT 24
9.6 COMPUTATIONS OF CERTIFICATES FOR PAYMENT 24
9.7 DECISIONS TO WITHHOLD CERTIFICATION 24
9.8 PROGRESS PAYMENTS 25
9.9 DATE OF SUBSTANTIAL COMPLETION 25
9.10 PARTIAL OCCUPANCY OR USE 26
9.11 FINAL COMPLETION AND FINAL PAYMENT 26

9.12 LIQUIDATED DAMAGES..... 27

ARTICLE 10 - SAFETY PRECAUTIONS..... 27

10.1 SAFETY PROGRAMS..... 27
10.2 POLLUTANTS AND POLLUTANT FACILITIES..... 28
10.3 SAFETY OF THE ENVIRONMENT, PERSONS, AND PROPERTY..... 28
10.4 EMERGENCIES..... 28

ARTICLE 11 - INSURANCE AND BONDS..... 28

11.1 GENERAL INSURANCE REQUIREMENTS..... 28
11.2 INSURANCE TO BE PROVIDED BY CONTRACTOR..... 29
11.3 PROOF OF INSURANCE..... 32
11.4 PERFORMANCE AND PAYMENT BONDS..... 33
11.5 MAINTENANCE BONDS..... 33
11.6 SURETY..... 33
11.7 DELIVERY OF BONDS..... 344

ARTICLE 12 - UNCOVERING AND CORRECTION OF THE WORK..... 344

12.1 UNCOVERING OF THE WORK..... 34
12.2 CORRECTION OF THE WORK..... 34
12.3 ACCEPTANCE OF NONCONFORMING WORK..... 34

ARTICLE 13 - MISCELLANEOUS PROVISIONS..... 34

13.1 GOVERNING LAWS..... 34
13.2 SUCCESSORS..... 345
13.3 BUSINESS STRUCTURE AND ASSIGNMENTS . 355
13.4 WRITTEN NOTICE..... 35
13.5 RIGHTS AND REMEDIES..... 35
13.6 TESTS AND INSPECTIONS..... 35
13.7 INTEREST..... 35
13.8 PARTIES IN INTEREST..... 36
13.9 ENTIRE CONTRACT..... 36
13.10 WRITTEN AMENDMENT..... 36
13.11 COMPLIANCE WITH LAWS..... 36
13.12 SEVERABILITY..... 36

ARTICLE 14 - TERMINATION OR SUSPENSION OF THE CONTRACT..... 36

14.1 TERMINATION BY THE CITY FOR CAUSE..... 36
14.2 TERMINATION BY THE CITY FOR CONVENIENCE..... 37
14.3 SUSPENSION BY THE CITY FOR CONVENIENCE..... 37
14.4 TERMINATION BY CONTRACTOR..... 38

ARTICLE 1 - GENERAL PROVISIONS

1.1 DEFINITIONS

1.1.1 Agreement: Document signed by the Parties and binding the Parties, containing the name of Contractor, title and location of the Project, Original Contract Time, Original Contract Price, enumeration of documents included in the Contract, and other provisions.

1.1.2 Bonds: Performance Bond, Payment Bond, Maintenance Bond, and other Surety instruments executed by Surety. When in singular form, refers to individual instrument.

1.1.3 Business Enterprise: Any business entity registered in a program authorized by 49 C.F.R. § 26 (where applicable) or City Code of Ordinances, Chapter 15, Article II, relating to Equal Opportunity Employment and taking affirmative action to ensure that applicants are employed and employees are treated without regard to race, religion, color, sex, national origin, or age. The term "Business Enterprise" may include any Disadvantaged Business Enterprise ("DBE"), Minority Business Enterprise ("MBE"), Woman Business Enterprise ("WBE"), Small Business Enterprise ("SBE"), Person with Disability Enterprise ("PDBE"), and any Historically Underutilized Business ("HUB").

1.1.4 Business Enterprise Policy: Contract documents and applicable policies relating to Business Enterprises and authorized under 49 C.F.R. § 26 or City Code of Ordinances, Chapter 15, Article II.

1.1.5 Cash Allowance: An estimated sum of money to be used only for a limited class of expenditures such as utility relocation costs, fees for special licenses or permits, or other "pass-through" costs that would be the same for any contractor. Cash Allowances may not be used to purchase goods or services that are not specified in the Contract. The unspecified items must be purchased according to the terms of Article 7.

1.1.6 Change Order: Written instrument prepared by the City and signed by City Engineer and Contractor, specifying the following:

1.1.6.1 a change in the Work;
1.1.6.2 a change in Contract Price, if any; and
1.1.6.3 a change in Contract Time, if any.

The value of a Change Order is the net amount after offsetting all deductions against all additions effected by the Change Order.

1.1.7 City: The City of Houston, a home rule municipality located principally within Harris County, Texas, including its successors and its authorized representatives.

1.1.8 City Engineer: The City Engineer, or the City employee representing the City Engineer, designated in the Agreement and authorized to represent the City, or successors.

1.1.9 Claim: Written demand or written assertion by one Party seeking adjustment of the Contract, payment of money, extension of time, or other relief under the Contract and includes, but is not limited to, claims for materials, labor, equipment, delay, changes, adjustments, substitutions, fees and third party claims. The Party making the Claim has the responsibility to substantiate the Claim.

1.1.10 Conditions of the Contract: General Conditions and Supplementary Conditions.

1.1.11 Construction Manager: Person or firm under contract with the City as its authorized representative to oversee and administer construction of the Work, and who may perform the role of Project Manager and Inspector, as designated by City Engineer in writing.

1.1.12 Contract: The Agreement; documents enumerated in and incorporated into the Agreement, Modifications, and amendments.

1.1.13 Contract Price: The monetary amount stated in the Agreement adjusted by Change Order, and increases or decreases in Unit Price Quantities, if any.

1.1.14 Contract Time: The number of days stated in the Agreement to substantially complete the Work, plus days authorized by Change Order.

1.1.15 Contractor: Person or firm identified as such in the Agreement including its successors and its authorized representatives.

1.1.16 Date of Commencement of the Work: Date established in Notice to Proceed on which Contract Time will commence. This date will not be changed by failure of Contractor, or persons or entities for whom Contractor is responsible, to act.

1.1.17 Date of Substantial Completion: Date that construction, or portion thereof designated by City Engineer, is certified by City Engineer to be substantially complete.

1.1.18 Design Consultant: Person or firm, under contract with the City, to provide professional services during construction and its authorized representatives. If a Design Consultant is not employed for services during construction, Project Manager will perform duties of Design Consultant designated in the Contract in addition to usual duties of Project Manager.

1.1.19 Drawings: Graphic and pictorial portions of the Contract that define the character and scope of the Work.

1.1.20 Extra Unit Price: Unit Prices, which may be required for completion of the Work. These Unit Prices and Unit Price Quantities are in the Contract and are included in Original Contract Price.

1.1.21 Furnish: To supply, pay for, deliver to the site, and unload.

1.1.22 General Requirements: The sections of Division 01 Specifications that specify administrative and procedural requirements and temporary facilities required for the Work.

1.1.23 Inspector: City's employee or agent authorized to assist with inspection of the Work.

1.1.24 Install: Unpack, assemble, erect, place, anchor, apply, work to dimension, finish, cure, clean, protect, and similar operations.

1.1.25 Legal Holiday: Day established by the City Council as a holiday.

1.1.26 Major Unit Price Work: An individual Unit Price item,

1.1.26.1 whose value is greater than five percent of Original Contract Price,

1.1.26.2 whose value becomes greater than five percent of Original Contract Price as the result of an increase in quantity, or

1.1.26.3 whose value is $100,000, whichever is least.

1.1.27 Minor Change in the Work: A written change in the Work, ordered by City Engineer, that does not change Contract Price or Contract Time, and that is consistent with the general scope of the Contract.

1.1.28 Modification: Change Order, Work Change Directive, or Minor Change in the Work.

1.1.29 Notice of Noncompliance: A written notice by City Engineer to Contractor regarding defective or nonconforming work that does not meet the Contract requirements, and that establishes a time by which Contractor shall correct the defective or nonconforming work.

1.1.30 Notice to Proceed: A written notice by City Engineer to Contractor establishing Date of Commencement of the Work.

1.1.31 Office of Business Opportunity: any reference to, or use of, the "Office of Affirmative Action" shall mean the Office of Business Opportunity, or any such future name to which it is changed.

1.1.32 Original Contract Price: The monetary amount originally stated in the Agreement.

1.1.33 Parties: Contractor and the City. When in singular form, refers to Contractor or the City.

1.1.34 Pollutant: Any materials subject to the Texas Solid Waste Disposal Act.

1.1.35 Pollutant Facility: Any facility regulated by the State of Texas to protect the health and environment from contamination by Pollutants, including without limitation, landfills, oil and gas production and storage facilities, wastewater facilities, waste injection wells, and storage tanks (including drums).

1.1.36 Product: Materials, equipment, or systems incorporated into the Work or to be incorporated into the Work.

1.1.37 Product Data: Illustrations, standard schedules, performance charts, instructions, brochures, diagrams, and other information furnished by Contractor to illustrate a Product.

1.1.38 Project: Total construction, of which the Work performed under the Contract may be the whole or a part, and which may include construction by the City or by separate contractors.

1.1.39 Project Manager: City Engineer's authorized representative for administration of the Work. Titles used within the City's departments may be different than those used in this definition.

1.1.40 Provide: Furnish and Install, complete, ready for intended use.

1.1.41 Samples: Physical examples that illustrate Products, or workmanship, and establish standards by which the Work is judged.

1.1.42 Shop Drawings: Drawings, diagrams, schedules, and other data specially prepared for the Work by Contractor, Subcontractor or Supplier, to illustrate a portion of the Work.

1.1.43 Specifications: Divisions 01 through 16 of the documents that are incorporated into the Agreement, consisting of written General Requirements and requirements for Products, standards, and workmanship for the Work, and performance of related services.

1.1.44 Stipulated Price: Single lump sum amount stated in the Contract for completion of the Work, or for designated portion of the Work.

1.1.45 Subcontractor: Person or firm that has direct or indirect contract with Contractor or with another Subcontractor to perform a portion of the Work and its authorized representatives.

1.1.46 Superintendent: Employee of Contractor having authority and responsibility to act for and represent Contractor.

1.1.47 Supplementary Conditions: Part of Conditions of the Contract that amends or supplements General Conditions.

1.1.48 Supplier: Manufacturer, distributor, materialman, or vendor having a direct agreement with Contractor or Subcontractor for Products, or services and its authorized representatives.

1.1.49 Surety: Corporate entity that is bound by one or more Bonds, and is responsible for completion of the Work, including the correction period, and for payment of debts incurred in fulfilling the Contract. Surety shall include co-surety or reinsurer, as applicable.

1.1.50 Underground Facilities: Pipes, conduits, ducts, cables, wires, manholes, vaults, tanks, tunnels, or other such facilities or attachments and encasements containing such facilities that exist below ground level.

1.1.51 Unit Price: An amount stated in the Contract for an individual, measurable item of work, which, when multiplied by actual quantity incorporated into the Work, amounts to full compensation for completion of the item, including work incidental to it.

1.1.52 Unit Price Quantities: Quantities indicated in the Contract that are approximations made by the City for contracting purposes.

1.1.53 Work: Entire construction required by the Contract, including all labor, Products, and services provided by Contractor to fulfill Contractor's obligations. The Work may constitute the whole or a portion of the Project.

1.1.54 Work Change Directive: A written change in the Work, ordered by City Engineer, that is within the general scope of the Contract and consisting of additions, deletions, or other revisions. A Work Change Directive will state proposed basis for adjustment, if any, in Contract Price or Contract Time, or both.

1.2 EXECUTION, CORRELATION, AND INTENT

1.2.1 Execution of the Contract by Contractor is conclusive that Contractor has visited the Work site, become familiar with local conditions under which the Work will be performed, and fully informed itself as to conditions and matters which can affect the Work or costs. Contractor further agrees that it has carefully correlated personal observations with requirements of the Contract.

1.2.2 The Contract and Modifications have been read and carefully considered by Contractor, who understands and agrees to their sufficiency for the Work. The Contract may not be more strongly construed against the City than against Contractor and Surety.

1.2.3 Contractor shall include all items necessary for proper execution and completion of the Work.

1.2.4 Reference to standard specifications, manuals, or codes of a technical society, organization, or association, or to laws or regulations of a governmental authority, whether specific or implied, mean the latest edition in effect as of date of receipt of bids, except as may be otherwise specifically stated in the Contract.

1.2.5 No provision of any referenced standard, specification, or manual changes the duties and responsibilities of the City, City Engineer, Contractor, or Design Consultant from those set forth in the Contract. Nor do these provisions assign to Design Consultant any duty or authority to supervise or direct performance of the Work or any duty or

authority to undertake any actions contrary to provisions of the Contract.

1.2.6 Organization of Specifications into divisions, sections, and articles and arrangement of Drawings does not control Contractor in dividing the Work among Subcontractors or in establishing the extent of work to be performed by any trade.

1.2.7 Unless otherwise defined in the Contract, words which have well-known construction industry technical meanings are used in the Contract in accordance with these recognized meanings.

1.3 OWNERSHIP AND USE OF DOCUMENTS

1.3.1 Drawings, Specifications, and other documents prepared by the City or by Design Consultant are instruments of service through which the Work to be executed by Contractor is described. Contractor may retain one Contract record set.

1.3.2 Neither Contractor, Subcontractor, nor Supplier will own or claim a copyright to documents contained in the Contract or any part of the Contract.

1.3.3 Documents contained in the Contract, prepared by the City or by Design Consultant, and copies furnished to Contractor, are for use solely with respect to the Work. They may not be used by Contractor, Subcontractor or Supplier on other projects or for additions to the Work, outside the scope of the Work, without the specific written consent of City Engineer, and Design Consultant, when applicable.

1.3.4 Contractor, Subcontractors, and Suppliers are granted a limited license to use and reproduce applicable portions of the Contract appropriate to and for use in execution of their work under the Contract.

1.4 *INTERPRETATION*

1.4.1 Specifications are written in an imperative streamlined form and are directed to Contractor, unless noted otherwise. When written in this form, words "shall be" are included by inference where a colon (:) is used within sentences or phrases.

1.4.2 In the interest of brevity, the Contract frequently omits modifying words such as "all" and "any" and articles such as "the" and "an", but an absent modifier or article is not intended to affect interpretation of a statement.

ARTICLE 2 - THE CITY

2.1 *LIMITATIONS OF THE CITY'S OFFICERS AND EMPLOYEES*

2.1.1 No officer or employee of the City may authorize Contractor to perform an act or work contrary to the Contract, except as otherwise provided in the Contract.

2.2 *DUTIES OF THE CITY*

2.2.1 If a building permit is required, the City will process an application for, and Contractor shall purchase the building permit before Date of Commencement of the Work.

2.2.2 The City will make available to Contractor a reproducible set of Drawings. Additional copies will be furnished, on Contractor's request, at the cost of reproduction.

2.2.3 When necessary for performance of the Work, the City will provide surveys describing physical characteristics, legal limitations, legal description of site, and horizontal and vertical control adequate to lay out the Work.

2.2.4 Information or services that the City is required to provide under the Contract will be provided by the City with reasonable promptness to avoid delay in orderly progress of the Work.

2.2.5 The Contract imposes no implied duty on the City. The City does not warrant any plans or specifications associated with the Contract.

2.2.6 Except as expressly stated in this Article, the City owes no duty to the Contractor or any subcontractor.

2.3 *AVAILABILITY OF LAND AND USE OF SITE*

2.3.1 The City will furnish, as indicated in the Contract, rights-of-way, land on which the Work is to be performed, and other land designated in the Contract for use by Contractor unless otherwise provided in the Contract.

2.3.2 Contractor shall confine operations at site to those areas permitted by law, ordinances, permits, and the Contract, and may not unreasonably encumber site with materials or equipment.

2.3.3 In addition to land provided by the City under Section 2.3, Contractor shall provide all land and access to land that may be required for use by Contractor for temporary construction facilities or for storage of materials and equipment, and shall indemnify the City during its use of the land as stated in Section 3.25.

2.4 *THE CITY'S RIGHT TO STOP THE WORK*

2.4.1 If Contractor fails to carry out the Work in accordance with the Contract, or fails to correct work which is not in accordance with requirements of the Contract as required in Sections 12.1 and 12.2, the City may, by Notice of Noncompliance, order Contractor to stop the Work or any portion of the Work until the cause for the order has been eliminated. However, the right of the City to stop the Work will not give rise to a Claim for delay or to a duty on the part of the City to exercise this right for the benefit of Contractor or any other person or entity, except to the extent required by Section 6.2. If Contractor corrects the defective or nonconforming work within the time established in Notice of Noncompliance, City Engineer will give written notice to Contractor to resume performance of the Work.

2.5 *THE CITY'S RIGHT TO CARRY OUT WORK*

2.5.1 If Contractor fails to carry out work in accordance with the Contract, and fails within the period established in a Notice of Noncompliance to correct the nonconforming work, the City may, after expiration of the required period, correct the deficiencies without prejudice to other remedies the City may have, including rights of the City under Section 14.1.

2.5.1.1 When the City corrects deficiencies, City Engineer will issue an appropriate Change Order and deduct from payments then or thereafter due Contractor the cost of correcting the deficiencies, including compensation for Design Consultant's and Construction Manager's additional services and expenses made necessary by such default, neglect, or failure. This action by the City and amounts charged to Contractor are both subject to prior approval of City Engineer. If payments, then or thereafter due Contractor, are not sufficient to cover these amounts, Contractor shall pay the difference to the City.

2.5.2 Notwithstanding the City's right to carry out work, maintenance and protection of the Work remains Contractor's responsibility, as provided in the Contract.

ARTICLE 3 - CONTRACTOR

3.1 *RESPONSIBILITIES*

3.1.1 Contractor shall maintain office with agent in the greater City of Houston area during the Contractor's performance under the Contract. Contractor shall file its street address with City Engineer.

3.1.2 Contractor and Contractor's employees shall not give or lend money or anything of value to an officer or employee of the City. Should this Paragraph 3.1.2 be violated, City Engineer may terminate the Contract under Section 14.1.

3.2 *REVIEW OF CONTRACT AND FIELD CONDITIONS BY CONTRACTOR*

3.2.1 Contractor shall carefully study and compare documents contained in the Contract with each other and with information furnished by the City pursuant to Section 2.2 and shall immediately report, in writing, any errors, inconsistencies, or omissions to City Engineer. If work is affected, Contractor shall obtain a written interpretation or clarification from City Engineer before proceeding with the affected work. However, Contractor will not be liable to the City for failure to report an error, inconsistency, or omission in the Contract unless Contractor had actual knowledge or should have had knowledge of the error, inconsistency, or omission.

3.2.2 Contractor shall take field measurements and verify field conditions, and shall carefully compare the conditions and other information known to Contractor with the Contract, before commencing activities. Contractor shall immediately report, in writing, to City Engineer for interpretation or clarification of discrepancies, inconsistencies, or omissions discovered during this process.

3.2.3 Contractor shall make a reasonable attempt to understand the Contract before requesting interpretation from City Engineer.

3.3 *SUPERVISION AND CONSTRUCTION PROCEDURES*

3.3.1 Contractor shall supervise, direct, and inspect the Work competently and efficiently, devoting the attention and applying the skills and

expertise as necessary to perform the Work in accordance with the Contract. Contractor is solely responsible and has control over construction means, methods, techniques, sequences, and procedures of construction; for safety precautions and programs in connection with the Work; and for coordinating all work under the Contract.

3.3.2 Regardless of observations or inspections by the City or City's consultants, Contractor shall perform and complete the Work in accordance with the Contract and submittals approved pursuant to Section 3.18. The City is not liable or responsible to Contractor or Surety for work performed by Contractor that is not in accordance with the Contract regardless of whether discovered during construction or after acceptance of the Work.

3.4 *SUPERINTENDENT*

3.4.1 Contractor shall employ a competent Superintendent and necessary assistants who shall be present at the site during performance of the Work. Communications given to Superintendent are binding on the Contractor.

3.4.2 Contractor shall notify City Engineer in writing of its intent to replace the Superintendent. Contractor may not replace the Superintendent if City Engineer makes a reasonable objection in writing.

3.5 *LABOR*

3.5.1 Contractor shall provide competent, qualified personnel to survey and lay out the Work and perform construction as required by the Contract. The City may, by written notice, require Contractor to remove from the Work any employee of Contractor or Subcontractors to whom City Engineer makes reasonable objection.

3.5.2 Contractor shall comply with the applicable Business Enterprise Policy set out in this Agreement and in the Supplementary Conditions, as set out in Chapter 15, Article V of the City of Houston Code of Ordinances.

3.5.3 When Original Contract Price is greater than $1,000,000, Contractor shall make Good Faith Efforts to award subcontracts or supply agreements in at least the percentages set out in the Supplementary Conditions for Business Enterprise Policy. Contractor acknowledges that it has reviewed the requirements for Good Faith Efforts on file with the City's Office of Business Opportunity and shall comply with them.

3.5.3.1 Contractor shall require written subcontracts with Business Enterprises and shall submit all disputes with Business Enterprises to voluntary mediation. Business Enterprise subcontracts complying with City Code of Ordinances Chapter 15, Article II must contain the terms set out in Subparagraph 3.5.3.2. If Contractor is an individual person, as distinguished from a corporation, partnership, or other legal entity, and the amount of the subcontract is $50,000 or less, the subcontract must also be signed by the attorneys of the respective parties.

3.5.3.2 Contractor shall ensure that subcontracts with Business Enterprise firms are clearly labeled **"THIS CONTRACT MAY BE SUBJECT TO MEDIATION ACCORDING TO THE TEXAS ALTERNATIVE DISPUTE RESOLUTION ACT"** and contain the following terms:

3.5.3.2.1 (Business Enterprise) may not delegate or subcontract more than 50 percent of work under this subcontract to any other subcontractor without the express written consent of the City's OBO Director (the "Director").

3.5.3.2.2 (Business Enterprise) shall permit representatives of the City of Houston, at all reasonable times, to perform (1) audits of the books and records of the Subcontractors and Suppliers, and (2) inspections of all places where work is to be undertaken in connection with this subcontract. (Business Enterprise) shall keep the books and records available for this purpose for at least four years after the end of its performance under this subcontract. Nothing in this provision shall affect the time for bringing a cause of action nor the applicable statute of limitations.

3.5.3.2.3 Within five business days of execution of this subcontract, Contractor and (Business Enterprise) shall designate in writing to the Director an agent for receiving any notice required or permitted to be given pursuant to Chapter 15 of the Houston City Code of Ordinances, along with the street and mailing address and phone number of the agent.

3.5.4 The requirements and terms of the City of Houston Pay or Play Program, as set out in Executive Order 1-7 and Ordinance 2007-0534, are incorporated into the Contract for all purposes. Contractor shall comply with the terms and conditions of the Pay or Play Program as they are set out at the time of City Council approval of this

agreement. IF CONTRACTOR DOES NOT PAY IN ACCORDANCE WITH THE PAY OR PLAY PROGRAM WITHIN 30 DAYS OF THE DATE CITY ENGINEEER SENDS CONTRACTOR WRITTEN NOTIFICATION, CITY CONTROLLER MAY DEDUCT FUNDS UP TO THE AMOUNT OWED FROM ANY PAYMENTS OWED TO CONTRACTOR UNDER THIS AGREEMENT, AND CONTRACTOR WAIVES ANY RECOURSE.

3.6 *PREVAILING WAGE RATES*

3.6.1 Contractor shall comply with governing statutes providing for labor classification of wage scales for each craft or type of laborer, worker, or mechanic.

3.6.2 Prevailing wage rates applicable to the Work may be one or a combination of the following wage rates identified in Division 00:

- 3.6.2.1 Federal Wage Rate General Decisions
  - 3.6.2.1.1 Highway Rates
  - 3.6.2.1.2 Building Rates
  - 3.6.2.1.3 Heavy Construction Rates
  - 3.6.2.1.4 Residential Rates
- 3.6.2.2 City Prevailing Wage Rates
  - 3.6.2.2.1 Building Construction Rates
  - 3.6.2.2.2 Engineering Construction Rates
  - 3.6.2.2.3 Asbestos Worker Rates

3.6.3 Each week Contractor shall submit to the City's Mayor's Office of Business Opportunity certified copies of payrolls showing classifications and wages paid by Contractor, Subcontractors, and Suppliers for each employee under the Contract, for any day included in the Contract.

3.7 *LABOR CONDITIONS*

3.7.1 In the event of labor disputes affecting Contractor or Contractor's employees, Contractor shall utilize all possible means to resolve disputes in order that the Work not be delayed to any extent. These means will include seeking injunctive relief and filing unfair labor practice charges, and any other action available to Contractor.

3.7.2 When Contractor has knowledge that any actual or potential labor dispute is delaying or is threatening to delay timely performance of the Work, Contractor shall immediately notify City Engineer in writing. No Claims will be accepted by City Engineer for costs incurred as a result of jurisdictional or labor disputes.

3.8 *DRUG DETECTION AND DETERRENCE*

3.8.1 It is the policy of the City to achieve a drug-free work force and to provide a workplace that is free from the use of illegal drugs and alcohol. It is also the policy of the City that manufacture, distribution, dispensation, possession, sale, or use of illegal drugs or alcohol by contractors while on the City's premises is prohibited. By executing the Contract, Contractor represents and certifies that it meets and will comply with all requirements and procedures set forth in the Mayor's Policy on Drug Detection and Deterrence, City Council Motion No. 92-1971 ("Mayor's Policy") and the Mayor's Drug Detection and Deterrence Procedures for Contractors, Executive Order No. 1-31, (Revised) ("Executive Order"). Mayor's Policy is on file in the office of the City Secretary. Copies of Executive Order may be obtained at the location specified in the Advertisement for Bids.

3.8.1.1 The Executive Order applies to the City's contracts for labor or services except the following:

- 3.8.1.1.1 contracts authorized by Emergency Purchase Orders,
- 3.8.1.1.2 contracts in which imposition of requirements of the Executive Order would exclude all potential bidders or proposers, or would eliminate meaningful competition for the Contract,
- 3.8.1.1.3 contracts with companies that have fewer than 15 employees during any 20-week period during a calendar year and no safety impact positions,
- 3.8.1.1.4 contracts with non-profit organizations providing services at no cost or reduced cost to the public, and
- 3.8.1.1.5 contracts with federal, state, or local governmental entities.

3.8.1.2 Prior to execution of the Contract, Contractor shall have filed with the City:

- 3.8.1.2.1 a Drug Policy Compliance Agreement form (Attachment "A" to the Executive Order), and
- 3.8.1.2.2 a copy of Contractor's drug free workplace policy, and
- 3.8.1.2.3 a written designation of all safety impact positions, if applicable, or a Contractor's Certification of a No Safety Impact Positions form (Attachment "C" to the Executive Order).

3.8.1.3 Every six months during performance of the Contract and upon completion of the Contract, Contractor shall file a Drug Policy Compliance Declaration form (Attachment "B" to the Executive Order). The Contractor shall submit the Drug Policy Compliance Declaration within 30 days of expiration of each six-month period of performance and within 30 days of completion of the Contract. The first six-month period shall begin on Date of Commencement of the Work.

3.8.1.4 Contractor shall have a continuing obligation to file updated designation of safety impact positions when additional safety impact positions are added to Contractor's employee workforce during performance of the Work.

3.8.1.5 Contractor shall require its Subcontractors and Suppliers to comply with the Mayor's Policy and Executive Order. Contractor is responsible for securing and maintaining required documents from Subcontractors and Suppliers for the City inspection throughout the term of the Contract.

3.8.1.6 Failure of Contractor to comply with requirements will be a material breach of the Contract entitling the City to terminate in accordance with Section 14.1.

3.9 *MATERIALS & EQUIPMENT*

3.9.1 Unless otherwise provided in the Contract, Contractor shall provide and assume full responsibility for Products, labor, transportation, construction equipment and machinery, tools, appliances, fuel, power, light, heat, telephone, water, sanitary facilities, transportation, temporary facilities, supplies, and other facilities and incidentals necessary for Furnishing, performing, testing, starting-up, and completing the Work.

3.9.1.1 Contractor, Subcontractors, and Suppliers shall use Ultra Low Sulfur Diesel Fuel in all diesel operating vehicles and motorized equipment utilized in performing the Work. Ultra Low Sulfur Diesel Fuel is defined as diesel fuel having 15 ppm or the applicable standard set by state or federal law or rules and regulations of the Texas Commission on Environmental Quality, or the Environmental Protection Agency, whichever is less in sulfur content. Off-road Ultra Low Sulfur Diesel Fuel may be used in lieu of on-road Ultra Low Sulfur Diesel Fuel. Contractor shall provide, upon request by City Engineer, proof that Contractor, Subcontractors, and Suppliers are using Ultra Low Sulfur Diesel Fuel.

3.9.2 Contractor shall provide Products that are:

3.9.2.1 new, unless otherwise required or permitted by the Contract, and

3.9.2.2 of specified quality.

If required by City Engineer, Contractor shall furnish satisfactory evidence, including reports of required tests, as to kind and quality of Products.

3.9.3 Contractor shall store Products in a safe, neat, compact, and protected manner. Contractor shall also store Products delivered during the work, along the right-of-way:

3.9.3.1 so as to cause the least inconvenience to property owners, tenants, and general public; and

3.9.3.2 so as not to block access to, or be closer than, three feet to any fire hydrant.

Contractor shall protect trees, lawns, walks, drives, streets, and other improvements that are to remain, from damage. If private or public property is damaged by Contractor, Contractor shall, at its sole expense, restore the damaged property to at least its original condition.

3.9.3.1 Contractor shall obtain City Engineer's approval for storage areas used for Products for which payment has been requested under Paragraph 9.6.1. Contractor shall provide the City access to the storage areas for inspection purposes. Products, once paid for by the City, become the property of the City and may not be removed from place of storage, without City Engineer's written permission except for a movement to the site. Contractor's Installation Floater, required under Section 11.2, shall cover all perils, including loss or damage to Products during storage, loading, unloading, and transit to the site.

3.10 *PRODUCT OPTIONS AND SUBSTITUTIONS*

3.10.1 For Products specified by reference standards or by description only, Contractor may provide any Product meeting those standards or description.

3.10.2 For Products specified by naming one or more manufacturers with provision for substitutions or equal, Contractor may submit a request for substitution for any manufacturer not named.

3.10.3 City Engineer will consider requests for substitutions only within the first 15 percent of Contract Time, or first 90 days after date of Notice to Proceed, whichever is less.

3.10.4 Contractor shall document each request for substitution with complete data

substantiating compliance of proposed substitution with the Contract.

3.10.5 A request for substitution constitutes a representation that Contractor:

3.10.5.1 has investigated the proposed Product and determined that it meets or exceeds the quality level of the specified Product;

3.10.5.2 shall provide the same warranty for the substitution as for the specified Product;

3.10.5.3 shall coordinate installation of the proposed substitution and make changes to other work which may be required for the Work to be completed, with no additional cost or increase in time to the City;

3.10.5.4 confirms that cost data is complete and includes all related costs under the Contract;

3.10.5.5 waives Claim for additional costs or time extensions that may subsequently become apparent; and

3.10.5.6 shall provide review or redesign services by a design consultant with appropriate professional license and shall obtain re-approval and permits from authorities.

3.10.6 City Engineer will not consider and will not approve substitutions when:

3.10.6.1 they are indicated or implied on Shop Drawing or Product Data submittals without separate written request; or

3.10.6.2 acceptance will require revision to the Contract.

3.10.7 City Engineer may reject requests for substitution, and his decision will be final and binding on the Parties.

3.11 *CASH ALLOWANCES*

3.11.1 Contract Price includes Cash Allowances as identified in the Contract.

3.11.2 The City will pay the actual costs of Cash Allowance item exclusive of profit, overhead or administrative costs. If actual costs exceed the Cash Allowance, City Engineer must approve a Change Order for the additional costs.

3.12 *WARRANTY*

3.12.1 Contractor warrants to the City that Products furnished under the Contract are:

3.12.1.1 free of defects in title;

3.12.1.2 of good quality; and

3.12.1.3 new, unless otherwise required or permitted by the Contract.

If required by the City Engineer, Contractor shall furnish satisfactory evidence as to kind, quality and title of Products, and that Products conform to requirements of the Contract.

3.12.2 In the event of a defect in a Product, either during construction or warranty period, Contractor shall take appropriate action with manufacturer of Product to assure correction or replacement of defective Product with minimum delay.

3.12.3 Contractor warrants that the Work is free of defects not inherent in the quality required or permitted, and that the Work does conform with the requirements of the Contract. Contractor further warrants that the Work has been performed in a thorough and workmanlike manner.

3.12.4 Contractor warrants that the Work is free of concentrations on polychlorinated biphenyl (PCB) and other substances defined as hazardous by the Comprehensive Environmental Response Compensation and Liability Act (CERCLA) or any other applicable law or regulation.

3.12.5 Work not conforming to requirements of Section 3.12, including substitutions not properly approved and authorized, may be considered nonconforming work.

3.12.6 Contractor's warranty excludes remedy for damage or defect caused by:

3.12.6.1 improper or insufficient maintenance by the City;

3.12.6.2 normal wear and tear under normal usage; or

3.12.6.3 claim that hazardous material was incorporated into the Work, if that material was specified in the Contract.

3.12.7 Contractor warrants that title to all work covered by Contractor's request for payment passes to the City upon incorporation into the Work or upon Contractor's receipt of payment, whichever occurs first. The Contractor further warrants that the title is free of all liens, claims, security interests or other interests ("Encumbrances"). If not, upon written demand from City Engineer, Contractor shall immediately take legal action necessary to remove Encumbrances.

3.13 *TAXES*

3.13.1 Contractor shall pay all sales, consumer, use, and similar taxes, which are in effect or scheduled to go into effect on or before bids are received, related to work provided by Contractor.

3.13.2 Contractor shall obtain, and require Subcontractors and Suppliers to obtain, necessary permits from the state and local taxing authorities to perform contractual obligations under the Contract, including sales tax permits.

3.13.3 The City is exempt from the Federal Transportation and Excise Tax. Contractor shall comply with federal regulations governing the exemptions.

3.13.4 Products incorporated into the Work are exempt from state sales tax according to provisions of the TEX. TAX CODE ANN. CH. 151, Subsection H.

3.14 *PERMITS, FEES, AND NOTICES*

3.14.1 Unless otherwise provided in the Contract, Contractor shall secure and pay for all construction permits, licenses, and inspections:

3.14.1.1 necessary for proper execution and completion of the Work; and

3.14.1.2 legally required at time bids are received.

3.15 *CONSTRUCTION SCHEDULES*

3.15.1 On receipt of Notice to Proceed, Contractor shall promptly prepare and submit construction schedule for the Work for City Engineer's review. The schedule must reflect the minimum time required to complete the Work not to exceed Contract Time.

3.15.2 Contractor shall give 24-hour written notice to City Engineer before commencing work or resuming work where work has been stopped. Contractor shall also give the same notice to inspectors.

3.15.3 Contractor shall incorporate milestones specified in Summary of Work Specification into the construction schedule. Contractor's failure to meet a milestone, as determined by City Engineer, may be considered a material breach of the Contract.

3.15.4 Each month, Contractor shall submit to City Engineer a copy of an updated construction schedule indicating actual progress, incorporating applicable changes, and indicating courses of action required to assure completion of the Work within Contract Time.

3.15.5 Contractor shall keep a current schedule of submittals that coordinates with the construction schedule, and shall submit the initial schedule of submittals to City Engineer for approval.

3.16 *DOCUMENTS AND SAMPLES AT THE SITE*

3.16.1 Contractor shall maintain at the site, and make available to City Engineer, one record copy of Drawings, Specifications, and Modifications. Contractor shall maintain the documents in good order and marked currently to record changes and selections made during construction. In addition, Contractor shall maintain at the site, approved Shop Drawings, Product Data, Samples, and similar submittals, which will be delivered to City Engineer prior to final inspection as required in Paragraph 9.11.4.

3.16.2 Contractor shall maintain all books, documents, papers, accounting records, and other relevant documentation pursuant to the Work and shall make the books, documents, papers, and accounting records available to representatives of the City for review and audits during the Contract term and for the greater of three years following Date of Substantial Completion or until all litigation or audits are fully resolved.

3.16.3 Contractor shall provide to City Attorney all documents and records that City Attorney deems necessary to assist in determining Contractor's compliance with the Contract, with the exception of those documents made confidential by federal or state law or regulation.

3.17 *MANUFACTURER'S SPECIFICATIONS*

3.17.1 Contractor shall handle, store, and Install Products and perform all work in the manner required by Product manufacturer. Should the Contract and manufacturer's instructions conflict, Contractor shall report conflict to City Engineer for resolution prior to proceeding with the affected work.

3.17.2 References in the Contract to the manufacturer's specifications, directions, or recommendations, mean manufacturer's current published documents in effect as of date of receipt of bids, or in the case of a Modification, as of date of Modification.

3.18 SHOP DRAWINGS, PRODUCT DATA, AND SAMPLES

3.18.1 Shop Drawings, Product Data, and Samples are not part of the Contract. The purpose of Contractor submittals is to demonstrate, for those portions of the Work for which submittals are required, the way Contractor proposes to conform to information given and design concept expressed in the Contract.

3.18.2 Contractor shall submit to Project Manager for review the Shop Drawings, Product Data, and Samples, which are required by the Contract. Review by Project Manager is subject to limitations of Paragraph 4.1.4. Contractor shall transmit the submittals to the Project Manager with reasonable promptness and in a sequence, so as to cause no delay in the Work or in activities of the City or of separate contractors. Contractor shall transmit submittals in time to allow a minimum of 30 days for Project Manager's review prior to date Contractor needs reviewed submittals returned. This time may be shortened for a particular job requirement if approved by Project Manager in advance of submittal.

3.18.3 Contractor shall certify that the content of submittals conforms to the Contract without exception by affixing Contractor's approval stamp and signature. By certifying and submitting Shop Drawings, Product Data, and Samples, Contractor represents, and Contractor's stamp of approval shall state, that Contractor has determined and verified materials, quantities, field measurements, and field construction criteria related to the submittal, and has checked and coordinated information contained within the submittals with requirements of the Contract.

3.18.4 Contractor may not perform any work requiring submittal and review of Shop Drawings, Product Data, or Samples until the submittal has been returned with appropriate review decision by the Project Manager. Contractor shall perform work in accordance with the review.

3.18.5 If Contractor performs any work requiring submittals prior to review and acceptance of the submittals by Project Manager, such work is at Contractor's risk and the City is not obligated to accept work if the submittals are later found to be unacceptable.

3.18.6 If, in the opinion of Project Manager, the submittals are incomplete, or demonstrate an inadequate understanding of the Work or lack of review by the Contractor, then submittals may be returned to the Contractor for correction and resubmittal.

3.18.7 Contractor shall direct specific attention in writing and on the resubmitted Shop Drawings, Product Data, or Samples to any additional proposed revisions, other than those revisions requested by Project Manager on previous submittals.

3.18.8 Contractor is not relieved of responsibility for deviations from requirements of the Contract by Project Manager's review of Shop Drawings, Product Data, or Samples unless Contractor has specifically informed Project Manager in writing of the deviation at the time of the submittal, and Project Manager has given written approval of the deviation.

3.18.9 When professional certification of performance criteria of Products is required by the Contract, the City may rely upon accuracy and completeness of the calculations and certifications.

3.18.10 For Product colors or textures to be selected by the City, Contractor shall submit all samples together to allow preparation of a complete selection schedule.

3.18.11 Contractor shall submit informational submittals, on which Project Manager is not expected to take responsive action, as required by the Contract.

3.18.12 Submittals made by Contractor which are not required by the Contract may be returned to Contractor without action.

3.19 CULTURAL RESOURCES AND ENDANGERED SPECIES

3.19.1 Contractor may not remove or disturb, or cause to be removed or disturbed, any historical, archaeological, architectural, or other cultural artifacts, relics, vestiges, remains, or objects of antiquity. If Contractor discovers one of these items, Contractor shall immediately notify City Engineer and further comply with the requirements of 13 Tex. Admin. Code Chs. 25 and 26 (2002), or successor regulation. Contractor shall protect site and cultural resources from further disturbance until professional examination can be made or until clearance to proceed is authorized in writing by City Engineer.

3.19.2 Should either threatened or endangered plant or animal species be encountered,

Contractor shall cease work immediately in the area of encounter and notify City Engineer.

3.20 *CUTTING AND PATCHING*

3.20.1 Contractor is responsible for necessary cutting, fitting, and patching to accomplish the Work and shall suitably support, anchor, attach, match, and trim or seal materials to work of other contractors. Contractor shall coordinate the Work with work of other contractors to minimize conflicts, as provided in Article 6.

3.20.2 Contractor may not endanger work by cutting, digging, or other action, and may not cut or alter work of other contractors except by written consent of City Engineer and affected contractor.

3.21 *CLEANING*

3.21.1 Contractor shall perform daily cleanup of all dirt, debris, scrap materials and other disposable items resulting from Contractor's operations, whether on-site or off-site. Unless otherwise authorized in writing by City Engineer; Contractor shall keep all streets, access streets, driveways, areas of public access, walkways, and other designated areas clean and open at all times.

3.21.2 Failure of Contractor to maintain a clean site, including access streets, is the basis for City Engineer to issue a Notice of Noncompliance. Should compliance not be attained within the time period in the Notice of Noncompliance, City Engineer may authorize necessary cleanup to be performed by others and the cost of the cleanup will be deducted from monies due Contractor.

Contractor shall legally dispose off-site, all waste materials and other excess materials resulting from Contractor's operations.

3.22 *SANITATION*

3.22.1 Contractor shall provide and maintain sanitary facilities at site for use of all construction forces under the Contract. Newly-constructed or existing sanitary facilities may not be used by Contractor.

3.23 *ACCESS TO WORK AND TO INFORMATION*

3.23.1 Contractor shall provide the City, Design Consultant, testing laboratories, and governmental agencies which have jurisdictional interests, access to the Work in preparation and in progress wherever located. Contractor shall provide proper and safe conditions for the access.

3.23.2 If required by City Engineer, Contractor shall furnish information concerning character of Products and progress and manner of the Work, including information necessary to determine cost of the Work, such as number of employees, pay of employees, and time employees worked on various classes of the Work.

3.24 *TRADE SECRETS*

3.24.1 Contractor will not make any claim of ownership of trade secrets as to products used in the Work, or preparation of any mixture for the Work. City Engineer will at all times have the right to demand and Contractor shall furnish information concerning materials or samples of ingredients of any materials used, or proposed to be used, in preparation of concrete placed or other work to be done. Mixtures, once agreed on, shall not be changed in any manner without knowledge and consent of City Engineer. The City will make its best efforts to protect confidentiality of proprietary information.

3.25 *INDEMNIFICATION*

3.25.1 CONTRACTOR AGREES TO AND SHALL DEFEND, INDEMNIFY, AND HOLD THE CITY, ITS AGENTS, EMPLOYEES, OFFICERS, AND LEGAL REPRESENTATIVES (COLLECTIVELY THE "CITY") HARMLESS FOR ALL CLAIMS, CAUSES OF ACTION, LIABILITIES, FINES, AND EXPENSES (INCLUDING, WITHOUT LIMITATION, ATTORNEYS' FEES, COURT COSTS, AND ALL OTHER DEFENSE COSTS AND INTEREST) FOR INJURY, DEATH, DAMAGE, OR LOSS TO PERSONS OR PROPERTY SUSTAINED IN CONNECTION WITH OR INCIDENTAL TO PERFORMANCE UNDER THE CONTRACT INCLUDING, WITHOUT LIMITATION, THOSE CAUSED BY:

3.25.1.1 CONTRACTOR'S AND/OR ITS AGENTS', EMPLOYEES', OFFICERS', DIRECTORS', CONTRACTORS', OR SUBCONTRACTORS' (COLLECTIVELY IN NUMBERED SUBPARAGRAPHS .1 through .3, "CONTRACTOR") ACTUAL OR ALLEGED NEGLIGENCE OR INTENTIONAL ACTS OR OMISSIONS;

3.25.1.2 THE CITY'S AND CONTRACTOR'S ACTUAL OR ALLEGED CONCURRENT NEGLIGENCE, WHETHER CONTRACTOR IS IMMUNE FROM LIABILITY OR NOT;

3.25.1.3 THE CITY'S AND CONTRACTOR'S ACTUAL OR ALLEGED STRICT PRODUCTS LIABILITY OR STRICT STATUTORY LIABILITY, WHETHER CONTRACTOR IS IMMUNE FROM LIABILITY OR NOT.

CONTRACTOR SHALL DEFEND, INDEMNIFY, AND HOLD THE CITY HARMLESS DURING THE TERM OF THE CONTRACT AND FOR FOUR YEARS AFTER THE CONTRACT TERMINATES. CONTRACTOR SHALL NOT INDEMNIFY THE CITY FOR THE CITY'S SOLE NEGLIGENCE.

3.25.2 NOTWITHSTANDING ANYTHING TO THE CONTRARY, THE LIABILITY OF CONTRACTOR FOR THE CITY'S CONCURRENT NEGLIGENCE SHALL NOT EXCEED $1,000,000.

3.26 *RELEASE AND INDEMNIFICATION – PATENT, COPYRIGHT, TRADEMARK, AND TRADE SECRET INFRINGEMENT*

3.26.1 UNLESS OTHERWISE SPECIFICALLY REQUIRED BY THE CONTRACT, CONTRACTOR AGREES TO AND SHALL RELEASE AND DEFEND, INDEMNIFY, AND HOLD HARMLESS THE CITY, ITS AGENTS, EMPLOYEES, OFFICERS, AND LEGAL REPRESENTATIVES (COLLECTIVELY THE "CITY") FROM ALL CLAIMS OR CAUSES OF ACTION BROUGHT AGAINST THE CITY BY ANY PARTY, INCLUDING CONTRACTOR, ALLEGING THAT THE CITY'S USE OF ANY EQUIPMENT, SOFTWARE, PROCESS, OR DOCUMENTS CONTRACTOR FURNISHES DURING THE TERM OF THE CONTRACT INFRINGES ON A PATENT, COPYRIGHT, OR TRADEMARK, OR MISAPPROPRIATES A TRADE SECRET. CONTRACTOR SHALL PAY ALL COSTS (INCLUDING, WITHOUT LIMITATION, ATTORNEYS' FEES, COURT COSTS, AND ALL OTHER DEFENSE COSTS, AND INTEREST) AND DAMAGES AWARDED.

3.26.2 CONTRACTOR SHALL NOT SETTLE ANY CLAIM ON TERMS WHICH PREVENT THE CITY FROM USING THE EQUIPMENT, SOFTWARE, PROCESS, OR PRODUCT WITHOUT THE CITY ENGINEER'S PRIOR WRITTEN CONSENT.

3.26.3 UNLESS OTHERWISE SPECIFICALLY REQUIRED BY THE CONTRACT, WITHIN 60 DAYS AFTER BEING NOTIFIED OF THE CLAIM, CONTRACTOR SHALL, AT ITS OWN EXPENSE, EITHER:

3.26.3.1 OBTAIN FOR THE CITY THE RIGHT TO CONTINUE USING THE EQUIPMENT, SOFTWARE, PROCESS, OR PRODUCT, OR

3.26.3.2 IF BOTH PARTIES AGREE, REPLACE OR MODIFY THEM WITH COMPATIBLE AND FUNCTIONALLY EQUIVALENT PRODUCTS.

IF NONE OF THESE ALTERNATIVES IS REASONABLY AVAILABLE, THE CITY MAY RETURN THE EQUIPMENT, SOFTWARE, OR PRODUCT, OR DISCONTINUE THE PROCESS, AND CONTRACTOR SHALL REFUND THE PURCHASE PRICE.

3.27 *INDEMNIFICATION PROCEDURES*

3.27.1 *Notice of Indemnification Claims:* If the City or Contractor receives notice of any claim or circumstances which could give rise to an indemnified loss, the receiving party shall give written notice to the other Party within 10 days. The notice must include the following:

3.27.1.1 a description of the indemnification event in reasonable detail,

3.27.1.2 the basis on which indemnification may be due, and

3.27.1.3 the anticipated amount of the indemnified loss.

This notice does not estop or prevent the City from later asserting a different basis for indemnification or a different amount of indemnified loss than that indicated in the initial notice. If the City does not provide this notice within the 10-day period, it does not waive any right to indemnification except to the extent that Contractor is prejudiced, suffers loss, or incurs expense because of the delay.

3.27.2 *Defense of Indemnification Claims:*

3.27.2.1 *Assumption of Defense:* Contractor may assume the defense of the claim at its own expense with counsel chosen by it that is reasonably satisfactory to the City. Contractor shall then control the defense and any negotiations to settle the claim. Within 10 days after receiving written notice of the indemnification request, Contractor must advise the City as to whether or not it will defend the claim. If Contractor does not assume the defense, the City shall assume and control the defense, and all defense expenses constitute an indemnified loss.

3.27.2.2 *Continued Participation:* If Contractor elects to defend the claim, the City may

retain separate counsel to participate in, but not control, the defense and to participate in, but not control, any settlement negotiations. Contractor may settle the claim without the consent or agreement of the City, unless it:

3.27.2.2.1 would result in injunctive relief or other equitable remedies or otherwise require the City to comply with restrictions or limitations that adversely affect the City;

3.27.2.2.2 would require the City to pay amounts that Contractor does not fund in full; or

3.27.2.2.3 would not result in the City's full and complete release from all liability to the plaintiffs or claimants who are parties to or otherwise bound by the settlement.

3.28 *CONTRACTOR DEBT*

IF CONTRACTOR, AT ANY TIME DURING THE TERM OF THIS AGREEMENT, INCURS A DEBT, AS THE WORD IS DEFINED IN SECTION 15-122 OF THE HOUSTON CITY CODE OF ORDINANCES, IT SHALL IMMEDIATELY NOTIFY CITY CONTROLLER IN WRITING. IF CITY CONTROLLER BECOMES AWARE THAT CONTRACTOR HAS INCURRED A DEBT, IT SHALL IMMEDIATELY NOTIFY CONTRACTOR IN WRITING. IF CONTRACTOR DOES NOT PAY THE DEBT WITHIN 30 DAYS OF EITHER SUCH NOTIFICATION, CITY CONTROLLER MAY DEDUCT FUNDS IN AN AMOUNT EQUAL TO THE DEBT FROM ANY PAYMENTS OWED TO CONTRACTOR UNDER THIS AGREEMENT, AND CONTRACTOR WAIVES ANY RECOURSE THEREFOR. CONTRACTOR SHALL FILE A NEW AFFIDAVIT OF OWNERSHIP, USING THE FORM DESIGNATED BY CITY, BETWEEN FEBRUARY 1 AND MARCH 1 OF EVERY YEAR DURING THE TERM OF THE CONTRACT.

ARTICLE 4 - ADMINISTRATION OF THE CONTRACT

4.1 *CONTRACT ADMINISTRATION*

4.1.1 City Engineer will provide administration of the Contract and City Engineer is authorized to issue Change Orders, Work Change Directives, and Minor Changes in the Work.

4.1.2 City Engineer may act through Project Manager, Design Consultant, or Inspector. When the term "City Engineer" is used in the Contract, action by City Engineer is required unless City Engineer delegates his authority in writing. The City Engineer may not delegate authority to render decisions under Section 4.4.

The City does not have control over or charge of, and is not responsible for, supervision, construction, and safety procedures enumerated in Section 3.3. The City does not have control over or charge of and is not responsible for acts or omissions of Contractor, Subcontractors, or Suppliers.

4.1.3 The City and Design Consultant may attend project meetings and visit the site to observe progress and quality of the Work. The City and Design Consultant are not required to make exhaustive or continuous on-site inspections to check quality or quantity of the Work.

4.1.4 Project Manager will review and approve or take other appropriate action on Contractor's submittals, but only for limited purpose of checking for conformance with information given and design concept expressed in the Contract.

4.1.5 Project Manager's review of the submittals is not conducted for purpose of determining accuracy and completeness of other details, such as dimensions and quantities, or for substantiating instructions for installation or performance of Products, all of which remain the responsibility of Contractor.

4.1.6 Project Manager's review of submittals does not relieve Contractor of its obligations under Sections 3.3, 3.12, and 3.18. Review does not constitute approval of safety precautions or, unless otherwise specifically stated by Project Manager in writing, of construction means, methods, techniques, sequences, or procedures. Project Manager's review of a specific item does not indicate approval of an assembly of which the item is a component.

4.1.7 Based on field observations and evaluations, Project Manager will process Contractor's progress payments, certify amounts due Contractor, and issue Certificates for Payment in the amount certified.

4.1.8 Project Manager will receive and forward to City Engineer for his review and records, written warranties and related documents required by the Contract and assembled by Contractor.

4.1.9 Upon written request by Contractor or Project Manager, City Engineer will resolve matters of interpretation of or performance of the Contract, which are not Claims. City Engineer's decisions are final and binding on the Parties.

4.1.10 City Engineer may reject work which does not conform to the Contract.

4.1.11 When City Engineer considers it necessary to implement the intent of the Contract, City Engineer may require additional inspection or testing of work in accordance with Paragraphs 13.6.3 and 13.6.4, whether such work is fabricated, Installed, or completed.

4.2 *COMMUNICATIONS IN ADMINISTRATION OF THE CONTRACT*

4.2.1 Except as otherwise provided in the Contract or when authorized by City Engineer in writing, Contractor shall communicate with Project Manager. Contractor shall communicate with Design Consultant, Design Consultant's subconsultants, and separate contractors through Project Manager. The City will communicate with Subcontractors and Suppliers through Contractor.

4.3 *CLAIMS AND DISPUTES*

4.3.1 *Documentation by Project Manager:* Contractor shall submit Claims, including those alleging an error or omission by Project Manager or Design Consultant, to Project Manager for documentation and recommendation to City Engineer.

4.3.2 *Decision of City Engineer:* Upon submission of Claim by Project Manager or Contractor, City Engineer will resolve Claims in accordance with Section 4.4.

4.3.3 *Time Limits on Claims:* Claims by Contractor must be made within 90 days after occurrence of event giving rise to the Claim.

4.3.4 *Continuing the Contract Performance:* Pending final resolution of a Claim including referral to non-binding mediation, unless otherwise agreed in writing, Contractor shall proceed diligently with the performance of the Contract and the City will continue to make payments in accordance with the Contract.

4.3.4.1 Pending final resolution of a Claim including referral to non-binding mediation, Contractor is responsible for safety and protection of physical properties and conditions at site.

4.3.5 *Claims for Concealed or Unknown Conditions:* Concealed or unknown physical conditions include utility lines, other man-made structures, storage facilities, Pollutants and Pollutant Facilities, and the like, but do not include conditions arising from Contractor operations, or failure of Contractor to properly protect and safeguard subsurface facilities. Concealed conditions also include naturally-occurring soil conditions outside the range of soil conditions identified through geotechnical investigations, but do not include conditions arising from groundwater, rain, or flood.

4.3.5.1 If conditions are encountered at the site which are Underground Facilities or otherwise concealed or unknown conditions which differ materially from:

4.3.5.1.1 those indicated by the Contract; or

4.3.5.1.2 conditions which Contractor could have discovered through site inspection, geotechnical testing, or otherwise;

then Contractor will give written notice to City Engineer no later than five days after Contractor's first observation of the condition and before condition is disturbed. Contractor's failure to provide notice constitutes a waiver of a Claim.

4.3.5.2 City Engineer will promptly investigate concealed or unknown conditions. If City Engineer determines that conditions at the site are not materially different and that no change in Contract Price or Contract Time is justified, City Engineer will notify Contractor in writing, stating reasons. If City Engineer determines the conditions differ materially and cause increase or decrease in Contractor's cost or time required for performance of part of the Work, City Engineer will recommend an adjustment in Contract Price or Contract Time, or both, as provided in Article 7. Opposition by a Party to the City Engineer's determination must be made within 21 days after City Engineer has given notice of the decision. If the Parties cannot agree on adjustment to Contract Price or Contract Time, adjustment is subject to further proceedings pursuant to Section 4.4.

4.3.6 *Claims for Additional Cost:* If Contractor wishes to make a Claim for increase in Contract Price, Contractor shall give written notice before proceeding with work for which Contractor intends to submit a Claim. Prior notice is not required for Claims relating to an emergency

endangering life or property arising under Section 10.4.

4.3.6.1 Contractor may file a Claim in accordance with Section 4.4 if Contractor believes it has incurred additional costs, for the following reasons:

- 4.3.6.1.1 written interpretation of City Engineer;
- 4.3.6.1.2 order by City Engineer to stop the Work when Contractor is not at fault;
- 4.3.6.1.3 suspension of the Work by City Engineer;
- 4.3.6.1.4 termination of the Contract by City Engineer; or
- 4.3.6.1.5 The City's non-compliance with another provision of the Contract.

4.3.6.2 No increase in Contract Price is allowed for delays or hindrances to the Work, except for direct and unavoidable extra costs to Contractor caused by failure of the City to provide information and services, or to make land and materials available, when required of the City under the Contract. Any increase claimed is subject to the provisions of Section 4.4 and Article 7.

4.3.6.3 The City is not liable for Claims for delay when Date of Substantial Completion occurs prior to expiration of Contract Time.

4.3.7 *Claims for Additional Time:* If Contractor wishes to make a Claim for an increase in Contract Time, Contractor shall give written notice as provided in Section 8.2. In case of continuing delay, only one Claim is necessary.

4.4 *RESOLUTION OF CLAIMS AND DISPUTES*

4.4.1 City Engineer will review Claims and take one or more of the following preliminary actions within 30 days of receipt of Claim:

- 4.4.1.1 submit a suggested time to meet and discuss the Claim with City Engineer;
- 4.4.1.2 reject Claim, in whole or in part, stating reasons for rejection;
- 4.4.1.3 recommend approval of the Claim by the other Party;
- 4.4.1.4 suggest a compromise; or
- 4.4.1.5 take other actions as City Engineer deems appropriate to resolve the Claim.

4.4.2 City Engineer may request additional supporting data from claimant. Party making Claim shall, within 10 days after receipt of City Engineer's request, submit additional supporting data requested by City Engineer.

4.4.3 At any time prior to rendering a written decision regarding a Claim, City Engineer may refer Claim to non-binding mediation. If Claim is resolved, City Engineer will prepare and obtain all appropriate documentation. If Claim is not resolved, City Engineer will take receipt of Claim and begin a new review under Section 4.4.

4.4.4 If Claim is not referred to or settled in non-binding mediation, City Engineer may conduct a hearing and will render a written decision, including findings of fact, within 75 days of receipt of Claim, or a time mutually agreed upon by the Parties in writing. City Engineer may notify Surety and request Surety's assistance in resolving Claim. City Engineer's decision is final and binding on the Parties.

4.5 *CONDITION PRECEDENT TO SUIT; WAIVER OF ATTORNEY FEES AND INTEREST*

4.5.1 Neither the City nor Contractor may recover attorney fees for any claim brought in connection with this Contract.

4.5.2 Neither the City nor the Contractor may recover interest for any damages claim brought in connection with this Contract except as allowed by TEXAS LOCAL GOVERNMENT CODE Chapter 2251.

4.6 *INTERIM PAYMENT WAIVER & RELEASE*

4.6.1 In accordance with section 4.3, the Contractor shall use due diligence in the discovery and submission of any Claim against the City related to the Contractor's work.

4.6.2 The Contractor shall submit any Claim to the City not later than the 90th day after the occurrence of the event giving rise to the Claim.

4.6.3 Any failure to timely comply with the requirements of section 4.6.2 waives and releases any Claim when the Contractor submits an application for payment after the 90th day.

4.6.4 This waiver does not cover any retainage. In case of any conflict of law, this language shall be revised to the minimum extent necessary to avoid legal conflict. This waiver is made specifically for the benefit of the City.

ARTICLE 5 - SUBCONTRACTORS AND SUPPLIERS

5.1 *AWARD OF SUBCONTRACTS OTHER CONTRACTS FOR PORTIONS OF THE WORK*

5.1.1 Contractor may not contract with a Subcontractor, Supplier, person, or entity that City Engineer has made a reasonable and timely objection to.

5.1.2 If City Engineer has a reasonable objection to person or entity proposed by Contractor, Contractor shall propose another with whom City Engineer has no reasonable objection.

5.1.3 Contractor shall execute contracts with approved Subcontractors, Suppliers, persons, or entities before the Subcontractors or Suppliers begin work under the Contract. All such contracts must be executed and sent to the OBO Director and Contracting Department within 30 days after the date of the Notice to Proceed and must include provisions set forth in Articles 3 and 5 of this Document.

5.1.4 Contractor shall notify City Engineer in writing of any proposed change of Subcontractor, Supplier, person, or entity previously accepted by the City.

5.1.5 Contractor shall make timely payments to Subcontractors and Suppliers for performance of the Contract. Contractor shall protect, defend, and indemnify the City from any claim or liability arising out of Contractor's failure to make the payments. Disputes relating to payment of Business Enterprise Subcontractors or Suppliers will be submitted to arbitration in same manner as other disputes under Business Enterprise subcontracts. Failure of Contractor to comply with decisions of arbitrator may be determined by City Engineer a material breach leading to termination of the Contract.

5.2 *CONTRACTOR RESPONSIBILITY FOR SUBCONTRACTORS*

5.2.1 Contractor is responsible to the City, as may be required by laws and regulations, for all acts and omissions of Subcontractors, Suppliers, and other persons and organizations performing or furnishing any of the Work under direct or indirect contract with Contractor.

5.2.2 Contractor shall make available to each proposed Subcontractor, prior to execution of subcontract, copies of the Contract to which Subcontractor is bound by this Section 5.2. Contractor shall notify Subcontractor of any terms of proposed subcontract which may be at variance with the Contract.

5.2.3 The City's approval of Subcontractor or Suppliers does not relieve Contractor of its obligation to perform, or to have performed to the full satisfaction of the City, the Work required by the Contract.

5.2.4 Unless there is a contractual relationship between Contractor and a Subcontractor or Supplier to the contrary, Contractor shall withhold no more retainage from Subcontractors or Suppliers than City withholds from Contractor under this Agreement. However, once a Subcontractor or Supplier completes performance, Contractor shall release all retainage to that Subcontractor or Supplier regardless if City continues to retain under this Agreement.

5.2.5 Prior to a Subcontractor or Supplier commencing performance for Contractor, Contractor shall meet with that Subcontractor or Supplier to provide instructions on invoicing procedures, dispute resolution procedures, and statutory rights, such as claim filing procedures under the McGregor Act. Subcontractors and Suppliers must certify to the City Engineer that Contractor has fulfilled the requirements of this Section.

ARTICLE 6 - CONSTRUCTION BY THE CITY OR BY SEPARATE CONTRACTORS

6.1 *THE CITY'S RIGHT TO PERFORM CONSTRUCTION AND TO AWARD SEPARATE CONTRACTS*

6.1.1 The City may perform on-site construction operations related to the Work and as part of the Project with the City's workforce or with separate contractors.

6.2 *COORDINATION*

6.2.1 The City will coordinate activities of the City's workforce and of each separate contractor with work of Contractor, and Contractor shall cooperate with the City and separate contractors.

6.2.1.1 Contractor shall participate with other separate contractors and the City in reviewing their construction schedules when directed to do so by the Project Manager. Contractor shall make revisions to construction schedule and Contract Price deemed

necessary after joint review and mutual agreement. Construction schedules shall then constitute schedules to be used by Contractor, separate contractors, and the City, until subsequently revised.

6.2.2 Contractor shall afford to the City and to separate contractors reasonable opportunity for introduction and storage of their materials and equipment, and for performance of their activities.

6.2.3 If part of Contractor's work depends on proper execution of construction or operations by the City or a separate contractor, Contractor shall, prior to proceeding with that portion of the Work, inspect the other work and promptly report to City Engineer apparent discrepancies or defects in the other construction that would render it unsuitable for the proper execution of the Work. Failure of Contractor to report apparent discrepancies or defects in the other construction shall constitute acknowledgment that the City's or separate contractor's completed or partially completed construction is fit and proper to receive Contractor's work, except as to discrepancies or defects not then reasonably discoverable.

6.3 *MUTUAL RESPONSIBILITY*

6.3.1 The responsible party bears the costs caused by delays, by improperly timed activities, or by nonconforming construction.

6.3.2 Contractor shall promptly remedy damage caused by Contractor to completed or partially completed construction or to property of the City or separate contractor.

6.3.3 Claims or disputes between Contractor and other City contractors, or subcontractors of other City contractors, working on the Project must be submitted to binding arbitration in accordance with Construction Industry Arbitration Rules of the American Arbitration Association upon demand by any party to the dispute or by the City.

6.4 *THE CITY'S RIGHT TO CLEAN UP*

6.4.1 If dispute arises among Contractor, separate contractors, and the City as to responsibility under their respective contracts for maintaining premises and surrounding area free from waste materials and rubbish as described in Section 3.21, the City may clean up and allocate cost among those responsible, as determined by City Engineer.

ARTICLE 7 - CHANGES IN THE WORK

7.1 *CHANGES*

7.1.1 Changes in scope of the Work, subject to limitations in Article 7 and elsewhere in the Contract, may be accomplished without invalidating the Contract, or without notifying Surety by:

7.1.1.1 Change Order;
7.1.1.2 Work Change Directive; or
7.1.1.3 Minor Change in the Work.

7.1.2 The following types of Change Orders require City Council approval:

7.1.2.1 a single Change Order that exceeds five percent of Original Contract Price,
7.1.2.2 a Change Order which, when added to previous Change Orders, exceeds five percent of Original Contract Price,
7.1.2.3 a Change Order, in which the total value of increases outside of the general scope of work approved by City Council, when added to increases outside the general scope of work approved by City Council in previous Change Orders, exceeds 40 percent of the Original Contract Price, even if the net increase to the Original Contract Price is five percent or less.

In this context, "increase" means an increase in quantity resulting from the addition of locations not within the scope of work approved by City Council, or the addition of types of goods or services not bid as unit price items.

Nothing in this Section is intended to permit an increase of the Contract Price in excess of the limit set out in TEX. LOC. GOV'T CODE ANN. §252.048 or its successor statute.

7.1.3 Contractor shall proceed promptly to execute changes in the Work provided in Modifications, unless otherwise stated in the Modification.

7.2 *WORK CHANGE DIRECTIVES*

7.2.1 A Work Change Directive cannot change Contract Price or Contract Time, but is evidence that the Parties agree that a change, ordered by directive, will be incorporated in a subsequently issued Change Order as to its effect, if any, on Contract Price or Contract Time.

7.2.2 Failure by Contractor to commence work identified in a Work Change Directive within the time specified by City Engineer, or to complete the

work in a reasonable period of time, may be determined by City Engineer to be a material breach of Contract.

7.2.3 A Work Change Directive is used in the absence of total agreement of the terms of a Change Order. Interim payments are made in accordance with Paragraph 9.6.1.

7.2.4 If Contractor signs a Work Change Directive, then Contractor agrees to its terms including adjustment in Contract Price and Contract Time or method for determining them. Agreement by the Parties to adjustments in Contract Price and Contract Time are immediately recorded as a Change Order.

7.2.5 City Engineer, by Work Change Directive, may direct Contractor to take measures as necessary to expedite construction to achieve Date of Substantial Completion on or before expiration of Contract Time. When the Work is expedited solely for convenience of the City and not due to Contractor's failure to prosecute timely completion of the Work, then Contractor is entitled to an adjustment in Contract Price equal to actual costs determined in accordance with Article 7.

7.3 *ADJUSTMENTS IN CONTRACT PRICE*

7.3.1 Adjustments in Contract Price are accomplished by Change Order and are based on one of the following methods:

- 7.3.1.1 mutual acceptance of fixed price, properly itemized and supported by sufficient data to permit evaluation;
- 7.3.1.2 unit prices stated in the Contract or subsequently agreed upon;
- 7.3.1.3 cost to be determined in a manner agreed upon by the Parties and mutually acceptable fixed or percentage fee; or
- 7.3.1.4 as provided in Paragraph 7.3.2.

7.3.2 If Contractor does not agree with a change in Contract Price or Contract Time or the method for adjusting them specified in the Work Change Directive within 21 days from date of the Work Change Directive's issuance, method and adjustment are determined by City Engineer. If Project Manager or Contractor disagree with City Engineer's determination they then may file a Claim in accordance with Section 4.4.

7.3.2.1 If City Engineer determines a method and adjustment in Contract Price under Paragraph 7.3.2, Contractor shall provide, in a form as City Engineer may prescribe, appropriate supporting data for items submitted under Paragraph 7.3.2. Failure to submit the data within 21 days of request for the data by City Engineer shall constitute waiver of a Claim.

7.3.2.2 Unless otherwise provided in the Contract, costs for the purposes of this Paragraph 7.3.2 are limited to the following:

- 7.3.2.2.1 costs of labor, including labor burden as stated below for social security, unemployment insurance, customary and usual fringe benefits required by agreement or custom, and Workers' Compensation insurance;
  - 7.3.2.2..1.1 the maximum labor burden applied to costs of labor for changes in the Work is 55 percent;
- 7.3.2.2.2 costs of materials, supplies, and equipment, including cost of transportation, whether incorporated or consumed;
- 7.3.2.2.3 rental costs of machinery and equipment, exclusive of hand tools, whether rented from Contractor or others, with prior approval of City Engineer;
- 7.3.2.2.4 costs of premiums for Bonds and insurance and permit fees related to the change in the Work;
- 7.3.2.2.5 additional costs of direct supervision of work and field office personnel directly attributable to the change; and
- 7.3.2.2.6 allowances for overhead and profit as stated below.
  - 7.3.2.2.6.1 the maximum allowances for overhead and profit on increases due to Change Orders:
  - 7.3.2.2.6.2 for changes in the Work performed by Contractor and Subcontractors, allowance for overhead and profit are applied to an amount equal to cost of all additions less cost of all deletions to the Work. Allowance for overhead to Contractor and first tier Subcontractors on changes performed by Subcontractors are applied to an amount equal to the sum of all increases to the Work by applicable Subcontractors.

	Overhead	Profit
to Contractor for change in the Work performed by Subcontractors:	10 percent	0 percent
to first tier Subcontractors for change in the Work performed by its Subcontractors:	10 percent	0 percent
to Contractor and Subcontractor for change in the Work performed by their respective firms:	10 percent	5 percent

7.3.3 If the City deletes or makes a change, which results in a net decrease in Contract Price, the City is entitled to a credit calculated in accordance with Paragraphs 7.3.1 and 7.3.2 and Subparagraphs 7.3.2.1, and 7.3.2.2.1 through 7.3.2.2.5. When both additions and credits covering related work or substitutions are involved in a change, allowance for overhead and profit is figured on the basis of a net increase, if any, with respect to that change in accordance with Subparagraph 7.3.2.2.6.

7.3.4 When Contractor agrees with the determination made by City Engineer concerning adjustments in Contract Price and Contract Time, or the Parties otherwise reach agreement upon the adjustments, the agreement will be immediately recorded by Change Order.

7.4 *MINOR CHANGES IN THE WORK*

7.4.1 A Minor Change in Work is binding on the Parties. Contractor shall acknowledge, in a written form acceptable to City Engineer, that there is no change in Contract Time or Contract Price and shall carry out the written orders promptly.

ARTICLE 8 - TIME

8.1 *PROGRESS AND COMPLETION*

8.1.1 Time is of the essence in the Contract. By executing the Contract, Contractor agrees that Contract Time is a reasonable period for performing the Work.

8.1.2 *Computation of Time:* In computing any period of time prescribed or allowed by the General Conditions, the day of the act, event, or default after which designated period of time begins to run is not to be included. Last day of the period so computed is to be included, unless it is a Sunday or Legal Holiday, in which event the period runs until end of next day which is not a Sunday or Legal Holiday. Sundays and Legal Holidays are considered to be days and are to be included in all other time computations relative to Contract Time.

8.1.3 Contractor may not commence the Work prior to the effective date of insurance and Bonds required by Article 11.

8.1.4 Contractor shall proceed expeditiously and without interruption, with adequate forces, and shall achieve Date of Substantial Completion within Contract Time.

8.1.5 Should progress of the Work fall behind construction schedule, except for reasons stated in Paragraph 8.2.1, Contractor shall promptly submit at the request of Project Manager, updated construction schedule to City Engineer for approval. Contractor's failure to submit updated schedule may, at City Engineer's discretion, constitute a material breach of the Contract. Contractor shall take action necessary to restore progress by working the hours, including night shifts and lawful overtime operations as necessary, to achieve Date of Substantial Completion within Contract Time.

8.1.6 Except in connection with safety or protection of persons or the Work or property at the site or adjacent to the site, and except as otherwise indicated in the Contract, all the Work at the site will be performed Monday through Saturday between the hours of 7:00 a.m. and 7:00 p.m. Contractor may not perform work between 7:00 p.m. and 7:00 a.m., on a Sunday, or on a Legal Holiday, without giving City Engineer 24-hour prior written notice and receiving written consent of City Engineer.

8.2 *DELAYS AND EXTENSIONS OF TIME*

8.2.1 Contractor may request extension of Contract Time for a delay in performance of work that arises from causes beyond control and without fault or negligence of Contractor. Examples of these causes are:

- 8.2.1.1 acts of God or of the public enemy;
- 8.2.1.2 acts of government in its sovereign capacity;
- 8.2.1.3 fires;
- 8.2.1.4 floods;
- 8.2.1.5 epidemics;
- 8.2.1.6 quarantine restrictions;
- 8.2.1.7 strikes;
- 8.2.1.8 freight embargoes;
- 8.2.1.9 unusually severe weather; and
- 8.2.1.10 discovery of Pollutants or Pollutant Facilities at the site.

8.2.2 For any reason other than those listed in Section 4.3.6.2, if the Contractor's work is delayed in any manner or respect, the Contractor shall have no claim for damages and shall have no right of additional compensation from the City by reason of any delay or increased expense to the Contractor's work, except for an extension of time as provided in this provision.

8.2.3 Contractor may request an extension of Contract Time for delay only if:

8.2.3.1 delay is caused by failure of Subcontractor or Supplier to perform or make progress; and

8.2.3.2 cause of failure is beyond control of both Contractor and Subcontractor or Supplier.

8.2.4 Claims relating to Contract Time must be made in accordance with Paragraph 4.3.7.

8.2.5 Claims for extending or shortening Contract Time are based on written notice promptly delivered by the Party making Claim to other Party. Claim must accurately describe occurrence generating Claim, and a statement of probable effect on progress of the Work.

8.2.6 Claims for extension of Contract Time are considered only when a Claim is filed within the time limits stated in Paragraph 4.3.3.

8.2.6.1 Notwithstanding paragraph 4.3.3, an extension of time for delays under this paragraph may be granted only upon written application by the Contractor within 48 hours from the claimed delay.

8.2.7 Written notice of Claim must be accompanied by claimant's written statement that adjustment claimed is entire adjustment to which claimant is entitled as a result of the occurrence of the event. When the Parties cannot agree, Claims for adjustment in Contract Time are determined by City Engineer in accordance with Section 4.4.

8.2.8 Adjustments to Contract Time are accomplished by Change Order.

ARTICLE 9 - PAYMENTS AND COMPLETION

9.1 *UNIT PRICE WORK*

9.1.1 Where the Contract provides that all or part of the Work is based on Unit Prices, the Original Contract Price includes, for all Unit Price work, an amount equal to the sum of Unit Prices times Unit Price Quantities for each separately identified item of Unit Price work.

9.1.2 Each Unit Price includes an amount to cover Contractor's overhead and profit for each separately identified item.

9.1.3 The Contractor may not make a Claim against the City for excess or deficiency in Unit Price Quantities provided in the Contract, except as provided in Subparagraph 9.1.4. Payment at the prices stated in the Contract is in full for the completed work. Contractor is not entitled to additional payment for materials, supplies, labor, tools, machinery and all other expenditures incidental to satisfactory completion of the Work.

9.1.4 City Engineer may increase or decrease quantities of the Work within limitations stated in Paragraph 7.1.2. Contractor is entitled to payment for actual quantities of items provided at Unit Prices set forth in the Contract.

9.1.5 Where the final quantity of work performed by Contractor on Major Unit Price Work item differs by more than 25 percent from quantity of the item stated in the Contract, a Party may request an adjustment in Unit Price, for the portion that differs by more than 25 percent, by a Change Order under Section 7.3.

9.2 *ESTIMATES FOR PAYMENT, UNIT PRICE WORK*

9.2.1 Following the day of each month indicated in the Contract, Project Manager will prepare a Certificate for Payment for the preceding monthly period based on estimated units of work completed. Prior to preparing Certificate of Payment, Contractor shall have submitted to City Engineer, on a form approved by the Director of the Office of Business Opportunity, evidence satisfactory to the City Engineer of payments made to Subcontractors and Suppliers for the month preceding the month for which the Certificate for Payment is prepared, including evidence of electronic submission of certified payrolls.

9.2.2 Before final completion, City Engineer will review and confirm with Contractor the actual final installed Unit Price quantities. City Engineer's determination of actual final installed Unit Price quantities will be included in the final Certificate for Payment and any previous underpayments and overpayments will be reconciled with the actual final Unit Price quantities. Contractor shall file written notice of intent to appeal, if any, City Engineer's

determination within 10 days of receipt of final Certificate for Payment. Upon expiration of the 10-day period, City Engineer's decision is final and binding on the Parties. If Contractor submits notice within the 10-day period, Contractor shall submit a Claim in accordance with Section 4.4.

9.3 *STIPULATED PRICE WORK*

9.3.1 For work contracted on a Stipulated Price basis, 10 days before submittal of first Application for Payment, Contractor shall submit to City Engineer a Schedule of Values allocated to various portions of the Work, prepared in the form and supported by the data as City Engineer may require to substantiate its accuracy. This schedule, as approved by City Engineer, is used as a basis for approval of Contractor's Applications for Payment.

9.4 *APPLICATIONS FOR PAYMENT, STIPULATED PRICE WORK*

9.4.1 For work contracted on a Stipulated Price basis, Contractor shall submit Applications for Payment to City Engineer each month on a form acceptable to City Engineer in accordance with Schedule of Values. Application must indicate percentages of completion of each portion of the Work listed in Schedule of Values as of the end of the period covered by the Application for Payment.

9.4.2 Applications for Payment must be supported by substantiating data as City Engineer may require and must reflect retainages as provided below. Evidence satisfactory to the City Engineer of payments made to Subcontractors and Suppliers for the month preceding the month for which the Application for Payment is submitted must accompany each Application for Payment on a form approved by the Director of the Office of Business Opportunity. Evidence of electronic submission of certified payrolls must be included. Application must be sworn and notarized.

9.5 *CERTIFICATES FOR PAYMENT*

9.5.1 City Engineer will, within 10 days after the date specified in the Contract for Unit Price work, or upon receipt of Contractor's Application for Payment for Stipulated Price work, issue a Certificate for Payment for work based on amount which City Engineer determines is properly due, with copy to Contractor.

9.5.2 Unless otherwise provided in the Contract, payment for completed work and for properly stored Products is conditioned upon compliance with procedures satisfactory to City Engineer to protect the City's interests. Procedures will include applicable insurance, storage, and transportation to site for materials and equipment stored off-site. Contractor is responsible for maintaining materials and equipment until Date of Substantial Completion.

9.5.3 Contractor shall document its use of Ultra Low Sulfur Diesel Fuel by providing invoices and receipts evidencing Contractor's use.

9.6 *COMPUTATIONS OF CERTIFICATES FOR PAYMENT*

9.6.1 Subject to the provisions of the Contract, the amount of each Certificate for Payment is calculated as follows:

9.6.1.1 that portion of Contract Price allocated to completed work as determined by:

9.6.1.1.1 multiplying the percentage of completion of each portion of the Work listed in the Schedule of Values by the value of that portion of the Work, or

9.6.1.1.2 multiplying Unit Price quantities Installed times the Unit Prices listed in the Contract;

9.6.1.2 plus progress payments for completed work that has been properly authorized by Modifications;

9.6.1.3 less retainage of five percent;

9.6.1.4 plus actual costs, properly substantiated by certified copies of invoices and freight bills, of non-perishable materials and equipment delivered and properly stored, if approved in advance by Project Manager, less 15 percent;

9.6.1.5 less any previous payments by the City.

9.7 *DECISIONS TO WITHHOLD CERTIFICATION*

9.7.1 City Engineer may decline to certify payment and may withhold payment in whole or in part to the extent reasonably necessary to protect the City if, in City Engineer's opinion, there is reason to believe that:

9.7.1.1 nonconforming work has not been remedied;

9.7.1.2 the Work cannot be completed for unpaid balance of Contract Price;

9.7.1.3 there is damage to the City or another contractor;

9.7.1.4 the Work will not be completed within Contract Time and that unpaid balance

will not be adequate to cover actual and liquidated damages;

9.7.1.5 probable evidence that third party claims will be filed in court, in arbitration, or otherwise;

9.7.1.6 Contractor has failed to make payments to Subcontractors or Suppliers for labor, material, or equipment; or

9.7.1.7 Contractor has persistently failed to carry out work in accordance with the Contract.

9.7.1.8 Contractor has not paid Subcontractors or Suppliers because of a payment dispute; or

9.7.1.9 Contractor has failed to provide satisfactory evidence described in Paragraphs 9.2.1, 9.4.2, and 9.8.2.

9.7.2 When the above reasons for withholding certification are removed, certification will be made for amounts previously withheld.

9.7.3 City Engineer may decline to certify payment and may withhold request for payment in whole or in part upon failure of Contractor to submit initial construction schedule or monthly schedule updates, as required in Paragraphs 3.15.1 and 3.15.3.

9.8 *PROGRESS PAYMENTS*

9.8.1 The City will make payment, in an amount certified by City Engineer, within 20 days after City Engineer has issued a Certificate for Payment.

9.8.2 The City has no obligation to pay or to facilitate the payment to a Subcontractor or Supplier, except as may otherwise be required by law. Contractor shall comply with the prompt payment requirements of Chapter 2251 of the Government Code. State law requires payment of Subcontractors and Suppliers by Contractor within 7 calendar days of Contractor's receipt of payment from the City, unless there is a payment dispute between Contractor and a Subcontractor or Supplier evidenced on a form approved by the Director of Mayor's Office of Business Opportunity and submitted to the City Engineer each month with Application for Payment or Estimate for Payment. **CONTRACTOR SHALL DEFEND AND INDEMNIFY THE CITY FROM ANY CLAIMS OR LIABILITY ARISING OUT OF CONTRACTOR'S FAILURE TO MAKE THESE PAYMENTS.**

9.8.2.1 The City may, upon request and at the discretion of City Engineer, furnish to Subcontractor information regarding percentages of completion or the amounts applied for by Contractor, and action taken thereon by the City because of work done by the Subcontractor.

9.8.2.2 Contractor shall prepare and submit to City Engineer a Certification of Payment to Subcontractors and Suppliers form to be attached to each monthly Estimate for Payment or Application for Payment.

9.8.3 A Certificate for Payment, a progress payment, or partial or entire use or occupancy of the Work by the City, does not constitute acceptance of work which is not in accordance with the Contract.

9.9 *DATE OF SUBSTANTIAL COMPLETION*

9.9.1 When Contractor considers the Work, or a portion thereof designated by City Engineer, to be substantially complete, Contractor shall prepare and submit to Project Manager a comprehensive punch list of items to be completed or corrected. Failure to include an item on the punch list does not alter the responsibility of Contractor to comply with the Contract.

9.9.1.1 By submitting the punch list to Project Manager, Contractor represents that work on the punch list will be completed within the time provided for in Subparagraph 9.9.4.3.

9.9.2 Upon receipt of Contractor's punch list, Project Manager will inspect the Work, or designated portion thereof, to verify that the punch list contains all items needing completion or correction. If Project Manager's inspection discloses items not on Contractor's punch list, the items must be added to the punch list of items to be completed or corrected. If Project Manager's inspection reveals that Contractor is not yet substantially complete, Contractor shall complete or correct the deficiencies and request another inspection by Project Manager. The City may recover the costs of re-inspection from Contractor.

9.9.3 Prior to City Engineer's issuing a Certificate of Substantial Completion, Contractor shall also provide:

9.9.3.1 Certificate of Occupancy for new construction, or Certificate of Compliance for remodeled work, as applicable, and

9.9.3.2 compliance with Texas Accessibility Standards through state inspection of the Work, if required. If Contractor calls for inspection in a timely manner and the inspection is delayed through no fault of Contractor, and City Engineer so confirms, City Engineer may, upon request by Contractor, add the inspection to the punch list in Paragraph 9.9.2 and issue a Certificate of Substantial Completion.

9.9.4 When the Work, or designated portion thereof, is determined by City Engineer to be sufficiently complete in accordance with the Contract so the City can occupy or utilize the Work, or designated portion thereof, for the purpose for which it is intended, City Engineer will prepare a Certificate of Substantial Completion that incorporates the punch list in Paragraph 9.9.2 and establishes:

9.9.4.1 Date of Substantial Completion;

9.9.4.2 responsibilities of the Parties for security, maintenance, heating, ventilating and air conditioning, utilities, damage to the Work, and insurance; and

9.9.4.3 fixed time within which Contractor shall complete all items on punch list of items to be corrected accompanying the certificate.

9.9.5 Warranties required by the Contract shall commence on the Date of Substantial Completion unless otherwise provided by City Engineer in Certificate of Substantial Completion. Warranties may not commence on items not substantially completed.

9.9.6 After Date of Substantial Completion and upon application by Contractor and approval by City Engineer, the City may make payment, reflecting adjustment in retainage, if any, as follows:

9.9.6.1 with the consent of Surety, the City may increase payment to Contractor to 96 percent of Contract Price, less value of items to be completed and accrued liquidated damages.

9.9.7 Contractor shall complete or correct the items in Paragraph 9.9.2 within the time period set out in the Certificate of Substantial Completion. If Contractor fails to do so, the City may issue a Notice of Noncompliance and proceed according to Section 2.5.

9.10 *PARTIAL OCCUPANCY OR USE*

9.10.1 The City may occupy or use any completed or partially completed portion of the Work at any stage, provided the occupancy or use is consented to by Contractor and Contractor's insurer and authorized by public authorities having jurisdiction over the Work. Consent of Contractor to partial occupancy or use may not be unreasonably withheld.

9.10.2 Immediately prior to the partial occupancy or use, Project Manager and Contractor shall jointly inspect the area to be occupied or portion of the Work to be used to determine and record condition of the Work.

9.10.3 Partial occupancy or use of a portion of the Work does not constitute acceptance of work not in compliance with requirements of the Contract.

9.11 *FINAL COMPLETION AND FINAL PAYMENT*

9.11.1 Contractor shall review the Contract and inspect the Work prior to Contractor notification to City Engineer that the Work is complete and ready for final inspection. Contractor shall submit affidavit that the Work has been inspected and that the Work is complete in accordance with requirements of the Contract.

9.11.2 Project Manager will make final inspection within 15 days after receipt of Contractor's written notice that the Work is ready for final inspection and acceptance. If Project Manager finds the Work has been completed in accordance with the Contract, Contractor shall submit items set out in Paragraph 9.11.4 and, for stipulated price contracts, a final Application for Payment. City Engineer will, within 10 days, issue Certificate of Final Completion stating that to the best of City Engineer's knowledge, information, and belief, the Work has been completed in accordance with the Contract, and will recommend acceptance of the Work by City Council.

9.11.3 Should work be found not in compliance with requirements of the Contract, City Engineer will notify Contractor in writing of items of noncompliance. Upon inspection and acceptance of the corrections by Project Manager, compliance with all procedures of Paragraph 9.11.2, and Contractor's submission of the items set out in Paragraph 9.11.4, the City Engineer will issue Certificate of Final Completion to Contractor as provided in Paragraph 9.11.2.

9.11.4 Contractor shall submit the following items to City Engineer before City Engineer will issue a Certificate of Final Completion:

9.11.4.1 affidavit that payrolls, invoices for materials and equipment, and other indebtedness of Contractor connected

with the Work, less amounts withheld by the City, have been paid or otherwise satisfied. If required by City Engineer, Contractor shall submit further proof including waiver or release of lien or claims from laborers or Suppliers of Products;

9.11.4.2 certificate evidencing that insurance required by the Contract to remain in force after final payment is currently in effect, will not be canceled or materially changed until at least 30 days written notice has been given to the City;

9.11.4.3 written statement that Contractor knows of no substantial reason that insurance will not be renewable to cover correction and warranty period required by the Contract;

9.11.4.4 consent of Surety to final payment; and

9.11.4.5 copies of record documents, maintenance manuals, tests, inspections, and approvals.

Upon City Engineer's issuance of a Certificate of Final Completion, Contractor may request increase in payment to 99 percent of Contract Price, less accrued liquidated damages.

9.11.5 If Contractor fails to submit required items in Paragraph 9.11.4 within 10 days of Project Manager's inspection of the Work under Paragraph 9.11.2 or Paragraph 9.11.3, City Engineer may, but is not obligated to:

9.11.5.1 deduct liquidated damages accrued from monies held;

9.11.5.2 proceed to City Council for acceptance of the Work, minus some or all of the items Contractor fails to submit under Paragraph 9.11.4; and,

9.11.5.3 upon acceptance by City Council of the portion of the Work completed, make final payment as set out in Paragraph 9.11.8.

9.11.6 If final completion is materially delayed through no fault of Contractor, or by issuance of Change Orders affecting date of final completion, and City Engineer so confirms, the City may, upon application by Contractor and certification by City Engineer, and without terminating the Contract, make payment of balance due for that portion of the Work fully completed and accepted.

9.11.7 If remaining balance due for work not corrected is less than retainage stipulated in the Contract, Contractor shall submit to City Engineer written consent of Surety to payment of balance due for that portion of the Work fully completed and accepted, prior to certification of the payment. The payment is made under terms governing final payment, except that it does not constitute waiver of Claims.

9.11.8 The City will make final payment to Contractor within 30 days after acceptance of the Work by City Council, subject to limitations, if any, as stated in the Contract.

9.11.9 Acceptance of final payment by Contractor shall constitute a waiver of all Claims, whether known or unknown, by Contractor, except those previously made in writing and identified by Contractor as unsettled at time of final Application for Payment.

9.12 *LIQUIDATED DAMAGES*

9.12.1 Contractor, Surety, and the City agree that failure to complete the Work within Contract Time will cause damages to the City and that actual damages from harm are difficult to estimate accurately. Therefore, Contractor, Surety, and the City agree that Contractor and Surety are liable for and shall pay to the City the amount stipulated in Supplementary Conditions as liquidated damages, and that the amount of damages fixed therein is a reasonable forecast of just compensation for harm to the City resulting from Contractor's failure to complete the Work within Contract Time. The amount stipulated will be paid for each day of delay beyond Contract Time until Date of Substantial Completion.

9.12.2 Contractor shall pay the City an amount equal to $1,200.00 per diesel operating vehicle or piece of motorized equipment per incident of high sulfur diesel fuel usage.

ARTICLE 10 - SAFETY PRECAUTIONS

10.1 *SAFETY PROGRAMS*

10.1.1 Contractor is responsible for initiating, maintaining, and supervising all safety precautions and programs in connection with performance of the Contract. Contractor shall submit a safety program to City Engineer prior to mobilizing for the Work, and is solely responsible for safety, efficiency, and adequacy of ways, means, and methods, and for damage which might result from failure or improper construction, maintenance, or operation performed by Contractor.

10.2 *POLLUTANTS AND POLLUTANT FACILITIES*

10.2.1 If Contractor encounters material on-site which it reasonably believes to be a Pollutant or facilities which it reasonably believes to be a Pollutant Facility, Contractor shall immediately stop work in affected area and immediately notify City Engineer, confirming the notice thereafter in writing.

10.2.2 If City Engineer determines that the material is a Pollutant or facility is a Pollutant Facility, work in affected area may not be resumed except by Modification, and only if the work would not violate applicable laws or regulations.

10.2.3 If City Engineer determines that the material is not a Pollutant or a facility is not a Pollutant Facility, work in affected area will be resumed upon issuance of a Modification.

10.2.4 Contractor is not required to perform, unless authorized by Change Order, work relating to Pollutants or Pollutant Facilities except for that work relating to Pollutants or Pollutant Facilities specified in the Contract.

10.3 *SAFETY OF THE ENVIRONMENT, PERSONS, AND PROPERTY*

10.3.1 Contractor shall take reasonable precautions for safety and shall provide reasonable protection to prevent damage, injury, or loss from all causes, to:

10.3.1.1 employees performing work on-site, and other persons who may be affected thereby;

10.3.1.2 work, including Products to be incorporated into the Work, whether in proper storage, under control of Contractor or Subcontractor; and

10.3.1.3 other property at or adjacent to the site, such as trees, shrubs, lawns, walks, pavements, roadways, structures, utilities, and Underground Facilities not designated for removal or replacement in course of construction.

10.3.2 Contractor shall give notices and comply with applicable laws, ordinances, rules, regulations, and lawful orders of public authorities bearing on safety of persons, property, or environment.

10.3.2.1 Contractor shall comply with requirements of Underground Facility Damage Prevention and Safety Act TEX. UTIL. CODE ANN. Ch. 251 (Vernon Supp. 2002).

10.3.2.2 Contractor shall comply with all safety rules and regulations of the Federal Occupational Health and Safety Act of 1970 and subsequent amendments (OSHA).

10.3.3 Contractor shall erect and maintain, as required by existing conditions and performance of the Contract, reasonable safeguards for safety and protection of persons and property, including posting danger signs and other warnings against hazards, promulgating safety regulations, and notifying owners and users of adjacent sites and utilities.

10.3.4 Contractor shall designate responsible member of Contractor's organization at site whose duty is prevention of accidents. This person will be Contractor's Superintendent unless otherwise designated by Contractor in writing to City Engineer.

10.3.5 Contractor shall prevent windblown dust and may not burn or bury trash debris or waste products on-site. Contractor shall prevent environmental pollution, including but not limited to particulates, gases and noise, as a result of the Work.

10.3.6 When use or storage of hazardous materials or equipment, or unusual methods are necessary for execution of the Work, Contractor shall exercise utmost care and carry on the activities under supervision of properly qualified personnel.

10.3.7 Contractor shall promptly remedy damage and loss to property referred to in Subparagraphs 10.3.1.2 and 10.3.1.3, caused in whole or in part by Contractor, or Subcontractors, which is not covered by insurance required by the Contract. Contractor is not required to remedy damage or loss attributable to the City, Design Consultant, or other contractors.

10.4 *EMERGENCIES*

10.4.1 In emergencies affecting safety of persons or property, Contractor shall act at Contractor's discretion to prevent imminent damage, injury, or loss. Additional compensation or extension of time claimed by Contractor because of emergencies are determined as provided in Article 7.

ARTICLE 11 - INSURANCE AND BONDS

11.1 *GENERAL INSURANCE REQUIREMENTS*

11.1.1 With no intent to limit Contractor's liability under indemnification provisions set forth in Paragraphs 3.25 and 3.26, Contractor shall provide and maintain in full force and effect during term of the Contract and all extensions and amendments thereto, at least the following insurance and available limits of liability.

11.1.2 If any of the following insurance is written as "claims made" coverage and the City is required to be carried as additional insured, then Contractor's insurance shall include a two-year extended discovery period after last date that Contractor provides any work under the Contract.

11.1.3 Aggregate amounts of coverage, for purposes of the Contract, are agreed to be amounts of coverage available during fixed 12-month policy period.

11.2 *INSURANCE TO BE PROVIDED BY CONTRACTOR*

11.2.1 *Risks and Limits of Liability:* Contractor shall maintain the insurance coverages in the listed amounts, as set out in Table 1.

11.2.2 If Limit of Liability for Excess Coverage is $2,000,000 or more, Limit of Liability for Employer's Liability may be reduced to $500,000.

11.2.3 *Insurance Coverage*: At all times during the term of this Contract and any extensions or renewals, Contractor shall provide and maintain insurance coverage that meets the Contract requirements. Prior to beginning performance under the Contract, at any time upon the Director's request, or each time coverage is renewed or updated, Contractor shall furnish to the Director current certificates of insurance, endorsements, all policies, or other policy documents evidencing adequate coverage, as necessary. Contractor shall be responsible for and pay (a) all premiums and (b) any claims or losses to the extent of any deductible amounts. Contractor waives any claim it may have for premiums or deductibles against the City, its officers, agents, or employees. Contractor shall also require all subcontractors or consultants whose subcontracts exceed $100,000 to provide proof of insurance coverage meeting all requirements stated above except amount. The amount must be commensurate with the amount of the subcontract, but no less than $500,000 per claim.

11.2.4 *Form of insurance*: The form of the insurance shall be approved by the Director and the City Attorney; such approval (or lack thereof) shall never (a) excuse non-compliance with the terms of this Section, or (b) waive or estop the City from asserting its rights to terminate this Contract. The policy issuer shall (1) have a Certificate of Authority to transact insurance business in Texas, or (2) be an eligible non-admitted insurer in the State of Texas and have a Best's rating of at least B+, and a Best's Financial Size Category of Class VI or better, according to the most current Best's Key Rating Guide. Each insurer is subject to approval by City Engineer in City Engineer's sole discretion as to conformance with these requirements.

11.2.5 *Required Coverage*: The City shall be an Additional Insured under this Contract, and all policies except Professional Liability and Worker's Compensation must name the City as an Additional Insured. Contactor waives any claim or right of subrogation to recover against the City, its officers, agents, or employees, and each of Contractor's insurance policies except professional liability must contain coverage waiving such claim. Each policy, except Workers' Compensation and Professional Liability, must also contain an endorsement that the policy is primary to any other insurance available to the Additional Insured with respect to claims arising under this Contract. If professional liability coverage is written on a "claims made" basis, Contractor shall also provide proof of renewal each year for two years after substantial completion of the Project, or in the alternative: evidence of extended reporting period coverage for a period of two years after substantial completion, or a project liability policy for the Project covered by this Contract with a duration of two years after substantial completion.

11.2.6 *Deductibles:* Contractor assumes and bears any claims or losses to extent of deductible amounts and waives any claim it may ever have for same against the City, its officers, agents, or employees.

11.2.7 *Notice*: **CONTRACTOR SHALL GIVE 30 DAYS' ADVANCE WRITTEN NOTICE TO THE DIRECTOR IF ANY OF ITS INSURANCE POLICIES ARE CANCELED OR NON-RENEWED**. Within the 30-day period, Contractor shall provide other suitable policies in order to maintain the required coverage. If Contractor does not comply with this requirement, the Director, at his or her sole discretion, may immediately suspend Contractor from any further performance under this Agreement and begin procedures to terminate for default.

11.2.8 *Subrogation:* Contractor waives any claim or right of subrogation to recover against the City, its officers, agents, or employees. Each policy,

except professional liability, must contain an endorsement waiving such claim.

11.2.9 *Endorsement of Primary Insurance:* Each policy, except Workers' Compensation policies, must contain an endorsement that the policy is primary insurance to any other insurance available to additional insured with respect to claims arising hereunder.

11.2.10 *Liability for Premium:* Contractor is solely responsible for payment of all insurance premium requirements hereunder and the City is not obligated to pay any premiums.

11.2.11 *Additional Requirements for Workers' Compensation Insurance Coverage:* Contractor shall, in addition to meeting the obligations set forth in Table 1, maintain throughout the term of the Contract Workers' Compensation coverage as required by statute, and Contractor shall specifically comply with requirements set forth in Paragraph 11.2.10. The definitions set out below shall apply only for purposes of this Paragraph 11.2.10.

11.2.12 Definitions:

11.2.12.1 *Certificate of Coverage:* A copy of certificate of insurance, or coverage agreement (TWCC-81, TWCC-82, TWCC-83, or TWCC-84), showing statutory Workers' Compensation insurance coverage for Contractor's, Subcontractor's, or Supplier's employees providing services for the duration of the Contract.

11.2.12.2 *Duration of the Work:* Includes the time from Date of Commencement of the Work until Contractor's work under the Contract has been completed and accepted by City Council.

11.2.12.3 *Persons providing services for the Work (Subcontractor in Texas Labor Code § 406.096):* includes all persons or entities performing all or part of services Contractor has undertaken to perform on the Work, regardless of whether that person contracted directly with Contractor and regardless of whether that person has employees. This includes, without limitation, independent contractors, subcontractors, leasing companies, motor carriers, owner-operators, employees of the entity, or employees of entity which furnishes persons to provide services on the Work. Services include, without limitation, providing, hauling, or delivering equipment or materials, or providing labor, transportation, or other service related to the Work. Services do not include activities unrelated to the Work, such as food/beverage vendors, office supply deliveries, and delivery of portable toilets.

11.2.13 Contractor shall provide coverage, based on proper reporting of classification codes and payroll amounts and filing of coverage agreements, which meets the statutory requirements of TEX. LAB. CODE ANN., Section 401.011(44) for employees of Contractor providing services on the Work, for duration of the Work.

11.2.14 Contractor shall provide a Certificate of Coverage to the City prior to being awarded the Contract.

11.2.15 If coverage period shown on Contractor's original Certificate of Coverage ends during duration of the Work, Contractor shall file new Certificate of Coverage with the City showing that coverage has been extended.

11.2.16 Contractor shall obtain from each person providing services on the Work, and provide to City Engineer:

11.2.16.1 Certificate of Coverage, prior to that person beginning work on the Work, so the City will have on file Certificates of Coverage showing coverage for all persons providing services on the Work; and

11.2.16.2 no later than seven days after receipt by Contractor, new Certificate of Coverage showing extension of coverage, if coverage period shown on current Certificate of Coverage ends during the duration of the Work.

11.2.17 Contractor shall retain all required Certificates of Coverage for the duration of the Work and for one year thereafter.

11.2.18 Contractor shall notify City Engineer in writing by certified mail or personal delivery, within 10 days after Contractor knew or should have known, of any change that materially affects provision of coverage of any person providing services on the Work.

11.2.19 Contractor shall post on-site a notice, in text, form and manner prescribed by Texas Workers'

Compensation Commission, informing all persons providing services on the Work that they are required to be covered, and stating how person may verify coverage and report lack of coverage.

11.2.20 Contractor shall contractually require each person with whom it contracts to provide services on the Work to:

11.2.20.1 provide coverage, based on proper reporting of classification codes, payroll amounts and filing of any coverage agreements, which meets statutory requirements of TEX. LAB. CODE ANN., Section 401.011(44) for all its employees providing services on the Work, for the duration of the Work;

11.2.20.2 provide to Contractor, prior to that person's beginning work on the Work, a Certificate of Coverage showing that coverage is being provided for all employees of the person providing services on the Work, for the duration of the Work;

11.2.20.3 provide Contractor, prior to the end of the coverage period, a new Certificate of Coverage showing extension of coverage, if the coverage period shown on the current Certificate of Coverage ends during the duration of the Work;

11.2.20.4 obtain from each other person with whom it contracts, and provide to Contractor: (1) Certificate of Coverage, prior to other person's beginning work on the Work; and (2) new Certificate of Coverage showing extension of coverage, prior to end of coverage period, if coverage period shown on the current Certificate of Coverage ends during duration of the Work.

11.2.20.5 retain all required Certificates of Coverage on file for the duration of the Work and for one year thereafter;

11.2.20.6 notify City Engineer in writing by certified mail or personal delivery within 10 days after person knew, or should have known, of change that materially affects provision of coverage of any person providing services on the Work; and

11.2.20.7 contractually require each person with whom it contracts to perform as required by Paragraphs 11.2.10.1 through 11.2.10.7, with Certificates of Coverage to be provided to person for whom they are providing services.

11.2.21 By signing the Contract or providing or causing to be provided a Certificate of Coverage, Contractor is representing to the City that all employees of Contractor who will provide services on the Work will be covered by Workers' Compensation coverage for the duration of the Work, that coverage will be based on proper reporting of classification codes and payroll amounts, and that all coverage agreements will be filed with appropriate insurance carrier. Contractor is not allowed to self-insure Workers' Compensation. Contractor may be subject to administrative penalties, criminal penalties, civil penalties, or other civil actions for providing false or misleading information.

11.2.22 Contractor's failure to compiy with Paragraph 11.2.10 is a breach of the Contract by Contractor, which entitles the City to declare the Contract void if Contractor does not remedy breach within 10 days after receipt of notice of breach from City Engineer.

11.2.23 *Subcontractor Insurance Requirements:* Contractor shall require Subcontractors and Suppliers to obtain Commercial General Liability, Workers' Compensation, Employer's Liability and Automobile Liability coverage that meets all the requirements of Paragraph 11.2. The amount must be commensurate with the amount of the subcontract, but not less than $500,000 per occurrence. Contractor shall require all Subcontractors with whom it contracts directly, whose subcontracts exceed $100,000, to provide proof of Commercial General Liability and Automobile Liability insurance coverage meeting the above requirements. Contractor shall comply with all requirements set out under Paragraph 11.2.10 as to Workers' Compensation Insurance for all Subcontractors and Suppliers.

REQUIRED COVERAGE

(Coverage)	(Limit of Liability)
.1 Workers' Compensation	• Statutory Limits for Workers' Compensation
.2 Employer's Liability	• Bodily Injury by Accident $1,000,000 (each accident) • Bodily Injury by Disease $1,000,000 (policy limit) • Bodily Injury by Disease $1,000,000 (each employee)
.3 Commercial General Liability: Including Contractor's Protective, Broad Form Property Damage, Contractual Liability, Explosion, Underground and Collapse, Bodily Injury, Personal Injury, Products, and Completed Operations (for a period of one year following completion of the Work).	• Combined single limit of $1,000,000 (each occurrence), subject to general aggregate of $1,000,000; • Products and Completed Operations $1,000,000 aggregate.
.4 Owner's and Contractor's Protective Liability	• $1,000,000 combined single limit each Occurrence/ aggregate
.5 Installation Floater (Unless alternative coverage approved by City Attorney)	• Value of stored material or equipment, listed on Certificates of Payments, but not yet incorporated into the Work
.6 Automobile Liability Insurance: (For automobiles furnished by Contractor in course of his performance under the Contract, including Owned, Non-owned, and Hired Auto coverage)	• $1,000,000 combined single limit each occurrence for (1) Any Auto or (2) All Owned, Hired, and Non-Owned Autos
.7 Excess Coverage	• $1,000,000 each occurrence/combined aggregate in excess of limits specified for Employer's Liability, Commercial General Liability, and Automobile Liability
Aggregate Limits are per 12-month policy period unless otherwise indicated.	

11.3 *PROOF OF INSURANCE*

11.3.1 Prior to commencing services and at time during the term of the Contract, Contractor shall furnish City Engineer with Certificates of Insurance, along with Affidavit from Contractor confirming that Certificate accurately reflects insurance coverage that is available during term of the Contract. If requested in writing by City Engineer, Contractor shall furnish City Engineer with certified copies of Contractor's actual insurance policies. Failure of Contractor to provide certified copies, as requested, may be deemed, at City Engineer's or City Attorney's discretion, a material breach of the Contract.

11.3.2 Notwithstanding the proof of insurance requirements, Contractor shall continuously maintain in effect required insurance coverage set forth in Paragraph 11.2. Failure of Contractor to comply with this requirement does constitute a material breach by Contractor allowing the City, at its option, to immediately suspend or terminate work, or exercise any other remedy allowed under the Contract. Contractor agrees that the City has not waived or is not estopped to assert a material breach of the Contract because of any acts or omissions by the City regarding its review or non-review of insurance documents provided by Contractor, its agents, employees, or assigns.

11.3.3 Contractor shall provide updated certificates of insurance to the Director upon request. The Contractor shall be responsible for delivering a current certificate of insurance in the proper form to the Director as long as Contractor is required to furnish insurance coverage under Paragraph 11.2.

11.3.4 Every certificate of insurance Contractor delivers in connection with this Contract shall

11.3.4.1 be less than 12 months old;

11.3.4.2 include all pertinent identification information for the Insurer, including the company name and address, policy

number, NAIC number or AMB number, and authorized signature;

11.3.4.3 include in the Certificate Holder Box the Project name and reference numbers, contractor's email address, and indicates the name and address of the Project Manager;

11.3.4.4 include the Contractor's email address in the Certificate Holder Box;

11.3.4.5 include the Project reference numbers on the City address so the Project reference number is visible in the envelope window; and

11.3.4.6 be appropriately marked to accurately identify all coverages and limits of the policy, effective and expiration dates, and waivers of subrogation in favor of the City for Commercial General Liability, Automobile Liability, and Worker's Compensation/Employers' Liability.

11.4 *PERFORMANCE AND PAYMENT BONDS*

11.4.1 For Contracts over the value of $25,000, Contractor shall provide Bonds on the City's standard forms covering faithful performance of the Contract and payment of obligations arising thereunder as required in the Contract pursuant to Chapter 2253 of the Government Code. The Bonds must be for 100 percent of Original Contract Price and in accordance with conditions stated on standard City Performance and Payment Bond and Statutory Payment Bond forms. Bonds may be obtained from Contractor's usual source and cost for the Bonds are included in Contract Price.

11.5 *MAINTENANCE BONDS*

11.5.1 *One-year Maintenance Bond:* Contractor shall provide Bond on standard City One-year Maintenance Bond form, providing for Contractor's correction, replacement, or restoration of any portion of the Work which is found to be not in compliance with requirements of the Contract during one-year correction period required in Paragraph 12.2. The Maintenance Bond must be for 100 percent of the Original Contract Price.

11.6 *SURETY*

11.6.1 A Bond that is given or tendered to the City pursuant to the Contract must be executed by a surety company that is authorized and admitted to write surety Bonds in the State of Texas.

11.6.2 If a Bond is given or tendered to the City pursuant to the Contract in an amount greater than 10 percent of Surety's capital and surplus, Surety shall provide certification that Surety has reinsured that portion of the risk that exceeds 10 percent of Surety's capital and surplus. The reinsurance must be with one or more reinsurers who are duly authorized, accredited, or trusted to do business in the State of Texas. The amount reinsured by reinsurer may not exceed 10 percent of reinsurer's capital and surplus. The amount of allowed capital and surplus must be based on information received from State Board of Insurance.

11.6.3 If the amount of a Bond is greater than $100,000, Surety shall:

11.6.3.1 also hold certificate of authority from the United States Secretary of Treasury to qualify as surety on obligations permitted or required under federal law; or,

11.6.3.2 Surety may obtain reinsurance for any liability in excess of $100,000 from reinsurer that is authorized and admitted as a reinsurer in the State of Texas and is the holder of a certificate of authority from the United States Secretary of the Treasury to qualify as surety or reinsurer on obligations permitted or required under federal law.

11.6.4 Determination of whether Surety on the Bond or the reinsurer holds a certificate of authority from the United States Secretary of the Treasury is based on information published in Federal Register covering the date on which Bond was executed.

11.6.5 Each Bond given or tendered to the City pursuant to the Contract must be on City forms with no changes made by Contractor or Surety, and must be dated, executed, and accompanied by power of attorney stating that the attorney in fact executing such the bond has requisite authority to execute such Bond. The Bonds must be dated and must be no more than 30 days old.

11.6.6 Surety shall designate in its Bond, power of attorney, or written notice to the City, an agent resident in Harris County to whom any requisite notices may be delivered and on whom service of process may be had in matters arising out of the suretyship.

11.6.7 Contractor shall furnish information to a payment bond beneficiary as required by TEX. GOV'T CODE ANN. CH. 2253.

11.7 *DELIVERY OF BONDS*

11.7.1 Contractor shall deliver required Bonds to the City within time limits stated in Notice of Intent to Award and prior to Date of Commencement of the Work.

ARTICLE 12 - UNCOVERING AND CORRECTION OF THE WORK

12.1 *UNCOVERING OF THE WORK*

12.1.1 If a portion of the Work has been covered which City Engineer has not specifically requested to observe prior to its being covered, City Engineer may request to see such work and it must be uncovered by Contractor. If such work is in accordance with the Contract, the costs of uncovering and covering such work are charged to the City by Change Order. If such work is not in accordance with the Contract, Contractor shall pay for uncovering and shall correct the nonconforming Work promptly after receipt of Notice of Noncompliance to do so.

12.2 *CORRECTION OF THE WORK*

12.2.1 Contractor shall promptly correct or remove work rejected by City Engineer or work failing to conform to requirements of the Contract, whether observed before or after Date of Substantial Completion and whether fabricated, Installed, or completed.

12.2.2 Contractor bears costs of correcting the rejected or nonconforming work including additional testing and inspections, and compensation for Design Consultant's services and expenses made necessary thereby.

12.2.3 If within one year after Date of Substantial Completion, or after date for commencement of warranties established under Paragraph 9.9.5 or by other applicable special warranty required by the Contract, whichever is later in time, any of the Work is found not to be in accordance with the requirements of the Contract, Contractor shall correct such work promptly after receipt of Notice of Noncompliance to do so.

12.2.4 One-year correction period for portions of the Work completed after Date of Substantial Completion will begin on the date of acceptance of that portion of the Work. This obligation under this Paragraph survives acceptance of the Work under the Contract and termination of the Contract.

12.2.5 The one-year correction period does not establish a duration for the Contractor's general warranty under Paragraph 3.12. The City retains the right to recover damages from the Contractor as long as may be permitted by the applicable statute of limitations.

12.2.6 If Contractor does not proceed with correction of the nonconforming work within time fixed by Notice of Noncompliance, the City may correct nonconforming work or remove nonconforming work and store salvageable Products at Contractor's expense. Contractor shall pay the costs of correction of nonconforming work and removal and storage of salvageable Products to the City. If Contractor does not pay costs of the correction or removal and storage within 10 days after written notice, the City may sell the Products at auction or at private sale. The City will account for proceeds thereof after deducting costs and damages that would have been borne by Contractor, including compensation for services of Design Consultant and necessary expenses. If the proceeds of sale do not cover costs which Contractor should have borne, Contractor shall pay the value of the deficiency to the City.

12.2.7 Contractor bears cost of correcting work originally installed by Contractor, the City, or by separate contractors and damaged by Contractor's correction or removal of Contractor's work.

12.3 *ACCEPTANCE OF NONCONFORMING WORK*

12.3.1 If City Engineer prefers to accept work which is not in accordance with requirements of the Contract, City Engineer may do so only by issuance of Change Order, instead of requiring its removal and correction. City Engineer will determine Contract Price reduction. The reduction will become effective even if final payment has been made.

ARTICLE 13 - MISCELLANEOUS PROVISIONS

13.1 *GOVERNING LAWS*

13.1.1 The Contract is subject to the laws of the State of Texas, the City Charter and Ordinances, the laws of the federal government of the United States, and all rules and regulations of any regulatory body or officer having jurisdiction.

13.1.2 Venue for any litigation relating to the Contract is Harris County, Texas.

13.2 *SUCCESSORS*

13.2.1 The Contract binds and benefits the Parties and their legal successors and permitted assigns; however, this Paragraph 13.2.1 does not alter the restrictions on assignment and disposal of assets set out in Paragraph 13.3.1. The Contract does not create any personal liability on the part of any officer or agent of the City.

13.3 *BUSINESS STRUCTURE AND ASSIGNMENTS*

13.3.1 Contractor may not assign the Contract at law or otherwise, or dispose of all or substantially all of its assets without City Engineer's prior written consent. Nothing in this Section, however, prevents the assignment of accounts receivable or the creation of a security interest as described in §9.406 of the Texas Business & Commerce Code. In the case of such an assignment, Contractor shall immediately furnish the City with proof of the assignment and the name, telephone number, and address of the assignee and a clear identification of the fees to be paid to the assignee.

13.3.2 Any series, as defined by the TEX. BUS. ORG. CODE ANN., affiliate, subsidiary, or successor to which Contractor assigns or transfers assets shall join in privity and be jointly and severally liable under this Contract.

13.4 *WRITTEN NOTICE*

13.4.1 All notices required or permitted by the Contract must be in writing and must be effected by hand delivery; registered or certified mail, return receipt requested; or facsimile with confirmation copy mailed to receiving Party. Notice is sufficient if made or addressed with proper postage to the address stated in the Agreement for each Party ("Notice Address") or faxed to the facsimile number stated in the Agreement for each Party. The notice is deemed delivered on the earlier of:

13.4.1.1 the date the Notice is actually received;

13.4.1.2 the third day following deposit in a United States Postal Service post office or receptacle; or

13.4.1.3 the date the facsimile is sent unless the facsimile is sent after 5:00 p.m. local time of the recipient and then it is deemed received on the following day.

Any Party may change its Notice Address or facsimile number at any time by giving written notice of the change to the other Party in the manner provided for in this Paragraph at least 15 days prior to the date the change is affected.

13.5 *RIGHTS AND REMEDIES*

13.5.1 Duties and obligations imposed by the Contract and rights and remedies available thereunder are in addition to and not a limitation of duties, obligations, rights, and remedies otherwise imposed or available by law.

13.5.2 No act or failure to act by the City or Contractor is a waiver of rights or duties afforded them under the Contract, nor is the act or failure to act constitute approval of or acquiescence in a breach of the Contract. No waiver, approval or acquiescence is binding unless in writing and, in the case of the City, signed by City Engineer.

13.6 *TESTS AND INSPECTIONS*

13.6.1 Contractor shall give City Engineer, Construction Manager, and Design Consultant timely notice of the time and place where tests and inspections are to be made. Contractor shall cooperate with inspection and testing personnel to facilitate required inspections or tests.

13.6.2 The City will employ and pay for services of an independent testing laboratory to perform inspections or acceptance tests required by the Contract except:

13.6.2.1 inspections or tests covered by Paragraph 13.6.3;

13.6.2.2 those otherwise specifically provided in the Contract; or

13.6.2.3 costs incurred in connection with tests or inspections conducted pursuant to Paragraph 12.2.2.

13.6.3 Contractor is responsible for and shall pay all costs in connection with inspection or testing required in connection with City Engineer's acceptance of a Product to be incorporated into the Work, or of materials, mix designs, or equipment submitted for approval prior to Contractor's purchase thereof for incorporation into the Work.

13.6.4 Neither observations by the City, Construction Manager, or Design Consultant, nor inspections, tests, or approvals by others, relieves Contractor from Contractor's obligations to perform the Work in accordance with the Contract.

13.7 *INTEREST*

13.7.1 No interest will accrue on late payments by the City except as provided under Chapter 2251 of the Government Code.

13.8 *PARTIES IN INTEREST*

13.8.1 The Contract does not bestow any rights upon any third party, but binds and benefits the Parties only.

13.9 *ENTIRE CONTRACT*

13.9.1 The Contract merges the prior negotiations and understandings of the Parties and embodies the entire agreement of the Parties. No other agreements, assurances, conditions, covenants, express or implied, or other terms of any kind, exist between the Parties regarding the Contract.

13.10 *WRITTEN AMENDMENT*

13.10.1 Changes to the Contract that cannot be effected by Modifications, must be made by written amendment, which will not be effective until approved by City Council.

13.11 *COMPLIANCE WITH LAWS*

13.11.1 Contractor shall comply with the Americans with Disabilities Act of 1990 as amended (ADA) and Texas Architectural Barriers Act and all regulations relating to either statute.

13.11.2 Contractor shall comply with all applicable federal, state, and city laws, rules and regulations.

13.12 *SEVERABILITY*

13.12.1 If any part of the Contract is for any reason found to be unenforceable, all other parts remain enforceable to the extent permitted by law.

ARTICLE 14 - TERMINATION OR SUSPENSION OF THE CONTRACT

14.1 *TERMINATION BY THE CITY FOR CAUSE*

14.1.1 Each of the following acts or omissions of Contractor or occurrences shall constitute an "Event of Default" under the Contract:

14.1.1.1 Contractor refuses or fails to supply enough properly skilled workers or proper Products;

14.1.1.2 Contractor disregards laws, ordinances, rules, regulations, or orders of a public authority having jurisdiction;

14.1.1.3 Contractor is guilty of material breach of any duty or obligation of Contractor under the Contract, including, but not limited to, failure to submit certified payrolls electronically;

14.1.1.4 Contractor has had any other contract with the City terminated for cause at any time subsequent to the effective date of the Contract as set out in the Agreement; or

14.1.1.5 Contractor fails to utilize Ultra Low Sulfur Diesel Fuel, as required in Paragraph 3.9.1.1.

14.1.2 If an Event of Default occurs, City Engineer may, at his option and without prejudice to any other rights or remedies which the City may have, deliver a written notice to Contractor and Surety describing the Event of Default and giving the Contractor 10 days to cure the Event of Default. If after the cure period, Contractor has failed or refused to cure the Event of Default, then City Engineer may deliver a second written notice to Contractor giving notice of the termination of the Contract or of the termination of Contractor's performance under the Contract ("Notice of Termination"). If City Engineer issues a Notice of Termination, then City Engineer may, subject to any prior rights of Surety and any other rights of the City under the Contract or at law:

14.1.2.1 request that Surety complete the Work; or

14.1.2.2 take possession of the site and all materials, equipment, tools, and construction equipment and machinery on the site owned by Contractor; and

14.1.2.3 finish the Work by whatever reasonable method City Engineer may deem expedient.

14.1.3 After Contractor's receipt of a Notice of Termination, and except as otherwise directed in writing by City Engineer, Contractor shall:

14.1.3.1 stop the Work on the date and to the extent specified in the Notice of Termination;

14.1.3.2 place no further orders or subcontracts for Products or services;

14.1.3.3 terminate all orders and subcontracts to the extent that they relate to performance of work terminated;

14.1.3.4 assign to the City, in the manner, at the times, and to the extent directed by City Engineer, all rights, title, and interest of Contractor, under the terminated supply orders and subcontracts. The City may settle or pay claims arising out of termination of the orders and subcontracts;

14.1.3.5 settle all outstanding liabilities and all claims arising out of the termination of

supply orders and subcontracts with approval of City Engineer;

14.1.3.6 take action as may be necessary, or as City Engineer may direct, for protection and preservation of property related to the Work that is in possession of Contractor, and in which the City has or may acquire an interest; and

14.1.3.7 secure the Work in a safe state before leaving the site, providing any necessary safety measures, shoring, or other devices.

14.1.4 If the City terminates the Contract or terminates Contractor's performance under the Contract for any one or more of the reasons stated in Paragraph 14.1.1, Contractor may not receive any further payment until the Work is complete, subject to Paragraph 14.1.5.

14.1.5 If the unpaid balance of Contract Price exceeds the costs of finishing the Work, including liquidated damages and other amounts due under the Contract, the balance will be paid to Contractor. If the costs of finishing the Work exceed the unpaid balance, Contractor shall, within 10 days of receipt of written notice setting out the amount of the excess costs, pay the difference to the City. The amount to be paid to Contractor or the City will be certified by City Engineer in writing, and this obligation for payment shall survive termination of the Contract or termination of Contractor's performance under the Contract. Termination of the Contractor for cause shall not relieve the Surety from its obligation to complete the project.

14.2 *TERMINATION BY THE CITY FOR CONVENIENCE*

14.2.1 City Engineer may, without cause and without prejudice to other rights or remedies of the City, give Contractor and Surety a Notice of Termination with a seven days written notice.

14.2.2 After receipt of the Notice of Termination, and except as otherwise approved by City Engineer, Contractor shall conform to requirements of Paragraph 14.1.3.

14.2.3 After receipt of the Notice of Termination, Contractor shall submit to the City its termination Claim, in forms required by City Engineer. The Claim will be submitted to the City promptly, but no later than six months from the effective date of termination, unless one or more extensions are granted by City Engineer in writing. If Contractor fails to submit its termination Claim within the time allowed, in accordance with Paragraph 14.2.4, City Engineer will determine, on the basis of available information, the amount, if any, due to Contractor because of termination, and City Engineer's determination is final and binding on the Parties. The City will then pay to Contractor the amount so determined.

14.2.4 City Engineer will determine, on the basis of information available to City Engineer, the amount due, if any, to Contractor for the termination as follows:

14.2.4.1 Contract Price for all work performed in accordance with the Contract up to the date of termination determined in the manner prescribed for monthly payments in Article 9, except no retainage is withheld by the City either for payment determined by percentage of completion or for materials and equipment delivered to the site, in storage or in transit.

14.2.4.2 Reasonable termination expenses, including costs for settling and paying Subcontractor and Supplier claims arising out of termination of the Work, reasonable cost of preservation and protection of the City's property after termination, if required, and the cost of Claim preparation. Termination expenses do not include field or central office overhead, salaries of employees of Contractor, or litigation costs, including attorneys' fees.

No amount is allowed for anticipated profit or central office overhead on uncompleted work, or any cost or lost profit for other business of Contractor alleged to be damaged by the termination.

14.2.5 Contractor shall promptly remove from the site any construction equipment, tools, and temporary facilities, except the temporary facilities which City Engineer may wish to purchase and retain.

14.2.6 Contractor shall cooperate with City Engineer during the transition period.

14.2.7 The City will take possession of the Work and materials delivered to the site, in storage, or in transit, as of date or dates specified in the Notice of Termination, and is responsible for maintenance, utilities, security, and insurance, as stated in Notice of Termination.

14.3 *SUSPENSION BY THE CITY FOR CONVENIENCE*

14.3.1 City Engineer may, without cause, after giving Contractor and Surety 24-hour prior written notice, order Contractor to suspend, delay, or interrupt the Work in whole or in part for a period of time as City Engineer may determine.

14.3.2 An adjustment will be made in Contract Time equivalent to the time of suspension.

14.3.3 Adjustment will be made to Contract Price for increases in the cost of performance of the Work, including profit on increased cost of performance caused by suspension, delay, or interruption of the Work in accordance with Paragraph 7.3. No adjustment will be made to the extent that:

14.3.3.1 performance was, or would have been, suspended, delayed, or interrupted by another cause for which Contractor is responsible; or

14.3.3.2 adjustment is made or denied under another provision of the Contract.

14.4 *TERMINATION BY CONTRACTOR*

14.4.1 Contractor may terminate the Contract if the Work is stopped for a period of 30 days through no act or fault of Contractor, directly related to one of these events:

14.4.1.1 issuance of an order of a court or other public authority having jurisdiction;

14.4.1.2 act of government, such as a declaration of national emergency which makes material unavailable; or

14.4.1.3 if repeated suspensions, delays, or interruptions by the City as described in Paragraph 14.3 constitute, in the aggregate, more than 100 percent of the total number of days scheduled for completion, or 120 days in any 365-day period, whichever is less;

No termination will be effective for the above reasons if Contractor delivers written notice to City Engineer describing the reason for termination, giving the proposed termination date, and granting the City a reasonable opportunity to respond and cure any City default before termination is effective.

14.4.2 If the Contract is terminated pursuant to this Paragraph 14.4, Contractor shall comply with the requirements of Paragraphs 14.2.2 through 14.2.7.

END OF DOCUMENT

Document 00800

SUPPLEMENTARY CONDITIONS

ARTICLE 1 - GENERAL PROVISIONS:

1.1 *DEFINITIONS*: *Insert the following Paragraphs 1.1.9.1, 1.1.23, and 1.1.25 reorder the remaining definitions accordingly. Please insert the amended definition of "Specifications".*

1.1.23 *Good Faith Efforts*. Steps taken to achieve an MBE, WBE, SBE, or PDBE goal or other requirements which, by their scope, intensity, and usefulness, demonstrate the bidder's responsiveness to fulfill the business opportunity objective, as well as the Contractor's responsibility to put forth measures to meet or exceed the MBE, WBE, SBE, or PDBE goal (Contract Goal). These steps apply from before a contract's award, through its duration, and after its conclusion, in the event the Contractor has been unsuccessful in meeting the Contract Goal. These efforts are required whether a Goal Oriented Contract or a Regulated Contract, as defined in the Office of Business Opportunity's Policy & Procedures Manual, available at http://www.houstontx.gov/obo.

1.1.25 *Incidental Work.* Work described as incidental shall be work defined in Document 01110 - Summary of Work, that do not have a direct pay item listed in the Document 00410B - Bid Form Part B, or less than 1% of the Contract Price and not capable of being measured. If Work is identified as Incidental Work and also covered by Bid Form Part B quantities, then the unit price item quantities in the Bid Form Part B shall govern.

1.1.45 *Specifications.* Divisions 01 through 16 of the documents that are incorporated into the Agreement, consisting of written General Requirements and requirements for Products, standards, and workmanship for the Work, and performance of related services. All specifications are amended to include, under the Measurement and Payment Section, the following sentence: "Work described as Incidental Work shall not be paid as a separate unit price item."

ARTICLE 3 - THE CONTRACTOR

3.5 *LABOR*: *Insert the following Paragraphs, 3.5.3.1.1, 3.5.3.1.2, and 3.5.3.1.3.*

3.5.3.1.1 If the Original Contract Price is greater than One Million Dollars, Contractor shall make Good Faith Efforts to comply with the City ordinances regarding Minority Business Enterprises (MBE), Women Business Enterprises (WBE), Persons with Disabilities Business Enterprises (PDBE) and Small Business Enterprise (SBE) participation goals which are as follows:

.1 the MBE goal is 8% percent,

.2 the WBE goal is 3% percent, and

.3 the PDBE goal is 0% percent.

.4 The bidder may substitute SBE participation of no more than four percent of the MBE goal, the WBE goal, or portions of the MBE Goal and WBE Goal.

3.5.3.1.2 The MBE, WBE, PDBE, and SBE goals are specific to this Agreement. The Contractor shall make reasonable efforts to achieve these goals.

3.5.3.1.3 Failure by Contractor to comply with the goals for MBE, WBE, SBE, or PDBE is a material breach of the Agreement, which may result in termination of the Agreement, or such other remedy permitted as the City deems appropriate.

ARTICLE 8 - TIME

8.1 *PROGRESS AND COMPLETION: Add the following Paragraph 8.1.6.1.*

8.1.6.1 Contractor shall credit the City by Change Order for inspection services for overtime work or work performed on Sundays or Legal Holidays. The amount Contractor credits the City will be [$50.00 per hour] [*actual costs*] per inspector for inspection services.

ARTICLE 9 - PAYMENTS AND COMPLETION

9.12 *LIQUIDATED DAMAGES: Insert the following Paragraph 9.12.1.1.*

9.12.1.1 The amount of liquidated damages payable by Contractor or Surety for each and every day of delay beyond Contract Time, are $800.00 per day.

ARTICLE 11 - INSURANCE AND BONDS

11.2 *INSURANCE TO BE PROVIDED BY CONTRACTOR: Insert the following Paragraph 11.2.1.2., and Table 2, "Additional Required Coverage".*

11.2.1.2 Contractor shall purchase for the duration of the Contract the insurance set out in Table 2 in addition to the minimum insurance coverage set out in section 11.2.1.

TABLE 2
ADDITIONAL REQUIRED COVERAGE
DEFENSE COSTS EXCLUDED FROM FACE AMOUNT OF POLICY.

(Coverage)	(Limit of Liability)
Property and Casualty Coverage: "All Causes of Loss" Builder's Risk Form for directing physical change to building or plant construction on the Work site and/or all land improvements including all work. (Including but not limited to earthquake, flood, boiler, and machinery including testing, damage to existing or adjoining property, time element coverage, collapse, soft costs (management, architecture, financial costs, pre-opening costs, etc.), transit coverage, off-site storage).	100% of Contract Price, including change orders

END OF DOCUMENT

Document 00805

EQUAL EMPLOYMENT OPPORTUNITY PROGRAM REQUIREMENTS
(City of Houston Information Requirements
for the Successful Bidder on All Construction Contracts)

DOCUMENTS THAT MUST BE SIGNED AND RETURNED TO THE CITY OF HOUSTON PRIOR TO FINAL EXECUTION OF CONTRACT

Certification by Bidder Regarding Equal Employment Opportunity EEO-3

Total Work Force Composition of the Company,..... EEO-6
or in lieu thereof, a copy of the latest Equal Employment Opportunity Commission's EEO-1 form (This information is required only if the Contractor has a work force of 50 or more people and the Contract is $50,000 or more.)

Company's Equal Employment Opportunity Compliance Program EEO-7

INFORMATION THAT MUST BE SUPPLIED DURING THE COURSE OF THE WORK

Certification By Proposed Subcontractor Regarding
Equal Employment Opportunity EEO-26

Certification by Proposed Material Suppliers, Lessors,and
Professional Service Providers Regarding Equal Employment Opportunity..... EEO-29

PLEASE COMPLETE PAGES EEO-3 THROUGH EEO-7 AND MAIL TO:

City of Houston
Mayor's Office of Business Opportunity
Contract Compliance Section
611 Walker, 7th Floor
Houston, Texas 77002
Attention: Director

The remainder of the reports can be mailed at the appropriate time.

EQUAL EMPLOYMENT OPPORTUNITY PROGRAM REQUIREMENTS

The following are Equal Employment Opportunity requirements to be met and documents to be submitted to:

Mayor's Office of Business Opportunity
Contract Compliance Section
611 Walker, 7th Floor
Houston, Texas 77002

Under the conditions and terms of all City construction contracts, the prime contractor is responsible for all Equal Employment Opportunity compliance, including subcontractor compliance.

EQUAL EMPLOYMENT OPPORTUNITY FORMS (EEO Forms)

These forms are submitted by the prime contractors at the beginning of the Project and as requested:

- EEO Forms 3, 6, and 7, by prime contractors

This form is submitted by all subcontractors before they begin work on the project:

- EEO Form 26 by subcontractors

This form is submitted by all suppliers, lessors, or professional services providers before they begin work on the project:

- EEO Form 29

POSTING

The following poster should be clearly displayed on each job site, or in case of annual service agreements, in the Contractor's office:

Equal Employment Opportunity is the Law Poster

JOB SITE VISITS

Site visits will be made by a Contract Compliance Officer, who will make their presence known to the Project Manager, Supervisor, or Foreman, and will conduct interviews with employees on site.

PAYMENT AND EVALUATION

Upon completion of the Project, as part of the contract-awarding department's total clearance process, the Office of Business Opportunity's Contract Compliance Section must certify to the department that all EEO compliance requirements have been met.

CERTIFICATION BY BIDDER REGARDING
EQUAL EMPLOYMENT OPPORTUNITY

GENERAL

In accordance with Executive Order 11246 (30 F.R. 12319-25), the implementing rules and regulations thereof, and orders of the Secretary of Labor, a certification regarding Equal Opportunity is required of bidders or prospective contractors and their proposed subcontractors prior to the award of contracts or subcontracts.

CERTIFICATION OF BIDDER

Bidder's Name:_____

Address:_____

Telephone Number:_____ Fax :_____

Name of the Company's EEO Officer: _____

E-mail Address:_____

Web Page/URL Address:_____

IRS Employer Identification Number:_____

Work to be performed:_____

Project No:_____

1. Participation in a previous contract or subcontract.

   a. Bidder has participated in a previous contract or subcontract subject to the Equal Opportunity Clause. ☐ YES ☐NO

   b. Compliance reports were required to be filed in connection with such contract or subcontract. ☐YES ☐NO

   c. Bidder has filed all compliance reports required by Executive Orders 10925, 11114, 11246, or by regulations of the Equal Employment Opportunity Commission issued pursuant to Title VII of the Civil Rights Act of 1964. ☐ YES ☐NO

   d. If answer of Item c. is "No", please explain in detail on reverse side of this certification.

2. Dollar amount of bid:$ _____

3. Anticipated performance period in days: _____

4. Expected total number of employees to perform the proposed construction: _____

5. Nonsegregated facilities.

   a. Notice to prospective federally-assisted construction contractors

      (1) A Certification of Nonsegregated Facilities, as required by the May 9, 1967, Order (32 F.R. 7439, May 19, 1967) on Elimination of Segregated Facilities, by the Secretary of Labor, must be submitted to the recipient prior to the award of a federally-assisted construction contract exceeding $10,000 which is not exempt from the provisions of the Equal Opportunity Clause.

      (2) Contractors receiving federally-assisted construction contract awards exceeding $10,000 which are not exempt from the provisions of the Equal Opportunity Clause will be required to provide the forwarding of the following notice to prospective subcontractors for supplies and construction contracts where the subcontracts exceed $10,000 and are not exempt from the provisions of the Equal Opportunity Clause.

      The federally-assisted construction Contractor certifies that he/she does not maintain or provide any segregated facilities at any of his/her establishments, and does not permit employees to perform their services at any location, under his/her control, where segregated facilities are maintained. The federally-assisted construction Contractor certifies further that he/she will not maintain or provide segregated facilities at any of his/her establishments, and will not permit employees to perform their services at any location, under his/her control, where segregated facilities are maintained. The federally-assisted construction Contractor agrees that a breach of this certification is a violation of the Equal Opportunity Clause in this Contract. As used in this certification, the term "segregated facilities" means any waiting rooms, work areas, restrooms and washrooms, restaurants and other eating areas, time clocks, locker rooms and other storage or dressing areas, parking lots, drinking fountains, recreation or entertainment areas, transportation, and housing facilities provided for employees which are segregated by explicit directive or are in fact segregated on the basis of race, creed, color, or national origin because of habit, local custom, or otherwise. The federally-assisted construction Contractor agrees that (except where he/she has obtained identical certifications from proposed Subcontractors for specific time periods) he/she will obtain identical certifications in duplicate from proposed Subcontractors prior to the award of subcontracts exceeding $10,000 which are not exempt from the provisions of the Equal Opportunity Clause, and that he/she will retain the duplicate of such certifications in his/her files. The Subcontractor will include the original in his/her bid package.

6. Race or ethnic group designation of bidder. Enter race or ethnic group in appropriate box:

☐ White ☐ Black ☐ Hispanic

☐ Pacific Islander, Asian ☐ American Indian, Aleut.

7. Gender of Owner ☐ Male ☐ Female

REMARKS: _____

Certification - The information above is true and complete to the best of my knowledge and belief.

_____
Company Officer (Please Type)

_____ _____
Signature Date

NOTE: The penalty for making false statements in offers is prescribed in 18 U.S.C. 1001.

Total Work Force Composition of the Company

City of Houston, Affirmative Action Requirements for All Construction Contracts

	White		Black		Hispanic		Pacific Islander/ Asian		Alaska Native/ Amer Ind.		Total Persons		Total Minority		Total Female	
	M	F	M	F	M	F	M	F	M	F	M	F	M	F	M	F
Officials and Administrators																
Professionals																
Paraprofessionals																
Technicians																
Protective Service Workers																
Sales Workers																
Office and Clerical																
Skilled Craft Workers																
Operatives (Semi-skilled)																
Laborers (Unskilled)																
Service / Maintenance Workers																
Others																
Total																

This report includes all of the company's permanent work force. For description of job categories, see Pages CC-27 through CC-29.

Check One: [ ] **Contractor** [ ] **Subcontractor** **DATE:** _____

COMPANY: _____

EQUAL EMPLOYMENT OPPORTUNITY COMPLIANCE PROGRAM FOR

_____

Name of Company

The Company's Office of Business Opportunity Program shall consist of documented good faith efforts to comply with the goals, timetables, and objectives set forth in the following Affirmative Action steps:

A. City of Houston's Specific Equal Employment Opportunity Policy and Clause as contained in City Council Ordinance No. 78-1538, passed August 9, 1978.

B. Notice of Requirement for Office of Business Opportunity to ensure Equal Employment Opportunity (Executive Order 11246).

C. Standard Federal Equal Employment Opportunity Construction Contract Specifications (Executive Order 11246).

Project: _____

_____
Company Officer (Please Type)

_____ _____
Signature Date

NOTE: The penalty for making false statements in offers is prescribed in 18 U.S.C. 1001.

SPECIAL PROVISIONS
SPECIFIC EQUAL EMPLOYMENT OPPORTUNITY POLICY

1. GENERAL

a. Equal employment opportunity requirements not to discriminate and to take affirmative action to assure equal employment opportunity are required by Executive Order 11246, as amended. The requirements set forth in these Special Provisions shall constitute the specific affirmative action requirements for Project activities under this Contract and shall supplement the notice of requirement for affirmative action to ensure equal employment opportunity and standard federal equal employment opportunity construction contract specifications.

b. The Contractor shall work with the City and the Federal Government in carrying out equal employment opportunity obligations and in their review of his/her activities under the Contract.

c. The prime Contractor and all Subcontractors holding subcontracts of $10,000 or more shall comply with the following minimum specific requirement activities of equal employment opportunity. The Contractor shall include these requirements in every subcontract of $10,000 or more with such modification of language as is necessary to make them binding on the Subcontractor.

2. EQUAL EMPLOYMENT OPPORTUNITY POLICY

The Contractor shall accept as his/her operating policy the following statement which is designed to further the provision of equal employment opportunity to all persons without regard to their race, age, color, religion, sex, or national origin, and to promote the full realization of equal employment opportunity through a positive continuing program:

It is the policy of this Company to assure that applicants are employed, and that employees are treated during employment, without regard to their race, religion, color, sex, or national origin. Such action shall include: employment, upgrading, demotion, or transfer; recruitment or recruitment advertising; layoff or termination; rates of pay or other forms of compensation; and selection for training, including apprenticeship.

3. EQUAL EMPLOYMENT OPPORTUNITY OFFICER

The Contractor shall designate and make known to the City contracting officers an equal employment opportunity officer (hereinafter referred to as the EEO Officer) who must be capable of effectively administering and promoting an active Contractor program of equal employment opportunity and who must be assigned adequate authority and responsibilities to do so.

4. DISSEMINATION OF POLICY

a. All members of the Contractor's staff who are authorized to hire, supervise, promote, and discharge employees, or who recommend such action, or who are substantially involved in such action, will be made fully cognizant of, and will implement the Contractor's equal employment opportunity policy and contractual responsibilities to provide equal employment opportunity in each grade and classification of employment. To ensure that the above agreement will be met, the following actions shall be taken as a minimum:

(1) Periodic meetings of supervisory and personnel office employees shall be conducted before the start of work and then not less often than once every six months, at which time the Contractor's equal employment opportunity policy and its implementation will be reviewed and explained. The meetings shall be conducted by the EEO Officer or other knowledgeable company official.

(2) All new supervisory or personnel office employees will be given a thorough indoctrination by the EEO Officer, or other knowledgeable company official, covering all major aspects of the Contractor's equal employment opportunity obligations, within 30 days following their reporting for duty with the Contractor.

(3) The EEO Officer or appropriate company official shall instruct all employees engaged in the direct recruitment of employees for the Project relative to the methods followed by the Contractor in locating and hiring minorities and females.

b. In order to make the Contractor's equal employment opportunity policy known to all employees, prospective employees, and potential sources of employees, i.e., schools, employment agencies, labor unions (where appropriate), college placement officers, etc., the Contractor shall take the following actions:

(1) Notices and posters setting forth the Contractor's equal employment opportunity policy shall be placed in areas readily accessible to employees, applicants for employment, and potential employees.

(2) The Contractor's equal employment opportunity policy and the procedures to implement such policy shall be brought to the attention of employees by means of meetings, employee handbooks, or other appropriate means.

5. RECRUITMENT

a. When advertising for employees, the Contractor shall include in all advertisements for employees the notation "An Equal Opportunity Employer". All such advertisements will be published in newspapers, or

other publications, having a large circulation among minority groups in the area from which the Project work force would normally be derived.

b. The Contractor shall, unless precluded by a valid bargaining agreement, conduct systematic and direct recruitment through public and private employee-referral sources likely to yield qualified minority-group applicants, including, but not limited to, State employment agencies, schools, colleges, minority-group organizations, and female recruitment agencies. To meet this requirement, the Contractor shall, through his/her EEO Officer, identify sources of potential minority and female employees, and establish with such identified sources procedures whereby such group applicants may be referred to the Contractor for employment consideration.

In the event the Contractor has a valid bargaining agreement providing for exclusive hiring hall referrals, he/she is expected to observe the provisions of that agreement to the extent that the system permits the Contractor's compliance with equal employment opportunity Contract provisions. (The U. S. Department of Labor has held that where implementation of such agreements has the effect of discriminating against minorities or women, or obligates the Contractor to do the same, such implementation violates Executive Order 11246 as amended).

c. The Contractor shall encourage his/her present employees to refer female or minority-group applicants for employment by posting appropriate notices or bulletins in areas accessible to all such employees. In addition, information and procedures with regard to referring such applicants will be discussed with employees.

6. PERSONNEL ACTIONS

a. Wage, working conditions, and employee benefits shall be established and administered, and personnel actions of every type, including hiring, upgrading, promotion, transfer, demotion, layoff and termination, shall be taken without regard to race, color, religion, sex, national origin, or age. The following procedures shall be followed:

(1) The Contractor shall conduct periodic inspections of Project sites to ensure that working conditions and employee facilities do not indicate discriminatory treatment of Project-site personnel.

(2) The Contractor shall periodically evaluate the spread of wages paid within each classification to determine any evidence of discriminatory wage practices.

(3) The Contractor shall periodically review selected personnel actions in depth to determine whether there is evidence of discrimination. Where evidence is found, the Contractor shall promptly take corrective action. If the review indicates that the discrimination may extend beyond the actions reviewed, such corrective action shall include all affected persons.

(4) The Contractor shall promptly investigate all complaints of alleged discrimination made in connection with his/her obligations under this Contract, shall attempt to resolve such complaints, and shall take appropriate corrective action. If the investigation indicates that the discrimination may affect persons other than the complainant, such corrective action shall include such other persons. Upon completion of each investigation, the Contractor shall inform every complainant of all avenues of appeal.

7. TRAINING AND PROMOTION

a. The Contractor shall assist in locating, qualifying, and increasing the skills of minority-group and women employees and applicants for employment.

b. Consistent with the Contractor's work force requirements and as permissible under Federal and State regulations, the Contractor shall make full use of training programs, i.e., apprenticeship and on-the-job training programs, for the geographical area of Contract performance.

c. The Contractor shall advise employees and applicants for employment of available training programs and entrance requirements for each.

d. The Contractor shall periodically review the training and promotion potential of minority-group and women employees and shall encourage eligible employees to apply for such training and promotion.

8. UNIONS

If the Contractor relies in whole or in part upon unions as a source of employees, he/she shall use his/her best efforts to obtain the cooperation of such unions to increase minority groups and women within the unions, and to effect referrals by such unions of minority and female employees. Actions by the Contractor, either directly or through a contractor's association acting as his/her agent, will include the procedures set forth below:

a. The Contractor shall use best efforts to develop, in cooperation with the unions, joint training programs aimed toward qualifying more minority-group members and women for membership in the unions and increasing the skills of minority-group employees and women so that they may qualify for higher-paying employment.

b. The Contractor shall use best efforts to incorporate an equal employment opportunity clause into all union agreements to the end that such unions will be contractually bound to refer applicants without regard to their race, color, religion, sex, national origin, or age.

c. The Contractor is to obtain information as to the referral practices and policies of the labor union, except that to the extent such information is within the exclusive possession of the labor union, and such labor union refuses to furnish such information to the Contractor, the Contractor shall so certify to the City and shall set forth what efforts have been made to obtain such information.

d. In the event the union is unable to provide the Contractor with a reasonable flow of minority and women referrals within the time limit set forth in the collective bargaining agreement, the Contractor shall, through independent recruitment efforts, fill the employment vacancies without regard to race, color, religion, age, sex, or national origin, making full efforts to obtain qualified and/or qualifiable minority group persons and women. (The U. S. Department of Labor has held that it shall be no excuse that the union with which the Contractor has a collective bargaining agreement providing for exclusive referral failed to refer minority employees.) In the event the union referral practice prevents the Contractor from meeting the obligations pursuant to Executive Order 11246, as amended, and these special provisions, such Contractor shall immediately notify the City.

9. SUBCONTRACTING

a. The Contractor shall use his/her best efforts to solicit bids from and to utilize minority-group and female subcontractors or subcontractors with meaningful minority-group and/or female representation among their employees.

b. The Contractor shall use his/her best efforts to assure Subcontractors' compliance with their equal employment opportunity obligations.

10. RECORDS AND REPORTS

a. The Contractor shall keep such records as are necessary to determine compliance with the Contractor's equal employment opportunity obligations. The records kept by the Contractor will be designed to indicate:

(1) The number of minority and non-minority group members and women employed in each work classification on the Project.

(2) The progress and efforts being made in cooperation with unions to increase employment opportunities for minorities and women (applicable only to contractors who rely in whole or in part on unions as a source of their work force).

(3) The progress and efforts being made in locating, hiring, training, qualifying, and upgrading minority and female employees.

(4) The progress and efforts being made in securing the services of female and minority subcontractors.

b. All records, including payrolls, must be retained for a period of three years following completion of the Contract work and shall be available at reasonable times and places for inspection by authorized representatives of the City and/or the appropriate federal agency.

CITY OF HOUSTON, TEXAS

EQUAL EMPLOYMENT OPPORTUNITY CLAUSE

Pursuant to City Council Ordinance No. 78-1538, passed August 9, 1978, all contracts entered into by the City of Houston involving the expenditure of $10,000 or more, shall incorporate the following Equal Employment Opportunity Clause:

1. The Contractor, Subcontractor, vendor, Supplier, or lessee shall not discriminate against any employee or applicant for employment because of race, religion, color, sex, national origin, or age. The Contractor, Subcontractor, vendor, Supplier, or lessee shall take affirmative action to ensure that applicants are employed and that employees are treated during employment without regard to their race, religion, color, sex, national origin, or age. Such action will include, but not be limited to, the following: employment; upgrading; demotion or transfer; recruitment advertising; layoff or termination; rates of pay or other forms of compensation; and selection for training, including apprenticeship. The Contractor, Subcontractor, vendor, Supplier, or lessee agrees to post in conspicuous places available to employees, and applicants for employment, notices to be provided by the City setting forth the provisions of this Equal Employment Opportunity Clause.

2. The Contractor, Subcontractor, vendor, Supplier, or lessee states that all qualified applicants will receive consideration for employment without regard to race, religion, color, sex, national origin, or age.

3. The Contractor, Subcontractor, vendor, Supplier, or lessee shall send to each labor union or representatives of workers with which it has a collective bargaining agreement or other contract or understanding, a notice to be provided by the agency contracting officer advising the said labor union or workers' representative of the Contractor's and Subcontractor's commitments under Section 202 of Executive Order No. 11246, and shall post copies of the notice in conspicuous places available to employees and applicants for employment.

4. The Contractor, Subcontractor, vendor, Supplier, or lessee will comply with all provisions of Executive Order No. 11246 and the rules, regulations, and relevant orders of the Secretary of Labor or other Federal Agency responsible for enforcement of the equal opportunity and affirmative action provisions applicable, and shall likewise furnish all information and reports required by the Mayor and/or Contractor Compliance Officers for purposes of investigation to ascertain and effect compliance with this program.

5. The Contractor, Subcontractor, vendor, Supplier, or lessee shall furnish all information and reports required by Executive Order No. 11246, and by the rules, regulations, and orders of the Secretary of Labor, or pursuant thereto, and shall permit access to all books, records, and accounts by the appropriate City and Federal officials for purposes of investigation to ascertain compliance with such rules, regulations, and orders. Compliance reports filed at such times as directed shall contain information as to the employment practice policies, program, and work force statistics of the Contractor, Subcontractor, vendor, Supplier, or lessee.

6. In the event of a Contractor's, Subcontractor's, vendor's, Supplier's, or lessee's non-compliance with the non-discrimination clause of this Contract or with any of such rules, regulations, or orders, this Contract may be canceled, terminated, or suspended in whole or in part, and the Contractor, Subcontractor, vendor, Supplier, or lessee may be declared ineligible for further City contracts in accordance with procedures provided in Executive Order No. 11246, and such other sanctions may be imposed and remedies invoked as provided in said Executive Order, or by rule, regulation, or order of the Secretary of Labor, or as may otherwise be provided by law.

7. The Contractor shall include the provisions of paragraphs 1 through 8 of this Equal Employment Opportunity Clause in every subcontract or purchase order unless exempted by rules, regulations, or orders of the Secretary of Labor issued pursuant to Section 204 of Executive Order No. 11246 of September 24, 1965 so that such provisions will be binding upon each Subcontractor or vendor. The Contractor shall take such action with respect to any subcontractor or purchase order as the contracting agency may direct as a means of enforcing such provisions, including sanctions for noncompliance; provided, however, that in the event the Contractor becomes involved in, or is threatened with litigation with a Subcontractor or vendor as a result of such direction by the contracting agency, the Contractor may request the United States to enter into such litigation to protect the interests of the United States.

8. The Contractor shall file and shall cause each of his Subcontractors, if any, to file compliance reports with the City in the form and to the extent as may be prescribed by the Mayor's Office of Business Opportunity. Compliance reports filed at such times as directed shall contain information as to the practices, policies, programs, employment policies, and employment statistics of the Contractor and each Subcontractor.

NOTICE OF REQUIREMENT FOR AFFIRMATIVE ACTION
TO ENSURE EQUAL EMPLOYMENT OPPORTUNITY
(EXECUTIVE ORDER 11246)

1. The Offeror's or Bidder's attention is called to the "Equal Opportunity Clause" and the "Standard Federal Equal Employment Opportunity Construction Contract Specifications" set forth herein.

2. The goals and timetables for minority and female participation, expressed in percentage terms for the Contractor's aggregate work force in each trade on all construction work in the covered area, are as follows:

Timetable	Goals for Minority Participation for Each Trade	Goals for Female Participation for Each Trade
	26.2% - 27.3%	6.9%

These goals are applicable to all the Contractor's construction work (whether or not it is Federal or Federally-assisted) performed in the covered area.

The Contractor's compliance with the Executive Order and the regulations in 41 CFR Part 60-4 shall be based on its implementation of the Equal Opportunity Clause, specific affirmative action obligations required by the specifications set forth in 41 CFR 60-4.3(a), and its efforts to meet the goals established for the geographical area where the Contract resulting from this solicitation is to be performed. The hours of minority and female employment and training must be substantially uniform throughout the length of the Contract, and in each trade, and the Contractor shall make a good faith effort to employ minorities and women evenly on each of its projects. The transfer of minority or female employees or trainees from Contractor to Contractor or from project to project for the sole purpose of meeting the Contractor's goals shall be a violation of the Contract, the Executive Order, and regulations in 41 CFR part 60-4. Compliance with the goals will be measured against the total work hours performed.

3. The Contractor shall provide written notification to the Director of the Office of Federal Contract Compliance Programs within 10 working days of award of any construction subcontract in excess of $10,000 at any tier for construction work under the Contract resulting from this solicitation. The notification shall list the name, address, and telephone number of the Subcontractor; employer identification number; estimated dollar amount of the subcontract; estimated starting and completion dates of the subcontract; and the geographical area in which the Contract is to be performed.

4. As used in this Notice, and in the Contract resulting from this solicitation, the "covered area" is The Houston, Texas Standard Metropolitan Statistical Area.

STANDARD FEDERAL EQUAL EMPLOYMENT OPPORTUNITY
CONSTRUCTION CONTRACT SPECIFICATIONS
(EXECUTIVE ORDER 11246)

1. As used in these specifications:

   a. "Covered area" means the geographical area described in the solicitation from which this Contract resulted;

   b. "Director" means Director, Office of Federal Contract Compliance Programs, United States Department of Labor, or any person to whom the Director delegates authority;

   c. "Employer identification number" means the Federal Social Security number used on the Employer's Quarterly Federal Tax Return, U. S. Treasury Department Form 941.

   d. "Minority" includes:

      (i) Black (all persons having origins in any of the Black African racial groups not of Hispanic origin);

      (ii) Hispanic (all persons of Mexican, Puerto Rican, Cuban, Central or South American, or other Spanish culture or origin regardless of race);

      (iii) Asian and Pacific Islander (all persons having origins in any of the original peoples of the Far East, Southeast Asia, the Indian Subcontinent, or the Pacific Islands); and

      (iv) American Indian or Alaskan Native (all persons having origins in any of the original peoples of North America and maintaining identifiable tribal affiliations through membership and participation or community identification).

2. Whenever the Contractor, or any Subcontractor at any tier, subcontracts a portion of the work involving any construction trade, it shall physically include in each subcontract in excess of $10,000 the provisions of these specifications and the Notice which contains the applicable goals for minority and female participation and which is set forth in the solicitations from which this Contract resulted.

3. If the Contractor is participating (pursuant to 41 CFR 60-4.5) in a Hometown Plan approved by the U. S. Department of Labor in the covered area either individually or through an association, its affirmative action obligations on all work in the Plan area (including goals and timetables) shall be in accordance with that Plan for

those trades which have unions participating in the Plan. Contractors must be able to demonstrate their participation in and compliance with the provisions of any such Hometown Plan. Each Contractor or Subcontractor participating in an approved Plan is individually required to comply with its obligations under the EEO clause, and to make a good faith effort to achieve each goal under the Plan in each trade in which it has employees. The overall good faith performance by other Contractors or Subcontractors toward a goal in an approved Plan does not excuse any covered Contractor's or Subcontractor's failure to take good efforts to achieve the Plan goals and timetables.

4. The Contractor shall implement the specific affirmative action standards provided in Paragraphs 7a through p of these specifications. The goals set forth in the solicitation from which this Contract resulted are expressed as percentages of the total hours of employment and training of minority and female utilization the Contractor should reasonably be able to achieve in each construction trade in which it has employees in the covered area. The Contractor is expected to make substantially uniform progress toward its goals in each craft during the period specified.

5. Neither the provisions of any collective bargaining agreement, nor the failure by a union with whom the Contractor has a collective bargaining agreement to refer either minorities or women, shall excuse the Contractor's obligations under these specifications, Executive Order 11246, or the regulations promulgated pursuant thereto.

6. In order for the non-working training hours of apprentices and trainees to be counted in meeting the goals, such apprentices and trainees must be employed by the Contractor during the training period, and the Contractor must have made a commitment to employ the apprentices and trainees at the completion of their training, subject to the availability of employment opportunities. Trainees must be trained pursuant to training programs approved by the U. S. Department of Labor.

7. The Contractor shall take specific affirmative actions to ensure equal employment opportunity. The evaluation of the Contractor's compliance with these specifications shall be based upon its effort to achieve maximum results from its actions. The Contractor shall document these efforts fully, and shall implement affirmative action steps at least as extensive as the following:

    a. Ensure and maintain a working environment free of harassment, intimidation, and coercion at all sites, and in all facilities at which Contractor's employees are assigned to work. The Contractor, where possible, shall assign two or more women to each construction project. The Contractor shall specifically ensure that all foremen, superintendents, and other on-site supervisory personnel are aware of and carry out the Contractor's obligation to maintain such a working environment, with specific attention to minority or female individuals working at such sites or in such facilities.

b. Establish and maintain a current list of minority and female recruitment sources; provide written notification to minority and female recruitment sources and to community organizations when the Contractor or its unions have employment opportunities available, and maintain a record of the organizations' responses.

c. Maintain a current file of the names, addresses, and telephone numbers of each minority and female off-the-street applicant and minority or female referral from a union, a recruitment source, or community organization and of what action was taken with respect to each such individual. If such individual was sent to the union hiring hall for referral and was not referred back to the Contractor by the union or, if referred, not employed by the Contractor, this shall be documented in the file with the reason therefor, along with whatever additional actions the Contractor may have taken.

d. Provide immediate written notification to the Director when the union or unions with which the Contractor has a collective bargaining agreement has not referred to the Contractor a minority person or woman sent by the Contractor, or when the Contractor has other information that the union referral process has impeded the Contractor's efforts to meet its obligations.

e. Develop on-the-job training opportunities and/or participate in training programs for the area which expressly include minorities and women, including upgrading programs and apprenticeship and trainee programs relevant to the Contractor's employment needs, especially those programs funded or approved by the Department of Labor. The Contractor shall provide notice of these programs to the sources compiled under 7b above.

f. Disseminate the Contractor's EEO policy by providing notice of the policy to unions and training programs and requesting their cooperation in assisting the Contractor in meeting its EEO obligations by including it in any policy manual and collective bargaining agreement; by publicizing it in the company newspaper, annual report, etc.; by specific review of the policy with all management personnel and with all minority and female employees at least once a year; and by posting the company EEO policy on bulletin boards accessible to all employees at each location where construction work is performed.

g. Review, at least annually, the company's EEO policy and affirmative action obligations under these specifications with all employees having any responsibility for hiring, assignment, layoff, termination, or other employment decisions, including specific review of these items with on-site supervisory personnel such as superintendents, general foremen, etc., prior to the initiation of construction work at any job site. A written record shall be made and maintained identifying the time and place of

these meetings, persons attending, subject matter discussed, and disposition of the subject matter.

h. Disseminate the Contractor's EEO policy externally by including it in any advertising in the news media, specifically including minority and female news media, and providing written notification to and discussing the Contractor's EEO policy with other contractors and subcontractors with whom the Contractor does or anticipates doing business.

i. Direct its recruitment efforts, both oral and written, to minority, female and community organizations, to schools with minority and female students, and to minority and female recruitment and training organizations serving the Contractor's recruitment area and employment needs. Not later than one month prior to the date for the acceptance of applications for apprenticeship or other training by any recruitment source, the Contractor shall send written notification to organizations such as the above, describing the openings, screening procedures, and tests to be used in the selection process.

j. Encourage present minority and female employees to recruit other minority persons and women and, where reasonable, provide after school, summer, and vacation employment to minority and female youth both on the site and in other areas of a Contractor's work force.

k. Validate all tests and other selection requirements where there is an obligation to do so under 41 CFR Part 60-3.

l. Conduct, at least annually, an inventory and evaluation at least of all minority and female personnel for promotional opportunities and encourage these employees to seek or to prepare, through appropriate training, etc., for such opportunities.

m. Ensure that seniority practices, job classifications, work assignments, and other personnel practices do not have a discriminatory effect by continually monitoring all personnel and employment-related activities to ensure that the EEO policy and the Contractor's obligations under these specifications are being carried out.

n. Ensure that all facilities and company activities are nonsegregated except that separate or single-user toilet and necessary changing facilities shall be provided to assure privacy between the sexes.

o. Document and maintain a record of all solicitations of offers for subcontracts from minority and female construction contractors and suppliers, including circulation of solicitations to minority and female contractor associations and other business associations.

p. Conduct a review, at least annually, of all supervisors' adherence to and performance under the Contractor's EEO policies and affirmative action obligations.

8. Contractors are encouraged to participate in voluntary associations which assist in fulfilling one or more of their affirmative action obligations (7a through p). The efforts of a contractor association, joint contractor union, contractor-community, or other similar group of which the Contractor is a member and participant, may be asserted as fulfilling any one or more of its obligations under 7a through p of these Specifications provided that the Contractor actively participates in the group, makes every effort to assure that the group has a positive impact on the employment of minorities and women in the industry, ensures that the concrete benefits of the program are reflected in the Contractor's minority and female work force participation, makes a good faith effort to meet its individual goals and timetables, and can provide access to documentation which demonstrates the effectiveness of actions taken on behalf of the Contractor. The obligation to comply, however, is the Contractor's and failure of such a group to fulfill an obligation shall not be a defense for the Contractor's noncompliance.

9. A single goal for minorities and a separate single goal for women have been established. The Contractor, however, is required to provide equal employment opportunity and to take affirmative action for all minority groups, both male and female, and all women, both minority and non-minority. Consequently, the Contractor may be in violation of the Executive Order if a particular group is employed in a substantially disparate manner (for example, even though the Contractor has achieved its goals for women generally, the Contractor may be in violation of the Executive Order if a specific minority group of women is under utilized).

10. The Contractor shall not use the goals and timetables or affirmative action standards to discriminate against any person because of race, color, religion, sex, or national origin.

11. The Contractor shall not enter into any subcontract with any person or firm debarred from Government contracts pursuant to Executive Order 11246.

12. The Contractor shall carry out such sanctions and penalties for violation of these specifications and of the Equal Opportunity Clause, including suspension, termination, and cancellation of existing subcontracts as may be imposed or ordered pursuant to Executive Order 11246, as amended, and its implementing regulations, by the Office of Federal Contract Compliance Programs. Any Contractor who fails to carry out such sanctions and penalties shall be in violation of these specifications and Executive Order 11246, as amended.

13. The Contractor, in fulfilling its obligations under these specifications, shall implement specific affirmative action steps, at least as extensive as those standards prescribed in Paragraph 7 of these specifications, so as to achieve maximum results from its efforts to ensure equal employment opportunity. If the

Contractor fails to comply with the requirements of the Executive Order, the implementing regulations, or these specifications, the Director shall proceed in accordance with 41 CFR 60-4.B.

14. The Contractor shall designate a responsible official to monitor all employment-related activity to ensure that the company EEO policy is being carried out, to submit reports relating to the provisions hereof as may be required by the Government, and to keep records. Records shall at least include for each employee the name, address, telephone number, construction trade, union affiliation, if any, employee identification number when assigned, social security number, race, sex, status (e.g., mechanic, apprentice, trainee, helper, or laborer), dates of changes in status, hours worked per week in the indicated trade, rate of pay, and locations at which the work was performed. Records shall be maintained in an easily-understandable and retrievable form; however to the degree that existing records satisfy this requirement, contractors shall not be required to maintain separate records.

15. Nothing herein provided shall be construed as a limitation upon the application of other laws which establish different standards of compliance or upon the application of requirements for the hiring of local or other area residents (e.g., those under the Public Works Employment Act of 1977 and the Community Development Block Grant Program).

DESCRIPTION OF JOB CATEGORIES

Officials, Managers, and Administrators

Occupations requiring administrative personnel who set board policies, exercise overall responsibility for the execution of these policies, or provide specialized consultation on a regional, district, area basis, or direct individual departments or special phases of a firm's operations.

Includes: Officials, executives, middle management, plant managers, department managers, superintendents, salaried foremen who are members of management, purchasing agents, buyers, bureau chiefs, directors, deputy directors, wardens, examiners, sheriffs, police and fire chiefs, and kindred workers.

Professionals

Occupations which require specialized and theoretical knowledge which is usually acquired through college or experience of such kind and amount as to provide a comparable background.

Includes: Accountants, auditors, airplane pilots and navigators, architects, artists, chemists, designers, dieticians, editors, engineers, lawyers, librarians, mathematicians, natural scientists, registered professional nurses, personnel and labor relations workers, physical scientists, teachers, social workers, doctors, psychologists, economists, systems analysts, employment and vocational rehabilitation counselors, instructors, police and fire captains and lieutenants, and kindred workers.

Paraprofessionals

Occupations in which workers perform some of the duties of a professional or technician in a supportive role, which usually requires less formal training and/or experience normally required for professional or technical status. Such positions may fall within an identified pattern of a "New Careers" concept.

Includes: Library assistants, medical aides, child support workers, police auxiliary, welfare service aides, recreation assistants, homemakers aides, home health aides, and kindred workers.

Technicians

Occupations requiring a combination of basic scientific knowledge and manual skill which can be obtained through about two (2) years of post high school education, such as is offered in many technical institutes and junior colleges, or through equivalent on-the-job training.

Includes: Computer programmers and operators, draftsmen, engineering aides, junior engineers, mathematical aides, licensed practical or vocational nurses, photographers, radio operators, scientific assistants, surveyors, technical illustrators, technicians (medical, dental, electronics, physical sciences), police and fire sergeants, and kindred workers.

Protective Service Workers

Occupations in which workers are entrusted with public safety, security, and protection from destructive forces.

Includes: Police patrol officers, fire fighters, guards, deputy sheriffs, bailiffs, correctional officers, detectives, marshals, harbor patrol officers, and kindred workers.

Sales Workers

Occupations engaging wholly or primarily in direct selling.

Includes: Advertising agents and salespersons, insurance agents and brokers, real estate agents and brokers, stock and bond salespersons, demonstrators, salespersons and sales clerks, grocery clerks, cashiers, and kindred workers.

Office and Clerical

Occupations in which workers are responsible for internal and external communications, recording and retrieval of data and/or information and other paper work required in an office predominantly non-manual, though some manual work not directly involved with altering or transporting the products is included.

Includes: Bookkeepers, cashiers, collectors (bills and accounts), messengers and office helpers, office machine operators, shipping and receiving clerks, stenographers, typists and secretaries, telegraph and telephone operators, court transcribers, hearing reporters, statistical clerks, dispatchers, license distributors, payroll clerks, and kindred workers.

Skilled Craft Workers

Occupations in which workers perform jobs which require special manual skill through on-the-job training and experience, or through apprenticeship or other formal training programs. These workers exercise considerable independent judgment and usually receive an extensive period of training.

Includes: The building trades, hourly paid foremen and leadmen who are not members of management, mechanics and repairmen, skilled machining occupations, compositors and typesetters, electricians, engravers, job setters

(metal), motion picture projectionists, pattern and model makers, stationary engineers, tailors, heavy equipment operators, carpenters, and kindred workers.

Operatives (semi-skilled)

Workers who operate machine or processing equipment or perform other factory-type duties of intermediate skill level which can be mastered in a few weeks and require only limited training.

Includes: Apprentices (auto mechanics), plumbers, bricklayers, carpenters, electricians, mechanics, building trades, metal workers, machinists, printing trades, operatives, attendants (auto service and parking), blasters, chauffeurs, deliverymen, dressmakers and seamstresses (except factory), dryers, furnacemen, heaters (metal), laundry and dry cleaning operatives, milliners, miners, motormen, oilers, greasers, etc. (except auto), painters (except construction and maintenance), photographic process workers, stationary firemen, truck and tractor drivers, weavers (textile), welders and flame cutters, and kindred workers.

Laborers (unskilled)

Workers in manual occupations which generally require no special training. These workers perform elementary duties that may be learned in a few days and require the application of little or no independent judgment.

Includes: Garage workers, car washers and greasers, gardeners (except farm) and groundskeepers, longshoremen and stevedores, lumbermen, craftsmen, and wood choppers, laborers performing lifting, digging, mixing, loading, and pulling operations, and kindred workers.

Service/Maintenance Workers

Occupations in which workers perform duties which result in or contribute to the comfort, convenience, hygiene or safety for the general public or which contribute to the upkeep and care of buildings, facilities or grounds, or public property. Workers in this group may operate machinery.

Includes: Chauffeurs, laundry and dry cleaning operatives, truck drivers, trash collectors, custodial personnel, gardeners and groundskeepers, construction laborers, attendants (hospital and other institutions), professional and personal service, counter and fountain workers, elevator operators, firemen and fire protection, guards, watchmen and doorkeepers, stewards, porters, waiters, and kindred workers.

CERTIFICATION BY PROPOSED SUBCONTRACTOR REGARDING EQUAL EMPLOYMENT OPPORTUNITY

_____
Name of Prime Contractor

_____
Address

GENERAL

In accordance with Executive Order 11246 (30 F.R. 12319-25), the implementing rules and regulations thereof, and orders of the Secretary of Labor, a certification regarding Equal Opportunity is required of bidders or prospective contractors and their proposed subcontractors prior to the award of contracts or subcontracts.

SUBCONTRACTOR'S CERTIFICATION

Subcontractor's Name: _____

Address: _____

IRS Employer Identification Number: _____

Job Description : _____

1. Participation in a previous contract or subcontract.

   a. Subcontractor has participated in a previous contract or subcontract subject to the Equal Opportunity Clause. ____YES ____NO

   b. Compliance reports were required to be filed in connection with such contract or subcontract. ____YES ____NO

   c. Subcontractor has filed all compliance reports required by Executive Orders 10925, 11114, 11246, or by regulations of the Equal Employment Opportunity Commission issued pursuant to Title VII of the Civil Rights Act of 1964. ____YES ____NO

   d. If answer of Item c. is "No", please explain in detail on reverse side of this certification.

2. Dollar amount of proposed subcontract: $ _____

3. Anticipated performance period in days: _____

4. Expected total number of employees to perform the proposed subcontract: _____

5. Nonsegregated facilities.

   a. Notice to prospective federally-assisted construction contractors
      (1) A Certification of Nonsegregated Facilities, as required by the May 9, 1967, order (32 F.R. 7439, May 19, 1967) on Elimination of Segregated Facilities, by the Secretary of Labor, must be submitted to the Contractor prior to the award of a subcontract exceeding $10,000 which is not exempt from the provisions of the Equal Opportunity Clause.
      (2) Contractors receiving subcontract awards exceeding $10,000 which are not exempt from the provisions of the Equal Opportunity Clause will be required to provide for the forwarding of this notice to prospective subcontractors for supplies and construction contracts where the subcontracts exceed $10,000 and are not exempt from the provisions of the Equal Opportunity clause.

   b. Certification of non-segregated facilities

      The federally-assisted construction contractor certified that he/she does not maintain or provide any segregated facilities at any of his/her establishments, and does not permit employees to perform their services at any location, under his/her control, where segregated facilities are maintained. The federally-assisted construction Contractor certifies further that he/she will not maintain or provide any segregated facilities at any of his/her establishments, and will not permit employees to perform their services at any location, under his/her control, where segregated facilities are maintained. The federally-assisted construction Contractor agrees that a breach of this certification is a violation of the Equal Opportunity Clause in this Contract. As used in this certification, the term "segregated facilities" means any waiting rooms, work areas, restrooms and washrooms, restaurants, and other eating areas, time clocks, locker rooms and other storage or dressing areas, parking lots, drinking fountains, recreation or entertainment areas, transportation, and housing facilities provided for employees which are segregated by explicit directive or are in fact segregated on the basis of race, creed, color, or national origin because of habit, local custom, or otherwise. The federally-assisted construction Contractor agrees that (except where he/she has obtained identical certifications from proposed Subcontractors for specific time periods) he/she will obtain identical certifications in duplicate from proposed Subcontractors prior to the award of subcontracts exceeding $10,000 which are not exempt from the provisions of the Equal Opportunity Clause, and that he/she will retain the duplicate of such certifications in his/her files. The Contractor will include the original in his/her Bid Package.

6. Race or ethnic group designation of bidder. Enter race or ethnic group in appropriate box:

☐ White ☐ Black ☐ Hispanic

☐ Pacific Islander, Asian ☐ American Indian, Aleut.

7. Gender

☐ Male ☐ Female

REMARKS: _

Certification - The information above is true and complete to the best of my knowledge and belief.

_____

Company Officer (Please Type)

_____ _____

Signature Date

NOTE: The penalty for making false statements in offers is prescribed in 18 U.S.C. 1001.

Certification by Proposed Material Suppliers, Lessors, and Professional Service Providers Regarding Equal Employment Opportunity

Company Name: _____ $_____
(Supplier, Lessor, Professional Service Provider) (Amount of Contract)

Company Address: _____

Company Telephone Number: _____ Fax: _____

E-mail Address: _____

Web Page/URL Address: _____

Company Tax Identification Number: _____

Project No.: [*WBS/CIP/AIP/File No.*] _____

Project Name: [*Legal Project Name*] _____

In accordance with the City of Houston Ordinance 78-1538, Supplier/Lessor/Professional Service Provider represents to be an equal opportunity employer and agrees to abide by the terms of the Ordinance. This certification is required of all Suppliers/Lessors/Professional Service Providers (herein Supplier) with contracts in the amount of $10,000.00 or more.

[ ] Yes [ ] No Supplier agrees not to discriminate against any employee or applicant for employment because of race, religion, color, sex, national origin, or age.

[ ] Yes [ ] No Supplier agrees that all qualified applicants will receive consideration for employment without regard to race, religion, color, sex, national origin, or age.

[ ] Yes [ ] No Supplier will comply with all provisions of Executive Order No. 11246 and rules, regulations and applicable orders of the Department of Labor or other Federal Agency responsible for enforcement of applicable equal opportunity and affirmative action provisions and will likewise furnish all information and reports required by the Mayor or Contract Compliance Officers for the purpose of investigation to ascertain and effect compliance with the City of Houston's Office of Affirmative Action and Contract Compliance.

[ ] Yes [ ] No The Supplier shall file and cause their sub-tier contractors to file compliance reports with the City in the form and to the extent as may be prescribed by the Mayor or Contract Compliance Officers. Compliance reports filed at such times as directed shall contain information including, but not limited to, the practices, policies, programs, and employment policies.

I hereby certify that the above information is true and correct.

_____ _____
COMPANY OFFICER (Signature) DATE

_____
NAME AND TITLE (Print or type)

END OF DOCUMENT

Document 00808

REQUIREMENTS FOR THE CITY OF HOUSTON PROGRAM FOR MINORITY, WOMEN, AND SMALL BUSINESS ENTERPRISES (MWSBE) AND PERSONS WITH DISABILITIES ENTERPRISES (PDBE)

CONSTRUCTION CONTRACTS

I. GENERAL

A. CITY AUTHORITIES

1. The "OBO Director" is the City of Houston's Office of Business Opportunity Director, or his or her designee.

City of Houston
611 Walker Street, 7th Floor
Houston, Texas 77002

2. The "Contracting Department" for this Project is the City of Houston Department specified in Document 00520 – Agreement.

3. The "Project Manager" for this Project is specified in Document 00550, Contract Approval Notification.

II. REOCCURRING REPORTS THAT MUST BE SUBMITTED DURING THE COURSE OF THE CONTRACT:

A. MWSBE MONTHLY REPORT PROCESS

The Contractor shall complete the MWSBE Monthly Utilization Report in the Contract Compliance and Monitoring System (available at https://houston.mwdbe.com/).

B. The Contractor shall comply with further, applicable instructions regarding reporting and compliance as provided in Sections III.E and III.I below.

III. BUSINESS ENTERPRISE PROGRAM REQUIREMENTS:

A. PURPOSE

This Document facilitates implementation of City of Houston, Tex. Code of Ordinances Chapter 15, Article V, § 15-81 *et seq.,* relating to MWSBE contract participation, and Code of Ordinances Chapter 15, Article VI, § 15-90 *et seq.,* relating to PDBE contract participation (collectively, the "Business Enterprise Program or "MWSBE"). City of Houston, Tex. Ordinance 2013-0428, May 8, 2013.

B. POLICY

It is the policy of the City to encourage the full participation of Minority and Women-owned Business Enterprises, Small Business Enterprises, and Persons with Disabilities Business Enterprises in all phases of its procurement activities and to afford them a full and fair opportunity to compete for City contracts at all levels.

C. POLICY ELEMENTS

1. The Contractor agrees to ensure that MWSBE firms have a full and fair opportunity to participate in the performance of City contracts. In this regard the Contractor shall make all reasonable Good Faith Efforts to meet the Contract Goals for this Contract.

2. The Contractor and any Subcontractor shall not discriminate on the basis of race, color, religion, national origin, or sex in the performance of City contracts.

3. Contractor's performance in meeting the Participation Plan Percentage will be monitored during the construction phase of the Contract by the Office of Business Opportunity ("OBO") and the Contracting Department (the "Department").

D. PERCENTAGE GOALS

The MWSBE goals and PDBE goals, if any, for the Work are specified in Document 00800 – Supplementary Conditions Goals.

E. CONTRACTOR RESPONSIBILITIES

1. **Prior to Award:**
The Bidder shall submit MWSBE documents in accordance with the requirements of Document 00410 – Bid Form Part A.

a. In accordance with the Code of Ordinances and the OBO Good

Faith Efforts Policy (Attachment A), the Department shall approve an Apparent Low Bidder's MWSBE Participation Plan, Document 00470 (the "Bidder's Plan" or "Plan"), within three business days of the Bid Opening only if the Department representative determines that Bidder's Plan meets the advertised Contract Goal and is administratively complete.

b. If the Department cannot approve the Bidder's Plan, it shall forward the Plan to OBO, who shall review the Bidder's Plan, and if applicable, the Bidder's Document 00471 (Record of Good Faith Efforts) and Document 00472 (Pre-Award Deviation Request) and determine whether the Bidder has made Good Faith Efforts to meet the Contract Goals within 10 business days of the Bid Opening.

c. If OBO determines that the Bidder has failed to provide a valid participation plan or make Good Faith Efforts or if the Bidder fails to provide documents and associated information required by this Document 00808 or reasonably requested in writing by OBO, OBO may declare the Bidder to be non-responsible.

d. If OBO determines that the Bidder has made Good Faith Efforts, OBO may approve the Bidder's Contract Goal Deviation request. Thereafter, the Bidder/Contractor shall be bound by the Plan, as approved or modified by OBO.

e. The Contractor shall:

(1) ensure that all MWSBE firms listed in the Plan are certified by the Office of Business Opportunity prior to bid date. Qualified, non-certified firms may obtain priority consideration for certification if no more than two firms are certified with the same capability as the non-certified firm.

(2) execute written contracts with all certified Subcontractors and Suppliers. All such contracts must be executed and sent to OBO and Contracting Department within 30 days after the date of the Notice to Proceed and must include provisions set forth in Articles 3 and 5 of Document 00700, General Conditions; and

(3) designate an MWSBE liaison officer who will administer the Contractor's MWSBE program and who shall document and maintain records of Good Faith Efforts to subcontract with MWSBE Subcontractors and Suppliers.

2. After Award:

a. The Contractor shall submit MWSBE Monthly Utilization Reports, as requested in Article II above.

b. The Contractor shall complete and submit to OBO a deviation

request if the Contractor reasonably believes that it will not achieve the Business Enterprise Program Participation Plan Percentage documented in the Plan. The Contractors shall also submit to OBO, with a copy to the Contracting Department, a Record of Post-Award Good Faith Efforts (Document 00571) for each Certified Firm that the Contractor does not use in accordance with the Approved Plan before the Contractor uses another firm to perform the work.

c. The Contractor shall conform to the Plan unless OBO approves a deviation request. OBO shall approve or reject a request for deviation within five business days of receipt of the request.

d. OBO shall approve a deviation request if:

(1) for a reason beyond the Contractor's control, the Contractor is unable to use the certified MWSBE firm in the Plan to perform the specified work. In such cases, the Contractor shall use and document Good Faith Efforts to find a similarly qualified, certified MWSBE firm to perform such specified work; or

(2) the Contractor reasonably believes that, due to a change of scope, execution of the work in accordance with the directions from the Contracting Department is unlikely to meet the terms of the Plan. In such cases, the Contractor shall use and document Good Faith efforts to achieve a reasonable amount of MWSBE participation on the remaining work on the Contract.

(3) OBO shall not unreasonably withhold approval of a deviation request.

e. After the Date of Substantial Completion, OBO shall evaluate the Contractor's Good Faith Efforts towards meeting the Plan, as it may be amended.

f. If the Contractor fails to conform to the Plan and fails to submit a Post-Award Deviation Request or provide documents and associated information required by the Good Faith Efforts Policy or reasonably requested in writing by OBO, OBO may impose sanctions in accordance with Article VI of this Document 00808.

F. ELIGIBILITY OF MWSBE FIRMS FOR SUBCONTRACTING

1. To ensure that the City's Business Enterprise Program benefits only those firms that are owned and controlled by a minority person(s), a woman (women), a person(s) with a disability, or a small business enterprise, the Office of Business Opportunity will certify the eligibility of MWSBE and PDBE Contractors, Subcontractors, and Suppliers. Contact the

OBO Certification Division at 832-393-0600 for information regarding certification.

2. Firms must be certified by OBO at the time of bid in order to be counted towards meeting MWSBE goals. OBO maintains a Certified Minority, Women and Small Business Enterprises and Persons with Disabilities Business Enterprises Directory on the City's website. This Directory also lists federally-designated Disadvantaged Business Enterprises (DBEs).

G. DETERMINATION OF MWSBE PARTICIPATION

MWSBE participation shall be counted toward meeting the Contract Goals in response to the following:

1. Contractor may count toward its Contract Goals only those MWSBE Subcontractors/ Suppliers performing a Commercially Usefully Function.
   a. **COMMERCIALLY USEFUL FUNCTION** means a discrete task or group of tasks, the responsibility for performance of which shall be discharged by the MWSBE firm by using its own forces or by actively supervising on-site the execution of the tasks by another entity for whose work the MWSBE firm is responsible. In determining whether a certified firm is performing a commercially useful function, factors including but not limited to the following shall be considered: (1) whether the firm has the skill and expertise to perform the work for which it is being utilized and possesses all necessary licenses; (2) whether the firm is in the business of performing, managing, or supervising the work for which it has been certified and is being utilized; and (3) whether it is performing a real and actual service that is a distinct and verifiable element of the work called for in a contract. Without limiting the generality of the foregoing, a MWSBE will not be considered to be performing a commercially useful function, if it subcontracts more than 50 percent of a contract being counted toward the applicable Contract Goals, unless such subcontracting in excess of 50 percent has been expressly approved by OBO either pre-bid or post award.
   b. OBO shall approve a Plan Deviation Request if the Contractor demonstrates that the industry standard for the type of work involved is to subcontract over 50 percent of the work.

2. Once a firm is certified as a MWSBE firm, the total dollar value of the subcontract awarded to the MWSBE firm is counted toward the Contract Goals, counting only the work in which the MWSBE has performed a

Commercially Useful Function. The use of one MWSBE certified firm to meet multiple goals (e.g. MBE, WBE, SBE goals) on a contract is prohibited, unless expressly approved by OBO. Safety and Participation goals do not count as a single goal concerning MWSBE/DBE requirements.

3. The dollar value of the work performed by a certified Prime Contractor may not be counted toward the MWSBE goal unless the certified Prime Contractor is a part of a joint venture. When the Contractor or Subcontractor is in a joint venture with one or more MWSBE firms, OBO shall determine the percent of participation resulting from such joint venture to be counted toward the Contract Goals. The City may count towards the Contractor's MWSBE contract goal that portion of the total value of the contract amount paid to an MWSBE joint venturer equal to the distinct, clearly defined portion of the contract work performed by the MWSBE.

4. A MWSBE Supplier's participation will be counted towards the MWSBE goals if all of the following criteria are met. The MWSBE Supplier must:
(a) negotiate price;
(b) determine quality and quantity;
(c) order the materials;
(d) show that the invoice is in the certified firm's name;
(e) pay for the material itself;
(f) control delivery; and
(g) be certified to provide the supplies in the appropriate NAICS code.

If the listed criteria above are not met, only the entire amount of fees or commissions charged for assistance in the procurement of the supplies and materials, or fees or transportation charges for the delivery of supplies or materials required on a job site will be counted towards the MWSBE goal. To be counted, proof must be provided of the fees paid and the fees must be reasonable and not excessive as compared with fees customarily allowed for similar services. MWSBE Supplier participation may account for no more than 50% of the MWSBE participation plan.

5. The OBO Policy and Procedures Manual, as amended from time to time, shall apply to the Contract for other determinations regarding counting MWSBE participation not explicitly provided for in the Contract.

H. CONTRACTOR COMPLIANCE

To ensure compliance with MWSBE requirements, OBO and the Department

will monitor Contractor's efforts regarding MWSBE Subcontractors/Suppliers during the performance of this Contract. This may be accomplished through the following: job site visits; reviewing of records and reports; and interviews of randomly selected personnel.

I. RECORDS AND REPORTS

1. In accordance with II.A of this Document, the Contractor shall submit an initial report outlining MWSBE participation 40 days after the Notice to Proceed date, and on or before the 15th day of each month thereafter until all MWSBE subcontracting or material supply activity is completed. Each report shall cover the preceding month's activity. The Contractor shall use the MWSBE Contract Compliance and Monitoring System (B2G Now) to meet this requirement.

2. Contractor shall maintain the following records for review upon request by OBO or the Department:

   a. Copies of executed Subcontractor agreements and purchase orders;
   b. Documentation of payments and other transactions with MWSBE Subcontractors/ Suppliers; and
   c. Appropriate explanations of any changes or replacements of MWSBE Subcontractors/Suppliers. All replacement MWSBE Subcontractors/Suppliers must be certified by OBO.
   d. Any other records required by OBO or Contracting Department.

3. If a Participation Plan Percentage is not being met, the monthly report shall include a narrative description of the progress being made in MWSBE participation. If sufficient MWSBE Subcontractors or Suppliers to meet the Participation Plan Percentage are being utilized, they should be identified by name and the dollar amount paid to date for work performed or materials furnished by each MWSBE during the monthly period. Reports are required when no activity has occurred in a monthly period.

4. Contractor shall retain all such records for a period of four years following completion of the Work and shall be available at reasonable times and places for inspection by authorized representatives of the City including the City Controller.

IV. SANCTIONS:

A. SUSPENSION PERIOD AND WAIVER

Pursuant to Section 15-86 of the Code of Ordinances, OBO is authorized to suspend any Contractor who has failed to make Good Faith Efforts for a period of up to, but not to exceed, five years.

B. GUIDELINES FOR IMPOSITION OF SANCTIONS

1. General:

a. OBO shall not impose any sanction except upon evidence of specific conduct on the part of a MWSBE or Contractor that is inconsistent with, or in direct contravention of, specific applicable requirements for Good Faith Efforts.

b. Imposition and enforcement of suspensions shall be consistent with applicable state law.

2. Severity of Sanctions:

a. In determining the length of any suspension, OBO shall consider the following factors:

(1) Whether the failure to comply with applicable requirements involved intentional conduct or, alternatively, may be reasonably concluded to have resulted from a misunderstanding on the part of the Contractor or MWSBE of the duties imposed on them by Article V of Chapter 15 of the Code of Ordinances and these procedures;

(2) The number of specific incidences of failure by Contractor or MWSBE to comply;

(3) Whether the Contractor or MWSBE has been previously suspended;

(4) Whether the Contractor or MWSBE has failed or refused to provide OBO with any information requested by OBO's Director or required to be submitted to OBO's Director pursuant to law or these procedures;

(5) Whether the Contractor or MWSBE has materially misrepresented any applicable facts in any filing or communication to OBO; and

(6) Whether any subsequent restructuring of the subject business or other action has been undertaken to cure the deficiencies in meeting applicable requirements.

b. Suspensions may be for any length of time not to exceed five years. Suspensions in excess of one year shall be reserved for cases involving intentional or fraudulent misrepresentation or concealment of material facts, multiple acts in contravention of

applicable requirements, cases where the Contractor or MWSBE has been previously suspended, or other similarly egregious conduct.

C. APPEALS

A decision to implement a suspension may be taken after notice and an opportunity for an informal conciliation conference with OBO and a hearing by the Contract Compliance Commission. Commission members shall not have participated in the actions or investigations giving rise to the suspension hearing.

D. NOTICE

1. Prior to imposing any suspension, OBO shall deliver written notice to the Contractor or MWSBE setting forth the grounds for the proposed suspension and setting a date, time, and place to appear for an informal conciliation conference with OBO, in addition to information regarding the appearance before the Contract Compliance Commission for a hearing on the matter.

2. Any notice required or permitted to be given hereunder to any Contractor or MWSBE may be given either by personal delivery or by certified United States mail, postage prepaid, return receipt requested, addressed to their most recent address as specified in the records of the Office of Business Opportunity or in the Contract if no address is on file with the Office of Business Opportunity.

E. HEARING PROCEDURES

Proceedings before the Contract Compliance Commission shall be conducted in accordance with Section 15-23 of the Code of Ordinances. If the Commission, in a written decision, finds that a suspension is supported by the evidence presented, the Commission shall submit its recommendation to the Mayor and City Council.

ATTACHMENT A

City of Houston
Office of Business Opportunity
Good Faith Efforts Policy

General Policy.

Good Faith Efforts are steps taken to achieve an Contract Goal or other requirements which, by their scope, intensity and usefulness demonstrates the bidder's responsiveness to fulfill the business opportunity objective prior to the award of a contract, as well as the contractor's responsibility to put forth measures to meet or exceed the Contract Goal throughout the duration of the contract.

Good Faith Efforts are required to be made and demonstrated by an apparent successful bidder on goal oriented contracts or proposer on a regulated contract prior to award of a contract. Good Faith Efforts are required on professional services and construction contracts and on procurement of goods and non-professional service contracts with goals. If a bidder, when submitting a participation plan at the time of bid or proposal submission, anticipates it cannot or will not meet the Contract Goal prior to the award, the bidder must demonstrate to Office of Business Opportunity ("OBO") it has made Good Faith Efforts to meet the Contract Goal, to be eligible for the contract award.

Good Faith Efforts shall be evaluated on a case-by-case basis in making a determination whether a bidder or contractor is in compliance with this policy. The efforts employed by a bidder or contractor should be those that one could reasonably expect a bidder or contractor to take if the bidder were actively and aggressively attempting to obtain MWSBE participation sufficient to meet the Contract Goal. Efforts taken that are mere formalities or other perfunctory acts shall not be considered Good Faith Efforts to meet Contract Goals.

The factors provided herein are representative of the types of actions OBO will consider in determining whether the bidder or contractor made Good Faith Efforts to obtain MWSBE participation to meet the Contract Goal. The factors prescribed below are not intended to be a mandatory checklist, nor is it intended to be exhaustive or exclusive. OBO may consider other factors or types of efforts that may be relevant in appropriate cases.

If a contractor fails to submit Good Faith Efforts documentation as provided in this Policy, it waives the right to appeal OBO decisions related to this Policy. OBO will review all the efforts made by the contractor, including the quality and quantity of those efforts.

Pre–Award.

A bidder must submit a participation plan (Document 00470) to OBO at the time the bidder submits the bid. If the participation by certified MWSBE subcontractors documented on the participation plan ("participation") is less than the Contract Goal, a bidder should submit a Record of Good Faith Efforts (Document 00471) with the bid. A bidder should also submit a request for a deviation (Document 00472) if the bidder, having used Good Faith Efforts, reasonably believes that it cannot meet the Contract Goal or a commercially useful deviation.

In making a determination that the bidder has made a good faith effort to meet the Contract Goals, OBO shall consider specific documentation[1] concerning the steps taken to obtain MWSBE participation, with a consideration of, by way of illustration and not limitation, whether the bidder demonstrated a genuine effort to comply with the following factors.

1. Attended any pre-bid or pre-proposal meetings scheduled by the City Department;

2. Followed up with MWSBEs that attended the pre-bid or pre-proposal meetings to discuss subcontracting and supplier opportunities and contacted MWSBEs listed in the City's online directory;

3. Conducted outreach with minority and women focused organizations and associations far in advance of solicitation due date (no less than 10 business days);

4. Identified and designated portions of the work to be performed by MWSBEs to increase the likelihood of meeting the Contract Goals (including where appropriate breaking down the contract into reasonably sized subcontracts to ensure participation);

5. Advertised subcontracting opportunities in news media focused towards minority and women persons far in advance of solicitation due date;

6. Provided MWSBEs with a point of contact that was knowledgeable about the project and possessed decision-making authority to answer questions from interested MWSBEs;

7. Provided a reasonable number of MWSBEs certified with timely written notices via email, mail, and/or fax and/or with documented contact regarding the subcontracting/supplier opportunities. A "reasonable number of MWSBEs"

[1] A list of common supporting documentation that may allow Contractors to support their good faith efforts can be found on the Office of Business Opportunity website at www.houstontx.gov/obo.

shall be based on the number of MWSBEs available in the directory;

8. Solicited the MWSBEs within a reasonable amount of time (no less than seven business days) before bid submission, as well as followed up with the MWSBEs solicited to determine if they were interested in submitting a bid or proposal or participating on a team.

9. Provided interested MWSBEs certified to perform the solicited work with prompt access to the plans, specifications, scope of work and requirements of the contract;

10. Negotiated in good faith with interested MWSBEs, and not rejecting MWSBEs as unqualified without sound reasons based on a thorough investigation of their capabilities;

11. Entered into a formal contract, or signing enforceable letters of intent with MWSBEs;

12. Provided an explanation to any MWSBE whose bid or price quotation is rejected, unless another MWSBE is accepted for the same work, as follows:

a. Where price competitiveness is not the reason for rejection, a written rejection notice including the reason for rejection will be sent to the rejected MWSBE firm;

b. Where price competitiveness is the reason for rejection, a meeting must be held with the price-rejected MWSBE, if requested, to discuss the rejection;

13. Made efforts to assist interested MWSBEs in obtaining bonding, lines of credit, insurance required for the contract, and documenting MWSBE denied by bona fide surety agents;

14. Ensured that the conditions and requirements for subcontracts are commensurate with industry standards and would not cause an economic hardship on MWSBEs, such as unnecessary insurance or coupling bid bonds with retainage;

15. Incorporated efforts not attempted earlier or on previous bids that appear more likely to lead to attaining the Contract Goal. Past performance on similar contracts with similar scopes will also be taken in consideration when determining Good Faith Efforts. A bidder that continues to make same efforts without any significant change in the level of participation may not be making Good Faith Efforts.

Post–Award.

The contractor must sign the approved participation plan (Document 00470 or Document 00570) prior to starting work on the Project. A contractor should submit a request for deviation (Document 00572) from OBO if the contractor, having made Good Faith Efforts, reasonably believes that it will not achieve the Participation Plan Percentage documented in the approved participation plan. Unless OBO approves a deviation, a contractor must submit to OBO a Participation Summary (Document 00660) prior to City Council's consideration of any close-out, term extension, or change order. If participation is less than anticipated in the approved participation plan, the contractor must submit a Record of Good Faith Efforts (Document 00571) along with the Participation Summary. A contractor that fails to submit a deviation request and Good Faith Efforts documentation waives the right to appeal OBO decisions related to this Policy.

If the contractor is awarded the contract and fails to achieve the established Participation Plan Percentage, the contractor must demonstrate to OBO its efforts to meet the Participation Plan Percentage and failure to do so based on circumstances that the contractor could not reasonably control. In determining whether the contractor made Good Faith Efforts to ensure full participation and achievement of the Participation Plan Percentage, OBO shall consider the following factors:

1. Whether the contractor designated an MWSBE liaison officer to administer the Contractor's MWSBE programs and to be responsible for maintenance of records of Good Faith Efforts.

2. Whether the contractor furnished prompt MWSBE Utilization Reports in a timely and accurate manner through the online Contract Monitoring System or via hard copy.

3. Whether the contractor responded to efforts to resolve disputes with MWSBEs, and genuinely attempted to resolve these issues.

4. Whether the contractor disclosed payment discrepancies timely and within the monthly reporting period;

5. Whether the contractor complied with the participation plan, unless the contractor received a deviation from the OBO Director and whether upon approval, the contractor made Good Faith Efforts to replace a removed MWSBE with another certified firm;

6. Whether the contractor furnished prompt written responses to written inquiries from the Director or any employee of OBO regarding the MWSBE's performance or information germane to the MWSBE's certification;

7. Whether the contractor ensured that at all times during the performance of any contract or subcontract the MWSBE firm is engaging in a commercially useful function as that term is defined in Chapter 15 of the City of Houston Code of Ordinances;

8. Whether the contractor provided the OBO information, or other material, that was factually accurate and free of material misrepresentation; and

9. Whether the contractor furnished prompt responses to requests for information, books and records needed to verify compliance from the department administering the Contract, the City Attorney and the City Controller;

10. Whether the contractor attended all meetings and mediation hearings as requested by the Director or his/her designee; and

11. How the contractor may be affected by change orders, with consideration given to the size of the change orders.

Change Orders.

The requirement to make Good Faith Efforts to achieve the approved Participation Plan Percentage is applicable to change orders. Contractors should make Good Faith Efforts to ensure that the Participation Plan Percentage remains substantially the same after the issuance of change orders. If a contractor cannot maintain substantially the same level of participation provided in the latest approved Participation Plan (Document 00470 or Document 00570) due to a change order, the contractor shall submit to the OBO Director and Contracting Department a Document 00571 (Post-Award Record of Good Faith Efforts) and Document 00572 (Post-Award Plan Deviation Request) in a timely manner that does not cause disruption to the project. In addition to other relevant factors, in evaluating whether Good Faith Efforts were made by the contractor to meet the Participation Plan Percentage despite change orders, the OBO Director shall consider the contractor's efforts to timely and efficiently deliver the project.

END OF DOCUMENT

Document 00820

WAGE SCALE AND PAYROLL REQUIREMENTS FOR ENGINEERING CONSTRUCTION

Wage Scale Requirements

1.1 Contractor and its Subcontractors must pay the general prevailing wage rates for building construction for each craft or type of worker or mechanic employed in the execution of any building construction or repair under the Contract in accordance with Chapter 2258 of the Texas Government Code and City of Houston, Texas Ordinance Nos. 85-2070, 2000-1114, 2001-152, 2006-91 and 2006-168, and 2009- 247 all as amended from time to time. City Council has determined the prevailing wage rate in the locality in which the work is being performed, which is set forth in Exhibit "A".

1.2 This prevailing wage rate does not prohibit the payment of more than the rates stated.

1.3 In bidding, Contractor warrants and represents that it has carefully examined the classifications for each craft or type of worker needed to execute the Contract and determined that such classifications in Exhibit "A" include all necessary categories to perform the work under the Contract.

1.4 The wage scale for engineering construction is to be applied to all site work greater than five feet from an exterior wall of new building under construction or from an exterior wall of an existing building.

1.5 If Contractor believes that an additional classification for a particular craft or type of worker is necessary to perform work under the Contract, it must submit with its bid a request to the Contract Compliance Division of the Office Of Business Opportunity ("OBO") to use an additional labor classification not listed in Exhibit "A" and specify the proposed new classification. OBO shall determine whether a proposed classification is already covered in Exhibit "A", and, if it is, specify which classification is appropriate. OBO's decision is conclusive. If OBO decides that a new classification is necessary, it will determine the appropriate prevailing wage rate for any resurveyed, amended, new, or additional craft or type of worker not covered by Exhibit "A". Such determination must be decided in accordance with procedures established by OBO, and in compliance with Chapter 2258 of the Texas Government Code and City of Houston, Texas Ordinance Nos. 85-2070, 2000-1114, 2001-152, 2006-91, 2006-168 and 2009-247 subject to City Council approval.

1.6 Contractor must not use any labor classification not covered by Exhibit "A" until such classification is established and approved for use by OBO.

1.7 A Contractor or Subcontractor who violates Chapter 2258 of the Texas Government Code must pay to the City, $60 per each worker employed for each calendar day or part of the day that the worker is paid less than the wage rates set forth in Exhibit "A".

1.8 The City may withhold money required to be withheld under Chapter 2258 of the Texas Government Code from the final payment to Contractor or earlier payments if City Council makes a determination that there is good cause to believe that Contractor has not complied with these provisions and Chapter 2258 of the Government Code, in which case the City may withhold the money at any time subsequent to the finding by City Council.

1.9 Contractor and Subcontractors must keep records specifying:

(1) the name and classification of each worker employed under the Contract; and

(2) the actual per diem wages paid to each worker, and the applicable hourly rate.

The records must be open at all reasonable hours for inspection by the officers and agents of the City.

1.10 The hourly cost of salary for non-exempt workers for labor in excess of 40 hours per worker per week, shall be calculated at 1.5 times the worker's base pay, plus 1.0 times fringe benefits, for the applicable craft and level.

Certified Payroll Requirements

2.1 Employees are paid weekly and payrolls are submitted weekly using the City of Houston's electronic payroll submission module, unless the prime Contractor has been instructed to do otherwise by the Office of Business Opportunity. When no work is done after a Contractor has started work, the Contractor is required to submit a weekly compliance statement indicating no work was performed. The payrolls must reflect the exact work and classification of the workers, the exact amount that they were paid. Workers must be paid the contracted amount (prevailing wage rates). The Contractor will be penalized $60.00 a day for each employee who is underpaid per Texas Government Code §2258-023 for all contracts.

2.2 Payrolls must be submitted electronically & indicate whether the worker worked inside or outside the building area when both wage rates are applicable to the contract.

2.3 Payrolls must be submitted each week until all work by the contractor is complete and the electronic payroll submission is marked as final in the system.

2.4 Payrolls must cover a seven day period from the start of the work week and must be consecutive seven day periods until all work is complete.

2.5 Payrolls must have employees' names, addresses, last four digits of the social security numbers, and job classifications. The job classifications must be the same as the classifications on the prevailing wage rate schedule.

2.6 A payroll deduction authorization form must be submitted for each employee for any deductions other than Federal and FICA taxes.

2.7 Employees must be paid overtime (time and a half) for all hours worked over 40 hours a week on both federally and City-funded contracts.

2.8 The Contractor has the responsibility to comply with all Internal Revenue Service rules and regulations. Contractors who submit certified payrolls with **Owner Operators (truckers)** must submit a signed tax liability statement from Owner Operator acknowledging their responsibility for Federal Income Tax and FICA reporting obligations.

2.9 If the Contractor wants to use the apprentice wage rates for an employee, the apprenticeship certificates must be submitted to the Office of Business Opportunity in advance of the employee working on the project and appearing on the payroll. You must comply with the listed number of journeymen to apprentices as listed.

2.10 A poster of the Prevailing Wage Rate Schedule should be clearly displayed on each job site from the time the project starts until the work is completed, or in case of annual service agreements, in the Contractor's office.

2.11 The Contractor shall submit the "Certificate from Contractor Appointing Officer or Employee to Supervise Payment of Employees" (Exhibit "B") to the Monitoring Authority listed in Document 00495 prior to final execution of the contract.

2.12 During the course of the work, ALL Subcontractors shall submit the "Certificate from Subcontractor Appointing Officer or Employee to Supervise Payment of Employees" (Exhibit "C") to the Monitoring Authority listed in Document 00495.

2.13 Upon completion of the Project, as part of the contract-awarding department's total clearance process, the Office of Business Opportunity's Contract Compliance Section must review whether the Wage Rate and Payroll Requirements were met and report the results to the department.

REST OF PAGE INTENTIONALLY LEFT BLANK

EXHIBIT "A"

LABOR CLASSIFICATIONS AND PREVAILING WAGE RATES FOR
ENGINEERING CONSTRUCTION 2015

CLASSIFICATION	RATE	CLASSIFICATION	RATE
Asphalt Distributor Operator	$14.06	Milling Machine Operator - Fine Grade	$13.53
Asphalt Paving Machine Operator	$14.32	Mixer Operator	$10.33
Asphalt Raker	$12.36	Motor Grader Operator- Rough	$14.23
Asphalt. Shoveler	$11.68	Motor Grader Operator	$15.69
Broom or Sweeper Operator	$12.68	Oiler	$12.12
Bulldozer Operator	$11.81	Painter-Structures	$18.62
Carpenter- Rough	$12.49	Pavement Marking Machine Operator	$11.18
Concrete Finisher- Paving	$12.98	Pile Driverman	$14.95
Concrete Finisher- Structures	$12.98	Pipe Layer	$12.12
Concrete Paving Curbing Machine Operator	$11.71	Reinforcing Steel Setter - Paving	$15.15
Concrete Paving Finishing Machine Operator	$13.07	Reinforcing Steel Setter - Structure	$14.39
Concrete Paving Joint Sealer Operator	$11.00	Roller Operator, Pneumatic - Self-propelled	$11.57
Concrete Paving. Saw Operator	$13.99	Roller Operator, Steel Wheel, Flat Wheel/Tamping	$11.57
Concrete Paving Spreader Operator.	$10.44	Roller Operator, Steel Wheel, Plant Mix Pavement	$11.92
Concrete Rubber . . .	$9.00	Scraper Operator	$13.47
Crane Clamshell Backhoe Derrick, Dragline, Shovel Operator	$12.71	Servicer	$13.97
Crusher and Screening Plant Operator	$11.29	Sign Installer - PGM	$8.54
Electrician * 3 Journeyman 2 Apprentice Allowed	$27.11	Slip Form Machine Operator	$11.07
Flagger	$10.33	Spreader Box Operator	$13.58
Form Builder/Setter- Structures	$12.23	Structural Steel Worker	$14.39
Form Liner- Paving and Curb	$12.34	Tractor Operator - Crawler Type	$13.68
Form Setter- Paving and Curb	$12.34	Tractor Operator- Pneumatic	$10.07
Foundation Drill Operator - Crawler Mounted	$17.43	Transit Mixer Truck Driver	$11.00
Foundation Drill Operator - Truck Mounted	$15.89	Truck Driver, Lowboy-float	$16.03
Front Loader Operator	$13.17	Truck Driver, Single-Axle - Heavy	$11.46
Laborer Common	$11.02	Truck Driver, Single-Axle - Light	$11.48
Laborer- Utility	$11.73	Truck Driver, Tandem Axle Semi-Trailer	$12.27
Manhole Builder	$9.00	Work Zone Barricade Servicer	$11.67
Mechanic	$16.96	eceive rate prescribed for craft performing operation to which welding is incidental	
* Apprentices- must be in an approved USDOL Program and cannot exceed ratios			

Engineering Prevailing Wages Classification Definitions

Asphalt Distributor Operator
Drives distributor truck, sets spray bars and operates valves and levers to control distribution of bituminous material for highway surfacing. May oil, grease or otherwise service and make adjustments to equipment as needed. Performs other related duties.

Asphalt Paving Machine Operator
Operates paving machine that spreads and levels asphaltic concrete on highway subgrade. Controls movement of machine, raises and lowers screed, regulates width of screed. May, oil, grease, service and make adjustments to equipment as needed. Performs other related duties.

Asphalt Raker
Distributes asphaltic materials evenly over road surface by raking and brushing material to correct thickness; directs Laborers when to add or take away material to fill low spots or to reduce high spots. Performs other related duties.

Asphalt Shoveler
A general term used on construction work covering many unskilled classifications requiring work of a physical nature. A laborer works with all crews doing everything from pick and shovel work to cleaning up lumber with hammer, shoveling and placing concrete, uses air tools, cleans concrete joints and fills joints with sealing compound from bucket or with hose and nozzle from a central source, applies coating of oil to inside face of forms, may help set and strip forms, unloads and transports reinforcing steel, cures newly poured concrete, helps lower pipe into ditch for pipelayers, builds fences, works with dirt crew keeping construction layout stakes out of the way of dirt moving equipment.

Broom or Sweeper Operator
Operates a self-propelled machine to sweep and clean roadway surfaces. May oil grease, service and make adjustments to equipment as needed. Performs other related duties.

Bulldozer Operator
Operates a crawler tractor with a bulldozer mounted in front of chassis to level, distribute and push earth or other material. May operate a ripper attachment to break up rock or other hard material. May use a push block on front of tractor to push load scrapers. May oil, grease, or otherwise service and make minor repairs to equipment as needed. Performs other related duties.

Carpenter, Rough
Works from plans to build, assemble, fit together, align, plum, and set in place forms for molding concrete structures. Forms may be wood, steel, aluminum, fiberglass or any other type of material. Checks form while concrete is placed. May install miscellaneous materials integral to concrete structures. May set precast concrete elements. Prepares for slipforming traffic rail and median barrier. May install permanent metal deck forms. May work with power tools Performs other related duties.

Concrete Finisher, Paving
Finishes the exposed surfaces of fresh concrete paving, median barrier and every element of concrete structures to the final grade and contour structures to the final grade and contour with the use of straight edges and steel trowels. Operates bridge deck finishing machine. Finishes concrete curbs and gutters. Finishes exposed surface of concrete after forms have been removed by patching imperfections with fresh concrete, rubbing surface with abrasive stone, and directing others in removing excess or defective concrete with power tools. Performs other related duties.

Concrete Finisher, Structures
A worker semi-skilled in concrete finishing who assists Concrete finisher by performing specific or general duties of lesser skill and keeping Concrete Finisher supplied with materials, tools, and supplies; cleaning working area an equipment; and holding materials and tools. Performs other related duties.

Concrete Paving Curbing Machine Operator
Operates self - propelled machine(s) which may or may not travel on concrete paving forms, spreading and leveling fresh concrete to grade by use of augers and screeds. May oil, grease or otherwise service and make adjustments to equipment as necessary. Performs other related duties.

Concrete Paving Finishing Machine Operator
Operates self - propelled machine(s) which may or may not travel on concrete paving forms, spreading and leveling fresh

concrete to grade by use of augers and screeds. May oil, grease or otherwise service and make adjustments to equipment as necessary. Performs other related duties.

Concrete Paving Joint Sealer Operator
Cleans and seals joints requiring a hot or cold sealing compound in concrete paving, sidewalks, driveway and approach slabs. May oil, grease or make necessary repairs adjustments to equipment as needed. Performs other related duties.

Concrete Paving Saw Operator
Operates a water-cooled power saw with either or an abrasive blade to saw expansion and contraction joints in concrete paving. May also be used to saw asphaltic pavements. May oil grease or otherwise service and make necessary adjustments to equipment as needed. Performs other related duties.

Concrete Paving Spreader Operator
Operates self - propelled machine(s) which may or may not travel on concrete paving forms, spreading and leveling fresh concrete to grade by use of augers and screeds. May oil, grease or otherwise service and make adjustments to equipment as necessary. Performs other related duties.

Concrete Rubber
Finishes the exposed surface of concrete masonry after the forms have been removed by patching holes and broken corners with fresh concrete, rubbing surface with abrasive stone to remove rough spots, and removing high spots and defective concrete with hand chisel and hammer or pneumatic chisel and powered abrasive stone. Performs other related duties.

Crane, Clamshell, Backhoe, Derrick, Dragline, Shovel Operator
A worker who operates a lattice boom type crane can hoist and move materials, raise and lower heavy weights and perform other related operations. May be crawler type or rubber tired. May include placement of rock riprap, clamshell, dragline, pipe and pile driving operations. May oil, grease or otherwise service and make necessary adjustments to equipment as needed. Performs other related duties.

Crusher and Screed Plant Operator
Operates a crusher or screening plant through which rock is run to break it into crushed stone for construction or to control flow of materials not needed. May include minor repairs and may service and make necessary adjustments to equipment as needed. Performs other related duties.

Electrician *3 Journeyman 2 Apprentice
Plans and directs the layout of metal electrical conduit, installs wiring systems, switch-panels, buss bars, works on overhead distribution systems and underground distribution systems. Performs other related duties.

Flagger
A worker who directs traffic in or around a construction site. May use signs or devices to direct traffic. May help assemble, position and clean devices or equipment used to direct traffic. Must be able to effectively communicate with the public. May require certain level of training by TXDOT specifications. Performs other related duties.

Form Builder/Setter, Structures
Fits together, aligns and sets to grade metal and wooden forms for placement of concrete. Forms may be wood, steel, aluminum, fiberglass or any other type of material. Checks forms while concrete is placed. May install miscellaneous materials integral to concrete structures. May set precast concrete elements. Prepares for slipforming traffic rail and median barrier. May install permanent metal deck forms. May work with power tools. Performs other related duties.

Form Liner, Paving & Curb
Fits together, panels align and sets to grade metal and wooden forms for placement of concrete. Works with survey crew to set stringline for panels or moles. Performs other related duties.

Form Setter, Paving & Curb
Fits together, align and set to grade metal and wooden forms for placement of concrete paving and curbs. Works with survey crew to set stringline for paving, curb and gutter curb. Performs other related duties.

Foundation Drill Operator, Crawler Mounted
Operates a hole-drilling machine that is crawler mounted. May include geotechnical operations such as soils nails, rock nails, tiebacks, anchors and jet grouting. May oil, grease or otherwise service and make necessary adjustments to equipment as needed. Performs other related duties.

Foundation Drill Operator, Truck Mounted
Operates a hole drilling machine that is mounted on the rear of a rubber tired vehicle or truck. May include soils nails, rock nails, tiebacks, anchors and jet grouting. Drive truck from location to location or may have laborer who drives truck. May oil, grease or otherwise service and make necessary adjustments to equipment as needed. Performs other related duties.

Front End Loader Operator
Operates a rubber tired, skid steer or crawler type tractor with an attached scoop type bucket on front end. Machine is used to load materials from stockpiles, excavation, charging batch plants, loading and unloading trucks. May be used with attachments in lieu of the bucket. May oil, grease or otherwise service and make necessary adjustments to equipment as needed. Performs other related duties.

Laborer, Common
A general term used on construction work covering many unskilled classifications requiring work of a physical nature. A laborer works with all crews doing everything from pick and shovel work to cleaning up lumber with hammer, shoveling and placing concrete, uses air tools, cleans concrete joints and fills joints with sealing compound from bucket or with hose and nozzle from a central source, applies coating of oil to inside face of forms, may help set and strip forms, unloads and transports reinforcing steel, cures newly poured concrete, helps lower pipe into ditch for pipelayers, builds fences, works with dirt crew keeping construction layout stakes out of the way of dirt moving equipment.

Laborer, Utility
Performs a variety of manual duties, usually working in a utility capacity by working on multiple projects and tasks where demands require workmen with varied experience and ability to work without close direction. Unloads and transports reinforcing steel. May occasionally place and tie reinforcing steel. Directs common laborers in pouring concrete. Erects shoring and bracing. Assists in installation of pipe. Installs, operate and maintains dewatering systems. May assist equipment operators in positioning machines, verifying grades and signaling operators. Directs truck drivers and scraper operators to dumping positions to maintain grades as directed. Uses power tools and air tools. May work as lead man in a labor crew. His performance of a wide variety of construction jobs distinguishes him from a helper assigned to a specific craft. Installs and maintains erosion control. Is more or less a general utility construction worker. May be second step in learning a skill, and may later become a helper in a specific classification. Performs other related duties.

Manhole Builder
Constructs a means of permanent access to water and sewer lines for maintenance purposes. This work consists of laying brick or concrete slab at bottom of ditch up to an approximate grade line near the surface of the ground. Brick or block is normally laid to form a nearly circular manhole. Brick or block is laid in by eyesight and is normally to a plumb line. Chipped or culled brick can be used quite often is. No effort may be made to keep mortar off the face of the brick and joints are not pointed. May apply coating of concrete to interior and exterior surface. Performs other related duties.

Mechanic
Assembles, set up, adjusts and maintains and repairs all types of construction equipment and trucks. He may perform the duties of a welder in repair of equipment. Performs other related duties.

Milling Machine Operator, Fine Grade
Operates a power-driven milling machine that planes material of the to roadbed and discharges the material into a hauling unit or a windrow. May oil, grease or otherwise service and make necessary adjustments to equipment as needed. Performs other related duties.

Mixer Operator
Performs a variety of manual duties, usually working in a utility capacity by working on multiple projects and tasks where demands require workmen with varied experience and ability to work without close direction. Unloads and transports reinforcing steel. May occasionally place and tie reinforcing steel. Directs common laborers in pouring concrete. Erects shoring and bracing. Assists in installation of pipe. Installs, operate and maintains dewatering systems. May assist equipment operators in positioning machines, verifying grades and signaling operators. Directs truck drivers and scraper operators to dumping positions to maintain grades as directed. Uses power tools and air tools. May work as lead man in a labor crew. His performance of a wide variety of construction jobs distinguishes him from a helper assigned to a specific craft. Installs and maintains erosion control. Is more or less a general utility construction worker. May be second step in learning a skill, and may later become a helper in a specific classification. Performs other related duties.

Motor Grader Operator, Rough
Operates a motor grader. Equipment is used to grade excavation and embankment and to lay asphalt, base and other materials. May blade haul roads and do other general motor grader work, but does not perform finish grade work to close

specification tolerances. This operator may be a learner in the first phase of learning the skills of motor grader work. May oil, grease or otherwise service and make necessary adjustments to equipment as needed. Performs other related duties.

Motor Grader Operator
Operates a motor grader. Equipment is used to grade excavation and embankment and to lay asphalt, base and other materials. May blade haul roads and do other general motor grader work, but does not perform finish grade work to close specification tolerances. This operator may be a learner in the first phase of learning the skills of motor grader work. May oil, grease or otherwise service and make necessary adjustments to equipment as needed. Performs other related duties.

Oiler
A learner or semi-skilled worker who under the direction of the watch engineer. May oil and grease or otherwise service all engines and necessary equipment as needed. He may clean and paint engine room as needed. Performs other related duties.

Painter, Structures
Paints and stains structural steel and concrete surfaces of bridges, retaining walls, or other structures. Directs cleaning and abrasive blasting of surfaces prior to painting or staining. Performs other related duties.

Pavement Marking Machine Operator
Operates machine used in laying paint stripes or markers on all types of paving. Loads machine with appropriate materials and may walk or ride on machine. May oil, grease or otherwise service and make necessary adjustments to equipment as needed. Performs other related duties.

Piledriverman
Sets in place, aligns, plumbs directs driving of timber, concrete, steel, pipe and any other type of piling. Sets, drives and pulls steel, concrete and other types of sheet piling. Rigs pile and leads and bracing. Signals operator. Splices piles before and after driving. Directs pile cutoff. May direct jetting or drilling equipment in connection with installing piles to grade. Performs other related duties.

Pipelayer
Installs concrete, clay, steel, ductile iron, plastic, corrugated pipe and any other type of pipe for storm drainage, water lines, gas lines and sanitary sewer lines. Lays underground communication and electrical ducts. May install and set electrical ground boxes, hand holes, manholes, inlets and other structures. Caulks joints, makes threaded and flanged connections. Installs valves and other accessories. Performs other related duties.

Reinforcing Steel Setter, Paving
Works from plans to lay out and install reinforcing steel within forms or in mats of concrete paving. May direct unloading of material. Determines rigging required to complete work. Gives direction to reinforcing steel worker (helper) or common or utility laborers. May install miscellaneous materials integral to concrete structure or paving. May work with power tools. Performs other related duties.

Reinforcing Steel Setter, Structure
Works from plans to lay out and install reinforcing steel within forms or in mats of concrete paving. May direct unloading of material. Determines rigging required to complete work. Gives direction to reinforcing steel worker (helper) or common or utility laborers. May install miscellaneous materials integral to concrete structure or paving. May work with power tools. Performs other related duties.

Roller Operator, Pneumatic, Self-Propelled
Operates a self-propelled machine with either steel wheels pneumatic tires, which is used to compact and smooth all bituminous materials. May oil, grease or otherwise service and make necessary adjustments to equipment as needed. Performs other related duties.

Roller Operator, Steel Wheel, Flat Wheel/Tamping
Operates a self-propelled machine with either steel wheels or pneumatic tires which is used to compact earth fills, subgrade, flexible base and all other types of materials except bituminous. May oil, grease or otherwise service and make necessary adjustments to equipment as needed. Performs other related duties.

Roller Operator, Steel Wheel, Plant Mix Pavement
Operates a self-propelled machine with either steel wheels pneumatic tires, which is used to compact and smooth all bituminous materials. May oil, grease or otherwise service and make necessary adjustments to equipment as needed. Performs other related duties.

Scraper Operator
Operates a self-contained wheeled tractor scraper both self loading or assisted by crawler tractors or other scrapers. Used to excavate and transport earth or other materials. May oil, grease or otherwise service and make necessary adjustments to equipment as needed. Performs other related duties.

Servicer
Drives a truck, which carries various fuels, oils, greases and filters. Must have knowledge of and is responsible for the correct oiling and greasing and changing of filters on equipment according to the manufacturers' specifications. Uses compressed air grease guns, wrenches and other tools. May make adjustments to clutches, brakes and other mechanical items. Keeps record of service preventive maintenance records. May have laborer assisting him. May require CDL if driving truck on public highways. Performs other related duties.

Sign Installer (PGM)
Sets forms, reinforcing steel, anchor bolts and pours concrete for Sign foundations. Fabricates and erects pipe and angle Frameworks by bolting, welding or other means prior to installation of signs that are normally prefabricated. Works from plans in location and drilling holes for proper location and alignment of signs. May direct hoisting of signs into place. Fastens signs to framework by bolting and other means. Locates and sets lighting brackets. May perform other work associated with signing projects. Supervises sign erector helper. Performs other related duties.

Slip Form Machine Operator
Cleans and seals joints requiring a hot or cold sealing compound in concrete paving, sidewalks, driveway and approach slabs. May oil, grease or make necessary repairs adjustments to equipment as needed. Performs other related duties.

Spreader Box operator
Operates spreader box by adjusting hopper and strike off blade so that the gravel, stone or other material may be spread to a specific depth on road surface during seal coat and surface treatment operations. May oil, grease or otherwise service and make necessary adjustments to equipment as needed. Performs other related duties.

Structural Steel Worker
Works from plans to lay out and install reinforcing steel within forms or in mats of concrete paving. May direct unloading of material. Determines rigging required to complete work. Gives direction to reinforcing steel worker (helper) or common or utility laborers. May install miscellaneous materials integral to concrete structure or paving. May work with power tools. Performs other related duties.

Tractor operator, Crawler Type
Operates a crawler tractor with a bulldozer mounted in front of chassis to level, distribute and push earth or other material. May operate a ripper attachment to break up rock or other hard material. May use a push block on front of tractor to push load scrapers. May oil, grease, or otherwise service and make minor repairs to equipment as needed. Performs other related duties.

Tractor Operator, Pneumatic
Operates a gasoline or diesel powered agricultural tractor that tows compaction rollers, plow, disc. water tanks, scrapers and other similar operations. May use other miscellaneous attachments. May oil, grease or otherwise service and make necessary adjustments to equipment as needed. Performs other related duties.

Traveling Mixer Operator
Drives a gasoline or diesel truck upon which is mounted a concrete mixer. Operates concrete mixer and dumps concrete on the grade, into forms or into concrete pumps or buckets. Cleans mixer drum. May require CDL license for on highway use. May service and make necessary adjustments for proper operation of equipment. Performs other related duties.

Truck driver, lowboy-Float
Drives a heavy-duty diesel powered truck to which is attached a trailer upon which heavy equipment is hauled. Driver is often required to operate heavy equipment to load or unload the lowboy. May require CDL license for on highway use. May service and make necessary adjustments for proper operation of equipment. Performs other related duties.

Truck driver, Single Axle, Heavy
Drive a light capacity truck for transporting loads of construction material. The truck is of single rear axle type, may have various kinds of beds attached, such as dump, flat bed, tank, etc. May require CDL license for driving on highway. May services and make necessary adjustments for proper operation equipment. Performs other related duties.

Truck driver, Single Axle-Light
Drive a light capacity truck for transporting loads of construction material. The truck is of single rear axle type, may have

various kinds of beds attached, such as dump, flat bed, tank, etc. May require CDL license for driving on highway. May services and make necessary adjustments for proper operation equipment. Performs other related duties.

Truck Driver, Tandem Axle, Semi-Trailer
Drives a diesel-powered tractor pulling a semi trailer hauling materials. Hauls dirt, rock, aggregates or other material. May require CDL license for driving on highway. May service and make necessary adjustments for proper operation of equipment. Performs other related duties.

Work Zone Barricade Servicer
Fabricates, erects and maintains temporary traffic control devices, including arrow boards, signs, barricades, channelizing devices, barrels and all message boards. May operates a truck during traffic control operations.

WELDERS - Receives rate for craft being performed to which welding is incidental.

EXHIBIT "B"

CERTIFICATE FROM CONTRACTOR APPOINTING OFFICER OR EMPLOYEE TO SUPERVISE PAYMENT OF EMPLOYEES

Project Name _____

_____

Project WBS#:_____Date_____

(I) (We) hereby certify that (I am) (we are) the **Prime Contractor** for _____

_____
(specify type of job)

in connection with construction of the above-mentioned Project, and that (I) (we) have appointed_____, whose signature appears below, to supervise the payment of (my) (our) employees beginning_____, 20___; that he/she is in a position to have full knowledge of the facts set forth in the payroll documents and in the statement of compliance required by the Copeland Act and the City of Houston, which he/she is to execute with (my) (our) full authority and approval until such time as (I) (we) submit to the City of Houston a new certificate appointing some other person for the purposes hereinabove stated.

_____ Phone:_____
(Identifying Signature of Appointee)

Attest: _____
(Name of Firm or Corporation)

By:_____ By:_____
(Signature) (Signature)

_____ _____
(Title) (Title)

NOTE: This certificate must be executed by an authorized officer of a corporation or by a member of a partnership, and shall be executed prior to and be submitted with the first payroll. Should the appointee be changed, a new certificate must accompany the first payroll for which the new appointee executes a statement of compliance required by the Copeland Act and the City of Houston.

EXHIBIT "C"

CERTIFICATE FROM SUBCONTRACTOR APPOINTING OFFICER OR EMPLOYEE TO SUPERVISE PAYMENT OF EMPLOYEES

Project Name _____

_____

Project WBS#:_____Date_____

(I) (We) hereby certify that (I am) (we are) the **Sub Contractor** for _____

_____
(specify type of job)

in connection with construction of the above-mentioned Project, and that (I) (we) have appointed_____, whose signature appears below, to supervise the payment of (my) (our) employees beginning_____, 20___; that he/she is in a position to have full knowledge of the facts set forth in the payroll documents and in the statement of compliance required by the Copeland Act and the City of Houston, which he/she is to execute with (my) (our) full authority and approval until such time as (I) (we) submit to the City of Houston a new certificate appointing some other person for the purposes hereinabove stated.

_____ Phone:_____
(Identifying Signature of Appointee)

Attest: _____
(Name of Firm or Corporation)

By:_____ By:_____
(Signature) (Signature)

_____ _____
(Title) (Title)

NOTE: This certificate must be executed by an authorized officer of a corporation or by a member of a partnership, and shall be executed prior to and be submitted with the first payroll. Should the appointee be changed, a new certificate must accompany the first payroll for which the new appointee executes a statement of compliance required by the Copeland Act and the City of Houston.

END OF DOCUMENT

City of Houston
Pay or Play Program Requirements

I. Pay or Play Program Overview

A. Purpose

The Pay or Play Program was established with Ordinance 2007-534 on July 1, 2007 and is governed by Executive Order 1-7. The Pay or Play Program (POP Program) creates a more level playing field and enhances fairness in the bid process between competing contractors that choose to offer health benefits to their workforce and those who do not. The program also recognizes and accounts for the fact that there are cost associated with health care of the uninsured citizens of the Houston and Harris County area.

B. Program Elements

1. Covered contracts:

I.) Advertised after July 1, 2007 or which is executed on or after the effective date of this Executive Order.
II.) Contracts valued at or above $100,000.00 (contract) and $200,000.00 (sub-contract) including contingencies, amendments, supplemental terms and/or change orders.
III.) Professional Service, Construction, and Service type contracts.

2. Contracts not covered:

I.) Any contract in which the primary purpose is procurement of property, goods, supplies, and or equipment.
II.) An inter-governmental contract, inter-governmental agreement or purchasing cooperative.

3. Covered employees: This program applies to employees of a covered contractor or subcontractor, including contract labor, who are over age 18, work at least 30 hours per week and work any amount of time under a covered city contract or subcontract.

4. Pay or Play Option:

I.) "Pays" by contributing $1.00 per covered employee per regular hour for work performed under the contract with the City; or
II.) "Plays" by providing health benefits to covered employees. Health benefits must meet or exceed the following standards:

- The **employer will contribute no less than $150 per covered employee per month** toward the total premium cost.
- The **employee contribution, if any amount, will be no greater than 50% of the monthly premium cost and no more than $150 per month.**

Note: (1)A contractor is deemed to have complied with section 5.4 of E.O. 1-7 with respect to a covered employee who is not provided health benefits if the employee refuses the benefits and the employee's contribution to the premium is no more than $40 per month. (2) If applicable the contractor has the option to both Pay and Play.

5. **Exemptions/Waivers:** The City of Houston will award a contract to a contractor that neither Pays nor Plays only if the contractor has received an approved waiver (Form POP-4 requested by City departments only).

6. **Administration**: Contractor performance in meeting Pay or Play program requirements will be managed by the contracting department. The Office of Business Opportunity (OBO) has administrative oversight of the program, including audit responsibilities (department compliance). Questions about the program should be referred to the Department POP Liaison an updated contact list is available on http://www.houstontx.gov/obo/popforms.html or call Gracie Orr with the Office of Business Opportunity at 832-393-0633.

II. Documentation and Reporting Requirements

A. Document that must be signed and returned to administering department with the bid/proposal.

1.) City of Houston Pay or Play Program Acknowledgment Form (Form POP-1) acknowledges bidder/proposers' knowledge of the program and its requirements, and the intention to comply.

B. Documents that must be signed and returned to administering department within a period designated by the department's Contract Administrator, upon notification of low bidder or successful proposer status:

1.) Certification of Compliance with Pay or Play Program (Form POP-2)

Note - Contractors that opt to "play" must provide proof of coverage, including document from insurance provider, and names of covered employees.

2.) List of Subcontractors (Form POP-3)

Note- Review the affidavit statement at the bottom of this form for further important POP Compliance information.

C. Contractors reporting requirements:

1.) Contractors that opt to Pay
Provide monthly reports to administering department, detailing names of employees, hours worked, exemptions (if any) and amount owed. (Form POP-5)

2.) Contractors that opt to Play
Provide periodic reports to the contract administrator showing proof of coverage (insurance premium invoice or insurance card) reporting schedule will be determined by administering department based on length of contract. (Form POP-7)

3.) Employee Waiver Request
Contractor may request POP program waiver by submitting the request on POP-8 if the employee is less than 18 years old, employee has other health coverage such as through spouse or parents, or Medicare/Medicaid.

Note proof of coverage must be provided in the form of a copy of the employee's insurance card. (Remove social security numbers if applicable)

4.) Contractors shall submit an initial report with the second invoice to the department. Payments based on monthly reports are due to the contracting department with submission of the following month's invoice. Payments may be made out to the City of Houston preferably via cashier check or business check.

III. Compliance and Enforcement

The Office of Business Opportunity will audit program compliance. Contractors willfully violating or misrepresenting POP program compliance will be subject to corrective and/or punitive action, including but not limited to the assessment of fines and penalties and/or debarment. The Pay or Play Program Requirements Form and all other POP Forms are available for downloading from the City of Houston's Website at http://www.houstontx.gov/obo/popforms.html

Document 00931

REQUEST FOR INFORMATION

1. PROJECT No.: S-000100-0016-4
2. RFI No.: _____
3. PROJECT NAME: New/Replacement of Water Well – Forest Cove III
4. CONTRACTOR: [Contractor Name]
5. CONTRACT No.: _____
6. SPECIFICATION Nos.: _____
7. DRAWING Nos.: _____
8. RESPONSE CODE: [_] CRITICAL [_] ROUTINE 9.DATE RESPONSE REQUIRED: _____
10. INFORMATION REQUIRED:

11. _____ _____ _____
CONTRACTOR (Signature) TITLE DATE

12. RESPONSE:

13. _____ _____
PROJECT MANAGER (Signature) DATE

14. **If Contractor believes the response given in Item 12 requires an adjustment in Contract Price or Contract Time, Contractor shall submit a timely proposal so as not to delay Contractor's Work in accordance with General Conditions, Article 7 - Changes in the Work.**

END OF DOCUMENT

Section 01110

SUMMARY OF WORK

PART 1 GENERAL

1.01 SECTION INCLUDES

A. Summary of the Work including work by City, City furnished products, Work sequence, future Work, Contractor use of Premises, and City occupancy.

1.02 WORK COVERED BY CONTRACT DOCUMENTS

A. Work of the contract is for the drilling, construction, testing and equipping of Forest Cove Water Well No. 5 and related facilities in the City of Houston Forest Cove Well Field.

B. Work includes:

1. Mobilization for Forest Cove Water Well No. 5 as described in Section 01502.

2. Drill, construct, test and equip Forest Cove Water Well No. 5 of the Forest Cove Well Field, including:

a) Pilot hole drilled to a base depth of 1,150 feet with driller's log, circulated drill cutting samples, mechanical drift indicator survey, and geophysical logs, all as described in Section 02529.

b) Reaming of pilot hole to a base depth of 715 feet, continuous alignment survey of uncased reamed hole, setting 20-inch surface casing to a base depth of 710 feet, sizing and alignment survey of surface casing in place, and cementing of surface casing, all as described in Section 02529 and shown on Drawings.

c) Underreaming the pilot hole below the surface casing to a diameter of at least 26 inches to a depth of 985 feet, and making a section gauge log of the underreamed hole, all as described in Section 02529 and shown on Drawings.

d) Production casing set in place with a base total length of 355 feet, 173 linear feet of 14-inch steel blank pipe and 182 linear feet of 14-inch stainless steel screen wrapped on stainless steel pipe, to a base depth of 985 feet, all as described in Section 02529 and shown on Drawings.

e) Graveling, sterilizing and developing the well, all as described in Section 02529 and shown on Drawings.

f) Furnishing the test pump, motor and equipment, and testing the well, all as described in Section 02529.

g) Concrete foundation for permanent pump, complete and installed as described in Sections 02536, 03315 and 15162 and shown on Drawings.

h) Permanent pump and electric motor, discharge assembly, 460 feet of column pipe, bowl assembly and accessory equipment, all installed and tested and complete as described in Section 15162.

i) A 1/4-inch, PVC coated, stainless steel air-line tubing and a 1-1/4-inch Schedule 80 PVC solution tubing, all set in place to a base depth of 460 feet, all as described in Section 15162 and shown on Drawings.

j) Discharge piping manifold, complete, including valves, air and vacuum release, fittings, meters, blow-off, foundations, splash box, and auxiliary equipment, all installed and tested and complete as described in Sections 01570, 02316, 02320, 02521, 02536 and 03315 and as shown on Drawings.

k) Chlorine line from existing chemical room to welded steel fill line, all complete and installed as described in Section 02536 and shown on Drawings.

l) Well yard clearing and grubbing, grading, surfacing, fencing, sound barrier, seeding and sodding, removing designated existing fencing, all complete and installed as described in applicable provisions of Sections 01570, 02233, 02821, 02911, 02921, 02922 and 03315 and shown on Drawings.

3. 8-inch Ductile Iron Piping (DIP) between welded steel discharge piping and welded steel connection to ground storage tank, all installed, tested and complete as described in Sections 02316, 02320, 02501, 02511 and as shown on Drawings.

4. 8-inch welded steel pipe connection to ground storage tank, including valve and fittings, all installed, tested and complete as described in Sections 02316, 02320, 02502, 02511, 02521 and as shown on Drawings.

5. All electrical and related work for Forest Cove Well No. 5, including provide and install well solid-state reduced voltage starter, lighting and receptacles, pump motor feeders, instruments, and all required appurtenances and foundations, as described in Sections 03315 and Division 16 - Electrical Specifications and shown on Drawings.

6. Multilin programming. The Contractor is responsible for all programming of the proposed Multilin and for coordinating requirements with COH SCADA group and motor manufacturer.

7. Controller programming. The Contractor is responsible for all programming of the existing Siemens Simatic 505 and for coordinating sequence of operations and requirements with COH SCADA group.

8. Trench Safety System as described in Section 02260 and as shown on the Drawings.

9. Splash-pad inlet and storm sewer system, including storm sewer piping, subsurface drainage pipe, junction box, manholes, area inlet, and connection to existing inlet, and culverts under new driveway, all complete and installed as described in applicable provisions of Sections 01570, 02084, 02087, 02316, 02317, 02320, 02506, 02536 and 03315 and shown on Drawings. Contractor shall coordinate with CenterPoint Energy to determine the depth of the existing gas line that the proposed storm sewer system will cross and shall coordinate any required relocation of the gas line with CenterPoint Energy.

10. Permeable gravel paving made with porous flexible paving, all complete and installed as described in applicable provisions of Sections 01570 and 02730 and shown on Drawings.

11. Permeable gravel sidewalk made with porous flexible paving, all complete and installed as described in applicable provisions of Sections 01570 and 02730 and shown on Drawings.

12. Reinforced filter fabric barrier, installed as described in Section 01570 and as shown on Drawings.

13. Inlet protection barrier, installed as described in Section 01570 and as shown on Drawings

C. Well requirements:

1. A pilot hole shall be drilled prior to continuing with drilling the well at the site. Section 02529 includes a provision for paying the Contractor a lump sum amount if the pilot hole should be abandoned.

2. Well No. 5 is to meet certain specific capacity requirements, pumping rate requirements and suspended solids production limits. These are described in Section 02529. Monetary penalty clauses for not meeting well specific capacity requirements and suspended solids production limits are given in Section 02529.

1.03 CASH ALLOWANCES

A. A cash allowance not to exceed $30,000.00 shall be reimbursed to the Contractor for the City of Houston Building Permits at Well No. 5. The reimbursements shall be based on the actual costs of the permits.

1.04 CITY FURNISHED PRODUCTS

A. Items furnished by City for installation and final connection by Contractor: SCADA system software.

B. Contractor's Responsibilities:

1. Arrange and pay for product delivery to site.

2. Receive and unload products at site; inspect for completeness or damage.

3. Handle, store, install, and finish products.

4. Repair or replace damaged items.

1.05 WORK SEQUENCE

A. Construct Work in phases during the construction period in accordance with the accepted construction schedule; coordinate construction schedule and operations with City. City reserves the right to change the sequence of work to meet project requirements at no penalty to City.

B. Coordination of the Work: Refer to Section 01312 - Coordination and Meetings.

1.06 CONTRACTOR USE OF PREMISES

A. Comply with procedures for access to the site and Contractor's use of rights-of-way as specified in Section 01145 - Use of Premises.

B. Construction Operations: Limited to property, rights-of-way or easements provided by City and designated area shown on the plans.

C. Utility Outages and Shutdown: Provide notification to City and private utility companies (if applicable) a minimum of 48 hours, excluding weekends and holidays, in advance of required utility shutdown. Coordinate all work as required.

D. The Contractor is responsible for cleaning any drilling fluids or other materials sprayed or splashed onto the ground storage tank at Well 5 and repainting a portion of the tank, if needed.

1.07 WARRANTY

A. Comply with warranty requirements in accordance with Document 00700 - General Conditions. Warranty all work, including equipment installed, for a minimum of 12 months following Substantial Completion.

B. In addition to the above warranty, assign to City all warranty from equipment and materials issued by manufacturers or Subcontractors which extends beyond the month period specified above.

1.08 ALTERNATES

A. No alternate bid items are specified or will be accepted for this project.

1.09 CITY OCCUPANCY

A. City will occupy a portion of the Forest Cove Water Plant III for its operations.

1.10 GEOLOGIC, HYDROLOGIC AND DRILLING CONDITIONS

A. Before submitting bid, make necessary geologic, hydrologic, drilling and construction condition studies insofar as they may affect bid for this Work. No plea of ignorance of conditions that exist or that may hereinafter exist or of conditions or difficulties that may be encountered in the execution of Work under this contract will be accepted as an excuse for failure or omission of the Contractor to fulfill in every detail all of the requirements of Contract, nor will such be accepted as a basis for any claim whatsoever for extra compensation or for an extension of time.

1.11 QUANTITIES AND MEASUREMENTS

A. The depths and lengths and the pumping and testing times given herein are estimated and approximate. They are used for the purpose of obtaining lump sum and unit price bids covering these items, but are not necessarily the exact depths and lengths and pumping and testing times that will be required during actual drilling, construction and testing. Deviations from these depths, lengths and times are covered by the unit prices quoted in the Schedule of Extra Unit

Prices in Document 00410 - Bid Form and apply as additions or deductions in depths, lengths and times.

1.12 INSPECTION

A. City will appoint such representatives as City may deem proper to inspect the materials furnished and work done under this Contract to ensure that said materials are furnished and said Work is done in accordance with Specifications and other Contract Documents.

1.13 CONTRACTOR'S DUTY

A. Provide personal attention to prosecution and completion of Work and be present continually at the site of the work either in person or by duly authorized representative fully authorized to act for him in his absence.

B. The Contractor is responsible for obtaining Cyberkeys to access City of Houston groundwater facilities at no additional cost to the City of Houston. The Contractor shall contact BLTI at 832-698-8000 to make arrangements to purchase the number of Cyberkeys for each drilling rig crew, technicians, field superintendents, etc. Once the Cyberkeys have been obtained, the Contractor is responsible for contacting the City of Houston Security Management Section to request access to the well sites by providing the name of the person each key will be assigned, a list of sites where access is needed, each key's serial number and expected hours of operation. Once the keys have been programmed, it is the Contractor's responsibility to keep the keys updated as needed and at the Contractor's expense.

1.14 CONTRACTOR'S EXPERIENCE

A. Contractor must have been regularly engaged in drilling and construction of water wells of this general size and yield for the past five years in the Texas Gulf Coast area and be thoroughly familiar with the construction and development of gravel-walled wells. During the past five years, he must have successfully and satisfactorily constructed and completed at least five wells substantially equivalent to the wells being bid in terms of depth, diameter, method of construction and development, yield, and equipping of wells. Provide to City names, locations and descriptions of five such wells as a part of bid submittal. Provide the City the names and Texas Drillers License Number of drillers who will work on the project as requested by the City after the Notice of Intent to Award has been issued. The Contractor must determine that he meets experience requirement before submitting a bid or that he has a working arrangement with a Subcontractor who does meet this experience.

1.15 CODE REQUIREMENTS AND PERMITS

A. Perform work in accordance with applicable statutes, ordinances, codes and regulations of governmental authorities having jurisdiction. The Contractor shall be fully responsible and obligated to maintain procedures for safety of all work, personnel and equipment involved in the project. Contractor shall obtain any permits required for construction of the well and other facilities at his own expense. Well sites are located in proximity to residential areas and contractor is responsible for noise control.

1.16 PURPOSE

A. This project is part of the City's program to upgrade and rehabilitate ground water production facilities. It will meet the area's water demand and ensure compliance with the Texas Commission on Environmental Quality regulations.

PART 2 P R O D U C T S

2.01 QUALITY OF MATERIALS AND WORKMANSHIP

A. Provide all new materials. All pipe, screen, and other equipment furnished shall have the manufacturers' type and quality designations stamped on them by manufacturers. Provide City with written proof, at time of delivery, the required types and qualities of materials being furnished. Provide City with mill test certificates on all piping, casing and pump column supplied on the Project.

PART 3 E X E C U T I O N

3.01 MEASUREMENTS AND DIMENSIONS

A. Before purchasing any material or performing any work, Contractor shall verify all measurements and dimensions of the work and shall be responsible for the correctness thereof. Any discrepancy that may be found shall be reported to City for verification before proceeding with the work. No extra charge or compensation will be allowed for differences between actual measurements and dimensions indicated on the drawings.

3.02 SUBCONTRACTS

A. The Contractor shall not employ any Subcontractor not acceptable to City. Failure of City to object to any Sub contractor proposed by the Contractor shall in no manner relieve or limit the Contractor's responsibility for the work done by the Subcontractor, and such failure to object by City shall in no manner by considered as a waiver, consent, acceptance or ratification of any work done by such Subcontractor, but all such work and the conformance thereof to the Plans and Specifications shall continue to be the responsibility of the Contractor. Approval of a Subcontractor shall be subject to at least the following requirements:

1. Proof of financial ability and adequate insurance to perform the amount of work required of him and to provide assurance that he can maintain any guarantees required of him.

2. Evidence of acceptable completion on not less than five previous projects of work similar in scope and final effect to that required of him on this project. (In case of conflict between this and Sub-Item 1.14 of Item 1, "Contractor's Experience," Sub-Item 1.14 shall govern.)

3. A reputation for production of materials and/or work of the quality indicated in the Specifications.

4. Demonstrated ability to comply with requirements of this Item or Items of the Specifications applicable to his work.

3.03 DISPOSAL OF WATER, MUD AND OTHER WASTES

A. No mud or sand pits may be excavated or built on these sites. The Contractor shall supply and use steel tanks for mud pits and sand containment. All water, mud and other wastes which result from drilling, construction and testing operations of the Contractor shall be disposed of as approved by City and by any local agencies responsible for drainage in the vicinity of the well sites. Before submitting his proposal, the contractor shall investigate the means of such disposal. Contractor shall prepare and obtain any permits necessary for such disposal at his own expense, and he shall subsequently act accordingly to dispose of the water, mud and other wastes properly.

B. Before commencing drilling operations, the Contractor shall submit a detailed written plan to City for all such disposal and shall obtain City's review of such plan. City's review, however, shall not make City responsible for the adequacy of such plan, or for obtaining any permits for the Contractor, or to any other party for any damage or loss occasioned by the disposal of the water, mud and other wastes.

C. The Contractor shall at all times maintain the premises to present a neat appearance. He also shall not discharge or allow the spillage of oil or any other material injurious to vegetation. If any oil or other material injurious to vegetation is accidentally spilled, it shall be immediately cleaned up and removed from the ground by the Contractor, and the Contractor shall pay for any damage caused by it.

3.04 WELDING

A. Welding in the field for the described components shall be performed in accordance with best practices in construction of large deep water wells and accessory equipment in the Houston area. The field welding shall be inspected by representatives of testing laboratory.

B. Field welding of any conductor casing, blank production casing, screened production casing and discharge header and appurtenances by the Contractor shall be performed by certified welders utilizing materials, equipment and methods designed specifically to achieve the operations herein described. General requirements for qualification shall be in accordance with AWS D1.1, Sec. 5, Part A, Qualification. Welding procedures shall be qualified in accordance with AWS D1.1, Sec. 5, Part B, Procedure Qualifications. Welders shall be certified for all position welding of each separate procedure, listed herein, in accordance with AWS D1.1, Sec. 5, Parts C, D and E, Welder and Welding-Operator Qualifications. The Contractor shall provide a copy of the welder's current certification, welding procedure record and procedure qualification record prior to performing any welding covered by this contract, after issuance of the Notice to Proceed.

C. All welding shall be performed in strict accordance with the qualification procedures stated herein utilizing the shielded metal-arc welding process to achieve 100 percent full penetration welds. City reserves the option of performing non-destructive, normally sonic or visual examination methods of any welds performed. Examination of casing and liner welds by X-ray shall be limited to a maximum of four welds per well. Surfaces to be welded shall be free from scale, slag, heavy rust, grease, paint, cement, mud or any other foreign material. Joint surfaces shall be smooth, uniform and free from defects that adversely affect proper welding procedure. Surfaces that have been torch-cut or air-arc gouged shall be ground smooth to remove all loose slag and oxidation. Welding shall not be performed when the ambient temperature is less than 0°F or when the surfaces are wet from rain, snow, ice, fog, or during periods of high wind velocity, unless the welder and the work are properly and adequately protected from the elements. When the ambient temperature is 50°F or less, preheating of the joint to be welded is required. Preheating to a minimum of 100°F shall extend ahead of the advancing arc a minimum distance of four times the wall thickness on each side of the joint.

D. The welds shall be applied by means of continuous stringer beads or passes utilizing the shielded metal-arc welding process (SMAW). Welding procedures described herein require the use of the AWS electrode classification specified for each. Each pass shall be thoroughly cleaned and descaled by means of chipping and wire brushing or buff grinding before the succeeding pass is applied. The surface pass on groove welds shall be substantially central to the groove and shall be reasonably smooth and free from depressions. The final weld surface shall be free from all weld slag. Fillet welds shall have legs of equal size. The finished fillet weld must be free of grooves, deep valleys or ridges and

contain no abrupt changes in section at the toe. The face of fillet welds may be flat or slightly convex. Cracks in a groove or fillet weld and/or the base metal, incomplete fusion, weld overlap and pinholes are unacceptable. Arc strikes must be avoided. Any arc strikes will be repaired by grinding smooth. Defective welds will be repaired or replaced at no cost to City.

E. Butt joints shall be accurately aligned and retained in position for the welding operation by use of line-up clamps preferred or fit-up clips, minimum of four per joint equally spaced around the circumference of the pipe joint. The line-up clamps or fit-up clips shall not be removed prior to completion of at least the root pass. All weld splatter shall be removed by grinding smooth. Butt joints of any pipe diameter and similar or dissimilar materials shall be gapped a minimum of 1/16 inch and shall not exceed the 5/32-inch maximum. Inside penetration of any full penetration groove weld shall not exceed 1/8 inch. Surface cap build-up of any full penetration groove weld shall not exceed 5/32 inch.

F. The assembly of random lengths of all materials stacked vertically for installation downhole, after welding in the form of surface casing liner, blank liner and screen liner, shall be connected to achieve at least the tensile strength of the pipe by means of gapped horizontal groove welds. All groove welds shall be accomplished with a minimum of three weld passes, as herein described. For a similar metal procedure of welding carbon steel to carbon steel, the root (first) pass of the gapped groove (butt) joint shall be made with a 1/8-inch maximum diameter E7010-A1 electrode utilizing the drag technique. The hot (second) pass shall be made with a 5/32-inch maximum diameter E7010-A1 electrode utilizing the drag technique. The filling, capping and surface (third or more) pass shall be made with a 3/16-inch maximum diameter E7018 electrode utilizing the drag technique. Low hydrogen electrodes require the specific use of proper and adequate furnace type drying and holding facilities.

G. For a similar metal procedure of welding AISI Type 304 stainless steel to AISI Type 304 stainless steel, the root (first) pass of the gapped groove (butt) joint shall be made with a 5/32-inch maximum diameter E308-15 electrode utilizing the weaver technique. The hot (second) pass shall be made with a 5/32-inch maximum diameter E308-15 electrode utilizing the weaver technique. The filling, capping and surface (third or more) pass shall be made with a 3/16-inch maximum diameter E308-15 electrode utilizing the d rag technique. All specified requirements for either procedure of welding similar metals or the procedure of welding dissimilar metals is applicable to either operation except the use of electrodes.

H. For a dissimilar procedure of welding AISI Type 304 stainless steel to carbon steel, the root (first) pass of the gapped groove (butt) joint shall be made with a 5/32-inch maximum diameter E309-15 electrode utilizing the weaver technique. The hot (second) pass shall be made with a 5/32-inch maximum diameter E309-15 electrode utilizing the weaver technique. The filling, capping and surface

(third or more) pass shall be made with a 3/16-inch maximum diameter E309-15 electrode utilizing the drag technique.

I. The welding required for the installation of flanged outlets and the fabrication of random length steel pipe joints with weld neck flanges for discharge header modifications shall be accomplished utilizing vertical and horizontal, as required, fillet welds. All fillet welds shall be accomplished with a minimum of two weld passes, as herein described. Build-up per pass shall be a minimum of 3/16 inch and shall not exceed 1/4 inch maximum. For a similar metal procedure of welding carbon steel to carbon steel, the root (first) pass of the fillet weld shall be made with a 1/8-inch maximum diameter E7010-A1 electrode utilizing the drag technique. The filling, capping and surface (second or more) pass shall be made with a 3/16-inch maximum diameter E7018 electrode utilizing the drag technique.

J. All requirements for field welding of the various similar and dissimilar metal procedures, as described herein, shall apply to all shop welding for fabrication of components prior to delivery to the field for assembly and installation. The Contractor may elect to utilize the gas tungsten arc (TIG) welding process for any shop welding of components fabrication, provided the welder and the welding procedure are fully certified, as herein specified. The TIG welding process may be used for the root pass of any shop weld with additional passes made utilizing other approved welding processes. If the TIG welding process is not used for the root pass of any such shop weld, no additional passes of the weld can be made utilizing the TIG process.

K. The Contractor shall submit to City for review the welding methods and procedure(s) the Contractor plans to use for field welding of the conductor casing, blank production casing, screened production casing, discharge header, and appurtenances. The description of the welding procedures shall state the conditions under which the welding will be performed, the type and size of welding rods to be utilized , the minimum number of passes required to weld the various wall thicknesses of casing, liner or pipe, and the method that will be used to remove weld splatter from surfaces to be welded . The method for keeping butt joints accurately aligned during welding operations shall be described. Any other questions by City shall be answered. The welding methods and procedures submitted by the Contractor shall be reviewed and must be acceptable to City prior to the Contractor performing any field welding required herein.

3.05 PROGRESS REPORT

A. City shall be provided with two copies of each driller's or foreman's tour report on the work contained in this contract. These tour reports shall be delivered to City's representative each day for that day's progress. The form of the tour progress report shall be approved by the City. All data pertaining to progress of the work,

such as drilling depth, formation descriptions, materials received, tallies of materials installed during construction work, development time, waiting time, and time spent on repairs, shall be recorded accurately on these reports during each tour. Each tour report shall be prepared and signed by the Contractor's foreman in charge of the tour reporting. A "tour" is defined for the purpose of tour reports as the period of time a driller or foreman and crew work continuously without interruption.

Daily reports listing the personnel working at the site, number of hours worked per person, equipment used at the site, and a description of the work performed shall also be prepared by subcontractors working on the project. The form of the daily reports shall be submitted to the City for approval. These reports shall be delivered to the City's representative each day for that day's progress.

3.06 DAILY REPORT

A. The Contractor shall report plans and progress to City's designated representatives approximately 24 hours before work is to be started and daily thereafter during the course of the work. If City's representative is at the well site, the daily report may be made in person. Otherwise, the report is to be made by telephone.

3.07 CLEAN UP

A. Contractor shall clean all road surfaces to the well site at least on a weekly basis.

B. Upon completion of the work at each site, the Contractor shall clear the construction site of all trash, rubbish, sand and other materials bailed or pumped from the well, temporary structures, and other temporary excavations to the original conditions, grade the entire site to City's satisfaction, hydro mulch seed the construction area, and replace and plant landscape plants removed during drilling.

3.08 ADDITIONAL REQUIREMENTS FOR SUBSTANTIAL COMPLETION

A. Contractor shall complete an Excel spreadsheet, provided by the City, that describes the items installed at the project site. The information shall include the manufacturer, model, serial number, year built, service life and original cost.

ATTACHMENT A

SECURITY REQUIREMENTS FOR ALL PUD SITES

Security Requirements:

The Contractor agrees to strictly abide by all security and safety regulations issued by the City as stated below.

All Contractor employees and subcontractors must be a U.S. Citizen or have a legal work permit. Each person must also present a valid unexpired U.S. state driver's license or photo identification card. A U.S. issued resident alien card, with photo, passport, or other U.S. state or U.S. federal photo documentation is acceptable to present for identification purposes. It is the responsibility of the Contractor to immediately inform the COH of any personnel changes.

The COH/Public Utilities Division (PUD) Security Group will also conduct a criminal background check (at no cost to the Contractor) on all contractor and subcontractor employees assigned to work at any PUD site. The Contractor shall contact during normal business hours (8:00 am to 5:00 pm, M-F) one of the following PUD representatives identified below to coordinate completion of criminal background checks.

Tammy Spriggs, 832-395-5175
Shandra Jones, 832-395-5179

The Contractor shall agree to completion of the City's Disclosure and Consent for Release of Information and any other documentation necessary to complete criminal background checks.

Each employee of the Contractor and its subcontractors will be required to apply for, and receive, a COH identification card/access badge (at no cost to the Contractor) before being granted access to any PUD work site. The COH photo identification office is located at 611 Walker Street in Houston, Texas on the 3rd floor of the annex (832.395.5175 phone 832.395.5187 fax). Identification cards / access badges will only be issued by the City once a background check has been completed for the Contractor or subcontractor employee, and clearance has been granted by the City.

All Contractor employees without current identification cards will be stopped by COH employees and/or security personnel and will not be given access to any COH/PUD facility. All construction employees must show a valid identification card at the entrance gate and upon request while working on site.

Contract employees must present their card to enter and exit the site at the guard shack. Lost cards are disabled and replacement cost is $5.00.

VEHICLES BELONGING TO CONTRACT EMPLOYEES AND THEIR SUBS:
Vehicles that are required in the performance of a contractor's job duties (welding truck, flat bed, etc.) will be allowed to operate freely on the plant site, but with the following conditions:
(1) They must have identification with the company's name and a phone number, along with the company's insignia, so that the operator's identity may be verified. The sign must be no smaller than 12 inches tall by 12 inches wide; (2) The employee agrees to adhere to all of the posted speed limits and parking restrictions, which include but are not limited to parking on the grass or on curbs, or leaving vehicles unattended in heavily trafficked areas.

CONTRACT EMPLOYEES AND THEIR SUBS:
a. Contractors and/or Subs that will be working on any PUD site for less than 60 days will not be issued a City of Houston Contractor badge. However, they must still pass a criminal check and wear a Photo ID issued by their company (A picture ID displaying their name, the company's name, logo, and the position they hold within the organization) along with having their state issued unexpired driver's license or ID.

b. Contractors and/or Subs that will be working on any PUD site for over 60 days will be issued a City of Houston Contractor badge with their picture after they pass a criminal check. They must also have in their possession their unexpired state issued driver's license or ID.

In addition, they must have a valid **Texas Driver's License** on their person at all times. (A valid **US** driver's license will be accepted only if the employee does not reside in Texas.)

c. Badges shall be worn in a clearly visible area on the employee's person. Badges may **not** be kept in a wallet or pocket of any sort.

d. Construction/Contract Management is responsible for providing security a monthly updated list of all employees (contractors and subs).

Enforcement:
No contract employee will be allowed to enter the facility without **both** badges in their possession. Any contract employee found on the plant site without proper identification will be immediately escorted off the property by HPD. In addition, construction management will issue a non-compliance letter to the contractor responsible. Furthermore, the City will not allow contract employees conditional access pending the arrival of requested badges. **If an employee does not have proper identification, he/she should not be allowed to report to duty at any PUD site.**
All General Contractors/Sub Contractors and their employees will be held accountable for the return of ALL City issued badges of their employees and subcontractor employees. Criminal charges may be filed in an effort to recover the outstanding badges.

END OF SECTION

Section 01145

USE OF PREMISES

1.01 SECTION INCLUDES

A. General use of the site including properties inside and outside of rights-of-way, work affecting road, ramps, streets and driveways and notification to adjacent occupants.

1.02 RIGHTS-OF-WAY

A. Confine access, and operations and storage areas to rights-of-way provided by the City as stipulated in Document 00700 - General Conditions; trespassing on abutting lands or other lands in the area is not allowed.

B. Make arrangements, at no cost to the City, for temporary use of private properties. Contractor and Surety shall indemnify and hold harmless the City against claims or demands arising from such use of properties outside of rights-of-way. Submit a copy of agreements between private property owners and Contractor prior to use of the area. Agreements between private property owners and Contractor shall be notarized or bear the signatures of two witnesses.

C. Obtain written permission from City of Houston Parks and Recreation Department for storage of materials on esplanades and other areas within rights-of-way under that department's jurisdiction. Submit copies of written permission prior to use of the area.

D. Restrict total length of distributed materials along the route of construction to 1,000 linear feet unless otherwise approved in writing by City Engineer.

1.03 PROPERTIES OUTSIDE OF RIGHTS-OF-WAY

A. Do not alter the condition of properties adjacent to and along rights-of-way.

B. Do not use ways, means, methods, techniques, sequences, or procedures that result in damage to properties or improvements.

C. Restore damaged properties outside of rights-of-ways at no cost to the city

1.04 USE OF SITE

A. Obtain approvals from governing authorities prior to impeding or closing public roads and streets. Do not close more than two consecutive intersections at one time.

B. Notify Project Manager and Public Works and Engineering Traffic Management Branch at least five working days prior to closing a street or street crossing. Obtain permits for street closures in advance.

C. Maintain 10-foot-wide minimum access lanes for emergency vehicles including access to fire hydrants.

D. Avoid obstructing drainage ditches or inlets. When obstruction is unavoidable due to requirements of the Work, provide grading and temporary drainage structures to maintain unimpeded flow.

E. Locate and protect private lawn sprinkler systems that may exist within the site. Repair or replace damaged systems to condition existing at start of the Work, or better. Test irrigation system prior to construction.

F. Conform to daily clean-up requirements of Article 3 of Document 00700 - General Conditions.

G. Beware of overhead power lines existing in area and in close proximity of the Project. When 10 feet of clearance between energized overhead power line and construction-related activity cannot be maintained, request Center Point Energy (CPE) de-energize or move conflicting overhead power line. Contact CPE representatives at (713) 207-2222. Schedule, coordinate and pay costs associated with de-energizing or moving conflicting overhead power lines. When there is no separate pay item for this effort, include these costs in various items of bid that make such work necessary.

1.05 NOTIFICATION TO ADJACENT OCCUPANTS

A. Notify individual occupants in areas to be effected by the Work of proposed construction and time schedule. Notify not less than 72 hours or more than two weeks prior to work performed within 200 feet of homes or businesses. Follow form and content of sample door hanger provided by Project Manager.

B. Include in notification nature of the Work, and names and telephone numbers of two company representatives for resident contact available on 24-hour call.

C. Submit proposed notification to Project Manager for approval. Consider ethnicity of the neighborhood where English is not the dominant language. Provide notice in an understandable language.

1.06 PUBLIC, TEMPORARY, AND CONSTRUCTION ROADS AND RAMPS

A. Construct and maintain temporary detours, ramps, and roads to provide for normal public traffic flow when it is necessary to close public roads or streets.

B. Provide mats or other means to prevent overloading or damage to existing roadways from tracked equipment, large tandem axle trucks or equipment that will damage the existing roadway surfaces.

C. Construct and maintain access roads and parking areas as specified in Section 01504 - Temporary Facilities and Controls.

1.07 EXCAVATION IN STREETS AND DRIVEWAYS

A. Avoid hindering or inconveniencing public travel on streets or intersecting alleys for more than two blocks at any one time, except by permission of City Engineer.

B. Obtain Traffic Management Branch and City Engineer's approval when nature of the Work requires closure of an entire street. Permits required for street closure are Contractor's responsibility. Avoid unnecessary inconvenience to abutting property owners.

C. Remove surplus materials and debris and open each block for public use, as work in that block is complete.

D. Acceptance of any portion of the Work will not be based on return of street to public use.

E. Avoid obstructing driveways or entrances to private property.

F. Provide temporary crossings or complete excavation and backfill in one continuous operation to minimize duration of obstruction when excavation is required across drives or entrances.

G. Provide barricades and signs in accordance with Section VI of the State of Texas Manual on Uniform Traffic Control Devices.

1.08 TRAFFIC CONTROL

A. Comply with traffic regulation as specified in Section 01555 - Traffic Control and Regulation.

1.09 SURFACE RESTORATION

A. Restore the site including landscaping to the condition existing before construction, or better.

B. Repair paved areas per the requirements of Section 02951 - Pavement Repair and restoration.

C. Repair damaged turf areas, level with bank run sand conforming to Section 02317 - Excavation and Backfill for Utilities, or topsoil conforming to Section 02911 - Topsoil, and re-sod in accordance with Section 02922 - Sodding. Water and level newly sodded areas with adjoining turf using appropriate steel wheel rollers for sodding. Do not use spot sodding or sprigging.

1.10 LIMITS OF CONSTRUCTION

A. Confine operations to lands within construction work limits shown on Drawings. Unless otherwise noted on Drawings adhere to the following:

1. Where utility alignment is within esplanade, and construction limits are shown on Drawings to extend to edge of esplanade, keep equipment, materials, stockpiles a minimum of five feet from back of curb.

2. Where construction limits shown on Drawings extend to property line, keep sidewalks free of equipment, materials, and stockpiles.

1.11 EQUIPMENT AND MATERIAL SALVAGE

A. Upon completion of the Work, carefully remove salvageable equipment and material. Deliver them to City of Houston as directed by Project Manager. Dispose of equipment offsite at no additional cost to the City when Project Manager deems equipment unfit for further use.

PART 2 P R O D U C T S - Not Used

PART 3 E X E C U T I O N - Not Used

END OF SECTION

Section 01255

CHANGE ORDER PROCEDURES

PART 1 G E N E R A L

1.01 SECTION INCLUDES

A. Procedures for processing Change Orders, including:

1. Assignment of a responsible individual for approval and communication of changes in the Work;

2. Documentation of change in Contract Price and Contract Time;

3. Change procedures, using proposals and Modifications;

4. Execution of Change Orders;

5. Correlation of Contractor submittals.

1.02 REFERENCES

A. Blue Book is defined as the Rental Rate Blue Book for Construction Equipment (a.k.a. Data Quest Blue Book).

B. Rental Rate is defined as the full-unadjusted base rental rate for the appropriate item of construction equipment.

1.03 RESPONSIBLE INDIVIDUAL

A. Provide a letter indicating the name and address of the individual authorized to execute Modifications, and who will be responsible for informing others in Contractor's employ and Subcontractors of changes to the Work. Provide this information at the pre-construction meeting.

1.04 DOCUMENTATION OF CHANGE IN CONTRACT PRICE AND CONTRACT TIME

A. Maintain detailed records of changes in the Work. Provide full information required for identification and evaluation of proposed changes, and substantiate costs of changes in the Work.

B. Document each proposal for change in Contract Price or Contract Time with sufficient data to allow evaluation of proposal.

C. Include the following minimum information on proposals:

1. Quantities of items in original Document 00410 – Bid Form with additions, reductions, deletions, and substitutions.

2. Quantities and cost of items in original Schedule of Values with additions, reductions, deletions and substitutions.

3. Provide Unit Prices for new items, with supporting information, for inclusion in Schedule of Unit Price Work.

4. Justification for changes in Contract Time.

5. Additional data upon request.

D. For changes in the Work performed on a time-and-material basis, provide the following additional information:

1. Quantities and description of Products.

2. Taxes, insurance and Bonds.

3. Overhead and profit as noted in Document 00700 - General Conditions.

4. Dates, times and by who work was performed.

5. Time records and certified copies of applicable payrolls.

6. Invoices and receipts for Products, rental equipment, and subcontracts, similarly documented.

E. For changes in the Work performed on a time-and-materials basis, rental equipment is paid as follows:

1. Actual invoice cost for duration of time required to complete extra work without markup for overhead and profit. When extra work comprises only a portion of a rental invoice where equipment would otherwise be on site, compute hourly equipment rate by dividing the actual monthly invoice by 176. One day equals eight hours and one week equals 40 hours.

2. Do not exceed estimated operating costs given in Blue Book for items of equipment. Overhead and profit will be allowed on the operating cost.

F. For changes in the Work performed on a time-and-materials basis using Contractor-owned equipment, use Blue Book rates as follows:

1. Contractor-owned equipment will be paid at the Blue Book Rental Rate for the duration of time required to complete extra work without markup for overhead and profit. Utilize lowest cost combination of hourly, daily, weekly or monthly rates. Use 150 percent of Rental Rate for double shifts, one extra shift per day, and 200 percent of Rental Rate for more than two shifts per day. Standby rates shall be 50 percent of the appropriate Rental Rate shown in Blue Book. No other rate adjustments apply.

2. Do not exceed estimated operating costs given in Blue Book. Overhead and profit will be allowed on operating costs. Operating costs will not be allowed for equipment on standby.

1.05 CHANGE PROCEDURES

A. Changes to Contract Price or Contract Time can only be made by issuance of Document 00941 - Change Order. Issuance of Document 00940 - Work Change Directive will be formalized into a Change Order. Changes will be in accordance with requirements of Document 00700 - General Conditions.

B. City Engineer will advise of Minor Changes in the Work as authorized by the Document 00700 - General Conditions by issuing Document 00942 – Minor Change.

C. Request clarification of Drawings, Specifications, Contract documents or other information by using Document 00931- Request for Information. Response by Project Manager to Requests for Information does not authorize Contractor to perform tasks outside scope of the Work. Changes must be authorized as described in this Section.

1.06 PROPOSALS AND CONTRACT MODIFICATIONS

A. Project Manager may issue Document 00932- Request for Proposal, which includes a detailed description of the proposed change with supplementary or revised Drawings and Specifications. Project Manager may also request a proposal in response to a Request for Information. Prepare and submit the proposal within seven days or as specified in request.

B. Submit requests for Contract changes to City Engineer describing proposed change and its full effect on the Work, with a statement describing reason for change and effect on Contract Price and Contract Time including full documentation.

C. Design Consultant may review Change Orders.

1.07 WORK CHANGE DIRECTIVE

A. City Engineer may issue a signed Work Change Directive instructing Contractor to proceed with a change in the Work. Work Change Directive will subsequently be incorporated into a Change Order.

B. Work Change Directives will describe changes in the Work and designate the method of determining change in Contract Price or Contract Time.

C. Proceed promptly to execute changes in the Work in accordance with the Work Change Directive.

1.08 STIPULATED PRICE CHANGE ORDER

A. A Stipulated Price Change Order will be based on an accepted proposal.

1.09 UNIT PRICE CHANGE ORDER

A. Where Unit Prices for affected items of the Work are included in Document 00410 – Bid Form, the Change Order will be based on Unit Prices, subject to Articles 7 and 9 of Document 00700 - General Conditions.

B. Where Unit Prices of the Work are not pre-determined in Document 00410-Bid Form, the Work Change Directive or accepted proposal will specify the Unit Prices to be used.

1.10 TIME-AND-MATERIAL CHANGE ORDER

A. Provide itemized account and supporting data after completion of change, within time limits indicated for claims in Document 00700 - General Conditions.

B. City Engineer will determine the change allowable in Contract Price and Contract Time as provided in Document 00700 - General Conditions.

C. Maintain detailed records for work done on time-and-material basis as specified in Paragraph 1.04 above.

D. Provide full information required for evaluation of changes and substantiate costs for changes in the Work.

1.11 EXECUTION OF CHANGE DOCUMENTATION

A. City Engineer will issue Change Orders, Work Change Directives, or Minor Change in the Work for signatures of Parties as described in Document 00700 - General Conditions.

1.12 CORRELATION OF CONTRACTOR SUBMITTALS

A. For Stipulated Price Contracts, promptly revise Schedule of Values and Application for Payment forms to record authorized Change Orders as separate line item.

B. For Unit Price Contracts, the next monthly estimate of the Work after acceptance of a Change Order will be revised to include new items not previously included with appropriate Unit Prices.

C. Promptly revise progress schedules to reflect change in Contract Time, and to adjust time for other items of work affected by the change, and resubmit for review.

D. Promptly enter changes to on-site and record copies of Drawings, Specifications or Contract documents as required in Section 01785 - Project Record Documents.

PART 2 P R O D U C T S - Not Used

PART 3 E X E C U T I O N - Not Used

END OF SECTION

SUPPLEMENTARY SPECIFICATION

Section 01270 S

MEASUREMENT AND PAYMENT

The following supplement modifies Specification Section 01270. Where a portion of the Specification is modified or deleted by this supplementary specification, the unaltered portions of the specification shall remain in effect.

1. Add the following to 1.02:

   E. Payment for all unit price items and unit of measure shall be defined in the unit price tables in Section 00410.

2. Delete paragraph 1.05 D. and replace it with the following:

   D. Progress payments where applicable will be based on the City Engineer's observations and evaluations of quantities incorporated in the Work multiplied by the unit price. Once a decision is made to construct a well, a progress payment of $105,000.00 for Item 2 in Document 00410 - Bid Form will be made for the successful completion, including geophysical logging, of the pilot hole for each well and no additional progress payments will be made for the water well construction until the well meets the performance requirements in subsections 3.05 and 3.06 of Section 02529 - Water Wells.

3. Add the following to 1.05:

   F. Progress payments for lump sum items other than water well construction will be based on percent of completion as determined by the City Engineer's evaluations.

END OF SUPPLEMENT

Approved By:

Sonny Do, P.E.
Acting Assistant Director
Water Engineering Section
Engineering and Construction Division

11/24/15
Date

Section 01270

MEASUREMENT AND PAYMENT

PART 1 GENERAL

1.01 SECTION INCLUDES

A. Procedures for measurement and payment plus conditions for nonconformance assessment and nonpayment for rejected Products.

1.02 AUTHORITY

A. Measurement methods delineated in Specification sections are intended to complement criteria of this Section. In event of conflict, requirements of the Specification section shall govern.

B. Project Manager will take all measurements and compute quantities accordingly.

C. Assist by providing necessary equipment, workers, and survey personnel.

D. Measurement and Payment paragraphs are included only in those Specification sections of Division 01 where direct payment will be made. Include costs in the total bid price for those Specification sections in Division 01 that do not contain Measurement and Payment paragraphs,

1.03 UNIT QUANTITIES SPECIFIED

A. Quantity and measurement estimates stated in the Agreement are for contract purposes only. Quantities and measurements supplied or placed in the Work and verified by Project Manager will determine payment as stated in Article 9 of Document 00700 - General Conditions.

B. When actual work requires greater or lesser quantities than those quantities indicated in Document 00410 – Bid Form, provide required quantities at Unit Prices contracted, except as otherwise stated in Article 9 of Document 00700 - General Conditions.

1.04 MEASUREMENT OF QUANTITIES

A. Measurement by Weight: Reinforcing steel, rolled or formed steel or other metal shapes are measured by CRSI or AISC Manual of Steel Construction weights. Welded assemblies are measured by CRSI or AISC Manual of Steel Construction or scale weights.

B. Measurement by Volume:

1. Stockpiles: Measured by cubic dimension using mean length, width, and height or thickness.

2. Excavation and Embankment Materials: Measured by cubic dimension using average end area method.

C. Measurement by Area: Measured by square dimension using mean length and width or radius.

D. Linear Measurement: Measured by linear dimension, at item centerline or mean chord.

E. Stipulated Price Measurement: By unit designated in the Agreement.

F. Other: Items measured by weight, volume, area, or linear means or combination, as appropriate, as completed item or unit of the Work.

G. Measurement by Each: Measured by each instance or item provided.

H. Measurement by Lump Sum: Measure includes all associated work.

05 PAYMENT

A. Payment includes full compensation for all required supervision, labor, Products, tools, equipment, plant, transportation, services, and incidentals; and erection, application or Installation of an item of the Work; and Contractor's overhead and profit.

B. Total compensation for required Unit Price work shall be included in Unit Price bid in Document 00410 – Bid Form. Claims for payment as Unit Price work, but not specifically covered in the list of Unit Prices contained in Document 00410 – Bid Form, will not be accepted.

C. Interim payments for stored materials will be made only for materials to be incorporated under items covered in Unit Prices, unless disallowed in Document 00800 - Supplementary Conditions.

D. Progress payments will be based on Project Manager's observations and evaluations of quantities incorporated in the Work multiplied by Unit Price.

E. Final payment for work governed by Unit Prices will be made on the basis of actual measurements and quantities determined by Project Manager multiplied by the Unit Price for work which is incorporated in or made necessary by the Work.

1.06 NONCONFORMANCE ASSESSMENT

A. Remove and replace work, or portions of the Work, not conforming to the Contract documents.

B. When not practical to remove and replace work, City Engineer will direct one of the following remedies:

1. Nonconforming work will remain as is, but Unit Price will be adjusted lower at discretion of City Engineer.

2. Nonconforming work will be modified as authorized by City Engineer, and the Unit Price will be adjusted lower at the discretion of City Engineer, when modified work is deemed less suitable than specified.

C. Specification sections may modify the above remedies or may identify a specific formula or percentage price reduction.

D. Authority of City Engineer to assess nonconforming work and identify payment adjustment is final.

1.07 NONPAYMENT FOR REJECTED PRODUCTS

A. Payment will not be made for any of the following:

1. Products wasted or disposed of in an unacceptable manner.

2. Products determined as nonconforming before or after placement.

3. Products not completely unloaded from transporting vehicles.

4. Products placed beyond lines and levels of required work.

5. Products remaining on hand after completion of the Work, unless specified otherwise.

6. Loading, hauling, and disposing of rejected Products.

PART 2 P R O D U C T S - Not Used

PART 3 E X E C U T I O N - Not Used

END OF SECTION

Section 01292

SCHEDULE OF VALUES

PART 1 GENERAL

1.01 SECTION INCLUDES

A. Preparation and submittal of Schedule of Values for Stipulated Price Contracts or for Major Unit Price Work on Unit Price Contracts.

1.02 PREPARATION

A. For Stipulated Price Contracts, subdivide the Schedule of Values into logical portions of the Work, such as major work items or work in contiguous construction areas. Use Section 01325 - Construction Schedule as a guide to subdivision of work items. Directly correlate Items in the Schedule of Values with tasks in the Construction Schedule. Organize each portion using the Project Manual Table of Contents as an outline for listing value of the Work by Sections. A pro rata share of mobilization, Bonds, and insurance may be listed as separate items for each portion of the Work.

B. For Unit Price Contracts, items should include a proportional share of Contractor's overhead and profit so that total of all items will equal Contract Price.

C. For lump sum equipment items, where submittal of operation and maintenance data and testing are required, include separate items for equipment operation and maintenance data where:

1. submittal of maintenance data is valued at five percent of the lump sum amount for each equipment item and

2. submittal for testing and adjusting is valued at five percent of the lump sum amount for each equipment item.

Round off figures for each item listed to the nearest $100. Set the value of one item, when necessary, to make total of all values equal the Contract Price for Stipulated Price Contracts or the lump sum amount for Unit Price Work.

03 SUBMITTAL

A. Submit the Schedule of Values, in accordance with requirements of Section 01330 - Submittal Procedures, at least 10 days prior to processing of the first Certificate for Payment.

B Submit the Schedule of Values in an approved electronic spreadsheet file and an 81/2-inch by 11-inch print on white bond paper.

C. Revise Schedule of Values for items affected by Contract Modifications. After City Engineer has reviewed changes, resubmit at least 10 days prior to the next scheduled Certificate for Payment date.

PART 2 P R O D U C T S - Not Used

PART 3 E X E C U T I O N - Not Used

END OF SECTION

Section 01312

COORDINATION AND MEETINGS

PART 1 G E N E R A L

1.01 SECTION INCLUDES

A. General coordination including pre-construction meeting, site mobilization conference, and progress meetings.

1.02 COORDINATION OF DOCUMENTS

A. Coordination is required throughout documents. Refer to Contract documents and coordinate as necessary.

1.03 CONTRACTOR COORDINATION

A. Coordinate scheduling, submittals, and work of various Specification sections to assure efficient and orderly sequence of Installation of interdependent construction elements.

B. Coordinate completion and clean up of the Work prior to the Date of Substantial Completion and for portions of the Work designated for City's partial occupancy.

C. Coordinate access to the site for correction of nonconforming work to minimize disruption of the City's activities where the City is in partial occupancy.

1.04 PRE-CONSTRUCTION MEETING

A. Project Manager will schedule pre-construction meeting.

B. Attendance Required: City representatives, Design Consultant, special consultants as required by Project Manager, Contractor, and major Subcontractors and Suppliers.

C. Agenda:

1. Distribution of Contract documents.

2. Designation of personnel representing the Parties and Design Consultant.

3. Review of insurance.

4. Discussion of formats for Schedule of Values and Construction Schedule.

5. Procedures and processing of Shop Drawings, substitutions, pay estimates or Applications for Payment, Requests for Information, Requests for Proposal, Modifications, and the Contract closeout, other submittals.

6. Scheduling of the Work and coordination with other contractors.

7. Review of Subcontractors and Suppliers.

8. Appropriate agenda items listed for the site mobilization conference, Paragraph 1.05.C, when pre-construction meeting and site mobilization conference are combined.

9. Procedures for testing.

10. Procedures for maintaining record documents.

1.05 SITE MOBILIZATION CONFERENCE

A. When required by Contract documents, Project Manager will schedule a conference at the Project site prior to Contractor mobilization.

B. Attendance Required: City representatives, Design Consultant, special consultants, Superintendent, and major Subcontractors.

C. Agenda:

1. Use of premises by the City and Contractor.

2. Safety and first aid procedures.

3. Construction controls provided by the City.

4. Temporary utilities.

5. Survey and layout.

6. Security and housekeeping procedures.

7. Field office requirements.

1.06 PROGRESS MEETINGS

A. Hold meetings at Project field office or other location designated by Project Manager. Hold meetings at monthly intervals, or more frequently when directed by Project Manager.

B. Attendance Required: Superintendent, major Subcontractors and Suppliers, City representatives, Design Consultant and its subconsultants as appropriate for agenda topics for each meeting.

C. Project Manager will make arrangements for meetings, and for recording minutes.

D. Project Manager will prepare the agenda and preside at meetings.

E. Provide required information and be prepared to discuss each agenda item.

F. Agenda:

1. Review minutes of previous meetings.
2. Review of construction schedule, pay estimates, cash flow curve, payroll and compliance submittals.
3. Field observations, problems, and necessary decisions.
4. Identification of problems that impede planned progress.
5. Review of submittal schedule and status of submittals.
6. Review of RFI and RFP status.
7. Modification status.
8. Review of off-site fabrication and delivery schedules.
9. Maintenance of Construction Schedule.
10. Corrective measures to regain Construction Schedule.
11. Planned progress during the succeeding work period.
12. Coordination of projected progress.
13. Maintenance of quality and work standards.

14. Effect of proposed Modifications on Construction Schedule and coordination.

15. Review Project Record Contract Drawings.

16. Other item relating to the Work.

PART 2 P R O D U C T S - Not Used

PART 3 E X E C U T I O N - Not Used

END OF SECTION

Section 01321

CONSTRUCTION PHOTOGRAPHS

PART 1 GENERAL

1.01 SECTION INCLUDES

A. Photographic requirements for construction photographs and submittals.

1.02 DEFINITIONS

A. Pre-construction Photographs: Photographs taken, in sufficient numbers and detail, prior to Date of Commencement of the Work, to show original construction site conditions.

B. Progress Photographs: Photographs, taken throughout the duration of construction at regular intervals and from fixed vantage points, pre-approved by the City, that document progress of the Work.

C. Finished Photographs: Photographs, taken by a professional photographer near Date of Substantial Completion and before City Council's acceptance of the Work, that are suitable for framing and for use in brochures or on the Internet

1.03 SUBMITTALS

A. Refer to Section 01330, Submittal Procedures, for submittal requirements.

B. Format and Media. Film or digital photography may be used. Submit color photographs, unless otherwise specified.

1. Prints. Submit each Progress or Pre-construction Photograph print in a three-hole plastic pocket or sleeve, bound in a three-ring notebook. Produce prints on photographic-quality paper approved by Project Manager. Minimum size for Pre-construction Photograph prints shall be 3-inches by 5-inches. Progress Photograph prints shall be 8-inches by 10-inches.

2. Film. Use 35mm or larger color film. Submit negatives used to make submitted photographs, in 3-hole 8-1/2 inch by 11-inch plastic sheets with sleeves for negatives.

3. Digital Photography. Use 2.1 megapixel density or greater for photographs. Scanned photographs must equal or exceed 400 dots

per inch when scanned from 8-inch by 10-inch prints. Submit digital photographic files on computer disks. Format disks for MS-DOS (Microsoft Disk Operating System) filing system and in JPEG (Joint Photographic Experts Group) format.

C. Submittal Quantities and Frequencies.

1. Pre-construction Photographs:
   a. For Stipulated Price Contracts, submit two sets of Pre-construction Photographs, if required, prior to first Application for Payment.
   b. For Unit Price Contracts, submit two sets of Pre-construction Photographs prior to start of construction operations.

2. Progress Photographs:
   a. For Stipulated Price Contracts, submit three sets of Progress Photographs with each Application for Payment at the times established for submittal of Applications for Payment. Monthly Applications for Payment shall be deemed incomplete if not accompanied by the required Progress Photographs. Contractor's failure or election to not submit a monthly Application for Payment shall not affect the requirement for monthly Progress Photographs.
   b. Progress Photographs are not required for Unit Price Contracts unless otherwise specified.

3. Finished Photographs: For Stipulated Price Contracts submit two sets of Finished Photographs, if required, after Date of Substantial Completion and prior to final payment. Each set shall contain one 11-inch by 14-inch matte finish color photographic print from each of the two vantage points pre-approved by the City. Vantage points for Finished Photographs will be approved separately from vantage points approved for Progress Photographs. Finished Photographs are not required for Unit Price Contracts unless otherwise specified.

D. Labeling. Place a label on the back of each photographic print, applied so as to not to show through on the front. Labels shall contain the following information:

1. Name of Project, address of Project and GFS Number.

2. Name and address of Contractor.

3. Date photograph was taken.

4. Location photo was taken from and short description of photo subject.

5. Name and address of professional photographer who took the photograph, if applicable.

E. Hand-deliver or transmit prints in standard photographic mailers marked "Photographs - Do Not Bend".

F. Photographic prints, negatives, photographic files and disks become the property of the City. Do not be publish photographs without written consent by the City.

1.04 QUALITY ASSURANCE

A. Contractor shall be responsible for the quality of and timely execution and submittal of photographs.

B. For Finished Photographs, Contractor shall use a professional photographer, with five years minimum professional experience in the Houston area. Contractor shall submit name, address and credentials of professional photographer for Project Manager's review and approval.

PART 2 PRODUCTS - Not Used

PART 3 EXECUTION

3.01 PRE-CONSTRUCTION PHOTOGRAPHS

A. Prior to commencement of construction operations, photograph the site to include initial construction corridor, detour routes, and staging or storage areas.

1. For Stipulated Price Contracts, unless specified as a requirement in other Sections, these photographs are optional for Contractor, but are highly recommended for areas bounded by other property owners.

2. Pre-construction photographs are required for Unit Price Contracts. For line projects with scheduled construction segments, take Pre-construction Photographs prior to commencement of work on each segment.

B. Prepare Pre-construction Photographs as follows:

1. Show the following information on a non-reflective chalkboard placed within the picture frame:
   a. Job number.
   b. Project Number.
   c. Date and time photographs were taken (Automatic date/time in negative is acceptable).
   d. Baseline station, direction of view (i.e. N, S, NW, etc.) and house number or street address and street name.

2. Pre-construction Photographs shall indicate condition of the following:
   a. Esplanades and boulevards.
   b. Yards (near side and far side of street).
   c. House walks and sidewalks.
   d. Curbs.
   e. Areas between walks and curbs.
   f. Particular features (e.g. yard lights, shrubs, fences, trees).

3. Show date photographs were taken on negatives.

C. Show the location of vantage points and direction of shots on a key plan of the site.

3.02 PROGRESS PHOTOGRAPHS

A. Progress Photographs document monthly advancement of the Work. Select vantage points for each shot so as to best show status of construction and progress since last photograph submittal. Select camera stations that will require little or no movement or adjustment over the duration of construction.

B. Take monthly Progress Photographs at regular intervals to coincide with cutoff dates associated with each Application for Payment.

3.03 FINISHED PHOTOGRAPHS

A. Finished Photographs shall be "staged" and taken by a professional photographer to depict the most flattering images of a finished facility. Two vantage points, from which Finished Photographs will be taken, shall be agreed to in advance by the City. Photographer shall consider lighting, time of day, height of eye, landscaping and placement of vehicles, people and other props in each picture. Filters and post-photography processing may be utilized to achieve a finished product acceptable to the City.

3.04 LOCATION

A. Vantage points, times and conditions for camera stations and photography for Progress and Finished Photographs shall be mutually agreed upon by the City, Contractor and Photographer. Progress Photograph vantage points may be changed by mutual agreement as the Work progresses, at no additional cost to the City.

END OF SECTION

Section 01326

CONSTRUCTION SCHEDULE (BAR CHART)

PART 1 G E N E R A L

1.01 SECTION INCLUDES

A. Provide an initial Construction Schedule as required by this section for the Work. Do not start construction until Project Manager reviews the schedule.

1.02 FORM AND CONTENT OF INITIAL CONSTRUCTION SCHEDULE

A. Bar Chart:

1. Show major construction activities such as pipe laying, by traffic control phases or other approved key areas; tunnel construction, pavement removal, pavement replacement, pressure testing, chlorination, clean up and punch list as separate activities on the schedule.

2. Show week duration for each activity.

3. Show separate activities for each Shop Drawing and Product Data submittal critical to timely completion. Show submittal dates and dates Project Manager needs to provide approved submittals.

4. Provide separate horizontal bar for each activity. List start and finish date for each activity at left side of diagram.

5. Horizontal Time Scale: Identify first work day of each week.

6. Scale and Spacing: Notes must be legible. Allow space for notations and future revisions.

7. Order of Listings: Order bar chart listings by phases or other approved groups of activities that are contiguous. List activities in chronological order within each phase or group.

B. Narrative Description:

1. Submit narrative descriptions of anticipated work sequences as indicated by the sequence of activities presented in the schedule.

2. Discuss any activity that affects the public (such as phases of traffic control), interaction with specific forces of the City (such as valve operation, chlorination and testing) or other associated contractors.

1.03 PROGRESS REVISIONS

A. Submit progress revisions or necessary information to complete and process Payment Applications. When required, re-submittals for rejected revisions must be submitted and reviewed prior to the following month's processing of a Payment Application. The following month's Payment Application will not be processed until the re-submittal is reviewed and required progress revisions are received.

B. Provide a narrative report to describe:

1. Major changes in scope.

2. Revised projections in progress, completion, or changes in activity duration.

3. Other identifiable changes.

4. Problem areas, anticipated delays, and the impact on schedule.

5. Corrective action recommended and its effect.

6. Effect of changes on schedules or other contractors.

7. Product delivery lead times.

C. Include additional data with Bar Chart described in Paragraph 1.03A of this Section:

1. Show original dates for each activity in the approved initial progress schedule by narrow bar next to a wider bar for the current schedule.

2. Show date each activity actually started or finished when an event has occurred. Clearly identify actual dates in two right-most columns in left portion of an 11 by 17-inch chart.

3. Indicate the percentage progress to the date of submittal for each activity.

1.04 SUBMITTALS

A. Submit the initial progress schedule within 15 days after award of contract. Project Manager will review the schedule and return a reviewed copy within 21 days after receipt.

B. Cut-off dates for progress revisions may be as early as the 20th of the month to avoid delaying processing of Payment Applications. Use the cut-off date for the first approved revision for further revisions.

C. When required, re-submit within seven days after return of review copy.

D. Include connecting lines between bars in the schedule to indicate the sequence that activities will be accomplished. Connecting lines when the activity's start or finish is modified will identify impact of preceding or succeeding activities. Submit a minimum of six copies of the bar chart on 11 by 17-inch opaque reproductions. Project Manager will retain five copies and return the remaining copy.

PART 2 P R O D U C T S - Not Used

PART 3 E X E C U T I O N - Not Used

END OF SECTION

Section 01330

SUBMITTAL PROCEDURES

PART 1 G E N E R A L

1.01 SECTION INCLUDES

A. Submittal procedures for:

1. Schedule of Values
2. Construction Schedules and Cash Flow Curve (billing forecast).
3. Shop Drawings, Product Data and Samples
4. Operations and Maintenance (O&M) Data
5. Manufacturer's Certificates
6. Construction Photographs
7. Project Record Documents and monthly certification.
8. Video Tapes
9. Design Mixes

1.02 SUBMITTAL PROCEDURES

A. Scheduling and Handling:

1. Submit Shop Drawings, data and Samples for related components as required by Specifications and Project Manager.
2. Schedule submittals well in advance of need for construction Products. Allow time for delivery of Products after submittal approval.
3. Develop submittal schedule that allows sufficient time for initial review, correction, resubmission and final review of all submittals. Allow a minimum of 30 days for initial review. Project Manager will review and return submittals to Contractor as expeditiously as possible but time required for review will vary depending on complexity and quantity of data submitted.

4. Project Manager's review of submittals covers only general conformity to Drawings, Specifications and dimensions that affect layout. Contractor is responsible for quantity determination. No quantities will be verified by Project Manager. Contractor is responsible for errors, omissions or deviations from Contract requirements; review of submittals does not relieve Contractor from the obligation to furnish required items in accordance with Drawings and Specifications.

5. Submit five copies of documents unless otherwise specified.

6. Revise and resubmit submittals as required. Identify all changes made since previous submittal.

7. Assume risk for fabricated Products delivered prior to approval. Do not incorporate Products into the Work, or include payment for Products in periodic progress payments, until approved by Project Manager.

B. Transmittal Form and Numbering:

1. Transmit each submittal to Project Manager with Transmittal letter which includes:
   a. Date and submittal number
   b. Project title and number
   c. Names of Contractor, Subcontractor, Supplier and manufacturer
   d. Identification of Product being supplied
   e. Location of where Product is to be Installed
   f. Applicable Specification section number

2. Identify deviations from Contract documents clouding submittal drawings. Itemize and detail on separate 8-1/2 by 11-inch sheets entitled "DEVIATIONS FOR _____." When no deviations exist, submit a sheet stating no deviations exist.

3. Have design deviations signed and sealed by an appropriate design professional, registered in the State of Texas.

4. Sequentially number transmittal letters beginning with number one. Use original number for resubmittals with an alphabetic suffix (i.e., 2A for the first resubmittal of submittal 2, or 15C for third resubmittal of submittal 15, etc.). Show only one type of work or Product on each submittal. Mixed submittals will not be accepted.

C. Contractor's Stamp:

1. Apply Contractor's Stamp certifying that the items have been reviewed in detail by Contractor and that they comply with Contract requirements, except as noted by requested variances.

2. As a minimum, Contractor's Stamp shall include:
   a. Contractor's name
   b. Job number
   c. Submittal number
   d. Certification statement Contractor has reviewed submittal and it is in compliance with the Contract
   e. Signature line for Contractor

D. Submittals will be returned with one of the following Responses:

1. "ACKNOWLEDGE RECEIPT" when no response and resubmittal is required.

2. "NO EXCEPTION" when sufficient information has supplied to determine that item described is accepted and that no resubmittal is required.

3. "EXCEPTIONS AS NOTED" when sufficient information has been supplied to determine that item will be acceptable subject to changes, or exceptions, which will be clearly stated. When exceptions require additional changes, the changes must be submitted for approval. Resubmittal is not required when exceptions require no further changes.

4. "REJECTED-RESUBMIT" when submittal does not contain sufficient information, or when information provided does not meet Contract requirements. Additional data or details requested by Project Manager must be submitted to obtain approval.

1.03 MANUFACTURER'S CERTIFICATES

A. When required by Specification sections, submit manufacturers' certificate of compliance for review by Project Manager.

B. Place Contractor's Stamp on front of certification.

C. Submit supporting reference data, affidavits, and certifications as appropriate.

D. Product certificates may be recent or from previous test results, but must be acceptable to Project Manager.

1.04 DESIGN MIXES

A. When required by Specification sections, submit design mixes for review.

B. Place Contractor's Stamp, as specified in this section, on the front of each design mix.

C. Mark each mix to identify proportions, gradations, and additives for each class and type of mix submitted. Include applicable test results from samples for each mix. Perform tests and certifications within 12 months of the date of the submittal.

D. Maintain copies of approved mixes at mixing plant.

1.05 CHANGES TO CONTRACT

A. Changes to Contract may be initiated by completing a Request for Information form. Project Manager will provide a response to Contractor by completing the form and returning it to Contractor.

1. If Contractor agrees that the response will result in no increase in cost or time, a Minor Change in the Work will be issued by City Engineer.

2. If Contractor and Project Manager agree that an increase in time or cost is warranted, Project Manager will forward the Request for Proposal for negotiation of a Change Order.

PART 2 P R O D U C T S - Not Used

PART 3 E X E C U T I O N - Not Used

END OF SECTION

Section 01340

SHOP DRAWINGS, PRODUCT DATA, AND SAMPLES

PART 1 G E N E R A L

1.01 SECTION INCLUDES

A. Methods, schedules, and processes to be followed for Shop Drawings, Product Data and Sample submittals.

1.02 REQUIREMENT

A. Submit Shop Drawings, Product Data and Samples as required by Document 00700 - General Conditions and Specification sections, using procedures specified in Section 01330 - Submittal Procedures and the requirements of this Section.

B. Shop Drawings, Product Data and Samples are not considered Contract documents.

1.03 SHOP DRAWING/SUBMITTAL SCHEDULE

A. Submit a separate Shop Drawing submittal schedule at same time the Construction Schedule is submitted. List Products for which Shop Drawings and other submittals are required in the order that they appear in Specifications. Include Product Data and Sample submittals in the schedule. Payment Applications or Certificates for Payment will not be processed until Project Manager has approved the Shop Drawing submittal schedule.

1.04 SHOP DRAWINGS

A. Submit a minimum of seven sets of Shop Drawings and Product Data in a form and quality suitable for microfilming. Review and sign Shop Drawings indicating compliance with the Contract.

B. Place Contractor's Stamp on each drawing as described in Section 01330 - Submittal Procedures.

C. Show the following accurately and distinctly:

1. Field and erection dimensions;

2. Arrangement and section views;

3. Relation to adjacent materials or structure, including complete information for making connections between the Work and work under other contracts;

4. Types of Products and finishes;

5. Parts list and descriptions;

6. Assembly drawings of equipment components and accessories showing respective positions and relationships to the complete equipment package;

7. Identify details by referencing drawing sheet and detail numbers, schedule or room numbers as shown on the Contract drawings, where necessary for clarity.

D. Scale drawings to provide a true representation of the specific equipment or item Furnished.

E. Coordinate and submit components, necessary for Project Manager to adequately review submittal, as a complete package. Reproduction of the Drawings for use in Shop Drawings is not allowed.

F. For major changes to original documents, submit Computer-Aided Design (CAD) drawings on a media acceptable to Project Manager.

1.05 PRODUCT DATA

A. Submit Product Data for review as required in Specifications.

B. Place Contractor's stamp, on each data item submitted, as described in Section 01330 - Submittal Procedures.

C. Mark each copy to identify applicable Products, models, and options to be used in the Work. Where required by Specifications, supplement manufacturers' standard data to provide information unique to the Work.

D. Give manufacturers, trade name, model or catalog designation and applicable reference standard for Products specified only by reference standards.

E. Pre-approved and Pre-qualified Products.

1. For "pre-approved", "pre-qualified" and "approved" Products named in the City standard products list, provide an appropriate list designation,

as described in Section 01630 - Product Substitution Procedures, within 30 days after Notice to Proceed.

2. For Products proposed as alternates to "approved" products, provide information required to demonstrate that the proposed Products meet the level of quality and performance criteria of the "approved" product.

1.06 SAMPLES

A. Submit Samples for review as required by Specifications. Have Samples reviewed and signed by a Registered Professional.

B. Place Contractor's stamp on each Sample or firmly attach a sheet of paper with Contractor's stamp, as described in Section 01330 - Submittal Procedures.

C. Submit the number of Samples specified in Specifications; Project Manager will retain one.

D. Reviewed Samples that may be used in the Work are identified in Specifications.

PART 2 P R O D U C T S - Not Used

PART 3 E X E C U T I O N - Not Used

END OF SECTION

SECTION 01351

ENVIRONMENTAL SAFETY AND WORKER PROTECTION

PART 1 GENERAL

1.01 SECTION INCLUDES

Environmental Safety and Worker Protection including monitoring emissions and exposure to workers and providing an appropriate response. The role of the Certified Industrial Hygienist (CIH) is also defined.

1.02 MEASUREMENT AND PAYMENT

No separate measurement and payment for work performed under this Section. The Contractor shall include the cost for this work in the contract bid price for work of which this is a component part.

1.03 REFERENCES

The following is a list of applicable requirements to this project. It is not intended to be a complete listing of all laws and regulations to which the Contractor must comply.

A. Code of Federal Regulations

1. 29 CFR 1910, "Occupational Safety and Health Standards".

   a. 29 CFR 1910.146 "Permit-required confined spaces".

2. 29 CFR 1926, "Safety and Health Regulations for Construction" (Construction Industry Standards).

   a. 29 CFR 1926.33 "Access to Employee Exposure and Medical Records".

   b. 29 CFR 1926.51, "Sanitation Standard".

   c. 29 CFR 1926.59, "Hazard Communication".

   d. 29 CFR 1926.62, "Lead".

   e. 29 CFR 1926.103 "Respiratory Protection".

3. 40 CFR 50, "National Primary and Secondary Ambient Air Quality

Standards"

a. 40 CFR 50 Appendix B, "Reference Method for the Determination of Suspended Particulate Matter in the Atmosphere (High Volume Method)".

b. 40 CFR 50 Appendix G, "Reference Method for the Determination of Lead in Suspended Particulate Matter Collected from Ambient Air".

4. 40 CFR 58, "Ambient Air Quality Surveillance".

5. 40 CFR 60 Appendix A, "Visual Determination of Fugitive Emissions from Material Sources and Smoke Emissions from Fires".

6. 40 CFR 117, "Determination of Reportable Quantities for Hazardous Substances".

7. 40 CFR 122, "Administered Permit Program: The National Pollutant Discharge Elimination System".

B. National Institute for Occupational Health and Safety

NIOSH Method 7082, "Lead" (or equivalent).

C. American Society for Testing and Materials

ASTM D3335, "Test Method for Low Concentrations for Lead, Cadmium, and Cobalt in Paint by Atomic Absorption Spectroscopy."

D. EPA (Environmental Protection Agency) Publications

1. SW-846, "Test Methods for Evaluating Solid Waste - Physical/Chemical Methods".

2. EPA Method 3050, "Acid Digestion of Sediments, Sludges, and Soils".

E. SSPC Guide 6, "Guide for Containing Debris Generated During Paint Removal Operations".

F. SSPC Guide 7, "Guide for the Disposal of Lead Contaminated Surface Preparation Debris".

G. SSPC Publication 91-18, "Industrial Lead Paint Removal Handbook".

H. Texas Commission on Environmental Quality

1. Texas Administrative Code (TAC) 30, Chapter 101, "General Rules".

2. Texas Administrative Code (TAC) 30, Chapter 111, "Control of Air Pollution from Visible Emissions and Particulate Matter".

3. Texas Administrative Code (TAC) 30, Chapter 290, "Water Hygiene".

4. Texas Administrative Code (TAC) 30, Chapter 307, "Surface Water Quality Standards".

5. Texas Administrative Code (TAC) 30, Chapter 309, "Effluent Limitations".

6. Texas Administrative Code (TAC) 30, Chapter 335, "Industrial Solid Waste and Municipal Hazardous Waste".

1.04 SUBMITTALS

A. Submittals shall conform to requirements of Section 01330 – Submittal Procedures.

B. Submittals shall conform to appropriate codes for regulatory requirements.

1.05 DEFINITION

A. Acceptance Criteria: Minimum standards for the content of programs, plans, procedures, and designs required by this specification for the performance of this project. Acceptance criteria will be the basis for judging the responsiveness of Contractors' programs and will also be used as a basis for suspending work, if necessary.

B. Action Level: Employee exposure, without regard to the use of respirators, to an airborne concentration of lead of 30 micrograms per cubic meter of air (µg/m3) calculated as an eight hour time-weighted average (TWA).

C. CERCLA: Comprehensive Environmental Response, Compensation, and Liability Act; commonly called Superfund. Federal laws addressing the clean up of hazardous waste sites. Amended in 1986 by Superfund Amendments and Re-Authorization Act (SARA). EPA implementing regulations are contained in 40 CFR 300-373.

D. Competent Person: One who is capable of identifying existing and predictable lead hazards in the surroundings or working conditions and who has authorization to take prompt corrective measures to eliminate them.

E. Containment System: An enclosure built around lead paint removal areas designed to contain lead paint debris and prevent emissions to the environment.

F. Dust Collection: Mechanical ventilation system designed specifically for the containment, capture, and removal of airborne particulate from the containment. Dust collection systems shall include ductwork, plenums and/or hoppers, and dust collector(s) for the removal of leaded paint dust from the air stream prior to discharging to the atmosphere.

G. Emission: A release of material to the air, water, or ground.

H. Entry/Exit Airlock: An isolated enclosure located at the entrance of the containment in which the workers remove contaminated dust and debris from their work clothes.

I. EPA: The US. Environmental Protection Agency. Regulations are contained in Title 40 of the Code of Federal Regulations (40 CFR).

J. Hazardous Waste (lead paint debris): Waste that is classified as hazardous due to its concentrations of regulated hazardous substances. Paint debris is classified as hazardous waste if, after testing by the Toxicity Characteristic Leaching Procedure (TCLP), the leachate contains any of the 8 metals or other substances in concentrations at or above limits established in 40 CFR 261.

K. HEPA: A high efficiency particulate filter (HEPA) that is 99.97% efficient against particles of 0.3 microns in size or larger.

L. Lead Containing Dust and Debris: Dust and debris generated during the project which contains lead in any amount, including but not limited to pulverized paint, spent abrasive, filters (wet and dry), and containment materials upon which lead is still present.

M. NIOSH: National Institute of Occupational Safety and Health.

N. OSHA: Occupational Safety and Health Administration. Standards are contained in Title 29 of the Code of Federal Regulations, Parts 1910 and 1926 (29 CFR 1910 and 29 CFR 1926).

O. Owner: The City of Houston

P. PEL: Permissible Exposure Limit. An employee exposure, without regard to the use of respirators, to an airborne concentration of lead of 50 µg/m3 over an 8 hour TWA.

Q. POTW: Publicly Owned Treatment Works

R. RCRA: Resource Conservation and Recovery Act. Federal law pertaining to hazardous waste management. EPA implementing regulations are contained in 40 CFR 240-280.

S. Regulated Area: Area established by the Contractor to demarcate the zone(s) beyond which airborne concentrations of lead do not exceed the Action Level.

T. SSPC: Society for Protective Coatings. An independent, non-profit organization of engineers, technical specialists, and Contractors whose goal is research and development of new coatings and methods for removal, application, and disposal of existing coatings on industrial structures.

U. Tarpaulins: Flexible fabric, vinyl, plastic or canvas cover sheets, impenetrable to dust, wind, and water, used to enclose the cable and/or scaffold support system comprising the containment enclosure.

V. TCLP: Toxicity Characteristic Leaching Procedure. Laboratory tests conducted on wastes that determine the amount of hazardous materials that leach out into a test solution. The test is intended to simulate the properties of water as it leaches through a solid waste landfill. TCLP testing is defined in 40 CFR 261, Appendix II.

W. TSP: Total Suspended Particulate

PART 2 PRODUCTS

2.01 MATERIAL AND EQUIPMENT

A. The Contractor is to supply materials and equipment to insure the safety and protection of workers and the environment in accordance with these specifications.

PART 3 EXECUTION

3.01 ENVIRONMENTAL PROTECTION AND MONITORING

NOTE: Section 09971 "Painting and Protective Coatings", 2.04 "Containment System" specifically identifies containment system requirements.

A. Protection of Ambient Air: Visible emissions are to be controlled to meet, as a minimum, TAC 30 Chapter 111," Control of Air Pollution from Visible Emissions and Particulate Matter" requirements and SSPC-Guide 6I (CON), Level 1 Emissions. Air monitoring and analysis may be performed by the City during abrasive blast cleaning operations. Such monitoring will be in accordance with 40

CFR 50, Appendix B, "Reference Method for the Determination of Suspended Particulate Matter in the Atmosphere" and/or 40 CFR 50, Appendix G, "Reference Method for the Determination of Lead in Suspended Particulate Matter Collected from Ambient Air". The limits for down wind pollutant concentrations allowed during blasting operations are as follows:

PM-10: 450 micrograms/cubic meter/ 8 hr.. (40 CFR 50.6)

Lead (Pb): 13.5 micrograms/cubic meter/8 hr.. (40 CFR 50.12)

Visible emissions and/or monitored emissions for PM-10 and TSP lead in excess of the above levels shall be cause for shut down of the project until corrections to control/ containment system or paint removal/ surface preparation operations are made to comply with these requirements.

B. Protection of Surface and Storm Water: The Contractor shall take all necessary precautions to ensure lead contaminants do not enter surface waters or storm water drainage systems.

1. The Contractor shall protect the area around ditches and drainage inlets. Daily verification of proper protection to minimize the potential contaminants reaching the drainage system shall be performed.

2. The Contractor shall collect all potentially contaminated process waters for testing and, as appropriate, treatment. Process water from pressure washing, wet abrasive blast cleaning or hygiene facilities shall not be discharged to drainage systems or surface waters.

3. The Contractor may remove lead or other heavy metals from such waters through filtration, ion exchange or other approved means. Following treatment, water samples must be tested prior to disposal. Discharge to sanitary sewer lines requires authorization, in writing, from a POTW.

C. Protection of Soil and Grounds: The Contractor shall protect the soil around the structure to ensure that the soil does not become contaminated. Where lead is present in the coatings to be removed, as indicated in Section 02136 "Waste Material Handling and Disposal", the Contractor shall provide for the sampling and analysis of soil samples for total lead content.

1. Sampling and analysis shall be performed prior to commencement of paint removal operations to establish a background "base level". Soil samples shall be taken 3 feet from the base of the tank(s), at a distance of 6-10 feet beyond the proposed containment structure and at the property line.

2. Samples from each area shall be taken in a minimum of four directions, at

circular increments of 90^0, one of which shall include the direction of prevailing wind. Samples shall also be obtained, at the direction of the engineer, at the closest points of public access (i.e. housing, park, school).

3. The soil sampling procedure shall be as outlined in SSPC Guide 6 Section 5.5.5. Each sampling point shall be sufficiently identified on a site map to allow return to the exact location upon project completion.

4. Each sample shall be split in two portions, one for immediate analysis and the other sealed, preserved and furnished to the Engineer. The samples shall be analyzed in accordance with EPA Method 3050, "Acid Digestion of Sediments, Sludges and Soils", and shall be performed by a qualified laboratory approved by the Engineer.

5. Samples shall be obtained at the completion of work (post-construction samples) from all locations from which pre-construction samples were obtained. Samples shall be collected, handled and tested in the same manner as described above.

6. Upon completion of the work, soils found to be contaminated with lead in greater quantity than found in the background "base level", established at the start of the work, shall be removed by the Contractor to the depth necessary to achieve a lead content equivalent to, or below, the pre-construction back ground levels. Disposal shall be in accordance with applicable regulations.

7. The Contractor shall replace in-kind (i.e., topsoil, structural fill, etc.) with an equivalent amount of non-contaminated soil, compact in place and grade to pre-existing conditions. The Contractor shall also replace in-kind any surface improvements, such as grass, shrubs, etc. that were damaged or destroyed by the work. The soil removal, replacement and related work is to be performed by the Contractor at no additional cost to the Owner.

3.02 WORKER PROTECTION

A. The Contractor shall develop a written Compliance Program to establish and implement practices and procedures for assuring that no employee is exposed to lead at concentrations greater than 50 micrograms per cubic meter of air ($\mu g/m^3$), the OSHA permissible exposure limit (PEL). This program is in addition to other OSHA hazard communication and safety and health requirements of the project, and shall be revised and updated at least every six months.

1. The program shall establish methods for complying with this specification and the OSHA Construction Industry Lead Standard, 29 CFR 1926.62(e)(2)(ii). The Federal regulation is referred to as the "Lead

Standard" for the purpose of this specification.

2. The program shall apply to all Contractor employees associated with lead on the project, and to subcontractors working under the direct control of the Contractor who are associated with lead on the project.

3. The program shall assign the specific responsibility for implementation and enforcement of the program to the Contractors' company management. The Contractor's Competent Person(s) shall be identified, by name, and qualifications submitted. The Competent Person shall be on-site during any operations which involve the removal, handling or disturbing of lead containing materials.

4. The program shall contain a description of each activity in which lead is emitted (e.g. equipment used, material involved, controls in place, crew size, employee job responsibilities, operating procedures and maintenance practices).

5. The program shall contain a report of the technology considered in meeting the PEL and air monitoring data which documents the source of lead emissions.

6. The program shall contain a work practice program which includes items required in the lead standard such as protective clothing and equipment, housekeeping, and hygiene facilities and practices.

B. Exposure Monitoring: The Contractor shall be responsible for conducting and reporting worker exposure assessments in accordance with 29 CFR 1926.62.

1. Representative personal air samples shall be collected at the beginning of the lead removal work to determine employee lead exposures. Tasks involving potential lead exposure include, but are not limited to, paint removal operations, clean-up, and debris handling operations. Full shift (at least 7 hours) air samples shall be collected for each job classification in the exposure area. The range of exposures for lead removal and cleanup activities shall be determined.

2. During the initial monitoring, workers performing the following activities (or equivalent) shall be protected to the anticipated exposure levels which are dictated by the lead standard:

   a. 500 $\mu g/m^3$: Manual demolition of structures containing lead-containing coatings or paint (e.g., dry wall), manual scraping, manual sanding, heat gun applications, power tool cleaning with dust collection systems, and spray painting with lead paint.

b. 2,500 $\mu g/m^3$: Using lead-containing mortar, lead burning, or conducting the following activities where lead-containing coatings or paint are present: rivet busting, power tool cleaning without dust collection systems, clean-up activities where dry expendable abrasives are used, and the movement and removal of abrasive blasting enclosures.

c. More than 2,500 $\mu g/m^3$: Activities involving lead containing coatings or paint on structures disturbed by abrasive blasting, welding, cutting, and torch burning.

3. Protection requires compliance with the necessary respiratory protection, personal protective clothing and equipment, change areas and washing facilities, blood lead and zinc protoporphyrin monitoring, and employee training. The protection measures shall be modified, as necessary, after the exposure results are received.

4. Where initial monitoring indicates that lead exposures are below the Action Level, and where work activities and conditions remain the same as at the time of initial sampling, additional monitoring need not be repeated for that work activity.

5. Where the initial monitoring of a given work activity indicates that lead exposures are at or above the Action Level, additional exposure monitoring shall be conducted monthly. The monthly monitoring is more frequent than frequencies established in the lead standard which are at least every 6 months if above the Action Level, but below the PEL, or every 3 months if above the PEL.

6. All air samples shall be collected and analyzed according to NIOSH Method 7082, or equivalent. All samples shall be analyzed by laboratories accredited by the American Industrial Hygiene Association for metals analysis.

7. All exposed employees shall be notified in writing of the monitoring results within five (5) days after receiving the results.

8. The Action Level for airborne lead exposure is 30 $\mu g/m^3$, as an 8-hour time weighted average (TWA) concentration, without regard to the use of respirators. Whenever workers' airborne lead exposures exceed the Action Level, the Contractor shall implement the following:

   a. Periodic Exposure Monitoring
   b. Employee Information and Training

c. Employee Medical Surveillance and Medical Removal Protection
d. Housekeeping
e. Record keeping
f. Signs and Regulated Areas

9. The Permissible Exposure Limit (PEL) for airborne lead exposure is 50 $\mu g/m^3$, as an 8-hour TWA concentration. When the work area contains airborne lead levels above the PEL the Contractor shall implement the following in addition to those items listed in 3.02.B.8 of this section:

a. Compliance Program
b. Respiratory Protection
c. Protective Clothing and Equipment
d. Hygiene Facilities and Practices

C. Respiratory Protection: After feasible engineering controls and work practices have been implemented, respiratory protection shall be used to maintain employees' lead exposures below the PEL.

1. Respirators shall be worn by all employees, other Contractors, inspectors, or observers who enter regulated areas.

2. The Contractor shall develop a written Respiratory Protection Program in compliance with 29 CFR 1910.134, paragraphs (b), (d), (e), and (f), and the lead standard. The program shall address the selection, use, maintenance, and inspection of respirators, and qualifications for respirator users.

D. Protective Clothing and Equipment: The Contractor shall provide protective clothing and equipment and ensure they are worn by all employees whose lead exposures exceed the PEL, or who enter regulated areas.

1. Protective clothing shall include washable and/or disposable full body coveralls, gloves, foot coverings, and hoods. Other protective equipment shall include face shields, hard hats, eye protection, and hearing protection as appropriate.

2. Disposable protective clothing shall be used for no more than one work day. Such clothing may have to be disposed of as hazardous waste.

3. Reusable protective equipment shall be cleaned or replaced weekly if exposure levels are less than 200 $\mu g/m^3$, or daily if the exposure levels are greater than or equal to 200 $\mu g/m^3$.

4. Clothing shall not be removed or "cleaned" by any means which could reintroduce the lead dust into the ambient air. This includes brushing,

shaking, and blowing. Vacuums equipped with HEPA filters shall be used for this purpose.

5. Reusable coveralls shall be collected at the end of each work day in closed containers. The containers shall be labeled in accordance with the requirements of 29 CFR 1926.62(g)(2)(vii). Contaminated clothing shall be cleaned in accordance with all applicable Federal, State, or local regulations pertaining to lead-contaminated laundry and water discharge. Laundries shall be informed that the clothing contains lead. If the clothing is washed on site, the discharge water shall be filtered, containerized, and arrangements made with the local POTW or other approved means of proper disposal.

6. Protective clothing and equipment shall be removed in the contaminated section of the change area and shall not be worn into any clean areas.

7. The Contractor shall provide the necessary clothing and equipment for use by the Owner and its designated representatives.

E. Housekeeping: Accumulations of lead-containing dust and debris generated by work activities shall be removed and cleaned daily.

1. All persons doing the cleanup shall be trained in performing lead activities, respirator qualified, and participate in the medical surveillance program. Respirators and protective clothing shall be worn by all persons doing the cleanup.

2. Compressed air may be used for housekeeping if used within containment and in conjunction with a ventilation system designed to capture the dust. Otherwise, HEPA-filtered vacuum cleaners shall be employed.

3. All lead-containing dust and debris shall be collected in sealed containers. The waste shall be tested to determine whether it will be disposed of as hazardous waste.

F. Personal Hygiene Facilities and Practices

1. Clean change areas shall be provided when employees' lead exposures exceed the PEL. The change areas shall be equipped with storage facilities for street clothing and a separate area for the removal and storage of lead-contaminated clothing and equipment. They shall be designed and used so that contamination of street clothing does not occur. Employees shall not leave the project site wearing any clothing worn while performing lead activities. Airborne lead exposures in the change area shall be maintained below the Action Level.

2. Shower facilities shall be provided whenever employees' lead exposures exceed the PEL. Shower facilities shall comply with OSHA Sanitation Standard, 29 CFR 1929.51. All employees whose lead exposures exceed the PEL shall shower at the end of each work shift or before leaving the project area. The shower facilities shall be made available for use by the Owner and its representatives, such as inspectors or observers.

3. Arrangements shall be made with the local POTW for the proper disposal of the shower and wash water after filtration (e.g., through a three stage 100, 50, and 5 micron filtering system), ion exchange, or other approved treatment technology.

4. Clean lunch areas shall be provided for all employees whose lead exposures exceed the PEL. Employees shall remove or clean (by vacuuming) their protective clothing and wash their hands and face before entering the lunch area. Lead exposures in the lunch area shall be maintained as free as practicable from lead contamination.

5. An adequate number of clean lavatory and hand washing facilities shall be provided. These shall comply with the OSHA Sanitation Standard, 29 CFR 1929.51.

6. Eating, drinking, smoking, chewing of food or tobacco products, or the application of cosmetics shall not be permitted in any areas where the lead exposures exceed the PEL. Thorough washing of hands and face is required prior to undertaking any of these activities.

G. Medical Surveillance and Medical Removal Protection

1. All employees who are exposed to lead above the Action Level in a single day during this project shall be provided with initial and periodic medical examinations and blood lead tests as required by the lead standard. A final blood lead test shall be provided for each worker upon completion of the project, or at any time a worker's employment at the project ceases.

2. When blood lead levels over 50 µg/dl are encountered, the Contractor shall provide for the temporary removal of employees from lead exposure above the Action Level. The required medical surveillance and periodic blood lead tests shall be provided in strict accordance with the lead standard throughout the removal.

3. Employees who will be required to wear a respirator or who request one shall be provided with a respirator and the necessary medical examinations to determine their ability to wear a respirator.

4. All examinations shall be provided by the Contractor and shall be performed by or under the direct supervision of a licensed physician.

H. Employee Information and Training

1. The Contractor shall provide lead training for all employees who are exposed to lead above the Action Level for this project.

2. The content of lead training shall include, as a minimum, those items listed in the lead standard.

3. Training shall also include hazard communication in accordance with 29 CFR 1926.59.

4. The Contractor shall notify other employers at the project site of the nature of the lead exposure work, the need to remain out of exposure areas, the warning sign and labeling system in effect, and the potential need for them to take measures to protect their employees.

I. Signs and Regulated Areas

1. The Contractor shall establish a regulated area surrounding activities where lead exposures exceed the Action Level. This includes locations where lead-containing debris is handled or transferred to storage containers.

2. The regulated area shall be demarcated by ropes, tape, walls, or containment's with caution signs posted at all accessible sides. Signs shall contain the legend:

WARNING
LEAD WORK AREA
POISON
NO SMOKING OR EATING

3. The Contractor shall control access of persons into regulated areas. Access shall be limited to individuals with proper training and personal protective equipment, and medical surveillance testing.

4. All persons entering regulated areas shall wear protective clothing and respirators.

5. Eating, drinking, smoking, and chewing of food or tobacco products shall be prohibited in regulated areas and in any area where lead exposures exceed the Action Level.

J. Record keeping: All records relating to training, medical examinations, blood lead monitoring, and exposure monitoring shall be maintained by the Contractor as required by the lead standard. All records shall be available for review by the Owner or its representative upon request.

3.03 CERTIFIED INDUSTRIAL HYGIENIST (CIH)

A. The Contractor shall provide for the services of a Certified Industrial Hygienist (CIH) who must be certified by the American Board of Industrial Hygiene in comprehensive practice.

B. Duties of the CIH shall be as follows:

1. Conduct and/or verify training for contractor employees in accordance with 29 CFR 1926.62 (l).

2. Review and approve Contractor's Written Compliance Plan for conformance to 29 CFR 1926.62(e)(2)(ii) and this Specification.
3. Monitor and evaluate work weekly to assure conformance with the approved plan and that hazardous exposure is adequately controlled in accordance with worker safety and health requirements of these specifications

4. Provide monthly reports of work compliance with control requirements in regards to working in a lead environment.

C. Activities of the CIH shall include:

1. Meet with City to discuss details of Contractor's Written Compliance Plan for lead paint removal.

2. Ensure worker and area air monitoring, testing and reporting are conducted by or under the direction of the CIH.

3. Furnish a detailed worker and area air monitoring schedule coordinated with Contractor's proposed production schedule.

4. Directing, monitoring and inspecting lead paint removal work to ensure that the requirements of the Contract have been satisfied during the entire lead paint removal operation.

5. Report results of air monitoring samples to the Engineer, signed by the CIH within 48 hours after the air samples are taken.

6. The CIH shall review sampling data, collected on a day when lead paint

removal operations occur, to determine if conditions require any change in work methods. Removal work shall not continue until approval is given by the CIH.

7. The CIH shall verify in writing and submit monitoring data to verify that:

   a. Air borne lead levels at and beyond the lead control (regulated) area were and remained less than 30 mg/m^3 of air

   b. Contractor conformance to 29 CFR 1926.62 and Item 3.02, above

   c. There were no visible accumulations of lead contaminated paint, dust or debris on the work site. Adjacent areas that may have become contaminated were properly cleaned and inspected.

   d. The CIH shall verify that the work area and contractor's equipment have been adequately cleaned of lead contamination prior to demobilization from the work site.

3.04 DEMOBILIZATION

The Contractor shall not remove the lead control area, boundaries, warning signs, etc. prior to proper removal of all hazardous wastes, debris and materials from the site and the City's receipt and acceptance of the CIH's verification.

END OF SECTION

Section 01410

TPDES REQUIREMENTS

1.01 SECTION INCLUDES

A. Documentation to be prepared and signed by Contractor/Operator before conducting construction operations, in accordance with the Texas Pollutant Discharge Elimination System (TPDES) Construction General Permit Number TXR 150000 issued February 15, 2008 (the Construction General Permit).

B. Implementation, maintenance inspection, and termination of storm water pollution prevention control measures including, but not limited to, erosion and sediment controls, storm water management plans, waste collection and disposal, off-site vehicle tracking, and other appropriate practices shown on the Drawings or specified elsewhere in the Contract.

C. Review of the Storm Water Pollution Prevention Plan (SWP3) implementation in a meeting with Project Manager prior to start of construction.

1.02 DEFINITIONS

A. Commencement of Construction Activities: The exposure of soil resulting from activities such as clearing, grading, and excavation activities, as well as other construction related activities (e.g., stock piling of fill material, demolition).

B. Large Construction Activity: Project that:o

1. disturbs five acres or more, or

2. disturbs less than five acres but is part of a larger common plan of development that will disturb five acres or more of land.

C. Small Construction Activity: Project that:

1. disturbs one or more acres but less than five acres, or

2. disturbs less than one acre but is part of a larger common plan of development that will ultimately disturb one or more acres but less than five acres.

D. TPDES Operator:

Operator - The person or persons associated with a large or small construction activity that is either a primary or secondary as defined below:

Primary Operator – the person or persons associated with a large or small construction activity that meets either of the following two criteria:

(a) the persons have operational control over construction plans and specifications, including the ability to make modifications to those plans and specifications; or

(b) the person or persons have day-to-day operational control of those activities at a construction site that are necessary to ensure compliance with a storm water pollution prevention plan (SWP3) for the site or other permit conditions (e.g., they are authorized to direct workers at a site to carry out activities required by the SWP3 or comply with other permit conditions).

Secondary Operator – The person whose operational control is limited to the employment of other operators or to the ability to approve or disapprove changes to plans and specifications. A secondary operator is also defined as a primary operators if there are no other operators if there are no other operators at the construction site.

PART 2 P R O D U C T S - Not Used

PART 3 E X E C U T I O N

3.01 SITE SPECIFIC STORM WATER POLLUTION PREVENTION PLAN (SWP3)

A. Prepare a SWP3 following Part III of the Construction General Permit and the Storm Water Management Handbook for Construction Activities issued under City Ordinance Section 47-695(b). If conflicts exist between the Construction General Permit and the handbook, the more stringent requirements will apply.

B. Update or revise the SWP3 as needed during the construction following Part III, Section E of the Construction General Permit.

C. Submit the SWP3 and any updates or revisions to Project Manager for review and address comments prior to commencing, or continuing, construction activities.

3.02 NOTICE OF INTENT For Large Construction Activity

A. Fill out, sign, and date TCEQ Form 20022 (03/05/2008) Notice of Intent (NOI) for Storm Water Discharges Associated with Construction Activity under the TPDES Construction General Permit (TXR 150000), **ATTACHMENT 1** of this Section 01410.

B. Transmit the signed Contractor's copy of TCEQ Form 20022 (03/05/2008), along with a $325.00 check, made out to Texas Commission on Environmental Quality, and the completed Payment Submittal Form to Project Manager.

C. Project Manager will complete a separate TCEQ Form 20022 (03/05/2008) for City's Notice of Intent, and will submit both Notices, along with checks for application fees, to the TCEQ.

D. Submission of the Notice of Intent form by both the City and Contractor to TCEQ if mailing is required a minimum of seven days before Commencement of Construction Activities.

3.03 CONSTRUCTION SITE NOTICE FOR SMALL CONSTRUCTION ACTIVITY

A. Fill out, sign, and date the Construction Site Notice, Attachment 2 to TPDES General Permit TXR 150000, "Construction Site Notice", **ATTACHMENT 2** of this Section 01410.

B. Transmit the signed Construction Site Notice to Project Manager at least seven days prior to Commencement of Construction Activity.

3.04 CERTIFICATION REQUIREMENTS

A. Fill out TPDES Operator's Information form, **ATTACHMENT 3** of this Section 01410, including Contractor's name, address, and telephone number, and the names of persons or firms responsible for maintenance and inspection of erosion and sediment control measures. Use multiple copies as required to document full information.

B. Contractor and Subcontractors shall sign and date the Contractor's / Subcontractor's Certification for TPDES Permitting, **ATTACHMENT 4** of this Section 01410. Include this certification with other Project certification forms.

C. Submit properly completed certification forms to Project Manager for review before beginning construction operations.

D. Conduct inspections in accordance with TCEQ requirements. Ensure persons or firms responsible for maintenance and inspection of erosion and sediment control measures read, fill out, sign, and date the Erosion Control Contractor's Certification for Inspection and Maintenance. Use the City of Houston Storm Water Pollution Prevention Plan, Construction Site Inspection Report, **ATTACHMENT 5** of this Section 01410 to record maintenance inspections and repairs.

3.05 RETENTION OF RECORDS

A. Keep a copy of this document and the SWP3 in a readily accessible location at the construction site from Commencement of Construction Activity until submission of the Notice of Termination (NOT) for Storm Water Discharges Associated with Construction Activity under TPDES Construction General Permit (TXR 150000). Contractors with day-to-day operational control over SWP3 implementation shall have a copy of the SWP3 available at a central location, on-site, for the use of all operators and those identified as having responsibilities under the SWP3. Upon submission of the NOT, submit all required forms and a copy of the SWP3 with all revisions to Project Manager.

3.06 REQUIRED NOTICES

A. Post the following notices from effective date of the SWP3 until date of final site stabilization as defined in the Construction General Permit:

1. Post the TPDES permit number for Large Construction Activity, with a signed TCEQ Construction Site Notice for large or Small Construction Activity. Signed copies of the City's and Contractor's NOI must also be posted.

2. Post notices near the main entrance of the construction site in a prominent place where it is safely and readily available for viewing by General Public, Local, State, and Federal Authorities. Post name and telephone number of Contractor's local contact person, brief project description and location of the SWP3.

    a. If posting near a main entrance is not feasible due to safety concerns, coordinate posting of notice with Project Manager to conform to requirements of the Construction General Permit.

    b. If Project is a linear construction project (e.g.: road, utilities, etc.), post notice in a publicly accessible location near active construction. Move notice as necessary.

3. Post a notice to equipment and vehicles operators, instructing them to stop, check, and clean tires of debris and mud before driving onto traffic lanes. Post at each stabilized construction access area.

4. Post a notice of waste disposal procedures in a readily visible location on site.

3.07 ON-SITE WASTE MATERIAL STORAGE

A. On-site waste material storage shall be self-contained and shall satisfy appropriate local, state, and federal rules and regulations.

B. Prepare list of waste material to be stored on-site. Update list as necessary to include up-to-date information. Keep a copy of updated list with the SWP3.

C. Prepare description of controls to reduce pollutants generated from on-site storage. Include storage practices necessary to minimize exposure of materials to storm water, and spill prevention and response measures consistent with best management practices. Keep a copy of the description with the SWP3.

3.08 NOTICE OF TERMINATION

A. Submit a NOT, **ATTACHMENT 7** of this Section 01410, to Project Manager within 30 days after:

1. Final stabilization has been achieved on all portions of the site that are the responsibility of the Contractor; or

2. Another operator has assumed control over all areas of the site that have not been stabilized; and

3. All silt fences and other temporary erosion controls have either been removed, scheduled to be removed as defined in the SWP3, or transferred to a new operator if the new operator has sought permit coverage.

B. Project Manager will complete City's NOT and submit Contractor and City's notices to the TCEQ and MS4 entities.

END OF SECTION

PAGE LEFT INTENTIONALLY BLANK

ATTACHMENT 1

Notice of Intent (NOI) for Storm Water Discharges Associated with Construction Activity under the TPDES Construction General Permit (TXR150000)

For help completing this application, read the TXR150000 NOI Instructions (TCEQ-20022-Instructions)

TCEQ Office Use Only
TPDES Permit Number: TXR15 __|__|__|__| - NO
GIN Number: |_____|_____|_____|_____|

A. Construction Site Operator ☐New ☐No Change Customer Reference Number: CN_____
Name:_____
Mailing Address:_____ City:_____ State:____ Zip Code:_____
Country Mailing Information (*if outside USA*) Territory:_____ Country Code:_____ Postal Code:_____
Phone Number:_____ Extension:_____ Fax Number:_____
E-mail Address:_____
Type of Operator: ☐ Individual ☐ Sole Proprietorship - D.B.A. ☐ Partnership ☐ Corporation ☐ Federal Government
☐ State Government ☐ County Government ☐ City Government ☐ Other:_____
Independent Operator? ☐ Yes ☐ No Number of Employees: ☐ 0-20 ☐ 21-100 ☐ 101-250 ☐ 251-500 ☐ 501 or higher
Federal Tax ID:_____ State Franchise Tax ID Number:_____ DUNS Number:_____

B. Billing Address
Name:_____
Mailing Address:_____ City:_____ State:____ Zip Code:_____
Country Mailing Information (*if outside USA*) Territory:_____ Country Code:_____ Postal Code:_____

C. Project / Site Information ☐New ☐No Change Regulated Entity Reference Number: RN_____
Name:_____
Mailing Address:_____ City:_____ State:____ Zip Code:_____
Physical Address:_____ City:_____ County:_____ Zip Code:_____
Location Access Description:_____
Latitude:___°___'___" N Longitude:___°___'___" W Degrees (°), Minutes ('), and Seconds (")
Latitude:_____ Longitude: -_____ Decimal Form
Standard Industrial Classification (SIC) code:_____ Also, describe the construction activity at this site (*do not repeat the SIC code*):
_____
Has a storm water pollution prevention plan been prepared as specified in the general permit (TXR150000)? ☐ Yes ☐ No
Estimated area of land disturbed (to the nearest acre):_____ Is the project / site located on Indian Country Lands? ☐ Yes ☐ No
Does this project / site discharge storm water into a municipal separate storm sewer system (MS4)? ☐ Yes ☐ No
If yes, provide the name of the MS4 operator:_____
Provide the name or segment number of the water body that receives storm water from this project / site:_____

D. Contact - If the TCEQ needs additional information regarding this application, who should be contacted?
Name:_____ Title:_____
Phone Number:_____ Extension:_____ Fax Number:_____
E-mail Address:_____

E. Payment Information - Check / Money Order Number:_____ Name on Check / Money Order:_____

F. Certification
I certify under penalty of law that this document was prepared under my direction or supervision in accordance with a system designed to assure that qualified personnel properly gather and evaluate the information submitted. Based on my inquiry of the person or persons who manage the system, or those persons directly responsible for gathering the information, the information submitted is, to the best of my knowledge and belief, true, accurate, and complete. I am aware there are significant penalties for submitting false information, including the possibility of fine and imprisonment for knowing violations.

Construction Site Operator:
Prefix:_____ First:_____ Middle:_____
Last:_____ Suffix:_____ Title:_____
Signature:_____ Date:_____

If you have questions on how to fill out this form or about the storm water program, please contact us at (512) 239-4671.
Individuals are entitled to request and review their personal information that the agency gathers on its forms. They may also have any errors in their information corrected. To review such information, contact us at (512) 239-3282.

The completed NOI must be mailed to the following address. Use the attached document to submit the $100 application fee. Please note that the NOI and application fee are submitted separately to different addresses.

Texas Commission on Environmental Quality
Storm Water & General Permits Team; MC - 228
P.O. Box 13087
Austin, Texas 78711-3087

TCEQ-20022 (05/03) **Page 1 of 2**

ATTACHMENT 1

Texas Commission on Environmental Quality
Payment Submittal Form

The storm water application fee shall be sent under separate cover to the Texas Commission on Environmental Quality.

This form must be used to submit your Storm Water Application Fee. Please complete the following information, staple your check in the space provided at the bottom of this document, and mail it to:

BY REGULAR U.S. MAIL

Texas Commission on Environmental Quality
Financial Administration Division
Cashier's Office, MC-214
P.O. Box 13088
Austin, TX 78711-3088

BY OVERNIGHT/EXPRESS MAIL

Texas Commission on Environmental Quality
Financial Administration Division
Cashier's Office, MC-214
12100 Park 35 Circle
Austin, TX 78753

Fee Code: GPA

Storm Water General Permit: TXR150000

Check / Money Order No: _____ Amount of Check/Money Order: _____

Date of Check or Money Order: _____

Name on Check or Money Order: _____

Facility / Site Name: _____

Facility / Site Physical Address: _____

City: _____ Zip Code: _____

Staple Check In This Space

ATTACHMENT 1

Completing the Notice of Intent for Storm Water Discharges Associated with Construction Activity under the TPDES Construction General Permit (TXR150000)

A. Construction Site Operator Information

Check boxes and Customer Reference Number
These boxes designate the operator's status as a TCEQ "customer"—in other words, an individual or business that is involved in an activity that we regulate. We assign each customer a number that begins with "CN," followed by nine digits. ***This is not a permit number, registration number, or license number.*** In the remainder of this section, we will use "this customer" to mean the operator for Part A of the form.

- If this customer has not been assigned a Customer Reference Number or if this number is unknown, check "New" and leave the space for the Customer Reference Number blank.
- If this customer has already been assigned this number, enter the operator's Customer Reference Number and:
  - Check "No Change" if all the remaining customer information is the same as previously reported. However, you must still complete most blanks in this form for this notice of intent to be valid.
  - If this customer's information has changed since the last time it was reported to the TCEQ, check neither box and complete the remainder of this notice of intent.
- ***Do not enter a permit number, registration number, or license number in place of the Customer Reference Number.***

Name
Enter the legal name of this customer as authorized to do business in Texas. Include any abbreviations (LLC, Inc., etc.)

Mailing Address
Enter a central and general mailing address for this customer to receive mail from the TCEQ. For example, if this customer is a large company, this address might be the corporate or regional headquarters. On the other hand, for a smaller business, this address could be the same as the site address.

If this is a street address, please follow US Postal Service standards. In brief, these standards require this information in this order.

- the "house" number—for example, the 1401 in 1401 Main St
- if there is a direction before the street name, the one- or two-letter abbreviation of that direction (N, S, E, W, NE, SE, SW, or NW)
- the street name (if a numbered street, do not spell out the number—for example, 6th St, not Sixth St)
- an appropriate abbreviation of the type of street—for example, St, Ave, Blvd, Fwy, Expy, Hwy, Cr, Ct, Ln
- if there is a direction after the street name, the one- or two-letter abbreviation of that direction (N, S, E, W, NE, SE, SW, or NW)
- if there is a room number, suite number, or company mail code

City, State, *and* ZIP Code
Enter the name of the city, the two-letter USPS abbreviation for the state (for example, TX), and the ZIP Code. (Enter the full ZIP+4 if you know it.)

Country Mailing Information
If this address is ***outside*** the United States, enter the territory name, country code, and any non-ZIP mailing codes or other non–U.S. Postal Service features here. If this address is ***inside*** the United States, leave these spaces blank.

Phone Number *and* Extension
This number should correspond to this customer's mailing address given earlier. Enter the area code and phone number here. Leave "Extension" blank if this customer's phone system lacks this feature.

Fax Number
This number should correspond to this customer's mailing address given earlier. Enter the area code and fax number here.

E-mail Address
As with the mailing address, this should be a general address that is appropriate for e-mail to this customer's central or regional headquarters, if applicable.

If "No Change" was checked for this customer, you may skip the rest of the fields in this part of the form and continue to the next part of the NOI.

Type of Operator
Check ***only one*** box

Check ...	*if this customer ...*
Individual	is a person and has not established a business to do whatever causes them to be regulated by us.
Sole Proprietorship—D.B.A.	is a business that is owned by only one person and has not been incorporated. This business may: • be under the person's name • have its own name (doing business as " or d.b.a.) • have any number of employees
Partnership	is a business that is established as a partnership as defined by the Texas Secretary of State's Office
Corporation	meets all of these conditions: • is a legally incorporated entity under the laws of any state or country • is recognized as a corporation by the Texas Secretary of State • has proper operating authority to operate in Texas
Federal, state, county, or city government (as appropriate)	is either an agency of one of these levels of government or the governmental body itself (If a utility district, water district, tribal government, college district, council of governments, or river authority, check "Other" and write in the specific type of government.)
Other	fits none of the above descriptions. Enter a short description of the type of customer in the blank provided

Independent Operator?
Check "No" if this customer is a subsidiary or part of a larger company. Otherwise, check "Yes."

Number of Employees
Check one box to show the number of employees for this customer's entire company, at all locations. ***This is not necessarily the number of employees at the site named in this NOI.***

Federal Tax ID
All businesses, except for some small sole proprietors, should have a federal taxpayer identification number (TIN). Enter this number here. Use no prefixes, dashes, or hyphens. Individuals and sole proprietors do not need to provide a federal tax ID.

State Franchise Tax ID
Corporations and limited liability companies that operate in Texas are issued a franchise tax identification number. If this customer is a corporation or limited liability company, enter this number here.

DUNS Number
Most businesses have a DUNS (Data Universal Numbering System) number issued by Dun and Bradstreet Corp. If this customer has one, enter it here.

B. Billing Address

We will mail the annual fee invoice for this site to the address entered in this section.

Name
Enter the legal name of the person or business to which we should mail this site's fee invoice each year.

Mailing Address
Enter the specific mailing address to which we should mail this site's fee invoice each year. If this is a street address, please follow the US Postal Service standards as described under "A. Construction Site Operator Information" on page 1 of these instructions.

City, State, *and* ZIP Code
Enter the name of the city, the two-letter USPS abbreviation for the state (for example, TX), and the ZIP Code. (Enter the full ZIP+4 if you know it.)

Country Mailing Information
If this address is ***outside*** the United States, enter the territory name, country code, and any non-ZIP mailing codes or other non–U.S. Postal

ATTACHMENT 1

...rvice features here. If this address is ***inside*** the United States, leave these spaces blank.

C. Project / Site Information

Check boxes *and* Regulated Entity Reference Number
These boxes designate this site's status as a TCEQ "regulated entity"—in other words, a location where an activity that we regulate occurs. We assign each regulated entity a number that begins with "RN," followed by nine digits. ***This is not a permit number, registration number, or license number.***

- If this site has not been assigned a Regulated Entity Reference Number or if this number is unknown, check "New" and leave the space for the Regulated Entity Reference Number blank.
- If this site has already been assigned this number, enter the Regulated Entity Reference Number and:
  - Check "No Change" if all the remaining information is the same as previously reported. However, even if there has been no change, you must complete this section at least through "E-mail Address" for this NOI to be valid.
  - If this site's information has changed since the last time it was reported to the TCEQ, check neither box and complete the remainder of this notice of intent.
- ***Do not enter a permit number, registration number, or license number in place of the Regulated Entity Reference Number.***

Name
Enter the name by which you want this site to be known to the TCEQ.

Mailing Address
Enter the specific mailing address for this site. If this is a street address, please follow the US Postal Service standards as described under "A. Construction Site Operator Information" on page 1 of these instructions. If the project / site's mailing address is the same as what is provided in Section A, you may enter "Same as Section A".

City, State, *and* ZIP Code
Enter the name of the city, the two-letter USPS abbreviation for the state (for example, TX), and the ZIP Code. (Enter the full ZIP+4 if you know it.)

Physical Address
...ter the physical address of the site itself. TCEQ staff should be able to ... this address to find the site. Please follow the US Postal Service ...andards as described under "A. Construction Site Operator Information" on page 1 of these instructions. If the project / site does not have a physical address, enter "No Address".

City, County, *and* ZIP Code
Enter the name of the city, the county, and the ZIP Code. (Enter the full ZIP+4 if you know it.) This information must be provided even if you have entered "No Address" in the previous field.

Location Access Description
Enter a physical description of the location of the site based on highway intersections and/or permanent landmarks.

Latitude *and* Longitude
Enter the latitude and longitude of the site in ***either*** degrees, minutes, and seconds ***or*** decimal form.

For help obtaining the latitude and longitude, go to:
http://www.tnrcc.state.tx.us/gis/drgview.html

Standard Industrial Classification (SIC) Code and Activity Description

Provide the SIC code that best describes the construction activity being conducted at the site.

For help with SIC codes, go to:
http://www.osha.gov/oshstats/sicser.html

In addition to the SIC code, you must also provide a description of the construction activity being conducted at the site. This may include such descriptions as: "Apartment Building Construction" or "Shopping Center Construction."

Storm Water Pollution Prevention Plan
This plan identifies the areas and activities that could produce contaminated runoff at your site and then tells how you will ensure that this contamination is mitigated. For example, in describing your mitigation measures, your site's plan might identify the devices that collect and filter storm water, tell how those devices are to be maintained, and tell how frequently that maintenance is to be carried out. ***You must develop this plan before you ...mplete this NOI.*** This plan must be available for a TCEQ investigator to ...iew on request. Specific requirements for the development of the plan can be found in the *Texas Pollutant Discharge Elimination System Construction General Permit (TXR150000)*.

Estimated Area of Land Disturbed
Provide the approximate number of acres that the construction site will disturb. It is appropriate to enter a value less than 5, only if the project is part of a larger common plan that disturbs five or more acres. If the acreage is less than 1, enter 1. "Disturb" means any clearing, grading, excavating, or other similar activities.

Is the site located on Indian Country Lands?
Check "Yes" only if the site is on a reservation or other areas designated by the federal government as Indian Country Lands. If not, check "No."

Destination of Storm Water Discharge
The storm water from your site eventually reaches a receiving water body such as a local stream or lake, possibly via a drainage ditch. The discharge may initially be into a municipal separate storm sewer system (MS4). Check the appropriate boxes for whether storm water is discharged into an MS4. If you checked "Yes" to "An MS4?" then enter the name of the entity that operates the storm sewer—often a city, town, or utility district, but possibly another form of government.

You must also provide the name of the water body that receives the discharge from the construction site (a local stream or lake). Storm water may be discharged directly to a receiving stream or via a storm sewer system. If known, please include the segment number if the discharge is to a classified water body.

For a map that includes segment numbers, go to:
http://www.tnrcc.state.tx.us/water/quality/data/index.html

D. Contact

Give all the relevant information for the person whom TCEQ can contact if there are questions about any of the information on this form—perhaps the same person who completed the form.

E. Payment Information

Provide the number and account holder name from the check or money order used to pay the $100 application fee.

F. Certification

The operator must sign and date this statement to validate this NOI. Be sure to enter the full legal name of the person signing the form and the relevant title—for example, "Operator," "Vice-President," or "Partner." Use the "Prefix" blank for such titles as Dr., Mr., or Ms., as desired. Use the "Suffix" blank for such designations as Ph.D., Jr., Sr., III, or J.D., if applicable.

For a corporation, the application shall be signed by a responsible corporate officer. A responsible corporate officer means a president, secretary, treasurer, or vice-president of the corporation in charge of a principal business function, or any other person who performs similar policy or decision-making functions for the corporation, or the manager of one or more manufacturing, production, or operating facilities employing more than 250 persons or having gross annual sales or expenditures exceeding $25 million (in second-quarter 1980 dollars), if authority to sign documents has been assigned or delegated to the manager in accordance with corporate procedures. Corporate procedures governing authority to sign permit applications may provide for assignment or delegation to applicable corporate positions rather than to specific individuals.

For a partnership or sole proprietorship, the application shall be signed by a general partner or the proprietor, respectively.

For a municipality, state, federal, or other public agency, the application shall be signed by either a principal executive officer or a ranking elected official. For purposes of this application, a principal executive officer of a federal agency includes the chief executive officer of the agency, or a senior executive officer having responsibility for the overall operations of a principal geographic unit of the agency (e.g. regional administrator of the United States Environmental Protection Agency).

Questions?

If you have questions about any of the information on this form, contact our Storm Water Program at 512/239-4671 or look for "Storm Water" on our Web site.

www.tceq.state.tx.us

ATTACHMENT 2

CONSTRUCTION SITE NOTICE

FOR THE
Texas Commission on Environmental Quality (TCEQ)
Storm Water Program

TPDES GENERAL PERMIT TXR150000

The following information is posted in compliance with **Part II.D.2.** of the TCEQ General Permit Number TXR150000 for discharges of storm water runoff from construction sites. Additional information regarding the TCEQ storm water permit program may be found on the internet at:
www.tnrcc.state.tx.us/permitting/waterperm/wwperm/tpdestorm

Contact Name and Phone Number:	
Project Description: (Physical address or description of the site's location, estimated start date and projected end date, or date that disturbed soils will be stabilized)	
Location of Storm Water Pollution Prevention Plan :	

For Construction Sites Authorized Under Part II.D.2. (Obtaining Authorization to Discharge) the following certification must be completed:

I _____ (Typed or Printed Name Person Completing This Certification) certify under penalty of law that I have read and understand the eligibility requirements for claiming an authorization under Part II.D.2. of TPDES General Permit TXR150000 and agree to comply with the terms of this permit. A storm water pollution prevention plan has been developed and implemented according to permit requirements. A copy of this signed notice is supplied to the operator of the MS4 if discharges enter an MS4 system. I am aware there are significant penalties for providing false information or for conducting unauthorized discharges, including the possibility of fine and imprisonment for knowing violations.

_____ _____
Signature and Title Date

PAGE LEFT INTENTIONALLY BLANK

ATTACHMENT 3

TPDES OPERATOR'S INFORMATION

Owner's Name and Address: City of Houston

Mr. _____
(City Official)

_____
(Department)
P. O. Box 1562
Houston, Texas 77251-1562
(713) 247-1000

Contractors' Names and Addresses:

General Contractor: _____

Telephone: _____

Site Superintendent: _____

Telephone: _____

Erosion Control and
Maintenance Inspection: _____

Telephone: _____

Subcontractors' Names and Addresses:

_____ _____

_____ _____

_____ _____

_____ _____

Phone: _____ Phone: _____

Note: Insert name, address, and telephone number of person or firms

PAGE LEFT INTENTIONALLY BLANK

ATTACHMENT 4

CONTRACTOR'S / SUBCONTRACTOR'S

CERTIFICATION FOR TPDES PERMITTING

I certify under penalty of law that I understand the terms and conditions of TPDES General Permit No. TXR150000 and the Storm Water Pollution Prevention Plan for the construction site identified as part of this certification.

Signature: _____

Name: (printed or typed) _____

Title: _____

Company: _____

Address: _____

Date: _____

Signature: _____

Name: (printed or typed) _____

Title: _____

Company: _____

Address: _____

Date: _____

Signature: _____

Name: (printed or typed) _____

Title: _____

Company: _____

Address: _____

Date: _____

PAGE LEFT INTENTIONALLY BLANK

ATTACHMENT 5

EPA NPDES Construction Inspection Form

The following inspection is being performed in compliance with Part IV.D.4. of the NPDES Region 6 Storm Water Construction General Permit [63 Fed. Reg. 36502] and being retained in accordance with Part V of the Permit. Qualified personnel (provided by the permittee or cooperatively by multiple permittees) shall inspect disturbed areas of the construction site that have not been finally stabilized, areas used for storage of materials that are exposed to precipitation, placement and effectiveness of structural control measures, and locations where vehicles enter or exit the site. Inspections shall be performed at least once every 14 days and within 24 hours of the end of a storm event of 0.5 inches or greater. Where sites have been temporarily stabilized, runoff is unlikely due to winter conditions, or during seasonal arid periods in arid areas (0-10 inches of rainfall annually) and semi-arid areas (10-20 inches annually) such inspections shall be conducted at least once every month. This form is primarily intended for use with construction projects in Texas and New Mexico. Permittees on Indian Country lands in Oklahoma, Louisiana and Arkansas and some oil and gas facilities in Oklahoma may use this form if they are eligible for this permit. Other facilities need to check with their NPDES authority before using this form.

If you do not know your NPDES Permit Number, contact the NOI Processing Center at (301)495-4145. This form was prepared as an example and it is not a required form for use with the permit. Alternative forms may be used if they contain all of the required information as set forth in the permit. This form and additional information regarding the NPDES Region 6 storm water program may be found on the Internet at http://www.epa.gov/region6/sw/. Any person with a complaint about the operation of this facility in regards to this permit should contact EPA Region 6 at (214)665-7112.

Permit Number(s) covered by this inspection (e.g. owners, developers, general contractor, builders)		
Signature and Certification in accordance with Part VI.G of the permit:	I certify under penalty of law that this document and all attachments were prepared under my direction or supervision in accordance with a system designed to assure that qualified personnel properly gathered and evaluated the information submitted. Based on my inquiry of the person or persons who manage the system, or those persons directly responsible for gathering the information, the information submitted is, to the best of my knowledge and belief, true, accurate, and complete. I am aware that there are significant penalties for submitting false information, including the possibility of fine and imprisonment for knowing violations. Signature_____ Date_____	
Date of Inspection		
Inspector Name		
Is there a copy of the permit language with the SWPPP?	☐ YES	☐ NO
Is the inspector qualified and are the qualifications documented in the SWPPP?	☐ YES	☐ NO
Is an NPDES storm water construction sign posted at the entrance for all permittees?	☐ YES	☐ NO

You may want to use EPA Region 6 construction checklist to assure components of the SWPPP are complete. This form, the construction sign, and the checklist are available on the Region 6 NPDES Storm Water Forms and Documents web page which may be found on the internet at http://www.epa.gov/earth1r6/6en/w/formsw.htm. In addition to the checklist, you should provide a narrative (see next page) on the existing Best Management Practices and Structural Controls found during each inspection. Any problems identified in an inspection should be corrected within 7 days. The inspection should cover all components of the SWPPP and all potential pollutants. While eroded soil is the primary pollutant of concern, do not forget to inspect for other pollutant sources such as fuel tanks, paints, solvents, stabilization materials, concrete hardner, batch plants, and construction debris. The inspector will need to update the SWPPP to reflect findings of the inspection. The site map should be updated after an inspection to show controls that have been added or removed, to ensure the site map is kept current in accordance with Part IV.C. of the permit.

Revision 4, March 1, 2000

ATTACHMENT 5

Narrative Findings of the inspection:

Observations should include any findings of Best Management Practices or controls that are not in accordance with the SWPPP. If a control is not in place or failed, observe the reason why. A control removed temporarily for work is not necessarily a violation if properly recorded in the SWPPP. If it has been removed, record why it was removed and, if applicable, when it will be reinstalled. If the control has failed, observe the conditions so a conclusion may be made as to wether the control failed for improper maintenance or improper design. The qualified inspector will know when a failed control is inadequate and should be replaced by an improved control mechanism. Qualified inspectors are to have authority to make changes to the SWPPP to assure compliance. Controls that have not been installed should be given a reason why they are not installed and/or a scheduled date for installation if they are designed for a later phase of construction. After the inspection, the SWPPP and its site map should be updated to reflect current conditions of controls and Best Management Practices at the time of the inspection This includes removing uninstalled controls from the site map or otherwise denoting on the site map if they are no longer installed if the controls have been removed because they are no longer necessary (e.g. stabilization has been achieved in that area).

ATTACHMENT 6

City of Houston

Storm Water Pollution Prevention Plan
Construction Site Inspection Report

TPDES/EPA Permit Number _____

COH Storm Water Quality Permit Number _____

DATE _____

No exceptions noted.

The following must be corrected prior to continuing work:

Public Notice improperly posted

Initial Construction Site Inspection Report information requires updating

Copy of NOI not on site

Storm water pollution prevention plan not on site

Erosion and sediment controls improperly installed

Erosion and sediment control devices improperly maintained

Fueling or washout areas not properly protected

Portocan or other sanitary facilities not properly protected

Self-inspection and maintenance records incomplete

Sediment from site outside area of construction

Other (see description below)

_____

_____

Please contact the Storm Water Quality Engineer at
611 Walker, RA-257, Houston TX 77002
713-837-7383 fax 713-837-0570

Once the above items have been corrected, call to arrange for reinspection. No further inspections for any construction related activity shall be made until the above items have been corrected.

_____ Inspector's Signature

_____ Contractor's Signature

_____ Inspector's Name

_____ Contractor's Name

not present

Distribution Stormwater Quality Engineer, Code Enforcement, Inspector, Operator
(Operator is Contractor)

Form _____ (10-01-01)

PAGE LEFT INTENTIONALLY BLANK

ATTACHMENT 7

Notice of Termination (NOT) for Storm Water Discharges Associated with Construction Activity under the TPDES Construction General Permit (TXR150000)

TCEQ Office Use Only
TPDES Permit Number: TXR15__|__|__|__| - NO
GIN Number: __|__ __|__ __|__|__|

For help completing this application, read the TXR150000 NOI Instructions (TCEQ-20023-Instructions).

A. TPDES Permit Number: TXR15_____

B. Construction Site Operator Customer Reference Number: CN _____
Name: _____
Mailing Address: _____
City: _____ State: -- _____ Zip Code: _____
Country Mailing Information (*if outside USA*) Territory: _____ Country Code: _____ Postal Code: _____
Phone Number: _____ Extension: _____ Fax Number: _____
E-mail Address: _____

C. Project / Site Information Regulated Entity Reference Number: RN _____
Name: _____
Physical Address: _____
Location Access Description: _____
City: _____ County: -- _____ Zip Code: _____

D. Contact - If the TCEQ needs additional information regarding this termination, who should be contacted?
Name: _____ Title: _____
Phone Number: _____ Extension: _____ Fax Number: _____
E-mail Address: _____

E. Certification
I certify under penalty of law that authorization under the TPDES Construction General Permit (TXR150000) is no longer necessary based on the provisions of the general permit. I understand that by submitting this Notice of Termination, I am no longer authorized to discharge storm water associated with construction activity under the general permit TXR150000, and that discharging pollutants in storm water associated with construction activity to waters of the U.S. is unlawful under the Clean Water Act where the discharge is not authorized by a TPDES permit. I also understand that the submittal of this Notice of Termination does not release an operator from liability for any violations of this permit or the Clean Water Act.

Construction Site Operator Representative:

Prefix: _____ First: _____ Middle: _____
Last: _____ Suffix: _____
Title: _____

Signature: _____ Date: _____

If you have questions on how to fill out this form or about the storm water program, please contact us at (512) 239-4671. Individuals are entitled to request and review their personal information that the agency gathers on its forms. They may also have any errors in their information corrected. To review such information, contact us at (512) 239-3282.

The completed NOT must be mailed to the following address:

Texas Commission on Environmental Quality
Storm Water & General Permits Team; MC - 228
P.O. Box 13087
Austin, Texas 78711-3087

TCEQ - 20023 (02/03)

Page 1 of 1

PAGE LEFT INTENTIONALLY BLANK

ATTACHMENT 7

Completing the Notice of Termination for Storm Water Discharges Associated with Construction Activity under the TPDES Construction General Permit (TXR150000)

Who May File a Notice of Termination (NOT) Form
Permittees disturbing 5 acres or more (or part of a larger common plan of development or sale disturbing 5 acres or more) who are presently covered under the Texas Pollutant Discharge Elimination System (TPDES) Construction General Permit must submit a Notice of Termination (NOT) when final stabilization has been achieved on all portions of the site that is the responsibility of the permittee; or another permitted operator has assumed control over all areas of the site that have not been finally stabilized and all silt fences and other temporary erosion controls have either been removed, scheduled for removal as defined in the SWP3, or transferred to a new operator if the new operator has sought permit coverage. Erosion controls that are designed to remain in place for an indefinite period, such as mulches and fiber mats, are not required to be removed or scheduled for removal.

Final Stabilization occurs when either of the following conditions are met:

(a) All soil disturbing activities at the site have been completed and a uniform (e.g, evenly distributed, without large bare areas) perennial vegetative cover with a density of 70% of the native background vegetative cover for the area has been established on all unpaved areas and areas not covered by permanent structures, or equivalent permanent stabilization measures (such as the use of riprap, gabions, or goetextiles) have been employed.

(b) For individual lots in a residential construction site by either:

(1) the homebuilder completing final stabilization as specified in condition (a) above; or

(2) the homebuilder establishing temporary stabilization for an individual lot prior to the time of transfer of the ownership of the home to the buyer and after informing the homeowner of the need for, and benefits of, final stabilization.

(c) For construction activities on land used for agricultural purposes (e.g. pipelines across crop or range land), final stabilization may be accomplished by returning the disturbed land to its preconstruction agricultural use. Areas disturbed that were not previously used for agricultural activities, such as buffer strips immediately adjacent to a surface water and areas which are not being returned to their preconstruction agricultural use must meet the final stabilization conditions of condition (a) above.

A. TPDES Permit Number
Provide the TPDES permit number assigned to the operator of the construction site.

B. Construction Site Operator Information
Customer Reference Number
This number designates the operator's status as a TCEQ "customer"—in other words, an individual or business that is involved in an activity that we regulate. We assign each customer a number that begins with "CN," followed by nine digits. ***This is not a permit number, registration number, or license number.*** In the remainder of this section, we will use "this customer" to mean the operator for Part B of the form.

- If this customer has not been assigned a Customer Reference Number, leave the space for the Customer Reference Number blank.
- If this customer has already been assigned this number, enter the operator's Customer Reference Number.
- ***Do not enter a permit number, registration number, or license number in place of the Customer Reference Number.***

Name
Enter the legal name of this customer as authorized to do business in Texas. Include any abbreviations (LLC, Inc., etc.).

Mailing Address
Enter a central and general mailing address for this customer to receive mail from the TCEQ. For example, if this customer is a large company, this address might be the corporate or regional headquarters. On the other hand, for a smaller business, this address could be the same as the site address.

If this is a street address, please follow US Postal Service standards. In brief, these standards require this information in this order:

- the "house" number—for example, the 1401 in 1401 Main St
- if there is a direction before the street name, the one- or two-letter abbreviation of that direction (N, S, E, W, NE, SE, SW, or NW)
- the street name (if a numbered street, do not spell out the number—for example, 6th St, not Sixth St)
- an appropriate abbreviation of the type of street—for example, St, Ave, Blvd, Fwy, Exwy, Hwy, Cr, Ct, Ln
- if there is a direction after the street name, the one- or two-letter abbreviation of that direction (N, S, E, W, NE, SE, SW, or NW)
- if there is a room number, suite number, or company mail code

City, State, *and* ZIP Code
Enter the name of the city, the two-letter USPS abbreviation for the state (for example, TX), and the ZIP Code. (Enter the full ZIP+4 if you know it.)

ATTACHMENT 7

Country Mailing Information
If this address is ***outside*** the United States, enter the territory name, country code, and any non-ZIP mailing codes or other non–U.S. Postal Service features here. If this address is ***inside*** the United States, leave these spaces blank.

Phone Number *and* Extension
This number should correspond to this customer's mailing address given earlier. Enter the area code and phone number here. Leave "Extension" blank if this customer's phone system lacks this feature.

Fax Number
This number should correspond to this customer's mailing address given earlier. Enter the area code and fax number here.

E-mail Address
As with the mailing address, this should be a general address that is appropriate for e-mail to this customer's central or regional headquarters, if applicable.

C. Project / Site Information

Regulated Entity Reference Number
This number designates this site's status as a TCEQ "regulated entity"—in other words, a location where an activity that we regulate occurs. We assign each regulated entity a number that begins with "RN," followed by nine digits. ***This is not a permit number, registration number, or license number.***

- If this site has not been assigned a Regulated Entity Reference Number, leave the space for the Regulated Entity Reference Number blank.
- If this site has already been assigned this number, enter the Regulated Entity Reference Number.
- ***Do not enter a permit number, registration number, or license number in place of the Regulated Entity Reference Number.***

Name
Enter the name by which you want this site to be known to the TCEQ.

Physical Address
Enter the physical address of the site itself. TCEQ staff should be able to use this address to find the site.

Location Description
Enter a physical description of the location of the site based on highway intersections and/or permanent landmarks.

City, County, *and* ZIP Code
Enter the name of the city, the county, and the ZIP Code. (Enter the full ZIP+4 if you know it.)

D. Contact

Give all the relevant information for the person whom TCEQ can contact if there are questions about any of the information on this form—perhaps the same person who completed the form.

E. Certification

The operator must sign and date this statement to validate this NOI. Be sure to enter the full legal name of the person signing the form and the relevant title—for example, "Operator," "Operator's attorney." or "Senior Site Manager." Use the "Prefix" blank for such titles as Dr., Mr., or Ms., as desired. Use the "Suffix" blank for such designations as Ph.D., Jr., Sr., III, or J.D., if applicable.

For a corporation, the application shall be signed by a responsible corporate officer. A responsible corporate officer means a president, secretary, treasurer, or vice-president of the corporation in charge of a principal business function, or any other person who performs similar policy or decision-making functions for the corporation; or the manager of one or more manufacturing, production, or operating facilities employing more than 250 persons or having gross annual sales or expenditures exceeding $25 million (in second-quarter 1980 dollars), if authority to sign documents has been assigned or delegated to the manager in accordance with corporate procedures. Corporate procedures governing authority to sign permit applications may provide for assignment or delegation to applicable corporate positions rather than to specific individuals.

For a partnership or sole proprietorship, the application shall be signed by a general partner or the proprietor, respectively.

For a municipality, state, federal, or other public agency, the application shall be signed by either a principal executive officer or a ranking elected official. For purposes of this application, a principal executive officer of a federal agency includes the chief executive officer of the agency, or a senior executive officer having responsibility for the overall operations of a principal geographic unit of the agency (e.g. regional administrator of the United States Environmental Protection Agency).

Questions?

If you have questions about any of the information on this form, contact our Storm Water Program at 512/239-4671 or look for "Storm Water" on our Web site:
www.tceq.state.tx.us

Section 01422

REFERENCE STANDARDS

PART 1 GENERAL

1.01 SECTION INCLUDES

A. Section includes general quality assurance as related to Reference Standards and a list of references.

1.02 QUALITY ASSURANCE

A. For Products or workmanship specified by association, trade, or Federal Standards, comply with requirements of the standard, except when more rigid requirements are specified or are required by applicable codes.

B. Conform to reference standard by date of issue current on the date as stated in the General Conditions.

C. Request clarification from Project Manager before proceeding should specified reference standards conflict with Contract documents.

1.03 SCHEDULE OF REFERENCES

AASHTO	American Association of State Highway and Transportation Officials 444 North Capitol Street, N.W. Washington, DC 20001
ACI	American Concrete Institute P.O. Box 9094 Farmington Hills, MI 48333-9094
AGC	Associated General Contractors of America 333 John Carlyle Street Alexandria, VA 22314
AI	Asphalt Institute Research Park Drive P.O. Box 14052 Lexington, KY 40512

AITC	American Institute of Timber Construction 7012 S. Revere Parkway, Suite 140 Englewood, CO 80112
AISC	American Institute of Steel Construction One East Wacker Dr. Chicago, IL 60601
AISI	American Iron and Steel Institute 1101 17th Street NW, Suite 1300 Washington, DC 20036
ASME	American Society of Mechanical Engineers Three Park Avenue New York, NY 10016
ANSI	American National Standards Institute 1819 L Street NW Sixth Floor Washington, D.C. 20036
APA	American Plywood Association Box 11700 Tacoma, WA 98411
API	American Petroleum Institute 1220 L Street, N.W. Washington, DC 20005
AREA	American Railway Engineering and Maintenance-of-Way-Association 8201 Corporate Drive, Suite 1125 Landover, Maryland 20785
ASTM	American Society for Testing and Materials 100 Barr Harbor Drive West Conshohocken, PA 19428
AWPA	American Wood-Preservers' Association P.O. Box 5690 Granbury, TX 76049
AWS	American Welding Society 550 NW 42nd Avenue Miami, FL 33126

AWWA	American Water Works Association 6666 West Quincy Avenue Denver, CO 80235
COH	City of Houston P.O. Box 1562 Houston, TX 77251-1562
CLFMI	Chain Link Fence Manufacturers Institute 9891 Broken Land Parkway, Suite 300 Columbia, MD 21046
CRSI	Concrete Reinforcing Steel Institute 933 Plum Grove Road Schaumburg, IL 60173-4758
EJMA	Expansion Joint Manufacturers Association 25 North Broadway Tarrytown, NY 10591
FS	Federal Standardization Documents General Services Administration Specifications Unit (WFSIS) 7th and D Streets, S.W. Washington, DC 20406
ICEA	Insulated Cable Engineer Association P.O. Box 440 S. Yarmouth, MA 02664
IEEE	Institute of Electrical and Electronics Engineers 445 Hoes Lane P.O. Box 440 Piscataway, NJ 08855-459
ISA	International Society of Arboriculture P.O. Box 3129 Champaign, IL 61826-3129
MIL	Military Specifications General Services Administration Specifications Unit (WFSIS) 7th and D Streets, S.W. Washington, DC 20406

NACE	National Association of Corrosion Engineers 1440 South Creek Drive Houston, TX 77084-4906
NEMA	National Electrical Manufacturers' Association 1300 North 17th Street, Suite 1847 Rosslyn, VA 22209
NFPA	National Fire Protection Association 1 Batterymarch Park P.O. Box 9101 Quincy, MA 02269-9101
OSHA	Occupational Safety Health Administration U.S. Department of Labor Office of Public Affairs – Room N3647 Washington, DC 20210
PCA	Portland Cement Association 5420 Old Orchard Road Skokie, IL 60077-1083
PCI	Prestressed Concrete Institute 209 W. Jackson Blvd. Chicago, IL 60606
SDI	Steel Deck Institute P.O. Box 25 Fox River Grove, IL 60021
SSPC	Society for Protective Coatings (Steel Structures Painting Council) 40 24th Street, Sixth Floor Pittsburgh, PA 15222
TAC	Texas Administrative Code Texas Water Resources Conservation Commission P. O. Box 13087 Library MC-196 Austin, TX 78711-3087
TxDOT	Texas Department of Transportation 125 East 11th Street Austin, TX 78701-2483

UL	Underwriters' Laboratories, Inc. 333 Pfingston Road Northbrook, IL 60062
UNI-BELL	UNI-BELL Pipe Association 2655 Villa Creek Drive, Suite 155 Dallas, TX 75234

PART 2 P R O D U C T S - Not Used

PART 3 E X E C U T I O N - Not Used

END OF SECTION

Section 01450

CONTRACTOR'S QUALITY CONTROL

PART 1 G E N E R A L

1.01 SECTION INCLUDES

A. Quality assurance and control of Installation and manufacturers' field services and reports.

1.02 QUALITY ASSURANCE AND CONTROL OF INSTALLATION

A. Monitor quality control over Suppliers, manufacturers, Products, services, site conditions and workmanship, to produce work of specified quality at no additional cost to the City.

B. Comply fully with manufacturers' Installation instructions, including each step in sequence.

C. Request clarification from Project Manager before proceeding when manufacturers' instructions conflict with the Contract.

D. Comply with specified standards as minimum requirements for the Work except when more stringent tolerances, codes, or specified requirements indicate higher standards or more precise workmanship.

E. Perform the Work by persons qualified to produce a specified level of workmanship.

1.03 REFERENCES

A. Obtain copies of standards and maintain at job site when required by individual Specification sections.

1.04 MANUFACTURERS' FIELD SERVICES AND REPORTS

A. When specified in individual Specification sections, or as required by Project Manager, provide Product suppliers' or manufacturers' technical representative to observe site conditions, conditions of surfaces and Installation, quality of workmanship, start-up of equipment, operator training, testing, adjusting and balancing of equipment as applicable and to initiate required operation. Conform to minimum time requirements for start-up operations and operator training when provided in Specification sections.

B. At Project Manager's request, submit qualifications of manufacturers' representative to Project Manager 15 days in advance of required representatives' services. Representative is subject to approval by Project Manager.

C. Manufacturer's representatives shall report observations and site decisions or instructions given to applicators or installers that are supplemental or contrary to a manufacturer's written instructions. Submit report within 14 days of observation to Project Manager for review.

PART 2 P R O D U C T S - Not Used

PART 3 E X E C U T I O N - Not Used

END OF SECTION

Section 01452

INSPECTION SERVICES

PART 1 GENERAL

1.01 SECTION INCLUDES

A. Inspection services and references

1.02 INSPECTION

A. City Engineer will appoint an Inspector to represent the City and perform inspections, tests, and other services specified in individual Specification sections.

B. City Engineer may also appoint, employ, and pay an independent firm to provide additional inspection or construction management services as indicated in Section 01454 - Testing Laboratory Services.

C. The independent firm will submit reports to Project Manager, indicating observations and results of tests and indicating compliance or noncompliance with Contract requirements.

D. Contractor shall assist and cooperate with the Inspector; furnish samples of materials, design mix, equipment, tools, and storage.

E. Contractor shall notify Project Manager 24 hours prior to expected time for operations requiring services.

F. Contractor shall sign and acknowledge reports for Inspector.

PART 2 PRODUCTS - Not Used

PART 3 EXECUTION - Not Used

END OF SECTION

Section 01454

TESTING LABORATORY SERVICES

PART 1 G E N E R A L

1.01 SECTION INCLUDES

A. Testing laboratory services and Contractor responsibilities related to those services.

1.02 REFERENCES

A. ASTM C 1077 - Standard Practice for Laboratories Testing Concrete and Concrete Aggregates for Use in Construction and Criteria for Laboratory Evaluation.

B. ASTM D 3666 - Standard Specification for Minimum Requirements for Agencies Testing and Inspecting Bituminous Paving Materials.

C. ASTM D 3740 - Standard Practice for Minimum Requirements for Agencies Engaged in the Testing and/or Inspection of Soil and Rock as Used in Engineering Design and Construction.

D. ASTM E 329 - Standard Specification for Minimum Requirements for Agencies Engaged in the Testing and/or Inspection of Materials Used in Construction.

E. ISO/TEC Guide 25 - General Requirements for the Competence of Calibration and Testing Laboratories.

1.03 SELECTION AND PAYMENT

A. The City will select, employ, and pay for services of an independent testing laboratory to perform inspection and testing identified in Part 3 of individual Specification sections.

B. Contractor shall employ and pay for services of an independent testing laboratory or laboratories to perform inspection and testing identified in Part 2 of individual Specification sections.

C. Employment of a testing laboratory by the City shall not relieve Contractor of its obligation to perform work in accordance with requirements of Contract documents.

D. The City will deduct a minimum two-hour charge for testing laboratory time from periodic progress payment when operations requiring testing or inspection are canceled without prior notification.

E. The City will deduct cost of retesting from periodic progress payment whenever failed work is removed, replaced and retested.

1.04 QUALIFICATION OF LABORATORY

A. Meet laboratory requirements of ASTM E 329 and applicable requirements of ASTM C 1077, ASTM D 3666, and ASTM D 3740.

B. Meet ISO/TEC Guide 17025 conditions for accreditation by the American Association for Laboratory Accreditation (A2LA) in specific fields of testing required in individual Specification sections.

C. If laboratory subcontracts are part of the testing services, such work will be placed with a laboratory complying with the requirements of this Section.

1.05 LABORATORY REPORTS

A. Testing laboratory shall provide and distribute copies of laboratory reports to the distribution list Project Manager provides at the pre-construction conference.

B. Keep one copy of each laboratory report distributed or faxed at the site field office for duration of the Work.

C. Laboratory will fax material supplier, Contractor and Project Manager reports that indicate failing test results by no later than close of business on the working day following test completion and review.

1.06 LIMITS ON TESTING LABORATORY AUTHORITY

A. Laboratory may not release, revoke, alter, or enlarge requirements of the Contract.

B. Laboratory may not approve or accept any portion of the Work.

C. Laboratory may not assume Contractor duties.

D. Laboratory has no authority to stop the Work.

1.07 CONTRACTOR RESPONSIBILITIES

A. Provide safe access to the Work and to manufacturer's facilities for Project Manager and for testing laboratory personnel.

B. Provide testing laboratory with a copy of the Construction Schedule and a copy of each update to Construction Schedule.

C. Notify Project Manager and testing laboratory during normal working hours of the day previous to expected time for operations requiring inspection and testing services. When Contractor fails to make timely prior notification, do not proceed with the operations requiring inspection and testing services.

D. Notify Design Consultant 24 hours in advance when Specification requires presence of Design Consultant for sampling or testing.

E. Request and monitor testing as required to provide timely results and to avoid delays to the Work. Provide samples to laboratory in sufficient time to allow required test to be performed in accordance with specified test methods before intended use of the Product.

F. Cooperate with laboratory personnel in collecting samples on site. Provide incidental labor and facilities for safe access to the Work to be tested, to obtain and handle samples at site or at source of Products to be tested, and to facilitate tests and inspections including storage and curing of test samples.

G. Make arrangements with laboratory through Project Manager. Payment for additional testing will be made in accordance with Document 00700 - General Conditions:

1. Re-testing required for failed tests.

2. Re-testing for nonconforming work.

3. Additional sampling and tests requested beyond specified requirements.

4. Insufficient notification of cancellation of tests for work scheduled but not performed.

PART 2 P R O D U C T S - Not Used

PART 3 EXECUTION

3.01 CONDUCTING TESTING

A Conform to laboratory sampling and testing methods specified in individual Specification sections to the latest issues of ASTM standards, TxDOT methods, or other recognized test standards as approved by Project Manager.

B Requirements of this Section shall also apply to those tests for approval of materials, for mix designs, and for quality control of materials as performed by employed testing laboratories.

END OF SECTION

SUPPLEMENTARY SPECIFICATION

Section 01502 S

MOBILIZATION

The following supplement modifies Specification Section 01502. Where a portion of the Specification is modified or deleted by this supplementary specification, the unaltered portions of the specification shall remain in effect.

1. Delete paragraph 1.02.C.1. and replace it with the following:

C.1. Authorization for payment of 100 percent of the contract price for mobilization onto the well site will be made upon mobilization of construction equipment and facilities onto the well site and upon receipt and approval by Project Manager of the following items, as applicable:

a. Safety Program (Document 00700, Paragraph 1 0.1.1).

b. Site Utilization Plan (Section 01145).

c. Schedule of Values (Section 01292), if any.

d. Initial Construction Photographs (Section 01321), if needed.

e. Preliminary Construction Schedule and Billing Forecast (Section 01325)

f. Construction Schedule (Section 01325 or Section 01326 , as applicable)

g. Submittal Schedule (Section 01330).

h. Site specific Storm Water Pollution Prevention Plan (SWPPP) and Notice of Intent (NOI) along with storm water application fee (Section 01410), if required.

i. Contractor's Quality Control Plan (Section 01450), if required.

j. Establishment of a Field Office for Project Manager meeting requirements of Section 01520 - Temporary Field Office.

k. Traffic Control Plan (Section 01555), if required.

l. Plan for Control of Ground and Surface Water (Section 01578), if required.

m. Project Signs Submittal (Section 01580).

n. Trench Safety Program (Section 02260), if required.

o. Dewatering Plan, when required.

2. Delete paragraph 1.02.C.2.

END OF SUPPLEMENT

Approved By:

Sonny Do, P.E.
Acting Assistant Director
Water Engineering Section
Engineering and Construction Division

11/24/15
Date

Section 01502

MOBILIZATION

PART 1 GENERAL

1.01 SECTION INCLUDES

A. Mobilization of construction equipment and facilities onto the site.

1.02 MEASUREMENT AND PAYMENT

A. Unit Price Contracts. If Contract is Unit Price Contract, measurement for mobilization is on a lump sum basis.

B. Stipulated Price (Lump Sum) Contract. If Contract is Stipulated Price Contract, payment for Work in this Section is included in total Stipulated Price.

C. Mobilization payments will be included in monthly payment estimates upon written application by Contractor subject to the following provisions:

1. Authorization for payment of 50 percent of that portion of Contract Price designated for mobilization will be made upon receipt and approval by Project Manager of the following items, as applicable:

   a. Safety Program (Document 00700, Paragraph 10.1.1).

   b. Site Utilization Plan (Section 01145).

   c. Schedule of Values (Section 01292), if any.

   d. Initial Construction Photographs (Section 01321), if needed.

   e. Preliminary Construction Schedule and Billing Forecast (Section 01325).

   f. Construction Schedule (Section 01325 or Section 01326, as applicable).

   g. Submittal Schedule (Section 01330).

   h. Site specific Storm Water Pollution Prevention Plan (SWPPP) and Notice of Intent (NOI) along with storm water application fee (Section 01410), if required.

   i. Contractor's Quality Control Plan (Section 01450), if required.

j. Establishment of a Field Office for Project Manager meeting requirements of Section 01520 - Temporary Field Office.

k. Traffic Control Plan (Section 01555), if required.

l. Plan for Control of Ground and Surface Water (Section 01578), if required.

m. Project Signs Submittal (Section 01580).

n. Trench Safety Program (Section 02260), if required.

o. Dewatering plan, when required.

2. Authorization for payment of the balance of that portion of Contract Price designated for mobilization will be made upon completion of the Work amounting to five percent of Original Contract Price. The amount of Contract Price designated for mobilization may not be applied in computing whether or not five percent of the Original Contract Price has been obtained.

3. Mobilization payments will be subject to retainage amounts stipulated in Document 00700 – General Conditions.

PART 2 P R O D U C T S -Not Used

PART 3 E X E C U T I O N -Not Used

END OF SECTION

Section 01504

TEMPORARY FACILITIES AND CONTROLS

PART 1 GENERAL

1.01 SECTION INCLUDES

A. Temporary facilities and necessary controls for the Project, including utilities, telephone, sanitary facilities, storage sheds and building, safety requirements, first aid equipment, fire protection, security measures, protection of the Work and property, access roads and parking, environmental controls, pest and rodent control and disposal of trash, debris and excavated material.

B. Facilities and controls specified in this section are considered minimum for the Project. Provide additional facilities and controls for proper execution of the Work and to meet Contractor's responsibilities for protection of persons and property.

1.02 MEASUREMENT AND PAYMENT

A. UNIT PRICES

1. No separate payment will be made for any temporary facilities and controls required under this section. Include cost of such work in contract price listed for mobilization.

1.03 CONTRACTOR'S RESPONSIBILITY

A. Comply with applicable requirements specified in other sections of Specifications.

1. Maintain and operate temporary facilities and systems to assure continuous service.

2. Modify and extend systems as the Work progress requires.

3. Completely remove temporary materials and equipment when no longer required.

4. Restore existing facilities used for temporary services to specified or original condition.

PART 2 PRODUCTS - NOT USED

PART 3 EXECUTION

3.01 TEMPORARY UTILITIES

A. Obtaining Temporary Service:

1. Make arrangements with utility service companies for temporary services.

2. Abide by rules and regulations of the utility service companies or authorities having jurisdiction.

3. Be responsible for utility service costs until Date of Substantial Completion. Included are fuel, power, light, heat, and other utility services necessary for execution, completion, testing, and initial operation of work.

B. Water:

1. Provide water required for and in connection with work to be performed and for specified tests of piping, equipment, devices, or for other use as required for proper completion of the Work.

2. Water to be drawn from public fire hydrants. Obtain transit meter from City of Houston, Department of Public Works and Engineering, Taps and Meters Section. Pay required deposit based on rates established by latest ordinance.

3. Provide and maintain an adequate supply of potable water for domestic consumption by Contractor personnel, Project Manager and representatives of the City.

C. Electricity and lighting:

1. Provide electric power service required for the Work including required testing, lighting, operation of equipment, and other Contractor use.

2. Electric power service includes temporary power or generators required to maintain plant operations during scheduled shutdowns.

3. Minimum lighting level shall be 10 foot-candles for open areas; 20-foot-candles for stairs and shops. Provide a minimum of one 300-watt lamp for each 200 square feet of work area.

D. Temporary Heat and Ventilation:

1. Provide temporary heat necessary for protection or completion of the Work.

2. Provide temporary heat and ventilation to assure safe working conditions; maintain enclosed areas at a minimum of 50 degrees F.

E. Telephone:

1. Provide emergency telephone service at Project site for use by Contractor personnel and others performing work or furnishing services at the site.

2. Provide Houston-Metro lines, allowing unlimited calls, without charge in Greater Houston Metropolitan area with "call waiting" and "call forwarding" options. Provide one telephone answering machine with beeperless remote message retrieval capability.

F. Sanitary Facilities:

1. Provide and maintain sanitary facilities for persons on the site; comply with regulations of State and local departments of health.

2. Enforce use of sanitary facilities by construction personnel at site. Enclose sanitary facilities. Pit-type toilets are not permitted. No discharge will be allowed from these facilities. Collect and store sewage and waste so as not to cause nuisance or health problems. Haul sewage and waste off-site and properly dispose in accordance with applicable regulations.

3. Locate toilets near the Work site and secluded from view insofar as possible. Keep toilets clean and supplied throughout the course of the Work.

3.02 STORAGE SHEDS AND BUILDINGS

A. Provide adequately ventilated, watertight storage facilities with floor above ground level for Products susceptible to weather damage.

B. Storage of Products not susceptible to weather damage may be on blocks off the ground.

C. Store Products in a neat and orderly manner. Place Products to permit easy access for identification, inspection and inventory.

D. Fill and grade site for temporary structures to provide drainage away from temporary and existing buildings.

3.03 SAFETY REQUIREMENTS

A. Submit a safety program at the pre-construction meeting and follow the program in accordance with Document 00700 – General Conditions. Include documented response to trench safety requirements of Section 02260 - Trench Safety System.

B. Conduct operations in strict accordance with applicable Federal, State and local safety codes and statutes and with good construction practice. Establish and maintain procedures for safety of all work, personnel and equipment involved in the Work.

C. Observe and comply with Texas Occupational Safety Act (Art. 5182a, V.C.S.) and with all safety and health standards promulgated by Secretary of Labor under Section 107 of Contract Work Hours and Standards Act, published in 29 CFR Part 1926 and adopted by Secretary of Labor as occupational safety and health standards under Williams-Steiger Occupational Safety and Health Act of 1970, and to other legislation enacted for safety and health of Contractor employees. Safety and health standards apply to Subcontractors and Suppliers as well as to the Contractor.

D. Observance of and compliance with safety regulations is Contractor's responsibility without reliance or superintendence of or direction by Project Manager. Immediately advise Project Manager of investigation or inspection by Federal Safety and Health inspectors of Contractor's or Subcontractor's work or place of work on site under the Contract, and after investigation or inspection, advise Project Manager of results. Submit one copy of accident reports to Project Manager within 10 days of occurrence.

E. Protect areas occupied by workmen using the best available devices for detection of lethal and combustible gases. Test devices frequently to assure functional capability. Constantly observe infiltration of liquids into the Work area for visual or odor evidence of contamination, and immediately take appropriate steps to seal off entry of contaminated liquids to the Work area.

F. Implement safety measures, including but not limited to safety personnel, first-aid equipment, ventilating equipment and other safety equipment specified or detailed on Drawings.

G. Maintain required coordination with City Police and Fire Departments during entire period covered by the Contract.

H. Include Project safety analysis in safety plan. Itemize major tasks and potential safety hazards. Plan to eliminate hazards or protect workers and public from each hazard.

3.04 FIRST AID EQUIPMENT

A. Provide a first aid kit throughout the construction period. List telephone numbers for physicians, hospitals, and ambulance services in each first aid kit.

B. Have at least one person thoroughly trained in first aid and CPR procedures present on the site when work is in progress. Contractor to conform to protocols and requirements for training and protection against "blood borne pathogens".

3.05 FIRE PROTECTION

A. Conform to specified fire protection and prevention requirements established by Federal, State, or local governmental agencies and as provided in Safety Program.

3.06 SECURITY MEASURES

A. Protect the Work, materials, equipment, and property from loss, theft, damage, or vandalism. Protect City property used in performance of the Contract.

B. If existing fencing or barriers are breached or removed for purposes of construction, provide and maintain temporary security fencing equal to existing.

3.07 PROTECTION OF UTILITIES AND PIPELINES

A. Prevent damage to existing public utilities during construction. Approximate locations of known utilities are shown on Drawings, but all lines may not be shown. Excavate with caution and repair lines damaged by construction operations.

B. Use the Utility Coordinating Committee One Call System, telephone number, (713) 223-4567, which must be called 48 hours in advance. The toll free telephone number is 1-800-669-8344, Texas One Call System.

C. Before excavating, locate underground utilities by appropriate means including the use of metal detection equipment, and probes, or by excavation or surveys. Repair damage caused by investigative work and by failure to locate or to preserve underground utilities.

D. Give utility owners a minimum five days notice before commencing excavation to allow time to locate utilities and make adjustments or

relocations when they conflict with the Work. Include cost for temporary relocation of water, wastewater, and storm drainage lines, necessary to accommodate construction, in unit prices for utility construction unless otherwise noted. Bypassing of sanitary waste to storm drainage facilities is not allowed.

E. Prior to excavation near pipelines, request a representative of the pipeline company to meet with Contractor and Project Manager at the site to discuss procedures to be used. Request pipeline company's representative to locate the pipelines in at least three locations: at each side and at centerline of proposed excavation of proposed utility. Also request representative and Project Manager to be present to observe Contractor operations when excavation is conducted within 15 feet of pipeline.

F. Utility service lines are not shown on the construction document drawings. Contractor should anticipate that such service lines exit and should exercise extreme caution during construction. The utility service lines should be repaired and restored immediately as per the specification, if damaged due to any construction activities. No separate payment will be made for this repair and restoration work. Include payment in unit price for work in appropriate sections.

G. Prior to abandonment of utility, make appropriate arrangements with City and owner of utility to terminate service, remove meters, tranformers, and poles as may be required by site conditions.

3.08 PROTECTION OF THE WORK AND PROPERTY

A. Preventive Actions

1. Take necessary precautions and actions to prevent damage, injury, or loss to the Work or public and private property, including:

   a. Storage of apparatus, supplies, and Products in an orderly, safe manner to limit interference with progress of the Work or work of other contractors, utility service companies, or the City's operations.

   b. Suitable storage for Products subject to damage by exposure to weather, theft, breakage, etc.

   c. Limitation of loading pressures imposed upon portions of the Work.

   d. Frequent clean up of refuse, scrap materials, and debris from construction operations, necessary to maintain the site in a safe and orderly condition.

e. Provision of barricades and guard rails to protect pedestrian and traffic around openings, scaffolding, temporary stairs and ramps, excavations, elevated walkways, and other hazardous areas.

2. Protect public and private property adjacent to the site. Obtain written consent before entering or occupying privately-owned land except on easements provided for construction. Restore property damaged by construction operations to condition equal to or better than that existing before the damage.

B. Barricades and Warning Systems

1. Where work is performed on or adjacent to roadways, rights-of-ways, or public land, provide barricades, fences, lights, warning signs, danger signals, and other precautionary measures necessary for protection of persons or property and for protection of the Work.

a. Erect sufficient barricades to keep vehicles and pedestrians from entering the Work. Paint barricades to be visible at night. From sunset to sunrise, provide at least one light at each barricade.

b. Maintain barricades, signs, lights, and provide watchmen until Project Manager approves removal. Whenever work creates encroachment onto public roadways, station flagmen to manage traffic flow in accordance with approved traffic control plan.

c. Conform to requirements of section 01555 – Traffic Control and regulation.

C. PROTECTION OF EXISTING STRUCTURES

1. Underground Facilities

a. Known Underground Facilities are shown on the Drawings but all Facilities may not be shown. Explore sufficiently ahead of trenching and excavation work to locate Underground Facilities in order to prevent damage to them and to prevent interruption of utility services. Restore damage to Underground Facilities to original condition at no additional cost to the City.

b. If necessary to avoid unanticipated Underground Facilities, Project Manager may make changes in location of the Work.

c. If permanent relocation of an Underground Facility is required

and not provided for in the Contract documents, City Engineer will direct Contractor in writing to perform the Work under Modification provisions in Document 00700 - General Conditions.

2. Surface Structures include buildings, tanks, walls, bridges, roads, dams, channels, open drainage, piping, poles, wires, posts, signs, markers, curbs, walks, guard cables, fencing, and other facilities that are visible above the ground level.

3. Protection of Underground Facilities and Surface Structures:

   a. Support in place and protect Underground Facilities and Surface Structures located within or adjacent to the limits of the Work from damage. Install supports as required by the owner of the structure. Satisfy Project Manager that the owner of the facility or structure has approved methods and procedures before installing structure supports.

   b. Avoid moving or changing public utility or private corporation property without prior written consent of a responsible official of the facility or structure. Allow representatives of utilities to enter the construction site for maintenance and repair purposes or to make necessary changes.

   c. Notify utility and pipeline owners and operators of the nature of construction operations and dates when operations will be performed. When construction operations are required in immediate vicinity of existing structures, pipelines, or utilities, give a minimum of five working days advance notice. Probe and flag location of Underground Facilities prior to commencement of excavation. Keep flags in place until construction operations uncover the facility.

   d. Assume risk for damages and expenses to Underground Facilities and Surface Structures within or adjacent to the Work.

D. Employ a structural engineer to ensure protection measures are adequate for the safety and integrity of structures and facilities.

E. PROTECTION OF INSTALLED PRODUCTS:

1. Provide protection of Installed Products to prevent damage from subsequent operations. Remove protection facilities when no longer needed, prior to completion of the Work.

2. Control traffic to prevent damage to Products and surfaces.

3. Provide coverings to protect Products from damage. Cover projections, wall corners, jambs, sills, and exposed sides of openings in areas used for traffic and passage of materials in subsequent work.

3.09 ROADS AND PARKING

A. Prevent interference with traffic and operations of the City on existing roads.

B. Designate temporary parking areas to accommodate construction and City personnel. When site space is not adequate, provide additional off-site parking. Locate as approved by Project Manager.

C. Minimize use by construction traffic on existing streets and driveways.

D. Do not allow heavy vehicles or construction equipment in existing parking areas.

3.10 ENVIRONMENTAL CONTROLS

A. Use methods, equipment, and temporary construction necessary for control of environmental conditions at the site and adjacent areas.

B. Comply with statutes, regulations, and ordinances relating to prevention of environmental pollution and preservation of natural resources including National Environmental Policy Act of 1969, PL 91-190, Executive Order 11514.

C. Minimize impact to the surrounding environment. Do not use construction procedures that cause unnecessary excavation and filling of terrain, indiscriminate destruction of vegetation, air or stream pollution, or harassment or destruction of wildlife.

D. Limit disturbed areas to boundaries established by the Contract. Do not pollute on-site streams, sewers, wells, or other water sources.

E. Do not burn rubbish, debris or waste materials.

3.11 POLLUTION CONTROL

A. Provide methods, means, and facilities necessary to prevent contamination of soil, water or the atmosphere by discharge of Pollutants from construction operations.

B. Provide equipment and personnel to perform emergency measures to contain spillage, and to remove contaminated soils or liquids. Excavate and dispose of contaminated earth off-site in accordance with laws and regulations, and

replace with suitable compacted fill and topsoil.

C. Provide systems necessary for control of Pollutants.

1. Prevent toxic concentrations of chemicals.

2. Prevent harmful dispersal of Pollutants into the environment.

D. Use equipment that conforms to current Federal, State, and local laws and regulations.

3.12 PEST AND RODENT CONTROL

A. Provide rodent and pest control as necessary to prevent infestation of construction or storage areas.

B. Employ methods and use materials that will not adversely affect conditions at site or on adjoining properties.

3.13 NOISE CONTROL

A. Provide vehicles, equipment, and use construction activities that minimize noise to the greatest degree practicable. Conform to noise levels of Chapter 30 –Noise and Sound Level Regulation, City Code of Ordinances, and latest OSHA standards. Do not permit noise levels to interfere with the Work or create a nuisance to surrounding areas.

B. Conduct construction operations during daylight hours except as approved by Project Manager.

C. Select construction equipment that operates with minimum noise and vibration. When directed by Project Manager, correct objectionable noise or vibration produced by operation of equipment at no additional cost to the City. Sound Power Level (PWL) of equipment shall not exceed 85 dbA (re: 10^{-12} watts) measured five feet from the equipment, or at a lower level if prescribed by City Ordinances. Equipment noise requirements are contained in equipment specifications.

3.14 DUST CONTROL

A. Use water or other methods approved by Project Manager to control amount of dust generated by vehicle and equipment operations.

3.15 WATER RUNOFF AND EROSION CONTROL

A. Comply with requirements of section 01410 – TPDES Requirements.

B. Conduct fill, grading and ditching operations and provide adequate methods necessary to control surface water, runoff, subsurface water, and water from excavations and structures in order to prevent damage to the Work, the site, or adjoining properties.

1. Plan and execute construction and earthwork by methods that control surface drainage from cuts and fills, and from borrow and waste disposal areas.

2. Minimize area of bare soil exposed at one time.

3. Provide temporary control measures, such as berms, dikes, and drains.

4. Provide, operate, and maintain equipment and facilities of adequate size to control surface water.

5. Construct fill and waste areas by selective placement of materials to eliminate erosion of surface silts or clays that may erode.

6. Direct water away from excavations, pits, tunnels, and other construction areas to prevent erosion, sedimentation or damage.

7. Maintain existing drainage patterns adjacent to the site by constructing temporary earth berms, sedimentation basins, retaining areas, and temporary ground cover.

8. Dispose of drainage water in a manner to prevent flooding, erosion, or other damage to the site or adjoining areas, in conformance with environmental requirements.

9. Inspect earthwork periodically to detect any evidence of erosion. Take corrective measures as required to control erosion.

END OF SECTION

Section 01520

TEMPORARY FIELD OFFICE

PART 1 GENERAL

1.01 SECTION INCLUDES

A Temporary field office building and associated parking area.

1.02 FACILITY DESCRIPTION

A Temporary field office to be utilized by authorized representatives of the City to coordinate and monitor daily construction activities performed by Contractor.

B. Field office shall be a non-smoking facility.

PART 2 PRODUCTS

2.01 FIELD OFFICE

A General:

1. Locate office in vicinity of the Work at a location approved by Project Manager or where indicated on Drawings.

2. Furnish, Install and maintain field office for exclusive use of authorized representatives of the City. Provide sufficient room for Project meetings and Inspector's office.

3. Provide office within 10 days of Date of Commencement of the Work.

4. Construct two all-weather, hard surfaced parking spaces for exclusive use of authorized representatives of the City. Provide all-weather surfaced walk between parking spaces and field office.

B. Minimum Construction:

1 Structurally sound foundation and superstructure.

Weather tight with insulated roof, walls and 7-foot ceiling (minimum).

3. Stairs or walkway with handrail and covered entrance platform (minimum 4 feet by 4 feet) with mud scraper at door.

4. Resilient floor covering.

5. Screened windows with area equal to approximately 10 percent of floor area sufficient for light, view of the site, and ventilation. Provide each window with operable sash and burglar bars.

6. Secure exterior doors with dead-bolt cylinder locks and burglar bars.

C. Minimum Services:

1. Exterior entrance light.

2. Interior lighting of 75 foot-candles minimum at desktop height

3. Automatic heating to maintain 65 degrees F in winter.

4. Automatic cooling to maintain 75 degrees F in summer.

5. Electric power service.

6. Three telephone service lines one for voice, one for data, and one for fax, for exclusive use of authorized representatives of the City.

7. Sanitary facilities in field office with one water closet, one lavatory, and one medicine cabinet for exclusive use of authorized representatives of the City.

D. Minimum Furnishings:

1. One 5-drawer desk

2. Two swivel desk chairs with casters.

3. One plan table.

4. One drawing plan rack.

5. One 4-drawer legal file cabinet complete with fifty legal-size hanging folders and two full-sized carriers.

6. One marker board with cleaner and markers.

7. Two waste baskets.

8. One 30-inch by 36-inch tack board.

9. One all-purpose fire extinguisher.

10. Six protective helmets (hard hats) with ratchet adjustment for exclusive use of authorized representatives of the City.

11. Conference table and chairs to accommodate 10 persons.

12. All in one printer, copier, plain paper fax machine.

13. Telephone instrument separate from fax machine.

E. Provide adequate space for one set of Contract documents for ready reference.

PART 3 EXECUTION

3.01 MAINTENANCE

A Maintain all-weather surface driveway and parking areas, buildings, walkways, stairs and required furnishings and equipment for duration of the Contract.

B. Provide janitorial services for duration of the Contract consisting of twice weekly sweeping and mopping floors, trash removal, weekly restroom cleaning, and weekly dusting of furniture and equipment.

C. Provide soap, paper towels, toilet paper, cleansers and other necessary consumables.

D. Immediately repair damage, leaks or defective service.

3.02 PROJECT CLOSEOUT

A Remove temporary field office and signs and restore site as specified in Section 01770 - Closeout Procedures.

END OF SECTION

Section 01555

TRAFFIC CONTROL AND REGULATION

PART 1 GENERAL

1.01 SECTION INCLUDES

A. Requirements for signs, signals, control devices, traffic barriers, flares, lights and traffic signals; construction parking control, designated haul routes, and bridging of trenches and excavations.

B. Qualifications and requirements for use of flagmen.

1.02 MEASUREMENT AND PAYMENT

A. Unit Price Contracts.

1. Traffic control and regulation. Payment for traffic control and regulation is on a lump sum basis. Include preparation and submittal of traffic control plan if different than shown on Drawings, and provision of traffic control devices, equipment, and personnel necessary to protect the Work and public. Payment will be based on Contractor's Schedule of Values for traffic control and regulation.

2. Payment for traffic control will be authorized by Project Manager in three (3) parts. Partial payment will be made according to following schedule:

   a. Payment of 25 percent of traffic control amount will be authorized when permanent control devices and necessary temporary markings, sufficiently deployed along job site as required to maintain progress of work, are installed at job site and approved. This limiting percentage will be prorated based upon extent of Contractor's setup.

   b. A payment of 50 percent of traffic control amount will be authorized when pavement replacement commences. This limiting percentage will be prorated based upon linear footage, as measured along centerline axis of water main, of pavement replaced.

   c. A payment of 25 percent of traffic control amount will be authorized when permanent pavement markings are restored and all unnecessary permanent and temporary control devices removed. This limiting percentage will be prorated based upon the extent of restoration.

3. Flagmen: Measurement is on a lump sum basis for flagmen as required for the project. The amount invoiced shall be determined based on the schedule of value submitted for flagmen.

4. New Portable Concrete Low Profile Traffic Barrier Provided. Payment is on a unit price basis for each linear foot of low profile traffic barrier provided, installed with hardware assemblies and connected together in accordance with the approved traffic control plan.

5. Portable Concrete Low Profile Traffic Barrier picked up from City of Houston Stockpile. Payment is on a unit price basis for each linear foot of low profile traffic barrier picked up from designated stockpile, moved onto the project, set at location and connected together.

6. Portable Concrete Low Profile Traffic Barrier Installed. Payment is on a unit price basis for each linear foot of low profile traffic barrier delivered to the project location, installed with hardware assemblies and connected together in accordance with the approved traffic control plan.

7. Portable Concrete Low Profile Traffic Barrier Moved and Reset. Payment is on a unit price basis for each linear foot of low profile traffic barrier disassembled, moved on the project, reset at the new locations and connected together. Include cost to repair roadway in the unit price.

8. Portable Concrete Low Profile Traffic Barrier Removed. Payment is on a unit price basis for each linear foot of low profile traffic barrier removed from the project, including hardware assemblies, and stockpiling at location listed in Section 01110 – Summary of Work. Include cost to repair roadway in the unit price.

9. Refer to Section 01270 - Measurement and Payment for unit price procedures.

B. Stipulated Price Contracts. Include payment for work under this section in the total Stipulated Price.

1.03 REFERENCES

A. Texas Manual on Uniform Traffic Control Devices (TMUTCD)

B. Article 4413 (29bb), commonly referred to as Private Investigators and Private Security Agencies Act, and Article 2.12, Texas Code of Criminal Procedure.

C. Code of Ordinances, City of Houston, Texas.

1. Chapter 10 Buildings And Neighborhood Protection, Article X Cleanup After Demolition Or Removal Of Structures

2. Chapter 40 Streets and Sidewalks, Article XVII Pedestrian Way Impairments

1.04 SUBMITTALS

A. Conform to requirements of Section 01330 - Submittal Procedures.

B. Traffic control plan:

1. If using traffic control plan contained in the Contract without modification, submit a letter confirming use of the plan.

2. If using a different traffic control plan, submit the plan for approval. The plan must conform to TMUTCD requirements and be sealed by a Registered Texas Professional Engineer.

C. Submit copies of approved lane closure permits issued by City Traffic Engineering Branch.

D. Submit Schedules of Values for traffic control plan and flagmen within 30 days following Notice to Proceed.

E. Submit records verifying qualifications of Uniformed Peace Officers and Certified Flagmen proposed for use on the Work.

F. When working in the central business district, submit copies of approved Pedestrian Way permits issued by the City's Traffic Engineering Branch.

1.05 FLAGMEN

A. Use Uniformed Peace Officers and Certified Flagmen to control movement of vehicular and pedestrian traffic when construction operations encroach on public traffic lanes. Unless otherwise approved by Project Manager, use Uniformed Peace Officer for work along major thoroughfares, schools, churches, hospitals and Work at signalized intersections.

B. Uniformed Peace Officer: Individual employed full-time as a peace officer who receives separate compensation as a privately employed flagman. Private employment may be an employee-employer relationship or on an individual basis. Flagman may not be in the employ of another peace officer nor be a reserve peace officer.

1. Uniformed Peace Officers may be:

   a. sheriffs and their deputies;

   b. constables and deputy constables;

   c. marshals or police officers of an incorporated city, town or village; or

   d. as otherwise provided by Article 2.12, Code of Criminal Procedure.

2. The Uniformed Peace Officer must be a full-time peace officer, must work a minimum average of 32 paid hours per week, and must be paid a rate not less than the prevailing minimum hourly wage rate set by the federal Wage and Hour Act. The individual must be entitled to vacation, holidays, and insurance and retirement benefits.

C. Certified Flagman: Individual who receives compensation as a flagman and meets the following qualifications:

1. Formally trained and certified in traffic control procedures by the City s E. B. Cape Center.

2. Speaks English. Ability to speak Spanish is desirable but not required.

3. Paid for flagman duty at an hourly rate not less than the wage rate set for Rough Carpenter under the City's Wage Scale for Engineering Construction.

D. Certified Flagmen must wear a distinctive uniform, bright-colored vest, and be equipped with appropriate flagging and communication devices while at the Work site. They must also have in their possession while on duty, a proof of training identification card issued by the appropriate training institute.

PART 2 PRODUCTS

2.01 SIGNS, SIGNALS, AND DEVICES

A. Comply with TMUTCD requirements.

B. Traffic cones and drums, flares and lights: Conform to local jurisdictions' requirements.

C. When working in the Central business district, provide pedestrian pathway

signage approved by the City's Traffic Engineering Branch.

2.02 PORTABLE LOW PROFILE CONCRETE BARRIERS

A. The low profile concrete barrier is a patented design. Information concerning this barrier may be obtained from Texas Transportation Institute, Texas A&M University System, College Station, Texas 77843-3135, (409) 845-1712.

PART 3 E X E C U T I O N

3.01 PUBLIC ROADS

A. Submit requests forms for lane closure and sidewalk closure to the City's Traffic Engineering Branch at least three working days prior to need for blocking vehicular lanes or sidewalks. Do not block lanes or sidewalks without approved permits. Obtain application from the City's Traffic Engineering Branch at 611 Walker, 5th floor or at the following internet address: http://www.ci.houston.tx.us/pwe/mrow/laneclosure.htm.

B. Follow laws and regulations of governing jurisdictions when using public roads. Pay for and obtain permits from jurisdiction before impeding traffic or closing lanes. Coordinate activities with Project Manager.

C. Give Project Manager one-week notice before implementing approved traffic control phases. Inform local businesses of impending traffic control activities.

D. Notified police department, fire department, METRO, and local schools, churches, and businesses in writing a minimum of five business days prior to beginning work.

E. Maintain 10-foot wide all-weather lanes adjacent to the Work for emergency vehicle use. Keep all-weather lanes free of construction equipment and debris.

F. Do not to obstruct normal flow of traffic from 7:00 a.m. to 9:00 a.m. and 4:00 p.m. to 6:00 p.m. on designated major arterials or as directed by Project Manager.

G. Maintain local driveway access to residential and commercial properties adjacent to work areas at all times. Use all-weather materials approved by Project Manager to maintain temporary driveway access to commercial and residential driveways.

H. Keep streets entering and leaving job site free of excavated material, debris, and foreign material resulting from construction operations in compliance with

applicable ordinances.

I. Remove existing signage and striping that conflict with construction activities or that may cause driver confusion.

J. Provide safe access for pedestrians along major cross streets.

K. Alternate closures of cross streets so that two adjacent cross streets are not closed simultaneously.

L. Do not close more than two consecutive esplanade openings at a time without prior approval from Project Manager.

3.02 CONSTRUCTION PARKING CONTROL

A. Control vehicular parking to prevent interference with public traffic and parking, access by emergency vehicles, and the City's operations.

B. Monitor parking of construction personnel's vehicles in existing facilities. Maintain vehicular access to and through parking areas.

C. Prevent parking on or adjacent to access roads or in non-designated areas.

3.03 FLARES AND LIGHTS

A. Provide flares and lights during hours of low visibility to delineate traffic lanes and to guide traffic.

3.04 HAUL ROUTS

A. Utilize haul routes designated by authorities or shown on drawings for construction traffic.

B. Confine construction traffic to designated haul routes.

C. Provide traffic control at critical areas of haul routes to regulate traffic and minimize interference with public traffic.

3.05 TRAFFIC SIGNS AND SIGNALS

A. Construct necessary traffic control devices for temporary signals required to complete the Work including loop detectors, traffic signal conduits, traffic signal wiring and crosswalk signals. Notify the City's Traffic Engineering Branch a minimum of 60 days in advance of need for control boxes and switchgear. The City will perform necessary service, programming or adjustments, to signal boxes and switchgear if required during construction.

B. Install and operate traffic control signals to direct and maintain orderly traffic flow in areas under Contractor's control affected by Contractor's operations. Post notices, signs and traffic controls before moving into next phase of traffic control.

C. Relocate traffic signs and signals as the Work progresses to maintain effective traffic control.

D. Unless otherwise approved by Project Manager, provide driveway signs with name of business that can be accessed from each crossover. Use two signs for each crossover.

E. Replace existing traffic control devices in Project area.

F. Project Manager may direct Contractor to make minor adjustments to traffic control signage to eliminate driver confusion and maintain orderly traffic flow during construction at no additional cost to the City.

3.06 BRIDGING TRENCHES AND EXCAVATIONS

A. When necessary, construct bridges over trenches and excavation to permit an unobstructed flow of traffic across construction areas and major drives. Use steel plates of sufficient thickness to support H-20 loading and install to operate with minimum noise.

B. Shore trench or excavation to support bridge and traffic.

C. Secure bridging against displacement with adjustable cleats, angles, bolts or other devices when:

1. bridging is placed over existing bus routes,

2. more than five percent of daily traffic is comprised of commercial or truck traffic,

3. more than two separate plates are used for bridging, and

4. when bridge is to be used for more than five consecutive days.

D. Extend steel plates used for bridging a minimum of 1 foot beyond edges of trench or excavation. Use temporary paving materials such as premix to feather edges of plates to minimize wheel impact on secured bridging.

3.07 REMOVAL

A. Remove equipment and devices when no longer required.

B. Repair damage caused by installation.

C. Remove post settings to a depth of 2 feet.

3.08 TRAFFIC CONTROL, REGULATION AND DIRECTION

A. Use Flagmen to control, regulate and direct an even flow and movement of vehicular and pedestrian traffic, for periods of time as may be required to provide for public safety and convenience, where:

1. multi-lane vehicular traffic must be diverted into single lane vehicular traffic,

2. vehicular traffic must change lanes abruptly,

3. construction equipment must enter or cross vehicular traffic lanes and walks,

4. construction equipment may intermittently encroach on vehicular traffic lanes and unprotected walks and crosswalk,

5. traffic regulation is needed due to rerouting of vehicular traffic around the Work site, and

6. where construction activities might affect public safety and convenience.

B. Use of Flagmen to assist in the regulation of traffic flow and movement does not relieve Contractor of responsibility to take other means necessary to protect the Work and public.

3.09 INSTALLATION STANDARDS

A. Place temporary pavement for single lane closures, in accordance with TMUTCD.

B. Reinstall temporary and permanent pavement markings as approved by Project Manager. When weather conditions do not allow application according to manufacturer's requirements, alternate markings may be considered. Submit proposed alternate to Project Manager for approval prior to installation. No additional payment will be made for use of alternate markings.

3.10 MAINTENANCE OF EQUIPMENT AND MATERIAL

A. Submit name, address and telephone number of individual designated to be

responsible for maintenance of traffic handling at construction site to Project Manager. Individual must be accessible at all times to immediately correct deficiencies in equipment and materials used to handle traffic including missing, damaged, or obscured signs, drums, barricades, or pavement markings.

B. Inspect signs, barricades, drums, lamps and temporary pavement markings daily to verify that they are visible, in good working order, and conform with traffic handling plans as approved by Project Manager. Immediately repair, clean, relocate, realign, or replace equipment or materials that are not in compliance.

C. Keep equipment and materials, signs and pavement markings, clean and free of dust, dirt, grime, oil, mud, or debris.

D. Obtain approval of Project Manager to reuse damaged or vandalized signs, drums, and barricades.

END OF SECTION

Section 01570

STORM WATER POLLUTION PREVENTION CONTROL

PART 1 GENERAL

1.01 SECTION INCLUDES

A. Implementation of Storm Water Pollution Prevention Plans (SWP3) described in Section 01410 – TPDES Requirement.

B. Installation, maintenance and removal, of storm water pollution prevention structures: diversion dikes, interceptor dikes, diversion swales, interceptor swales, down spout extenders, pipe slope drains, paved flumes and level spreaders. Structures are used during construction and prior to final development of the site.

C. Filter Fabric Barriers:

1. Type 1: Temporary filter fabric barrier for erosion and sediment control in non-channelized flow areas.

2. Type 2: Temporary reinforced filter fabric barrier for erosion and sediment control in channelized flow areas.

D. Hay Bale Fence.

E. Drop Inlet Basket

F. Inlet Sediment Traps

G. Brush Berm

H. Sand Bag Barrier

I. Bagged Gravel Barrier

J. Sediment Basin

K. Inlet Protection Barrier

1.02 MEASUREMENT AND PAYMENT

A. UNIT PRICES

1. Payment for filter fabric barrier is on a linear foot basis measured between limits of beginning and ending of stakes.

2. Payment for reinforced filter fabric barrier is on a linear foot basis measured between limits of beginning and ending of stakes.

3. Payment for drop inlet baskets is on a unit price basis for each drop inlet basket.

4. Payment for storm inlet sediment traps is on a unit price basis for each storm inlet sediment trap.

5. Payment for storm water pollution prevention structures is on a lump sum basis for the project. Earthen structures with outlet and piping include diversion dikes, interceptor dikes, diversion swales, interceptor swales, and excavated earth-outlet sediment trap, embankment earth-outlet sediment trap, down spout extenders, pipe slope drains, paved flumes, stone outlet sediment trap, and level spreaders.

6. Payment for hay bale barrier, if included in Document 00410 - Bid Form, is on a linear foot of accepted bale barriers, if not include in cost of storm water pollution prevention structures.

7. Payment for brush berm, if included in Document 00410 - Bid Form, is on a linear foot of accepted brush berm, if not include in cost of storm water pollution prevention structures.

8. Payment for sandbag barrier, if included in Document 00410 - Bid Form, is on a linear foot basis measured between limits of beginning and ending of sandbags, if not include in cost of storm water pollution prevention structures.

9. Payment for bagged gravel barrier, if included in Document 00410 - Bid Form, is on a linear foot basis measured between limits of beginning and ending of bagged gravel barrier, if not include in cost of storm water pollution prevention controls.

10. Payment for inlet protection barriers, if included in Document 00410 - Bid Form, is on a linear foot basis measured along outside face of inlet protection barrier, if not include in cost of storm water pollution prevention structures.

11. Refer to Section 01270 - Measurement and Payment for unit price procedures.

B. Stipulated Price (Lump Sum) Contract. If Contract is Stipulated Price Contract, payment for Work in this Section is included in total Stipulated

1.03 REFERENCE STANDARDS

A. ASTM

1. A 36 – Standard Specification for Carbon Structural Steel.

2. D698 – Standard Test Methods for Laboratory Compaction Characteristics of Soil Using Standard Effort (12,400 ft-lbf/ft3 (600kN-m/m3)).

3. D3786 – Standard Test Method for Hydraulic Bursting Strength for knitted Goods and Nonwoven Fabrics.

4. D 4355 - Standard Test Method for Deterioration of Geotextiles from Exposure to Ultraviolet Light and Water (Xenon-Arc Type Apparatus).

5. D 4491 - Standard Test Methods for Water Permeability of Geotextiles by Permittivity.

6. D 4632 - Standard Test Method for Grab Breaking Load and Elongation of Geotextiles.

7. D 4833 - Standard Test Method for Index Puncture Resistance of Geotextiles, Geomembranes, and Related Products.

8. D 6382 - Standard Practice for Dynamic Mechanical Analysis and Thermogravimetry of Roofing and Waterproofing Membrane Material.

B. Storm Water Management Handbook for Construction Activities prepared by City of Houston, Harris County and Harris County Flood Control District.

1.04 SYSTEM DESCRIPTIONS

A. Filter Fabric Barrier Type 1 and Type 2: Install to allow surface or channel runoff percolation through fabric in sheet-flow manner and to retain and accumulate sediment. Maintain Filter Fabric Barriers to remain in proper position and configuration at all times.

B. Hay Bale Fence: Install to allow surface runoff percolation through hay in sheet-flow manner and to retain and accumulate sediment. Maintain Hay Bale Fence to remain in proper position and configuration at all times.

C. Interceptor Dikes and Swales: Construct to direct surface or channel runoff around the project area or runoff from project area into sediment traps.

D. Drop Inlet Baskets: Install to allow runoff percolation through the basket and to retain and accumulate sediment. Clean accumulation of sediment to prevent clogging and backups.

E. Sediment Traps: Construct to pool surface runoff from construction area to allow sediment to settle onto the bottom of trap.

F. Sand Bags: Are used during construction activities in unstabilized minor swales, ditches, or streambeds when the contributing drainage area is no greater than 2 acres. It is also sediment barrier for stage one Inlet.

G. Bagged Gravel Barrier: Are used during construction activities in unstabilized minor swales, ditches, or streambeds when the contributing drainage area is no greater than 2 acres. It is also sediment barrier for stage two Inlet.

H. Drop Inlet Insert Basket: Is a temporary barrier placed within a storm drain inlet (Lower Portion of Stage I and Upper Portion of Stage II Inlets) consisting of a filter fabric supported by a metal frame work to prevent sediment and other pollutants from entering convey system.

I. Brush Berm: Brush Berm is constructed at the perimeter of a distribute site within the developing area.

1.05 SUBMITTALS

A. Conform to requirements of Section 01330 - Submittal Procedures.

B. Submit manufacturer's literature for product specifications and installation instructions.

C. Submit manufacturers catalog sheets and other product data on geotextile or filter fabrics, outlet pipe, perforated riser and connectors.

D. Submit proposed methods, equipment, materials, and sequence of operations for storm-water pollution prevention structures.

E. Submit shop drawings for Drop Inlet Baskets.

PART 2 P R O D U C T S

2.01 CONCRETE

A. Concrete: Class B in accordance with Section 03315 – Concrete for Utility Construction or as shown on the Drawings.

2.02 AGREGATE MATERIALS

A. Use poorly graded cobbles with diameter greater than 3 inches and less than 5 inches.

B. Provide gravel lining in accordance with Section 2320 – Utility Backfill Materials or as shown on the drawings.

C. Provide clean cobbles and gravel consisting of crushed concrete or stone. Use clean, hard crushed concrete or stone free from adherent coatings, salt, alkali, dirt, clay, loam, shale, soft or flaky materials, or organic matter.

D. Sediment Pump Pit Aggregate: Use nominal 2-inch diameter river gravel.

2.03 PIPE

A. Polyethylene culvert pipe or PVC sewer pipe in accordance with Section 02505- High Density Polyethylene (HDPE) Solid and Profile Wall Pipe and Section 02506 Polyvinyl Chloride Pipe or as shown on the Drawings.

B. Inlet Pipes: Galvanized steel pipe in accordance with Section 02642 Corrugated Metal Pipe or as shown on the Drawings.

C. Standpipe for Sediment Pump Pits: Galvanized round culvert pipe or round PVC pipe, minimum of 12-inch and a maximum of 24-inch diameter, perforate at 6 to 12 inch centers around circumference.

2.04 GEOTEXTILE FILTER FABRIC

A. Woven or nonwoven geotextile filter fabric made of either polypropylene, polyethylene, ethylene, or polyamide material, in continuous rolls of longest practical length.

B. Grab Strength: 100 psi in any principal direction (ASTM D-4632), Mullen burst strength >200 psi (ASTM D-3786), and equivalent opening size between 50 and 140.

C. Furnish ultraviolet inhibitors and stabilizers for minimum 6 months of expected usable construction life at temperature range of 0 degrees F to 120 degrees F.

D. Mirafi, Inc., Synthetic Industries, or equivalent

2.05 BARRIER

A. Wire Barrier: Woven galvanized steel wire, 14 gauge by 6-inch square mesh spacing, minimum 24 inch roll or sheet width of longest practical length.

B. Barrier Stakes: Nominal 2 by 2 inch moisture-resistant treated wood or steel posts (min. of 1.25 lbs. per linear foot and Brinell Hardness greater than 140) with safety caps on top; length as required for minimum 8 inch bury and full

height of filter fabric.

2.06 SANDBAGS

A. Provide woven material made of polypropylene, polyethylene, or polyamide material.

1. Minimum unit weight of four ounces per square yard.

2. Minimum grab strength of 100 lbs in any principal direction (ASTM D4632)

3. Mullen burst strength exceeding 300 lbs (ASTM D4833).

4. Ultraviolet stability exceeding 70 percent. After 500 hours of exposure (ASTM 4355).

5. Size: Length:18 to 24 inches. Width: 12 to 18 inches. Thickness: 6 to 8 inches. Weight: Approximately 40 to 50 pounds not to exceed 75 pounds.

2.07 Bagged gravel Barrier

1. Minimum unit weight of four ounces per square yard.

2. Minimum grab strength of 100 lbs in any principal direction (ASTM D4632)

3. Mullen burst strength exceeding 300 lbs (ASTM D4833).

4. Ultraviolet stability exceeding 70 percent. After 500 hours of exposure (ASTM 4355).

5. Size: Length:18 to 24 inches. Width: 12 to 18 inches. Thickness: 6 to 8 inches. Weight: Approximately 40 to 50 pounds not to exceed 75 pounds.

2.08 DROP INLET BASKET

A. Provide steel frame members in accordance with ASTM A36.

B. Construct top frame of basket with two short sides of 2 inch by 2 inch and single long side of 1 inch by 1 inch, 1/8 inch angle iron. Construct basket hangers of 2 inch by 1/4 inch iron bars. Construct bottom frame of 1 inch by 1/4 inch iron bar or 1/4 inch plate with center 3 inches removed. Use minimum 1/4 inch diameter iron rods or equivalent for sides of inlet basket.

Weld minimum of 14 rods in place between top frame/basket hanger and bottom frame. Exact dimensions for top frame and insert basket will be determined based on dimensions of type of inlet being protected.

2.09 HAY BALE

A. Hay: Standard-baled agricultural hay bound by wire, nylon, or polypropylene rope. Do not use jute or cotton binding.

B. Hay Bale Stakes (applicable where bales are on soil): No. 3 (3/8 diameter) reinforcing bars, deformed or smooth at Contractor's option, length as required for minimum 18 inch bury and full height bales.

PART 3 E X E C U T I O N

3.01 PREPARATION, INSTALLATION AND MAINTEINANCE

A. Provide erosion and sediment control structures at locations shown on the Drawings.

B. Do not clear, grub or rough cut until erosion and sediment control systems are in place unless approved by Project Manger to allow installation of erosion and sediment control systems, soil testing and surveying.

C. Maintain existing erosion and sediment control systems located within project site until acceptance of Project or until directed by Project Manger to remove and discard existing system.

D. Regularly inspect and repair or replace damaged components of erosion and sediment control structures. Unless otherwise directed, maintain erosion and sediment control structure until project area stabilization is accepted. . Redress and replace granular fill at outlets as needed to replenish depleted granular fill. Remove erosion and sediment control structures promptly when directed by Project Manger. Dispose of materials in accordance with Section 01576 - Waste Material Disposal.

E. Remove and dispose sediment deposits at the designated spoil site for the Project. If a project spoil site is not designated on Drawings, dispose of sediment off site at approved location in accordance with Section 01576 - Waste Material Disposal.

F. Unless otherwise shown on the Drawings, compact embankments, excavations, and trenches in accordance with Section 02315 Roadway

Excavation or Section 2317 Excavation and Backfill for Utilities.

G. Prohibit equipment and vehicles from maneuvering on areas outside of dedicated right of way and easements for construction. Immediately repair damage caused by construction traffic to erosion and sediment control structures.

H. Protect existing trees and plants in accordance with Section 1562 – Tree and Plant Protection.

3.02 SEDIMENT TRAPS

A. Install sediment traps so that surface runoff shall percolate through system in sheet flow fashion and allow retention and accumulation of sediment.

B. Inspect sediment traps after each rainfall, daily during periods of prolonged rainfall, and at a minimum once each week. Repair or replace damaged sections immediately.

C. Use fill material for embankment in accordance with Section 02320 – Utility Backfill Materials.

D. Excavation length and height shall be as specified on Drawings. Use side slopes of 2:1 or flatter.

E. Stone outlet sediment traps:

1. Maintain minimum of 6 inches between top of core material and top of stone outlet, minimum of 4 inches between bottom of core material and existing ground and minimum of 1 foot between top of stone outlet and top of embankment.

2. Embed cobbles minimum of 4 inches into existing ground for stone outlet. Core shall be minimum of 1 foot in height and in width and wrapped in triple layer of geotextile filter fabric.

F. Sediment Basin with Pipe Outlet Construction Methods: Install outlet pipe and riser as shown on the Drawings.

G. Remove sediment deposits when design basin volume is reduced by one-third or sediment level is one foot below principal spillway crest, whichever is less.

3.03 FILTER FABRIC BARRIER CONSTRUCTION METHODS

A. Fence Type 1: Filter Fabric: Barrier

1. Install stakes 3 feet on center maximum and firmly embed minimum 8 inches in soil. If filter fabric is factory preassembled with support netting, then maximum support spacing is 8 feet. Install wood stakes at a slight angle toward the source of anticipated runoff.

2. Trench in the toe of the fence lines so the downward face of the trenches is flat and perpendicular to direction of flow. V-trench configuration as shown on Drawings may also be used.

3. Lay fabric along edges of trenches in longest practical continuous runs to minimize joints. Make joints only at a support post. Splice with minimum 6-inch overlap and seal securely.

4. Staple filter fabric to stakes at maximum 3 inches on center. Extend fabric minimum 18 inches and maximum 36 inches above natural ground.

5. Backfill and compact trench.

B. Barrier Type 2: Reinforced Filter Fabric Barrier

1. Layout barrier same as for Type 1.

2. Install stakes at 6 feet on center maximum and at each joint in wire fence, firmly embedded 1-foot minimum, and inclined it as for Type 1.

3. Tie wire fence to stakes with wire at 6 inches on center maximum. Overlap joints minimum one bay of mesh.

4. Install trench same as for Type 1.

5. Fasten filter fabric wire fence with tie wires at 3 inches on center maximum.

6. Layout fabric same as for Type 1. Fasten to wire fence with wire ties at 3 inches on center maximum and, if applicable, to stakes above top of wire fence it as for Type 1.

7. Backfill and compact trench.

8. Attach filter fabric to wooden fence stakes spaced a maximum of 6 feet apart or steel fence stakes spaced a maximum of 8 feet apart and embedded a minimum of 12 inches. Install stakes at a slight angle toward source of anticipated runoff.

9. Trench in toe of filter fabric barrier with spade or mechanical trencher so that downward face of trench is flat and perpendicular to direction of flow. A V-trench configuration may also be used. Lay filter fabric along edges of trench. Backfill and compact trench upon completion of Construction.

10. Filter fabric fence shall have a minimum height of 18 inches and a maximum height of 36 inches above natural ground.

11. Cut length of fence to minimize use of joints. When joints are necessary, splice fabric together only at support post with minimum 6 inch overlap and seal securely.

12. When used in swales, ditches or diversions, elevation of barrier at top of filter fabric at flow line location in channel shall be lower than bottom elevation of filter fabric at ends of barrier or top of bank, whichever is less, in order to keep storm water discharge in channel from overtopping bank.

C. Triangular Filter Fabric Barrier Construction Methods

1. Attach filter fabric to wire fencing, 18 inches on each side. Provide a fabric cover and skirt with continuous wrapping of fabric. Skirt should form continuous extension of fabric on upstream side of fence.

2. Secure triangular fabric filter barrier in place using one of the following methods:
   a. Toe-in skirt 6 inches with mechanically compacted material;
   b. Weight down skirt with continuous layer of 3-inch to 5-inch graded rock; or
   c. Trench-in entire structure 4 inches.

3. Anchor triangular fabric filter barrier structure and skirt securely in place using 6-inch wire staples on 2-foot centers on both edges and on skirt, or staked using 18-inch by 3/8-inch diameter re-bar with tee ends.

4. Lap fabric filter material by 6 inches to cover segment joints. Fasten joints with galvanized shoat rings.

3.04 DIKE AND SWALE

A. Unless otherwise indicated, maintain minimum dike height of 18 inches, measured from cleared ground at up slope toe to top of dike. Maintain side slopes of 2:1 or flatter.

B. Dike and Swale Stabilization: When shown on the Drawings, place gravel lining 3 inches thick and compacted into the soil or 6 inches thick if truck crossing is expected. Extend gravel lining across bottom and up both sides of swale minimum height of 8 inches vertically, above bottom. Gravel lining on dike side shall extend up the up slope side of dike a minimum height of 8 inches, measured vertically from interface of existing or graded ground and up slope toe of dike, as shown on Drawings.

C. Divert flow from dikes and swales to sediment basins, stabilized outlets, or sediment trapping devices of types and at locations shown on Drawings. Grade dikes and swales as shown on Drawings, or, if not specified, provide positive drainage with maximum grade of 1 percent to outlet or basin.

D. Clear in accordance with Section 2233 – Clearing and Grubbing Compact embankments in accordance with Section 2315 – Roadway Excavation.

E. Carry out excavation for swale construction so that erosion and water pollution is minimal. Minimum depth shall be 1 foot and bottom width shall be 4 feet, with level swale bottom. Excavation slopes shall be 2:1 or flatter. Clear, grub and strip excavation area of vegetation and root material.

3.05 DOWN SPOUT EXTENDER

A. Down spout extender shall have slope of approximately 1 percent. Use pipe diameter of 4 inches or as shown on the Drawings. Place pipe in accordance with Section 2317 - Bedding and Backfill for Utilities.

3.06 PIPE SLOPE DRAIN

A. Compact soil around and under drain entrance section to top of embankment in lifts appropriately sized for method of compaction utilized.

B. Inlet pipe shall have slope of 1 percent or greater. Use pipe diameter as shown on the Drawings.

C. Top of embankment over inlet pipe and embankments directing water to pipe shall be at least 1 foot higher at all points than top of inlet pipe.

D. Pipe shall be secured with hold-down grommets spaced 10 feet on centers.

E. Place riprap apron with a depth equal to pipe diameter with 2:1 side slopes.

3.07 PAVED FLUME

A. Compact soil around and under the entrance section to top of the embankment in lifts appropriately sized for method of compaction utilized.

B. Construct subgrade to required elevations. Remove and replace soft sections and unsuitable material. Compact subgrade thoroughly and shape to a smooth, uniform surface.

C. Construct permanent paved flumes in accordance with Drawings.

D. Remove sediment from riprap apron when sediment has accumulated to depth of one foot.

3.08 LEVEL SPREADER

A. Construct level spreader on undisturbed soil and not on fill. Ensure that spreader lip is level for uniform spreading of storm runoff.

B. Maintain at required depth, grade, and cross section as specified on Drawings. Remove sediment deposits as well as projections or other irregularities which will impede normal flow.

3.09 INLET PROTECTION BARRIER

A. Place sandbags for Stage I, Bagged gravel for Stage II and filter fabric barriers at locations shown on the SWP3. Maintain to allow minimal inlet in flow restrictions / blockage during storm event.

3.10 DROP INLET BASKET CONSTRUCTION METHODS

A. Fit inlet insert basket into inlet without gaps around insert at locations shown on the SWP3.

B. Support for inlet insert basket shall consist of fabricated metal as shown on Drawings.

C. Push down and form filter fabric to shape of basket. Use sheet of fabric large enough to be supported by basket frame when holding sediment and extend at least 6 inches past frame. Place inlet grates over basket/frame to serve as fabric anchor.

D. Remove sediment deposit after each storm event and whenever accumulation exceeds 1-inch depth during weekly inspections.

3.11 HAY BALE FENCE CONSTRUCTION METHODS

A. Place bales in row with ends tightly abutting adjacent bales. Place bales with bindings parallel to ground surface.

B. Embed bale in soil a minimum of 4 inches.

C. Securely anchor bales in place with Hay Bale Stakes driven through bales a minimum of 18-inches into ground. Angle first stake in each bale toward previously laid bale to force bales together.

D. Fill gaps between bales with straw to prevent water from channeling between bales. Wedge carefully in order not to separate bales.

E. Replace with new hay bale fence every two months or as required by Project Manager.

3.12 BRUSH BERM CONSTRUCTION METHODS

A. Construct brush berm along contour lines by hand placing method. Do not use machine placement of brush berm.

B. Use woody brush and branches having diameter less than 2-inches with 6-inches overlap. Avoid incorporation of annual weeds and soil into brush berm.

C. Use minimum height of 18-inches measured from top of existing ground at upslope toe to top of berm. Top width shall be 24 inches minimum and side slopes shall be 2:1 or flatter.

D. Embed brush berm into soil a minimum of 4-inches and anchor using wire, nylon or polypropylene rope across berm with a minimum tension of 50 pounds. Tie rope securely to 18-inch x 3/8-inch diameter rebar stakes driven into ground on 4-foot centers on both sides of berm.

3.13 STREET AND SIDEWALK CLEANING

A. Keep areas clean of construction debris and mud carried by construction vehicles and equipment. If necessary, install stabilized construction exits at construction, staging, storage, and disposal areas, following Section 01575-Stabilized Construction Exit.

B. In lieu of or in addition to stabilized construction exits, shovel or sweep pavements as required to keep areas clean. Do not waterhose or sweep debris and mud off street into adjacent areas, except, hose sidewalks during off-peak hours, after sweeping.

3.14 WASTE COLLECTION AREAS

A. Prevent water runoff from passing through waste collection areas, and prevent water runoff from waste collection areas migrating outside collection areas.

3.15 EQUIPMENT MAINTENANCE AND REPAIR

A. Confine maintenance and repair of construction machinery and equipment to areas specifically designated for that purpose, so fuels, lubricants, solvents, and other potential pollutants are not washed directly into receiving streams or storm water conveyance systems. Provide these areas with adequate waste disposal receptacles for liquid and solid waste. Clean and inspect maintenance areas daily.

B. Where designated equipment maintenance areas are not feasible, take precautions during each individual repair or maintenance operation to prevent potential pollutants from washing into streams or conveyance systems. Provide temporary waste disposal receptacles.

3.16 VEHICLE/ EQUIPMENT WASHING AREAS

A. Install wash area (stabilized with coarse aggregate) adjacent to stabilized construction access, as required to prevent mud and dirt run-off. Release wash water into drainage swales or inlets protected by erosion and sediment controls. Build wash areas following Section 01575- Stabilized Construction access. Install gravel or rock base beneath wash areas.

B. Wash vehicles only at designated wash areas. Do not wash vehicles such as concrete delivery trucks or dump trucks and other construction equipment at locations where runoff flows directly into waterways or storm water conveyance systems.

C. Locate wash areas to spread out and evaporate or infiltrate wash water directly into ground, or collect runoff in temporary holding or seepage basins.

3.17 WATER RUNOFF AND EROSION CONTROL

A. Control surface water, runoff, subsurface water, and water from excavations and structures to prevent damage to the Work, the site, or adjoining properties. Follow environment requirements.

B. Control fill, grading and ditching to direct water away from excavations, pits, tunnels, and other construction areas, and to direct drainage to proper runoff courses to prevent erosion, sedimentation or damage.

C. Provide, operate, and maintain equipment and facilities of adequate size to control surface water.

D. Retain existing drainage patterns external to the site by constructing temporary earth berms, sedimentation basins, retaining areas, and temporary ground cover as required to control conditions.

E. Plan and execute construction and earth work to control surface drainage from cuts and fills, and from borrow and waste disposal areas, to prevent erosion and sedimentation.

1. Hold area of bare soil exposed at one time to a minimum.

2. Provide temporary controls such as berms, dikes, and drains.

F. Construct fill and waste areas by selective placement to eliminate surface silts or clays which will erode.

G. Inspect earthwork periodically to detect start of erosion. Immediately apply corrective measures as required to control erosion.

H. Dispose of sediments offsite, not in or adjacent to waterways or floodplains, nor allow sediments to flush into streams or drainage ways. Assume responsibility for offsite disposal location.

I. Unless otherwise indicated, compact embankments, excavations, and trenches by mechanically blading, tamping, and rolling soil in maximum of 8-inch layers. Provide compaction density at minimum 90 percent Standard Proctor ASTM D-698-78 density. Make at least one test per 500 cubic yards of embankment.

J. Prohibit equipment and vehicles from maneuver on areas outside of dedicated rights-of-way and easements for construction. Immediately repair damage to erosion and sedimentation control systems caused by construction traffic.

K. Do not damage existing trees intended to remain.

3.18 REMOVAL OF CONTROLS

A. Remove erosion and sediment controls when the site is finally stabilized or as directed by Project Manager.

B. Dispose of sediments and waste products following Section 01505-Temporary Facilities.

END OF SECTION

Section 01575

STABILIZED CONSTRUCTION ACCESS

PART 1 GENERAL

1.01 SECTION INCLUDES

A. Installation and removal of erosion and sediment control for stabilized construction access used during construction and prior to final development of site, as shown in City of Houston Standard Construction details, DWG No. 01571-01.

1.02 MEASUREMENT AND PAYMENT

A. Unit Price Contracts. If Contract is Unit Price Contract, payment for work in this Section will be based on the following:

1. Stabilized construction roads, parking areas, access and wash areas: per square yard of aggregate/recycled concrete without reinforcing placed in 8-inch layers. No separate payment will be made for street cleaning necessary to meet TPDES requirements. Include cost of work for street cleaning under related Specification section.

B. Stipulated Price (Lump Sum) Contracts. If the Contract is a Stipulated Price Contract, include payment for work under this Section in the total Stipulated Price.

1.03 SUBMITTALS

A. Conform to requirements of Section 01330 - Submittal Procedures.

B. Submit manufacturer's catalog sheets and other Product Data on geotextile fabric.

C. Submit sieve analysis of aggregates conforming to requirements of this Specification.

1.04 REFERENCES

A. ASTM D 4632 - Standard Test Method for Grab Breaking Load and Elongation of Geotextiles.

B. Storm Water Quality Management Handbook For Construction Activities prepared by the City of Houston, Harris County and Harris County Flood Control District.

PART 2 PRODUCTS

2.01 GEOTEXTILE FABRIC

A. Provide woven or non-woven geotextile fabric made of polypropylene, polyethylene, ethylene, or polyamide material.

B. Geotextile fabric: Minimum grab strength of 200 lbs in any principal direction (ASTM D-4632) and equivalent opening size between 50 and 140.

C. Geotextile and threads: Resistant to chemical attack, mildew, and rot and contain ultraviolet ray inhibitors and stabilizers to provide minimum of six months of expected usable life at temperature range of 0 to 120 degrees F.

D. Representative Manufacturers: Mirafi, Inc. or equal.

2.02 COARSE AGGREGATES

A. Coarse aggregate: Crushed stone, gravel, crushed blast furnace slag, or combination of these materials. Aggregate shall be composed of clean, hard, durable materials free from adherent coatings of, salt, alkali, dirt, clay, loam, shale, soft or flaky materials, or organic and injurious matter.

B. Coarse aggregates to consist of open graded rock 2" to 8" in size.

PART 3 EXECUTION

3.01 PREPARATION AND INSTALLATION

A. Provide stabilized construction roads and access at construction, staging, parking, storage,
and disposal areas to keep street clean of mud carried by construction vehicles and equipment. Construct erosion and sediment controls in accordance with Drawings and Specification requirements.

B. Do not clear grub or rough cut until erosion and sediment control systems are in place, unless approved by Project Manager to allow soil testing and surveying.

C. Maintain existing construction site erosion and sediment control systems until acceptance of the Work or until removal of existing systems is approved by Project Manager.

D. Regularly inspect, repair or replace components of stabilized construction access. Unless otherwise directed, maintain stabilized construction roads and

access until the City accepts the Work. Remove stabilized construction roads and access promptly when directed by Project Manager. Discard removed materials off-site.

E. Remove and dispose of sediment deposits at designated spoil site for Project. If a spoil site is not designated on Drawings, dispose of sediment off-site at a location not in or adjacent to stream or flood plain. Assume responsibility for off-site disposal.

F. Spread compacted and stabilized sediment evenly throughout site. Do not allow sediment to flush into streams or drainage ways. Dispose of contaminated sediment in accordance with existing federal, state, and local rules and regulations.

G. Prohibit equipment and vehicles from maneuvering on areas outside of dedicated rights-of-way and easements for construction. Immediately repair damage to erosion and sediment control systems caused by construction traffic.

H. Conduct construction operations in conformance with erosion control requirements of Specification 01570 – Storm Water Pollution Control.

3.02 CONSTRUCTION MAINTENANCE

A. Provide stabilized access roads, subdivision roads, parking areas, and other on-site vehicle transportation routes where shown on Drawings.

B. Provide stabilized construction access and vehicle washing areas, when approved by Project Manager, of sizes and at locations shown on Drawings or as specified in this Section.

C. Clean tires to remove sediment on vehicles leaving construction areas prior to entering public right-of-ways. Construct wash areas needed to remove sediment. Release wash water into drainage swales or inlets protected by erosion and sediment control measures.

D. Details for stabilized construction access are shown on Drawings. Construct other stabilized areas to same requirements. Maintain minimum roadway widths of 14 feet for one-way traffic and 20 feet for two-way traffic and of sufficient width to allow ingress and egress. Place geotextile fabric as a permeable separator to prevent mixing of coarse aggregate with underlaying soil. Limit exposure of geotextile fabric to elements between laydown and cover to a maximum 14 days to minimize potential damage.

E. Grade roads and parking areas to provide sufficient drainage away from stabilized areas. Use sandbags, gravel, boards, or similar materials to prevent sediment from entering public right-of-ways, waterways or

storm water conveyance systems.

F. Inspect and maintain stabilized areas daily. Provide periodic top dressing with additional coarse aggregates to maintain required depth. Repair and clean out damaged control systems used to trap sediment. Immediately remove spilled, dropped, washed, or tracked sediment from public right-of-ways.

G. Maintain lengths of stabilized areas as shown on Drawings or a minimum of 50 feet. Maintain a minimum thickness of 8 inches. Maintain minimum widths at all points of ingress or egress.

H. Stabilize other areas with the same thickness, and width of coarse aggregate required for stabilized construction access, except where shown otherwise on Drawings.

I. Stabilized areas may be widened or lengthened to accommodate truck washing areas when authorized by Project Manager.

J. Clean street daily before end of workday. When excess sediments have tracked onto streets, Project Manager may direct Contractor to clean street as often as necessary. Remove and legally dispose of sediments.

K. Use other erosion and sediment control measures to prevent sediment runoff during rain periods and non-working hours and when storm discharges are expected.

END OF SECTION

Section 01576

WASTE MATERIAL DISPOSAL

PART 1 GENERAL

1.01 SECTION INCLUDES

A. Disposal of waste material and salvageable material.

1.02 SUBMITTALS

A. Conform to requirements of Section 01330 - Submittal Procedures.

B. Submit copy of approved "Development Permit", as defined in Chapter 19 of Flood Plain Ordinance (City Ordinance Number 81-914 and Number 85-1705), prior to disposal of excess material in areas designated as being in "100-year Flood Hazard Area" within the City. Contact the City of Houston Flood Plain Manager, 3300 Main Street, at (713) 525-7605 for flood plain information.

C. Obtain and submit disposal permits for proposed disposal sites, if required by local ordinances.

D. Submit copy of written permission from property owner, with description of property, prior to disposal of excess material adjacent to Project. Submit written and signed release from property owner upon completion of disposal work.

E. Describe waste materials expected to be stored on-site and a description of controls to reduce Pollutants from these materials, including storage practices to minimize exposure of materials to storm water; and spill prevention and response measures in the Project's Storm Water Pollution Prevention Plan (SWPPP). Refer to Section 01410 – TPDES Requirements.

PART 2 PRODUCTS - Not Used

PART 3 EXECUTION

3.01 SALVAGEABLE MATERIAL

A. Excavated Material: When indicated on Drawings, load, haul, and deposit excavated material at location or locations shown on Drawings outside limits of Project.

B. Base, Surface, and Bedding Material: Load shell, gravel, bituminous, or other base and surfacing material designated for salvage into City trucks.

C. Pipe Culvert: Load culverts designated for salvage into City trucks.

D. Other Salvageable Materials: Conform to requirements of individual Specification Sections.

E. Coordinate loading of salvageable material on City trucks with Project Manager.

3.02 EXCESS MATERIAL

A. Remove and legally dispose of vegetation, rubble, broken concrete, debris, asphaltic concrete pavement, excess soil, and other materials not designated for salvage from job site.

B. Excess soil may be deposited on private property adjacent to Project when written permission is obtained from property owner. See Paragraph 1.02 D above.

C. Verify flood plain status of any proposed disposal site. Do not dispose of excavated materials in area designated as within 100-year Flood Hazard Area unless "Development Permit" has been obtained. Remove excess material placed in "100-year Flood Hazard Area" within the City, without "Development Permit", at no additional cost to the City.

D. Remove waste materials from site daily, in order to maintain site in neat and orderly condition.

END OF SECTION

Section 01578

CONTROL OF GROUND AND SURFACE WATER

PART 1 GENERAL

1.01 SECTION INCLUDES

A. Dewatering, depressurizing, draining, and maintaining trenches, shaft excavations, structural excavations and foundation beds in stable condition, and controlling ground water conditions for tunnel excavations.

B. Protecting work against surface runoff and rising floodwaters.

C. Trapping suspended sediment in the discharge form the surface and ground water control systems.

1.02 MEASUREMENT AND PAYMENT

A. UNIT PRICES

1. When noted, dewatering of trench or excavation during course of project shall be measured per linear foot and paid for at contract unit prices for dewatering, when directed to perform such work by Project Manager. Dewatering must be fully detailed in submittal and submittal must be approved prior to performing dewatering work before payment will be made for dewatering. No payment will be made for work unless directed to perform work by Project Manager.

2. Presence of a pump on project does not constitute dewatering for payment under bid item "Ground Water Control for Open Cut Construction."

3. Dewatering required during course of project to lower water table for other utility installation less than 24 inches in diameter, construction of structures, removal of standing water, surface drainage seepage, or to protect against rising waters or floods shall be considered incidental to Work unless otherwise noted.

4. No separate payment will be made for groundwater control associated with augering, tunnels or casing. Include cost in unit price for augering.

5. Refer to Section 01270 - Measurement and Payment for unit price procedures.

B. Stipulated Price (Lump Sum) Contract. If the Contract is a Stipulated Price Contract, include payment for work under this section in the total Stipulated

Price.

1.03 REFERENCES

A. ASTM D 698 - Standard Test Methods for Laboratory Compaction of Soils Using Standard Effort (12,400 ft-lbf/ft3 (600kN-m/m3)

B. Federal Regulations, 29 CFR Part 1926, Standards-Excavation, Occupational Safety and Health Administration (OSHA)

C. Storm Water Management Handbook for Construction Activities prepared by City of Houston, Harris County and Harris County Flood Control District.

1.04 DEFINITIONS

A. Ground water control system: system used to dewater and depressurize water-bearing soil layers.

1. Dewatering: lowering the water table and intercepting seepage that would otherwise emerge from slopes or bottoms of excavations, or into tunnels and shafts; and disposing of removed water. Intent of dewatering is to increase stability of tunnel excavations and excavated slopes, prevent dislocation of material from slopes or bottoms of excavations, reduce lateral loads on sheeting and bracing, improve excavating and hauling characteristics of excavated material, prevent failure or heaving of bottom of excavations, and to provide suitable conditions for placement of backfill materials and construction of structures and other installations.

2. Depressurization: includes reduction in piezometric pressure within strata not controlled by dewatering alone, necessary to prevent failure or heaving of excavation bottom or instability of tunnel excavations.

B. Excavation drainage: includes keeping excavations free of surface and seepage water.

C. Surface drainage: includes use of temporary drainage ditches and dikes and installation of temporary culverts and sump pumps with discharge lines necessary to protect Work from any source of surface water.

D. Monitoring facilities for ground water control system: includes piezometers, monitoring wells and flow meters for observing and recording flow rates.

1 05 PERFORMANCE REQUIREMENTS

A. Conduct subsurface investigations to identify groundwater conditions and to

provide parameters for design, installation, and operation of groundwater control systems. Submit proposed method and spacing of readings for review prior to obtaining water level readings.

B. Design ground water control system, compatible with requirements of Federal Regulations 29 CFR Part 1926 and Section 02260 - Trench Safety Systems, to produce following results:

1. Effectively reduce hydrostatic pressure affecting:

   a. Excavations

   b. Tunnel excavation, face stability or seepage into tunnels

2. Develop substantially dry and stable subgrade for subsequent construction operations

3. Preclude damage to adjacent properties, buildings, structures, utilities, installed facilities and other work

4. Prevent loss of fines, seepage, boils, quick condition, or softening of foundation strata

5. Maintain stability of sides and bottom of excavations

C. Provide ground water control systems that include single-stage or multiple-stage well point systems, eductor and ejector-type systems, deep wells, or combinations of these equipment types.

D. Provide drainage of seepage water and surface water, as well as water from other sources entering excavation. Excavation drainage may include placement of drainage materials, crushed stone and filter fabric, together with sump pumping.

E. Provide ditches, berms, pumps and other methods necessary to divert and drain surface water from excavation and other work areas.

F. Locate ground water control and drainage systems so as not to interfere with utilities, construction operations, adjacent properties, or adjacent water wells.

G. Assume sole responsibility for ground water control systems and for any loss or damage resulting from partial or complete failure of protective measures and settlement or resultant damage caused by ground water control operations. Modify ground water control systems or operations if they cause or threaten to cause damage to new construction, existing site improvements, adjacent property, adjacent water wells, or potentially contaminated areas. Repair damage caused by ground water control systems or resulting from

failure of system to protect property as required.

H. Install an adequate number of piezometers installed at proper locations and depths, necessary to provide meaningful observations of conditions affecting excavation, adjacent structures and water wells.

I. Install environmental monitoring wells at proper locations and depths necessary to provide adequate observations of hydrostatic conditions and possible contaminant transport from contamination sources into work area or ground water control system.

1.06 SUBMITTALS

A. Conform to requirements of Section 01330 - Submittals Procedures.

B. Submit Ground Water and Surface Water Control Plan for review by Project Manager prior to start of excavation work. Include the following:

1. Results of subsurface investigations and description of extent and characteristics of water bearing layers subject to ground water control

2. Names of equipment Suppliers and installation Subcontractors

3. Description of proposed ground water control systems indicating arrangement, location, depth and capacities of system components, installation details and criteria and operation and maintenance procedures

4. Description of proposed monitoring facilities indicating depths and locations of piezometers and monitoring wells, monitoring installation details and criteria, type of equipment and instrumentation with pertinent data and characteristics

5. Description of proposed filters including types, sizes, capacities and manufacturer's application recommendations

6. Design calculations demonstrating adequacy of proposed systems for intended applications. Define potential area of influence of ground water control operation near contaminated areas.

7. Operating requirements, including piezometric control elevations for dewatering and depressurization

8. Excavation drainage methods including typical drainage layers, sump pump application and other means

9. Surface water control and drainage installations

10. Proposed methods and locations for disposing of removed water

C. Submit following records upon completion of initial installation:

1. Installation and development reports for well points, eductors, and deep wells

2. Installation reports and baseline readings for piezometers and monitoring wells

3. Baseline analytical test data of water from monitoring wells

4. Initial flow rates

D. Submit the following records weekly during control of ground and surface water operations:

1. Records of flow rates and piezometric elevations obtained during monitoring of dewatering and depressurization. Refer to Paragraph 3.02, Requirements for Eductor, Well Points, or Deep Wells.

2. Maintenance records for ground water control installations, piezometers and monitoring wells

1.07 ENVIRONMENTAL REQUIREMENTS

A. Comply with requirements of agencies having jurisdiction.

B. Comply with Texas Commission on Environmental Quality regulations and Texas Water Well Drillers Association for development, drilling, and abandonment of wells used in dewatering system.

C. Obtain necessary permits from agencies with jurisdiction over use of groundwater and matters affecting well installation, water discharge, and use of existing storm drains and natural water sources. Since review and permitting process may be lengthy, take early action to obtain required approvals.

D. Monitor ground water discharge for contamination while performing pumping in vicinity of potentially contaminated sites.

PART 2 PRODUCTS

2.01 EQUIPMENT AND MATERIALS

A. Select equipment and materials necessary to achieve desired results for dewatering. Selected equipment and materials are subject to review by Project Manager through submittals required in Paragraph 1.06, Submittals.

B. Use experienced contractors, regularly engaged in ground water control system design, installation, and operation, to furnish and install and operate educators, well points, or deep wells, when needed

C. Maintain equipment in good repair and operating condition.

D. Keep sufficient standby equipment and materials available to ensure continuous operation, where required.

E. Portable Sediment Tank System: Standard 55-gallon steel or plastic drums, free of hazardous material contamination.

1. Shop or field fabricate tanks in series with main inlet pipe, inter-tank pipes and discharge pipes, using quantities sufficient to collect sediments from discharge water.

PART 3 EXECUTION

.J1 GROUND WATER CONTROL

A. Perform necessary subsurface investigation to identify water bearing layers, piezometric pressures and soil parameters for design and installation of ground water control systems. Perform pump tests, if necessary to determine draw down characteristics. Present results in the Ground Water and Surface Water Control Plan. submittal

B. Provide labor, material, equipment, techniques and methods to lower, control and handle ground water in manner compatible with construction methods and site conditions. Monitor effectiveness of installed system and its effect on adjacent property.

C. Install, operate, and maintain ground water control systems in accordance with the Ground Water and Surface Water Control Plan. Notify Project Manager in writing of changes made to accommodate field conditions and changes to Work. Provide revised drawings and calculations with notification.

D. Provide continuous system operation, including nights, weekends, and holidays. Arrange appropriate backup if electrical power is primary energy source for dewatering system.

E. Monitor operations to verify systems lower ground water piezometric levels at rate required to maintain dry excavation resulting in stable subgrade for

subsequent construction operations.

F. Depressurize zones where hydrostatic pressures in confined water bearing layers exist below excavations to eliminate risk of uplift or other instability of excavation or installed works. Define allowable piezometric elevations in the Ground Water and Surface Water Control Plan.

G. Removal of ground water control installations.

1. Remove pumping system components and piping when ground water control is no longer required.

2. Remove piezometers, including piezometers installed during design phase investigations and left for Contractor's use, upon completion of testing, as required in accordance with Part 3 of applicable specification.

3. Remove monitoring wells when directed by Project Manager.

4. Grout abandoned well and piezometer holes. Fill piping that is not removed with cement-bentonite grout or cement-sand grout.

H. During backfilling, maintain water level a minimum of 5 feet below prevailing level of backfill. Do not allow the water level to cause uplift pressures in excess of 80 percent of downward pressure produced by weight of structure or backfill in place. Do not allow water levels to rise into cement-stabilized sand until at least 48 hour after placement.

I. Provide uniform pipe diameter for each pipe drain run constructed for dewatering. Remove pipe drains when no longer required. If pipe removal is impractical, grout connections at 50-foot intervals and fill pipe with cement-bentonite grout or cement-sand grout after removal from service.

J. The extent of ground water control for structures with permanent perforated underground drainage systems may be reduced, for units designed to withstand hydrostatic uplift pressure. Provide a means to drain affected portions of underground systems, including standby equipment. Maintain drainage systems during construction operations.

K. Remove systems upon completion of construction or when dewatering and control of surface or ground water is no longer required.

L. Compact backfill to not less than 95 percent of maximum dry density in accordance with ASTM D 698.

M. Foundation Slab: Maintain saturation line at least 3 feet below lowest elevations where concrete is to be placed. Drain foundations in areas where

concrete is to be placed before placing reinforcing steel. Keep free from water for 3 days after concrete is placed.

3.02 REQUIREMENTS FOR EDUCTOR, WELL POINTS, OR DEEP WELLS

A. For aboveground piping in ground water control system, include a 12-inch minimum length of clear, transparent piping between each eductor well or well point and discharge header to allow visual monitoring of discharge from each installation.

B. Install sufficient piezometers or monitoring wells to show that trench or shaft excavations in water bearing materials are pre-drained prior to excavation. Provide separate piezometers for monitoring of dewatering and for monitoring of depressurization. Install piezometers and monitoring wells for tunneling as appropriate for selected method of work.

C. Install piezometers or monitoring wells at least one week in advance of the start of associated excavation.

D. Dewatering may be omitted for portions of under drains or other excavations, where auger borings and piezometers or monitoring wells show that soil is pre-drained by existing systems and that ground water control plan criteria are satisfied.

E. Replace installations that produce noticeable amounts of sediments after development.

F. Provide additional ground water control installations, or change method of control if, ground water control plan does not provide satisfactory results based on performance criteria defined by plan and by specifications. Submit revised plan according to Paragraph 1.06B.

3.03 SEDIMENT TRAPS

A. Install sediment tank as shown on approved plan.

B. Inspect daily and clean out tank when one-third of sediment tank is filled with sediment.

3.04 SEDIMENT SUMP PIT

A. Install sediment sump pits as shown on approved plan.

B. Construct standpipe by perforating 12 inch to 24-inch diameter corrugated metal or PVC pipe.

C. Extend standpipe 12 inches to 18 inches above lip of pit.

D. Convey discharge of water pumped from standpipe to sediment trapping device.

E. Fill sites of sump pits, compact to density of surrounding soil and stabilize surface when construction is complete.

3.05 EXCAVATION DRAINAGE

A. Use excavation drainage methods if well-drained conditions can be achieved. Excavation drainage may consist of layers of crushed stone and filter fabric, and sump pumping, in combination with sufficient ground water control wells to maintain stable excavation and backfill conditions.

3.06 MAINTENANCE AND OBSERVATION

A. Conduct daily maintenance and observation of piezometers or monitoring wells while ground water control installations or excavation drainage is operating at the site, or water is seeping into tunnels, and maintain systems in good operating condition.

B. Replace damaged and destroyed piezometers or monitoring wells with new piezometers or wells as necessary to meet observation schedules.

C. Cut off piezometers or monitoring wells in excavation areas where piping is exposed, only as necessary to perform observation as excavation proceeds. Continue to maintain and make specified observations

D. Remove and grout piezometers inside or outside of excavation area when ground water control operations are complete. Remove and grout monitoring wells when directed by Project Manager.

3.07 MONITORING AND RECORDING

A. Monitor and record average flow rate of operation for each deep well, or for each wellpoint or eductor header used in dewatering system. Also, monitor and record water level and ground water recovery. Record observations daily until steady conditions are achieved and twice weekly thereafter.

B. Observe and record elevation of water level daily as long as ground water control system is in operation, and weekly thereafter until Work is completed or piezometers or wells are removed, except when Project Manager determines more frequent monitoring and recording are required. Comply with Project Manager's direction for increased monitoring and recording and

take measures necessary to ensure effective dewatering for intended purpose.

3.08 SURFACE WATER CONTROL

A. Intercept surface water and divert it away from excavations through use of dikes, ditches, curb walls, pipes, sumps or other approved means. Requirement includes temporary works required to protect adjoining properties from surface drainage caused by construction operations.

B. Divert surface water and seepage water into sumps and pump it into drainage channels or storm drains, when approved by agencies having jurisdiction. Provide settling basins when required by agencies.

END OF SECTION

Section 01580

PROJECT IDENTIFICATION SIGNS

PART 1 G E N E R A L

1.01 SECTION INCLUDES

A. Project identification sign description.

B. Project sign installation.

C. Maintenance and removal of Project sign.

1.02 SYSTEM DESCRIPTION

A. Sign Construction: Construct signs of new materials in accordance with Standard Detail provided at the Pre-construction Conference.

B. Appearance: Maintain signs to present a clean and neat look throughout contract duration.

C. Sign Manufacturer: Experienced professional sign company.

D. Sign Placement: At locations shown in Drawings unless otherwise specified by Project Manager at pre-construction meeting.

1. Provide one sign at each end of a linear Project involving paving, overlay, sewer line, storm drainage, or water main construction located in rights-of-ways.

2. Provide one sign for site or building construction Contracts

3. Provide one sign at each site for Contracts with multiple sites.

4. Sign Relocation: As work progresses, relocate signs if directed by Project Manager in writing. Include cost for one relocation of post-mounted signs in Contract Price. Subsequent relocations, if directed by Project Manager in writing, will be subject to Change Order.

E. Skid-mounted signs: Use for projects with noncontiguous locations where work progresses from one location to another. Design skid structure to withstand a 60 mile-per-hour wind load to the face or back of sign using stakes, straps, or ballast. Contractor shall be responsible for security of signs at each site.

1.03 SUBMITTALS

A. Submit Shop Drawings under provisions of Section 01330 - Submittal procedures.

B. Show content, layout, lettering style, lettering size, and colors. Make sign and lettering to scale, clearly indicating condensed lettering, if used.

PART 2 P R O D U C T S

2.01 SIGN MATERIALS

A. Structure and Framing: Use new sign materials.

1. Sign Posts: 4-inch by 4-inch pressure treated wood posts, 9 feet long for skid mounting and 12 feet long minimum for in-ground mounting.

2. Skid Bracing: 2-inch by 4-inch wood framing material.

3. Skid Members: 2-inch by 6-inch wood framing material.

4. Fasteners:
   a. Galvanized steel.
   b. Attach sign to posts with 1/2-inch by 5-1/2 inch button head carriage bolts and secure with nuts and flat head washers.
   c. Cover button heads with white reflective film or paint to match sign background.
   d. Use metal brackets and braces and 3/4-inch wood screws to attach sign header.

B. Sign and Sign Header: 3/4-inch thick marine plywood. Use 4-foot by 8 -foot sheet for the sign and a single piece for the header to minimize joints. Do not piece wood sheets to fabricate sign face.

C. Paint and Primers: White industrial grade, fast-drying, oil-based paint with gloss finish for structural and framing members, sign, and sign header material surfaces. Paint all sign surfaces prior to adding adhesive applications.

D. Colors:

1. Sign Background: Reflective white 3M Scotchlite Engineer Grade, Pressure Sensitive Sheeting (White), or approved equal.

2. Border: For red border around area, which designates project name and project amount, use reflective red 3M Scotchlite Engineer Grade, Pressure Sensitive Sheeting (Red), or approved equal.

3. Sign Film: 3M Scotchcal Pressure Sensitive Films, or approved equal for legends, symbols, lettering, and artwork. Match colors to 3M Scotchcal Pressure Sensitive Films.

a.	Lettering Below Seal:	Black
b.	Lettering Above Project Name:	Vivid Blue
c.	Lettering on Blue Background:	White
d.	Background Behind Project Name:	Vivid Blue

E. City Seal: Project Manager will provide City seals to Contractor, as needed.

2.02 SIGN LAYOUT

A. Lettering:

1. Style, Size, and Spacing: Helvetica Regular lettering.

2. Condensed Style: Text may be condensed if needed to maintain sign composition.

B. Composition:

1. Lines with Standard Text
   a. Top line shall read "BUILDING TOGETHER FOR THE FUTURE".
   b. Use lower left below City Seal to list names and titles for Mayor, Controller and Council Members. Place as shown on Drawings with indicated size and spacing.
   c. Center telephone number of the Customer Response Center, "311", near the bottom of the area with the blue background.

2. Lines with Variable Text. Use blue background space for Project name and dollar amount.
   a. Project Manager will provide Project name and dollar amount of Project for preparation of sign. Center name on one or two lines, and dollar amount immediately below Project name, in area with blue background. Use condensed lettering if necessary.

03 LAYOUT AND COMPOSITION FOR HEADER

A. City of Houston Seal:

1. A space of approximately 24 inches in diameter is provided for the City seal, the top 6 inches of which extends above the sign on the sign header.

2. Construct sign header of same material as sign face. Cut material to match curve of the City seal.

3. Project Manager will provide the seal to be affixed to the sign by sign maker.

PART 3 EXECUTION

3.01 INSTALLATION

A. Install Project identification signs within seven days after Date of Commencement of the Work.

B. Erect signs at locations shown in Drawings unless otherwise designated by Project Manager at pre-construction meeting. Position sign so it is fully visible and readable to general public.

C. Erect sign level and plumb.

D. If mounted on posts, sink posts 3 to 4 feet below grade and stabilize posts to minimize lateral motion. Leave a minimum of 8 feet of post above existing grade for mounting of sign.

E. Erect sign so that top edge of sign is at a nominal 8 feet above existing grade.

3.02 MAINTENANCE AND REMOVAL

A. Keep signs and supports clean. Repair deterioration and damage.

B. Remove signs, framing, supports, and foundations to a depth of at least 2 feet upon completion of Project. Restore area to a condition equal to or better than before construction.

PROJECT No.: (FILE NO:)	CONTRACT No.:	REVIEWED BY:

*INSTRUCTIONS TO SIGN MAKER (LIST COMPANY NAME):		
QTY.	ACTION ITEMS:	
	Make new sign(s)	
	Follow City standards attached	
	Provide submittal (drawing) to the City for project sign showing content, layout, lettering style, lettering size, and colors	
VARIABLE TEXT		
Line 1	Project Name:	
Line 2	Project Amount (rounded to nearest $1000):	
ATTACHMENTS INCLUDED		
QTY.	SEALS / LOGOS	
	City of Houston - 24" diameter	
	STANDARDS	
	Standard Specification Section 01580 - Project Identification Signs	
	Standard Detail 01580-03 Construction Sign	

(Instructions on reverse.)

INSTRUCTIONS

Contractor produces this form. Contractor shall insert the information and provide the form to the sign maker with Contractor's purchase order.

List PROJECT No., (FILE No.), CONTRACT No., and name of City's Project Manager REVIEWED BY.

INSTRUCTIONS TO SIGN MAKER:

- Give COMPANY NAME of sign maker.
- Indicate QUANTITY of new signs to be made.
- Direction for sign maker to follow City Standards in making signs.
- Require submittals from sign maker, who provides Shop Drawing of Project sign showing content, layout, lettering style, lettering size, and colors.

VARIABLE TEXT:

- Give PROJECT NAME. Write it out in all caps and suggest line break. Lines are required.
- Give Project amount to be listed on sign. Round off to nearest $1000.

ATTACHMENTS INCLUDED:

- **Seals**

  City provides the quantity of City seals required one for each Project sign.

- **Standards**

  Contractor provides set of Standards to sign maker, including (Specification Section 01580 - Project Identification Signs, and Standard Detail No. 01580-03 - Construction Sign.

Section 01610

BASIC PRODUCT REQUIREMENTS

PART 1 GENERAL

1.01 SECTION INCLUDES

A. Requirements for transportation, delivery, handling, and storage of Products.

1.02 PRODUCTS

A. Products: Defined in Document 00700 – General Conditions. Does not include machinery and equipment used for preparation, fabrication, conveying and erection of the Work. Products may also include existing materials or components designated for reuse.

B. For material and equipment specifically indicated or specified to be reused in the work:

1. Use special care in removal, handling, storage and reinstallation, to assure proper function in completed work.

2. Arrange for transportation, storage and handling of products which require off-site storage, restoration or renovation. Include cost in unit price for related items.

C. When contract documents require that installation of work comply with manufacturer's printed Instructions, obtain and distribute copies of such instructions to parties involved in installation, including two copies to Project Manager. Maintain one set of complete instructions at job site during installation until completion.

D. Provide Products from the fewest number of manufacturers as practical, in order to simplify spare parts inventory and to allow for maximum interchangeability of components. For multiple components of the same size, type or application, use the same make and model of component throughout the Work.

1.03 TRANSPORTATION

A. Make arrangements for transportation, delivery, and handling of Products required for timely completion of the Work.

B. Transport and handle Products in accordance with manufacturer's instructions.

C. Consign and address shipping documents to proper party giving name of the Project and its complete street address. Shipments shall be delivered to

Contractor.

1.04 DELIVERY

A. Arrange deliveries of Products to accommodate short-term site completion schedules and in ample time to facilitate inspection prior to Installation. Avoid deliveries that cause lengthy storage or overburden of limit storage space.

B. Coordinate deliveries to avoid conflict with the Work and conditions at the site and to accommodate the following:

1. Work of other contractors or the City.

2. Limitations of storage space.

3. Availability of equipment and personnel for handling Products.

4. The City's use of premises.

C. Have Products delivered to the site in manufacturer's original, unopened, labeled containers.

D. Immediately upon delivery, inspect shipment to assure:

1. Product complies with requirements of the Contract.

2. Quantities are correct.

3. Containers and packages are intact; labels are legible.

4. Products are properly protected and undamaged.

1.05 PRODUCT HANDLING

A. Coordinate off-loading of Products delivered to the site. If necessary during construction, move and relocate stored Products at no additional cost to the City.

B. Provide equipment and personnel necessary to handle Products, including those provided by the City, by methods to prevent damage to Products or packaging.

C. Provide additional protection during handling as necessary to prevent breaking, scraping, marring, or otherwise damaging Products or surrounding areas.

D. Handle Products by methods to prevent over-bending or overstressing.

E. Lift heavy components only at designated lifting points.

F. Handle Products in accordance with manufacturer's recommendations.

G. Do not drop, roll, or skid Products off delivery vehicles. Hand-carry or use Suitable materials handling equipment.

1.06 STORAGAE OF PRODUCTS

A. Store and protect Products in accordance with manufacturer's recommendations and requirements of these Specifications.

B. Make necessary provisions for safe storage of Products. Place Products so as to prevent damage to any part of the Work or existing facilities and to maintain free access at all times to all parts of the Work and to utility service company installations in the vicinity of the Work. Keep Products neatly and compactly stored in locations that will cause minimum inconvenience to other contractors, public travel, adjoining owners, tenants, and occupants. Arrange storage in a manner so as to provide easy access for inspection.

C. Restrict storage to areas available on the site for storage of Products as shown on Drawings or approved by Project Manager.

D. Provide off-site storage and protection when on-site storage is not adequate. Provide addresses of, and access to, off-site storage locations for inspection by Project Manager.

E. Do not use lawns, grass plots, or other private property for storage purposes without written permission of owner or other person in possession or control of premises.

F. Protect stored Products against loss or damage.

G. Store in manufacturers' unopened containers.

H. Neatly, safely, and compactly stack Products delivered and stored along the line of the Work to avoid inconvenience and damage to property owners and general public, and maintain at least 3 feet clearance around fire hydrants. Keep public, private driveways and street crossings open.

I. Repair or replace damaged lawns, sidewalks, streets or other improvements to satisfaction of Project Manager. Total length that Products may be distributed along route of construction at one time is 1000 linear feet, unless otherwise approved in writing by Project Manager.

PART 2 P R O D U C T S - Not Used

RT 3 E X E C U T I O N - Not Used

END OF SECTION

Section 01630

PRODUCT SUBSTITUTION PROCEDURES

PART 1 G E N E R A L

1.01 SECTION INCLUDES

A. Options for making Product or process selections.

B. Procedures for proposing equivalent Products or processes, including pre-approved, pre-qualified, and approved Products or processes.

1.02 DEFINITIONS

A. Product: As defined in Document 00700 – General Conditions. Product does not include machinery and equipment used for production, fabrication, conveying, and erection of the Work. Products may also include existing materials or components designated for reuse.

B. Process: Any proprietary system or method for installing system components resulting in an integral, functioning part of the Work. For this Section, the word Products includes Processes.

1.03 SELECTION OPTIONS

A. Pre-approved Products: Construction products of certain manufacturers or Suppliers designated in Specifications as "pre-approved." The City maintains a list of pre-approved products. Pre-approved Products for this Project are designated as pre-approved in Specifications. Products of other manufacturers or suppliers are not acceptable for this Project and will not be considered under the submittal process for approving alternate products.

B. Pre-qualified Products: Construction products of certain manufacturers or Suppliers designated in Specifications as "pre-qualified." Pre-qualified Products for this Project are designated as pre-qualified in Specifications. Products of other manufacturers or suppliers are not acceptable for this Project and will not be considered under the submittal process for approving alternate products.

C. Approved Products: Construction products of certain manufacturers or Suppliers designated in Specifications followed by words "or approved equal." Approval of alternate products not listed in Specifications may be obtained through provisions for product options and substitutions in Document 00700 - General Conditions, and by following submittal procedures specified in

Section 01330- Submittal Procedures. The procedure for approval of alternate products is not applicable to pre-approved or pre-qualified products.

D. Product Compatibility: To the maximum extent possible, provide Products that are of the same type or function from a single manufacturer, make, or source. Where more than one choice is available, select Product that is compatible with other Products already selected, specified, or in use by the City.

1.04 CONTRACTOR'S RESPONSIBILITY

A. Responsibility related to Product options and substitutions is defined in Document 00700 - General Conditions.

B. Furnish information Project Manager deems necessary to judge equivalency of alternate Product.

C. Pay for laboratory testing, as well as any other review or examination costs, needed to establish equivalency between products in order to obtain information upon which Project Manager can base a decision.

D. If Project Manager determines alternate product is not equal to that named in Specifications, Furnish one of the specified Products.

1.05 CITY REVIEW

A. Use alternate Products only when approved in writing by Project Manager. Project Manager's determination regarding acceptance of proposed alternate Product is final.

B. Alternate Products shall be accepted if Products are judged by Project Manager to be equivalent to specified Product or to offer substantial benefit to the City.

C. The City retains the right to accept any Product deemed advantageous to the City, and similarly, to reject any product deemed not beneficial to City.

1.06 SUBSTITUTION PROCEDURE

A. Collect and assemble technical information applicable to the proposed Product to aid in determining equivalency as related to the approved Product specified.

B. Submit a written request for a construction Product to be considered as an alternate Product.

C. Submit Product information after the effective date of the Contract and within the time period allowed for substitution submittals given in Document 00700 - General Conditions. After the submittal period has expired, requests for alternate Products shall be considered only when specified Product becomes unavailable because of conditions beyond Contractor's control.

D. Submit five copies of each request for alternate Product approval. Include the following information:

1. Complete data substantiating compliance of proposed substitution with the Contract.

2. For Products:
   a. Product identification, including manufacturer's name and address.
   b. Manufacturer's literature with Product description, performance and test data, and reference standards.
   c. Samples, as applicable.
   d. Name and address of similar projects on which Product was used and date of installation. Include names of Owner, design consultant, and installing contractor.

3. For construction methods:
   a. Detailed description of proposed method.
   b. Drawings illustrating methods.

4. Itemized comparison of proposed substitution with Product or method specified.

5. Data relating to changes in Construction Schedule.

6. Relation to separate contracts, if any.

7. Accurate cost data on proposed substitution in comparison with Product or method specified.

8. Other information requested by Project Manager.

E. Approved alternate Products will be subject to the same review process as the specified Product would have been for Shop Drawings, Product Data, and Samples.

PART 2 P R O D U C T S - Not Used

PART 3 E X E C U T I O N - Not Used

END OF SECTION

Section 01725

FIELD SURVEYING

PART 1 GENERAL

1.01 QUALITY CONTROL

A. Conform to State of Texas laws for surveys requiring licensed surveyors. Employ a surveyor acceptable to Project Manager if required by the Contract.

1.02 MEASUREMENT AND PAYMENT

A. UNIT PRICES

1. No separate payment will be made for field surveying. Include cost in unit price for related items.

1.03 SUBMITTALS

A. Conform to requirements of Section 01330 - Submittal Procedures.

B. Submit name, address, and telephone number of Surveyor to Project Manager before starting survey work.

C. Submit documentation verifying accuracy of survey work on request.

D. Submit certificate signed by Surveyor, that elevations and locations of the Work are in conformance with the Contract.

1.04 PROJECT RECORD DOCUMENTS

A. Maintain a complete and accurate log of control and survey work as it progresses.

B. Prepare a certified survey setting forth dimensions, locations, angles, and elevations of construction and site work upon completion of foundation walls and major site improvements.

C. Submit record documents under provisions of Section 01785 - Project Record Documents.

1.05 EXAMINATION

A. Verify locations of survey control points prior to starting the Work.

B. Notify Project Manager immediately if any discrepancies are discovered.

1.06 SURVEY REFERENCE POINTS

A. The City will establish survey control datum as provided in Document 00700 - General Conditions and as indicated on Drawings. Inform Project Manager in Advance of time horizontal and vertical control points will be established so

verification deemed necessary by Project Manager may be done with minimum inconvenience to the City or Contractor.

B. Locate and protect survey control points prior to starting site work; preserve permanent reference points during construction.

C. Notify Project Manager a minimum of 48 hours before relocation of reference points is needed due to changes in grades or other reasons.

D. Promptly report loss or destruction of reference points to Project Manager.

E. Reimburse the City for cost of reestablishment of permanent reference points disturbed by construction operations.

1.07 SURVEY REQUIREMENTS

A. Utilize recognized engineering survey practices.

B. Establish a minimum of two permanent benchmarks on site, referenced to established control points. Record horizontal and vertical location data on Project record documents.

C. Establish elevations, lines and levels to provide quantities required for measurement and payment and for appropriate controls for the Work. Locate and lay out the following with appropriate instruments:

1. Site improvements including grading, fill and topsoil placement, utilities, and footings and slabs

2. Grid or axis for structures

3. Building foundation, column locations, and ground floor elevations

D. Periodically verify layouts.

PART 2 PRODUCTS - Not Used

PART 3 E X E C U T I O N - Not Used

END OF SECTION

Section 01731

CUTTING AND PATCHING

PART 1 GENERAL

1.01 SECTION INCLUDES

A. Cutting, patching and fitting of the Work or work under construction. Coordinating Installation or connection of the Work to existing facilities, or uncovering work for access, inspection or testing and related submittals.

1.02 MEASUREMENT AND PAYMENT

A. UNIT PRICES

1. No separate payment will be made for cutting and patching. Include cost in unit price for related items.

1.03 CUTTING AND PATCHING

A. Perform activities to avoid interference with facility operations and work of others in accordance with Document 00700 - General Conditions of Contract.

B. Execute cutting and patching, including excavation, backfill and fitting to:

1. Remove and replace defective work or work not conforming to Drawings and Specifications;

2. Take samples of installed work as required for testing;

3. Remove construction required to provide for specified alterations or additions to existing work;

4. Uncover work to allow inspection or reinspection by Project Manager or regulatory agencies having jurisdiction;

5. Connect uninstalled work to completed work in proper sequence;

6. Remove or relocate existing utilities and pipes that obstruct work;

7. Make connections or alterations to existing or new facilities;

8. Provide openings, channels, chases and flues and cut, patch, and finish; if required; or

9. Provide protection for other portions of the Work.

C. Restore existing work to a condition equal to or better than that which existed Prior to cutting and patching, and to standards required by Specifications.

D. Support, anchor, attach, match, trim and seal materials to work of others. Unless otherwise specified, Furnish and Install sleeves, inserts, and hangers required for execution of the Work.

E. Provide shoring, bracing and support necessary to maintain structural integrity and to protect adjacent work from damage during cutting and patching. Request written approval from Project Manager, before cutting structural members such as beams, anchors, lintels, or other supports. Follow approved submittals, as applicable.

F. Match new materials to existing materials by bonding, lapping, mechanically tying, anchoring or other effective means in order to prevent cracks and to minimize evidence of patching. Conceal effects of demolition and patching by blending new construction to existing surfaces. Avoid obvious breaks, joints or changes of surface appearance unless shown on Drawings or authorized by Project Manager.

)4 SUBMITTALS

A. Conform to requirements of Section 01330 - Submittal Procedures.

B. Submit a written request to Project Manager for consent to proceed, before conducting cutting operations that might affect structural integrity, design function, City operations, or work of another contractor.

C. Include the following in submittal:

1. Identification of Project

2. Description of affected work

3. Necessity for cutting

4. Effect on other work and on structural integrity

5. Describe the proposed work including:
   a. Scope of cutting and patching
   b. Contractor, Subcontractor or Supplier who will execute the work
   c. Proposed Products
   d. Extent of refinishing
   e. Schedule of operations

6. Alternatives to cutting and patching

D. When work conditions or schedules dictate the need for change of materials or methods, submit a written recommendation to Project Manager that includes:

1. conditions necessitating the change;

2. recommendations for alternative materials or methods; and

3. submittals required for proposed substitutions

E. Notify Project Manager in writing when work will be uncovered for observation. Do not begin cutting or patching operations until authorized by Project Manager.

1.05 CONNECTIONS TO EXISTING FACILITIES

A. Perform construction operations necessary to complete connections and tie-ins to existing facilities. Keep existing facilities in continuous operation unless otherwise permitted in the Specifications or approved in writing by Project Manager.

B. Coordinate interruption of service requiring connection to existing facilities with Project Manager. Do not bypass wastewater or sludge to waterways. Provide temporary pumping facilities to handle wastewater if necessary. Use temporary bulkheads to minimize disruption. Provide temporary power and piping to facilitate construction where necessary.

C. Submit a detailed schedule of proposed connections, including shut-downs and tie-ins. Include proposed time and date as well as anticipated duration of work. Coordinate the connection schedule with the construction schedule.

1. Submit specific times and dates to Project Manager at least 48 hours in advance of proposed work.

D. Procedures and Operations:

1. Operate existing pumps, valves and gates in required sequence under supervision of Project Manager. Do not operate valves, gates or other items of equipment without Project Manager's knowledge.

2. If possible, test equipment under operating conditions before making final tie-ins to connect equipment to existing facility.

3. Coordinate work and schedules. Notify Project Manger at least 48 Hours before shutdowns or bypasses are required.

PART 2 P R O D U C T S Not Used

PART 3 E X E C U T I O N Not Used

END OF SECTION

Section 01732

PROCEDURE FOR WATER VALVE ASSISTANCE

PART 1 G E N E R A L

1.01 SECTION INCLUDES

A. Operation of valves. City of Houston employees will operate existing valves. Contractor's employees may operate new valves included in the Project prior to acceptance by the City.

1.02 PROCEDURE

A. Perform activities listed in Exhibit A attached to this Section.

1.03 SUBMITTALS

A. Submit request for work order planning meetings in accordance with Exhibit A. Include information listed in Step 1 of Exhibit A, attached to this Section.

1.04 CANCELLATION

A. Contractor, Project Manager, or Public Utilities Division may cancel a scheduled valve assistance appointment at no extra cost or payment to Contractor. Contractor shall notify City's appointed Project Inspector ("Inspector") 24 hours in advance of cancellation. Inspector shall notify Central Operation Service (COS) immediately upon receipt of cancellation notice. Cancellation may be caused by bad weather, preparation work taking longer than anticipated, or unforeseen delays by one or more of the three parties.

PART 2 P R O D U C T S - Not Used

PART 3 E X E C U T I O N - Not Used

END OF SECTION

PAGE LEFT INTENTIONALLY BLANK

EXHIBIT A

PROCEDURE FOR VALVE ASSISTANCE

The following procedure will be used by Utility Maintenance Branch personnel when completing a service request from individual Contractors, through Inspector, for operation of existing water valves.

ROUTINE VALVE ASSISTANCE REQUEST (NON-EMERGENCY JOBS):

Step 1. a. When notified by Contractor, Inspector will schedule a work order planning meeting by calling Central Operation Service (COS) at **(713) 295-5521** and providing information shown below. The work order planning meeting shall be conducted a minimum of three days after the request; excluding weekends, holidays, inclement weather days, and the day of the call.

Location of Work (Street Intersection)	Project #
Project Description	Contractor (Company Name)
Job Superintendent's Name	Superintendent's Office #/Mobile #/Pager #
Contractor's Emergency Information	Name and Phone #/Mobile #/Pager #
Inspector/Senior Inspector	Name, Phone #/Mobile #/Pager #
Date & Time assistance is requested	

b. COS will create a work order for each wet connection, cut and plug, etc. that will be designated as a "Code 40" (Private Contractor).

c. COS will give Inspector the work order number. This work order number must be used as a reference in all communications regarding this request for Valve Assistance.

d. Valve personnel must have the work order number on their route sheet. When valve personnel arrive at the job site for the Work Order Planning Meeting between Inspector, Contractor, and Utility Maintenance valve personnel, they will verify the street intersection and work order number with the Inspector before beginning Work Order Planning Meeting.

e. During Work Order Planning Meeting, the work to be performed will be outlined and the actual date work will be performed will be mutually determined by Inspector, Contractor and City's Utility Maintenance Division valve personnel, based upon relevant factors such as preparatory work needed, customer requirements, etc.

f. Valve personnel will perform work specifically outlined in the work order requested. Also, Utility Maintenance Branch valve personnel will only operate existing water valves. Inspector must contact COS and request a new work order for additional work.

g. Valve personnel will contact the dispatcher and advise when the job is complete. Valve personnel will list all appropriate information on the Crew Activity Report.

Step 2. Should valve personnel not be able to keep an appointment to provide valve assistance, Utility Maintenance Branch will provide notification to appropriate Inspector by phone at least 24 hours prior, with that fact and rescheduling information, if available.

Step 3. Inspector will notify COS if valve personnel have not arrived at the site within 30 minutes of scheduled appointment. If Contractor is not ready when valve operator arrives to provide valve assistance, the City shall charge Contractor $50.00 per hour, starting 15 minutes after the scheduled appointment time, minimum one hour charge.

Step 4. Contractor will not be due delay claims or downtime if Utility Maintenance Branch has notified Inspector that they will not be able to provide valve assistance as scheduled.

Step 5. Test installed new valves in the presence of Inspector before substantial completion inspection is scheduled. Place new valves in open position on or before the Date of Substantial Completion.

Step 6. Project Manager will notify, in writing, Utility Maintenance Branch two months before the warranty expires to report any problems they have with new water lines. Project Manager will notify Contractor about these problems.

EMERGENCY REQUEST FOR VALVE ASSISTANCE PROCEDURE:

Step 1. When notified by Contractor, Inspector will request emergency Valve Assistance due to a broken line/service, etc. by calling COS at **(713) 295-5521** and providing the following information:

Location of Work (Street Intersection)
Project Description
Contractor (Company Name)
Job Superintendent's Name
Contractor's Emergency Information
Inspector/Senior Inspector
Date & Time assistance is requested

Project #
Superintendent's Office #/Mobile #/Pager #
Name and Phone #/Mobile #/Pager #
Name, Phone #/Mobile #/Pager #

Step 2. COS will create an emergency work order number and describe the work to be performed.

Step 3. COS will give Inspector the emergency work order number. Reference work order number in all communications regarding request for Valve Assistance.

Step 4. COS will contact designated valve personnel and assign emergency work order. Dispatcher will follow standard COS procedures if this situation occurs after normal working hours.

Step 5. Valve personnel must have the emergency work order number on the route sheet. When valve personnel arrive at the job site for emergency work, they will verify the street intersection and emergency work order number with Inspector prior to beginning work requested for operating existing water valves. Valve personnel will coordinate verification of street intersection and work order number with Inspector prior to performing work.

Section 01740

SITE RESTORATION

PART 1 G E N E R A L

1.01 SECTION INCLUDES

A. Restoration of site affected by the Work in public or private property, including pavement, esplanades, sidewalks, driveways, fences, lawns and landscaping.

1.02 MEASUREMENT AND PAYMENT

A. Unit Prices.

1. Payment for restoration of Project site disturbed by utility construction operations is on a linear foot basis. Measurement will be as provided for corresponding utility in each Specification section. No separate payment made for branch pipe, valves and, other associated work for utilities. Measurement for restoration with multiple utilities within the same right-of-way will be on a linear foot basis for only one utility.

2. No separate payment made for facility or roadway projects. Include cost in the surface improvements associated with the facility or roadway construction.

3. Payment includes required site restoration within the right-of-way or easement regardless of size or type of pipe, method of construction, paved or unpaved areas or thickness and width of pavement.

4. No separate payment made for site restoration for service connections under this Section. Include cost in appropriate utility section.

5. Refer to Section 01270 – Measurement and Payment for Unit Price procedures.

B. Stipulated Price (Lump Sum) Contracts. If Contract is Stipulated Price Contract, include payment for work under this section in total Stipulated Price.

1.03 DEFINITIONS

A. Phase: Locations identified on the plans and listed in Section 1110 – Summary of Work under Work Sequence.

B. Site Restoration: Replacement or reconstruction of Site Improvements located in rights-of-way, easements, public property, and private property affected or altered by the Work.

C. Site Improvement: Includes pavement, curbs and gutters, esplanades, sidewalks, driveways, fences, lawns, irrigation systems, landscaping, and other improvements in existence at the Project site before commencement of construction operations.

1.04 SUBMITTALS

A. Conform to requirements of Section 01330 - Submittal Procedures.

B. Schedule of testing, service connections, abandonment, backfill, and site restoration.

C. Sample of notices to residents outlining their responsibility for maintenance of site improvements adjacent to the Project that are not disturbed by construction operations

1.05 SCHEDULING

A. Schedule testing, service connections, abandonment, backfill and site restoration immediately following completion of pipe laying work or paving within each block or line segment.

B. Phased Construction:

1. Commencement of subsequent Phase will follow scheduling of site restoration of prior Phase. Limit work to a maximum of two Phases of the project.

C. Construction of Projects with no Phases listed in Section 01110- Summary of Work:

1. Complete site restoration prior to disturbing over 50% of total project linear feet or 2,000 linear feet, whichever is greater, of right-of-way or easement.

2. Limit work to a maximum of 50% of total project linear feet or 2,000 linear feet, whichever is greater, of right-of-way and easement. Commence work in additional right-of-way or easement after completion of site restoration.

PART 2 PRODUCTS

2.01 MATERIALS

A. Pavement, Sidewalks and Driveways: Materials specified in Section 02951 - Pavement Repair and Resurfacing.

B. Seeding and Sodding: Sod specified in Section 02922 - Sodding and Seed specified in Section 02921 - Hydromulch Seeding.

C. Trees, Shrubs and Plantings: Conform to requirements of Section 01562 – Tree and Plant Protection.

PART 3 EXECUTION

3.01 Preparatory Work

A. Provide cleanup and restoration crews to work closely behind pipe laying and roadway construction crews, and where necessary, during testing, service restoration, abandonment, backfill and surface restoration.

B. Water Lines: Unless otherwise approved by Project Manager, comply with the following:

1. Once Project Manager approves work within a Phase, immediately begin preparatory work for disinfection effort.

2. No later than three days after completing disinfection preparatory work, submit to City appropriate request for disinfection.

3. If City fails to perform initial disinfection of lines in accordance with Section 2514 - Disinfection of Water Lines, within seven days from submission of appropriate request, and if approved by Project Manager, pipe laying operations may continue beyond approved limits until the City responds.

4. Immediately after transfer of services, begin abandonment of old water lines and site restoration.

C. Wastewater Lines:

1. Once Project Manager approves work within a Line Segment, immediately begin preparatory work for testing effort.

2. No later than three days after completing preparatory work for testing, initiate testing work.

3. Immediately after transfer of service connections, begin abandonment of old wastewater lines, and site restoration.

D. Street Construction and Paving Projects

1. Once Project Manager approves work within a Line Segment or block, immediately begin preparatory work for testing effort.

2. No later than three days after completing preparatory work for testing, initiate testing work.

3. Immediately after testing begin site restoration.

E. Street Construction and Paving Projects

1. Once Project Manager approves work within a block, immediately begin preparatory work for sidewalk construction, sodding and hydromulching and tree planting.

2. No later than seven days after completing preparatory work, initiate construction.

3.02 CLEANING

A. Remove debris and trash to maintain a clean and orderly site in accordance with requirements of General Conditions and Section 01576 - Waste Material Disposal.

3.03 LANDSCAPING AND FENCES

A. Seeding and Sodding.

1. Remove construction debris and level area with bank sand so that new grass surface matches level of existing grass and maintains pre-construction drainage patterns. Level and fill minor ruts or depressions caused by construction operations with bank sand, where grass is still viable.

2. Restore previously existing turfed areas with sod and fertilize in accordance with Section 02922 - Sodding. Sod to match existing turf.

3. Restore unpaved areas not requiring sodding with hydromulch seeding conforming to Section 02921 - Hydromulch Seeding.

B. Trees, Shrubbery and Plants.

1. Remove and replant trees, shrubs, and plants in accordance with requirements of Section 01562 – Tree and Plant Protection.

C. Fence Replacement.

1. Replace removed or damaged fencing to equal or better condition than existed prior to construction, including concrete footings and mow strips. Provide new wood posts, top and bottom railing and panels. Metal fencing material, not damaged by the Work, may be reused.

2. Remove and dispose of damaged or substandard material.

3.04 MAINTENANCE

A. Maintain shrubs, plantings, sodded areas and seeded areas.

B. Replace shrubs, plantings and seeded or sodded areas that fail to become established.

C. Refer to Section 01562 - Tree and Plant Protection, Section 02921 - Hydromulch Seeding and Section 02922 - Sodding for maintenance requirements.

END OF SECTION

Section 01755

STARTING SYSTEMS

PART 1 GENERAL

1.01 SECTION INCLUDES

A. Starting systems.

B. Demonstration and instructions.

C. Testing, adjusting and balancing.

PART 2 PRODUCTS - Not Used

PART 3 EXECUTION

3.01 PREPARATION

A. Coordinate schedule for start-up of various equipment and systems.

B. Notify Project Manager seven days prior to startup of each item.

C. Verify each piece of equipment or system has been checked for proper lubrication, drive rotation, belt tension, control sequence, or other damage-causing conditions.

D. Verify tests, meter readings, and specified electrical characteristics agree with those required by equipment or system manufacturer.

E. Verify wiring and support components for equipment are complete and tested.

F. Execute start-up under supervision in accordance with manufacturer's instructions.

G. When specified in individual Specification sections, require manufacturer to provide an authorized representative to be present at the site to inspect, check and approve equipment or system installation prior to start-up, and to supervise placing equipment or system in operation.

H. Submit written report indicating that equipment or system has been properly installed and is functioning correctly.

3.02 DEMONSTRATION AND INSTRUCTIONS

A. Demonstrate operation and maintenance of Products to Project Manager two weeks prior to Date of Substantial Completion.

B. Utilize O&M Manuals as the basis for instruction. Review contents of manual with Project Manager in detail to explain aspects of operation and maintenance.

C. Demonstrate start-up, operation, control, adjustment, trouble-shooting, servicing, maintenance, and shutdown of each item of equipment at agreed-upon times, at the equipment location.

D. Prepare and insert additional data in O&M Manuals when the need for additional data becomes apparent during instruction.

E. At a minimum, Contractor will demonstrate the following:

1. Products and procedures to be used in maintaining various surfaces, e.g., counter tops, toilet partitions, tile floors and carpeting;

2. procedures to set and maintain landscape irrigation system;

3. procedures to set and maintain security and fire alarm systems; and

4. procedures to set and maintain HVAC systems.

3.03 TESTING, ADJUSTING AND BALANCING

A. Contractor shall appoint, employ and pay for the services of an independent firm to perform testing, adjusting and balancing.

B. Submit reports by the independent firm to Project Manager describing observations and results of tests and signifying compliance or non-compliance with specified requirements and requirements of the Contract.

END OF SECTION

Section 01770

CLOSEOUT PROCEDURES

PART 1 GENERAL

1.01 SECTION INCLUDES

A. Procedures to establish Date of Substantial Completion.

B. Closeout procedures for final submittals, O&M data, warranties, spare parts and maintenance materials.

C. Texas Department of Licensing and Regulation (TDLR) inspection for Texas Accessibility Standards (TAS) compliance.

1.02 SUBSTANTIAL COMPLETION

A. Comply with Document 00700 - General Conditions regarding Date of Substantial Completion when Contractor considers the Work, or portion thereof designated by Project Manager, to be substantially complete.

B. Insure the following items have been completed when included in the Work, prior to presenting a list of items to be inspected by Project Manager for issuance of a Certificate of Substantial Completion:

1. cutting, plugging, and abandoning of water, wastewater, and storm sewer lines, as required by Contract documents for each item;

2. construction of, and repairs to, pavement, driveways, sidewalks, and curbs and gutters;

3. sodding and hydromulch seeding, unless waived by Project Manager in writing;

4. general clean up including pavement markings, transfer of services, successful testing and landscape;

5. additional requirements contained in Section 01110 - Summary of Work.

C. Assist Project Manager with inspection of Contractor's list of items and complete or correct the items, including items added by Project Manager, within specified time period.

D. Should Project Manager's inspection show failure of Contractor to comply with requirements to obtain Date of Substantial Completion, including those items in Paragraph 1.02 B. of this section, Contractor shall complete or correct the items, before requesting another inspection by Project Manager.

1.03 CLOSEOUT PROCEDURES

A. Comply with Document 00700 - General Conditions regarding final completion and final payment when the Work is complete and ready for Project Manager's final inspection.

B. Provide Project Record Documents in accordance with Section 01785 - Project Record Documents.

C. Complete or correct items on punch list, with no new items added. Address new items during warranty period.

D. The City will occupy portions of the Work as specified in other sections.

1.04 FINAL CLEANING

A. Execute final cleaning prior to final inspection.

B. For facilities, clean interior and exterior glass and surfaces exposed to view; remove temporary labels, stains and foreign substances, polish transparent and glossy surfaces, vacuum carpeted and soft surfaces.

C. Clean equipment and fixtures to sanitary condition.

D. Clean or replace filters of operating equipment.

E. Clean debris from roofs, gutters, down spouts, and drainage systems.

F. Clean site; sweep paved areas, and rake clean landscaped surfaces.

G. Remove waste and surplus materials, rubbish, and temporary construction facilities from site following final test of utilities and completion of the Work.

1.05 ADJUSTING

A. Adjust operating equipment to ensure smooth and unhindered operation. Value of this testing and adjusting is five percent of Lump Sum Price in the Schedule of Values for item being tested.

1.06 OPERATION AND MAINTENANCE DATA

A. Submit O&M data as noted in Section 01330 - Submittal Procedures.

B. Five percent of lump sum amount of each piece of equipment as indicated in Schedule of Unit Price Work or Schedule of Values will be paid after the required O&M data submittals are received and approved by Project Manager.

1.07 WARRANTIES

A. Provide one original of each warranty from Subcontractors, Suppliers, and manufacturers.

B. Provide Table of Contents and assemble warranties in a 3-ring/D binder with durable plastic cover.

C. Submit warranties prior to final progress payment.

D. Warranties shall commence in accordance with the requirements in Document 00700 - General Conditions.

1.08 SPARE PARTS AND MAINTENANCE MATERIALS

A. Provide Products, spare parts, maintenance and extra materials in quantities specified in individual Specification sections.

B. Deliver to a location within the City limits as directed by Project Manager. Applicable items must be delivered prior to issuance of a final Certificate for Payment.

PART 2 P R O D U C T S - Not Used

PART 3 E X E C U T I O N - Not Used

END OF SECTION

SUPPLEMENTARY SPECIFICATION

Section 01782 S

OPERATIONS AND MAINTENANCE DATA

The following supplement modifies Specification Section 01782. Where a portion of the Specification is modified or deleted by this supplementary specification, the unaltered portions of the specification shall remain in effect.

1. Delete paragraph 1.03.B. and replace it with the following:

   B. Submit three (3) copies for review and six (6) copies final. All drawings larger than 11 inches x 17 inches shall include a reproducible sepia for review, mark-up and reproduction. Submit all documents in a 3-ring binder with durable plastic covers except for sepias. Provide a cover page that has minimum of 75% of the space available for approval stamps and comments.

2. Delete Paragraphs 1.03.F., G. and H. and replace with the following:

   F. Within one month prior to scheduling training of the owner's staff and prior to placing the equipment in service, submit three (3) copies of O&M manual and parts for review.

   G. Submit one copy of revised volumes, incorporating review comments, in final form 10 days prior to final inspection. One copy with Project Manager's comments will be returned after final inspection. Revise content of documents based on Project Manager's comments prior to final submittal.

   H. Revise and resubmit eight (8) final volumes within 15 days after final inspection.

   I. The Contractor is responsible for producing an O&M manual both written format and in electronic format on a CD ROM Drive. O&M print manual and CD ROM should be in latest version of Microsoft Word and on other industry standard software for viewing charts, graphics on other material that are not compatible with Microsoft Word. Contractor to supply the additional software other than Microsoft Word.

   The Contractor shall include as part of the O&M manual a video of the training, equipment maintenance, repair and service procedures for

electrical and SCADA equipment. This video shall be provided on the CD ROM for viewing with all necessary software.

J. Drinking Water Operations will provide the Contractor a Microsoft Excel template prior to substantial completion. The Contractor shall provide information in the database for any new assets and/or any assets removed from service. The database shall be submitted to Drinking Water Operations prior to final inspection.

END OF SUPPLEMENT

Approved By:

Sonny Do, P.E.
Acting Assistant Director
Water Engineering Section
Engineering and Construction Division

11/24/15
Date

Section 01782

OPERATIONS AND MAINTENANCE DATA

PART 1 GENERAL

1.01 SECTION INCLUDES

A. Submittal requirements for equipment and facility Operations and Maintenance (O&M) Manuals

1.02 MEASUREMENT AND PAYMENT

A. Measurement for equipment O&M Manuals is on a lump sum basis equal to five percent of the individual equipment value contained in Schedule of Unit Prices or Schedule of Values. The lump sum amount may be included in the first Progress Payment following approval of the O&M Manuals by Project Manager.

1.03 SUBMITTALS

A. Conform to requirements of Section 01330 - Submittal Procedures. Submit a list of O&M Manuals and parts manuals for equipment to be incorporated into the Work.

B. Submit documents with 8-1/2 x 11-inch text pages, bound in 3-ring/D binders with durable plastic covers.

C. Print "OPERATION AND MAINTENANCE INSTRUCTIONS", Project name, and subject matter of binder on covers when multiple binders are required.

D. Subdivide contents with permanent page dividers, logically organized according to the Table of Contents, with tab titling clearly printed under reinforced laminated plastic tabs.

E. O&M Manual contents: Prepare a Table of Contents for each volume, with each Product or system description identified.

1. Part 1 - Directory: Listing of names, addresses, and telephone numbers of Design Consultant, Contractor, Subcontractors, and major equipment Suppliers.

2. Part 2 - O&M instructions arranged by system. For each category, identify names, addresses, and telephone numbers of Subcontractors and Suppliers and include the following:
   a. Significant design criteria.
   b. List of equipment.
   c. Parts list for each component.
   d. Operating instructions.
   e. Maintenance instructions for equipment and systems.
   f. Maintenance instructions for special finishes, including recommended cleaning methods and materials and special precautions identifying detrimental agents.

3. Part 3 - Project documents and certificates including:
   a. Shop Drawings and relevant data.
   b. Air and water balance reports.
   c. Certificates.
   d. Photocopies of warranties.

F. Submit two copies of O&M Manuals and parts manuals, for review, within one month prior to placing the equipment or facility in service.

G. Submit one copy of completed volumes in final form 10 days prior to final inspection. One copy with Project Manager comments will be returned after final inspection. Revise content of documents based on Project Manager's comments prior to final submittal.

H. Revise and resubmit three final volumes within 10 days after final inspection.

1.04 EQUIPMENT O&M DATA

A. Furnish O&M Manuals, prepared by manufacturers for all equipment. Manuals must contain, as a minimum, the following:

1. Equipment functions, normal operating characteristics, and limiting conditions.

2. Assembly, Installation, alignment, adjustment, and checking instructions.

3. Operating instructions for start-up, normal operation, regulation and control, normal shutdown, and emergency shutdown.

4. Detailed drawings showing the location of each maintainable part and lubrication point with detailed instructions on disassembly and reassembly of the equipment.

5. Troubleshooting guide.

6. Spare parts list, predicted life of parts subject to wear, lists of spare parts recommended to be on hand for both initial start-up and for normal operating inventory, and local or nearest source of spare parts availability.

7. Outline, cross-section, and assembly drawings with engineering data and wiring diagrams.

8. Test data and performance curves.

B. Furnish parts manuals for all equipment, prepared by the equipment manufacturer, which contain, as a minimum, the following:

1. Detailed drawings giving the location of each maintainable part.

2. Spare parts list with predicted life of parts subject to wear, lists of spare parts recommended on hand for both initial start-up and for normal operating inventory, and local or nearest source of spare parts availability.

PART 2 P R O D U C T S - Not Used

PART 3 E X E C U T I O N - Not Used

END OF SECTION

SUPPLEMENTARY SPECIFICATION

Section 01785 S

PROJECT RECORD DOCUMENTS

The following supplement modifies Specification Section 01785. Where a portion of the Specification is modified or deleted by this supplementary specification, the unaltered portions of the specification shall remain in effect.

1. Delete paragraph 1.04.A. and replace it with the following:

   A. At contract closeout, deliver Project Record Documents to the City Engineer, and a master copy in electronic format of all electrical product/equipment maintenance and specification data, including a complete updated record set of shop drawings in AutoCAD format to the Electrical Reliability Project Manager.

   Note: Electronic format expressly referred to in this specification is all product data and specifications in any MS Office or flash animation format and all drawings in AutoCAD.

END OF SUPPLEMENT

Approved By:

Sonny Do, P.E.
Acting Assistant Director
Water Engineering Section
Engineering and Construction Division

11/24/15
Date

Section 01785

PROJECT RECORD DOCUMENTS

PART 1 GENERAL

1.01 SECTION INCLUDES

A. Maintenance and submittal of record documents and Samples.

1.02 MAINTENANCE OF DOCUMENTS AND SAMPLES

A. Maintain one record copy of documents at the site in accordance with Document 00700 - General Conditions.

B. Store record documents and Samples in field office, if a field office is required by the Contract, or in a secure location. Provide files, racks, and secure storage for record documents and Samples.

C. Label each document "PROJECT RECORD" in neat, large, printed letters.

D. Maintain record documents in a clean, dry, and legible condition. Do not use record documents for construction purposes. Do not use permit drawings to record Modifications to the Work.

E. Keep record documents and Samples available for inspection by Project Manager.

F. Bring record documents to progress review meetings for viewing by Project Manager and, if applicable, Design Consultant.

1.03 RECORDING

A. Record information legibly with red ink pen on a set of blueline opaque drawings, concurrently with construction progress. Maintain an instrument on site at all times for measuring elevations accurately. Do not conceal work until required information is recorded

B. Contract Drawings and Shop Drawings: Mark each item to record completed Modifications, or when minor deviations exist, the actual construction including:

1. Measured depths of elements of foundation in relation to finish first floor datum.
2. Measured horizontal locations and elevations of Underground Facilities and appurtenances, referenced to permanent surface improvements.

3. Elevations of Underground Facilities referenced to City of Houston benchmark utilized for the Work.

4. Measured locations of internal utilities and appurtenances concealed in construction, referenced to visible and accessible features of the Work.

5. Dimensions and details of field changes

6. Changes made by Modifications.

7. Details not on original Drawings.

8. References to related Shop Drawings and Modifications.

C. Survey all joints of water mains at the time of construction. Record on Drawings, water main invert elevation, elevation top of manway, and centerline horizontal location relative to baseline.

D. For large diameter water mains, mark specifications and addenda to record:

1. Manufacturer, trade name, catalog number and Supplier of each Product actually Installed.

2. Changes made by Modification or field order.

3. Other matters not originally specified.

E. Annotate Shop Drawings to record changes made after review.

1.04 SUBMITTALS

A. At closeout of the Contract, deliver Project record documents to Project Manager.

PART 2 P R O D U C T S - Not Used

PART 3 E X E C U T I O N - Not Used

END OF SECTION

Section 02221S

REMOVING EXISTING PAVEMENTS, STRUCTURES, WOOD, AND DEMOLITION DEBRIS

The following supplements modify Specification Section 02221 – Removing Existing Pavements, Structures, Wood, and Demolition Debris. Where a portion of the Specification or Detail is modified or deleted by this Supplementary Specification, the unaltered portions of the Specification shall remain in effect.

1.03 REGULATORY REQUIREMENTS: Add the following Paragraph C:

C. For removal of asbestos containing materials, or material that could potentially contain asbestos, comply with applicable provisions of OSHA 29 CFR 1926.1101 – Asbestos, OSHA 29 CFR 1926.32 – General Safety and Health Provisions, and EPA 40 CFR 61 Subpart M – National Emission Standard for Asbestos.

3.01 PREPARATION: Add the following Paragraph C:

C. For removal of asbestos containing materials, or materials that could potentially contain asbestos, comply with the following:

1. Crew members must be trained in accordance with OSHA 29 CFR 1926.1101 – Asbestos.
2. Conduct negative exposure assessment to demonstrate asbestos exposure below permissible exposure limit (PEL) in accordance with OSHA 29 CFR 1926.1101 – Asbestos and EPA 40 CFR 763 – Asbestos.
3. If negative exposure assessment not conducted, or if results are above PEL, provide respiratory protection in accordance with Paragraph 3.02 of this Section.

3.02 PROTECTION: Add the following Paragraph B:

B. When required, provide respiratory protection in accordance with OSHA 29 CFR 1910.134 – Respiratory Protection, and National Institute of Occupational Safety and Health (NIOSH).

3.03 REMOVALS: Add the following Paragraph G:

G. Labeling of Asbestos Cement (AC) Pipe:

1. Label leak-tight container with warning statement of hazardous asbestos content in accordance with OSHA 29 CFR 1926.1101 and as noted below.
2. Label waste material with following warning:

DANGER
CONTAINS ASBESTOS FIBERS
MAY CAUSE CANCER
CAUSES DAMAGE TO LUNGS
DO NOT BREATHE DUST
AVOID CREATING DUST

3. Neatly print labels in letters of sufficient size and contrast so label is easily visible and legible.

3.05 DISPOSAL: Add the following Paragraph C:

C. For asbestos-containing materials:

1. Comply with 40 CFR Part 61 and 30 TAC Sections 330.137(b) for Industrial Class 1 waste.
2. Inspect load to ensure correct packaging and labeling.
3. Line vehicles with two layers of 6-mil polyethylene sheeting.
4. Remove asbestos-containing waste from site daily.

END OF SUPPLEMENT

Approved by:

Mark L. Loethen, P.E., CFM, PTOE
City Engineer
Department of Public Works & Engineering

11/17/2012
Date

Section 02221

REMOVING EXISTING PAVEMENTS, STRUCTURES, WOOD, AND DEMOLITION DEBRIS

PART 1 GENERAL

1.01 SECTION INCLUDES

A. Removing concrete paving, asphaltic concrete pavement, brick pavement and base courses.

B. Removing concrete curbs, concrete curbs and gutters, sidewalks and driveways.

C. Removing pipe culverts, sewers, and sewer leads.

D. Removing waterlines and water services lines including asbestos cement pipe per OSHA guidelines.

E. Removing existing inlets and manholes.

F. Removing and disposing of pre-stressed concrete beams and drill shafts.

G. Removing miscellaneous structures of concrete or masonry.

H. Removing existing bridge.

I. Removing existing wood and demolition debris.

1.02 MEASUREMENT AND PAYMENT

A. Unit Prices.

1. Payment for removing and disposing of asphaltic surfacing with or without base, regardless of thickness encountered, is on square yard basis measured between lips of gutters.

2. Payment for removing and disposing of reinforced concrete pavement, with or without asphalt overlay, regardless of its thickness, is on square yard basis measured from back-to-back of curbs. Payment includes concrete pavement, esplanade curbs, curbs and gutters, and paving headers.

3. Payment for removing and disposing of cement stabilized shell base course, with or without asphaltic surfacing, is on square yard basis.

4. Payment for removing and disposing of concrete sidewalks and driveways is on square yard basis.

5. Payment for removing asphaltic pavement surface by milling shall be in accordance with Section 2960.

6. Payment for removing and disposing of miscellaneous concrete and masonry is on cubic yard basis of structure in place.

7. Payment for removing and disposing of pipe culverts, sewers, and sewer leads, is on linear foot basis for each diameter and each material type of pipe removed.

8. Payment for removing and disposing of waterlines and water service lines including asbestos cement pipe is on linear foot basis for each diameter pipe and each material type of pipe removed.

9. Payment for removing and disposing of existing inlets is on unit price basis for each inlet removed.

10. Payment for removing and disposing of prestressed concrete piles and drill shafts is on linear foot basis.

11. Payment for removing and disposing of existing bridge, including piles and abutments to minimum of 4 feet below ground level, is on a lump sum basis.

12. Payment for removing and disposing of existing manholes is on unit price basis for each manhole removed.

13. Payment for removing and disposing of miscellaneous wood and demolition debris is on cubic yard basis.

14. No payment for saw cutting of pavement, curbs, or curbs and gutters will be made under this section. Include cost of such work in unit prices for items listed in bid form requiring saw cutting.

15. No payment will be made for work outside maximum payment limits indicated on Drawings, or for pavements or structures removed for Contractor's convenience.

    a. For utility installations: Match actual pavement replaced but no greater than maximum pavement replacement limits shown on Drawings. Limits of measurement will be as shown on Street Cut Pavement Replacement Rules.

16. Refer to Section 01270 - Measurement and Payment for unit price procedures

B. Stipulated Price (Lump Sum). If Contract is Stipulated Price Contract, payment for work in this Section is included in total Stipulated Price.1.03 REGULATORY REQUIREMENTS

A. Conform to applicable codes for disposal of debris.

B. Coordinate removal work with utility companies.

PART 2 P R O D U C T S - Not Used
PART 3 E X E C U T I O N

3.01 PREPARATION

A. Obtain advance approval from Project Manager for dimensions and limits of removal work.

B. Identify known utilities below grade. Stake and flag locations.

3.02 PROTECTION

A. Protect following from damage or displacement:

1. Adjacent public and private property.

2. Trees, plants, and other landscape features designated to remain.

3. Utilities designated to remain.

4. Pavement and utility structures designated to remain.

5. Bench marks, monuments, and existing structures designated to remain.

3.03 REMOVALS

A. Remove pavements and structures by methods that will not damage underground utilities. Do not use drop hammer near existing underground utilities.

B. Minimize amount of earth loaded during removal operations.

C. Where existing pavement is to remain, make straight saw cuts in existing pavement to provide clean breaks prior to removal. Do not break concrete pavement or base with drop hammer unless concrete or base has been saw cut to minimum depth of 2 inches.

D. When street and driveway saw cut location is greater than one-half of pavement lane width, remove pavement for full lane width or to nearest longitudinal joint as directed by Project Manager.

E. Remove sidewalks and curbs to nearest existing dummy, expansion, or construction joint.

F. Where existing end of pipe culvert or end of sewer is to remain, install 8-inch-thick masonry plug in pipe end prior to backfill in accordance with requirements of Section 02316 - Excavation and Backfill for Structures.

3.04 BACKFILL

A. Backfill of removal areas shall be in accordance with requirements of Section 02316 - Excavation and Backfill for Structures.

3.05 DISPOSAL

A. Inlet frames, grates, and plates; and manhole frames and covers, may remain City property. Disposal shall be in accordance with requirements of Section 01576 - Waste Material Disposal.

B. Remove from site, debris resulting from work under this section in accordance with requirements of Section 01576 - Waste Material Disposal.

END OF SECTION

Section 02511S

WATER LINES

The following supplements modify Section 02511 - Water Lines Standard Specification. Where a portion of the Specification is modified or deleted by this Supplementary Specification, the unaltered portions of the Specification shall remain in effect.

1.02 MEASUREMENT AND PAYMENT: replace Paragraph 1.02 A. 1 with the following:

1. Payment for water lines installed by open- cut or trenchless construction or aerial crossing, with or without restrained joints, with or without casing, within limits of pipe offset section or within limits of Potentially Petroleum Contaminated Area (PPCA) or within limits of Fault Hazard Zone (FHZ) is on a linear foot basis for each size of pipe installed. Payment will include welded and restrained joints, for large diameter water lines. Separate pay items are used for each type of installation:

    a. Mains: Mains Measure along axis of pipe and include fittings and valves.

    b. Branch Pipe: Measure from axis of water line to end of branch.

Insert the following paragraph:

2.05 FLEXIBLE EXPANSION JOINTS:

A. Install Flexible Expansion Joints at locations indicated on drawings, within limits of Fault Hazard Zone, in accordance with the manufacturer's recommendations.

3.01 PREPARATION: Delete Paragraph I and replace with the following:

I. If asbestos-cement (A.C.) pipe is encountered, follow safety practices outlined in OSHA 29 CFR 1926.1101 – Asbestos. Refer to Section 02221 – Removing Existing Pavements, Structures, Wood, and Demolition Debris for removing and disposing of A.C. pipe.

END OF SUPPLEMENT

Approved by:

James T. Lincoln, P.E. Date 10/21/13
City Engineer
Department of Public Works & Engineering

Section 02511

WATER LINES

PART 1 GENERAL

1.01 SECTION INCLUDES

A. Installation of water lines.

B. Specifications identify requirements for both small diameter water lines and large diameter water lines. When specifications for large diameter water lines differ from those for small diameter water lines, large diameter specifications will govern for large diameter pipe.

1.02 MEASUREMENT AND PAYMENT

A. Unit Prices.

1. Payment for water lines installed by open-cut, trenchless construction with or without casing, aerial crossing, and pipe offset section or within limits of Potentially Petroleum Contaminated Area (PPCA) is on linear foot basis for each size of pipe installed. Separate pay items are used for each type of installation:

   a. Mains: Measure along axis of pipe and include fittings and valves.

   b. Branch Pipe: Measure from axis of water line to end of branch.

2. Payment for interconnection is on lump sum basis for each interconnection identified on Drawings. Payment will include tapping sleeve and valves piping, connections and other related work necessary for construction as shown on Drawings or specified herein.

3. Payment for removal of existing internal elliptical or dished head plug is on unit price basis for each internal elliptical or dished head plug removed. Payment will include deletion of plug, drainage or dewatering of water lines, repair of damaged linings, rechlorination and items incidental to operation.

4. Payment for plug and clamp is on a unit price basis for each size of pipe.

5. Payment for drainline connection with service manhole is on unit price basis for each drainline shown on drawings. Payment includes valve, access manhole and connection.

6. Payment for cylindrical corrosion barriers is on a unit price basis for each pipe fitting installed with one or more barriers.

7. When directed by Project Manager to install extra fittings as required to avoid unforeseen obstacles, payment will be based on the following:

   a. Each extra fitting requested by Project Manager and delivered to jobsite will be paid according to unit price for "Extra Fittings in Place."

   b. Payment will include and be full compensation for items necessary for installation and operation of water line.

8. Payment for pipe support structure, including pipe guards will be paid on a lump sum basis for each aerial crossings. Payment includes related work performed in accordance with related Sections.

9. No separate payment will be made for pavement removal and replacement of surface improvement necessary for augering, tunneling, or other trenchless methods of installation, unless shown on drawings.

10. Refer to Section 01270 - Measurement and Payment for unit price procedures.

B. Stipulated Price (Lump Sum). If Contract is Stipulated Price Contract, payment for work in this Section is included in total Stipulated Price.

1.03 REFERENCES

A. ANSI A 21.11/AWWA C111 - Standard for Rubber-Gasket Joints for Ductile - Iron Pressure Pipe and Fittings.

B. ANSI/NSF Standard 61 - Drinking Water System -Health Components.

C. ASTM A 36 - Standard Specification for Carbon Structural Steel

D. ASTM A 536 - Standard Specification for Ductile Iron Castings

E. ASTM A 126 - Standard Specification for Gray Iron Castings for Valves, Flanges, and Pipe Fittings.

F. ASTM B 21 - Standard Specification for Naval Brass Rod, Bar, and Shapes.

G. ASTM B 98 - Standard Specification for Copper-Silicon Alloy Rod, Bar, and Shapes.

H. ASTM B 301 - Standard Specification for Free-Cutting Copper Rod and Bar.

I. ASTM B 584 - Standard Specification for Copper Alloy Sand Casting for General Application.

J. ASTM E 165 - Standard Test Method for Liquid Penetrant Examination

K. ASTM E 709 - Standard Guide for Magnetic Particle Examination

L. ASTM F 1674 - Standard Test Method for Joint Restraint Products for Use with PVC Pipe.

M. AWWA C 206 - Standard for Field Welding of Steel Water Pipe.

N. AWWA C 207 - Standard for Steel Pipe Flanges for Waterworks Service - Sizes 4 Inches through 144 Inches.

1.04 SUBMITTALS

A. Conform to requirements of Section 01330 - Submittal Procedures.

B. Conform to submittal requirements of applicable Section for type of pipe used.

C. Photographs: Submit photographs conforming to requirements of Section 01321 - Construction Photographs prior to commencement of construction.

D. Submit Lone Star notification transmittal number prior to beginning excavation.

E. Submit, a minimum of 15 days before beginning pipe laying operations, layout drawing identifying proposed sections for disinfecting, hydrostatic testing and site restoration for entire project for review and approval. Layout drawing to identify sequence of sections for:

1. Disinfection according to the following criteria:

   a. 2,000 linear feet for small diameter pipelines (20-inches in diameters or smaller)
   b. 4,000 linear feet for large diameter pipelines (24-inches in diameters or larger)

2. Hydrostatic testing and transfer of services; to immediately follow sequence of disinfected section.

3. Site restoration; not to exceed limits specified; Sequence in order of disturbance.

F. For pipe with bell-and-spigot ends with rubber gasket, submit complete joint details with dimensions and tolerances and performance history indicating the proposed joint has performed satisfactorily under similar conditions.

PART 2 PRODUCTS

2.01 PIPE MATERIALS

A. Install pipe materials which conform to following:

1. Section 02501 - Ductile Iron Pipe and Fittings.

2. Section 02502 - Steel Pipe and Fittings. Water line piping within plant site and aerial crossings to be welded joint steel pipe with flange or approved restraint joint connections, unless otherwise shown on Drawings.

3. Section 02506 - Polyvinyl Chloride Pipe.

4. Section 02507 - Prestressed Concrete Cylinder Pipe.

5. Section 02518 - Steel Pipe and Fittings for Large Diameter Water Lines.

6. Section 02613 - Bar-Wrapped Steel Cylinder Pipe.

B. Conform to American National Standards Institute/National Sanitation Foundation (ANSI/NSF) Standard 61 and have certified by an organization accredited by ANSI.

C. Type of pipe materials used is Contractor's option unless specifically identified on Drawings.

D. Provide minimum of 3/8 inch inside joint recess between ends of pipe in straight pipe sections.

E. Pipe Manufacturer: Performance history shall be minimum 5 years of successful field installations with proposed pipe diameter and proposed type of pipe joint. In absence of 5-year performance history for proposed pipe diameter, the following items shall be required for review by Project Manager prior to approval:

a. Quality Assurance Program: Submit certified quality assurance program addressing all aspects of pipe manufacturing process, including coating and lining applications. Certified program shall be ISO 9001; 2000 or other equivalent industry standard nationally recognized program.

b. Hydrostatic Joint Test: Perform hydrostatic test of proposed joint at proposed pipe diameter in presence of Project Manager. Test duration shall be minimum 8 hours at 150 psi with no leakage, with pipe cylinder deflected at joint to 3% of nominal diameter, with maximum allowable joint engagement deflection.

c. Provide minimum four (4) weeks notice to Project Manager for hydrostatic joint test. Submit test procedures to Project Manager for approval.

Project Manager's decision as to acceptability of joint is final.

2.02 WELDED JOINT PROTECTION FITTING FOR SMALL DIAMETER STEEL PIPE

A. Cylindrical Corrosion Barrier: Provide approved cylindrical corrosion barrier.

B. O-rings: Conform to National Sanitary Foundation requirements.

2.03 RESTRAINED JOINTS

A. Ductile-Iron Pipe: See Section 02501 - Ductile Iron Pipe and Fittings.

B. PVC Pipe: See Section 02506 - Polyvinyl Chloride Pipe. Perform hydrostatic testing in accordance with ASTM F 1674.

C. Prestressed Concrete Cylinder Pipe, Bar-Wrapped Pipe and Steel Pipe: Welded joints (see Paragraph 3.06 D).

D. Restrained Joints where required on DIP and PVC pipe is allowed with the following requirement as an alternative to the pipe with an integral restrained joint systems:

1. Restraint devices: Manufacture of high strength ductile iron, ASTM A 536 up to 24 inches, and ASTM A 36 for sizes greater than 30 inches. Working pressure rating twice that of design test pressure.

2. Bolts and connecting hardware: High strength low alloy material in accordance with ANSI A21.11/AWWA C111.

E. Ductile Iron Pipe in auger holes must be provided with integral restrained joints at both the bell and the spigot.

2.04 COUPLINGS AND APPURTENANCES FOR LARGE DIAMETER WATERLINE

A. Flexible (Dresser-type) Couplings.

1. Install where shown on Drawings or where allowed by Project Manager for Contractor's convenience. Use galvanized flexible couplings when installed on galvanized pipe which is cement lined, or when underground. Provide gaskets manufactured from Neoprene or Buna-N.

2. For steel pipe; provide approved sleeve-type flexible couplings. Thickness of middle ring equal to or greater than thickness of pipe wall.

3. Provide approved flanged adapter couplings for steel pipe

4. Use Type 316 stainless steel bolts, nuts and washers where flexible couplings are installed underground. Coat entire coupling with 20-mil of approved coal tar coating.

B. Flap Valves: Provide approved flap valves on discharge of manhole drainline as shown on Drawings.

1. Body and Flap: ASTM A 126-B cast iron.

2. Seats: ASTM B 21-CA482 or ASTM B 301-CA145 bronze.

3. Resilient Seat:

4. Hinge Arms: ASTM B 584-CA865 high tensile bronze.

5. Hinge pins: ASTM B 98-CA655 silicon bronze.

PART 3 EXECUTION

3.01 PREPARATION

A. Conform to applicable installation specifications for types of pipe used.

B. Employ workmen who are skilled and experienced in laying pipe of type and joint configuration being furnished. Provide watertight pipe and pipe joints.

C. Lay pipe to lines and grades shown on Drawings.

D. Confirm that nine feet minimum separation from gravity sanitary sewers and manholes or separation of four feet minimum from force mains as specified in this Section in all directions unless special design is provided on Drawings.

E. Where above clearances cannot be attained, and special design has not been provided on Drawings, obtain direction from Project Manager before proceeding with construction.

F. Inform Project Manager if unmetered sprinkler or fire line connections exist which are not shown on Drawings. Make transfer only after approval by Project Manager.

G. For projects involving multiple subdivisions or locations, limit water line installation to maximum of two project site locations. Maximizing 2 pipe installation crews shall be permitted, unless otherwise approved by Project Manager.

H. City of Houston Utility Operations Division will handle, at no cost to Contractor, operations involving opening and closing valves for wet connections and for chlorination. Contractor is responsible for handling necessary installations and removal of chlorination and testing taps and risers.

I. If asbestos-cement (A.C.) pipe is encountered, follow safety practices outlined in American Water Works Association's publication, "Work Practices for A/C Pipe". Strictly adhere to "recommended practices" contained in this publication and make them "mandatory practices" for this Project.

J. For pipe diameters 36 inches and greater, clearly mark each section of pipe and fitting with unique designation on inside of pipe along with pressure class. Locate unique identifying mark minimum of five feet away from either end of each section of pipe. Provide one unique identifying mark in middle of each fitting. Place markings at consistent locations. Use permanent black paint and minimum letter height of 4 inches to mark designations.

K. Contractor is responsible for assuring chosen manufacturer fulfills requirements for extra fittings and, therefore, is responsible for costs due to downtime if requirements are not met.

L. Do not remove plugs or clamps during months of peak water demands; June, July and August, unless otherwise approved by Project Manager.

3.02 HANDLING, CLEANING AND INSPECTION

A. Handling:

1. Place pipe along project site where storm water or other water will not enter or pass through pipe.

2. Load, transport, unload, and otherwise handle pipe and fittings to prevent damage of any kind. Handle and transport pipe with equipment designed, constructed and arranged to prevent damage to pipe, lining and coating. Do not permit bare chains, hooks, metal bars, or narrow skids or cradles to come in contact with coatings. Where required, provide pipe fittings with sufficient interior strutting or cross bracing to prevent deflection under their own weight.

3. Hoist pipe from trench side into trench by means of sling of smooth steel cable, canvas, leather, nylon or similar material.

4. For large diameter water lines, handle pipe only by means of sling of canvas, leather, nylon, or similar material. Sling shall be minimum 36 inches in width. Do not tear or wrinkle tape layers.

5. Use precautions to prevent injury to pipe, protective linings and coatings.

   a. Package stacked pipe on timbers. Place protective pads under banding straps at time of packaging.

   b. Pad fork trucks with carpet or other suitable material. Use nylon straps around pipe for lift when relocating pipe with crane or backhoe.

   c. Do not lift pipe using hooks at each end of pipe.

   d. Do not place debris, tools, clothing, or other materials on pipe.

6. Repair damage to pipe or protective lining and coating before final acceptance.

7. For cement mortar line and coated steel pipe, permit no visible cracks longer than 6 inches, measured within 15 degrees of line parallel to pipe longitudinal axis of finished pipe, except:

   a. In surface laitance of centrifugally cast concrete.

   b. In sections of pipe with steel reinforcing collars or wrappers.

   c. Within 12 inches of pipe ends.

8. Reject pipe with visible cracks (not meeting exceptions) and remove from project site.

B. Cleaning: Thoroughly clean and dry interior of pipe and fittings of foreign matter before installation, and keep interior clean until Work has been accepted. Keep joint contact surfaces clean until jointing is completed. Do not place debris, tools, clothing or other materials in pipe. After pipe laying and joining operations are completed, clean inside of pipe and remove debris.

C. Inspection: Before installation, inspect each pipe and fitting for defects. Reject defective, damaged or unsound pipe and fittings and remove them from site.

3.03 EARTHWORK

A. Conform to applicable provisions of Section 02317 - Excavation and Backfilling for Utilities and Section 02447 - Augering Pipe and Conduit.

B. Bedding: Use bedding materials in conformance with Section 02320 - Utility Backfill Materials.

C. Backfill: Use bank run sand or earth or native soil as specified in Section 02320 - Utility Backfill Materials. Backfill excavated areas in same day excavated. When not possible, cover excavated areas using steel plates on paved areas and other protective measures elsewhere.

D. Place material in uniform layers of prescribed maximum loose thickness and wet or dry material to approximately optimum moisture content. Compact to prescribed density Water tamping is not allowed.

E. Pipe Embedment: Including 6-inch pipe bedding and backfill to 12 inches above top of pipe.

3.04 PIPE CUTTING

A. Cut pipe 12 inches and smaller with standard wheel pipe cutters. Cut pipe larger than 12 inches in manner approved by Project Manager. Make cuts smooth and at right angles to axis of pipe. Bevel plain end with heavy file or grinder to remove sharp edges.

3.05 PIPING INSTALLATION

A. General Requirements:

1. Lay pipe in subgrade free of water.

2. Make adjustments of pipe to line and grade by scraping away subgrade or filling in with granular material.

3. Properly form bedding to fully support bell without wedging or blocking up bell.

4. Open Cut Construction: Keep pipe trenches free of water which might impair pipe laying operations. Grade trench to provide uniform support along bottom of pipe. Excavate for bell holes after bottom has been graded and in advance of placing pipe. Lay not more than nominal city block length of not more than 300 feet of pipe in trench ahead of backfilling operations. Cover or backfill laid pipe if pipe laying operations are interrupted and during non-working hours. Place backfill carefully and simultaneously on each side of pipe to avoid lateral displacement of pipe and damage to joints. If adjustment of pipe is required after it has been laid, remove and re-lay as new pipe.

B. Install pipe continuously and uninterrupted along each street on which work is to be performed. Obtain approval of Project Manager prior to skipping any portion of Work.

C. Protection of Pipeline: Securely place stoppers or bulkheads in openings and in end of line when construction is stopped temporarily and at end of each day's work.

D. Perform Critical Location as shown on Drawings. Refer to Section 02317 - Excavation and Backfill for Utilities for additional requirements at critical locations.

E. Laying Large Diameter Water Line

1. Lay not more than 50 feet of pipe in trench ahead of backfilling operations.

2. Dig trench proper width as shown. When trench width below top of pipe becomes 4 feet wider than specified, install higher class of pipe or improved bedding, as determined by Project Manager. No additional payment will be made for higher class of pipe or improved bedding.

3. Use adequate surveying methods and equipment; employ personnel competent in use of this equipment. Horizontal and vertical deviations from alignment as indicated on Drawings shall not exceed 0.10 feet. Measure and record "as-built" horizontal alignment and vertical grade at maximum of every 100 feet on record drawings.

4. Prevent damage to coating when placing backfill. Use backfill material free of large rocks or stones, or other material which could damage coatings.

5. Before assembling couplings, lightly coat pipe ends and outside of gaskets with cup grease or liquid vegetable soap to facilitate installation.

6. Prior to proceeding with critical tie-ins submit sequence of work based on findings from "critical location" effort.

F. Perform following additional procedures when working on plant sites.

1. Seventy-two hours prior to each plant shut down or connection, schedule coordination meeting with Project Manager and Water Production personnel. At this meeting, present proposed sequencing of Work and verification of readiness to complete Work as required and within time permitted. Do not proceed with Work until Project Manager agrees key personnel, equipment and materials are on hand to complete Work.

2. Prior to fully excavating around existing piping, excavate as minimal as possible to confirm type and condition of existing joints. Verify size, type, and condition of pipe prior to ordering materials or fully mobilizing for Work.

3. Do not proceed with connections to existing piping and identified critical stages of work unless approved by Project Manager and City's Utility Maintenance Division operator is present to observe.

4. Coordinate with Public Utilities Division (PUD) operators to obtain reduction in operating pressures prior to performing connections to existing piping.

5. Make connections to existing piping only when two valves are closed off between connection and source of water pressure. Do not make connection relying solely on one valve, unless otherwise approved by Project Manager.

6. Perform critical stages of Work identified on Drawings at night or during low water demand months as specified in Section 01110 - Summary of Work.

7. Excavation equipment used on plant sites to have smooth bucket; no teeth or side cutters.

8. Submit to Project Manager Lone Star Notification transmittal number prior to beginning excavation.

9. Before each "dig" with mechanical excavator, probe ground to determine potential obstructions. Repeat procedure until existing pipe is located or excavation reaches desired elevation. Perform excavations within one foot to existing piping by hand methods.

10. Provide adequate notice to pipe manufacture's representative when connecting or modifying existing prestressed or pretension concrete cylinder pipe.

11. Provide field surveyed (horizontal and vertical elevations) "as-builts" of new construction and existing underground utilities encountered. Submit in accordance with Section 01330 - Submittal Procedures.

12. Prior to performing plant work to be done on weekend, provide list of sites and contact person with phone numbers to Project Manager by noon on Thursday of week. Contact person must be accessible during weekend, have Houston Metro Area phone number, and be authorized to make emergency decisions.

13. No night work or plant shut down will be scheduled to begin two working days before or after designated City Holidays.

G. For tie-ins to existing water lines, provide necessary material on hand to facilitate connection prior to shutting down existing water line. Provide City a minimum of two weeks notice prior to shutting down existing water line.

3.06 JOINTS AND JOINTING

A. Rubber Gasketed Bell-and-Spigot Joints for Concrete Cylinder Pipe, Bar Wrapped Pipe PVC, Steel, and DIP:

1. After rubber gasket is placed in spigot groove of pipe, equalize rubber gasket cross section by inserting tool or bar recommended by manufacturer under rubber gasket and moving it around periphery of pipe spigot.

2. Lubricate gaskets with nontoxic water-soluble lubricant before pipe units are joined.

3. Fit pipe units together in manner to avoid twisting or otherwise displacing or damaging rubber gasket.

4. After pipe sections are joined, check gaskets to ensure that no displacement of gasket has occurred. If displacement has occurred, remove pipe section and remake joint as for new pipe. Remove old gasket, inspect for damage and replace if necessary before remaking joint.

5. Where preventing movement of 16-inch diameter or greater pipe is necessary due to thrust, use restrained joints as shown on Drawings.

   a. Include buoyancy conditions for soil unit weight when computing thrust restraint calculations.

   b. Do not include passive resistance of soil in thrust restraint calculations.

6. Except for PVC pipe, provide means to prevent full engagement of spigot into bell as shown on Drawings. Means may consist of wedges or other types of stops as approved by Project Manager.

7. Use feeler gauge to verify water-tightness of each pipe joint prior to application of joint grout. Perform feeler gauge test from interior of pipe, immediately after installation and after backfilling and compaction. Perform feeler gauge test in accordance with manufacturer's recommendations to determine if the joint is within tolerance. Provide

results to Project Manager. Notify Project Manager immediately when a joint is found to be out of tolerance or fails feeler gauge test, and submit repair plan for approval by Project Manager.

B. Flanged Joints where required on Concrete Cylinder Pipe, Bar Wrapped Pipe, Ductile Iron Pipe, or Steel Pipe:

1. AWWA C 207. Prior to installation of bolts, accurately center and align flanged joints to prevent mechanical prestressing of flanges, pipe and equipment. Align bolt holes to straddle vertical, horizontal or north-south center line. Do not exceed 3/64 inch per foot inclination of flange face from true alignment.

2. Use full-face gaskets for flanged joints. Provide 1/8-inch-thick cloth inserted rubber gasket material. Cut gaskets at factory to proper dimensions.

3. Use galvanized or black nuts and bolts to match flange material. Use cadmium-plated steel nuts and bolts underground. Tighten bolts progressively to prevent unbalanced stress. Maintain at all times approximately same distance between two flanges at points around flanges. Tighten bolts alternately (180° apart) until all are evenly tight. Draw bolts tight to ensure proper seating of gaskets. Provide Densco petroleum based tape or approved equal for all exposed portions of nuts, bolts and pipe.

4. Full length bolt isolating sleeves and washers shall be used with flanged connections. Furnish kits in accordance with City's "Approved Products List."

5. For in-line flange joints 30 inches in diameter and greater and at butterfly valve flanges, provide Pyrox G-10 with nitrite seal, conforming to ANSI A 21.11 mechanical joint gaskets. For in-line flange joints sized between 12 inches in diameter and greater and 24 inches in diameter and smaller, provide Phenolic PSI with nitrite seal gasket conforming to ANSI A 21.11 mechanical joint gaskets.

C. Welded Joints (Concrete Cylinder Pipe, Bar Wrapped Pipe, Steel Pipe):

1. Prior to starting work, provide certification of qualification for welders employed on project for type of work procedures and positions involved.

2. Joints: AWWA C 206. Full-fillet, single lap-welded slip-type either inside or outside, or double butt-welded type; use automatic or hand welders; completely penetrate deposited metal with base metal; use filler metal compatible with base metal; keep inside of fittings and joints free from globules of weld metal which would restrict flow or become loose. Do not use mitered joints. For interior welded joints, complete backfilling before welding. For exterior field-welded joints, provide adequate working room under and beside pipe. Use exterior welds for 30-inch and smaller.

3. Furnish welded joints with trimmed spigots and interior welds for 36-inch and larger pipe.

4. Bell-and-spigot, lap-welded slip joints: Deflection may be taken at joint by pulling joint up to 3/4 inch as long as 1 ½ inch minimum lap is maintained. Spigot end may be miter cut to take deflections up to 5 degrees as long as joint tolerances are maintained. Miter end cuts of both ends of butt-welded joints may be used for joint deflections of up to 5 degrees.

5. Align piping and equipment so that no part is offset more than 1/8 inch. Set fittings and joints square and true, and preserve alignment during welding operation. For butt welded joints, align abutting ends to minimize offset between surfaces. For pipe of same nominal wall thickness, do not exceed 1/16 inch offset. Use line-up clamps for this purpose; however, take care to avoid damage to linings and coatings.

6. Protect coal-tar-epoxy lining during welding by draping an 18-inch-wide strip of heat resistant material over top half of pipe on each side of lining holdback to avoid damage to lining by hot splatter. Protect tape coating similarly if external welding is required.

7. Welding rods: Compatible with metal to be welded to obtain strongest bond, E-70XX.

8. Deposit metal in successive layers to provide at least 2 passes or beads for automatic welding and 3 passes or beads for manual welding in completed weld.

9. Deposit no more than 1/4 inch of metal on each pass. Thoroughly clean each individual pass with wire brush or hammer to remove dirt, slag or flux.

10. Do not weld under weather condition that would impair strength of weld, such as wet surface, rain or snow, dust or high winds, unless work is properly protected.

11. Make tack weld of same material and by same procedure as completed weld. Otherwise, remove tack welds during welding operation.

12. Remove dirt, scale, and other foreign matter from inside piping before tying in sections, fittings, or valves.

13. Welded Joints for Large Diameter Water Lines:

    a. Furnish pipe with trimmed spigots and interior welds for 36-inch and larger pipe.

    b. Use exterior welds for 30 inch and smaller.

    c. Only one end may be miter cut. Miter end cuts of both ends of butt-welded joints may be used for joint deflections of up to 2 ½ degrees.

    d. For large diameter water lines, employ an independent certified testing laboratory, approved by Project Manager, to perform weld acceptance tests on welded joints. Include cost of such testing and associated work to accommodate

testing in contract unit price bid for water line. Furnish copies of test reports to Project Manager for review. Project Manager has final decision as to suitability of welds tested.

1) Weld acceptance criteria:

a) Conduct in accordance with ASTM E165- Standard Test Method for Liquid Penetrant Examination and ASTM E709 Standard Guide for Magnetic Particle Examination. Use X-ray methods for butt welds, for 100 percent of joint welds.

b) Examine welded surfaces for the following defects:

i) Cracking.

ii) Lack of fusion/penetration.

iii) Slag which exceeds one-third (t) where (t) equals material thickness.

iv) Porosity/Relevant rounded indications greater than 3/16 inch; rounded indication is one of circular or elliptical shape with length equal to or less than three times its width.

v) Relevant linear indications in which length of linear indication exceeds three times its width.

vi) Four or more relevant 1/16-inch rounded indications in line separated by 1/16 inch or less edge to edge.

14. After pipe is joined and prior to start of welding procedure, make spigot and bell essentially concentric by jacking, shimming or tacking to obtain clearance tolerance around periphery of joint except for deflected joints.

15. Furnish each welder employed steel stencil for marking welds, so work of each welder can be identified. Mark pipe with assigned stencil adjacent to weld. When welder leaves job, stencil must be voided and not duplicated. Welder making defective welds must discontinue work and leave project site. Welder may return to project site only after recertification.

16. Provide cylindrical corrosion barriers for epoxy lined steel pipe 24-inch diameter and smaller, unless minimum wall thickness is 0.5 inches or greater.

a. In addition to welding requirements contained here in Paragraph 3.06, conform to protection fitting manufacturer's installation recommendations.

b. Provide services of technical representative of manufacturer available on site at beginning of pipe laying operations. Representative to train welders and advise regarding installation and general construction methods. Welders must have 12 months prior experience installing protection fittings.

c. All steel pipe is to have cutback 3/4 inch to no greater than 1 inch of internal diameter coating from weld bevel.

d. Furnish steel fittings with cylindrical corrosion barriers with shop welded extensions to end of fittings. Extension length to measure no less than diameter of pipe. Shop apply lining in accordance with AWWA C 210 or AWWA C 213.

e. All steel pipe receiving field adjustments are to be cold cut using standard practices and equipment. No cutting using torch is to be allowed.

D. Harnessed Joints (Concrete Cylinder Pipe, Bar Wrapped Pipe):

1. Use of snap-ring type restrained joints on pipe is limited to 20-inch through 48-inch diameters.

2. Position snap-ring joint bolt on top (12 o'clock portion). Provide minimum 1/2-inch joint recess. Use joint "diapers" minimum of 12 inches wide.

3. For field adjustments with deflections beyond manufacturer's recommendations:

a. Field trim spigot.

b. Do not engage ring.

4. Harnessed joints are not permitted in areas defined on Drawings as potentially petroleum contaminated material, in tunnels, or at bend greater than 5 degrees.

5. Install harness type joints including snap rings at straight sections of pipe.

E. Restrained Joints

1. For existing water lines and water lines less than 16 inches in diameter, restrain pipe joints with concrete thrust blocks.

2. Thrust restraint lengths shown on Drawings are minimum anticipated lengths. These lengths are based on deflections indicated and on use of prestressed concrete cylinder pipe for large diameter lines and ductile iron pipe for small diameter lines. Adjustments in deflections or use of other pipe material may result in reduction or increase of thrust lengths. Perform calculations by pipe manufacturer to verify proposed thrust restraint lengths. Submit calculations for all pipe materials sealed by a registered Professional Engineer in State of Texas for review by Project Manager. Make adjustments in thrust restraint lengths at no additional cost to City.

3. Passive resistance of soil will not be permitted in calculation of thrust restraint.

4. For 16-inch lines and larger use minimum 16-foot length of pipe in and out of joints made up of beveled pipe where restraint joint lengths are not identified on Drawings. Otherwise, provide restraint joints for a minimum length of 16 feet on each side of beveled joints.

5. Installation.

   a. Install restrained joints mechanism in accordance with manufacturer's recommendations.

   b. Examine and clean mechanism; remove dirt, debris and other foreign material.

   c. Apply gasket and joint NSF 61 FDA food grade approved lubricant.

   d. Verify gasket is evenly seated.

   e. Do not over stab pipe into mechanism.

6. Prevent any lateral movement of thrust restraints throughout pressure testing and operation.

7. Place 2500 psi concrete conforming to Section 03315 - Concrete for Utility Construction, for blocking at each change in direction of existing water lines, to brace pipe against undisturbed trench walls. Finish placement of concrete blocking, made from Type I cement, 4 days prior to hydrostatic testing of pipeline. Test may be made 2 days after completion of blocking if Type II cement is used.

F. Joint Grout (Concrete Cylinder Pipe, Bar Wrapped Pipe, Steel Pipe):

1. Mix cement grout mixture by machine except when less than 1/2 cubic yard is required. When less than 1/2 cubic yard is required, grout may be hand mixed. Mix grout only in quantities for immediate use. Place grout within 20 minutes after mixing. Discard grout that has set. Retempering of grout by any means is not permitted.

2. Prepare grout in small batches to prevent stiffening before it is used. Do not use grout which has become so stiff that proper placement cannot be assured without retempering. Use grout for filling grooves of such consistency that it will adhere to ends of pipe.

3. Surface Preparation: Remove defective concrete, laitance, dirt, oil, grease and other foreign material from concrete surfaces with wire brush or hammer to sound, clean surface. Remove rust and foreign materials from metal surfaces in contact with grout.

4. Follow established procedures for hot and cold weather concrete placement.

5. Complete joint grout operations and backfilling of pipe trenches as closely as practical to pipe laying operations. Allow grouted exterior joints to cure at least 1 hour before compacting backfill.

6. Grouting exterior joint space: Hold wrapper in place on both sides of joint with minimum 5/8-inch-wide steel straps or bands. Place no additional bedding or backfill material on either side of pipe until after grout band is filled and grout has mechanically stiffened. Pull ends of wrapper together at top of pipe to form access hole. Pour grout down one side of pipe until it rises on other side. Rod or puddle grout to ensure complete filling of joint recess. Agitate for 15 minutes to allow excess water to seep through joint band. When necessary, add more grout to fill joint completely. Protect gap at top of joint band from backfill by allowing grout to stiffen or by covering with structurally protective material. Do not remove band from joint. Proceed with placement of additional bedding and backfill material.

7. Interior Joints for Pipe 24 inches and Smaller: Circumferentially butter bell with grout prior to insertion of spigot, strike off flush surplus grout inside pipe by pulling filled burlap bag or inflated ball through pipe with rope. After joint is engaged, finish off joint grout smooth and clean. Use swab approved by Project Manager for 20-inch pipe and smaller.

8. Protect exposed interior surfaces of steel joint bands by metallizing, by other approved coatings, or by pointing with grout. Joint pointing may be omitted on potable water pipelines if joint bands are protected by zinc metallizing or other approved protective coatings.

9. Remove and replace improperly cured or otherwise defective grout.

10. Strike off grout on interior joints and make smooth with inside diameter of pipe.

11. When installed in tunnel or encasement pipe and clearance within casing does not permit outside grout to be placed in normal manner, apply approved flexible sealer, such as Flex Protex or equal, to outside joint prior to joint engagement. Clean and prime surfaces receiving sealer in accordance with manufacturer's recommendations. Apply sufficient quantities of sealer to assure complete protection of steel in joint area. Fill interior of joint with grout in normal manner after joint closure.

12. Interior Joints for Water Lines 30 inches and Larger: Clean joint space, wet joint surfaces, fill with stiff grout and trowel smooth and flush with inside surfaces of pipe using steel trowel so that surface is smooth. Accomplish grouting at end of each work day. Obtain written acceptance from Project Manager of inside joints before proceeding with next day's pipe laying operation. During inspection, insure no delamination of joint mortar has occurred by striking joint mortar lining with rubber mallet. Remove and replace delaminated mortar lining.

13. Work which requires heavy equipment to be over water line must be completed before mortar is applied to interior joints.

14. Do not apply grout to joints that are out of tolerance until acceptable repairs are made.

G. Large Diameter Water Main Joint Testing: In addition to testing individual joints with feeler gauge approximately 1/2 inch wide and 0.015-inch thick, use other joint testing procedure approved or recommended by pipe manufacturer which will help ensure watertight installation prior to backfilling. Perform tests at no additional cost to City.

H. Make curves and bends by deflecting joints or other method as recommended by manufacturer and approved by Project Manager. Submit details of other methods of providing curves and bends which exceed manufacturer's recommended deflection prior to installation.

1. Deflection of pipe joints shall not exceed maximum deflection recommended by pipe manufacturer, unless otherwise indicated on Drawings.

2. If deflection exceeds that specified but is less than 5 percent, repair entire deflected pipe section such that maximum deflection allowed is not exceeded.

3. If deflection is equal to or exceeds 5 percent from that specified, remove entire portion of deflected pipe section and install new pipe.

4. Replace, repair, or reapply coatings and linings as required.

5. Assessment of deflection may be measured by Project Manager at location along pipe. Arithmetical averages of deflection or similar average measurement methods will not be deemed as meeting intent of standard.

6. When rubber gasketed pipe is laid on curve, join pipe in straight alignment and then deflect to curved alignment.

I. Closures Sections and Approved Field Modifications to Steel, Concrete Cylinder Pipe, Bar Wrapped Pipe and Fittings:

1. Apply welded-wire fabric reinforcement to interior and exterior of exposed interior and exterior surfaces greater than 6 inches in diameter. Welded-wire fabric: minimum W1; maximum spacing 2 inches by 4 inches; 3/8 inch from surface of steel plate or middle third of lining or coating thickness for mortar thickness less than 3/4 inch.

2. Fill exposed interior and exterior surfaces with nonshrink grout.

3. For pipe diameters 36 inches and greater, perform field welds on interior and exterior of pipe.

4. For large diameter water lines, provide minimum overlap of 4 inches of butt strap over adjacent piece on butt-strap closures.

3.07 CATHODIC PROTECTION APPURTENANCES

A. Where identified on Drawings, modify pipe for cathodic protection as detailed on Drawings and specified. Unless otherwise noted, provide insulation kits including test stations at connections to existing water system or at locations to isolate one type of cathodic system from another type, between water line, access manhole piping and other major openings in water line, or as shown on Drawings.

B. Bond joints for pipe installed in tunnel or open cut, except where insulating flanges are provided. Weld strap or clip between bell and spigot of each joint or as shown on Drawings. No additional bonding required where joints are welded for thrust restraint. Repair coatings as specified by appropriate AWWA standard, as recommended by manufacturer, and as approved by Project Manager.

C. Bonding Strap or Clip: Free of foreign material that may increase contact resistance between wire and strap or clip.

3.08 SECURING, SUPPORTING AND ANCHORING

A. Support piping as shown on Drawings and as specified in this Section, to maintain line and grade and prevent transfer of stress to adjacent structures.

B. Where shown on Drawings, anchor pipe fittings and bends installed on water line by welding consecutive joints of pipe together to distance each side of fitting. Restrained length, as shown on Drawings, assumes that installation of pipe and subsequent hydrostatic testing begins upstream and proceed downstream, with respect to normal flow of water in pipe. If installation and testing differs from this assumption, submit for approval revised method of restraining pipe joints upstream and downstream of device used to test against (block valve, blind flange or dished head plug).

C. Use adequate temporary blocking of fittings when making connections to distribution system and during hydrostatic tests. Use sufficient anchorage and blocking to resist stresses and forces encountered while tapping existing water line.

3.09 POLYETHYLENE WRAP FOR DUCTILE IRON PIPE

A. Double wrap pipe and appurtenances (except fire hydrants and fusion bond or polyurethane coated fittings) with 8-mil polyethylene film.

B. Conform to requirements of Section 02528 - Polyethylene Wrap.

3.10 CLEANUP AND RESTORATION

A. Provide cleanup and restoration crews to work closely behind pipe laying crews, and where necessary, during disinfection and hydrostatic testing, service transfers, abandonment of old water lines, backfill and surface restoration.

B. Unless otherwise approved by Project Manager, comply with the following;

1. Once water line is installed to limits approved in layout submitted, immediately begin preparatory work for disinfection effort.

2. No later than three days after completing disinfection preparatory work, submit to City appropriate request for disinfection.

3. If City fails to perform initial disinfection of lines in accordance with Section 2514 - Disinfection of Water Lines, within seven days from submission of appropriate request, and if approved by Project Manager, pipe laying operations may continue beyond approved limits until the City responds.

4. Immediately after transfer of services, begin abandonment of old water lines and site restoration.

5. Do not exceed a total of 50% of total project linear feet of disturbed right-of-way and easement until site is restored in accordance with Section 01740 - Site Restoration.

6. Exceeding any of the above footage limitations shall be considered a material breach of the Contract and subject to termination in accordance with the General Conditions.

C. For large diameter water lines, do not install more than 2,000 linear feet of water line, without previous 2,000 linear feet being restored in accordance with Section 01740 - Site Restoration. Schedule paving crews so repaving work will not lag behind pipe laying work by more than 1,000 linear feet. Failure to comply with this requirement shall be considered a material breach of the Contract and subject to termination in accordance with the General Conditions.

3.11 CLEANING PIPING SYSTEMS

A. Remove construction debris or foreign material and thoroughly broom clean and flush piping systems. Provide temporary connections, equipment and labor for cleaning. City must inspect water line for cleanliness prior to filling.

3.12 DISINFECTION OF WATER LINES

A. Conform to requirements of Section 02514 - Disinfection of Water Lines.

3.13 FIELD HYDROSTATIC TESTS

A. Conform to requirements of Section 02515 - Hydrostatic Testing of Pipelines.

END OF SECTION

THIS PAGE IS INTENTIONALLY LEFT BLANK.

Section 02529

WATER WELLS

PART 1 GENERAL

1.01 SECTION INCLUDES

A. Contractor shall drill, collect drill cutting samples, and log pilot hole.

B. Contractor shall analyze all data from pilot hole and present written report to City with recommendations for completion of water well.

C. City shall review Contractor's recommendations, including the final depths and material settings for the well.

D. Either City or Contractor may elect to abandon pilot hole without proceeding further.

E. If pilot hole is not abandoned, Contractor shall complete construction, development and testing of well according to Contract Documents, including meeting all guarantees.

F. Disinfect well.

1.02 UNIT PRICES

A. The actual payment for the well will be based on the Contractor's Schedule of Values for the well, as determined by Items 1 through 13 of the Base Bid Section of Document 00410 - Bid Form, adjusted as necessary by the prices in Items 14 through 26 of the Extra Unit Price Section.

B. No progress payments will be made for any part of a water well, except mobilization, a successfully completed pilot hole meeting the specifications and any water samples collected, until all the work on the well is completed and initial performance guarantees are shown to have been met. This provision applies to the well only and not to the permanent pump, motor, electrical work, discharge piping, and other above-ground installations. If a decision is made to abandon the pilot hole, payments will be made for mobilization, water samples collected and abandonment in accordance with the specifications as provided by subsection 3.01 E of Section 02529.

1.03 RELATED WORK

A. Drawings: The work to be done under these specifications is described in part by the plans.

1.04 QUALITY ASSURANCE

A. Character of Workmen: The Contractor shall employ only competent workmen, skilled in the performance of the type of work required under the contract, to do the work. Through the entire course of the work on the well, a driller or foreman in charge and on the job in the field at the well for at least one tour per day shall have had experience in charge of similar work on at least five previous water wells of equal or greater size constructed in the Texas Gulf Coast area. Further, during all work on underreaming, setting the liner, graveling the well, and developing the well, a driller or foreman of at least that much experience shall be on this job in the field continuously at the well; and for all parts of such work which are conducted on a basis of more than 16 hours per calendar day, at least two such experienced drillers or foremen shall be assigned to the work so one can remain active on the job while the other rests.

B. Drilling Equipment: The water well shall be drilled with conventional rotary water well drilling equipment. All equipment used in the construction of the well shall be in good condition and at least of such size and capacity as is normally used by water well contractors for construction of wells of the size and diameters described in these contract documents. The mud pump furnished with the drilling rig shall be capable of circulating the drilling fluid with sufficient velocity to remove the drill cuttings from the hole within a reasonable time interval. The pump shall be capable of providing an average uphole fluid velocity of at least 1 25 feet per minute in the pilot hole. The City shall have the right to approve or reject the types of drilling rig and equipment used, but approval by the City will not remove the Contractor's responsibility to furnish equipment that will efficiently complete the work as specified.

C. Mud Control and Testing: A record of the types and amounts of drilling mud or mud additives added during each 8-hour tour and the times at which it is added shall be recorded on each tour progress report. The drilling mud or mud additives shall be manufactured by Baroid, Dresser Magcobar, or other drilling mud companies approved by the City. The Contractor shall maintain laboratory equipment for the control of drilling mud during all drilling operations. Mud weight, viscosity, water loss, pH, sand content and mud cake thickness shall be measured and recorded at least twice during each 8-hour tour. These tests shall be run in accordance with the American Petroleum Institute Standard Procedure (API, RP1 3B, Tenth Edition, June 1, 1984) for field testing drilling fluids using the following procedures given therein: mud weight - Section 1.3, page 4; viscosity - Section 2.3, page 6; water loss and mud cake thickness - Section 3.3, page 10; and sand content - Section 5.3, page 16. Measurement of pH using color matching paper and sticks shall be acceptable for simple water muds. The Contractor shall control the mud characteristics so that good drill cutting samples can be obtained and a minimum of time and effort will be required for removal of the mud cake during development of the well. During normal operations, the Contractor shall follow the guidelines for

maintaining the drilling fluid as outlined in Section 4.7.3 of AWWA A100 unless the Contractor gives notice to the City and obtains approval of exceptions taken to those guidelines. Under unusual conditions and in emergencies or extreme circumstances, the Contractor may deviate from such guidelines without advance notice to or approval from the City if the Contractor considers this necessary to protect the well and/or meet the performance guarantees.

D. Water for Drilling and Testing: Water for the drilling operations shall be obtained from City of Houston fire hydrants, if available, at points designated by the City Engineer. It shall be the Contractor's responsibility to provide and maintain pumping equipment and water supply connections for his use and to install and maintain all necessary supply connections and piping for same. The Contractor shall pay the City for the water used. If water is not available from a City fire hydrant or a connection at the water plant, the Contractor shall construct a water supply at the well site.

E. Disinfection of Well: Except as noted herein, disinfection procedures shall be in accordance with AWWA Standards for Disinfection of Wells - ANSI/AWWA C654.

1.05 SUBMITTALS

A. Drilling Equipment:

1. Before the City issues a work order, the Contractor shall provide the following information in writing to the City, and answer any other questions the City may have with respect to the equipment the Contractor proposes to use.

Make of Rig_____

Model and Year_____Condition _____

Type of Derrick or Mast_____Capacity (pounds)_____

Height of Derrick or Mast_____

Drawworks Capacity (feet)_____

Horsepower of Drawworks Engine_____

Size and Type of Mud Pump_____

Pumping Rate of Mud Pump_____

Horsepower of Engine Driver on Mud Pump_____

Description of Hydraulic Graveling Machine_____

Description of Underreamer_____

Present Location of Rig and Equipment_____

B. Workmen: The Contractor shall furnish to the City a written experience record for each driller or foreman at the time the driller or foreman commences work on this project. The Contractor shall provide a verbal report to the City that the required personnel are available and assigned to this project at least one d ay before they are required to be on the job.

C. Professional Analyst: The Contractor shall provide the City an education and experience record for the professional logging analyst who will analyze the geophysical logs.

D. Geophysical Logs: The Contractor shall provide the City a calibration verification limits summary for each logging tool which will be used when logging the pilot hole prior to the logging.

E. Welding Methods and Procedures: Submit qualification and certification materials as required by subsection 3.04 of Section 01110 - Summary of Work.

F. Gravel: The Contractor shall provide Toxicity Characteristic Leaching Procedure (TCLP) test results on the gravel filter material. Additionally, the Contractor should provide certification stating that gravel conforms to Section 4.3.4 of AWWA A100.

G. Drill Cutting Samples: The Contractor shall submit three copies of sieve analyses results on all drill cutting samples of water-bearing sands.

H. Surface Casing: The Contractor shall provide the City with clearly legible mill test certificates in English for casing used in each well.

I. Production Casing: The Contractor shall provide the City with clearly legible mill test certificates in English for blank pipe and screen used in each well. The type and description of screen components shall be submitted to the City before it is ordered by the Contractor.

J. Contractor's Evaluation: The Contractor shall provide the City an evaluation of each pilot hole and recommendations for completion of each well to comply with specified performance guarantees in accordance with paragraph 3.01 D of this specification section.

1.06 SCHEDULING WATER WELL WORK

A. The Contractor may keep full drilling crews at work on the drilling rig continuously at least two tours per day, at least five days per week, throughout the drilling, construction, development and testing of the well until the well is completed, except at such times when doing so is in conflict with one or more City or other public agency ordinances.

B. In any case, however, the following three operations at each well shall each be a continuous operation: (1) the final reaming of the hole for the surface casing, the alignment survey of the reamed hole, and the setting and cementing of the surface casing; (2) the scraping of the underreamed hole, the section gauge log of the underreamed hole, and the placement of the production casing and gravel in the well; and (3) the 36-hour continuous pumping test. The Contractor shall schedule the work on these continuous operations so there shall be no waiting time on equipment or materials during such operations. The Contractor shall obtain any necessary special permits from the City for these continuous operations in advance of commencing the operations. If any special equipment is required for the work in order to meet this requirement and obtain the necessary permits, the Contractor shall obtain and use such special equipment at his own expense.

C. No charge shall be made to the Contractor by the City for City's inspectors required for weekend or holiday inspection on this work.

1.07 COMPLETED WELL

A. The completed well shall be left by the Contractor in good condition, meeting all the requirements of these specifications as to the diameter, material settings, alignment, performance characteristics, and the like.

B. Upon completion of the well, the Contractor shall furnish in triplicate a complete written log of the well showing the formations encountered, the types and locations of all material settings, pumping test data, pump and motor data and manuals, electrical equipment and controls data, mechanical equipment data, water-level measuring equipment data, SCADA equipment data, and all other pertinent information required to complete properly detailed records of the well.

1.08 PRODUCT DELIVERY, STORAGE AND HANDLING

A. Sack Cement and Mud-Removing Chemicals:

1. Store in weathertight enclosures and protect against dampness and contamination.

2. Store off ground and in a building, if necessary.

B. Surface and Production Casing:

1. Store on pipe racks or on wooden or steel sills.

2. Move material in a safe manner to prevent damaging it.

C. Well Gravel:

1. Use handling methods that prevent contamination.

2. Store any bagged material in a manner to prevent breakage of container.

3. Stockpile any bulk material to protect it from contamination from soil.

4. Convey gravel in clean containers, i.e. trucks, scooploader buckets, bags, etc.

PART 2 P R O D U C T S

2.01 SURFACE CASING OF WELL

A. The surface casing shall be new API Spec 5L line pipe, Grade B or equal, with plain ends beveled for welding, ERW or seamless welded.

B. Surface casing for Forest Cove Well No. 5 shall be 20-inch O.D.; minimum wall thickness to be 0.50 inch.

2.02 CEMENT

A. The cement for cementing the surface casing in place shall be neat cement as specified in the most current AWWA Standard for Water Wells and to which a maximum of 6%, by dry weight, bentonite and 2%, by dry weight, calcium chloride may be added.

B. Class A neat cement slurry shall weigh 15.6 pounds per gallon, Class A cement slurry with 4 percent gel additive shall weigh 14.1 pounds per gallon, and Class A cement slurry with 6 percent gel additive shall weigh 13.5 pounds per gallon.

2.03 PRODUCTION CASING OF WELL

A. The blank pipe in the production casing for Forest Cove Well No. 5 shall be new API Spec 5L line pipe, Grade B or equal, with plain ends beveled for welding. Payment due the Contractor shall be adjusted on the basis of add and deduct prices provided in Document 00410 - Bid Form.

B. Blank pipe in the production casing for Forest Cove Well No. 5 shall be 14-inch O.D., minimum wall thickness of 0.500 inch

C. The upper portion of the blank liner shall be positioned inside the surface casing to form 80 feet of lap for the completed well.

D. The screen in the production casing shall be new Houston Weld, All Welded, or Weld Underbar Pipe Base screen as manufactured by Alloy Machine Works, Weatherford/Johnson Screens or approved equal. The pipe used in the screen, before perforation, shall be the same as the pipe in the production casing.

E. The steel pipe used in the Forest Cove screen shall be API Spec 5L line pipe, Grade B or equal, perforated to achieve at least 18 percent open area of the pipe under the screen. The bar spacers located on the outside of the perforated surface of the production casing shall be stainless steel, Type 316L, and shall be about 0.10-inch thickness. The wire wrapping over the bars shall be stainless steel, Type 316L.

F. The size of the screen openings to be used on the screen shall be selected by the Contractor based on the character and sieve analysis of the formation samples and the type and grading of the gravel selected.

G. The type, description and size of the screen components which the Contractor proposes to use shall be submitted to the City for approval before it is ordered by the Contractor.

2.04 BACK PRESSURE VALVE

A. The back pressure valve assembly installed at the bottom of the production casing shall be at least 12-3/4-inch diameter, of cast iron construction, cone type, and spring loaded, as manufactured by Houston Well Screen, Abco-Vacucast Metals, or approved equal.

2.05 GUIDE ON SURFACE CASING AND CENTRALIZERS ON PRODUCTION CASING

A. Each surface casing guide shall be made of 1/4-inch steel, about 2 inches wide, bowed to a depth of about 2 inches, and about 12 inches long, welded to the surface casing at both ends. The centralizers on the production casing below the surface casing shall be Weatherford or Antelope balloon spring type or equal.

2.06 GRAVEL

A. The type and size of the gravel to be used shall be determined and selected by the Contractor based on the character and sieve analyses of the water-bearing formations. The gravel selected by the Contractor shall be one of or a mixture of

water well gravels furnished and processed by Unimin Texas Company at Voca, Texas; Premier Silica (formerly Carmeuse) at Brady, Texas; or approved equal. It shall be washed, screened, and without sharp edges. It shall be free of dirt, trash, clay and other foreign substances. Crushed gravel shall not be used. The gravel shall be approved by the City before being ordered. The Supplier shall provide Toxicity Characteristic Leaching Procedure (TCLP) test results on the gravel filter material for the City's approval. When the Contractor submits his written report and recommendations to the City after completion of the pilot hole, the Contractor shall provide the City with a certificate from the gravel company that the gravel he proposes to use conforms to Section 4.3.4 of AWWA A100 unless the differences are described in the certificate.

2.07 MUD-REMOVING CHEMICALS

A. Mud-removing chemicals used during development may include tripolyphosphate, sodium acid pyrophosphate, Laynite W-7, Bentonite Mud Remover, Well Kleen - W, or others acceptable to the City.

PART 3 E X E C U T I O N

3.01 PILOT HOLE

A. General:

1. A pilot hole will be drilled at the well site to the depth determined by the City. The approximate depth for each site is given in the Bid Form and shown on the plans. The purposes of the pilot holes are to obtain geologic and hydrologic information concerning the water-bearing formations at the sites, and for construction of the water well at the site.

2. The pilot hole shall be drilled with a bit not larger than 9-7/8 inches and not smaller than 7-7/8 inches in diameter.

3. During the drilling of the pilot hole, a detailed driller's log shall be kept of all formations encountered, giving complete descriptions of all formations. The Contractor shall record the type, character and depth of materials encountered, thickness of strata, and any additional information that may be helpful in interpreting the drilling log. All measurements for depths shall be referenced to existing ground surface at the well site. Upon completion of drilling, three copies of the driller's formation log shall be furnished to the City.

4. A desander shall be provided to remove sand from the drilling fluid during the drilling of the pilot hole.

5. At least 20 feet of temporary 12-inch diameter casing shall be set in the top of the pilot hole. Cement shall be placed in the annular space between the pilot hole and the casing at the bottom of the casing so that all of the drilling mud and drill cuttings will circulate out of the pilot hole through the casing. The top of the casing shall extend above the natural ground level. A 2-inch sample flow line which extends from the casing to the drill cutting sample box shall be welded into the casing. If the contractor elects to also set a larger diameter casing outside the 12-inch diameter casing, the larger casing shall be set and cemented in place in a manner subject to approval by the City.

B. Logs and Samples:

1. Unless otherwise directed by the City, drill cutting samples shall be collected at intervals of no more than 10 feet from all sand sections encountered in the hole below the depth of 300 feet. Samples may be required at intervals of more or less than 10 feet as directed by the City. During drilling of the sands, the collection of samples shall be by use of the following method. The penetration of the bit shall stop when the top of the sampling interval is reached, and circulation of drilling fluid shall be continued for such time as is required for all cuttings to move from the last drilled section of the hole to the top of the ground. The zone selected for sampling shall then be drilled. Penetration of the b it shall again be stopped and circulation of drilling fluid shall be continued for such time as is required for all the cuttings to move from the last drilled section of the hole to the top of the ground. A cutting sample shall then be carefully collected from the cutting sample box or another container proposed by the Contractor and approved by the City. The cutting sample box and method of collecting the samples shall be approved by the City. The principle of the cutting sample box is to divert a representative portion of the flow of mud and drill cuttings through the box continuously during the drilling. If a cutting sample box is used, it shall be 24 inches wide, 18 inches deep, and 48 inches long. One end of the box shall be equipped with 1" x 4" or 1" x 6" wooden boards which serve as a removable gate. The top of the box shall be sufficiently lower in elevation than the point where the 2-inch flow line leaves the 12-inch casing so that mud and cuttings will flow freely through the 2-inch line. The 2-inch flow line shall be adjustable so its slope from the 12-inch casing to the sample box can be changed. The 2-inch flow line shall be equipped with an easily adjustable valve to adjust the flow rate.

2. At the beginning of the sampling process, the Contractor shall evaluate the results being obtained with respect to obtaining adequate samples of the sands. If the results appear less than satisfactory, the Contractor shall adjust his procedures to obtain adequate samples. Any adjustment shall be subject to approval by the City.

3. Three portions, about 1/2 to 1 pint each, of each sample taken shall be preserved in cloth sample bags and marked as to well owner, well name and number, depth and date. One set of samples shall be retained on the job for inspection. The Contractor shall deliver one set of the samples to the City. The third set of samples shall be retained by the Contractor for sieve analyses.

4. The Contractor may take any other drill cutting samples he desires, at any time and in any manner he wishes to take them, to assist him in his own evaluation and in selection of screen opening and gravel sizes and screen settings.

5. The Contractor shall have standard sieve analyses of the grain sizes run on all drill cutting samples of water-bearing sands obtained from the pilot hole. At least 100 grams of sample shall be sieved and at least the following sieves in inches shall be used: 0.0331, 0.0278, 0.0234, 0.0197, 0.0165, 0.0139, 0.0117, 0.0098, 0.0083, 0.0070, 0.0059, 0.0041 and 0.0029. Prior to the making of the analyses, the Contractor shall obtain approval by the City of the laboratory or screen company and method and sieve sizes selected for the analyses. Three copies of the results of the analyses shall be furnished to the City.

6. Readings with a Baker-Hughes INTEQ mechanical drift indicator shall be made in the pilot hole at intervals of approximately 30 feet of depth to the total depth of the hole. If any reading taken indicates a deflection of the hole from vertical of one degree or more, the Contractor shall correct the alignment so that the deflection from vertical is less than one degree or abandon and plug the pilot hole and drill at his own expense another pilot hole. The mechanical drift indicator disks shall be made available to the City during the course of the work. In case of disagreement between the Contractor and the City as to the mechanical drift indicator interpretations, the mechanical drift indicator disks shall be analyzed by INTEQ and two copies of INTEQ's interpretation of the survey shall be supplied to the City, all at the Contractor's expense. A full set of originals or exact copies of the disks, with their depths, shall be delivered to the City with the Contractor's report on the pilot hole provided for in these specifications.

7. When the pilot hole has been drilled to the required depth, a Baker-Hughes, Halliburton or Schlumberger Dual Induction Focused Log with Gamma Ray Log, spontaneous potential, and a Compensated Neutron Formation Density Log shall be made in the pilot hole. The City may elect to have a Spectralog made in the pilot hole if it determines this is desirable after reviewing the Gamma Ray Log. Payment due the Contractor for the Spectralog shall be based on the unit price provided in Document 00410 - Bid Form. When the required depth is reached, circulation shall continue until all drill cuttings have been removed from the hole and the drilling mud

in the hole is uniform and the logging service equipment is on location, after which the drill pipe may be removed from the hole. The logs shall be made immediately following removal of the drill pipe from the pilot hole. The scales of the logs shall be selected by the Contractor, subject to approval of the City. Ten field prints and ten finished copies of each log shall be delivered to the City. The field copies of the logs shall be approved by the City and the logging company analyst who is to analyze the logs before the logging service is released from the site by the Contractor. The logs shall also be provided to the City in an electronic version.

8. Any water samples that may be authorized shall be collected from the test hole by the conventional temporary water well method as described in paragraph 3.01 C of this Section.

C. Water Sampling:

1. At the option of the City, water samples will be taken in the pilot hole from sand zones selected after the pilot hole is drilled. The City shall be allowed a total of three (3) working days to decide if water samples shall be taken and to inform the Contractor. Disinfection of equipment, gravel and test hole to be in accordance with ANSI/AWWA C654.

2. Equipping Hole and Sampling Procedure:

a. After the geophysical logs are run, the City shall select the zones in the pilot hole from which it desires water samples. The hole below the lowest zone selected for water samples then shall be filled with a mixture of selected sand and gravel by use of a tremie pipe. The Contractor shall then ream the pilot hole to a minimum diameter of 12 inches to the bottom of the zone selected for water sampling and shall construct a temporary gravel-packed well with screen approved by the City and set opposite the deepest zone to be sampled.

b. Upon completion of reaming, the Contractor shall set 4-inch I.D. minimum diameter line pipe casing with up to 30 feet of 4-inch I.D. minimum diameter well screen, at appropriate intervals designated by the City to test the zone selected for development. The Contractor shall provide a tally of the length of each joint of casing and screen set for the water sampling operation. The casing and screen shall be of sufficient strength to be retrieved from the test well upon completion of water-sampling procedures in order to allow construction of the water supply production well. The steel casing from ground level to a depth of 450 feet shall be 6-5/8 inches in diameter. The screen slot size shall retain at least 90 percent of the gravel pack material used for this temporary test well. The bottom of the screen shall be fitted with a set nipple and back pressure valve

or a bull plug. The annulus between the casing and screen and the outer edge of the hole shall be filled with drilling mud to the land surface, and then with selected sand and gravel by use of a tremie pipe, set initially below the top of the screen, to a point at least 30 feet above the top of the screen. Water samples shall then be pumped from inside the casing. After this water-sampling operation is completed to the City's satisfaction, the casing and screen shall be pulled from the hole. Then the hole shall be filled by use of a tremie pipe with sand and gravel to the bottom of the second deepest zone from which water samples are desired in this hole. Then a second temporary gravel-packed well shall be made, with screen opposite this zone, following the same procedure and specifications as in the sampling of the zone below. Following the sampling of the second deepest zone, the next deepest zone shall be sampled, and so on until water samples have been obtained from all the zones from which the City desires such samples. Following all water-sampling procedures, the pilot hole shall again be cleaned out to its bottom.

3. Development: After the materials are set in place for a water-sampling operation, the screened section shall be developed by washing with clear water and by agitating with air-lift pumping until the test well is fully developed and producing water which is clear and free from drilling fluid. If development with air fails to produce sufficient yield, Contractor shall continue development with surge plunger, jetting tool, or other agitating equipment as required to achieve a sustained yield acceptable to the City.

4. Pumping:

   a. When the test well has been satisfactorily developed and when the water from the well is clear and acceptable to the City, the air development line shall be removed and a submersible pump shall be installed. The submersible pump shall have the capacity of at least 100 gallons per minute at 500 feet of head. Provision for water level measurement by electrical measuring line or steel tape shall be made. Water level recordings shall be taken before, during and after pumping.

   b. The test well shall then be again pumped continuously with the submersible pump until the water is clear and acceptable to the City, but in no case shall the well be pumped for less than a total of 36 hours at any zone (section) sampled. The pumping rate shall be measured every 30 minutes during airlift and submersible pump pumping periods.

   c. A record of development and pumping time shall be maintained by the City. Development and pumping time shall start only after a

satisfactory seal above the screen is obtained, the air line for pumping is installed, and water is being produced from the formation. Time spent on rig, tool or equipment repairing, and waiting time for tools or equipment shall not be logged as pumping time. Should the seal fail to hold until all water sampling operations and water level measuring operations are completed as determined by the City, none of the preceding pumping time shall be charged to or paid for by the City.

5. Water Samples:

   a. Samples of the water shall be collected from each zone when the minimum pumping period has elapsed and the water produced is acceptable to the City. The Contractor shall not stop pumping the pilot hole until the City authorizes the pumping to be stopped. The rate of pumping shall be measured and recorded together with the time of pumping. The temperature, pH and conductivity of the water pumped shall be measured and recorded.

   b. The Contractor shall collect water samples as may be required by the City at the end of the pumping period. Each sample shall be labeled with the hole number, date, time of collection, pumping rate, temperature of water, depth of screen setting, and name of collector. The Contractor shall have a qualified laboratory, approved by the City, take the necessary samples and make a complete chemical and radiological analysis of the water to include determination of all constituents included in an analyses of public drinking water by the TCEQ, as listed in the latest version of TCEQ Chapter 290 Subchapter F, for drinking water, including:

      1) Inorganic compounds
      2) Synthetic Organic contaminants
      3) Volatile Organic contaminants
      4) Radionuclides: Gross Alpha, Gross Beta, Radium-226, Radium-228, Total Uranium and Radon-222
      5) Secondary Standards
      6) Lead and Copper
      7) Turbidity
      8) Additional constituents: Sodium, potassium, calcium, carbonate, bicarbonate, silica, nickel, total hardness and Langelier index

      All analytical tests on water samples shall be performed by a TCEQ-accredited laboratory that is accredited for each of the specific tests being performed. The laboratory personnel also shall collect two one-gallon water samples and/or other water samples required by

the City or Engineer and deliver the samples to the Engineer as a back-up sample if needed for additional analyses.

Contractor is responsible for all additional pumping, equipment and water sample analyses and all related costs that are necessary, if the pilot hole water sampling and analyses are not completed as specified.

9) Samples to be kept at 4 degree centigrade in an ice cooler with appropriate preservatives during transport to the analytical laboratory.

10) Provide three copies of results of all analyses to City along with the QA/QC data.

6. Water Level Measurements: Measurements of water levels inside the test well casing shall be made and recorded during the test well pumping period and for 2 hours after pumping has been stopped. The water level measurements are to be made at intervals not exceeding 15 minutes each and the exact time of each measurement is to be recorded. The measurements shall be made with a steel tape or electric measuring line to the nearest one-hundredth of a foot, and the exact position of the measuring point at the surface shall be described.

7. Lost Materials in Hole: After the water level measurements are made, the Contractor shall remove the sampling materials consisting of casing, screen and other fittings from the pilot hole. In the event the Contractor is unable to remove all materials from the pilot hole, the Contractor, and not the City, shall be responsible for those materials lost in the hole and no extra payment shall be due to the Contractor for such loss. Further, if the City so requires, the Contractor shall take such measures as may be necessary at his own expense to remove the lost materials, or the Contractor shall drill, at his own expense, another hole at the site to replace the hole lost as the result of the loss of these materials. In the event it is necessary for the Contractor to drill another hole at the site, the City will require the Contractor to plug the abandoned hole, entirely at the Contractor's expense, as described under paragraph 3.01 E of this Section.

D. Contractor's Evaluation: After completion of the pilot hole according to and meeting all these Specifications, the Contractor shall p resent a written report to the City giving his recommendations for satisfactory completion of a water well meeting these Specifications and the required guarantees. The report shall include the sieve analyses of the formation samples, chemical analysis, results from any water sampling operations, the material settings recommended by the Contractor, the size of the screen openings that has been selected by the Contractor based on the character and sieve analyses of the formation samples, and the type and grading

of gravel that the Contractor has selected for the well. The report shall also include a written technical analysis of the geophysical logs with regard to indication of natural gas and uranium rich zones by the logging company professional analyst acceptable to the City. Samples of the gravel and sieve analyses of the gravel and the gravel company's certificate shall be delivered to the City for approval at the time the Contractor submits his evaluation of the pilot hole. The City's approval of the gravel or any other part of the Contractor's recommendations, however, shall in no way relieve the Contractor of meeting all the well performance guarantees required by these specifications and other contract documents.

E. Abandonment:

1. The amount to be paid by the City for mobilization will be as per Item 1 in Document 00410 - Bid Form. The amount paid by the City for drilling, sampling and logging the pilot hole, abandonment and plugging of the pilot hole, and site cleanup if a pilot hole is abandoned will be based on Items 14 and 19 in Document 00410- Bid Form.

2. After the pilot hole is completed and the Contractor has made his written report to the City and the City has reviewed the Contractor's report, the City shall have the right to abandon the hole because of in its opinion the water-bearing formations have been found inadequate to make a well producing water of satisfactory quality and meeting the guarantees specified herein, or in case the City and Contractor cannot agree on the material settings or other recommendations by the Contractor for the well. The City Engineer may, at his option, lower the specific capacity guarantee and/or the suspended solids guarantee, all as the City considers to be reasonable. Any such decision by the City Engineer must be in writing, and the Contractor shall be bound by it. In the event that the pilot hole is abandoned, it shall be filled by placing neat cement plugs as required by the City and fresh heavy mud into the hole from the bottom of the hole to the land surface. The method used and the amount of cement and type and source of fresh heavy mud shall be approved by the City. The maximum amount of cement required by the City shall be 150 sacks.

3. In the event the pilot hole is abandoned by decision of either the City or Contractor after it is completed according to and meeting all these Specifications, the site shall be cleaned up as provided in these Specifications and the City shall pay the Contractor for the abandoned pilot hole in accordance with Items 1, 14 and 19 in Document 00410 - Bid Form. This amount plus the cost for any water samples collected from the pilot hole then shall be the total payment made by the City to the Contractor for the work at this site. If the City elects, this contract shall then be canceled with respect to this particular well, and no further payment shall be made to the Contractor for work or materials on this well. Alternatively, after making the payment to the Contractor for the abandoned pilot hole, the City shall

also have the right to require the Contractor to start another well anew at another site in the same general area, with no further additional payment, at the same prices given in the Proposal for the work at the original site.

3.02 WATER WELL

A. General: Based on the results of the pilot hole, and after receiving the Contractor's complete written recommendations and accompanying submittals as provided in these Specifications, the City will review the Contractor's recommendations, including the depth to which the Contractor recommends that the surface casing be set and the depths and lengths of the blank pipe and screen in the production casing, and the Contractor's recommendations shall be subject to the City's acceptance or rejection. The City shall be all owed a maximum of 6 working days for this review process. If the City requires more time than this, the scheduled completion time for the project will be increased accordingly, but no extra pay shall be due the Contractor for any down time. After this review process, either the City or the Contractor may elect to abandon the pilot hole as provided in paragraph 3.01 E of this Section. Otherwise, the Contractor shall construct the well in the pilot hole, meeting all the provisions and guarantees of these Specifications and other contract documents.

B. Plugging Pilot Hole Below Bottom of Well: If the pilot hole has been drilled appreciably deeper than the total depth selected for the water well, the City may require that the pilot hole immediately below the bottom of the proposed water well be plugged with Portland cement. The placement of the cement plug shall be by pumping a cement slurry weighing approximately 15 pounds per gallon through the drill pipe into the hole at the depth directed by the City. The plug shall contain 30 sacks of cement unless otherwise ordered by the City. The cement shall be tested at least 24 hours after placement, before the pilot hole is underreamed to the full diameter for the well, by placing at least 6,000 pounds of the weight of the drill pipe on top of the plug. If the plug is not in an acceptable position, the top of the plug shall be corrected at the Contractor's expense. The Contractor will be allowed to conduct reaming operations for setting the surface casing in the hole during the cement setting time. The drilling fluid shall be treated to eliminate all cement contamination from the drilling mud prior to beginning any drilling operations after placing the cement plug.

C. Surface Casing:

1. Reaming: The pilot hole shall be stage pilot reamed for the surface casing to a minimum diameter of 6 inches greater than the outside diameter of the surface casing for the well. The hole from 10 feet below the setting depth of the surface casing shall not be reamed to a diameter greater than 12-1/4 inches prior to setting and cementing the surface casing, without prior approval of the City. The surface casing shall be 20-inches O.D. in diameter.

2. Alignment Survey:

   a. After reaming and before the surface casing is installed, the alignment of the hole shall be checked by a Baker-Hughes INTEQ or Gyrodata continuous alignment survey, or approved equal, with readings at intervals no larger than 16 feet from the land surface to the depth selected for the bottom of the surface casing. The surveying instrument shall be held in the center of the hole with a guide or guides. The outside diameter of the guide shall be no more than 2 inches smaller than the nominal diameter of the hole, and the length of the guide shall be at least 16 feet. The alignment survey shall be interpreted and plotted at the well site by the well surveying company before the surface casing is placed in the hole. Two copies of the data and interpretive graphs shall be furnished to the City.

   b. For any 300-foot or shorter section of the hole surveyed, the center line of the hole shall not vary or deviate more than 10 inches from a straight line connecting the two center points of the hole at the ends of the section; and a straight line connecting the two center points of the hole at the ends of any 100-foot section shall not vary or deviate from a vertical line through one of these points by more than 18 inches in the 100-foot section. If the alignment survey shows that a straight line connecting the two center points of the hole at the ends of any 100-foot section varies or deviates from a vertical line through one of these points by more than 18 inches in the 100-foot section, or if the alignment survey shows that the center line of the hole varies or deviates more than 10 inches from a straight line connecting the two center points of the hole at the ends of any 300-foot or shorter section, the Contractor shall correct the alignment and show by another alignment survey that it is corrected, or abandon and plug the hole and drill another hole at the site.

3. Setting and Welding:

   a. The depth of setting is to be selected by the Contractor, subject to the City's acceptance, and welding of the casing shall be done in accordance with subsection 3.04 of Section 01110 - Summary of Work.

   b. The lower end of the surface casing shall be fitted with a standard combination float and guide shoe.

   c. The top of the casing shall extend 36 inches above the land surface prior to constructing the concrete pump foundation.

4. Centering Guides: The surface casing shall be equipped with sets of four centering guides, with the first set located about 4 feet above the bottom of the casing and then one set at approximately 80-foot intervals above that to the surface to hold the casing in the center of the hole.

5. Sizing and Alignment Test Inside Casing: After the surface casing is set in the hole, the Contractor shall run a 40-foot length of pipe or a dummy through the entire length of the casing to make sure that the casing has remained round and there are no sharp bends or "doglegs" in its alignment. This test, at the Contractor's option, may be conducted before or after the surface casing is cemented in place. The outer diameter of the pipe shall not be more than one inch smaller than the inside diameter of the surface casing. The pipe shall have a wall thickness of 3/8 inch. If the Contractor wishes, he may substitute a 40-foot dummy of equal rigidity for the pipe. The dummy shall have three rings attached to it, one at each end and one in the middle. Each of the rings shall be truly cylindrical and the outer diameter of the rings shall be no more than one inch smaller than the inside diameter of the casing. Should the pipe or dummy fail to move freely through the entire length of the surface casing, the Contractor shall at his own expense correct the problem so that the pipe or dummy does move freely through the entire length of the casing, or abandon and plug the hole and drill another hole at the site.

6. Cementing:

    a. The surface casing shall be cemented in place with a minimum of 3 inches of cement grout around the outside of the casing from bottom to top. Following setting of the casing and placement of the cementing pipe, circulation of drilling fluid in the annulus outside the casing shall be established for at least 30 minutes prior to starting the cementing operation. The cement shall be placed by a standard Halliburton cementing method that complies with 30 TAC §290.41(c)(3)(C), involving pumping from the bottom of the casing up the outside of the casing in a continuous operation, and by a well cementing company approved by the City. The cement used shall be in accordance with paragraph 2.02 A of this specification section. The slurry shall be weighed with a standard mud balance and the slurry weight shall be maintained as specified during the cementing operation. A reserve of at least 40 percent over the calculated volume of cement required for the cementing shall be stocked on location as a safety factor to fill washouts in the hole. The cement after placement shall be allowed to set for a period of not less than 36 hours, after which the plug at the bottom of the casing may be drilled. The drilling fluid shall then be treated to eliminate all cement contamination prior to beginning any other drilling operations.

D. Underreamed Hole Below the Surface Casing:

1. Method of Reaming, Diameter, and Section Gauge Log: The hole below the surface casing shall be underreamed to the required diameter to a depth at least 20 feet below the lowest water-bearing formation to be screened in the well. The underreaming shall be done with a Baker hydraulic underreamer or approved equal. After the hole has been underreamed to the total depth, the wall of the underreamed hole shall be scraped through its entire length with a Baker hydraulic underreamer or approved equal. A Schlumberger, Baker-Hughes or Halliburton Section Gauge Log shall be made of the underreamed hole after the underreamed hole is scraped. If the section gauge log shows that the diameter of the underreamed hole is less at any place than the diameter selected for the underreaming, the Contractor, if required by the City, shall increase the diameter to the required amount and show that this has been done by one or more additional Schlumberger or equal Section Gauge Logs made at the Contractor's own expense. Also, if required by the City, the wall of the underreamed hole shall again be scraped through its entire length with a Baker hydraulic underreamer or approved equal after any additional underreaming.

2. Desander: A desander shall be provided to remove sand from the drilling fluid during the underreaming of the hole below the surface casing. The sand content in the drilling fluid being pumped through the drill pipe shall be less than 4 percent during the underreaming operations for the well.

3. Bottom of Well: A 5-foot section below the bottom of the underreamed hole shall be pilot reamed to a diameter of approximately 4 inches greater than the diameter of the production casing to be installed.

E. Production Casing:

1. Material Settings:

a. The lengths of the several components of the screen and blank pipe in the production casing and the positions at which the several components of the production casing shall be set in the well have been estimated as shown by the base lengths given in the Proposal and on the plans. The exact material settings will be selected after the pilot hole has been completed.

b. Blank sections of production casing between aquifer sands screened shall not exceed 30 feet. A five-foot section of screen shall be set and alternate with each 30-foot section of blank production casing set opposite clays.

c. The bottom end of the production casing shall consist of 25 feet of blank pipe, fitted with a back pressure valve, wooden wash plug and set nipple.

d. The top of the blank pipe in the production casing in the completed well shall be 80 feet above the bottom of the surface casing.

2. Centering Fins and Centralizers on Production Casing: Groups of three centering fins (see Drawings) shall be placed on the outside of the blank pipe in the lap between the production casing and the surface casing. The first group of centering fins shall be about 5 feet above the bottom of the surface casing and a second group about 5 feet below the top of the blank pipe in the production casing. Centralizers shall be used at approximately 80-foot intervals between the production casing and the underreamed hole.

3. Welding: Welding of the production casing shall be done in accordance with subsection 3.04 of Section 01110 - Summary of Work.

4. Alignment Test Inside Production Casing: After the production casing is made up and while it is still hanging in the top of the hole, the top 150 feet of the production casing shall be tested as follows. The Contractor shall run a 40-foot length of pipe or a dummy through the 150-foot length of the production casing to make sure that it has remained round and there are no sharp bends or "doglegs" in its alignment. The outer diameter of the pipe shall not be more than one inch smaller than the inside diameter of the production casing. The pipe shall have a wall thickness of at least 1/4 inch. If the Contractor wishes, he may substitute a 40-foot dummy of equal rigidity for the pipe. The dummy shall have three rings attached to it, one at each end and one in the middle. Each of the rings shall be truly cylindrical, and the outer diameter of the rings shall be no more than one inch smaller than the inside diameter of the liner. Should the pipe or dummy fail to move freely through the entire length of the production casing tested, the Contractor shall at his own expense correct the problem so that the pipe or dummy does move freely through this length of the production casing.

F. Gravel Wall:

1. Graveling Operation: After the production casing is in place, the annular space between the production casing and the face of the underreamed hole and between the production casing and the surface casing shall be filled with selected gravel to about 5 feet below the top of the liner in the well. The graveling operation shall be continuous until the top of the gravel is at the required position. The gravel shall be placed in the well through a gravel line which shall first be set at the bottom of the well and gradually withdrawn as the deposited gravel rises. All of the gravel shall be pumped from the surface through the gravel line. The amount of gravel placed in each 100

feet of the underreamed hole shall be measured and recorded and the record maintained concurrently with the gravelling operation. Measurements shall be made in a manner acceptable to the City and shall be accurate within 10 percent. A wash line shall be set inside the liner to the bottom of the production casing, and at the Contractor's option the well shall be washed through the back pressure valve during the graveling operation. A quantity of gravel amounting to at least 40 percent more than the calculated volume of the annular space between the underreamed face of the well and the outside of the liner, plus the annular space between the liner and the surface casing, shall be stocked on location before the graveling operation is started. The gravel shall be protected from contamination with soil. After development, testing and completion of the well, the gravel shall be checked and returned to the above required level.

2. Disinfecting Gravel: The gravel shall be disinfected by mixing granulated calcium hypochlorite or sodium hypochlorite with the gravel during placement in the well.

3.03 WELL DEVELOPMENT

A. Methods and Purposes: Immediately after the graveling operation is completed, the well shall be thoroughly developed by mechanical and chemical methods consisting of the simultaneous use of mud-removing chemicals with agitation and washing with a tandem agitator, air-lift pumping with a tandem agitator, and backwashing and pumping with the test pump equipment specified he rein, to remove the mud cake from the face of the water-bearing formation and any mud material that has penetrated the gravel pack and the water-bearing formation, and to orient and stabilize the water-bearing materials and gravel pack, and to obtain optimum production from the well. The methods and procedures used for development shall be at the option of the Contractor but subject to approval by the City. The City's approval of the methods and procedures used by the Contractor shall in no way, however, relieve the Contractor of meeting all the well performance guarantees required by these Specifications and other contract documents.

B. Development Time:

1. The required minimum development time for the well shall be 30 eight-hour tours or 240 hours.

2. Development of the well shall not be stopped without approval of the City, before at least the required number of 8-hour tours have been spent on development.

3. A record of development time shall be maintained during the development phase. Except for the time required for the first installation of the test pump and engine, the time required for installation and operation of development

tools and equipment and development tests shall be recorded as development time. Time spent on the first installation of the test pump and engine and on rig, tool or equipment repairing, or waiting time for tools or equipment shall not be logged as development time.

4. Any time spent in developing a well in excess of the minimum required herein shall not be charged against the completion time given in the Proposal.

C. Disinfection: Before the well is agitated, the agitator shall be washed with a solution containing at least 200 mg/l chlorine. After the well is agitated and before the test pump is installed, the well shall be disinfected in accordance with ANSI/AWWA C654 with granulated calcium hypochlorite or liquid sodium hypochlorite. The disinfectant shall be placed in the screened section of the well through an agitator. After the test pump is installed, granulated calcium hypochlorite (or sodium hypochlorite) shall be poured in the well and the well agitated by turning the pump on and off without discharging water at the surface. The hypochlorite shall be dissolved in a solution at the ground surface and applied such that a concentration of at least 50 mg/l of available chlorine is available in all parts of the well after 8 hours contact time. Chlorine in the water produced from the well following disinfection shall be neutralized before the water is allowed to leave the site.

D. Development Tests: Water production tests and measurements of the static and pumping water levels shall be made at intervals during the development to evaluate the progress made by the development operations. The production tests shall be made with test pump equipment and at various rates of production. A pumping test shall be run during part of the latter portion of the development to determine whether the guarantees as described in subsection 3.05, Specific Capacity Guarantee, and subsection 3.06, Suspended Solids Content Guarantee, of this Section, appear to have been met. These tests during development shall not be counted as part of the pumping tests described in subsection 3.04, Pump Testing, of this Section. The Contractor shall not call for the pumping tests specified in that subsection until he has data from development tests to indicate that the guarantees with respect to specific capacity and suspended solids content can be met in the final tests. The Contractor shall give the City at least 24 hours notice before the start of the pumping tests in subsection 3.04, Pump Testing, of this Section, and shall not start such tests between 5:00 p.m. Friday and 8:00 a.m. Monday or on legal holidays without permission of the City.

E. Chemical Analysis: During the latter part of the development, the Contractor shall have a preliminary water quality analysis made of the water, to include at least the chloride, sulfate, hard ness, specific conductance, and iron, and shall furnish the analysis to the City prior to initiation of the final pumping tests.

F. Cleaning Bottom of Well: After developing with the agitator is completed, the well shall be sounded; and if any material is found inside the well less than 20 feet

below the bottom of the lowermost screen, it shall be cleaned out of the well before the well is tested. The time required to clean out the bottom of the well shall be considered development time.

3.04 PUMP TESTING

A Test Pump Equipment:

1. Contractor shall furnish, install and operate a test pump complete with engine, air-line water-level measuring equipment, and open-end pipe orifices or turbine flow meter for measuring pumping rates at rates stated herein. The orifices or turbine flow meter used shall be recently calibrated and the Contractor shall provide the City verification of the calibration results and of the test method and procedure used. The discharge pipe shall be straight and level for a distance of at least 12 feet immediately upstream of the open-end orifice or turbine flow meter. The pump and engine shall be in good operating condition. All water-level and pumping-rate measuring equipment shall be in good condition and installed to the City's satisfaction.

2. The pipe orifices or turbine flow meter shall be capable of measuring pumping rates from 500 to 3,500 gallons per minute.

3. The pump and engine shall have a capacity ranging from not more than 500 gallons per minute with a pumping level no deeper than 300 feet to at least 3,500 gallons per minute with a pumping level of 550 feet. The pump shall be equipped for depths of pump settings at least as great as 550 feet.

4. The Contractor shall provide evidence to the City that the pump and engine have the required capacities before they are installed.

5. A valve shall be provided on the pump discharge near the pump to assist in regulating the rate of discharge. The valve shall be at least 15 feet upstream of any flow measuring device.

B. Pumping Test Schedule: Unless otherwise required by the City, the pumping tests of the well shall be made for a period of 96 hours according to the schedule described herein. However, without any extra charge by the Contractor, the City shall have the right to change this schedule as it sees fit and to increase or decrease the number of hours of actual pumping time within the base amount of 96 hours of testing time herein specified.

C. Step Tests: A 24-hour series of step tests shall be run at rates of production as determined by the City. The City m ay select any rates within the capacity of the pumping equipment specified and may require that the steps be run in any order. Measurements of the rates of production and water levels shall be taken at 15-minute intervals during the tests. Measurements of the water level shall be made

with a steel tape or electric measuring line to the nearest 100th of a foot. Immediately prior to the step tests and after the pump has been installed, the pump shall not be operated for a period of at least 3 hours. After the pumping for the step tests has been completed, and prior to the pumping for the continuous test, the pump shall not be operated for a period of at least 18 hours. During these shutdown periods, water-level measurements shall be made at 15-minute intervals.

D. Continuous Test: After the 18-hour recovery period, the well shall be pumped continuously for 36 hours at a constant rate of production as determined by the City. The City may select any rate within the capacity of the pumping equipment specified. Measurements of the rate of production and depth to water level shall be taken at 15-minute intervals during the first 24 hours of pumping and at 30-minute intervals during the remainder of the pumping period. After pumping for the continuous test has been completed, measurements of the recovery of the water level shall be made at 15-minute intervals for an 18-hour period.

E. Removal of Pump: After the pumping for the pumping tests required by the City is completed, the pump shall not be removed from the well until the recovery period designated by the City is completed.

F. Chemical and Radiological Analyses of Water: The Contractor shall collect such water samples as may be required by the City at the end of the 36 hour pumping period. Each sample shall be labeled with the well number, date, time of collection, pumping rate, temperature of water, depth of screen setting, and name of collector and delivered immediately to the City. In addition, the Contractor shall have a qualified laboratory, approved by the City, take the necessary samples and make a complete chemical and radiological analysis of the water to include determination of all constituents included in an analyses of public drinking water by the TCEQ, as listed in the latest version of TCEQ Chapter 290 Subchapter F, for drinking water, including:

1. Inorganic compounds
2. Synthetic Organic contaminants Volatile Organic contaminants
4. Radionuclides: Gross Alpha, Gross Beta, Radium-226, Radium-228, Total Uranium and Radon-222
5. Secondary Standards
6. Lead and Copper
7. Turbidity
8. Additional constituents: Sodium, potassium, calcium, carbonate, bicarbonate, silica, nickel, total hardness and Langelier index

All analytical tests on water samples shall be performed by a TCEQ-accredited laboratory that is accredited for each of the specific tests being performed. The laboratory personnel also shall collect two one-gallon water samples and/or other water samples required by the City or Engineer and deliver the samples to the Engineer as a back-up sample if needed for additional analyses.

Contractor is responsible for all additional pumping, equipment and water sample analyses and all related costs that are necessary, if the pilot hole water sampling and analyses are not completed as specified.

9. Samples to be kept at 4 degree centigrade in an ice cooler with appropriate preservatives during transport to the analytical laboratory.

10. Provide three copies of results of all analyses to City along with the QA/QC data.

G. Additional Pumping Tests: If the Contractor resumes development operations after any part of the pumping tests described herein is made, the Contractor may be required by the City to repeat part or all of the pumping tests previously made, at his own expense with no charge to the City.

3.05 SPECIFIC CAPACITY GUARANTEE

A. In order for the Contractor to obtain the full price for the well, as determined from his Proposal and other provisions of this contract, the well shall produce consistently, as determined by the City from the final tests, its "Guaranteed Pumping Rate-Specific Capacity" with at least its "Guaranteed One-Hour Specific Capacity" all as specified in paragraph B below.

B. Guaranteed pumping rate-specific capacities expressed in gpm/ft (gallons per minute per foot of water-level drawdown) are as follows:

	Forest Cove Well No. 5
"Guaranteed Pumping Rate"	1,500 gpm
"Guaranteed One-Hour Specific Capacity @ Guaranteed Pumping Rate"	20.0 gpm/ft
"Minimum Acceptable One-Hour Specific Capacity @ Guaranteed Pumping Rate"	15.0 gpm/ft
"Penalty Rate - Specific Capacity" per gpm/ft	$ 8,000.00

C. If the City finds the measured one-hour specific capacity at the "Guaranteed Pumping Rate" to be less than the "Guaranteed One-Hour Specific Capacity," but greater than the "Minimum Acceptable One-Hour Specific Capacity," a penalty will

be deducted by the City from the amount otherwise due the Contractor under his Proposal and other provisions of this contract. This penalty will be based on the well's final consistent specific capacity and will amount to the "Penalty Rate-Specific Capacity" for each one gallon per minute per foot of drawdown that the well's final consistent one-hour specific capacity at the "Guaranteed Pumping Rate" is less than the "Guaranteed One-Hour Specific Capacity," as determined by the City.

D. If the Contractor is unable to make the well as specified so that it will consistently produce its "Guaranteed Pumping Rate-Specific Capacity" with at least the "Minimum Acceptable One-Hour Specific Capacity," as determined by the City, the City will not accept the well and no payment will be due the Contractor for the well or any other work and equipment at this site. The Contractor shall, however, be obligated to clean up the site at no charge to the City as provided in these specifications.

E. The measured one-hour specific capacity is to be determined by the City and shall be the gallons per minute pumped divided by the total drawdown of the water level in the well, in feet, caused by pumping the well constantly at the "Guaranteed Pumping Rate" for one hour.

3.06 SUSPENDED SOLIDS CONTENT GUARANTEE

A. During any or all of the pumping tests described in subsection 3.04, Pump Testing, of this Section, the suspended solids content of the water from the well shall be measured periodically by the Contractor, subject to the approval of the City, with an 8-liter Imhoff cone, catching the water at the lower edge of the discharge orifice or downstream of the turbine flow meter at the bottom of the pipe and letting the suspended solids settle into the tip of the cone for 10 minutes. The Contractor shall provide at least four such Imhoff cones, each of which has been calibrated by a laboratory acceptable to the City, and for which a laboratory certificate is provided to the City.

B. In order for the Contractor not to be penalized for excess suspended solids in the water, the water produced from the well shall, on a consistent basis, not contain more than 0.1 milliliter of suspended solids per 8 liters of water at any time after 1/2 hour and 0.05 milliliter of suspended solids per 8 liters of water at any time after 3 hours of continuous pumping from the well at the "Guaranteed Pumping Rate-Suspended Solids Content" as specified in paragraph E below, and the well shall also meet these requirements at all lesser pumping rates.

C. In case the City finds that the water produced from the well fails to meet the above requirements for no penalty, but consistently does not contain more than 0.2 milliliter of suspended solids in 8 liters of water at any time after 1/2 hour and 0.05 milliliter of suspended solids in 8 liters of water at any time after 3 hours of continuous pumping from the well at the "Guaranteed Pumping Rate-Suspended

Solids Content," and the well meets these reduced requirements at all lesser pumping rates, a penalty equal to the "Penalty-Suspended Solids content" shall be charged to the Contractor. This penalty shall be deducted from the amount otherwise due the Contractor for the well, in addition to any penalty assessed the Contractor under subsection 3.05, Specific Capacity Guarantee, of this Section.

D. If the Contractor is unable to make the well as specified, however, so that under the above-described tests the water consistently contains more than 0.2 milliliter of suspended solids in 8 liters of water at any time after 1/2 hour and 0.05 milliliter of suspended solids in 8 liters of water at any time after 3 hours of pumping from the well at the "Guaranteed Pumping Rate-Suspended Solids Content," or if the well fails these reduced requirements at any lesser pumping rate, the City shall not accept the well and no payment will be due the Contractor for the well or any other work and equipment at this site. The Contractor shall, however, be obligated to clean up the site at no charge to the City as provided in these specifications.

E. Guaranteed pumping rate-suspended solids contents are as follows:

	Forest Cove Well No. 5
"Guaranteed Pumping Rate - Suspended Solids Content"	1,500 gpm
"Penalty - Suspended Solids Content"	$ 60,000.00

3.07 NATURAL GAS

A. If natural gas is encountered in the well in such quantities or insufficient sand is available for screening that, in the opinion of the City, the gas or insufficient sand will prevent the specific capacity guarantee and/or the suspended solids guarantee from being met, the City may at its option lower the specific capacity guarantee and/or the suspended solids guarantee, all as the City considers to be reasonable. Any such decision by the City must be in writing and the Contractor shall be bound by it.

3.08 WELL CLEANING

A. After testing of the well is completed, the well shall be sounded; and if there is more than 5 feet of sand or other material inside the well above the back pressure valve, this material shall be cleaned out of the well. The well shall be cleaned of foreign substances including, but not limited to, oil, grease and scum on the water's surface.

3.09 CAMERA SURVEY

A. After the pump foundation has been constructed, the well has been sounded and any sand or other material inside it has been removed, the Contractor shall perform a survey with a color camera having two lenses and light sources with instantaneous side view capability, camera survey of the well bore to its complete depth. Elevation zero in the camera survey shall be set at the top of the concrete foundation. The original and two copies of the color camera survey shall be furnished to the City on DVD.

3.10 WELL CASING CORROSION CONTROL SYSTEM (Not Used)

3.11 DISINFECTION

A. During the latter stages of development pumping of the well, after at least 15 minutes of pumping to waste, water having a chlorine residual of 0.4 mg/l or less (following the specified disinfection procedures in paragraph 3.03 C), samples of water shall be collected in sterile containers in accordance with ANSI/AWWA C654 and tests shall be made for coliform organisms. The sample shall be taken by the contractor and the test made by the City of Houston East Water Treatment Plant on Federal, and the City shall be furnished a copy of the laboratory report prior to completion of the step tests. If any coliform organisms are found present in the sample, the Contractor shall redisinfect the well and have the water resampled as stated above until such time as no coliform organisms are found present in a water sample after at least 500,000 gallons of water have been pumped from the well following disinfection, or until such time as the City becomes convinced that coliform organisms exist naturally in the water-bearing formation and are not present in water produced from the well as a result of the operations of the Contractor. The Contractor shall not move the well development rig from the well until this provision is met.

B. The water produced from the well following disinfection shall be dechlorinated to a level of 3.0 or less mg/l chlorine before the water is allowed to leave the site.

3.12 CAPPING

A. After testing and after approval of the well by the City, the well shall be capped in a manner approved by the City. Before capping, it shall be disinfected by adding 65 percent calcium hypochlorite tablets, or an amount of liquid sodium hypochlorite equivalent in total chlorine, in sufficient quantity to obtain 50 mg/l free chlorine residual in the well.

3.13 ABANDONMENT OF WELL

A. In the event it is necessary to abandon the well, the Contractor shall, if directed by the City, fill the abandoned well with fresh heavy mud and cement as directed by

the City, and no payment shall be made by the City to the Contractor for the well or its plugging. In this event, the Contractor shall first have the right, if he chooses, to salvage any materials he has previously set in the well. The types and sources of fresh heavy mud and cement shall be approved by the City.

WELL DIMENSIONS SCHEDULE

	Forest Cove Well No. 5
Pilot Hole	
Depth, feet	1,150
Water Well	
Depth, feet	985
Surface Casing	
Diameter, Inch Depth, feet Vertical Length, feet	20 710 713
Production Casing – Blank Pipe	
Diameter, Inch Depth to Top, feet Vertical Length, feet	14 630 173
Production Casing - Screen	
Diameter, Inch Depth to Top, feet Vertical Length in Sand, feet	14 635 182
Air Line Tubing	
¼-Inch PVC Coated S.S. Depth Setting, feet	460
Solution Tubing (Two Strings)	
1 ¼-Inch Schedule 80 PVC Depth Setting, feet	460
Well Performance	
Pumping Rate, gpm Specific Capacity, gpm/ft	1,500 20

END OF SECTION

Section 02536

DISCHARGE PIPING AND APPURTENANCES

PART 1 GENERAL

1.01 SECTION INCLUDES

A. This section includes the furnishing and installation of the discharge manifolds and appurtenances, splash-boxes, drain line and surface-runoff swales, and potable water collection line. All valves, pipe, fittings, couplings and gauges subject to the possibility of shut-in pump head shall be sized to be safe from burst failure when exposed to the expected pressure developed by the pump if shut in while operating, with the stages and column setting required for future operating conditions and with the static water level no lower than 250 feet. The work includes the furnishing and installation of valves, air and vacuum release assembly fittings, meters, gauges, discharge piping and supports. The work to be done under these specifications is described in part by the plans.

1.02 UNIT PRICES

A. No separate payment will be made for Work as required by this Section.

1.03 REFERENCE STANDARDS

A. Perform all work in this section in accordance with applicable sections of the latest editions of the following standards, except as modified in this specification.

1. American Water Works Association.
2. American Society of Testing and Materials.
3. National Sanitation Foundation (NSF).
4. American National Standards Institute.

1. 04 SUBMITTALS

A. Submittals shall conform to requirements of Section 01330 - Submittal Procedures.

B. Submit an affidavit stating that the valves, appurtenances and all materials used in their construction conform to the applicable requirements of the American Water Works Association (AWWA) standards, and this specification section and that all tests specified therein have been performed and all test requirements have been met.

C. All newly installed pipes and related products must conform to American National Standards Institute/National Sanitation Foundation (ANSI/NSF) Standard 61 and must be certified by an organization accredited by ANSI. This certification is to be submitted in writing to Engineer. Submit mill test certificates for all steel piping.

D. Submit shop drawings for all valves and operators, couplings, valve boxes and similar appurtenances for review and approval, prior to fabrication, shipment or purchase.

E. Operation and Maintenance Manuals: Six copies of the O&M Manuals shall be submitted for each item of equipment provided under this section.

PART 2 PRODUCTS

2.01 VALVES

A. Valves shall open counterclockwise.

B. Gate Valves:

1. Gate valves shall comply with AWWA Standards, latest edition. The valves shall be of the iron body, bronze mounted, resilient wedge, outside screw and yoke design. Gate valves installed in subsurface shall comply with Section 02521 - Gate Valves.

2. The valves shall be manufactured for a water working pressure of 250 pounds per square inch. The shell shall be manufactured for test pressure of 450 pounds per square inch.

3. The valves shall have flanged ends. The dimensions and drilling of the end flanges shall conform to the American National Standards Institute Specifications 816.1 for Class 125 cast iron flanges.

4. All gate valves shall be hand-wheel operated and open counterclockwise.

5. Gate valve stems shall be of a high-tensile strength manganese bronze or other non-corrodible metal which has a tensile strength greater than 60,000 pounds per square inch.

6. The valves shall be manufactured with lubricated packing stem seals.

7. Valves furnished under these specifications shall be Dresser M. & H. Style 881 -02, OS&Y flanged ends, or an equivalent approved by the City.

C. Check Valve: The check valve shall be a new iron body, globe style, silent check valve with stainless steel trim and resilient seating (Buna-N). The check valve plug, seat and spring shall be manufactured of stainless steel. The Buna-N resilient seating shall be compression molded (not glued or chemically bonded) onto the valve plug seat. The valve plug shall be center guided at both ends with a thru integral shaft and spring loaded for guaranteed silent shutoff operation. The stainless steel spring shall be helical or conical. The seat and plug shall be hand replaceable in the field for ease of maintenance. The flow area through the valve body shall be equal to or greater than the cross-sectional area of the equivalent pipe size. The check valve shall be guaranteed not to stick closed. The check valve shall be an APCO Series 600 globe style silent check valve, or approved equal, of 300-pound class with 125-pound flat-faced flanged ends.

D. Air and Vacuum Release Valve Assembly: The air and vacuum release valve body shall be constructed of cast iron and shall be equipped with flanged discharge connections. The float shall be constructed of stainless steel. The valve shall be sized according to manufacturer's instructions to accommodate a pump capacity of up to 2,800 gpm and shall be rated at a minimum working pressure of 250 pounds per square inch. The valve furnished shall be a 4-inch APCO #1704/152 soft durometer rubber seat for less than 30 psi, and 4-inch APCO surge check or an equivalent approved by the City, depending on the well discharge. Air and vacuum release valve discharge shall be "goosenecked" 180 degrees faced down, and screened with 304 stainless steel 16 mesh fabric. Details of this valve assembly shall be in accordance with the plans.

E. Brass Valves: One-inch or less brass valves shall be of all-brass construction with double discs and parallel seats and shall be warranted for a minimum working pressure of 300 pounds per square inch. Valves furnished under these specifications shall be of the Crane 431 type, or an equivalent approved by the City.

2.02 DISCHARGE MANIFOLD AND APPURTENANCES

A. Steel Water Pipe and Fittings:

1. All steel pipe furnished under these specifications shall comply with API specifications for line pipe standard 5L and with ASTM tentative specifications for welded and seamless steel pipe designation A53- 58AT.

2. The 12-3/4-inch steel pipe shall have a weight of at least 49.56 pounds per foot and a wall thickness of at least 0.375 inch, and be designed to withstand a test pressure of at least 1,000 pounds per square inch. The 8-5/8-inch steel pipe shall have a weight of at least 28.55 pounds per foot and a wall thickness of at least 0.322 inch, and be designed to withstand a test pressure of at least 1,000 pounds per square inch.

3. All steel fittings furnished under these specifications shall have a minimum wall thickness of 0.375 inch, shall be rated at a minimum 500 pounds per square inch working pressure, and shall conform to American National Standards Institute B16.9 and to ASTM Specifications A-234 for Grade A seamless carbon steel fittings.

4. The steel pipe shall be fitted with steel slip-on flanges, Class 150 or 300 as shown on the drawings. Steel fittings shall be fitted with steel weld-neck flanges, Class 150 or 300 as shown on the drawings. Dimensions and drilling of the flanges shall conform to American National Standards Institute B16.5.

5. The flanges shall be connected with rubber ring gaskets 1/16 inch thick.

6. Bolts shall conform with ASTM A 307, Grade B, with heavy hex nuts.

7. Flanged joints made up between steel and ductile iron pipe flanges shall be maintained electrically isolated by means of the use of an insulating kit (Pipeline Seal and Insulator or equal).

B. Flexible Coupling: The Flexible Coupling shall be Dresser Style 38 for steel pipe and shall be reinforced with the coupling harness, as shown on the drawings.

C. Pressure Gauge: The pressure gauge assembly shall be as shown on the plans. All fittings and other equipment shall be manufactured to withstand a working pressure of at least 300 pounds per square inch. The steel discharge pipe requires a ½-inch IPT thread-o-let welded to the top centerline of the header at the designated location for the pressure gauge assembly. The hole through the pipe wall inside the thread-o-let shall be drilled out.

D. Sample Cock: The sample cock shall be as shown on the plans. It shall be chrome plated, thread less male hose bib, Burlington Model #2001 O/E, with plain end and 3/4-inch IPS, thread inlet brass with chrome plating. The steel discharge pipe requires a 3/4-inch IPT thread-a-let welded to the side of the discharge header for a 3/4-inch Mueller H10046, or approved equal, corporation stop with inside IPT outlet for the sample cock assembly. The hole through the pipe wall inside the thread-a-let shall be drilled out.

E. High Pressure Safety Cutoff Switch Assembly: A high pressure safety cutoff switch assembly, United Electric Controls Model H100-358-1530, shall be installed in the system as shown on the plans. The steel discharge pipe requires a 1/4-inch IPT thread-a-let welded to the top centerline of the header at the designated location for the high pressure safety cutoff switch assembly. The hole through the pipe wall inside the thread-a-let shall be drilled out. The switch shall not contain mercury and shall have a push button reset.

F. Chlorination Connection Assembly: The chlorination connection assembly shall be as shown on the plans. The chlorination connection shall be located adjacent to the ground storage tank on the vertical piping, below the 90-degree bend, which turns to enter the tank, downstream of any flow measuring device and check valve.

The steel discharge pipe requires a 1-1/2-inch IPT thread-a-let welded to the top centerline of the discharge header at the designated location for a 1-1/2-inch Mueller H10046, or approved equal, corporation stop with inside IP thread outlet. The hole through the pipe wall inside the thread-a-let shall be drilled out.

A new 1-inch Schedule 80 PVC pipe shall be installed as shown on the plans and connected to the existing chlorine piping in the chemical room and to the new chlorination connection assembly.

G. Flow Meter:

1. Flow meter, as shown on the plans, shall be a new, propeller type, flanged end tube, flow meter rated for 150 psi working pressure, provided with a solid-state electronic transmitter, digital local totalizer display and shall be accurate within ±2 percent of true flow for the respective size meter range.

2. The propeller shall be three-bladed injection molded of thermoplastic material and resistant to normal water corrosion and deformity due to high flow velocities. The propeller shall be magnetically coupled with the electronic sensor through a sealed gearbox. The propeller shall incorporate a water-lubricated ceramic sleeve bearing supported on a ceramic-coated stainless steel spindle. The meter head cover plate shall be fabricated of cast iron and mounted with eight or more stainless steel cap screws. A right-angle gear shall be incorporated to transmit rotation of the propeller to the rigid stainless steel vertical totalizer shaft. The totalizer display shall be direct driven from the vertical totalizer shaft or magnetically d riven through a ceramic sleeve magnetic coupling on the vertical totalizer shaft and be isolated from the water flow by means of an O-ring sealed housing. No flexible cables will be accepted in lieu of direct drive or magnetic drive, as stated above.

3. The meter tube shall be fabricated of steel pipe incorporating a fusion epoxy coating, 12-15 mils minimum thickness applied by the fluidized bed method, with 150-pound ANSI flanged end connections and include a minimum of three steel straightening vanes. Flow meter shall be a solid state electronic propeller meter, tube-type meter head, Water Specialties Model No. ML04-D, or approved equal, for actual maximum flow.

4. The transmitter supplied with the flow meters, described above, shall utilize solid-state electronics and provide dual outputs of 4-20 milliamps (ma) and a true two-wire scaled electronic pulse rate output of 0-150 pulses per

minute (PPM) up to 4,000 gpm. The electronics shall be DC powered and shall accept any supply voltage between 10 and 30 volt DC without adjustment. The transmitter pick-up device which senses the mechanical rotation shall be totally solid state and non-contacting. The meter shall have a five digit readout for flow rate in gallons per minute (gpm) and the totalizer shall include an eight digit readout in gallons.

5. A certified factory volumetric flow test shall be performed on each flow meter to be supplied. The complete meter head assembly shall be tested for accuracy in the same pipe size tube that the meter will be mounted in. The flow test shall encompass the minimum, intermediate and maximum flow ranges of the respective size meter, as recommended by AWWA. The volume of water utilized to test any meter shall remain on the totalizer. The factory test facility shall be annually certified to an accuracy of ±0.1 percent traceable to the National Bureau of Standards. The City reserves the option to witness, at no cost to the Contractor and vendor, the required factory accuracy test on any flow meter to be supplied on this Contract. The certified factory test results shall be submitted to the ground-water production representative for approval prior to shipment of the flow meter to the Contractor for installation.

H. Conductor Casing Vent:

1. The conductor casing vent shall be located as shown on the plans. The casing vent tube shall be installed to achieve a 45-degree bend from vertical and exit the side of the concrete pump foundation. The casing vent tube terminates so as to provide a minimum 15-inch gap above the top of the foundation block to the mesh screens.

2. The casing vent consists of a 4" x 4" tee, two 4-inch nipples, and two 4-inch 90-degree elbows with #16 mesh screen of ASTM Standard A276-REV A-89 316 stainless steel securely fastened to the female end of each elbow with ASTM Standard A276-REV A-89 316 stainless steel bands.

I. Paint:

1. Exterior surfaces of valves, discharge head, pipe and fittings above ground shall be given a three-coat epoxy/epoxy/polyurethane system as described in paragraph 3.04B in this Section.

2. Paint color will be selected by City.

2.03 SPLASH-PAD INLET AND STORM SEWER SYSTEM

A. The splash-pad inlet and the subsurface drainage pipe shall be connected to the new storm sewer system. The storm sewer system shall be connected to the

existing culvert east of the well site. All storm sewer or drainage pipe within 50 feet of the wellhead shall be constructed of AWWA C900 or C905 PVC pipe with a DR of 18 or lower.

2.04 POTABLE WATER COLLECTION LINE

A. The underground portion of the potable water collection line between the discharge manifold and the ground storage tank connection shall be ductile iron pipe.

B. Ductile iron pipe and fittings shall conform to applicable provisions of Section 02501 - Ductile Iron Pipe and Fittings.

C. The ductile iron pipe shall have the diameter as shown on the Drawings.

PART 3 EXECUTION

3.01 DIMENSIONS

A. Elevation and length dimensions shown on the plans are only approximate and must be field-checked by the Contractor prior to assembly.

3.02 HIGH PRESSURE SAFETY CUTOFF SWITCH ASSEMBLY

A. This switch shall be connected in series with the overload relay in a manner approved by the City.

3.03 ROSSUM SAND CONTENT TESTER

A. A welded connection to the discharge pipe, with corp stop, shall be provided as shown on the Drawings for future installation of a Rossum Sand Content Tester by the City.

3.04 WRAPPING AND COATING

A. Internal Coating:

1. All material used for internal coating of steel carrier pipe must be NSF61 listed as suitable for contact with potable water as required by Chapter 290, Rules and Regulations for Public Systems, Texas Commission on Environmental Quality.

2. All steel pipe and fittings, above and below ground, shall be internally coated with either of the following systems.

a. Liquid epoxy in accordance with AWWA C210, "Liquid Epoxy Coating System for the Interior and Exterior of Steel Water Pipelines," except as modified herein. System shall consist of three coats of polyamide epoxy (no coal tar material) as follows:

1) Prime Coat: Two part, chemically cured, pigmented, polyamide epoxy; 4-6 mils DFT.

2) Intermediate Coat: Two part polyamide epoxy; 4-6 mils DFT.

3) Finish Coat: Two part polyamide epoxy; 4-6 mils DFT.

b. Total system to have a minimum DFT of 12 mils and a maximum DFT of 18 mils. Each coat to be in contrasting colors, with the prime coat being buff and the finish coat being white. All material shall be supplied by the same manufacturer. Coal-tar epoxy material is not permitted. Surfaces to be coated shall be abrasive blast cleaned to a near-white finish in accordance with SSPC-SP10 (NACE 2) to establish an average anchor profile of 2.0 to 3.0 mils, with no individual reading greater than 4.0 mils or less than 1.5 mils. Prior to coating, the prepared and cleaned surface is to be inspected for evidence of non-visible contaminants such as soluble salts and/or chlorides in accordance with NACE Technical Committee Report "Surface Preparation of Soluble Salt Contaminated Steel Substrates Prior to Coating," NACE Publication 6G186. The surface shall be recleaned as necessary until free of such contaminants.

c. Fusion-bonded epoxy in accordance with AWWA C213, "Fusion-Bonded Epoxy Coating for the Interior and Exterior of Steel Water Pipelines."

B. External Coating:

1. Above Ground

a. All aboveground steel piping and fittings shall be externally coated with a three-coat epoxy/epoxy/polyurethane system in accordance with AWWA C218, "Coating the Exterior of Aboveground Steel Water Pipelines and Fittings," Section 2.5, Coating System No. 4-91, except as modified herein.

1) Prime Coat: Two component, pigmented, catalyzed polyamide epoxy primer; 3-4 mils DFT.

2) Intermediate Coat: Two component, catalyzed polyamide epoxy; 4-6 mils DFT.

3) Finish Coat: Two component aliphatic polyurethane; 3-4 mils DFT.

b. Total system to have a minimum DFT of 10 mils and a maximum DFT of 14 mils. Each coat shall be in contrasting colors, with the prime coat being buff and the finish coat color selected by NHCRWA. All material shall be supplied by the same manufacturer. Surfaces to be coated shall be abrasive blast cleaned to a near-white finish in accordance with SSPC-SP1 0 (NACE 2) to establish an average anchor profile of 2.0 to 3.0 mils, with no individual reading greater than 4.0 mils or less than 1.5 mils. Prior to coating, the prepared and cleaned surface is to be inspected for evidence of non-visible contaminants such as soluble salts and/or chlorides in accordance with NACE Technical Committee Report, " Surface Preparation of Soluble Salt Contaminated Steel Substrates Prior to Coating," NACE Publication 6G186. The surface shall be recleaned as necessary until free of such contaminants.

C. General

1. All protective coatings shall be shop applied, except for field repairs and coating of field welded joints. The City may provide for witness of inspection and testing of shop applied coatings; however, such witness shall not relieve the Contractor of the responsibility to furnish material, perform work and provide quality control in accordance with the applicable AWWA standard and/or the requirements of these specifications. All field repairs shall be inspected and tested by the Contractor and approved by the City's inspector.

2. The substrate surface profile and minimum and maximum individual and total dry film thickness (DFT) indicated herein shall apply unless non-conformance with coating manufacturer's recommendation is indicated. No requirement of this specification shall cancel or supersede the specific written directions and recommendations of the specific coating manufacturer so as to jeopardize the integrity of the applied system. Dry film thickness shall be measured in accordance with SSPC PA2.

3. All shop coating and field repairs shall be field tested by the Contractor for holidays, pinholes or discontinuities at voltage levels required by the applicable AWWA standard and in accordance with the applicable NACE procedure, i.e. RPO 188, RPO 274, TMD 384, etc., latest revision. The test procedure, including voltage levels to be used, shall be submitted to the City prior to testing. All holidays shall be repaired in accordance with the

applicable AWWA standard. Documentation by a NACE certified inspector of compliance with the tests required herein shall be provided by the Contractor.

4. Handling, storage and field procedures for shop coated pipe shall be in accordance with the applicable AWWA standards. All pipe ends shall be adequately sealed and protected from damage during handling and storage, and such protection shall not be removed until immediately prior to installation. Pipe shall not be lifted using caliper clamps or hooks at ends of pipe. Any damage to the pipe or the protective coating from any cause during the installation of the pipe and before final acceptance by the City shall be repaired as directed by the Engineer's inspector and in accordance with the applicable standards.

5. The interior of pipe and fittings shall be kept clean of all foreign matter before installation and until the work has been accepted. Joint contact surfaces shall be kept clean until jointing is complete.

6. All AWWA standards referenced herein shall be the latest published revision thereof.

7. The Contractor shall furnish an affidavit of compliance that all materials and work furnished comply with the requirements of the applicable AWWA standards and these specifications.

3.05 PAINTING

A. Rust, dirt and other foreign materials shall be removed from the surfaces by sandblasting.

B. Special attention shall be given to the complete rem oval of oil and grease from all surfaces to be painted.

C. Galvanized pipe and brass shall be washed d own with fresh solvent and allowed to dry before being painted.

D. Nameplates will not be painted.

E. All painting shall be performed in workmanlike manner, by experienced workmen, and in the manner recommended by the manufacturer of such materials. Sufficient time shall be allowed for each coat of paint to dry thoroughly before the following coat is applied.

3.06 CHLORINATION

A. The discharge piping shall be chlorinated in accordance with AWWA C651 and applicable provisions of Section 02514 - Disinfection of Waterlines.

3.07 TESTING FOR COLIFORM ORGANISMS

A. After at least 500,000 gallons of water has been pumped from the well after all discharge piping has been assembled, and after any chlorination, samples of water shall be collected in sterile containers on at least three successive days and a test made of each sample for coliform organisms. The samples shall be taken by and the tests made by a laboratory approved by the City, and the City shall be furnished copies of the reports.

B. At least three successive daily samples shall be free of coliform organisms or the Contractor shall resterilize the well, pump and piping and retest until this provision is met, or until such time as the City becomes convinced that coliform organisms are not present in the water as a result of the construction and operations of the Contractor.

END OF SECTION

Section 02730

POROUS FLEXIBLE PAVING

PART 1 GENERAL

1.01 SECTION INCLUDES

A. Providing and installing sub-base material as shown on drawings or per recommended sub-base alternatives as provided from additional manufacturer's information.

B Providing all permeable paver products and installation per the manufacturer's instructions provided on this specification sheet and other available specification material.

C. Providing and installing specified fill material for gravel fill options and providing and installing specified fill material for grass fill options.

1.02 UNIT PRICES

A. Unit Prices.

1. Payment for porous flexible paving is on a square yard basis.

2. Refer to Section 01270 - Measurement and Payment.

B. Stipulated Price (Lump Sum). If the Contract is a Stipulated Price Contract, payment for work in this Section is included in the total Stipulated Price.

1.03 SUBMITTALS

A. Submittals shall conform to requirements of Section 01330 - Submittal Procedures.

1.04 QUALITY CONTROL

A. Submit a Manufacturer-signed certificate stating the product is MADE IN THE USA.

1.05 DELIVERY, STORAGE AND HANDLING

A. Protect TrueGrid Permeable Paver units from damage during delivery and unloading.

06 PROJECT CONDITIONS

A. Review installation and coordinate TrueGrid Permeable Paver work with other work affected.

B. All hard surface paving adjacent to TrueGrid Permeable Paver areas, including concrete walks and asphalt paving should be completed prior to installation of TrueGrid Permeable Pavers.

C. For TrueGrid's grass fill application, install turf when ambient air temperatures is at least 55 degrees.

D. In cold weather, do not use on frozen materials or materials mixed or coated with ice or frost, and do not build on a frozen base or wet, saturated or muddy subgrade.

E. Protect partially completed paving against damage from other construction traffic when work is in progress.

1.07 WARRANTY

A. Permeable Paver manufacturer shall warrant that all products furnished will be free from defects in material and/or workmanship for a period of five years following the date of shipment.

B. Providing a written claim is presented within the warranty period and after inspection showing the materials have failed under the warranty, all defective materials shall be refurnished and reinstalled under the warranty at no charge to owner.

PART 2 P R O D U C T S

2.01 MANUFACTURER

A. Manufacturer shall be Acceptable Manufacturer: TrueGrid Pavers, 2500 Summer St. Studio 3225, Houston, TX 77007, Phone: 1-855-355-GRID. Email: nwood@truegridpaver.com Website: www.truegridpaver.com.

2.02 MATERIALS

A. Base Course: Use locally sourced clean angular crushed limestone for base material.

1. Rock should be 1/2" inch to 3/4" inch diameter.

2. Sources of the material may include "pit run" or "crusher run". Crusher run material will typically require sand to be added (20 to 30 percent by volume)

for long term high porosity. Should local sources not be available an alternative mixture can be created by mixing 2/3 crushed stone with 1/3 sand as available.

3. Permeable geo grid or geo fabric shall be used for soil stabilization between sub grade and base material.

B. TrueGrid Permeable Pavers: Injection molded, highly durable, plastic grid structure with unique design components for high load capacity, high traffic applications. Produced from 100% Post Consumer Plastic. 1.8" cell height. Pre-assembled in 4' x 4' sheets for quick installation. Sheets can be reconfigured if needed.

C. Gravel Fill: Obtain clean, washed angular limestone to fill the 1.8" tall TrueGrid cells and spaces between. TrueGrid can be filled to top of cells and exposed or overfilled to hide cells. Rock should be 3/8" inch to 1/2" inch diameter.

1. TrueGrid's design does not require anchors on level ground or slopes up to 15 degrees. TrueGrid is designed for slopes above 15 degrees. However, as a precaution, anchors/staking may need to be considered per each sloped install above 8 degrees.

PART 3 EXECUTION

3.01 LIMITED WARRANTY

A. Examine sub-grade and base course installed conditions. Do not start TrueGrid Permeable Paver installation until unsatisfactory conditions are corrected. Check for improperly compacted trenches, debris, and improper gradients.

B. Installation constitutes acceptance of existing conditions and responsibility for satisfactory performance. If existing conditions are found unsatisfactory, contact Quality Control Manager for resolution.

3.02 PREPARATION

A. Place base course material over prepared sub base to grades shown on plans or from TrueGrid's recommended depths per application type, in lifts not to exceed 6", compacting each lift separately to 95% Modified Proctor for non-open grade material. Open grade base material to be leveled and compact to settle and lock in angular stone. Leave minimum 1.8" for TrueGrid Permeable Paver unit for final elevation.

3.03 INSTALLATION OF TRUEGRID PERMEABLE PAVER

A. Install TrueGrid Permeable Paver units by placing cells face up. Sheets come preassembled in 4'x4' sheets and connect with friction fit interlocking connectors.

No tooling required to connect or disconnect TrueGrid units. Nine individual 16"x16" pieces can be disconnected from each 4'x4' sheet and reconfigured as needed. Units can be cut around curves and organic shapes on the job site with any electrical handsaw. Maintain 1" clearance to any pre-installed object or surface structure. Top of cells shall be between 0.25" to 0.5" below the surface of adjacent hard-surface pavements.

B. Rock or soil fill aggregate can be driven directly on pre-filled TrueGrid to be dumped and spread.

3.04 INSTALLATION OF GRAVEL FILL

A. Install Gravel into TrueGrid cavities by back dumping directly from dump truck or from buckets mounted to tractors. Hand shoveling fill gravel into the cells is also acceptable for smaller jobs. Direct exit the site by driving forward. While TrueGrid Permeable Pavers can handle high load capacities while empty, avoid sharp turns over unfilled rings.

The gravel fill can then be spread from the pile using steer loaders, power brooms, blades, flat bottomed shovels, and/or wide "asphalt rakes" to fill the cells. The gravel should then be compacted when the cells are at capacity by using a roller for larger areas or a vibrating plate for smaller areas. If fully covering TrueGrid cells, typical coverage is 0.25" - 0.5" above cells:

3.05 PROTECTION

A. Gravel fill: Avoid sharp turns or "jack knifes" in trailered vehicles when cells are empty. Damage due to buckling can occur.

3.06 FIELD QUALITY CONTROL

A. Any damaged sections of TrueGrid Permeable Pavers during install can be removed and replaced with no evidence of replacement apparent.

B. Remove all excess materials, debris, and equipment from site upon completion of install.

3.07 MAINTENANCE

A. Gravel Fill: If the install is one that is initially a cell covered install, raking gravel back over exposed cell tops may be necessary if over fill aggregate migrates.

END OF SECTION

Section 02821

CHAIN LINK FENCES AND GATES

PART 1 GENERAL

1.01 SECTION INCLUDES

A. Fence framework, fabric, and accessories.

B. Excavation for post bases, concrete foundation for posts and center drop for gates.

C. Manual gates and related hardware.

1.02 MEASUREMENT AND PAYMENT

A. Unit Prices.

1. Payment for fencing shall be on a linear foot basis for height noted.

2. Payment for gates shall be per unit.

3. Refer to Section 01270 - Measurement and Payment.

B. Stipulated Price (Lump Sum). If the Contract is a Stipulated Price Contract, payment for work in this Section is included in the total Stipulated Price.

1.03 REFERENCES

A. ANSI/ASTM A 123 - Zinc (Hot Dip Galvanized) Coatings on Iron and Steel Products.

B. ANSI/ASTM F 567 - Installation of Chain-Link Fence.

C. ASTM A 116 - Zinc-Coated (Galvanized) Steel Woven Wire Fence Fabric.

D. ASTM A 120 - Pipe, Steel, Black and Hot-Dipped Zinc Coated (Galvanized) Welded and Seamless, for Ordinary Uses.

E. ASTM A 153 - Zinc Coating (Hot-Dip) on Iron and Steel Hardware.

F. ASTM A 392 - Zinc-Coated Steel Chain-Link Fence Fabric.

G. ASTM A 428 - Weight of Coating on Aluminum-Coated Iron or Steel Articles.

H. ASTM C 94 - Ready-mixed Concrete.

I. ASTM F 573 - Residential Zinc-Coated Steel Chain Link Fence Fabric.

J. ASTM F 668 - Poly (Vinyl Chloride) (PVC) Coated Steel Chain Link Fence Fabric.

K. Chain Link Fence Manufacturers Institute (CLFMI) - Product Manual.

L. FS RR-F-191 - Fencing, Wire and Post Metal (and Gates, Chain Link Fence Fabric, and Accessories).

1.04 SYSTEM DESCRIPTION

A. Fence height shall be as indicated on Drawings or as noted to match height of existing fence.

B. Extension arms for barbed wire shall match existing.

C. Line post spacing shall not exceed 10 feet, or as shown on Drawings.

1.05 SUBMITTALS

A. Submit following Section 01330 - Submittal Procedures.

B. Shop Drawings: Indicate plan layout, spacing of components, post foundation dimensions, hardware anchorage, and schedule of components.

C. Product Data: Provide data on fabric, posts, accessories, fittings, and hardware that indicates items match or exceed the quality of existing items.

1.06 QUALIFICATIONS

A. Manufacturer: Company specializing in manufacturing the products specified in this Section with minimum 3 years experience.

1.07 FIELD MEASUREMENTS

A. Verify that field measurements are as indicated on shop drawings.

PART 2 PRODUCTS

2.01 GALVANIZED FENCING

A. Fence fabric shall be No. 9 steel wire, hot galvanized after weaving, to match or exceed existing fence fabric.

B. Framework shall be hot-dipped galvanized with a minimum coating of 2 ounces per square foot, or one ounce per square foot plus 30 micrograms per square inch of chromate conversion coating.

C. Line posts shall conform to ASTM A 570 Grade 45 steel or ASTM A 569, cold rolled steel.

D. End corner, angle, and pull posts shall conform to ASTM A 570 Grade 45 steel or ASTM A 569 for steel pipe.

E. Top rails shall be 1-5/8-inch outside diameter steel pipe, 2.27 pounds per foot. Top rails shall pass through openings provided for that purpose in post tops.

F. Fabric ties shall be hog rings, galvanized steel wire not less than 9 gauge with a zinc coating of not less than 1.2 ounces per square foot.

G. Bolts and nuts shall be in conformance with ASTM A 307 and shall be galvanized in accordance with AASHTO M 232.

H. Install horizontal braces fabricated of 1-5/8-inch, 2.27-pound copper bearing steel pipe at all corner, gate, and end posts.

I. Gates shall be either swing or slide. Swing gates shall be hinged to swing 90 degrees or 180 degrees from closed to open. Slide gates shall be roller type with no vertical obstructions. All gate leaves shall have intermediate members and diagonal stress rods as required for rigid construction and shall be free from sag or twist. All gates shall be fitted with vertical extension arms or shall have frame end number extended to carry barbed wire. Gate posts for gates shall be 4-inch, 9.1-pound pipe. Gate frames shall be made of 2-inch outside diameter, castings. Fabric shall be the same as for the fence. Gates shall have malleable iron ball and socket hinges, catches, and stops. Posts for single gates shall be the same as end posts.

J. The top of 6-foot chain link fencing shall be equipped with three strands barbed wire on 45-degree extension arms tilted outward from City property. The top of 8-foot chain link fencing does not require barbed wire.

PART 3 EXECUTION

3.01 INSTALLATION

A. Install chain link fence in accordance with the directions of the manufacturer and these Specifications.

B. Install fence posts at not more than 10-foot centers and at least 36 inches into the ground in a Class B concrete base. Allow concrete to cure for at least 7 days before erecting remainder of fence. Fasten fabric to line posts with wire ties spaced about 14 inches apart and to top rail spaced about 24 inches apart.

C. Use standard chain link fence stretching equipment to stretch the fabric before tying it to the rails and posts. Repeat the stretching and tying operations every 100 feet or less.

D. Erect gates so they swing or slide in the appropriate direction. Provide gate stops as required. Secure hardware, adjust, and leave in perfect working order. Adjust hinges and diagonal bracing so gates will hang level. Adjust rollers and guides of sliding gates so gates are level.

E. At small natural or drainage ditches where it is not practical for fence to conform to contour of the ground, span the opening below the fence with wire fastened to stakes of required length. The finished fence shall be plumb, taut, true to line and ground contour. When directed, stake down the chain link fence at several points between posts.

F. Where new fence joins an existing fence, set a corner post and brace post at the junction and brace as directed. If the connection is made at other than the corner of the new fence the last span of the old fence shall contain a brace.

END OF SECTION

SUPPLEMENTARY SPECIFICATION

Section 02911 S

TOPSOIL

The following supplement modifies Specification Section 02911. Where a portion of the Specification is modified or deleted by this supplementary specification, the unaltered portions of the specification shall remain in effect.

1. Delete paragraph 1.01.A. and replace it with the following:

   1.01 SECTION INCLUDES

   A. Furnishing and placing topsoil in areas disturbed by construction within 60 feet of Forest Cove Well No. 5, not including areas for roads, aprons, discharge piping and foundations.

2. Delete paragraph 1.02. and replace it with the following:

   1.02 MEASUREMENT AND PAYMENT

   A. No separate payment will be made for topsoil. Include price in Item 2 in Document 00410 - Bid Form.

END OF SUPPLEMENT

Approved By:

Sonny Do, P.E.
Acting Assistant Director
Water Engineering Section
Engineering and Construction Division

12/24/15
Date

Section 02911

TOPSOIL

PART 1 GENERAL

1.01 SECTION INCLUDES

A. Furnishing and placing topsoil for finish grading and for seeding, sodding, and planting.

1.02 MEASUREMENT AND PAYMENT

A. Unit Prices.

1. No separate payment will be made for topsoil under this Section. Include payment in Section 02921 - Hydro-mulch Seeding or Section 02922 - Sodding.

2. Refer to Section 01270 - Measurement and Payment for unit price procedures.

B. Stipulated Price (Lump Sum). If Contract is Stipulated Price Contract, payment for work in this Section is included in total Stipulated Price.

PART 2 PRODUCTS

2.01 TOPSOIL

A. Topsoil shall be fertile, friable, natural sandy loam surface soil obtained from excavation or borrow operations having following characteristics:

1. pH value of between 5.5 and 6.5

2. Liquid limit: 50 or less

3. Plasticity index: 20 or less

4. Gradation: maximum of 10 percent passing No. 200 sieve

B. Topsoil shall be reasonably free of subsoil, clay lumps, weeds, non-soil materials, and other litter or contamination. Topsoil shall not contain roots, stumps, and stones larger than 2 inches.

C. Obtain topsoil from naturally well-drained areas where topsoil occurs at minimum depth of 4 inches and has similar characteristics to that found at placement site. Do not obtain topsoil from areas infected with growth of, or reproductive parts of nut grass or other noxious weeds.

PART 3 EXECUTION

3.01 EXAMINATION

A. Excavate topsoil for esplanades and areas to receive grass or landscaping from areas to be further excavated. Stockpile in area approved by Project Manager.

B. Stockpile topsoil to depth not exceeding 8 feet. Cover to protect from erosion.

3.02 TOPSOIL EXCAVATION

A. Conform to excavation and stockpiling requirements of Section 02315 - Roadway Excavation.

3.03 PLACEMENT

A. Place no topsoil until subgrade has been approved. For areas to be seeded or sodded, scarify or plow existing material to minimum depth of 4 inches, or as indicated on Drawings. Remove vegetation and foreign inorganic material. Place 4 inches of topsoil on loosened material and roll lightly with appropriate lawn roller to consolidate topsoil.

B. Increase depth of topsoil to 6 inches when placed over sand bedding and backfill materials specified in Section 02320 - Utility Backfill Material.

C. For areas to receive shrubs or trees, excavate existing material and place topsoil to depth and dimensions shown on Drawings.

D. Remove spilled topsoil from curbs, gutters, and, paved areas and dispose of excess topsoil in accordance with requirements of Section 01576 - Waste Material Disposal.

E. Place topsoil to promote good drainage and compact with light roller. Water topsoil after placement until saturated for minimum depth 6 inches, fill in and recompact areas of settlement.

3.04 PROTECTION

A. Protect topsoil from wind and water erosion until planting is completed.

END OF SECTION

Section 09971

PAINTING AND PROTECTIVE COATINGS FOR POTABLE WATER STORAGE TANKS

PART 1 GENERAL

1.01 SECTION INCLUDES

Surface preparation and application of paints and/or protective coating materials in a safe manner with proper handling and removal and disposal of all waste materials.

1.02 MEASUREMENT AND PAYMENT

There is no separate measurement and payment for work performed under this Specification Section. Include the cost for this work in the contract bid price for work of which this is a component part.

1.03 REFERENCE STANDARDS

A. American Society for Testing of Materials (ASTM)

1. ASTM D 4285, "Standard Test Method for Indicating Oil or Water in Compressed Air"

2. ASTM A 123, "Specification for Zinc (Hot-Dip) Galvanized Coatings on Iron and Steel Products"

3. ASTM A 153, "Specification for Zinc Coating (Hot-Dip) on Iron and Steel Hardware"

4. ASTM A 385, "Practice for Providing High-Quality Zinc Coatings (Hot-Dip)"

5. ASTM E 376-89, "Practice for Measuring Coating Thickness by Magnetic-Field or Eddy-Current (Electromagnetic) Test Methods"

6. ASTM D 4940-89. "Method for Conductimetric Analysis of Water Soluble Ionic Contamination of Blasting Abrasives"

7. ASTM D 4417-84, "Standard Test Methods for Field Measurement of Surface Profile of Blast Cleaned Steel"

B. NACE International "Book of Standards"

1. Field Measurement of Surface Profile of Abrasive Blast Cleaned Steel Surfaces Using Replica Tape: RP0287-91

2. Discontinuity (Holiday) Testing of Protective Coatings: RP0188-90

3. Visual Standard for Surfaces of New Steel Centrifugally Blast Cleaned with Steel Grit and Shot TM0175-75

C. NACE International Publication 6A192, "Dehumidification Equipment in Lining Application"

D. Society for Protective Coatings (SSPC), "Steel Structures Painting Manual, Vol. 1, Good Painting Practice"

E. Society for Protective Coatings (SSPC), "Steel Structures Painting Manual, Vol. 2, Systems and Specification"

1. Solvent Cleaning: SSPC-SP-1-82

2. Hand Tool Cleaning: SSPC-SP-2-95

3. Power Tool Cleaning: SSPC-SP-3-95

4. Power Tool Cleaning to Bare Metal: SSPC-SP-11-95

5. White Metal Blast Cleaning: SSPC-SP-5/NACE 1-94

6. Commercial Blast Cleaning: SSPC-SP-6/NACE 3-94

7. Brush-Off Blast Cleaning: SSPC-SP-7/NACE 4-94

8. Near-White Blast Cleaning: SSPC-SP-10/NACE 2-94

9. Mineral and Slag Abrasives: SSPC-AB 1-91

10. Visual Standard for Abrasive Blast Cleaned Steel: SSPC-Guide to Vis 1-89

11. Measurement of Dry Paint Thickness with Magnetic Gages: SSPC-PA 2

F. NSF International Standard 61 - Drinking Water System Components.

G. If there is a conflict between cited reference standards and this specification, this specification prevails unless otherwise indicated in the procurement documents.

1.04 SUBMITTALS

Submittals for materials and/or systems proposed for use on this project must conform to requirements included in Section 01330 and include, but not be limited to, those items listed for each product/system below. Provide submittals to the Engineer for review.

A. Paint and Protective Coatings:

1. Manufacturer Technical Data Sheets for all paints, coatings, solvents, detergents and degreasers proposed.

2. Manufacturer Material Safety Data Sheets (MSDS) for all paints, coating and thinners proposed.

3. Color name and/or number with color chart for each specific coating product. Exterior topcoat color shall be City of Houston Barr Blue.

4. Manufacturer's statement of conformance with ANSI/NSF 61 (NSF International) requirements for use on potable water tank interior surfaces.

5. Manufacturer's specific ventilation requirements for products used on interior surfaces. Provide ventilation requirements to ensure adequate evacuation of solvents to prevent solvent entrapment, worker exposure to solvents above the OSHAPEL, and timely coating system cure.

B. Abrasive Blast Products

Use abrasive blast products which conform to the Society for Protective Coatings (SSPC) Abrasive Specification No. 1. "Mineral and Slag Abrasives", except that copper slag is not permitted. Abrasive blast product submittals to include, but not be limited to, the following:

1. Manufacturer's certification or laboratory analysis that the product proposed contains less than 1% free crystalline silica.

2. Laboratory analysis of blast material presenting results of blast material testing as required in SSPC-AB 1, Table 1 requirements for Chemical and Physical Properties of Abrasives, except that the conductivity test for water soluble contaminants in accordance with ASTM D-4940 shall not exceed 500 microsiemens (micromhos).

3. Material Safety Data Sheets.

4. Composition, mesh size, and bulk density.

5. Recommended application nozzle, air requirements, and pressure.

C. Containment System

Include a sample or samples of containment materials including screens, tarpaulins, sheets, films and ground covers. Include manufacturer technical data sheets for the proposed containment system. In addition, include the following:

1. Outrigger/containment structural support system layout and details.
   a) For ground storage tanks, submit proposed arrangement of scaffolds and/or A-

frames to support containment materials. Do not support containment from existing tank handrails or ladders. The scaffolding must be designed to support the weight of the containment materials and provide a safe working environment for workers.

b) For elevated storage tanks, submit proposed layout of outrigger system, containment hoisting system, details of proposed method of connection to tank shell, list of structural members including, but not limited to, size of member, maximum allowable wind velocity before system must be lowered to prevent structural damage to the system and/or tank, method of determining wind velocity and proposed location of wind velocity measuring device. The outrigger system layout must be reviewed and sealed by a licensed Professional Engineer registered in the State of Texas.

2. Manufacturer's technical data sheets for the proposed containment system.

3. Manufacturer's certification that proposed containment materials are fire resistant.

4. Provide a minimum shade factor for proposed containment materials of 95%, except a minimum shade factor of containment materials used with chemical stripping agents of 85%. 6

D. Chemical Stripping Agents - For Rehabilitation of an Existing Tank

1. Manufacturer's Technical Data Sheet for the materials proposed.

2. Material Safety Data Sheets (MSDS).

3. Proposed method of application.

4. Waste material containment and retrieval system.

E. Dehumidification Equipment

1. Manufacturer and Supplier

2. Support Equipment (i.e. generator)

3. Equipment capacity, sized per NACE Publication 6A192

PART 2 PRODUCTS

2.01 COATINGS

A. Painting and Coatings

1. The following paint/coating manufacturers are known to have products of acceptable quality for this project: ACRO, Raven Lining Systems, Carboline, Sherwin - Williams, Tnemec, Valspar and Devoe (for exterior wash only). Bid based upon the use of products supplied by one of these named manufacturers. These named manufacturersare designated to establish a level of acceptable product quality or manufacturing experience and are not to be construed as the only manufactures of products acceptable for use on this project. Other manufacturers and products will be considered on an individual basis, and may be submitted for consideration in accordance with Document 00700, Article 3.10, Product Options and Substitutions (excluding 3.10.3), Section 01330, and this Section.

2. Specific products of the named manufacturers acceptable for use and to be bid for this project are contained in Table 1, "Coating Product," included in this section.

3. Use non-lead containing coatings which comply with all laws, regulations and ordinances of the Federal, State, and Local government including V.O.C. regulations.

4. Properly store and handle materials according to manufacturer's requirements and in compliance with applicable government regulations.

5. Color: Generally colors are to be as follows:
   a. When multiple coats are required, use coatings alternating colors.
   b. Use white for the interior final coat.
   c. Use City of Houston Barr Blue for exterior final coat.

6. Obtain all coating materials and required thinners for each tank from the same single source coating manufacturer.

7. The schedule for painting and coating for specific tanks is contained in Table 2 "Surface Preparation and Finish Schedule" included in this Section.

B. Hot Dip Galvanized Surfaces

1. If specified, hot dip galvanize in accordance with ASTM A 123, ASTM A 385 and/or ASTM A 153.

2. The completed galvanized sections to have a minimum of 2 ounces per square foot. Two ounces of galvanizing per square foot equals approximately 3.4 mils.

3. Estimate weight of galvanizing by use of magnetic dry film thickness gage in accordance with ASTM E 376-89.

4. Galvanizing (zinc) in contact with potable water must be NSF classified for contact with potable water.

2.02 EPOXY CAULKING

A. Use flexible, NSF classified epoxy caulking for use in contact with potable water and compatible with the epoxy lining system used in the tank.

B. Caulk to be 100% solids, two component, polyamine or polyamide cured.

C. The coating manufacturer and caulk material manufacturer to confirm, in writing, that the internal epoxy coating system is compatible with the 100% solids epoxy caulk material.

D. Include in the written confirmation of material compatibility, any conditions for or surface preparation requirements of the epoxy caulk material.

E. An acceptable product for this Project is "Aquatapoxy A7", manufactured by Raven Lining Systems, Tulsa, Oklahoma.

2.03 CHEMICAL PAINT STRIPPER (For Rehabilitation of an Existing Tank)

A. Use of chemical paint stripper for removal of exterior paint is allowed, if approved by the Engineer and used in strict accordance with manufacturer's recommendations.

B. Propose a chemical stripping system such as "Peel Away", manufactured by Dumond Chemicals, Inc. of New York, NY, or approved equivalent.

2.04 CONTAINMENT SYSTEM

A. Provide a containment system which allows for the containment of the environmentally sensitive waste, dust and paint over spray that will be generated during the blasting and painting operations.

B. When a tank is to be rehabilitated and the coatings to be removed contain lead, containment to conform at a minimum to the requirements of TNRCC Texas Air Control Board Regulation I, 3 TAC Chapter 111 Sections 131 through 139 and meet the performance requirements of Section 01351 "Environmental Safety and Worker Protection" of this specification.

C. When chemical stripping agents are used, provide for containment of debris, aerosols, strippings and other emissions or releases. In addition, manage contained waste in accordance with Section 02136 "Waste Material Handling and Disposal" and Contractor waste handling procedure.

D. Determine by the Engineer, the containment system requirements, if any, for wet abrasive blast or vacuum abrasive blast, and roller applied or brush-on coatings. Use impervious ground coverage as noted in Item 2.05.F.6 at all times.

E. Containment system proposed by the Contractor must assure the protection of the surrounding environment and must provide sufficient protection to meet: TNRCC Texas Air Control Board regulations for the Control of Air Pollution and Visible Emissions of Particulate Matter; Texas Water Commission regulations applicable to protection of the soil and water; and Sections 01351

"Environmental Safety and Worker Protection" and 02136 "Waste Material Handling and Disposal" of this Specification.

F. Construct containment system with wind screens of a minimal shade factor as specified in Item 1.07.C of this section, or as required below, with no emission from edges, rips, or tears. The containment system must be designed for the purpose of containing and controlling emissions, debris and protecting the air, ground and soil from contaminants resulting from lead paint removal, surface preparation and painting operations.

1. Containment System to provide a safe working environment and provide for control of emissions as required in Section 01351 "Environmental Safety and Worker Protection" of this Specification.

2. For rehabilitating an existing tank, employ a Containment System meeting the requirements of an SSPC Class 2 containment, per SSPC Guide 6 (CON), when lead containing paint is to be removed by abrasive blast cleaning methods.

3. The containment materials must provide for performance which will comply with the following:
   a) Protection of the environment, including air, water and soil, from abrasive blast media, process water, dust particles and paint debris.
   b) Air movement within containment.
   c) Secure edges and seams.
   d) Permeable to natural lighting, unless alternate lighting is to be provided.
   e) Tarp overlap to provide for maximum containment of spent debris.

4. Maintain the containment system free of defects through the course of the project. In the event that emissions or releases occur which exceed the requirements established in Section 01351, "Environmental Safety and Worker Protection," stop work until all defects are repaired.

5. Prior to installation, the containment system design must be submitted and reviewed by the Engineer. In addition, for work on elevated water storage tanks, design the containment enclosure to be raised and lowered within 15 minutes to prevent damage to the enclosure, the tank, personnel, and excessive loading to the tank and tank appurtenances in the event of high winds and foul weather.

6. Place membranes that are impervious to the abrasive blast media, paint debris dusts, and process water on the ground around the tank to prevent contamination of the ground storm waters and surface waters due to run-off. Use chemically resistant membranes when chemical stripping is employed. Contain the debris within 30 feet of the base of the tank.

7. Prior to any changes or modifications in the containment system during the course of the work, submit in writing and review by the Engineer, proposed changes and modifications. Address the operational and technical reasons for containment modifications in the submittal.

G. Eagle Industries, Reef Industries, or equivalent are acceptable suppliers.

2.05 ABRASIVE BLAST MATERIALS

Mineral and slag abrasive materials are to conform to the requirements of the Society for Protective Coating's Abrasive Specification No. 1, SSPC-AB1. Abrasives are to be Class A, less than 1% crystalline silica. The conductivity of the abrasive (indicative of water soluble contaminants) is not to exceed 500 microsiemen (micromhos) when tested in accordance with ASTM-D4940. Prior to use, provide the Engineer qualifications and conformance testing performed and documented in accordance with Section 5 of SSPC-AB1. Abrasive materials expressly prohibited from use include sand and copper slag.

2.06 PRODUCT HANDLING

Delivery and Storage

A. Deliver all paints, coatings and related materials to the job site or fabrication shop in original unopened containers with the product name, type and batch number, color, and manufacture date clearly marked on each container.

B. Store all materials used on the job in a single place provided by the Contractor or designated by the Engineer at the job site. Comply with OSHA requirements, recommendations of the National Fire Protection Association, City Fire Codes, and manufacturer recommendations for on site and fabrication shop storage.

C. Remove oily or solvent-soaked rags and all waste from the job site every night, and take all necessary precautions to reduce fire hazards to a minimum.

D. If the storage space was a fixed part of the project, leave clean upon completion of the work. Repair any damage to storage space or its surroundings.

PART 3 EXECUTION

3.01 COATING OPERATION ENVIRONMENTAL REQUIREMENTS

A. Tank Interior Humidity and Temperature

1. During abrasive blast cleaning and painting operations, the relative humidity of the interior air is not to exceed fifty percent (50%). Measure relative humidity by a sling psychrometer or other appropriate psychometric measuring equipment.

2. Maintain the interior air temperature and surface temperature of surfaces to be coated between 50°F and 120°F and at least 5°F above the dew point or as otherwise required by the manufacturer. (Note, that for use of Aquatapoxy, the maximum surface temperature is 100°F.)

3. Achieve the required conditions for interior air conditions through the use of dehumidification equipment.

   a. Submit for review by the Engineer, proposed dehumidification equipment. Provide a minimum of three air changes per hour unless dehumidification equipment manufacturer's calculations substantiate fewer air changes.

   b. Supply dry, fresh (not recirculated) air within 12 inches of the tank bottom from a system of duct work and blowers with the dehumidification equipment. Operate the ventilation system 24 hrs/day throughout the entire coating cure process.

   c. Maintain dehumidification until abrasive cleaning operations, coating operations and cure are complete, but not less than ten (10) days.

B. Tank Exterior Humidity and Temperature

1. Do not apply a coating to wet or damp surfaces or in rain, snow, fog or mist.

2. Do not apply any coatings when it is expected that the ambient air temperature will fall below 50°F or within 5°F of the dew point within 6 hours after application of coatings or paints.

3. Do not apply a coating when the relative humidity is above 85%, or as specified in the coating manufacturer's product data sheet. Measure relative humidity and dew point by use of a Sling Psychrometer in conjunction with US. Department of Commerce Weather Bureau Psychometric Tables. If the above conditions are exceeded, delay coating or painting operations until conditions are favorable.

4. The ambient conditions and surface temperature of the surfaces being coated must be between 50°F and 120°F and at least 5°F above the dew point in accordance with the manufacturer's recommendations. The maximum surface temperature during application of urethane coatings is 100°F.

3.02 WORKMANSHIP

A. Good workmanship is required for all work as defined by the latest edition of the "Manual of Good Painting Practices" published by the Society for Protective Coatings (SSPC), 40 24th Street, Pittsburgh, Pennsylvania 15222.

B. These specifications do not cancel or supersede the directions of the manufacturer regarding the warranty or applicability of the product. In instances of variations between manufacturer's

recommendations and this specification, the more stringent requirement governs.

C. The Contractor to furnish trained personnel experienced in the work to be performed. Contractor to ensure work is performed in accordance with these specification requirements including, but not limited to: surface cleanliness; anchor profile; ambient conditions; film thickness (wet and dry) and holiday detection. Provide and use such inspection instruments, gauges or other equipment as may be required to verify compliance with manufacturer's instructions and these specifications. Assure proper operating condition and calibration of equipment and instrumentation before and after use.

D. Provide tools and equipment in good working order including moisture traps in air lines to pressure pot and spray gun when air atomization is used. Set moisture trap for continuous bleed during spraying operation. Place moisture traps as close to spray gun as practical. Process air to be free from oil and moisture when tested in accordance with ASTM D 4285.

E. Do not apply primer closer than four inches (4") to any surface scheduled for subsequent blasting or to be field welded.

F. Apply a brush stripe coat of primer, subsequent to surface preparation, but prior to full primer coat application to welds, rivets, corners, crevices, and other default to coat surfaces.

G. Apply all caulk and/or sealant materials smooth and continuous.

3.03 SURFACE PREPARATION

A. Remove visible deposits of oil or grease prior to surface preparation in accordance with SSPC-SP-1 or other methods approved by the Engineer, remove visible deposits of oil or grease.

B. Prior to abrasive blast cleaning, remove all surface imperfections such as sharp fins, sharp edges, weld spatter, or burning slag. Grind sharp corners and edges to a smooth round edge with a radius of not less than 1/16 inch.

C. Abrasive blast cleaned surfaces to meet the requirements of this specification when examined in accordance with Society for Protective Coatings "Guide to SSPC-VIS 1-89". This applies to all exposed surfaces, including difficult to access areas (e.g. behind stiffener rings). When a tank is to be rehabilitated and the coatings to be removed contain lead, acceptable coating removal methods include wet abrasive blast cleaning, water jetting with or without abrasives, vacuum abrasive blast cleaning, and chemical stripping. Certain coating removal methods require subsequent dry abrasive blasting to achieve the specified surface preparation. Should these methods be selected, ensure that no fugitive dust escapes the containment system during dry abrasive blasting. This is to be accomplished by the use of negative air and/or dust collection systems adequately sized to effectively control dust.

D. For rehabilitation of an existing tank, Moderately Pitted Surface is defined as a surface having pits less than 1/16 inch deep with a frequency of 4 to 5 pits per square foot. Prior to application of the

specified coating system, blast the pitted surface to SSPC-SP10. The first coat may be thinned (not to exceed manufacturer's published recommendations) and applied by stiff bristle brush or roller to all pitted surfaces.

E. For rehabilitation of an existing tank, Badly Pitted Surface is defined as a surface having pits greater than 1/16 inch deep and less than 1/2 of the metal thickness with a frequency of 8-12 pits per square foot. Prior to application of the specified coating system, blast the pitted surface to SSPC-SP10. Prior to applying the specified system, fill the pits with an epoxy caulk seam sealer applied by putty knife or stiff bristle brush.

F. Prior to painting, remove dust by vacuuming from all prepared interior surfaces to be coated.

G. Subsequent to achieving the specified surface preparation and prior to coating application, interior wetted surfaces must be free from surface contaminants, visible and non-visible, to a level of less than $7\mu g/cm^2$ as sodium chloride. Surfaces will be tested by the City's laboratory for evidence of surface contaminants including soluble iron and salts such as chlorides. A minimum of one test for every 2500 square feet of shell and floor area will be performed. Ensure tank interior is dust free at the time of the test and that the surfaces to be tested are clean.

H. Prepared exterior surfaces may be vacuumed or cleaned by an alternative method acceptable to the Engineer. (For rehabilitation of an existing tank, note that use of compressed air during lead paint removal operations is only allowable under full containment.)

I. Prepared and approved surfaces must be coated before contamination, including rust bloom. Surfaces shown to be contaminated or exhibiting rust are to be recleaned to the requirements of the specifications at Contractor's expense.

J. Repair abraded or otherwise damaged areas of existing paint using comparable materials and procedures, as approved by the Engineer.

K. Treat areas of visible mildew with an approved mildewcide, compatible with the coating system to be applied.

3.04 CHEMICAL STRIPPER (For Rehabilitation of an Existing Tank)

A. After application of chemical stripper and prior to recoating of the exterior surface of the tank, evaluate the anchor profile and surface cleanliness. If the surface cleanliness and anchor profile meet specification requirements, recoating of the tank can be performed. If surface cleanliness and/or anchor profile do not meet the requirements of this specification, prepare the surface in the manner specified to obtain the required anchor profile and freedom from surface contaminants.

B. For caustic based strippers, use pH paper to check the tank surface after removal of the chemical stripper and existing coating system. Failure to properly clean and neutralize the surface can result in an alkaline residue remaining on the tank surface. If the surface pH is not neutral (pH of 7.0 to 7.5), flush the surface with potable water or approved neutralizing agent until a neutral surface pH is achieved.

C. Notify the Engineer a minimum of 48 hours in advance of the initiation of the chemical stripper removal process in order for the Engineer to be present. The manufacturer's representative is required to be on site during the initial removal process.

D. Install tarpaulins or similar containment materials on the ground surface immediately under and adjacent to the area of the tank where the coating system is to be removed as described in Contractor's submittals and acceptable to the Engineer. Install the tarps in a watertight manner so as to completely contain all materials and liquids from chemical stripper application, removal, neutralization and rinsing of the tank surface. Consider all resulting waste hazardous and handle as such. Extend the watertight tarps a minimum of twenty feet beyond the outer perimeter of the tank.

E. Apply chemical strippers to the tank surface in accordance with the manufacturer's recommendations for coverage, contact time, removal and surface cleaning.

F. For caustic based strippers, unless an inhibitor is recommended by the chemical stripper manufacturer and acceptable to the coating manufacturer, wash the surface after neutralization.

3.05 COATING APPLICATION

A. Apply coating to the standards represented in the SSPC Painting Manual, Volume 1, "Good Painting Practices" and manufacturer's recommendations for paint application procedures.

B. Use coating application equipment consistent with the coating manufacturer's recommendations. Supply air free from oil and moisture when tested in accordance with ASTM D 4285.

C. All mixing and thinning of coatings to be in accordance with manufacturer's recommendations.

D. Only compatible solvents recommended by the coating manufacturer will be used for thinning and clean up.

E. Strictly adhere to the re-coat intervals recommended and supplied by the coating manufacturer.

F. Do not coat any cleaned surface if "rust bloom" or recontamination has occurred. The Engineer to approve cleaned surfaces prior to application of coating.

G. The Engineer spot checks surfaces to ensure conformance. At Contractor's expense, re-prepare surfaces not found to meet specifications.

H. All painted surfaces to be free from all dust, dirt and contamination before succeeding coats are applied. The Engineer to approve each coat of paint before succeeding coats are applied.

I. All environmental (ambient) conditions to satisfy manufacturer's recommendations before coatings are applied.

J. All coats to be free of runs, drips, sags and holidays or other discontinuities. The finish is to be uniform.

K. Dry film thicknesses of all coats to conform to minimum and/or maximum thicknesses required by these specifications. Measure all dry film thicknesses in strict accordance with SSPC-PA2.

L. Interior – Prior to application of primer and prior to application of intermediate coat, brush stripe coat all welds, rivets, corners, edges, crevices and uniformly pitted surfaces. Brush stripe coat rough pits, depressions, and crevices to work in coatings. Do not thin stripe coats in excess of that recommended by the manufacturer.

For rehabilitation of an existing tank:

1. Fill weld "deep pits" and grind flush at the direction of the Engineer. Payment to be at the unit price bid for "Extra 6-inch Diameter Floor Patches".

2. Moderately and badly pitted surfaces may exceed specified limits on the anchor profile. The primer coat dry film thickness must be sufficient to adequately cover the anchor profile.

M. Exterior - All welds, rivets, corners, edges and irregular surfaces are to be stripe coated as part of the first coat application. Brush stripe coat pits, depressions and crevices to work in coating. Apply coating by brush or roller, using manufacturers' recommended thinner (if applicable) for the application method selected. NO SPRAY PAINTING ON EXTERIOR SURFACES AT TANK SITES WILL BE PERMITTED WITHOUT THE USE OF CONTAINMENT SCREENS AND APPROVAL OF ENGINEER.

N. When more than one coat is to be applied, each coat should have a distinguishable color from the preceding and following coats. Note that stripe coating is considered to be part of the first coat application.

O. Exterior surface preparation and priming of all metal tank appurtenances to be in accordance with this specification. Intermediate and finish coatings to be the same as those of adjacent surfaces.

P. Pipe and Fittings

1. For elevated tanks, prepare the external surface of new and existing piping and fittings within the "dry" tank pedestal with the same surface preparation and coating system as the interior of the tank pedestal.

2. Prepare new above ground piping and fittings with the same surface preparation and coating system as specified for tank exterior.

3. Prepare existing above ground piping and fittings connected directly to the tank with the same surface preparation and coating system as specified for tank exterior. Limit this to

exposed portions of piping at inlets/outlets and to the nozzle of the adjacent tank on interconnect lines. Additional limits of yard piping are indicated on the plans.

Q. Prepare and coat inaccessible interior surface of roof plate and rafters as follows:

1. For new tank construction, prepare inaccessible surfaces, such as interior surface of roof plate and rafters, with specified surface preparation. Prime coat prior to erection. Apply a minimum of two additional full coats prior to final placement. Surface preparation and prime coat application may be conducted off-site. Follow inspection of shop blasting and painting in accordance with this specification. Follow the recoat intervals recommended by the manufacturer.

2. For repair of existing tanks, prepare all inaccessible interior surfaces of roof plate and rafters to be installed with specified surface preparation and a minimum of two full coats prior to final placement.

R. Jack the roof plate/rafter interfaces, which are not accessible for surface preparation and coating work, off the rafters to facilitate blasting and coating the tops of rafters and the roof plate. Move wedges used to hold the roof plate off the rafters as required so that all areas between the rafters and roof plate are blasted and coated.

S. For wet surfaces, including immersion and condensation zones, maintain a constant positive flow of dehumidified air, with adequate circulation across the finish coat for a period of ten (10) days, minimum. Evacuate solvent from the bottom of the tank. Forced or induced airflow may be required. Any accelerated curing procedure must be recommended in writing by the manufacturer and approved by the Engineer.

T. Repair damaged areas in galvanized coating as follows:

1. Interior surfaces require a NSF approved cold galvanizing component.

2. Mechanical exterior damage to be prepared by hand tool (SP-2) or power tool (SP-3) spot cleaning and to be spot coated with an organic zinc coating approved by the Engineer.

3. Prepare damaged areas exhibiting red rust to bare metal (SP-11) and coat with an inorganic zinc coating approved by the Engineer.

U. Coatings work will be permitted during daylight hours only unless arrangements or permission has been granted in writing.

3.06 PROTECTION OF SURFACES

A. Unless otherwise specified, painting will not be required on the following items:

1. Exposed surfaces of Aluminum

2. Polished or finished Stainless Steel

3. Nickel, Monel, Copper, Bronze, Lead or Brass

4. Rubber and plastic including Fiberglass Reinforced Plastics

5. Chromium plated surfaces

B. If Contractor applies paint to or causes damage to surfaces to be protected or unspecified surfaces, removal of coating, repair or replacement of item is required.

C. Protect all surfaces, which are not to be painted, from overblasting, spraying, over spray, spatters, or spillage of paint.

3.07 PAINT SYSTEM IDENTIFICATION

A. Tank Label:

Stencil (or use ready-to-apply decals) the information below to the side of the tank near the flush clean-out door for GST and the access door for EST about 3 feet from the ground after completion of the painting operation. Letters are to be 0.75 inches in height, the color is to be black and material is to be compatible with finish coat:

1. Date of coating application. Completion [month/year]

2. General Contractor, Painting Contractor

3. Interior coating system supplier and product number(s). Surface Preparation, Prime Coat, Intermediate Coat, Finish Coat, Caulking

4. Exterior coating system supplier and product number(s). Surface Preparation, Prime Coat, Intermediate Coat, Finish Coat

3.08 INSPECTION, TESTING, RECORD KEEPING

A. Schedule and coordinate work with the Engineer to allow for expeditious inspection by the City or designated representative, including the use of ladders, scaffolds, lighting and swingstages to provide regular access for inspections.

B. All surfaces ready to receive a coating must be approved by the Engineer before the application of the next succeeding specified coat. If the Contractor proceeds without such approval, he may, at the direction of the Engineer, be required to remove and/or recoat all such work at no additional cost to the City.

C. Measure wet film thickness at least once every thirty (30) minutes to make certain that proper

film thickness is being achieved. More frequent checks may be required by the Engineer at his direction.

D. Test all tank interior coated surfaces under the direction of the Engineer for nicks, scrapes and/or pinholes in the coating film using a low voltage, wet sponge holiday detector for thin film coating (<20 mils) and high voltage holiday detector for thick film coating (>20 mils). Perform holiday detection in accordance with NACE RP0188-90: "Discontinuity (Holiday) Testing of Protective Coatings." Correct any deficiencies to the satisfaction of the Engineer.

E. Record temperature, humidity, and dew point on a log including date and time reading obtained. Obtain a minimum of three such readings on days of coating application. The format for these records is presented in Table 3, "Daily Coating Summary Report" included in this Section. Enter the records into a Windows compatible file such as Quatro Pro or Excel and submit a hard copy with monthly pay requests for those months when coatings are applied. Furnish the Engineer with a 3-1/2" disk containing the complete coating summary report for the project at the end of the project, or in the interim, if requested.

F. Paint films showing sags, checks, blisters, teardrops, curtains, fish eyes, or fat edges will not be accepted. Entirely remove films exhibiting any of these defects and recoat the surface at no additional cost to the City.

G. Inspect blasted steel surfaces by the Engineer using SSPC-Vis 1-89, "Visual Standard for Abrasive Blast Cleaned Steel", or NACE TM-0175-75 for new steel.

H. Demonstrate surface profile conformance to the specifications by obtaining average results of a minimum of ten (10) equally spaced anchor profile determinations per 1000 square feet. Employ at the discretion of the Engineer, ASTM D 4417 "Standard Test Methods for Field Measurement of Surface Profile of Blast Cleaned Steel" Method A, B or C. ASTM D 4417 Method C shall be employed to resolve any dispute. The average reading to be between 2.0 mils and 3.0 mils. Any individual profile point less than 1.5 mils or greater than 4.0 mils will be cause for rejection of the anchor profile. Rejected areas are to be reblasted to correct profile.

3.09 FINISH SCHEDULE

A. A list of the tanks to be coated is presented in Table 2, "Surface Preparation and Finish Schedule" at the end of this section. Table 2 contains the required pre-cleaning procedures, the degree of surface preparation and coating system schedule for the interior and exterior of the various tanks.

B. Utilize the following legend for TABLE 2 "Surface Preparation and Finish Schedule":

1. Prior to abrasive blasting, degrease oily residue using steam cleaner and/or water blaster. Check with black light and reclean if necessary. Check the pH of the surface for neutrality if an emulsifying type degreaser is used.

2. Prior to abrasive blasting, perform Solvent Cleaning (SSPC-SP-1-82) to remove oil, grease and other detrimental foreign contaminants for interior and/or exterior surfaces.

3. Power Tool Clean (SSPC-SP-3-82) any new welds, flame cut surfaces, buckshot and/or weld splatter associated with tank repairs, modifications and other new work.

4. Perform Near White Blast Cleaning (SSPC-SP10 - NACE No. 2) of all interior tank surfaces unless otherwise noted in the Finish Schedule. Achieve an AVERAGE of 2.0 mils to 3.0 mils with no individual reading greater than 4.0 mils or less than 1.5 mils for anchor profile on abrasive blasted surfaces.

5. Perform Near White Blast Cleaning (SSPC-SP10 - NACE No. 2) to the exterior surfaces. Achieve an AVERAGE of 2.0 mils to 3.0 mils with no individual reading greater than 4.0 mils or less than 1.5 mils for anchor profile on abrasive blasted surfaces.

6. Perform Commercial Blast (SSPC-SP6 - NACE No. 3) on all exterior surfaces. Achieve an AVERAGE of 2.0 mils to 3.0 mils with no individual reading greater than 4.0 mils or less than 1.5 mils for anchor profile on abrasive blasted surfaces.

7. Perform Brush-Off Blast (SSPC-SP7 - NACE No. 4) on all exterior surfaces to remove poorly adhering coatings, mildew, dirt, soil and other detrimental foreign contaminants. Use of TSP or equal will improve cleaning effectiveness.

8. Spot Repair by hand sanding and/or power tool cleaning any pinholed coatings, damaged coatings and/or rust spots. All repair areas are to be feathered into adjacent painted areas using the appropriate paint system specified for the applicable interior or exterior of the tank.

9. Three (3) Coat Interior Polyamide Epoxy Paint System having ANSI/NSF 61 approval for potable water service. Each coat in alternating colors.
   a) The total coating system to have a nominal dry film thickness of 10 mils to 16 mils.
   b) Each primer and intermediate coats to have a nominal 3 to 5 mils DFT. Finish coat to have a nominal 4 to 6 mils DFT.
   c) All DFT measurements are to be performed in accordance with SSPC-PA2 and represent the DFT, corrected for magnetic base readings.

10. Two (2) Coat Interior Polyamide Epoxy Paint System having ANSI/NSF 61 approval for potable water service. Each coat a different color.
   a) The total coating system to have a nominal dry film thickness of 7 mils to 11 mils.
   b) Primer coat to have a nominal dry film thickness of 3 to 5 mils, and for the finish coat, 4 to 6 mils.
   c) All DFT measurements are to be performed in accordance with SSPC-PA2 and represent the DFT corrected for magnetic base readings.

11. Interior Epoxy Caulk Material to be EPA and FDA approved for potable water service such as Raven Lining Systems A-7. Apply caulk material to surfaces which have received

a Near White Metal Blast (SSPC SP-10 - NACE No. 2). Apply caulk in a smooth and continuous manner, overlapping material at least one inch on each side of seam to be caulked. Caulk to be at least 30 mils thick at centerline of seam. After material has cured but prior to application of any coating, lightly scarify the surface of the caulk material. Caulk material is not to be applied to continuous weld seams except as required to fill deep weld undercuts. The 1.0 inch overlap does not apply for deep pit repairs or undercuts.

12. Three (3) Coat Exterior Epoxy/Epoxy Urethane Paint System. Intermediate color to compliment topcoat color selected by the City.
    a) The total coating system to have a nominal dry film thickness of 9 to 12.5 mils.
    b) Primer coat to have a nominal dry film thickness (DFT) of 3 to 4.5 mils. Intermediate coat to have a nominal 4.5 to 6 mils DFT. Finish coat to have a nominal 1.5 to 2 mils DFT.
    c) All field coats to be brush or roller applied. SPRAY APPLICATION ON SITE REQUIRES APPROVAL OF CITY AND USE OF CONTAINMENT SCREENING.
    d) All DFT measurements are to be performed in accordance with SSPC-PA2 and represent the DFT adjusted for magnetic base readings of abrasive blast cleaned steel.

13. Two (2) Coat Exterior Epoxy /Urethane Paint System. Intermediate color to compliment topcoat color selected by the City.
    a) Total coating system to have a nominal dry film thickness of 6 to 8 mils.
    b) Primer coat to have a nominal 4.5 to 6 mils DFT. Finish coat to have a nominal 1.5 to 2 mils DFT.
    c) All field coats to be brush or roller applied. SPRAY APPLICATION ON SITE REQUIRES APPROVAL OF CITY AND USE OF CONTAINMENT SCREENING.
    d) All DFT measurements are to be performed in accordance with SSPC-PA2 and shall represent the DFT adjusted for magnetic base readings of abrasive blast cleaned steel.

14. Two (2) Coat Exterior Silicone Alkyd Paint System
    a) Prime all blasted and repaired areas with one coat of Alkyd Primer having a nominal DFT of 3 to 4.5 mils.
    b) Apply full Silicone Alkyd Finish Coat having a nominal DFT of 2.5 to 4 mils.
    c) Total coating system to have a nominal 5.5 to 8.5 mils DFT.
    d) All field coats to be brush or roller applied. SPRAY APPLICATION ON SITE REQUIRES APPROVAL OF CITY AND USE OF CONTAINMENT SCREENING.
    e) All DFT measurements are to be performed in accordance with SSPC-PA2 and represent the DFT adjusted for magnetic base readings for abrasive blast cleaned steel.

15. Interior 100% Solids, Plural Component Paint System having ANSI/NSF 61 approval for potable water service.

a) Total coating system to have a minimum nominal dry film thickness of 20 to 25 mils.
b) Apply coating in one or two coats, as recommended by the manufacturer.
c) All DFT measurements are to be performed in accordance with SSPC-PA2 and shall represent the DFT corrected for magnetic base readings.
d) Application to be in strict accordance with the manufacturer's published requirements.
e) The use of dehumidification may be waived by the City when this system is utilized. Maintain surface cleanliness to ensure no coatings are applied over contaminated, rust blooms or otherwise discolored surfaces as specified elsewhere in these documents. Use ventilation equipment as required by the manufacturer to maintain a safe working environment.

16. Non-Skid Walk-way
a) GST – Provide three-foot wide safety/skid resistant roof walkway. Coating to be compatible with specified external prime coat coating system and applied to a properly cleaned surface. Spread crushed walnut shells or aluminum oxide on intermediate coat while still tacky to achieve a coarse textured finish. After this coat has cured, sweep all loose shells or grit from surface and apply finish coat. Finish coat paint color to be a contrasting shade to the roof color. For galvanized tanks, do not blast but clean according to SP-1. Apply one coat of wash primer, then apply skid resistant material.
b) EST – Provide safety/skid resistant walkway, as above, inside the handrail area on the tank roof.

17. Concrete Surfaces
a) Prior to application of specified system, pressure wash all surfaces to remove all dirt, laitence efflorescence and other non-cementitious material.
b) Prepare concrete, masonry units, brick and plaster surfaces by removing efflorescence, chalk, dust, dirt, grease and oils and by roughening the surfaces as required to remove glaze. High pressure water, 4,000 psi minimum at 2.5 gallons/minute minimum, with or without abrasive injection, will be used to remove poorly adherent or "powdery" existing paint.
c) Determine the alkalinity and moisture content of the surfaces. Where the alkalinity exceeds the paint manufacturer's recommendations for application of the paint, correct the condition in accordance with the paint manufacturer's recommendations. Do not apply paint to surfaces while the surface moisture content exceeds the paint manufacturer's moisture content limitations

18. Continuous tank ventilation system must be able to prevent the vapor concentration from reaching the TLV (threshold limit values) of exposure to the solvent(s) used in accordance with the TLV values published by the American Conference of Governmental Industrial Hygienists, 1991-1992 edition.

19. Inspect galvanized sheets for white rust deposits prior to erection. Clean any white rusted areas by the use of a water and scrub brush technique. Measure the coating thickness in accordance with ASTM E 376-69. Any thickness less than 3.0 mils may be cause for rejection of the plate.

20. On ground storage tanks with aluminum domes, apply 20 mils of Ameron 487 elastomeric polyurethane coating, or equivalent, to the top of the wind girder, exterior shell of the tank under the aluminum flashing at the wind girder, and lap 6" over the top edge of the shell inside the tank.

21. Apply 20 mils DFT nominal/16 mils minimum Corrocote II PW, 100% solids as manufactured by Madison Chemical Industries. Surface preparation to be in accordance with Manufacturer's published instructions.

3.10 SCHEDULING

A. Perform painting work according to the contract construction schedule as required in Section 01330 - Submittal Procedures.

B. Scheduling not to supersede temperature, humidity or other environmental requirements for coatings application included in these specifications.

C. Coordinate work of other trades and provide conditions for neat, clean, dust-free work.

3.11 SITE CLEAN-UP

The Contractor to maintain the construction site in a neat and orderly manner throughout the duration of the project.

TABLE NO. 1
"COATING PRODUCTS"

Coating System	Coating Manufacturer	Primer Coat	Intermediate Coat	Finish Coat
Tank Interior				
3 Coat Polyamide/ Polyamine Epoxy	ACRO	4460	4460	4460
	CARBOLINE	891	891	891
	VALSPAR	32 SERIES	32 SERIES	32 SERIES
	TNEMEC	SERIES 20	SERIES 20	SERIES 20
	SHERWIN-WILLIAMS	TANK CLAD HS	TANK CLAD HS	TANK CLAD HS
2 Coat Polyamide Epoxy	ACRO	4460		4460
	CARBOLINE	891		891
	VALSPAR	32 SERIES		32 SERIES
	TNEMEC	SERIES 20		SERIES 20
	SHERWIN-WILLIAMS	TANK CLAD HS		TANK CLAD HS

2 Coat 100% Solids Plural Component	RAVEN			AQUATAPOXY A-6
Tank Exterior				
3 Coat Epoxy/ Epoxy Polyurethane	ACRO CARBOLINE VALSPAR TNEMEC SHERWIN-WILLIAMS	4422 893 32 SERIES SERIES 20 Recoatable Epoxy Primer	4460 890 or 893 32 SERIES SERIES 20 Macropoxy 646	4429 134 HS or 134 HG V40 SERIES SERIES 74 HI-SOLIDS Polyurethane
3 Coat Silicone Alkyd	ACRO CARBOLINE VALSPAR TNEMEC SHERWIN-WILLIAMS	1144 RUSTARMOR 29 U-13 F-28 SERIES 37H KEM BOND HS	2214V SUBSIL 30 HS 20-W-9 SERIES 2H STEELMASTER 9500	2215V SUBSIL 30 HS 21 SERIES SERIES 82 STEELMASTER 9500
2 Coat Silicone Alkyd	ACRO CARBOLINE VALSPAR TNEMEC SHERWIN-WILLIAMS	1104 RUSTARMOR 29 13-R-89 SERIES 37 H KEM BOND HS		2215V SUBSIL 30 HS V-20 SERIES SERIES 82 STEELMASTER 9500
Coating System	Coating Manufacturer	Primer Coat	Intermediate Coat	Finish Coat
Skid Resistant Epoxy/ Polyurethane	ACRO CARBOLINE VALSPAR TNEMEC SHERWIN-WILLIAMS	4422 890 32 SERIES SERIES 20 Recoatable Epoxy Primer	4460 890 32-SERIES SERIES 20 Macropoxy 646	4429 134 HS V-40 SERIES 74 HI-SOLIDS Polyurethane
Skid Resistant Silicone Alkyd	ACRO CARBOLINE VALSPAR TNEMEC SHERWIN-WILLIAMS	1104 RUSTARMOR 29 V-13 F-28 SERIES 37H KEM BOND HS	2214V RUSTARMOR 29 20-W-9 SERIES 2H STEELMASTER 9500	2215V SUBSIL 30 HS 21 SERIES SERIES 82 STEELMASTER 9500
Special Service				
Pitted Surfaces Internal	RAVEN LINING	AQUATAPOXY A-6		AQUATAPOXY A-6
	SHERWIN-WILLIAMS	Steel Seam Trowel Grade		
Concrete Surfaces				
Internal	ACRO CARBOLINE VALSPAR SHERWIN-WILLIAMS	4460 891 32 SERIES TANK CLAD HS	4460 891 32-SERIES TANK CLAD HS	4460 891 V-40 TANK CLAD HS

Exterior Above Grade	ACRO	4453	4460	4429
	CARBOLINE	3359	3359	3359
	VALSPAR	CRETE/GARD II	CRETE/GARD II	CRETE/GARD II
	SHERWIN-WILLIAMS	METALATEX	METALATEX	METALATEX
Interior Flexible Caulking	RAVEN LINING	AQUATAPOXY A-7		

TABLE NO. 2
SURFACE PREPARATION AND FINISH SCHEDULE

Tank	INTERIOR			EXTERIOR			
	Surface Preparation	Paint System	Additional Work Items	Surface Preparation	Paint System	Additional Work Items	Comments

Notes:

1. See Table 1 "Coatings Products" for allowable coating manufacturers and products.
2. See Paragraph 3.09 B. "Finish Schedule" for description of items listed in this table.

END OF SECTION

SECTION 13203

TANK CLEAN-UP AND DISINFECTION

PART 1 GENERAL

1.01 SECTION INCLUDES

Clean-up and disinfection of the rehabilitated storage tanks and/or new storage tanks complete with all required disinfecting and neutralizing chemicals, and all equipment, labor and superintendence.

1.02 MEASUREMENT AND PAYMENT

A. No separate measurement and payment for work performed under this Item.

B. The Contractor shall include the cost for this work in the contract bid price for work of which this is a component part.

1.03 REFERENCES

A. AWWA B 300 – Standard for Hypochlorites

B. AWWA C 651 – Standard for Disinfecting Water Mains

C. AWWA C 652 – Standard for Disinfection of Water Storage Facilities

1.04 SUBMITTALS

A. Prior to starting disinfection work, furnish to Engineer a detailed outline of proposed sequence of work, manners of filling and flushing units, source and quality of water to be used, and disposal of wastewater.

B. Submit material data sheets on all disinfectants and neutralization chemicals to be used.

1.05 QUALITY ASSURANCE

A. Bacteriological Sampling and Testing:

1. Bacteriological sampling and water quality testing of disinfected tank to be conducted by Water Quality Control Branch, Public Utility Division of the City of Houston Public Works Department.

2. Results to be acceptable to City of Houston.

3. Tank to be verified free of coliform bacteria contamination. Work to be in accordance with AWWA C652, Disinfection of Water Storage Facilities, as applicable.

4. Methods of bacteriological analysis are as specified in the Standard Methods for Examination of Water and Wastewater by the American Public Health Association, latest edition.

PART 2 PRODUCTS

2.01 DISINFECTANT

Disinfectant to be calcium hypochlorite meeting the requirements of the AWWA B300 "Standard for Hypochlorites".

2.02 WATER

A. Water for the first tank washdown, disinfection, fill and testing of piping to meet the TCEQ Standards for potable water will be provided by the City.

B. The Contractor may be required to pay for water required for refill or retesting due to failures in workmanship caused by the Contractor discovered during initial testing.

2.03 CHLORINE NEUTRALIZING CHEMICALS

Chlorine neutralizing chemicals (e.g. sulfur dioxide, sodium bisulfite, sodium sulfite, etc.), if required for residual reduction of heavily chlorinated water, are to be of grade and analysis approved by the City. Provide the City with standard operating procedures for neutralizing any chlorine prior to discharge. Contractor shall determine if a TPDES permit is required for discharge. If discharging to existing sewer, Contractor shall ensure that existing capacity is sufficient to prevent backup from occurring. Provide the Owner with standard operating procedures neutralizing any chlorine prior to discharge.

PART 3 EXECUTION

3.01 CLEAN-UP

A. Remove all construction equipment, scaffolding, planks, tools, rags, paint containers, erection lugs, brackets weld burrs, weld spatter, or other materials not part of the tank structure.

B. Clean tank of dirt, blast products, and debris by sweeping, scrubbing, vacuuming or equally effective measures.

C. Hose down tank interior (walls, roof and floor) with potable water to remove remaining foreign materials.

D. Collect and properly dispose of all accumulated rinse water and associated solids.

3.02 DISINFECTION

A. General:

All inside surfaces of the tank including roof, rafters and other structural members above the high water level but excluding the tank overflow piping are to be disinfected. Thoroughly rinse chlorinated water from roof and rafters prior to the filling of the tank.

B. Initial Disinfection Procedure:

1. Spray and/or brush interior of tank with chlorine solution of one pound of 65 percent calcium hypochlorite to 100 gallons of water.

2. Thoroughly coat all surfaces including inlet and outlet piping up to and including first block valve.

3. Surfaces to be disinfected to remain in contact with disinfectant solution for a minimum of 30 minutes.

4. After minimum contact time has elapsed, disinfected surfaces to be flushed by hosing down with potable water.

C. Secondary Disinfection Procedure:

1. Fill tank with water, furnished by Owner, to approximately eight feet above the tank floor.

2. Add 65% calcium hypochlorite in solution to obtain a 5 ppm residual in the eight feet of water in the tank as follows:

Use the following formula to calculate weight of 65% Calcium Hypochlorite to use to obtain 5ppm:

$$\frac{\text{(Total weight of water)} \times (5 \text{ ppm})}{(1{,}000{,}000) \times (.65)}$$

3. Fill the tank with water to top of overflow.

4. Let stand for a minimum of 24 hours or until the chlorine residual is less than or equal to 4 ppm.

5. Tests for leakage shall be made at this time.

6. In the event leaks occur, water shall be lowered to two feet below the point the leaks occur.

7. After repairs, the process shall be repeated.

D. Water Sampling:

1. Water samples are to be taken from the tank by the Owner for bacteriological and quality analyses.

2. The Contractor shall notify the Engineer when the tank is ready to be sampled.

3. All sampling to be done during normal business working hours.

E. Additional Testing Requirements:

1. Repeat disinfection procedure, if necessary, at Contractor's expense until acceptable water samples are obtained.

2. Contractor responsible for disposing of chlorinated water.

3. Responsibility to include the obtaining of any necessary permits and all required neutralizing chemicals.

4. After the bacteriological criteria have been satisfied, the water in the tank must have a chlorine residual of less than 2.0 ppm before the tank is placed in service.

5. A Partial Certificate of Substantial Completion will be issued for each tank. The Contractor shall complete all requirements for bacteriological testing, fill the tank for use by the City, restore tank site, and complete all other ancillary construction to obtain the Certificate of Substantial Completion. The Contractor shall complete all incorrect or incomplete items cited with each Partial Certificate of Substantial Completion within 30 days.

3.03 DISINFECTION OF PLANT PIPING

A. General:

1. Furnish pump, pipe connections and necessary apparatus, gauges and meters.
2. Furnish necessary labor, assistance and chlorination agent for disinfection.

B. Contamination Control:

1. Prevent admission of contaminated water to previously disinfected units.

2. If contaminated water is admitted to previously disinfected units, disinfect these units at no additional cost to Owner.

C. Disinfect:

In accordance with applicable sections of AWWA C651, Disinfecting Water Mains and as follows:

1. Chlorine dose, 50 mg/l minimum.

2. Retain chlorine water in system until completion of hydrostatic tests. Minimum retention period to be 24 hours.

3. Following chlorination, flush treated water from piping until replacement water has chlorine content not more than 0.1 mg/l in excess of residual in water from supply line, and in any event not more than 0.2 mg/l total.

4. If initial treatment results in an unsatisfactory bacterial test, repeat disinfection procedures at no additional cost to Owner until satisfactory results are obtained.

END OF SECTION

Section 15162

LINESHAFT DEEP WELL PUMPS

PART 1 GENERAL

1.01 SECTION INCLUDES

A. Requirements for furnishing, installing and testing a deep well lineshaft pump and constructing a concrete pump foundation at the sites indicated on Drawings. The complete installation include new lineshaft pump, steel discharge head, column pipe, tubing and shafting, air line, solution tubing and associated strainer and suction adapter to affect the complete operational water well pumping system.

1.02 UNIT PRICES

A. No separate payment will be made for Work as required by this Section. Price for pump equipment is included as Item 2 in Document 00410-Bid Form and adjusted as necessary with Items 23 and 24.

1.03 ORDERING OF PUMP AND MOTOR

A. The pump and motor shall not be ordered without written instructions or approval of the City. Written instructions or approval of the City shall occur after the satisfactory completion, as determined by the City, of the pumping test of a well. Once the City's instructions are received, the Contractor shall order the pump and motor as soon as practicable. No pump bowl assembly shall be assembled or released for shipment without the written approval of the City.

1.04 REFERENCE STANDARDS

A. The pumping unit shall conform to the latest edition of each of the following standards as applicable, unless otherwise specifically stated in this section. Pump shall comply with all local and state sanitary and safety regulations.

1. AWWA E103 – Horizontal and Vertical Line-Shaft Pumps.

2. The Hydraulic Institute – Centrifugal Pump Section.

1. 05 SUBMITTALS

A. Submittals shall conform to requirements of Section 01330 - Submittal Procedures.

B. Submit complete descriptive matter and data showing details of construction and other pertinent information pertaining to the equipment the Contractor proposes

to furnish including rated capacities, weights, accessories, electrical data and wiring diagrams.

C. Submit the following pump and motor information to the City for the City's approval, prior to the City issuing approval for ordering.

1. Make of pump and pump designation _____
2. Number of stages for present conditions _____
3. O.D. of bowls, inches _____
4. I.D. of column and wall thickness, inches _____
5. O.D. of column couplings, inches _____
6. Length of column sections, feet and inches _____
7. Calculated thrust at design condition for present operation, pounds _____
8. Motor thrust bearing capacity at specified RPM, pounds _____
9. Motor thrust bearing life, years _____
10. Brake horsepower at design condition for present operation, HP _____
11. Field efficiency of pump at design condition for present operation, percent _____
12. Wire-to-water efficiency at design condition for present operation, percent _____
13. Make of motor and rated horsepower _____
14. Speed of motor, RPM _____
15. Motor efficiency, percent
    a. Half load _____
    b. Three-quarter load _____
    c. Full load _____

16. Motor power factor, percent
    a. Half load _____
    b. Three-quarter load _____
    c. Full load _____

D. Submit curves for the City's approval showing guaranteed field performance of the pump the Contractor proposes to furnish based on present operating conditions. Curves shall show head-capacity, brake horsepower, motor input horsepower, pump efficiency, and overall (wire-to-water) efficiency. Note that field and not laboratory performance is to be shown on curves at scales subject to approval of the City.

E. Submit installation, operation and maintenance manuals, parts description, and similar instruction books. Provide three copies of each.

PART 2 P R O D U C T S

2.01 ACCEPTABLE MANUFACTURERS

A. Flowserve Pumps.

B. Floway Pumps.

C. Peerless Pumps.

D. Goulds Pumps.

E. American Turbine Pumps.

F. Ruhrpumpen Pumps.

2.02 GENERAL

A. Pump is to be of the deep well, multi-stage, vertical turbine, lineshaft type. Column pipe friction losses and losses of strainer, discharge elbow and pump are not included in scheduled total field head.

2.03 PUMP SELECTIONS

A. Select pump conservatively for scheduled conditions. Furnish pump which has highest available efficiency, with peak efficiency at or near rated conditions. Select pump that have a steep head-capacity curve within 400 gpm of rated conditions and continuously rising head from runout to shutoff.

B. Provide motors of the type and speed scheduled. Select motors that are not overloaded throughout the entire range of pump operation.

C. Operating Conditions

1. Definitions:

a. Total field head, or field head, as stipulated in these Specifications is the sum of the pressure head, in feet, at the center line of the pump discharge plus the vertical distance, in feet, from the center line of the pump discharge to the pumping level in the well.

b. Brake horsepower is the horsepower supplied to the shaft of an installed pump by the driver.

c. Field efficiency of an installed pump is the ratio of output power to input power supplied to the shaft, expressed as percent.

d. Overall efficiency of a pump installation is the ratio of the output power to input power supplied to the driver, expressed as percent.

e. Setting is the normal distance from the base plate to the top of the bowl assembly.

2. Design Condition:

a. The pump is to be designed to meet the present operating conditions given herein.

b. The Contractor is to state the number of stages required for the present conditions.

c. Curves showing guaranteed overall field performance of the pump offered for the present operating conditions shall be submitted to the City for approval before ordering the pump. All components of the pump to be installed under this contract shall be designed to withstand 1-1/2 times shutoff pressure developed by the pump with the stages and column setting required for future operating conditions and with the static water level no lower than 350 feet. Any balancing of the impellers for high thrust conditions required by the future operating conditions shall be incorporated in the construction of the present pump before it is assembled.

D. Provide pump to meet the following anticipated capacities and conditions:

1. Forest Cove Water Well No. 5:

a.	Design pumping rate, gpm	1,500
b.	Estimated static water level, feet	220
c.	Estimated pumping water level, feet	300
d.	Estimated discharge head above ground, feet	35
e.	Estimated field head, feet	355
f.	Maximum diameter of pump bowls, inches	14
g.	Column pipe setting, feet	460
h.	Minimum column pipe diameter, inches	10
i.	Minimum column pipe wall thickness, inches	0.365
j.	Minimum pump shaft diameter, inches	1.9375
k.	Minimum motor name plate, horsepower	250
l.	Motor speed, rpm	1,770
m.	Motor voltage, volts	460
n.	Minimum pump efficiency at design pumping rate, percent	82

2.04 COMPONENTS

A. Pump Head: The pump head shall be fabricated steel, with Class 150-pound ANSI flange. Design head to support pump set to a depth of at least 600 feet, column, motor, and maximum hydraulic thrust with 25 percent reserve. Sealed tension bearing at shaft to provide for continuous oil lubrication of shaft bearing during pump operation. Head to have sufficient space so that coupling can be installed below motor and above tube tension nut for easy motor removal. If unit weighs more than 28,000 pounds add steel lifting plate fitted with steel base plate. The discharge head shall be equipped with three openings herein described: 1-1/2-inch top tapped for air line tubing and two 2-1/2-inch top tapped for solution tubing. Holes in the discharge head also shall be provided for the anchor bolts set in the pump foundation. The Forest Cove Well No. 5 column pipe will be 10-inch diameter while the discharge piping will be 8-inch diameter.

B. Column Pipe: The total length of the column assembly on each pump shall be as specified from the base of the discharge head to the top of the bowl assembly. The column pipe shall be API-5L or ASTM A 53, Grade B seamless prime pipe. "Limited service" or "Mill reject" pipe will not be acceptable. The column pipe shall be furnished in interchangeable sections not exceeding 20 feet in length and shall be connected with extra strong, threaded, sleeve type couplings. Pipes shall be butted in the couplings to insure perfect alignment after assembly. The couplings shall be designed to provide the required strength, with ample safety factor should the pump be lowered and stages added to meet future operating conditions. The top column shall be factory machined of the proper length so that no cutting or machine work in the field is required to set the pump with the correct amount of tension on the oil tubing.

C. Shafting and Tubing: The line shaft shall be turned, ground and polished precision shafting, C1045 or approved equal. The shafting shall be supplied in interchangeable, threaded sections not over 20 feet long, with the ends machined smooth and at right angles to the axis of the shaft to insure perfect alignment. The shaft sections shall be connected with extra strong steel couplings machined from solid bar stock which must be of ample dimensions to provide a connection of greater strength than the shaft itself. Shafts must be true and straight before and after installation.

The shaft enclosing tube shall be Schedule 80 steel pipe, ASTM A 53, Type "E", Grade B threaded internally, 5-foot maximum lengths, connected by ASTM B505 or ASTM B584 bronze bearings, grooved for oil passage; coat tubing threads with sealing compound prior to assembly; support in column with rubber spiders, at maximum 40-foot spacing. The tube sections shall be straight, with ends machined square, to ensure that the entire length of the tubing will be straight and true when the ends are butted. The top tube shall be machined at the factory of the proper length to provide the correct tension in the oil tubing.

D. Bowl Assembly:

1. Pump bowls, including discharge and suction cases, shall be of close-grained ASTM A 48-83, Class 40, cast iron and shall have fusion epoxy lined water passages. Bowls shall have bronze sleeve type bushings to support and guide the shaft. Bushing material shall be bronze, ASTM B 505 alloy 836 or 844. Impeller shall be of the enclosed type, cast of bronze, ASTM B 584 alloy 836 or 844, accurately cast, machined, dynamically balanced and filed for optimum performance and minimum vibration. The impeller shall be single keyed or securely fastened to the bowl shaft with taper collets of Grade 416 stainless steel. The bowls shall have bronze wear rings.

2. The pump shaft shall be of stainless steel A276, Grade 416 turned, ground and polished. It shall be supported by bronze bearings of ASTM B 505 alloy C84400 above and below each impeller. The motor adapter and discharge case bearing shall be grease lubricated and protected from abrasives by bronze sand collars of ASTM B 584 alloy C83800. The size of the shaft shall be no less than that determined by ANSI/AWWA Specifications E101, Section A4.3, paragraph 4.3.3. The motor coupling shall be constructed of A276 type 416 stainless steel either keyed or splined as required to fit the motor shaft.

E. Suction Pipe: Five to ten feet of steel suction pipe, same size as pump suction fitting.

F. Oil Lubricator: Three gallon capacity aluminum reservoir with immersion heater and thermostat, filled as recommended by pump manufacturer; solenoid valve for automatic stop/start control of oil flow; flow regulating valve with sight glass; piping bypass around solenoid control valve with needle valve. Provide and install low level oil switch "Milltronics Pointek" with one form "c" contact rated 5A @ 30 Vdc and one solid state switch rated 2 VA, Fail Safe (Low Alarm). Oil piping to be type K copper. Mount securely on outside of pump head.

G. Motor: The Forest Cove pump shall be driven by a premium efficiency, 460-volt, 3 phase, 60 hertz, nominal 1,800 rpm, direct-connected vertical hollow shaft squirrel cage induction motor with 1.15 service factor, shielded, drip-proof, NEMA W.P.I. enclosure for outdoor operation with non-reverse ratchet. The motor, wiring, and insulation shall be copper with non-hydroscopic Class G, Class B temperature rise not to exceed insulation temperature rating when operating at service factor rating and 40°C ambient according to NEMA M.G. 1-1978-12.4.2. Wiring insulation to include extra dips and bakes for Gulf Coast high humidity. Conduit box shall be cast iron, water-tight and weatherproof. The motor is to be equipped with 120-volt space heater and guard screens.

The bearings in the motor shall be ball or spherical roller oil-lubricated. The thrust bearing in the vertical hollow shaft motor shall have an external thrust capacity capable of carrying 1.5 times the weight of all rotating parts of the pump plus the hydraulic load imposed by the impellers when the pump is operating at the capacity and total field head given for the future conditions. Radial and thrust bearings are to have a B-10 life of 75,000 hours and to have a bearing housing large enough to hold sufficient lubricant to minimize the need for frequent lubrication. Facilities are to be provided for adding new oil or grease and draining old oil without major motor disassembly.

Minimum motor efficiency to be 95.0 percent at full load and the motor is to have a maximum locked rotor indicating code letter of F. The minimum power at rating is to be 0.85.

The motor is to be equipped with a stainless steel name plate securely attached to the motor with stainless steel screws. All data is to be permanently stamped into the name plate including the motor horsepower, rpm, NEMA design, phase, hertz, service factor, ambient temperature, frame size, duty, class of insulation, locked KVA code, full load amps, locked rotor amps, model and catalog number, bearing identification by AFBMA number and NEMA nominal efficiency.

The motors shall be manufactured by U.S. Motors, General Electric, Reliance, Toshiba, or Siemens-Electric Machinery. No substitutions accepted.

2.05 PUMP FOUNDATION

A. The pump foundation shall be of reinforced cast-in-place concrete.

B. Concrete and reinforcing steel shall conform to Section 03315 – Concrete for Utility Construction.

C. If it is necessary to make any changes to the pump foundation to install a pump, the Contractor shall obtain prior approval of the City and shall make the change at his own expense.

2.06 AIR-LINE TUBING

A. The air-line tubing shall be type 1005-44204 Dekoron, 1/4-inch O.D., single line, stainless steel tubing with 0.032-inch wall thickness, PVC coating, as manufactured by Eaton Control Systems, or approved equal. The run of air-line tubing shall be one continuous length from end to end without any splice or joint.

2.07 SOLUTION TUBING

A. Solution tubing, installed on the column pipe for insertion of chemical solution shall be Schedule 80, NSF-PW, 1120, PVC (polyvinyl chloride) plastic pipe in accordance with ASTM Standard D1785, color – gray, 1-1/4-inch I.D., as manufactured by Jet Stream Plastics, Inc., or approved equal, in 20-foot joints with bell-and-spigot ends for PVC cement-solvent welding.

B. The solution tubing strings shall be two continuous lengths of tubing on opposite sides of the column pipe that extend from the bowl assembly discharge case through the discharge head base to the access plugs. The solution tubing strings shall be secured to each column pipe joint, a minimum of two separate locations, utilizing vinyl filament tape or approved equal. The solution tubing strings shall be secured to the top side of the discharge head utilizing a CGB connector, straight male thread, steel finish, 2-inch I.P. thread size, complete with gland nut and neoprene bushing (Catalog No. CGB 5913) as manufactured by Crouse-Hinds, or approved equal. The solution tubing strings shall be provided with sufficient

stick-up above the discharge head base for ready access and a PVC screwed joint plug. The bottom of each solution tubing string shall be open.

PART 3 E X E C U T I O N

3.01 INSTALLATION

A. Pump shall be installed in accordance with manufacturer's written instructions by a water well contractor with specific experience installing lineshaft deep well pumps.

B. Equipment will be installed in accordance with manufacturer's instructions, if included, using lifting lugs, as provided, or by slings attached to the equipment. No temporary lifting lugs shall be utilized. Equipment shall be handled with sufficient care to prevent damage. Slings shall have adequate protection to prevent marring the surfaces of the equipment.

C. Air-Line Tubing: The air-line tubing shall be one unbroken continuous length from the bowl assembly discharge case through the discharge head base to the air-line gauge assembly. The tubing shall be secured to each column pipe joint, a minimum of one location, utilizing vinyl filament tape, or approved equal. The tubing shall be secured to the top side of the discharge head base utilizing a CGB connector, straight male thread, steel finish, 1-inch I.P. thread size, complete with gland nut and neoprene bushing (Catalog No. CGB 293) as manufactured by Crouse-Hinds, or approved equal.

D. Air-Line Gauge: Marshalltown, 4-1/2-inch, dual scale, calibrated in feet of water and pounds per square inch.

E. Air Pump: Provide hand air pump and Schraeder or Deming snifter valve.

3.02 EFFICIENCY AND TESTING

A. The overall wire-to-water efficiency of the installed pump and motor shall be determined by measurement of capacity, field head, and kilowatt input to the motor. An overall wire-to-water efficiency test shall be conducted by the Contractor on the pump after installation and before final acceptance.

B. The Contractor shall supply all equipment, instruments, and labor necessary for such test and the City's representative shall be present during the test.

C. Readings shall be taken at a number of points from about 70 percent of design capacity to maximum capacity. A watt-meter shall be used to determine kilowatt input to the motor. Electric current shall be measured on the incoming power side.

D. Contractor shall prepare a field head-capacity curve from test data and submit four copies of it to the City. Any deficiencies in the head-capacity or efficiency or operation of a pump and motor shall be corrected by the Contractor at its expense prior to acceptance.

3.03 WARRANTY

A. The pump manufacturer shall warrant the units being supplied to the City against defects in workmanship and material for a period of one year after substantial completion, operation and service. The warranty shall be in printed form and apply to all units.

3.04 PUMP FOUNDATION

A. The pump foundation shall be of reinforced cast-in-place concrete in conformity with Section 03315-Concrete for Utility Construction, and with dimensions and details as shown on the Drawings.

B. All cement grout shall be removed from the surface casing inside the foundation, leaving the exposed surface of the casing clean before concrete for the foundation is placed.

C. The surface casing vent pipe shall be cut into the surface casing and welded to it prior to placing the forms for the concrete pump foundation. The angle formed between the axis of the surface casing and the axis of the vent pipe shall not be greater than 45 degrees, and the threaded upper end of the vent pipe shall extend outside the final face of the foundation as shown by the Drawings.

3.05 STERILIZATION

A. Disinfection procedures shall be in accordance with AWWA Standards for Disinfection of Wells—ANSI/AWWA C654.

B. Samples for bacteriological analysis shall be collected in a sterile container at the pump discharge, and a test made for coliform organisms. After sterilization, the well shall be pumped at open discharge until at least 500,000 gallons of water have been pumped before the first sample is collected. The samples shall be collected on three consecutive days and shall be tested for coliform organisms at the City of Houston East Water Treatment Plant on Federal Road. Samples shall be collected and analyzed on three successive days without chlorination between

sampling. If any coliform organisms are found in any of the samples, the Contractor shall re-sterilize the pump and well and have the water resampled as stated above until such time as no coliform organisms are found in the water samples collected after at least 500,000 gallons have been pumped from the well after the last well chlorination prior to collecting the first sample and two additional samples are collected on three successive days following sterilization. All expenses of sterilization of the pump and analyses for coliform organisms shall be borne by the Contractor.

C. The water discharged by the pump following disinfection shall be dechlorinated to a level of 2.0 or less mg/l chlorine before it is allowed to leave the site.

PUMP DIMENSIONS SCHEDULE
(Anticipated initial conditions)

	Forest Cove Well No. 5
Pumping Rate, gpm	1,500 gpm
Static Water Level, feet	220
Pumping Water Level, feet	300
Column Pipe Diameter, inch	10
Column Pipe Setting, feet	460
Solution Tubing, feet	460
Air-Line Tubing, feet	460
Lineshaft Motor, hp	250
Motor Voltage, volts	460
Maximum RPM	1,800
Minimum Bowl Efficiency, percent	82
Maximum Pump Bowl Outside Diameter, in.	14

END OF SECTION

THIS PAGE IS INTENTIONALLY LEFT BLANK.

SECTION 15170

LOW VOLTAGE MOTORS

PART 1 GENERAL

1.01 SECTION INCLUDES

A. Specification for low voltage motors.

1.02 REFERENCES

A. American National Standards Institute/Anti-Friction Bearing Manufacturers Association (ANSI/AFBMA): Load Ratings and Fatigue Life for Ball Bearings.

B. American National Standards Institute/national Electrical Manufacturers Association (ANSI/NEMA): MG 1 - Motors and Generators.

C. American National Standards Institute/National Fire Protection Association (ANSI/NFPA): NFPA 70 - National Electrical Code (NEC).

D. American National Standards Institute/Institute of Electrical and Electronics Engineers (ANSI/IEEE)

1. IEEE112 - Standard Test Procedure for Polyphase Induction Motors and Generators
2. IEEE114 - Standard Test Procedure for Single-Phase Induction Motors

E. American National Standards Institute/Underwriters Laboratories, Inc. (ANSI/UL)

1. UL547 - Thermal Protectors for Motors
2. UL674 - Electric Motors and Generators for Use in Hazardous Locations, Class I Groups C and D, Class II Groups E, F and G

F. Institute of Electrical and Electronics Engineers (IEEE)

1. 85 - Test Procedure for Airborne Sound Measurements on Rotating Electric Machinery
2. 43 - Recommended Practice for Testing Insulation Resistance of Rotating Machinery

G. American Society of Heating, Refrigerating, and Air-conditioning Engineers, Inc. / Illumination Engineering Society of North America (ASHRAE / IES): 90.1-1989, Table 5.1 - Minimum Acceptable Nominal Full-load Motor Efficiencies for Single Speed Polyphase Motors.

1.03 SUBMITTALS

A. Submit the following under the provisions of Section 01330 - Submittals:

1. Outline drawings
2. Completed motor data sheets
3. Assembly drawings
4. Anchor bolt location drawings
5. Electrical schematics and wiring diagrams
6. Equipment performance curves and data
7. Bill of installation/assembly materials
8. Equipment weights
9. Catalog data
10. Assembly/disassembly sizes and weights
11. Operating instructions
12. Maintenance and lubrication recommendations
13. Recommended spare parts for startup including prices
14. Special maintenance tool requirements
15. Recommended spare parts list for one year operation
16. Quality control procedures
17. Nondestructive test procedures
18. Acceptance test procedure
19. Surface preparation and painting procedure
20. Shipping, handling, and storage procedures
21. Installation/erection procedure
22. Code compliance certificate
23. Electrical equipment heat run test records
24. Nameplate data
25. Performance/acceptance test report
26. Code data reports

1.04 QUALITY ASSURANCE

A. Tests

1. Inspect and test motors in accordance with specified NEMA standards. Test polyphase motors to the requirements of ANSI/IEEE 112. Test single phase motors to the requirements of ANSI/IEEE 114. See data sheets for other standard test requirements that may be specified.

1.05 DELIVERY, STORAGE AND HANDLING

A. Prepare each unit for the type and mode of shipment specified. The preparation shall be suitable for at least six months of outdoor storage from time of shipment requiring no disassembly prior to operation (except for bearing and seal inspections).

B. Provide instructions as necessary to preserve the integrity of the storage preparation after the equipment arrives at the jobsite.

C. Coat exterior machined surfaces with a suitable rust preventative.

D. After drained and cleaned, coat internal areas of bearings and auxiliary equipment in oil lubrication systems fabricated from carbon steel with a suitable oil-soluble rust preventative.

E. Provide threaded openings with steel caps or solid-shank steel plugs. Do not use nonmetallic plugs or caps.

F. When sleeve bearings are furnished, block the rotor to prevent axial and radial movement.

G. When space heaters are furnished, make heater leads accessible without disturbing the shipping package. Tag the leads for identification.

PART 2 P R O D U C T S

2.01 MANUFACTURERS

A. General Electric.

B. Reliance Electric.

C. Siemens.

D. Toshiba.

E. U.S. Motors.

F. Westinghouse

2.02 DESIGN

A. This specification defines the minimum requirements for low-voltage, random-wound, squirrel-cage, induction motors in the NEMA frame sizes for classified electrical hazardous and nonclassified area service.

B. Use this specification for the selection and purchase of induction motors purchased separately or furnished with driven equipment as a package.

C. This specification, along with the reference documents make up the requirements for motors up to and including 200 hp.

Use driven equipment specifications and motor data sheets to supplement this specification and identify special project requirements.

D. Motors purchased with this specification will drive pumps, compressors, fans, agitators, conveyors and other similar equipment. Motors will be installed in a plant environment that may include high humidity, storms, salt-laden air, insects, plant life, fungus, rodents as well as traces of petroleum and/or chemicals.

E. Motors shall perform satisfactorily for the application and unusual conditions specified on the data sheets.

F. Motors, electrical components and installation shall be suitable for the hazardous area classification (class, group, and division) specified on the data sheets and shall meet the requirements of ANSI/UL 674 and the NEC.

G. Make motors suitable for operation in an outdoor corrosive and wet environment.

H. When motors are furnished with the driven equipment as a package, motors shall also meet the requirements of the driven equipment specification.

I. Design motors for operation at a temperature of up to 40°/104°F ambient and at an elevation of up to 1000 m/3300 ft above sea level unless specified otherwise on the data sheets.

2.03 PERFORMANCE REQUIREMENTS

A. Confirm motors have ample capacity to supply the maximum output demanded by the driven equipment and have a speed-torque-current characteristic appropriate to the driven equipment.

B. Confirm motors ability to overcome starting load inertia and accelerate the load to rated speed within 15 seconds at 80 percent of rated nameplate voltage, without exceeding the motor time-temperature damage curve.

C. Design and construct motors for continuous full load duty, and for continuous or intermittent operation under any extreme environmental condition noted on the data sheets.

D. Three-phase induction motors shall be ANSI/NEMA MG 1 Design B. Motors driving high-torque loads may be NEMA Design C or D, providing so stated in the proposal.

E. Single-phase fractional horsepower motors shall be NEMA Design N.

F. The single speed, polyphase motors shall have efficiencies as shown in ASHRAE/IES Standard 90.1 - 1989, Table 5-1.

2.04 ENCLOSURES AND FRAMES

A. Motors in Class I, Division 1 hazardous areas and single-phase fractional horsepower motors in Division 2 hazardous areas shall have NEMA totally enclosed, fan-cooled (TEFC) explosion proof enclosures and shall bear the UL label of approval for the hazardous area classification specified.

B. Motors in Class II, Division 1 hazardous areas shall have TEFC explosionproof/ dust-ignitionproof enclosures and shall bear the UL label of approval for the hazardous are classification specified.

C. Motors in Class II, Division 2 areas shall have TEFC or TEFC / Dust-ignitionproof enclosures and shall be certified approved for the hazardous area classification specified.

D. Motors frames, enclosures, terminal boxes, fan cover guards and air passages shall be cast iron or heavy fabricated steel of such design or proportions as to hold all motor components rigidly in proper position, and shall meet all NEMA requirements for the type of enclosure employed. End bells shall be cast iron. Steel sheet or plate used shall have a thickness of at least 1/8 in. Fans, breathers, drains, screens, covers and hardware shall be corrosion-resistant materials. Fractional horsepower motors may have rolled steel stator frame and cast iron brackets with integral mounting feet.

E. Make motor enclosure fans low inertia, nonsparking type, and suitable for bidirectional rotation and mount on hub with stainless steel bolts.

F. Furnish each enclosure with a stainless steel automatic breather/drain located at the low point of the enclosure.

G. Motor frame and enclosure shall have provisions for grounding to the main grounding system.

Drill and tap rear foot on horizontal motors and the flange base on vertical motors on the junction box side for a service post ground connector.

H. Provide motors weighing more than 300 lbs. with lifting eyebolts, rings or lugs capable of supporting the weight of the motor.

2.05 ELECTRICAL REQUIREMENTS

A. Design motor for 60 Hz power at the nominal operating voltages listed below, unless specified otherwise on the data sheets.

1. 460V, three-phase.

B. Induction motors shall be random-wound, squirrel-cage rated for continuous duty and suitable for across-the-line starting, at rated voltage.

C. Determine motor horsepower, speed, torque and special operating requirements from the requirements of the driven equipment and as specified on the data sheets.

D. Use copper for motor windings and terminal leads. Aluminum is not an allowable material for any portion of the motor other than die-cast rotor (fabricated aluminum rotors are not acceptable). Copper rotors shall not be fabricated using brazing maler and any copper alloy must contain less than two percent phosphorous.

E. Provide three-phase single speed motors with three leads.

F. Provide two-speed motors with two windings.

G. Motors shall have a 1.15 service factor (SF) rating unless specified otherwise on the data sheets.

H. Motor insulation shall be a minimum of Class F epoxy nonhygroscopic material with temperature rise limited to Class B design rise of 90°C by resistance method at 1.15 SF.

I. Motors shall operate successfully under running conditions at rated load with variation in voltage and frequency up to the limits set by ANSI/NEMA MG 1-12.44.

J. Unless specified otherwise on the data sheets, motors shall be suitable for the number of full-voltage starts as required by ANSI/NEMA MG 1-12.50 as a minimum.

2.06 TERMINAL BOXES

A. Make motor terminal boxes weatherproof and with threaded conduit entrances with water-resistant seals between boxes and motor frame. Design the line-terminal box to allow box to be rotated in four 90 degree steps for bottom, side or top entry of conduit or cable.
The box shall be on the left-hand side (NEMA F1) of the motor when viewed from the connecting shaft end unless specified otherwise on the data sheets. Locate terminal box for space heaters (when supplied) on the same side as the line terminal box.

B. Size the line terminal box so that feeder cables can be connected to motor leads for terminals without damage to the cable or the leads. Oversize the terminal box to exceed the minimum volumes shown in the NEC Section 430-12 and provide adequate space to mount and enclose all devices mounted within.

C. Furnish the line terminal box with suitable compression ring-type, permanently numbered, cable connectors for incoming bolted-cable connections and one clamp-type ground terminal lug of sufficient size to contain a conductor the same size as motor leads.

D. Wire accessory leads to a terminal board in a terminal box or boxes separate from the line leads. Supply separate terminal boxes for the leads for space heaters, and temperature detectors, current transformers, and other similar accessories, when supplied.

2.07 ELECTRICAL ACCESSORIES

A. Arrange space heaters, when specified on the data sheets, to provide optimum uniform heating of the stator winding and prevent condensation in the motor at ambient temperature when motor is not in operation. Space heaters shall be rated 240 V but shall be connected for operation at 115V. Space heaters shall have maximum sheath temperature of 150°C and shall be approved for the specified hazardous area classification.

B. Provide winding thermal protection, when required, in accordance with ANSI/UL 547 and consisting of differential heat sensing devices embedded in each motor winding. The devices shall be sensitive to both overtemperature and rate of temperature rise.

2.08 BEARINGS AND LUBRICATION

A. Grease or oil-lubricated anti-friction ball or roller bearings are preferred within the application limits. Sleeve-type bearings may be acceptable when recommended by the manufacturer for a particular application and/or specified on the data sheets. Sealed grease-lubricated bearings are acceptable only for fractional horsepower motors in noncritical service.

B. Motors shall have proper bearing insulation to prevent circulation of shaft currents and resulting damage. Provide also insulating means for any oil-supply connections and monitoring equipment to prevent electrical bypassing of the bearing insulation.

C. Unless specified otherwise on the data sheets, bearings for all direct--connected and belted service motors shall have an L_{10} rating life in accordance with ANSI/AFBMA 9, of at least 40,000 hours.

D. Size bearing housing for grease-lubricated bearings adequately to minimize need for frequent lubrication. Design bearing housing to prevent loss of grease from the bearing cavity and to prevent entry of foreign material into the bearings. Provide housing for grease-lubricated bearings with two plugged openings accessible from the exterior of the motor, one for receiving a pressure grease fitting, and the other to serve as a drain and vent during greasing.

E. Provide oil-lubricated bearing housings a reservoir of sufficient depth, to serve as a settling chamber for foreign materials, with a drain plug, and vents as required, accessible from the exterior of the motor. Furnish oil-lubricated motors with a constant oil-level sight gauge mounted on the motor housing and marked with running- and stopped-oil levels.

F. Provide motors with suitable seals to prevent moisture from entering through the shaft openings. For applications where hoses and water are used for cleanup, provide an Inpro/Seal isolator (labyrinth seal) on the shaft end of the motor.

G. For in-line pumps, special high thrust bearings are required for drive motors, except for pumps where the thrust bearings are provided as an integral part of the pump. When motors are purchased separately, bearing thrust requirements will be specified on the data sheets.

2.09 ADDITIONAL REQUIREMENTS FOR VERTICAL MOTORS

A. Solid shaft vertical motors are acceptable for all applications except when the connection to the driven equipment consists of sectional driven shaft, which may unscrew and lengthen in the event of reversal of direction.

B. Hollow-shaft vertical motors are acceptable for all applications when the thrust is in the direction to engage the coupling.

C. Hollow-shaft vertical motors coupled to a sectional drive shaft with screwed joints shall have special couplings described as follows:

1. Provide motors, except the explosionproof type, with self-releasing couplings designed to disconnect motor from driven equipment and permit lengthening of drive shaft upon reversal of rotation.
2. Provide explosion proof motors with nonreversing couplings of spark-resisting construction, designed to prevent reverse rotation.

D. Design vertical motor thrust bearings conservatively to carry maximum axial thrusts (up and down) imposed by driven equipment.

E. Vertical motors shall preferably have oil-lubricated, top and bottom bearings.

F. Vertical motor bases shall be NEMA Type P.

G. Provide vertical motors with a positive, nonreversing, corrosion-resistant ("anti-ratchet") mechanism.

H. Provide vertical motors with fan-end splash shields.

2.10 SLIDING BASE AND SOLE PLATE REQUIREMENTS

A. Motors for adjustable belt and chain drives, 1 hp larger, shall be provided with slide rails, or a double-screw adjusting heavy duty sliding based. Fractional horsepower motors shall have slotted holes. Fabricate sliding base from heavy steel to withstand vibration and corrosive environment and paint it the same color with the same paint system as the motor.

B. Mating surfaces shall be ± 0.0002 in./ft and finished to 250 microinches, and shall be protected during shipping.

C. Motors without sliding bases and that will not be directly mounted on equipment bases shall be equipped with sole plates. Sole plates will be set into buyer's foundation and the motor will be mounted onto the plate.

2.11 ROTOR BALANCING AND VIBRATION

A. Balance motor rotors dynamically according to NEMA standards. Depositing weld metal, solder and the like on the rotor to effect a balance will not be acceptable. Remove parent metal to achieve balance without affecting the structural strength of the rotor. Chiseling or sawing parent metal is prohibited.

B. Measure vibration in all directions with the motor running uncoupled at no load, normal voltage and frequency, and at each speed of the operating range. Motor vibration shall not exceed the total amplitude, peak-to-peak values given in ANSI/NEMA MG 1-12.05A as measured in accordance with ANSI/NEMA MG 1-12.07.

2.12 NAMEPLATES

A. Fasten motor stainless steel nameplates securely to the motor with stainless steel screws. Nameplates shall include as a minimum the information required by ANSI/NEMA MG 1-16.61.

2.13 FINISH

A. Motors shall be primed and finished using the motor manufacturer's standard epoxy painting system unless specified otherwise on the data sheets.

B. Cover internal surfaces, e.g., shaft, rotor, stator, and other similar components, with a corrosion-resistant coating of epoxy or equal material for increased life.

2.14 NOISE LEVELS

A. Determine motor noise level in accordance with IEEE 85. Levels or noise generated by a motor shall not exceed 85 dbA at a distance of 1 m/3.3 ft unless specified otherwise on the data sheet.

B. Noise level requirements may be also covered by a separate noise requirements specification included with the driven equipment specification.

PART 3 E X E C U T I O N

3.01 PREPARATION

A. Verify dimensions of motor foundation with sole plates or slide rails in place.

3.02 INSTALLATION

A. Install the motor in accordance with the Manufacturer's published instructions using the necessary tools and instrument to ensure proper fit and alignment with the driven machine.

B. Before coupling up with the driven machine, the following work should be performed.

1. Test the motor winding insulation resistance in accordance with IEEE 43.
2. Terminate cables to the motor leads.
3. Energize motor momentarily to check rotation.
4. Check shaft of driven machine to ensure free movement.

C. Couple motor up with driven machine.

D. Record motor nameplate data.

END OF SECTION

LOW VOLTAGE MOTORS

DATA SHEET 1 of 3

1. **IDENTIFICATION**
2. CLIENT _____ MANUFACTURER _____
3. PROJECT _____ MODEL NO. _____
4. JOB NO. _____ SIZE _____
5. PLANT LOCATION _____ SERIAL NO. _____
6. ITEM NO. _____ INQUIRY NO. _____
7. SERVICE _____ P.O. NO. _____
8. NO. ITEMS REQUIRED _____
9. _____
10. **SITE DATA**
11. TYPE INSTALLATION _____
12. AREA CLASSIFICATION: CLASS ____ DIVISION _____ GROUP _____ NONCLASSIFIED _____
13. UNUSUAL ENVIRONMENTAL CONDITIONS: (E.G., DUST, INSECTS, FUNGUS) _____
14. AMBIENT TEMP: MAX _____ ^{O}F MIN _____ ^{O}F, ALTITUDE _____FT ABV S.L.
15. OTHER: _____
16. **OPERATING DATA**
17. _____ HP _____ SYNC RPM _____ V MOTOR TORQUES:
18. PH _____ FREQ _____ SF _____ STD (PER NEMA MG 1, PT 12) _____
19. INSUL CLASS _____ LOCKED ROTOR (MIN) _____ % _____ FULL LOAD
20. DUTY: CONTINUOUS _____ INTERMITTENT _____ BREAKDOWN (MIN) _____ % _____FULL LOAD
21. DESIGN EFFICIENCY: STD ___ HIGH ___ MULTISPEED: (NO. SPEEDS & WINDINGS) _____
22. STARTING METHOD: FULL VOLTAGE (FV) _____ VARIABLE TORQUE _____ S - _____ W
23. _____ RED VOLTAGE _____% FV CONSTANT TORQUE _____ S - _____ W
24. STARTING VOLTAGE _____% RATED VOLTAGE CONSTANT HP_____S - _____ W
25. STARTING CONDITION: LOADED ___ UNLOAD _____ SPECIAL WINDINGS _____
26. EXT LOAD INERTIA _____ LB/FT^2@ _____ RPM OTHER _____
27. **CONSTRUCTION**
28. ENCLOSURE: _____
29. ROTATION: (VIEWED FROM END OPPOSITE COUPLING) CW _____ CCW _____
30. TYPE DRIVE: (E.G., DIRECT, V-BELT) _____ TYPE MTG: (E.G., NEMA F-1, W-1) _____
31. VERTICAL MOTORS: MAX THRUST _____ LB UP/DN SHAFT: HOLLOW _____ SOLID _____
32. MODIFICATIONS: (CHECK IF REQD & DETAIL IN "OTHER") _____
33. BASE: SLIDING _____ RAILS _____ SOLEPLATE _____OTHER _____
34. BEARING: BALL/ROLLER _____ SLEEVE _____ BEARING L_{10} RATING LIFE _____
35. LUBRICATION: _____
36. COUPLING-PRESSED ON: NONE ___ HALF-COUPLING _____ V-BELT SHEAVE _____ BRAKE: _____
37. SHAFT EXTENSION: STD _____ EXTRA LONG _____ DOUBLE-ENDED _____BREATHER & DRAIN: _____
38. SCREENED OPENINGS _____ SPECIAL TESTS _____ PAINT _____
39. AIR FILTERS: MFR _____ PROVISIONS ONLY _____ DIFF PRESS SWITCH REQD _____
40. MAIN TERMINAL BOX: OVERSIZED _____ SPACE FOR STRESS CONES _____ OTHER DEVICES _____
41. SURGE PROTECTION: SURGE ARRESTERS _____ SURGE CAPACITORS _____
42. CT'S FOR DIFF PROTEC.: NO. _____ RATIO ____ SELF-BALANCE ARRANG. _____TRADITIONAL ARRANG. _____
43. GROUND CONNECTION: IN TERM BOX _____ EXTERNAL FRAME _____
44. SPACE HEATERS: _____ V _____ PH MAX. SHEATH TEMP _____ ^{O}C
45. RTD'S: MATLS TYPE _____ NO. PH _____ OHMS _____
46. BEARING: HEATER: _____ V _____ PH BRG INSUL: NONDRIVE END _____ BOTH BRGS _____
47. VIRBRATION DEVICES; _____
48. OTHER: _____
49. _____
50. _____

DATA SHEET 2 of 3

MANUFACTURER'S INFORMATION

RATING _____ HP _____ V _____ Hz SF _____ DUTY _____
SYNCHRONOUS SPEED _____ RPM, FULL LOAD SPEED _____ RPM
ENCLOSURE _____
HAZ AREA CLASS: SUITABLE FOR CL _____ GR _____ DIV _____ NONCLASSIFIED _____
MFR'S TYPE _____ FRAME SIZE _____
ROTATION: (VIEWED FR END OPPOSITE CPLING) CW _____ CCW _____
MOTOR CHARACTERISTICS: _____ V _____ PH _____ Hz

% LOAD:	1/2	3/4	FULL LOAD	SF
CURRENT, A				
EFFICIENCY				
POWER FACTOR				

CURRENT: LOCKED ROTOR (LR) @ RATED VOLTAGE _ A, LR @ _% RATED VOLTAGE _____ A
ACCELERATION TIME: @ 80% RATED VOLTAGE ___ SEC @ 100% RATED VOLTAGE _____ SEC
ALLOWABLE TIME @ LOCKED ROTOR: MOTOR HOT (@ FL TEMP & 40°C AMBIENT) _____ SEC
MOTOR COLD (40°C AMBIENT) _____ SEC
TRANSIENT REACTANCE _____ PER UNIT SUBTRANSIENT REACTANCE _____ PER UNIT
INSUL SYSTEM CLASS _____ TEMPERATURE RISE _____ °C
TORQUE, FT-LB: LOCKED ROTOR _____ PULL-UP _____ BREAKDOWN _____
ROTOR WK^2 ($LB\text{-}FT^2$ AT MOTOR SPEED) _____
OPEN-CIRCUIT TIME CONSTANT _____ SEC
BRG CPLG END: MFR TYPE _____ PART NO. _____
BRG OUTBD END: MFR TYPE _____ PART NO. _____
BRG THRUST TOP (BOTTOM) MFR TYPE _____ PART NO. _____
PRESSURE LUBRICATION: RANGE _____ PSIG FLOW RANGE _____ GPM
TEST REPORT REFERENCE: ROUTINE _____ COMPLETE _____ IMMERSION _____
MOTOR OUTLINE DWG NO. _____ ACCELERATION CURVE NO. _____
WEIGHTS: NET _____ LB ROTOR __ LB SHIPPING _____ LB
MAX ERECTION _____ LB MAX MAINTENANCE _____ LB
OTHER: _____

ACCESSORIES

WINDING RTD RATING: OHMS _____ ALARM SETTING _____°C 2-WIRE _____ 3-WIRE _____
THERMAL TEMPERATURE SWITCH CONTACTS: NORMALLY OPEN _____ NORMALLY CLOSED _____
OPENING SETTING _____°C CLOSING SETTING _____° C
BEARING TEMPERATURE DET RECOMMENDED SETTING: ALARM _____°C TRIP _____°C
SPACE HEATERS: WATTAGE _____ kW, VOLTAGE _____ V, _____ PH
MAXIMUM SURFACE TEMPERATURE _____ °C
CURRENT TRANSFORMERS: DIFFERENTIAL _____ RATIO _____ NO. MOUNTED _____
PH _____ RATIO _____
OTHER _____ RATIO _____
SURGE PROTECTION: LIGHTNING ARRESTER NO. _____, VOLTAGE _____V
CAPACITOR NO. _____ CAPACITANCE _____
FILTER: MFR _____ TYPE _____
OTHER: _____

DATA SHEET 3 of 3

MANUFACTURER'S INFORMATION

PRESSURE LUBE SYSTEM

MAIN PUMP: INTEGRAL _____ SEPARATE _____ IF SEPARATE, VERTICAL _____ HORIZONTAL _____

TYPE DRIVE: STEAM TURBINE _____ MOTOR _____

DRIVE CHARACTERISTICS: PRESSURE _____ PSIG TEMP RANGE _____ °F TO _____ °F

_____ V _____ PH _____ Hz

FILTER: SINGLE _____ DUPLEX _____

PRESSURE CONTROLLER NO. _____ RELIEF VALVE NO. _____ SETTING _____ PSIG

COOLERS: TWIN _____ SINGLE _____ CONSTRUCTION MATLS _____

VIBRATION INDICATOR IDENTIFICATION: CHARACTERISTICS: SETTING: _____

_____ V

AUX CONTACTS: NO ___ NC _____

OTHER: _____

WINDING AIR COOLERS

NO. OF SECTIONS _____ SECTION RATING, % OF FULL LOAD _____

CONSTRUCTION MATL DATA SHEET REFERENCE: AIR/AIR _____ AIR/WATER _____

WATER PRESS: MAX _____ PSIG MIN _____ PSIG

WATER FLOW: MAX _____ GPM MIN _____ GPM

FLOW SENSING DEVICE: IDENTIFICATION: _____ _____ V

AUX RELAY CONTACTS: NO _____ NC _____

HIGH-FLOW ALARM SETTING _____ GPM

LOW-FLOW SHUTDOWN SETTING _____ GPM

OTHER: _____

SECTION 16012

ELECTRICAL WORK

PART 1 G E N E R A L

1.00 CONDITIONS

A. This copyright protected © specification is issued confidentially for this specific project only. Reproduction of this document for any other purpose is prohibited.

B. Not Used

C. Contractor shall verify requirements of Item 2.01 – "Materials" before bidding.

D. Contractor to conform to Item 1.06 – "Contractor Qualifications" of this specification before bidding.

E. General Contractor is solely responsible for coordinating all electrical requirements of all equipment installed under this contract. Electrical Subcontractor shall confirm this with General Contractor before bidding. Within 10 days of "Notice to Proceed," the General Contractor shall appoint a person responsible for coordination of all electrical controls and equipment that are a part of this project and shall, at that time, notify Engineer in writing of that person's name, telephone number, fax number, address, and all other pertinent information.

F. This specification section is an inherent part of all work performed on this project and its contents shall apply for any and all electrical power, control and instrumentation related work. Contractor shall advise all Subcontractors and Vendors accordingly.

G. Warning: Electrical systems for this project have lethal voltages present. Contractor shall not work on energized equipment except when absolutely necessary and then only in the presence of another trained, experienced Electrician and with proper protective gear. See Item 1.06 – "Contractor Qualifications" for safety training requirements.

H. All correspondence, RFI's, and submittals concerning electrical, instrumentation, and controls matters shall be from General Contractor and shall have statement that General Contractor has verified the correctness or validity of the correspondence, etc. in respect to contractual requirements of the plans and specifications.

Any correspondence, etc. not having this statement or determined to be covered in the requirements of the plans and specifications will not be responded to and the Contractor shall be fully responsible for any action or non-action thereof.

I. All references to "days" in the electrical, mechanical, instrumentation, and controls specifications means "working days." All prequalification under this specification shall be submitted no later than ten (10) days prior to bid date.

J. Installation shall conform to most recent National Electrical Code, International Building Code, and Local Codes. In addition, Contractor shall follow all requirements of NFPA 70E - "Standard for Electrical Safety in the Work Place." Of specific importance are all the requirements of Article 400.11 – "Flash Protection."

K. Plans and diagrams are illustrative and may not contain all devices wiring and controls required to perform the function intended without reference to Specifications. Location and alignment of motor control centers or other equipment shown on Plans may require adjustment for some Equipment Manufacturers products, and this requirement is the Contractors sole responsibility.

L. Substitutions for equipment specified or shown on plans shall be as pre-approved prior to bidding unless specified or shown on plans as "or equal." Where noted as "pre-approved," indicates approval is required prior to bid acceptance.

M. All software or programs provided by any Vendor or Contractor shall be open activation without undisclosed passwords, keys, and/or means or devices that prevent Owners access to programs.

All software shall be new copies for Owner with no cost attachments. No exceptions.

N. All references to plans and/or drawings refer to the complete set of contract plans and not specifically electrical only, unless stated otherwise.

O. Additions or modifications to existing facilities involves a certain degree of uncertainty and all existing, hidden or unknown conditions may not appear on plans. Contractor is to consider this when bidding and shall cover all reasonable unknown conditions not evident in pre-bid site visit, which is necessary to familiarize Contractor with observable pre-existing conditions. Contact Engineer concerning any questions prior to bidding job.

P. MCC's shall be fabricated to fit the available space shown on plans. This may require special enclosures. Relocation up to 40 feet from where shown on plans may be required and shall be included in bid cost.

Supplier and Contractor shall notify Engineer of any variations in size, location or orientation before fabricating equipment. Listing of acceptable Equipment Manufacturers does not limit or remove the intent of this requirement.

Q. All devices, fittings, connectors, supports, brackets, and miscellaneous hardware normally used for installation of electrical equipment may not be shown in detail. Contractor shall provide all these items and included them in bid price.

R. Any change orders or additional work beyond the scope of this project as bid by Contractor shall be approved in writing by Engineer. Any unapproved work performed is at Contractor's risk.

S. Installation shall conform to layout, routing, and details shown on Plans and described in Specifications. Any variations shall be pre-approved in writing by Engineer before work starts. Any unauthorized work shall be removed at Contractor's cost and with no delay in project schedule.

1.01 DESCRIPTION

A. The work shall include providing materials and equipment required for installation of a complete and functioning electrical system as specified and as shown on the drawings.

B. This section is an integral part of all Specification Sections related to electrical, control and instrumentation construction under this contract. Contractor shall check all other plans and specifications for this project and include items and circuits accordingly. The total set of construction documents make up the requirements for work for this project and shall be included in Contractor's bid at no additional cost to Owner or Owner's Representative.

C. All plans and specifications for this project are representative of the design intent and may not contain minute details associated with normally accepted electrical construction, as described in applicable codes or as described in manufacturer's literature. Contractor shall provide all appurtenances normally associated with a particular equipment or device, and as required for a proper operating system. Some devices, equipment or materials may appear in only one location on the plans or in the specifications. Each and every item shown or described is to be included for this project. No exceptions. All required circuits and devices necessary for intended operation are to be included without additional cost to Owner. Where discrepancies occur between various plans or specifications for this project and where clarification is not requested by Contractor prior to bidding, the most stringent requirement shall be included in the Contractors bid price. Contractor shall review all specifications for all trade disciplines with electrical requirements prior to bidding and shall include most stringent and higher cost requirements in bid price.

No elements or requirements of the plans or specifications shall be omitted in Contractor's bid price unless specifically deleted in writing by Engineer. Failure to follow this specification requirement is at Contractor's expense and at no additional cost to Owner.

D. For water Motor Control Center (MCC) rooms, equipment structures, and other facilities, except office buildings and control rooms, install receptacles at 48 inches AFF. Install receptacles and light switches at ADA required heights.

E. Prior to bidding and during construction, Contractor shall coordinate with equipment vendors and suppliers and determine requirements for power, control and interconnection wiring and shall provide conduits and conductors accordingly for a complete operating system.

F. All electrical work shall be performed only by a Texas State Licensed Electrical Contractor, and as listed in Item 1.06 – "Contractor Qualifications" of this Section.

1.02 MAJOR ITEMS OF WORK AS FOLLOWS

A. All work shown on plans and described in specifications including as follows:

1. Installation of well solid-state reduced voltage starter.
2. Installation of lighting and receptacles.
3. Installation of pump motor feeders.
4. Installation of all other miscellaneous electrical systems, as shown on plans.

B. Contractors shall attend coordination meeting with Engineer to review construction methods, plans and specifications before starting work.

Prior to start of work, Contractor to provide schedule showing a phase of work, including completion, testing and require programming schedule as described in Item 3.08 – "Testing and Startup," of this specification.

1.03 PLANT CONTROL SYSTEM

A. The Contractor shall furnish and install a complete operating control system. The control system shall include but shall not be limited to all circuit breakers, motor starters, alternator, contactors, indicating lights, selector switches, surge protector, phase failure relays, programmable controllers, alarm light and horn, push buttons, control transformer, electronic devices, sensors, interlock wiring, control relays, blocks, snubbers, valves, nameplates, and all other associated items required to provide a workable system. All control circuits to be "fail-safe" type. All motor starters to have ETM, HOA, restart time delay relay, and Run light as a minimum.

All motor controls to have phase fail relay contacts to protect from single phasing. All blower controls to have low pressure alarm indicator per state requirements.

B. Provide circuit conductors, conduits, circuit breakers, and related devices for furnishing power to all motor heaters, instruments, devices, lights, controls, and all other motors and equipment indicated on plans or provided by Vendors or others for this project. Provide circuits and related devices per Code.

C. Control diagrams shown on plans are illustrative in nature and may require additional devices such as time delays, relays, and other devices required for the intended control functions.

D. All controls shall be fully tested in shop for proper and satisfactory operation, prior to installation at site. Contractor to provide written certification before delivery to site. Any installations without certification notice are done at risk by Contractor, who shall be obligated to make all necessary corrections in field at no additional cost to owner.

E. Where any equipment includes a Manufacturer furnished control panel the Equipment Vendor or Manufacturer shall be responsible for coordination of all interconnecting wiring at related devices.

F. Not Used

G. Not Used

H. Provide all software drivers for ModBus to ProfiBus conversion as required between various solidstate controllers or equipment.

I. All CT's to have load (burden) resistor for safety.

J. All control device settings are to be adjusted by Contractor for values recommended by the Plant Operator. Contact Engineer if clarifications needed.

1.04 SUBMITTALS

A. Submit all products covered under all sections for Engineer's approval. Any items not submitted are the total responsibility of the Contractor. If it is not submitted, it is not approved. Requirements of this section apply to all other electrical instrumentation and control related specifications for this project.

All submittal covers must have Electrical Engineer's project number and Prime Engineer's project number marked clearly on front of submittal. Electrical Contractor's name and contact information shall be included on submittal cover.

In addition, submittal cover shall have name, address, and telephone number of General Contractor, Electrical Subcontractor, Vendor or other Subcontractor making submittal, and the products local Manufacturer Representative. Submittals without this information are subject to rejection. Local Representative shall verify that equipment or materials submitted conform to the plans and specifications before shop drawings are submitted to Engineer. All shop drawings submitted that do not strictly comply with this section will be rejected and returned un-reviewed.

B. Where submittals for a particular equipment, device or material item vary from that specified or shown on plan drawings, and where that item is not specifically noted as acceptable and, where installation of submitted item results in improper or undesirable operation of the system, Contractor shall be liable for removal and/or replacement of that item with the item specified or shown on plan drawings at no additional cost to Owner. Such items submitted as substitutions shall be listed separately and clearly noted as "Substituted Item". Do not include Manufacturer's catalog data pages that do not apply to specific equipment or devices used for this project. Provide Table of Contents, Materials List, and data pages that are tabulated in an orderly manner that allow easy identification and purpose of equipment or devices.

C. Where various equipments interface or have wiring inter-connections, submittals for all of the equipment shall be made simultaneously.

For example MCC and controls, starters and motors, etc. Submittals for motors or starters not submitted together will not be reviewed. No sections, equipment or devices shall be omitted. This includes field wiring in ductbanks or conduit and local wiring. Submittals not complying shall be returned, unchecked, marked "Rejected".

D. Submittals of motor control and electronic device shop drawings will require a minimum of two (2) weeks for review from time of receipt by Electrical Engineer. Contractor shall submit all shop drawings in time to account for this period of review.

E. Provide hard copies of submittals only where required in general specifications, technical requirements and other specifications. Provide CAD files of all diagrams, equipment views, and material and device schedules on CD, or via email as arranged with Engineer. All submittals provided to the Electrical Engineer must be in electronic PDF or CAD format.

Electronic submittals shall be organized in a professional and understandable manner not simply a collection of individual cut-sheets. Hardcopies will not be reviewed and will be rejected. Any delays are the responsibility of the contractor.

F. With each submittal, include an electronic copy of the applicable specification(s) page(s) for the item submitted and mark "Complies" or "Non-Compliance" or "Exception" adjacent to the applicable paragraph. Identify applicable drawing sheet number and specification section on front of each submittal cover.

G. Contractor is fully responsible for coordinating/submitting correct operating voltage, horsepower, current, phase and starter sizes requirements of all equipment furnished and installed under this contract. Shop drawing review by Engineer does not remove this responsibility. Manufacturer's light fixture and accessories data sheets shall not confirm reference to "Contractor Select". Data sheets shall have model numbers that correctly identifies fixture and accessories as described and included on plans and in specifications. Incorrect submittal information is at risk of Contractor and at no additional cost to Owner.

H. All submittals for motor control centers, control panels, control sections, controllers, lift pump panels, and Vendor furnished panels must contain statement of U.L. certification and identifying name and number of U.L. certification for fabricating shop. All submittals without this information will be rejected. Any MCC's or panels installed without U.L. listing and where not acceptable by Engineer or Owner will be replaced at cost of Contractor.

I. Each submittal shall contain statement that all equipment for this project have been coordinated in respect to motor sizes, starter sizes, dimensional fit in spaces shown, equipment interfacing, conduit and conductor sizing, and interlock circuits. List each system and name of vendor for each system who was contacted for coordination.

J. General Contractor shall route all Vendor submittals with electrical requirements to Electrical Contractor who shall review and coordinate all power and control requirements and affix stamp certifying coordination. Any variation to plans or specifications shall be noted accordingly on Vendor's submittal.

K. All equipment shop drawings shall indicate changes or modifications as a result of previous submittal variances. No shop drawings shall be submitted that have not been coordinated as required by this specification. Any submittals not coordinated as such will be at Contractor's risk and at no additional cost to Owner for required changes necessary for a complete operating system as intended by the plans and specifications for this project.

L. Verify exact location of proposed service rack or pole before starting work. Verify coordination with Power Company and show location of Power Company transformer pole. Verify span length of service drop is within Power Company acceptable standard span distance. Do not drop over equipment, structures, driveways, or site.

M. Provide detailed sketch of all unistrut racks and other type mounting assemblies for Engineer's review before starting work. Items not submitted and not determined as acceptable after construction shall be replaced at no additional cost to Owner.

N. Provide detailed drawings of equipment, MCC's, transformers, and control panel layout in room or on area plan drawing. Show dimensions of device layouts on control panels. Show room or area dimensions, conduit stub-up locations, and all other dimensions relative to placement of equipment. All equipment shall fit available space shown on plans. Provide detailed drawings of any modifications, concrete cutting or breaking, or any work not shown on drawings for Engineer's approval. Non-submittal of any such work will result in corrective action at Contractor's expense. Special fabrication may be required for MCC's, control panels and other equipment. Note any exceptions or variations in size, location or configuration on submittal. Do not order equipment, MCC's, or panels until submittal has been approved by Engineer in writing. Where outdoor light poles and pull boxes are installed, provide dimensioned location layout submittal before starting work.

O. Where Equipment Manufacturers supply power and/or control cables, Contractor shall coordinate cable and conduit size and lengths. Failure to do so will be at Contractor's expense.

P. Wiring Diagram: Provide complete wiring diagrams and one-line diagrams for all motor control centers, control panels, controls sections, and related field wiring. Provide wire terminal and wiring tag numbers. Show all wiring as it will appear in final fabricated panels. Designate field wiring, local control panel wiring and motor control center wiring and show interface terminals. Field wiring shall not be connected directly to panel mounted devices. All connections shall be via an interface terminal strip. Show type of terminations. Forked lugs are not acceptable. Show one-line diagram for motor control centers and control panel.

Q. Component Layout:

1. Provide layout of each component installed inside control panel, motor control centers and related back plates. Show designation of each component and provide identification legend for each one. Provide cross-referencing to applicable data sheet and Table of Contents. List exact model number of each item. Note any substitutions.
   Show method of mounting. No components shall be located in panels that are not securely mounted.
2. Show method of covering or protecting live parts above 300 volts from accidental contact by service persons or operations. No adjustable devices that may normally be set by Operator shall be located near live parts over 300 volts without adequate protection.

R. Provide schedule of all adjustable control devices and settings for proper and safe operation of equipment and motors, especially time delay settings.

S. Any notifications or changes to contract plans and specifications shall be authorized by Engineer before submitting shop drawings for approval.

1.05 OPERATION AND MAINTENANCE (O&M) MANUALS

A. The Contractor shall provide one (1) complete hard copy of the O&M Manual and a copy in electronic format on CD, or via email for Engineer's review. Provide documents in latest version of Microsoft Word format. Hard copies of drawings are not acceptable and will be returned as rejected. Drawings shall be in latest version of AutoCAD format, or other type of CAD format as required by Project Engineer, or may be PDF where AutoCAD is not available. Cut sheets shall be PDF. In addition to "as-built" system drawings, the manuals shall include internal wiring diagrams and operating and maintenance literature for all components provided under this section.

The submitted literature shall be in sufficient detail to facilitate the operation, removal, installation, programming and configuration, adjustment, calibration, testing and maintenance of each component and/or instrument. Provide listing of all current control device settings, including operating levels and pressures, alarm settings, solid-state device settings, radio and modem addresses, PLC addresses, etc. Provide setting tables for all equipment. The O&M manual shall be professionally composed and compiled and shall not be an assembly of "cut-sheets". Engineer shall have sole discretion of acceptance of O&M manual contents and composition. Do not include Manufacturer's catalog data that does not apply to the specific equipment or devices used for this project. O&M Manual submittals will require a minimum of 2 weeks for review from time of receipt by Electrical Engineer. Contractor shall submit in time to account for this period of review.

B. The contents of the O&M manuals shall be generally organized as follows:

1. System Hardware/Installation
2. System Software (where applicable)
3. Operation (step-by-step procedures)
4. Electrical and Control Wiring Diagrams.
5. Maintenance and Troubleshooting
6. Warranty Certificates
7. Point–to–Point Wiring Diagrams for each and every circuit installed or provided by equipment suppliers.
8. Instrument and electronic devices calibration ranges and scales for this specific project. (Manufacturer's general information is not sufficient.

Include range of 4-20 mA signals, i.e., 4 mA = X psi or Y feet, etc. for each specific instrument and device.)

9. Setting and adjustments of all solid-state and non-solid-state starters, SCADA, PLC's, circuit breakers, controllers, instruments, and other equipment and devices with adjustable settings both manual and programmable settings. Provide this information in table format and show current settings of each and every adjustable device for this installation, in each motor control center section and each control panel.
10. Statement of satisfactory demonstration of all instruments, devices and equipment functions over full range of operation. (Any failures or incorrect calibrations or settings detected shall be reason to halt demonstration tests and reschedule after adjustments and recalibrations have been completed.)
11. Factory Technician report stating that all calibrations, settings and adjustments have been completed and that equipment has been functionally tested by Factory Technician on site.

    Where report is found to be inaccurate, the Technician shall make necessary on site adjustments and shall issue new report, and where second report is required a Factory Manager shall sign report attesting to its accuracy. There is no exception to this requirement. Contractor shall be responsible for all factory set up, testing and demonstration costs until system is accepted by the Design Engineer. Any additional testing as result of non-acceptance by Engineer shall be at Contractor's expense.
12. As-Built Drawings to include point to point wiring diagrams for every electrical device installed on this project.

C. Where Electrical and Instrumentation Equipment is to be installed under this contract or where existing and noted, the Contractor shall further provide a complete set of as-built plans, diagrams, parts and materials list, parts source, operational instructions, programming data, maintenance and trouble shooting instructions, service data, calibration data, testing data, required service and programming instruments and wiring diagrams sufficient for complete operation, service and programming and maintenance of the Electrical and Instrumentation Equipment by plant technicians and operators or by outside service technicians. This information shall be provided on CD in AutoCAD 14, or later version for drawings, and in Word format and shall be arranged in final order for insertion into Electrical and Instrumentation Equipment files.

Where AutoCAD drawings are not available, PDF files will be accepted. Coordinate overall layout and contents with Engineer and with Electrical and Instrumentation Equipment Programmer. Allow adequate person-hours for adjustment of layout and contents during Electrical and Instrumentation Equipment testing and Owner review.

All data submitted will be reviewed by Engineer for acceptance and where deemed insufficient by Engineer, data will be resubmitted at no additional cost to Owner.

D. As-Built Drawings:

1. Provide As-Built Drawings that clearly shows any work that varies from the Contract Drawings. Remove any lines or text from drawings that no longer apply as a result of as-installed variations. "As-Built" Drawings shall be on mylar backgrounds that are furnished by the Engineer. All changes are to be in latest version of AutoCAD or other applicable CAD methods as required by Owner or Engineer. Contact Engineer for CAD standards to be followed. Submit As-Built Drawings on CD for approval, or via email as approved by Engineer.
2. All underground conduits entering any building under slab shall be accurately dimensioned as to location. Show accurate layout of conduits under building slabs.
3. Show exact location of all conduits and ductbanks on site and on structures that are installed or modified under this contract. Identify conduits by tag number.
4. Show location and identify all new or relocated devices and equipment in rooms and on structures.
5. Provide accurate and complete point-to-point wiring diagrams for all power, control and instrument circuits. Identify each conductor, conduit, terminal block, and device terminal. Use manufactures device terminal numbers and do not assign new conflicting termination numbers. Quality and content of diagrams and drawings shall be such that future troubleshooting or modifications may be done without additional information from field observations. Contractor will be asked to demonstrate certain circuits selected by Engineer or Owner to assure accuracy and completeness of diagrams. Any errors shall be corrected before acceptance of work. This work includes every circuit installed or modified under this contract, without exception.
6. As-Built construction drawings shall be provided on full size plan sheets for Owner and furnished electronically in Autocad format for Owner and Electrical Engineers files. Provide hard copy quantities specified in this specification or in General Conditions Specifications, whichever is more stringent.

   Wiring diagrams shall be on same size pages (8.5x11 or 11x17 pullout sheets) as used in Operations and Maintenance Manuals and shall be placed in a separate section of the Manuals identified as Wiring Diagrams.

Each O&M Manual hard copy shall include a CD that contains the complete, organized O&M Manual in PDF format inserted in a pocket near front of Manual. All O&M Manuals shall be bound in high quality latching post vinyl binder. Loose page three ring binders are not allowed. Provide one (1) bound set of O&M Manuals and As-Builts for Owners files. Include CD.

1.06 CONTRACTOR QUALIFICATIONS

A. Contractor, Subcontractors, and Controls Vendors shall be experienced with all types of electrical systems covered under this contract. No work shall be undertaken where Contractor's firm, project supervisors and project electrical workers have not had recent experience in similar projects in area of project location. Electrical contractors, electricians, inspectors, installers, and programmers assigned to this project shall be full time qualified employees. Contract type employees are not allowed unless preapproved by Engineer. Contractor will be required to furnish proof of experience and employment where requested by Owner or Engineer or their Representatives. Pre-qualified Electrical Contractors are listed in Item 1.06, Paragraph E of this section.

B. Contractor's Project Manager or his Assistant shall be familiar with types of electrical construction required by this project in order to determine that all subcontractor and vendor's work is in conformance with the plans and specifications.

C. Electrical Contractor shall have Master Electrician License for City or County; in which project is located, and shall have a State issued Master Electrician License.

D. Contractor shall have an established safety-training program in effect for the duration of this project and will be required to submit proof of safety training for all employees working on this project.

E. The following Contractors are considered qualified and acceptable for electrical construction:

1. Pfeiffer & Son, Ltd.
2. W.W. Payton
3. SECO
4. McDonald Electric, Inc.
5. Systems, Inc.
6. Brothers Electric
7. Industrial Electrical Services (IES)
8. Electrical Automation Controls (EAC)
9. Boyer, Inc.

10. Resco Electric, Ltd.

1.07 CONTRACTOR'S RESPONSIBILITIES

A. Contractor shall review all sections of the plans and specifications for this project and shall note all electrical requirements for devices and equipment shown or implied, and shall provide service accordingly for a complete operating control system. Any discrepancies in Electrical or Mechanical requirements noted in various plans and specifications shall be brought to the attention of the Engineer prior to ordering equipment or materials or prior to starting construction related to the item in question. Coordination of all equipment and systems is Contractor's sole responsibility. Failure to coordinate all equipment requirements shall be the responsibility of the Contractor, at no additional cost to Owner.

B. Not Used

C. Contractor is specifically responsible for coordination of all electrical, mechanical, and process systems, devices and equipment provided or installed under this contract and shall assure that all requirements by all trades are met such as to insure a complete and operating electrical, control, process or instrumentation system. Special attention shall be given to coordination of motors supplied, MCC components supplied, mechanical systems supplied, horsepower and voltage and phase requirements of each. Where motor horsepower varies from plans, Contractor shall adjust circuit and control devices accordingly.

This includes verification of compatibility of all interfacing connectors and devices at new, existing, and Owner furnished equipment. Notify Engineer of any discrepancies before ordering equipment. Failure to do so may result in additional cost to Contractor.

D. Contractor shall assure that all systems have been properly installed, adjusted and tested prior to final inspection and shall notify Engineer at time electrical installation is ready for final inspection and testing. Unless Engineer has been duly notified in writing that certain equipments are not ready for final testing and such is acceptable with Engineer, additional final inspections and testing will be at Contractor's expense and at no additional cost to Owner.

E. Contractor shall fully inspect all motors and nameplates, controls, conduit, wiring devices and other items before starting work, ordering materials, or submitting shop drawings in order to verify existing conditions are as shown on plans and, shall immediately notify Engineer of any discrepancies between plans and specifications and existing conditions.

Failure to do so may result in Contractor's responsibility for any required changes in construction. This includes verification of compatibility of all interfacing connectors and devices for new, existing, and Owner or Contractor furnished equipment. Notify Engineer of any discrepancies before ordering equipment. Where available review "As-Built" drawings before bidding where existing conditions are unknown. Where available refer to "As-Built" drawings during construction of this project. Note that "As-Built" drawings may not be available in which case Contractor is required to determine wiring connections and device types as part of this contract.

Where Manufacturer's delivered motor size varies from design size shown on one-line diagram or, described in specifications, Contractor shall provide conductors, conduits, and all motor control devices sized for the delivered motor size at no additional cost to Owner. Where motor current transducers are required for use by Manufacturer control panels, Contractor to provide current transducers and conductors sized by Control Panel Manufacturer at no additional cost to Owner.

F. At completion of project and before final inspection, Contractor shall provide the Electrical Engineer with full size prints, redlined to reflect the "As-Built" electrical installation. Any variation from plans shall be shown on each applicable plan sheet. In addition, provide completed As-Built drawings in AutoCAD format for Engineer's records. As-Built drawings are to be in accurate detail of finished work, including dimensioning of all underground conduits enter under building slab.

G. When work involving modifications or additions to existing plant will interrupt normal service, Contractor shall make provisions for continuous electrical service thru Contractor furnished standby generator power.

Where a standby generator exists but will be temporarily out of service during construction, Contractor shall provide substitute generator power for duration of outage. In no event shall plant be without operating power or, without standby generator service. Include all transfer switches, fuel tank, fuel, attendance and appurtenances required for a complete power system as needed for interim plant operation. Where work disrupts power and/or control to new or existing equipment, furnish temporary bypass circuits, as required, to maintain equipment operation.

H. Where power outage is required, it shall be coordinated with Operator and Engineer. An outage shall not exceed 4 hours. Contractor shall plan work and provide equipment as required to maintain electrical power to facilities.

I. Where work involves additions, modification, demolition, or renovations to existing facilities, Contractor shall remove, relocate, and extend existing installations to accommodate new construction. This includes relocation of conduits, equipment and materials that may obstruct placement of new equipment. Existing spare conduits and equipment may not be located at exact place shown on plans. Relocations and adjustments up to 40 feet are required as part of this contract. Where spare buried conduits are to be reused, conduits shall be cleaned out of all debris before use.

It further includes extension or modification of existing circuits that are related to work covered under this project. Route all existing alarms to autodialer, alarm panel, and PLC where available. Include all conduit and wiring.

Extend all existing power and control circuits as required for proper operation of electrical systems. This includes extension of pump cables and instrument cables, which may require in-place splicing. Contractor shall field observe existing conditions prior to submitting a bid to become familiar with existing conditions and shall account for any relocations or extensions in bid. Refer to "As-Built" drawings and existing O&M Manuals. Failure to do so is at Contractors' risk and at no additional cost to Owner.

J. Provide electrical circuits to all equipment as required by manufacturer. Verify location and characteristics of all equipment shown on plans and in specifications and size circuits accordingly. All conductors and conduits to comply with NEC Article 250 and Article 310. All terminations to vendor furnished control panels shall be done by Contractor, unless specifically noted otherwise on plans or in specific specification sections. All panel calibrations and adjustments shall be done by Vendors Representative. When preparing bid or when performing work, observe all plan sheets for vendor furnished equipment and provide all required interface wiring between various panels and/or equipment necessary for a complete operating system. Provide electrical circuits to all equipment, devices, controls, controllers, and other items shown on plans, or described in specifications.

Provide circuit breaker, conductor, local disconnects, and connections to equipment in compliance with National Electrical Code. All circuits may not be shown on plans and must be verified and installed accordingly.

K. Equipment, instruments, controllers, conduits, and related appurtenances are shown in approximate locations. Contractor shall field select optimum location and where necessary, relocate up to 40 feet from location shown on plans to accommodate installation, at no additional cost to Owner.

L. Where circuit problems such as irregular power conditions, breaker trips, relay trips, controls failure, etc. develop during construction or prior to or within the 1 year warranty period, Contractor shall furnish a multi-channel recording device with all appurtenances for a total period of 60 days per event and, shall include setup and data retrieval. Work shall be performed when requested by Engineer and shall be at no additional cost to Owner. These conditions also apply to electrical problems during construction where operations of the plant are affected.

M. Where any equipment performance does not conform to specifications or, where in Engineers opinion, parameters are out of tolerance or erratic in performance, the Contractor shall remove and replace equipment at no additional cost to Owner.

N. Location of outlets and equipment shown on Drawings is approximate. Field verify exact location. Minor modification in location of outlets and equipment is considered incidental up to distance of 40 feet with no additional compensation.

O. Where training is required by any specification sections, Contractor shall provide training manuals for Operators. Manuals shall be approved as substantial quality by Engineer. All training manuals must be pre-approved by Engineer. Instructors shall be pre-approved by Engineer as qualified for training. Provide a training manual for each Trainee attending class. Training manuals and approved O&M Manuals shall be used during training.

P. Provide fail and problem alarms for controls and Manufacturer's equipment. Provide circuits, relays, and programming. Route all existing alarms to PLC where work involves modification or additions to existing equipment.

Q. Contractor shall provide the equipment necessary for locating all underground pipes, conduits, and structures before digging. All locations of intersection shall be properly staked and identified. Locating all underground lines is the sole responsibility of the Contractor and shall be at no additional cost to Owner. Any damage to underground lines is the responsibility of the Contractor.

Where obstructions are present in existing spare underground conduits to be used in this project, use video camera to determine cause of obstruction and contact Engineer for directions on how to proceed.

R. Review all plans prior to bidding and during construction and provide power and control requirements for all valve actuators and Manufacturer furnished panels according to the Engineer's specifications and plans for all equipment. This further includes all starters, breakers, controls, conductors, conduits, interface wiring, and devices for a complete electrical system.

S. Refer to contract plans and provide local disconnect switches for all motors, heaters, motor operated valves, fans and electrical equipment required for this project per National Electric Code. (Applicable where shown on plans.)

T. Contractor shall coordinate all conduit stub-ups into equipment. Any mis-located conduits shall be relocated at Contractor's expense and at no additional cost to Owner.

U. Change orders submitted by Contractor shall include a full technical explanation of request and shall contain statement confirming that Contractor has reviewed all plans and specifications and that all work was coordinated with other trades.

V. All equipment, devices and other items shown or indicated on plans and described in specifications are to be provided, furnished and installed by the Contractor unless, specifically and clearly marked or noted as "N.I.C." (Not in Contract). Failure to include all items is at Contractor's expense and at no additional cost to Owner.

W. Contractor shall be responsible for maintaining and adjusting all equipment for safe, damage free operation where equipment must be operated by Owner during construction. This especially pertains to existing equipment and controls that may be modified under this contract but are required to be operated by Owner. All valves, motors, and controls shall be properly locked out in a safe position to prevent inadvertent damage by Owner during the course of operating the plant. Contractor shall notify Owner in writing of any equipment that cannot be safely operated.

X. All requirements for instrumentation and control equipment shall be reviewed by Manufacturer's Representative prior to shop drawing submittal and, Engineer shall be notified in writing when installation and application indicated on plans may not result in satisfactory and/or accurate operation of equipment specified. Failure to abide by this requirement is at Contractor's risk and expense.

Y. Provide time delay relays on all motor starters and set at staggered intervals for starting motors sequentially up to largest motor last. This function may optionally be performed by the PLC where shown on plans. COH SCADA will provide a list of timers and where the timers should be located.

Z. Motors:

1. Motor Voltage: All three phase motors to be wound for dual voltage 240/480 or 208/480. Single phase motors to be 120/240 or 120/208 volts. This includes all submersible motors except well motors.

2. Testing:

   a. Before connecting motor to power source, meg test each conductor and motor. Record results for Engineer's review.
   b. After energizing motor, measure load current of each phase leg. Record measurements for Engineer's review.
   c. Verify measurements are acceptable before energizing motor.

AA. All signals up to point of PLC terminals shall be tested by Contractor and acknowledged in writing to Engineer prior to installation or testing of programs.

BB. All underground conduit routing on site plan shall be followed as close as practical. Do not route conduits diagonally across property unless clearly shown as such or, with Engineer's written approval. Any conduits added or changed shall be indicated to Engineer on marked up drawing and submitted for approval. Any unauthorized changes shall be corrected at Contractor's expense, regardless of time discovered by Engineer and, in which case existing concrete shall not be cut or damaged but, shall be replaced in its entirety as shown on the plans as new construction. Do not route underground conduits in conflict with structures or obstructions. Allow in bid for relocation of underground conduits up to 20 feet to avoid obstructions shown on all other drawings issued under this contract. Coordinate prior to installation of conduits.

CC. Cabinet and Enclosures Heights: Cabinet, panel and enclosure fasteners heights shall not exceed 6 feet from floor or grade to top fastening devices to allow access by Operator without use of ladders or steps to open enclosure doors. See Item 2.01 – "Materials" for display screen and readout heights.

DD. Provide diagrams of all controls panels and MCC's in clear plastic laminated pages. One (1) copy in ring binder for Operator and one (1) copy in pocket affixed to inside of cabinet door.

EE. A state licensed Electrician shall be present at all scheduled inspections. No Exceptions.

FF. Contractor shall contact the local Factory Representative and verify all equipment, instruments, and devices provided conform to the requirements of this project. Failure to do so may result in equipment removal and replacement at Contractor's expense. See Item 1.04 – "Submittals" of this specification section for submittal information.

GG. Provide all required wire adapters for oversized feeder conductors at panels, switches, breakers, and other equipment.

HH. Where outdoor conduit top entry to enclosures, provide CSBE seals at top of conduits to avoid water entry. This applies to service bus weatherhead entries and other applications.

II. Alarm reporting devices such as automatic telephone dialers shall never be disabled once installed and put in operation or, where already installed at existing facilities. Test autodialer at end of each workday during construction period.

JJ. Methods of work and devices described in all electrical specification sections are intended to facilitate a properly constructed and operating electrical system that meets Owner's operational requirements and satisfies the requirements of local and national codes.

The Electrical Engineer may approve methods or devices that vary from the requirements described in any particular specification if, in the Engineer's judgment, the installation meets the intent of the Engineer's design and, where the electrical system performance meets the general requirements of the facility operation and, where the installation is deemed to present a safe installation that does not present a danger to persons operating or maintaining the electrical installation. This variance may be authorized during the submittal or inspection stage of the project, as the Engineer deems appropriate.

KK. All equipment, conduits, panels, and devices shall be installed in the most strict, professional manner to present a neat installation. Where a question arises concerning intent of method for installation or where details are not clear, Contractor is to contact Engineer for clarification before proceeding with work. Any work not suitable or not installed in a professional manner will be modified to an installation acceptable to Engineer and Owner at no additional cost.

LL. Provide arc flash warning tags on all electrical equipment where required by NFPA 70E. Submit arc flash analysis for Engineers review.

MM. All motors, motor control centers, and all other electrical equipment shall be stored in a climate-controlled area prior to installation. Space heaters in motors and equipment shall be energized while stored.

After installation space heaters shall be energized at all times. Contractor is liable for any corrosive damage and any defective equipment.

Where Contractor fails to protect electrical equipment before and after installation on site and where excessive dust is observed inside the enclosure, Contractor shall have a factory warranty service technician clean, inspect and test unit, after which factory shall issue a written and signed statement that full factory is in effect. There are no exceptions to this requirement except to replace entire unit at Engineer's request.

NN. Provide block and bleed valves on all altitude valves and similar hydraulically controlled valves that have electrical solenoids, limit switches, position transmitters, or similar electrical devices.

OO. All MCC's, control panels, and equipment shall be fabricated to fit available space shown on plans. This includes Code clearances.

PP. Any equipment, devices, or software shown or indicated on Contract Documents as required for this project, and that may be overlooked by Owner or Engineer on submittals or at Final Acceptance inspection, shall still be provided by Contractor at no cost to Owner regardless of period of time that expires before Owner requests to be furnished and installed.

QQ. Do not cut or break existing or new concrete foundations, pads, sidewalks or slabs without specific direction from Engineer. Submit detailed drawing of intended work concrete damage, breaking or cutting will result in entire concrete replacement at Contractor's expense. This includes any materials replacement and excavation resulting from said damage or work.

RR. Conduits shall not be routed on exterior walls of buildings unless specifically shown on Plans, or pre-approved in writing. Where approved, conduits shall be painted to match wall color.

SS. Conduits shall not be connected directly to vibrating equipment or motors. Flex connections shall be used.

TT. All control panels shall have over current protection or disconnect switch for power feeders.

PART 2 P R O D U C T S

2.01 MATERIALS

A. All materials provided under all sections of the specifications shall be new and the standard products of manufacturers regularly engaged in the production of such equipment. Motor control centers, control panels, and all similar equipment shall be manufactured by a firm located within 200 miles of the project facility or, firm shall have an established full time service and repair facility located within 200 miles of project facility. Final assembly of motor control centers and control panels shall be performed at these local facilities. All materials shall conform to the National Electrical Code and shall be approved by Engineer and listed by the Underwriters' Laboratories. Materials described by manufacturer's name and catalog number are selected to set a definite standard of design and quality to be required.

There is not any intention to discriminate against a product of another manufacturer, which is equally durable in construction, similar in design, and will serve the purpose for which it is intended. All equipment, hardware, materials, motors, towers, masts, brackets, or accessories shall be installed in strict accordance with Manufacturer's instructions. Contractor shall contact Manufacturer's designated local Representative for confirmation of exact model, options, configuration and services that are to be included in bid cost. Manufacturer's Representative shall make all critical adjustments to electronic modules and controls. Where plans, details, or specifications indicate instructions that are contrary to Manufacturer's instructions, consult with Engineer before ordering or installing. Failure to follow the requirements of this paragraph is at Contractor's expense and at no additional cost to Owner.

Within 30 days after award of the contract and before any materials and equipment are placed on order, the Contractor shall submit shop drawings to the Engineer for approval per Item 1.04 – "Submittals."

B. Materials and equipment specifications are general in coverage and may contain reference to construction items that apply in only particular situations and may not apply as a general rule for materials installed on this project. Listing of acceptable Equipment Manufacturers does not limit or remove the intent of any specification sections included for this project. Provide all required accessories required by Equipment or Materials Manufacturer for proper installation. Failure to do so is at Contractor's expense. Store all electrical equipment on job site in humidity-controlled spaces. Provide means of heating to avoid moisture build-up, and provide moisture sealed protective covering. Any equipment not properly stored may be rejected at Engineers discretion.

C. All equipment and devices shall be installed according to manufacturer's instructions. Coordinate installation with manufacturer's representative to assure correct installation methods have been applied.

Prior to submittal review, Manufacturer's Representative shall review plans and specifications and shall notify Engineer in writing where application shown on plans will not provide satisfactory and/or accurate performance.

Failure to abide by this requirement shall be at Contractor's risk and cost. All equipment and materials shall be rated for the harsh Industrial, Electrical, and Mechanical environment in which installed and shall be warranted by manufacturer accordingly. This includes all enclosures located in wastewater and water facilities, including all outdoor control panels, breaker panels, switches, junction boxes, and similar electrical equipment at other facilities which shall be NEMA 4X 316 stainless steel without exception. This requirement is paramount to all other drawings or specification requirements unless specifically noted or, unless approved otherwise by Engineer in writing.

D. Outdoor equipment shall not have exposed devices or controls, unless specifically called for on plans. The outer door shall cover all such items. No see thru windows are allowed unless specifically approved. All outer doors to have locking hasp and door restraint to hold door open at 90 degrees position. Keyed handles for indoor panels are only acceptable where specifically approved. All NEMA 4X equipment enclosure doors to have three (3) point latching handle and locking hasp. NEMA 4X splice box enclosures shall have quick release latches. Plexiglas inner or outer doors are not acceptable.

E. All instruments and electronic equipment installed outdoors or in unconditioned spaces shall have means of cooling to allow satisfactory operation in local environment and at conditions required by equipment manufacturer's specification. All motor starters over 100 horsepower shall have forced fan cooling in the starter section. All outdoor enclosures are to have sufficient forced fan cooling. Provide rain hood, intake louvers, insect screens, and fan motor circuits with t-stat and on/off controls.

F. All control panels and motor control centers that are not standard manufacture, off the shelf products shall be manufactured in accordance with Plans and Specifications with high quality materials and components, bear a UL listed label, and be constructed by a UL listed shop. Manufacturer shall have local manufacturing and/or repair facility within 200 miles and have local Service Technician that can provide prompt service when required by Owner. Equipment Manufacturers who fabricate own panels may provide control panels for this project. Control panels will be fabricated accordingly to plans and Specifications. However, no outsourced panels are allowed except for Control Panel Manufacturers listed below. This requirement will be strictly enforced. No exceptions. Service Technicians shall have detailed knowledge of control panels specific to this project. There are no exceptions to the requirements of this paragraph. The following Manufacturers are acceptable:

1. Weimar Manufacturing Co.
2. B.L. Technology, Inc.
3. W.W. Payton
4. Ace Controls
5. Texas Industrial Controls Manufacturing (TICM)
6. Systems, Inc.
7. Control Panel Manufacturers listed in other Specification Sections.

G. All pressure switches and transmitters on pump discharge lines are to have "snubbers" sized to produce hydraulic delay required for satisfactory operation of controls.

H. Substitution items may be acceptable where deemed by Engineer to be of equal type, service, value, or suitable for a particular application. The Engineer reserves the right of decision on all substitutions unless specifications state, "no substitutions allowed".

I. Equipment ratings shown on plans are the "minimum" acceptable sizes. All Equipment Manufacturer's products may not be available in the exact rating shown, in which case next greater available size shall be provided.

J. All control panels and MCC's shall have single piece door with door-mounted devices mounted directly to door. Plexiglas plates are not acceptable.

Auxiliary mounting plates shall not be used to mount devices to door. All panels must be fabricated in a neat and professional manner. Metalwork shall be performed with proper commercially available tools, with no hacksaw or nibbler cuts allowed.

K. All transmitter displays to be in actual unit values and not percent scale.

L. Door-mounted, rotating operating mechanisms for circuit breakers are not allowed for MCC's or control panels.

M. All components inside enclosures shall be fastened down with proper hardware. All cables shall be bundled and bound with waxed cord or nylon tie-wraps manufactured for that purpose. Adhesive tie down blocks are not allowed. Provide threaded press-in or welded studs for nylon cable clamps as required. All work shall be done in a neat and professional manner.

N. All control panels and MCC's shall have 120 VAC GFI duplex receptacles with low voltage circuit inside controls section for test equipment use. Control section shall have interior lighting.

O. For combination starter units provide interlocks so disconnect means must be in "Off" position before door can be opened and so door cannot be closed with disconnect means in "On" position, except by consciously operating permissive release device. Rotating type operators located outside of door are not acceptable.

P. Provide block and bleed valves on all altitude valves and similar hydraulically controlled valves that have any electrical devices installed.

Q. Provide pressure switch in all well discharge lines and provide time delayed interlock circuit to inhibit pump and initiate alarm in event safe pressure is exceeded. Provide reset button and alarm light. Route alarms to ATD or SCADA. Interface with solid-state controller.

R. All gauges, instruments, transmitters, and meters to read 75% of scale at system maximum rated parameters such as voltage, amp, pressure, level, and flow.

S. All controls circuits for Multilins, solidstate starters, and all such products wired into a panel assembled by a panel fabricating shop or system integration shop shall be reviewed and approved by the Product Manufacturer's Representative. Contractor and Supplier shall allow for any additional cost associated with this review and approval process and shall certify such approval has been issued at time shop drawings are submitted.

T. CT's for power monitor device, controller input or other instrument inputs shall be sized to detect peak inrush current motor.

U. Where unprotected service conductors are routed through a pull box with other conductors a divider wall shall be provided in the pull box for separation as required by the NEC. Do not route unprotected (overcurrent) service conductors through pull boxes, per Power Company standards.

V. All panels, equipment enclosures, and motor control centers to have 120-volt space heater and t-stat.

W. All solidstate controllers shall have 24 hour UPS (under full load).

X. All electrical devices attached to or, normally a standard part of an equipment item shall be provided by that Equipment Manufacturer. For example, limit switches, solenoids, and transducers for flow control valves are to be provided by the Flow Control Valve Manufacturer. This is to be coordinated by the General Contractor and the Electrical Subcontractor.

Y. All underground manholes and pull boxes to have cable racks and grounding. Cables and conductors are to be neatly dressed on racks around perimeter walls and properly secured to racks and tagged. Provide ample slack in cables and conductors. No splicing will be allowed where there is not enough slack to route cables and conductors around perimeter and, new ones will be installed at no additional cost to Owner.

Z. All equipment installed on this project shall incorporate all devices and features to protect that equipment from the influence of other equipment, line voltage and phase irregularities, harmonics and other disturbances that may effect the proper and safe operation of that equipment whether these required features are a standard component of that equipment as an off-the-line product. No equipment shall be installed without these features.

AA. Use Schedule 80 PVC conduits, boxes and fittings in all chemical areas. Provide seals where conduits leave area.

BB. All equipment installed shall include all DC power supplies operated from a 120-volt circuit. No equipment shall be battery powered only unless required by the specifications. Include all cabling and other components necessary for a complete operating system. Where firmware, software, or programming is required for operation satisfactory to Engineer, it shall be included accordingly.

CC. All equipment and devices shall be NEMA rated. IEC rated equipment and devices are not acceptable.

DD. All requirements for instruments and electrical equipment shown on electrical plans or described in electrical specifications shall be coordinated through the local Manufacturer's Representative to assure equipment meets the requirements for this project. All such items shall be purchased through local Distributors or sales offices located within 200 miles of this project. In any case, the local Factory Representative shall be consulted for exact requirements – no exceptions. This is to assure local service for Owner when needed on a 24-hour basis. Any items furnished that do not meet this requirement will be replaced at expense of Contractor.

EE. All indoor surface mounted circuit breaker panels to be NEMA 12 with painted steel housing unless shown otherwise on plans. Use NEMA 4X stainless steel enclosures in wastewater facility buildings and all outdoor locations.

FF. All electrical work shall be performed in a neat and orderly manner. Any work that does not appear as professional workmanship shall be corrected or replaced, at Engineers discretion.

GG. All slabs around electrical equipment shall be constructed and sloped to avoid any standing water.

HH. Where equipment model numbers are shown on plans or specifications, provide most current model or version.

II. All display screens or readouts shall be mounted in MCC or panel with top of screen at height of 60 inches above or level where Operator stands. This must be accounted for where panels or MCC sections are installed on concrete pads or other elevated structures. Display screens or readouts shall not be lower than 40 inches above level where Operator stands.

JJ. Measure spaces for enclosures and equipment and verify fit before submitting, ordering, or constructing installation.

KK. Where devices with RS-485 outputs are installed, provide an RS-485 to Ethernet converter with associated power supply.

LL. For rehab or expansion work on controls, provide additional new panduit wireways. Do not overfill Panduit on new or rehab projects.

MM. All electronic controllers, instruments, and devices furnished by any Vendor or Manufacturer shall have an ethernet data port and means for status monitoring and control interface with the plant PLC controller. Vendor to provide all programs, software, and I/O addresses.

NN. Install GFI receptacles for receptacles in wet areas, pump rooms and all outdoor locations. Provide W.P. covers.

OO. All service and feeder breakers to be electronic type with adjustable trips.

PP. All service and feeder conductors to be XHHW-2.

QQ. All analog instrument outputs to be 4-20 mA unless noted otherwise on Plans. Coordinate scaling with Engineer.

RR. Provide complete power, control and instrumentation circuits for motor breakers, RTDs, temperature sensors, instruments and control devices.

SS. All well motor starters to have start time delay relay.

TT. Where standard MCC controls section shown on Plans will not contain all devices on backplate, provide additional plate hinged to side of section wall for mounting additional devices. Space location to all clearance from devices on backplate.

UU. Contactor shall include minimum of four single pole, double throw spare auxiliary contacts rated at 20 amperes continuous, on each starter furnished.

VV. All equipment, instruments and devices provided for this project shall have means of protection from power line conditions such as surge, phase fail, or other line conditions that may damage equipment, instruments or devices furnished. It is vendors and manufacturers' responsibility to provide protective devices as required for maintaining warranty of furnished items and to assure no damage occurs from power line conditions.

WW. Provide lock out/sign out box at all new motor control centers on MCC rooms. Install wall mounted unit with hinged door and space for 16 safety locks and tags. Provide locks and tags, ten (10) each. Provide sign on door. Unit shall be Brady or equal quality Manufacturer.

XX. Listing of an acceptable Equipment Manufacturer does not limit or remove the intent or requirement of any specification section applicable for this project.

2.02 PLANS AND SPECIFICATIONS

A. Electrical plans and specifications are not intended to discriminate against any particular manufacturer. Specific values shown for a particular manufacturer's product may vary slightly for another product. Work required under this contract consists of each and every item, equipment, material and device shown on any of the Civil, Structural, Mechanical, Process, Electrical or other plan sheets contained in the contract documents and includes items shown in details, schedules, diagrams, sections or other means of illustration presented.

If any item is shown on a single sheet at any place, it is to be included under this contract unless specifically noted otherwise and, all piping, wiring, and connections for operation of the item shall be included at no additional cost to Owner. If there is any doubt or question, Contractor shall request a "clarification" from Engineer before bidding. The Electrical Engineer reserves the right to interpret the electrical specifications and to make judgment as to acceptance of a product, regardless of minute details in the specifications or on the plans.

B. Specifications shall be reviewed for applicability of materials under certain conditions and in certain environments and, where not shown otherwise on plan drawings, these application directions shall be adhered to.

C. Where a particular reference on drawing plans does not conform to standard acceptable construction methods for a particular type project, the Contractor shall immediately notify the Engineer and request a clarification before ordering materials or starting construction.

D. Plans are general in nature and may not show minute details of existing conditions or proposed work. Existing conditions may include undocumented buried pipes, conduits and structures that lie in the route, or at location, of equipment or conduit installation required for this project. These uncertainties shall be accounted for in the Contractors Bid. Contractor shall adjust conduit routes, equipment pads, and equipment mountings, as required, for a satisfactory installation for the conditions imposed and at no additional cost to the Owner.

E. Electrical site plan drawings shall only be scaled when "Scalable Drawing" appears on the drawing sheets.

F. All electrical equipment, controls, and devices used in this project shall have self-protection features that prevent damage of that equipment from overload, overvoltage, and undervoltage conditions. Any failures caused by lack of this provision shall be at full cost to Contractor and at no additional cost to Owner. Where Engineer determines this to be the case and where Contractor disagrees, Contractor shall provide full evidence of failure cause at their own expense.

G. All overcurrent protection devices for controls shall be circuit breakers. No fuses of any size are allowed, except for fast action or very high fault current ratings where shown on plans.

H. Where RGS conduit is installed on interior or exterior building walls (or ceilings), paint conduit, supports and clamps to match wall color.

PART 3 EXECUTION

3.01 WORKMANSHIP

A. All wiring shall be installed in accordance with current NEC and local codes. Field select routing of conduits to avoid underground piping, conduit or structures that may not be shown on plans.

B. All construction and equipment fabrication shall be of highest quality and installed in a professional manner. All devices shall be manufactured specifically for the purpose installed and shall be installed according to Manufacturer's recommendations.

C. Adjust route of electrical conduits and ductbanks below proposed or existing buried piping. Provide minimum 24-inch clearance vertically and horizontally. This work shall be performed in a satisfactory manner and at no additional cost to Owner.

D. A fish wire shall be left in all conduits in which the permanent wiring is not installed.

E. All fixtures, switch, and receptacle locations shall be approved by Engineer.

F. Refer to other sections of this specification for controls. Under this section of the specifications, the Contractor shall install the control devices and provide control wiring switches, outlet boxes, and shall make all final connections. Control wiring and interlocks shall conform to wiring diagrams furnished by equipment manufacturers.

G. Seal all conduits entering control panels and equipment enclosures with non-hardening silicon sealant (GE RTV.). Install EYS conduit bodies on all conduits entering chemical rooms, lift station wet well, corrosive environments, or U.G. facilities. Seal all conduits entering MCC's, control panel, and junction boxes with CSBE seals. Sealing glands shall be selected specifically for each conduit and conductor.

H. Where conduits are stubbed out from building for future use, extend conduits 5 feet past building wall or past edge of pavement, whichever is applicable. Do not leave under pavement. Cap ends of conduits.

I. Provide strain relief device at cable connection to submersible transducer. Relief device to have threaded connection to transducer.

J. Where electrical equipment and MCC's submitted does not fit location shown on plans, Contractor shall adjust locations of other equipment as required for total installation to fit available space. Otherwise, submit only equipment that is specifically fabricated to fit space shown on plans.

K. All devices, fittings, connectors, supports, brackets, and miscellaneous hardware normally used for installation of electrical equipment may not be shown in detail. Contractor shall provide all these items and included them in bid price.

L. Coordinate location of motor terminal box to match location of conduit stub up, drop or connection on same side of motor.

M. Where equipment, devices, or installation fails or is damaged during construction said equipment and/or devices shall be replaced with new unit. Repair is not an acceptable remedy unless specifically approved by Engineer and/or Owner.

N. Provide 48 inches minimum workspace in front of electrical equipment.

O. Provide a minimum of 8 inches between all wall or rack mounted enclosure boxes, switches, or equipment. Do not extend past edge of building wall and maintain 6 inches from edge of wall.

P. Paint all conduits mounted on walls or ceilings to match wall or ceiling color. Coordinate with Engineer for exceptions before painting.

Q. Do not use nylon or plastic tie wraps or straps for attaching or supporting seal-tight or cables to conduits or structures. Use aluminum straps made for that purpose.

3.02 AS-BUILT DRAWINGS

A. As-Built Electrical Drawings: Contractor shall maintain complete set of original legibly marked up drawings showing all deviations from contract drawings. In addition, after mark-ups have been approved, provide one (1) set of AutoCAD as-built drawings on CD for Engineer's records. This shall include conduit routing and sizes, wire sizes, detail changes, diagram changes, conductor routing, wiring terminations, etc. As built drawings are to be maintained on site during construction and changes shall be marked as work progresses. Markup shall be in red pencil on black line or blue line plan sheets.

Plans shall be available for Engineer and/or Owner's review during the course of construction. When work is complete, transfer all changes and data from field drawings to CAD drawings in latest release AutoCAD format. Contact Engineer for base AutoCAD files. Follow layering and other format already being used for base files. Include requirements of the following paragraph on an additional drawing sheet.

As-built drawings shall contain a conduit/conductor schedule that lists all point-to-point wiring that shows origination, destination, conductor quantity and size, and each wire tag number. This list shall include all wiring not specifically shown in O&M manuals, or any Vendor supplied drawings. The intent is to make certain each and every conductor is identified. Coordinate identification of originating terminals and destination terminals shown in O&M manuals and other drawings to assure accuracy. As-built drawings will be required for use during final inspection and testing in order to verify accuracy and completeness. Provide for Engineer's review at least 1 week prior to final inspection.

3.03 ELECTRICAL SYSTEM ACCEPTANCE

A. System acceptance upon Substantial Completion shall be defined as that point in time when the following requirements have been fulfilled:

1. When as-built drawings and wiring diagrams have been submitted, reviewed, and approved in writing by Engineer. As-built CAD drawings shall be submitted to Engineer in electronic AutoCAD files prior to final inspection.
2. All O&M documentation has been submitted, reviewed, and approved.
3. The complete electrical system has been fully inspected and has successfully been started up, tested and accepted by the Engineer.

    a. Complete electrical system shall be demonstrated to be fully functional. Every alarm function shall be exercised.
    b. Complete electrical system shall run continuously for a period of ninety (90) consecutive days without failure. In event of failure, repairs shall be made and test period started over again.
    c. There are no "Substantial Completions" for electrical systems that cannot demonstrate satisfactory performance of its intended function.

4. All Owners' staff personnel training programs have been completed.
5. Owner/Engineer sign a document indicating electrical installation has formally been accepted.
6. Warranty certificates for electrical equipment have been properly submitted.
7. All spare parts have been delivered to Owner.

8. All punch list items have been corrected, acknowledged by Contractor in writing and accepted by Engineer.
9. Contractor shall have equipment vendors available for installation, setup, testing, demonstration and commissioning activities as required by other specifications section. Vendors shall allow ample time for these on-site services in their bids.

3.04 EXCAVATION AND BACKFILL

A. All underground conduits shall be buried to a minimum depth of 24-inches below finished grade. All trenches shall be uniform width and shall be backfilled and compacted to 95 percent that of original density. Any damage to underground conduits caused by other Contractor's shall be repaired by this Contractor and shall be compensated accordingly by the party or parties responsible for the damage. Concrete shall be poured evenly on all sides of ductbanks. Do not over pour and do not dump spoils on site.

B. Do not cut paved driveways, sidewalks, etc. Bore under such construction, maintaining a minimum of 24 inches below the underside of the pavement or concrete.

C. All underground duct banks require inspection prior to concrete pour and inspection prior to covering the concrete. Contact the Inspector, or if not available, contact the Engineer for inspections.

Schedule minimum 48 hours in advance. Any duct banks not inspected will be required to be exposed for inspection by Engineer regardless of status of concrete slabs or foundations.

3.05 CLEAN UP

A. The Contractor shall upon completion of the work, remove all materials, empty containers, and any other materials that are not incorporated into the work.

B. Concrete spoils shall not be dumped on site without approval by Engineer or Owner.

3.06 WARRANTY

A. Contractor shall provide full 3-year service warranty on the overall installation, and shall include all labor and materials required to repair or replace equipment and/or components that are defective or malfunctioning. Included under this warranty shall be all equipment, devices, hardware, and software. This warranty shall begin at date of written final acceptance of electrical systems and shall include both labor and materials at no additional cost to owner.

There are no exceptions to this requirement. Contractors warranty shall guarantee 24-hour service response time and shall provide whatever labor, work, or materials needed to maintain plant operation when replacement parts are on order. In no case shall plant electrical systems be out of service for over 24 hours from time Owner calls for warranty service. This shall be at no additional cost to Owner.

All materials and equipment installed shall have full warranty from manufacturer that guarantees equipment is rated for the harsh Industrial Electrical/Mechanical environment in which it is installed. Where manufacturer's products fail prematurely, manufacturer shall be fully responsible for new replacement and shall not have option of declaring that failures were caused by environment and its affect on the product. Contractor is fully responsible for assuring that product manufacturers are aware of this condition and that manufacturer's warranty statement is included in shop drawings. Failure to do so will be at full expense of Contractor and at no additional cost to Owner. Where warranty requirements are shown in other sections, the more stringent requirement shall have precedence.

B. All critical warranted repairs shall be made within 24 hours of receipt of required parts from Manufacturer with reasonable delivery time of overnight shipping. Any repairs not completed within five (5) working days from date of notice are subject to Owner making other arrangements for repair and backcharging Contractor. This requirement is a condition of this contract.

C. Where equipment or instrument problems remain unresolved by Contractor beyond a reasonable time, a Factory Technician shall be provided on-site to take any corrective actions necessary to put equipment or instruments in operating order. Owner and Engineer reserve the right to determine a reasonable time for corrective action by Contractor.

3.07 TRAINING

A. The Contractor shall provide services of his Technician and a factory trained Technician to instruct plant-operating personnel for a period of at least two (2) full days after completion of the contract work. Training requirements in specific specification sections shall have precedence over requirements of this section.

B. Provide Engineer with an outline of training course and topics to be covered.

C. Schedule with Owner two (2) weeks in advance. Where Operators must alternate training schedule, more than two (2) days may be required.

D. Operations and Maintenance (O&M) manuals and "As-Built" drawings shall be used during training.

E. Engineer may participate in training.

3.08 TESTING AND STARTUP

A. All elements of each electrical control system shall be set up, calibrated, and tested by Manufacturer's Technician to demonstrate that the total system satisfies all of the requirements of this Specification.

All special testing of materials and equipment shall be provided by the Contractor. The Contractor shall coordinate and schedule all of his testing and startup work with the Owner and Systems Integration Engineer. As a minimum, the testing shall include both a factory test and a field test. Testing requirements are as follows:

1. Factory Tests: The electrical controls, motor control centers, switchgear, instrumentation systems, and all other associated hardware shall be tested via a full simulation at the factory, prior to shipment, to demonstrate that each component is operational and meets the requirements of these specifications. Manufacturer shall provide test routine program for shop simulation of I/O signals where test are unavailable in shop.
   Where solid-state controller programs are furnished by a specified Systems Integration Programmer, a copy of the program shall be provided on CD for Manufacturer's use in factory testing.
   Test results shall be certified, with written documentation provided to the Engineer upon test completion. Factory testing of controls shall be witnessed by the Engineer and/or Programmer for all control systems containing a solidstate controller of any type.
   Control System Fabricator shall notify project Electrical Engineer a minimum of (6) six weeks in advance of shop testing, and shall confirm equipment will be ready for testing when arrival of Programmer and/or Engineer Prior to time of testing or during testing, a Program shall be downloaded to the controller by the Programmer or Engineer.
   Where testing facility is located, more than 100 miles from job site and where testing period goes past 6 p.m., Supplier shall provide suitable accommodations for overnight stay for Engineer and Programmer at cost of Supplier.
2. Field Tests: All electrical control system components and instruments shall be checked to verify that they have been installed properly, all terminations have been made correctly and signal parameters are accurate. This includes demonstration of accuracy or all instruments over entire range of operation by live simulation of measurement. Electronic simulation above is not acceptable.

Witnessed field tests shall be performed on the complete system. Prior to witnessed test, Contractor shall perform a complete test of each and every function, device operation and overall operations of electrical power, control, and instrumentation system. Any discrepancies or problems shall be corrected and then Contractor shall send a written notice that complete electrical control system is installed and operating per the Plans and Specifications.

Contractor shall provide a checklist for all electrical, control and instrumentation functions and send to Engineer for approval. Each function shall be demonstrated to the satisfaction of the Owner and Engineer on a paragraph-by-paragraph basis. Any equipment, devices or functions that are found not performing properly will be reason for termination of test until repairs are made. Additional testing by Engineer and Owner may be at Contractor's expense for time and travel of Engineer and Owner's staff. Each test shall be witnessed and signed off by the Contractor and the Engineer upon satisfactory completion. The equipment Manufacturer's Representative shall be present for all testing, setup, demonstrations, and training.

The Contractor shall notify the Owner at least two (2) weeks prior to the commencement date of the field tests. After tests are completed and with system fully operational, system shall run continuously for a period of 90 days without failure. Any failures shall be repaired and test shall start over again.

a. Additional Requirements:

1) Measure and record all motor in-rush, run current and terminal voltage at start and run testing. Where multiple motors are installed, test shall include all motor sequencing smallest to largest. Submit recorded values for Engineer's review. Provide instrument and electronic devices calibration ranges and scales for this specific project. (Manufacturer's general information is not sufficient. Include range of 4-20 mA signals, i.e., 4 mA = X psi or Y feet, etc. for each specific instrument and device.)
2) Provide setting and adjustments of all solid-state and non-solid-state starters, circuit breakers, controllers, instruments, and other equipment with adjustable settings both manual and programmable. Submit for Engineer's review and approval before operating equipment.
3) Provide statement of satisfactory demonstration of all instruments, devices and equipment functions over full range of operation.

(Any failures or incorrect calibrations or settings detected shall be reason to halt demonstration tests and reschedule after adjustments and recalibrations have been completed.)

4) Factory Technician report stating that all calibrations, settings and adjustments have been completed and that equipment has been functionally tested by Factory Technician on site.
(Where report is found to be inaccurate, the Technician shall make necessary on site adjustments and shall issue new report, and where second report is required, a Factory Manager shall sign report attesting to its accuracy. There is no exception to this requirement. Contractor shall be responsible for all factory set up, testing and demonstration costs until system is accepted by the Engineer. Any additional testing as result of non-acceptance by Engineer shall be at Contractor's expense.

5) As-Built Drawings (Point to point wiring diagrams for every electrical device installed on this project with tags and applicable schedules shall be available at time of testing. Lack of this requirement will result in cancellation of testing until complete documentation is available. This will allow checking of wiring accuracy at time of testing.)

3. A state licensed Electrician shall be present at all scheduled inspections.

END OF SECTION

SECTION 16060

ELECTRICAL DEMOLITION

PART 1 G E N E R A L

1.01 SECTION INCLUDES

A. Electrical demolition.

1.02 REFERENCES

A. Temporary wiring of systems to maintain operation of facilities while undergoing modifications and demolition shall be provided in accordance with:

1. American National Standards Institute/National Fire Protection Association (ANSI/NFPA), No. 70 - National Electrical Code (NEC), Article No. 305 - Temporary Wiring
2. City of Houston Electrical Code.

1.03 SUBMITTALS

A. Annotate existing drawings to sequence the demolition of systems, equipment removal and temporary hook-ups.

B. Schedule with Project Manager for required shut-downs to accommodate system demolition and installation of temporary facilities.

1.04 QUALITY ASSURANCE

A. Verify field measurements and circuiting arrangements are as shown on Drawings.

B. Verify that abandoned wiring and equipment serve only abandoned facilities.

C. Demolition drawings are based on casual field observation and existing record documents. Report discrepancies to City Engineer before disturbing existing installation.

D. By beginning demolition, installer accepts existing conditions and warrants that he will maintain service to equipment and items not scheduled or indicated for removal, and that he will return to the City all items and systems in good operating condition.

PART 2 PRODUCTS

2.01 MATERIALS AND EQUIPMENT

A. Materials and equipment for patching and extending work: As specified in individual Sections.

2.02 DESIGN AND CONSTRUCTION

A. The temporary electrical wiring and facilities shall be designed and constructed in strict compliance with NEC - Article No. 305 and the City of Houston Electrical Code.

PART 3 EXECUTION

3.01 PREPARATION

A. Disconnect electrical systems in walls, floors, and ceilings scheduled for removal.

B. Coordinate utility service outages with utility company to provide continuous service to operating equipment.

C. Provide temporary wiring and connections to maintain existing systems in service during construction. When work must be performed on energized equipment or circuits, notify City of Houston Utility Operations and get approval. Use personnel experienced in such operations.

D. Existing Electrical Service: Maintain existing system in service until new system is complete and ready for service. Disable system only to make switchovers and connections. Obtain permission from the City Engineer at least one week before partially or completely disabling system. Minimize outage duration.

E. Adding Load to Existing Electrical System: Perform a load analysis to assure that the existing power distribution system (MCC, service, conductors, panel, breakers, feeders, branch circuits, etc.) is not overloaded if additional load is added to existing equipment.

F. Existing electrical conduit and wire may not be reused to feed new equipment except by written authorization from the City of Houston.

3.02 DEMOLITION AND EXTENSION OF EXISTING ELECTRICAL WORK

A. Remove, relocate, and extend existing installations to accommodate new construction.

B. Remove abandoned wiring to source of supply.

C. Remove exposed abandoned conduit, including abandoned conduit above accessible ceiling finishes. This includes all associated support and anchoring systems. Cut conduit flush with walls and floors, and patch surfaces.

D. Disconnect abandoned outlets and remove devices. Remove abandoned outlets if conduit servicing them is abandoned and removed. Provide blank cover for abandoned outlets which are not removed.

E. Disconnect and remove abandoned panelboards and distribution equipment.

F. Disconnect and remove electrical devices and equipment serving utilization equipment that has been removed.

G. Repair adjacent construction and finishes damaged during demolition and extension work.

H. Maintain access to existing installations which remain active. Modify installation or provide access panel as appropriate.

I. Extend existing installations using materials and methods as specified for new work.

3.03 DISPOSAL AND SALVAGE

A. Salvage electrical and instrumentation equipment and wiring size four and larger removed from existing facilities for City's reuse.

B. Material and equipment which can be reused or salvaged remains the property of the City of Houston. Equipment to be retained by the City of Houston shall be delivered to a specified location by the Contractor.

C. Materials and equipment which cannot be reused or salvaged will be removed and disposed by the Contractor.

3.04 CLEANING AND REPAIR

A. Clean and repair existing materials and equipment which remain or are to be reused.

B. Panelboards: Clean exposed surfaces and check tightness of electrical connections. Replace damaged circuit breakers and provide closure plates for vacant positions. Provide typed circuit directory showing revised circuiting arrangement.

3.05 INSTALLATION

A. Install relocated materials and equipment under the provisions of Section 02220 - Demolition.

B. Electrical installations and materials shall conform to the current issue of the following standard and codes: American National Standards Institute/National Fire Protection Association (ANSI/NFPA), No. 70 - National Electrical Code (NEC), City of Houston Electrical Code, and material and workmanship.

C. All material shall be free of defects and in safe working condition which will meet electrical classification and functional requirements.

D. Testing shall be made during the course of construction or at the completion of the job. These tests shall be made by the electrical contractor. The contractor shall furnish all test equipment.

E. The job will not be complete until work has been inspected and trial start up has been successfully completed.

END OF SECTION

SECTION 16111

CONDUIT, FITTINGS, AND BODIES

PART 1 G E N E R A L

1.01 SECTION INCLUDES

A. Conduit, fittings, and bodies.

1.02 REFERENCES

A. American National Standards Institute (ANSI):

1. ANSI C 80.1 - Rigid Steel Conduit - Zinc Coated.
2. ANSI C 80.4 - Fittings for Rigid Metal Conduit.

B. Federal Specifications:

1. W-C-58 C - Conduit Outlet Boxes, Bodies Aluminum and Malleable Iron.
2. W-C-1094 - Conduit and Conduit Fittings Plastic, Rigid.
3. WW-C-566 C - Flexible Metal Conduit.
4. WW-C-581 D - Coatings on Steel Conduit.

C. National Electrical Manufacturers Association (NEMA):

1. NEMA RN 1 - Polyvinyl-Chloride Externally Coated Galvanized Rigid Steel Conduit and Electrical Metallic Tubing.
2. NEMA TC 2 - Electrical Plastic Tubing (EPT) and Conduit (EPC-40 and EPC-80).
3. NEMA TC 3 - PVC Fittings for Use with Rigid PVC Conduit and Tubing.

D. National Fire Protection Association (NFPA), ANSI/NFPA 70 - National Electrical Code (NEC).

E. Underwriters' Laboratories (UL):

1. UL 1 - Flexible Metal Electrical Conduit.
2. UL 6 - Rigid Metal Electrical Conduit.
3. UL 514 B - Fittings for Conduit and Outlet Boxes.
4. UL 651 - Schedule 80 Rigid PVC Conduit.
5. UL 651 A - Type EB and A Rigid PVC Conduit and HDPE Conduit.

6. UL 886 - Electrical Outlet Boxes and Fittings for Use in Hazardous Locations.

F. City of Houston Electrical Code.

1.03 SUBMITTALS

A. Make submittals following Section 01330 - Submittal Procedures:

1. Manufacturer's cut sheets, catalog data.
2. Installation, terminating and splicing procedure.
3. Instruction for handling and storage.
4. Dimensions and weight of products.
5. Code compliance certificate.
6. Conformance certificate.

1.04 QUALITY ASSURANCE

A. Rigid steel conduit shall pass the bending, ductility, and thickness of zinc coating tests described by ANSI C 80.1.

B. Flexible conduit shall pass the tension, flexibility, impact, and zinc coating test described by UL 1.

C. Nonmetallic conduit and fittings shall pass the test requirements of NEMA TC 2, UL 651 and 651 A and Federal Specification W-C-1094 A.

1.05 DELIVERY STORAGE AND HANDLING

A. Package conduit in 10-foot bundles maximum with conduit and coupling thread protectors suitable for indoor and outdoor storage. Package fittings in manufacturer's standard quantities and packaging suitable for indoor storage. Package plastic-lcoated rigid conduit, fittings, and bodies in such a manner as to protect the coating from damage during shipment and storage.

B. Store conduit above ground on racks to prevent corrosion and entrance of debris.

C. Protect plastic conduit from sunlight.

PART 2 P R O D U C T S

2.01 ACCEPTABLE MANUFACTURERS

A. Rigid Steel Conduit:

1. Allied Tube and Conduit.
2. Triangle Wire and Cable, Inc.
3. Wheatland Tube Company.

B. PVC Coated Steel Conduit:

1. Occidental Coating Company (O-Cal Blue).
2. Robroy Industries, Inc.

   a. Rob-Roy Red
   b. Plasti-Bond Red
   c. Perma-Cote Green

C. PVC Rigid Conduit:

1. Cantex.
2. Carlon Industries, Inc.

D. Conduit Fittings and Bodies:

1. Appleton Electric.
2. Crouse-Hinds.
3. Killark Electric Manufacturing Company.
4. O-Z/Gedney.

E. Liquidtight Flexible Conduit:

1. Anamet, Inc.
2. Electriflex Company.
3. Triangle Wire and Cable, Inc.

2.02 MATERIALS AND EQUIPMENT

A. Design Conditions. Use electrical conduit, fittings, and bodies designed for service in areas as specified in Section 16010 - Basic Electrical Requirements and this section to form a continuous support system for power, control, and instrument cables or any combination thereof.

B. Conduit and Fittings:

1. Rigid Steel Conduit and Fittings.

   a. Rigid steel conduit and rigid steel conduit bends, nipples, and bodies shall be hot-dipped galvanized and shall comply with the latest ANSI C 80.1, UL 6, Federal Specification WW-C-581 D, and NEC Article 346-15.
   b. Mild steel tubing shall be used for conduit, nipples, and couplings, and shall be free of defects on both the inner and outer surfaces.
   c. Fittings and bodies and covers for rigid steel conduit shall be steel or cast-iron and shall comply with ANSI C 80.4, UL 514 B, and Federal Specification W-C-58 C.

2. PVC-Coated Rigid Steel Conduit and Fittings

   a. PVC-coated conduit, fittings, bodies, and covers shall conform to NEMA RN 1 (Type A). Rigid steel galvanized conduit and fittings shall conform to Federal Specifications WW-C-581 D and ANSI C 80.1. PVC-coated rigid metal conduit must be UL listed with PVC as the primary corrosion protection. Conduit bodies shall conform to UL 514 B and Federal Specification W-C-58 C. PVC-coated fittings for general service locations must be UL listed with the PVC as the primary corrosion protection. Provide sufficient coating for touch-up after installation.
   b. PVC-coated couplings shall be of the ribbed type.
   c. Condulet covers shall have encapsulated stainless steel thumb screws.
   d. Condulets and covers shall be of malleable iron or ferroalloy material before coating.
   e. Urethane coating shall be a minimum of 2 mil thickness on the interior of the conduit and the interior of fittings, condulets, covers, and bodies.

3. Liquidtight Flexible Metal Conduit and Fittings

   a. Use liquidtight flexible metal conduit manufactured in accordance with UL 1 and Federal specification WW-C-566 C.
   b. Fittings used with liquidtight flexible metal conduit shall be the PVC-coated type. Thoroughly ground the conduit to the fittings and through the fittings to the box or enclosure to which it is attached.

c. Couplings and fittings for use in hazardous areas shall comply with UL 886, NEC Article 501-4 (a&b), and Federal Specification W-C-586 C.

4. PVC Conduit and Fittings. Use PVC conduit, bends, and fittings, which comply with NEMA TC 2, W-C-A, and NBC Article 347-17 for above ground and underground installation. Conduit shall be Schedule 80.

PART 3 E X E C U T I O N

3.01 PREPARATION

A. Ensure that the conduit system to be installed is sized properly for the cable and wire requirements.

B. Verify the actual physical conduit route from the conduit plan drawings and prepare the conduit support system.

C. Verify the equipment locations to which the conduit will be connected and determine detail requirements for connections.

3.02 INSTALLATION

A. Install PVC-coated conduits in all outdoor locations, inside valve vaults and wet wells, lift station drypits, areas that are not air-conditioned, and in all other corrosive and wet environments. Install PVC-coated conduit in strict accordance with manufacturer's instructions. Use installers certified by the manufacturer.

B. Install rigid galvanized steel (RGS) conduits in dry, inside, air-conditioned locations only.

C. Install PVC conduits in reinforced duct banks or encased in concrete slabs. For stub-ups, use PVC coated rigid steel elbows as required in Section 16402.

D. Run exposed conduit parallel or perpendicular to walls, ceilings or main structural members. Group multiple conduits together where possible. Conduit shall not interfere with the use of passageways, doorways, overhead cranes, monorails, equipment removal areas or working areas. In no case shall conduit routing present a safety hazard, trip hazard, or interfere with normal plant operating and maintenance procedures.

A minimum overhead clearance of 8 feet shall be maintained in passageways. All conduits installed across walkways shall have concrete or aluminum trip plates installed.

E. Installation and support of conduit shall be from steel or concrete structures in accordance with the standard detail drawings. Furnish necessary conduit straps, clamps, fittings and support for the conduit in accordance with the standard details.

F. Identify conduit at termination points like MCC, light fixtures, control panels, receptacles, panels, and junction boxes.

G. Not more than 3 equivalent 90 degree bends will be permitted between outlets. Provide bonded expansion fittings at building expansion joints.

H. Install conduit runs so that they are mechanically secure, mechanically protected from physical harm, electrically continuous, and neat in appearance. The interiors of conduit shall provide clean, smooth raceways through which conductors may be drawn without damage to the insulation. Make threaded connections wrench tight.

I. Cut conduit square with a power saw or a rotary type conduit cutter designed to leave a flat face. Do not use plumbing pipe cutters for cutting conduit. Ream the cut ends of conduit with a reamer, designed for the purpose to eliminate rough edges and burrs. Threads shall be cut with standard conduit dies providing 3/4-inch taper per foot, allowing the proper length so that joints and terminals may be made up tight and the ends of the conduit not deformed. Keep dies sharp and use a good quality threading oil continuously during the threading operation. Remove metal cuttings and oil from the conduit ends after the threads are cut and paint threads before connections are made. Use non-corrosive Carbozinc No. 11 as manufactured by the Carboline Company, coal tar enamel or zinc rich epoxy primer on the threads of steel conduit before connections are made.

J. Use strap wrenches only to tighten joints in plastic coated rigid steel conduit. Replace all conduit and fittings with damage to the plastic coating, such as cuts, nicks and threader chuck jaw marks. Use a solvent, or the same patching material to seal around the edges of conduit fitting covers.

K. Make changes in direction of conduit using elbows or fittings. Do not use pull boxes to make direction changes unless specifically designated otherwise.

L. Field fabricated bends shall be free of indentations or elliptical sections. The radius of the bend shall not be less than 6 times the smallest diameter of the raceway.

M. Protect all conduit terminations from mechanical injury. Prevent the entry of moisture and foreign matter into the conduit system by properly capping terminations.

N. Avoid trapped runs of conduit, if possible. When they are necessary, provide drainage using a "tee" condulet equipped with a drain. Conduit is likely to pass through areas with a temperature differential of 20 F or more. Seal penetrations with a proper seal fitting at the wall or barrier between such areas. For conduit passing through walls separating pressurized areas from non-pressurized areas, install sealing fittings at the wall on the non-pressurized side.

O. Fit all conduit crossing building or structure expansion joints with approved expansion fittings, except that fittings will not be required when conduit crossing an expansion joint is supported on trapeze hangers in such a way that at no time will the conduit be under stress due to expansion. Unless otherwise indicated on Drawings, install expansion fittings every 300 feet within a straight conduit run and where conduit crosses building expansion joints, using bonding straps to ensure ground continuity. Bonding strap connections shall be protected by minimum 40 mils PVC coating.

P. Where rigid galvanized conduit terminates in sheet metal enclosures, fit the conduit with double locknuts and bushings. Sheet metal enclosures made of stainless steel or aluminum located outside or in any other wet, damp, or corrosive areas shall be furnished with PVC-coated threaded hubs. Restrict side penetrations to the lower one third of the enclosure. Where PVC-coated rigid conduit is used, PVC-coated rigid threaded hubs will be used.

Q. Provide flexible Liquidtight metallic conduit where necessary to allow for movement or to localize sound or vibration, at transformers, at motors and any other rotating equipment. Flexible metal conduit shall be used as fixture whips only.

R. Seal all openings or holes where conduits pass through walls or floors. When passing through a firewall or floor, use a fire-rated seal per the typical detail included in the Drawings. Certain walls, as indicated on the drawings, require environmental (air-tight) seals; seal as indicated on the Drawings.

S. Install explosion-proof seals in conduit runs crossing or entering a hazardous classified area (as shown on Drawings). Install type CSBE removable sealing fittings to seal pump cables between wet well and first junction box. If a junction box is not used, install the CSBE seals at the wet well and the control panel.

T. All transitions in PVC-coated conduit size shall be accomplished with PVC-coated RECs or manufactured reducing condulets. RE bushings shall not be used.

U. Parallel runs of conduit may be supported by structural steel racks. When two or more racks are arranged one above the other, provide vertical separation of not less than 12 inches between racks, unless otherwise indicated on Drawings. Space conduits on the racks at least enough to provide 1/4-inch clearance between hubs on adjacent conduits at terminations and to allow room for fittings.

V. Fill conduit racks no more than 75 percent of their capacity, providing usable space for future conduit. To ensure this, conduits leaving the rack horizontally shall be offset up or down so that future conduits may be installed in the space remaining. Construct conduit racks to permit access for wire or cable pulling at all pull points, even when future conduits are added to fill the racks.

W. Where conduit racks are supported on rods from beam clamps or by some other non-rigid suspension system, install rigid supports at no more than 50-foot intervals to give lateral stability to the rack.

X. Conduit racks or hangers must in no way interfere with machinery (or its operation), piping, structural members, process equipment, or access to anticipated future equipment. Refer to architectural, structural, equipment layout and piping drawings to ensure that this requirement is met.

Label high voltage conduit with the circuit phase-to-phase voltage by means of a firmly attached tag or label of approved design at each conduit termination, on each side of walls or barriers pierced and at intervals not exceeding 200 feet along the entire length of the conduit.

Y. Support conduit sizes 2 inches and larger at spacings not exceeding 10 feet and conduit sizes 1-1/2 inches and smaller at spacings not exceeding 8 feet.

Z. The means of fastening conduit to supports shall be: by one hole malleable iron conduit straps secured by wood screws to wood and by bolts with expansion anchors to concrete or masonry; by "Korn" clamps or U-bolts to other surfaces. Use "clamp backs" when strapping conduits to walls, column faces, or other such surfaces.

AA. Support conduit runs with conduit clamps, hangers, straps and metal framing channel attached to structural steel members. Conduits of 1-1/2 inch size or less may be supported by one-hole conduit straps on concrete, tile or steel work, but for larger size conduit, 2-hole straps shall be used. Use clamps of galvanized malleable iron for rigid galvanized conduit and stainless steel for PVC-coated conduit. Metal framing channel straps used for PVC-coated conduit shall be type 316 stainless steel.

BB. Install conduits supported form building walls with at least 1/4-inch clearance from the wall to prevent the accumulation of dirt and moisture behind conduit.

CC. All Conduits embedded in concrete lift station deck shall be PVC-coated rigid.

END OF SECTION

SECTION 16120

600-VOLT CONTROL CABLE

PART 1 G E N E R A L

1.01 SECTION INCLUDES

A. 600-volt control cable.

1.02 REFERENCES

A. American Society for Testing and Materials (ASTM):

1. ASTM B 3 - Soft or Annealed Copper Wires.
2. ASTM B 8 - Concentric-Lay-Stranded Copper Conductors, Hard, Medium Hard, Soft.
3. ASTM B 33 - Tinned Soft or Annealed Copper Wire for Electrical Purposes.
4. ASTM B 174 - Bunch-stranded Copper Conductors for Electrical Conductors.

B. Institute of Electrical and Electronics Engineers (IEEE), IEEE 383-2.5: IEEE Standard for Type Test of Class IE Electric Cables, Field Splices, and Connections for Nuclear Power Generating Stations.

C. Insulated Cable Engineers Association (ICEA):

1. ICEA S-61-402 - Thermoplastic-Insulated Wire and Cable for the Transmission and Distribution of Electrical Energy (NEMA WC-5).
2. ICEA S-66-524 - Cross-Linked-Thermosetting-Polyethylene-Insulated Wire and Cable for the Transmission and Distribution of Electrical Energy (NEMA WC-7).
3. ICEA S-68-516 - Ethylene-Propylene-Rubber-Insulated Wire and Cable for the Transmission and Distribution of Electrical Energy (NEMA WC-8).

D. Underwriters' Laboratories (UL):

1. UL 44 - Rubber Insulated Wires and Cables.
2. UL 83 - Thermoplastic Insulated Wire and Cables.

E. American National Standards Institute/National Fire Protection Association (ANSI/NFPA), No. 70 - National Electrical Code (NEC) , Chapter No.3 - Wiring Methods and Materials, Article 725 - Class 1, Class 2, and Class 3 Remote Control, Signaling, and Power-Limited Circuits.

1.03 SUBMITTALS

A. Make submittals following Section 01330 - Submittal Procedures.

1. Completed engineer's data sheets.
2. Completed manufacturer's data sheets.
3. Manufacturer's cut sheets, catalog data.
4. Installation, terminating and splicing procedure.
5. Instruction for handling and storage.
6. Dimensions and weight.
7. Conformance certificate.

1.04 QUALITY ASSURANCE

A. Tests.

1. Cable shall be tested at the factory to confirm that the cable complies with requirements of Part 6 of ICEA S-61-402, S-66-524 or S-68-516. Refer to data sheet for additional test requirements.
2. Where applicable, the cable shall meet the requirements of the vertical tray flame test as described in IEEE 383-2.5.

1.05 DELIVERY STORAGE AND HANDLING

A. Ship cable on manufacturer's standard reel sizes, unless otherwise specified. Where cut lengths are specified, mark reel footage accordingly. Each reel shall contain one continuous length of cable. Reels shall be of the type specified on the data sheets. Provide impact protection by wood lagging or suitable barrier across the traverse of the reel. Provide moisture protection by manufacturer's standard procedure or heat shrinkable self-sealing end caps applied to both ends of the cable.

PART 2 PRODUCTS

2.01 ACCEPTABLE MANUFACTURERS

A. Alpha Wire Corporation

B. Belden Division, Cooper Industries, Inc.

C. Cablec Continental Cables Company

D. General Cable Company

E. Manhattan Electric Cable Corporation

F. Okonite Company

2.02 MATERIALS AND EQUIPMENT

A. Design. Provide cable with the following design characteristics. The cable shall consist of multiple conductors. The cable assembly shall be UL listed, flame, oil and sunlight resistant, and certified for continuous operation at the temperature specified on the 600-Volt Control Cable Data Sheets in wet or dry locations while installed in underground duct, conduit, or cable tray. The number and size of conductors supplied in each cable shall correspond to the quantities specified on the 600-Volt Control Cable Data Sheets.

B. Conductors. Provide conductors which are concentric or bunch-stranded, annealed tinned copper with physical and electrical properties conforming to ASTM B 3, ASTM B 8 or ASTM B 33 or ASTM B 174 and Part 3 of ICEA S-61-402, S-66-524, or S-68-516 unless otherwise specified on the 600-Volt Control Cable Data Sheets.

C. Insulation. Each conductor shall be insulated as specified on the 600-Volt Control Cable Data Sheets complying to the requirements of Part 3 of ICEA S-61-402, S-66-524 or S-68-516. The average insulation thickness shall not be less than the dimensions shown in Section 3.2, Table 3-1 of ICEA S-61-402, S-66-524 or S-68-516 for 600 volt insulation unless otherwise specified on the 600-Volt Control Cable Data Sheets. The minimum insulation thickness shall not be less than 90 percent of the value given in the table.

D. Drain Wire. Provide drain wire Class B, seven-stranded, tin-coated copper in accordance with ASTM B 3, ASTM B 8, or ASTM B 33 and as specified on the 600-Volt Control Cable Data Sheets.

E. Shielding. Cable shielding shall consist of laminated, nonburning, mylar-backed aluminum tape applied helically around conductors with the aluminum side in continuous contact with the drain wire unless otherwise specified on the 600-Volt Control Cable Data Sheet. The tape shall be wrapped around the conductors with a 25 percent minimum overlap unless otherwise specified on the 600-Volt Control Cable Data Sheets.

F. Jacket.

1. When control cables are to be enclosed in conduit, ducts or in other raceway systems, the cables shall be of the non-metallic type and shall be covered by an overall nonmetallic jacket, as specified on the 600-Volt Control Cable Data Sheets, which complies with the requirements of Section 4.4 of ICEA S-66-524 or S-68-516, Section 4.3 of ICEA S-61-402, or Table 21-5 of Part 21 of UL 83.
2. Multi-conductor cables shall have a jacket thickness which complies with Table 4-7 of Part 4 of ICEA S-66-524, Table 4-5 of Part 4 of ICEA S-68-524, or Table 4-6 of Part 4 of ICEA S-61-402 unless otherwise specified on the 600-Volt Control Cable Data Sheets.

G. Armor. Where control cables are to be exposed, as in cable tray, cable channel or other cable support systems, the cables shall be protected by an interlocked metal tape armor made of galvanized steel which meets the requirements of paragraph 4.5 of ICEA S-68-516 or S-66-524 unless otherwise specified on the 600-Volt Control Cable Data Sheets. An over-all jacket shall be provided as specified in the Data Sheets.

H. Conductor Identification. Identify individual conductors by method as specified on the 600-Volt Control Cable Data Sheets in conformance with Appendix L of ICEA S-66-524, Part 5 of ICEA S-68-516, or Appendix I of ICEA S-61-402.

I. Cable Marking. Print cable marking information on the jacket of each cable at 2-foot intervals. Use a permanent printing method with a color sharply contrasting the jacket color. See the 600-Volt Control Cable Data Sheets for the minimum information required.

PART 3 EXECUTION

3.01 PREPARATION

A. When control wiring requires installation in cable tray and other cable support systems, use the 600-Volt Multiconductor Control Cable.

B. Complete cable raceway systems, underground duct banks, and cable support systems before installing cables.

C. Verify sizing of raceways and pullboxes to ensure proper accommodation for the cables.

D. Check the length of the cable raceway system against the length of cable on the selected reel.

E. Do not install or work on PVC insulated or jacketed cables in temperatures below 32 F.

F. Clean conduits of all foreign matter before cables are pulled in.

G. Provide at least 30 percent spare conductors.

3.02 INSTALLATION

A. Cable in Conduit and Ductbank.

1. Install cables in accordance with the manufacturer's instructions and the National Electrical Code (NEC), Article 725 - Class 1, Class 2, and Class 3 Remote Control, Signaling and Power Limited Circuits. Do not exceed maximum wire tension, maximum insulation pressure and minimum bending radius.
2. Pull cables into conduits using wire pulling compounds approved by cable manufacturers to reduce friction. Lubricants must not be harmful to the conductor insulation or cable jacket. Mixtures containing soap or detergent shall not be used.

B. Cable in Tray

1. Install armored cable in cable tray.
2. 600-Volt Control Cable may be installed in cable tray with 600-volt power cables.
3. Install cables in trays in a neat and orderly manner. Tie cables to the rungs at approximate 15-foot intervals by use of cable ties.

C. Termination

1. Do not splice conductors unless approved by the Project Manager. For termination use crimp-on type, ring tongue, non-insulated, tin-plated copper lugs.

2. Mark wiring on both ends with circuit numbers or loop tag numbers. Heat shrink wire markers after the ring tongue terminal has been installed. Extend the marker over the crimp-on base of the terminal.

D. Tests

1. Test insulation integrity and conductor continuity before connecting the cables.
2. Use a 500 VDC megohmmeter and perform the cable insulation test in accordance with the operating instructions.

E. Termination. After the 600-volt control cable has been tested with satisfactory results, terminate the cable at both ends to designated terminal points.

END OF SECTION

DATA SHEET 1 of 3

IDENTIFICATION

CLIENT _____ MANUFACTURER _____
PROJECT _____ MODEL NO. _____
JOB NO. _____ SIZE _____
PLANT LOCATION _____ SERIAL NO. _____
ITEM NO. _____ INQUIRY NO _____
SERVICE _____ P.O. NO. _____
NO. ITEMS REQUIRED _____

NOTE: [ ] INDICATES INFORMATION TO BE COMPLETED BY MANUFACTURER

OPERATING DATA

VOLTAGE _____ FREQUENCY _____ AMBIENT TEMP (°C) _____
INSTALLATION ENVIRONMENT _____

CONSTRUCTION

CONDUCTORS

SIZE (AWG or KCMIL): _____
ARRANGEMENT: _____ SINGLE CONDUCTOR __ OTHER _____
_____ MULTI-CONDUCTOR _____ NO. OF CONDUCTORS
MATERIAL: _____ BARE COPPER _____ TIN-COATED COPPER
_____ SOLID _____ STRANDED
SINGLE CONDUCTOR: _____ JACKETED _____ NON-JACKETED
MULTI-CONDUCTOR _____ JACKETED _____ NON-JACKETED (TRIPLEXED ONLY)
_____ ARMORED _____ ARMORED W/OUTER JACKET
_____ GROUND WIRES IN INTERSTICES: _____ COPPER _____ ALUMINUM
CONDUCTOR CLASS PER _____ ASTM STANDARD
SPECIAL REQUIREMENTS: _____

INSULATION

TYPE: _____ CROSS LINKED POLYETHYLENE _____ CHLOROSULFONATED POLYETHYLENE
_____ POLYVINYL CHLORIDE _____ ETHYLENE-PROPYLENE RUBBER
_____ POLYETHYLENE _____ OTHER _____
THICKNESS (MILS OR MM) _____
COLOR: _____
TEMPERATURE RATING: _____ 60°C - 75°C (WET-DRY) _____ 75°C - 90°C (WET-DRY)
_____ 90°C (WET-DRY) _____ OTHER _____
DRAIN WIRE: SIZE _____ STRANDED ___ SOLID _ BARE COPPER _____ TIN-COATED COPPER
SPECIAL REQUIREMENTS: _____

SHIELDING

TYPE SHIELDING: _____ BRAIDED _____ CONDUCTIVE PLASTIC
_____ CONDUCTIVE COTTON _____ SPIRAL-SERVED _____ CORRUGATED
_____ MYLAR FILM - ALUMINUM FOIL _____ POLYESTER FILM-ALUMINUM FOIL
_____ COPPER TAPE _____ OTHER _____
POLYESTER FILM-ALUMINUM LOCATION _____ INSIDE _____ OUTSIDE
_____ PAIR SHIELD ISOLATED
_____ SEPARATOR _____ FILLED

ITEM NO. _____

DATA SHEET 2 of 3

SHIELD COMBINATION

OVERSHIELD: _____ POLYESTER FILM ALUMINUM
_____ BRAID _____ SERVED _____ OTHER _____

BRAID SHIELD: _____ TYPE STRANDS _____% COVERAGE _____ TINNED
_____ BARE _ COPPER _____ ALUMINUM
_____ OTHER _____

OVERALL TYPE: _____ POLYESTER _____ PAPER OTHER: _____

JACKET

TYPE: _____ POLYVINYL CHLORIDE _____ POLYETHYLENE
_____ HEAVY DUTY NEOPRENE _____ CHLOROSULFONATED POLYETHYLENE
_____ NYLON _____ OTHER _____

THICKNESS (MILS OR MM) _____
COLOR: _____ BLACK _____ OTHER _____
SPECIAL REQUIREMENTS: _____

ARMORING

TYPE: _____ INTERLOCKED (POSITIVE) _____ OTHER _____
MATERIAL: _____ GALVANIZED STEEL _____ ALUMINUM
_____ OTHER _____
COVERING: _____ POLYVINYL CHLORIDE _____ OTHER _____
COLOR: _____ BLACK _____ OTHER _____
SPECIAL REQUIREMENTS: _____

MARKING

CONDUCTOR IDENTIFICATION

SINGLE CONDUCTOR: _____
MULTI-CONDUCTOR: _____

CABLE MARKING

REQUIRED: _____ MANUFACTURER _____ CONDUCTOR SIZE
_____ NO. OF CONDUCTORS _____ VOLTAGE RATING
_____ UL LABEL _____ NEC TYPE
_____ TEMPERATURE RATING _____ MONTH/YEAR OF MANUFACTURE
_____ INSULATION _____ FOOTAGE MARKERS
_____ OTHER _____

FACTORY TESTING/DOCUMENTATION

_____ PHYSICAL _____ _____ FLAME TESTS (PER IEEE 383 - 2.5)
_____
_____ ELECTRICAL _____ OTHER TESTS _____
_____ MEGGER
_____ OTHER _____

ITEM NO._____

DATA SHEET 3 of 3

QUALITY ASSURANCE

_____ NO ADDITIONAL REQUIREMENTS _____ ATTACHED SPECIFICATION _____

PACKAGING

_____ DOMESTIC _____ EXPORT

SHIPPING

REEL TYPE: _____ RETURNABLE _ NON-RETURNABLE _____ LENGTH PER REEL _____

ADDITIONAL REQUIREMENTS: _____

[ ]MANUFACTURER DATA

CABLE DIMENSION (O.D. IN.) _____ SHIPPING TIME _____
CABLE CROSS-SECTIONAL AREA _____ OTHER _____
CABLE WEIGHT (LBS/FT) _____
CABLE MIN BENDING RADIUS _____
TENSILE STRENGTH _____
GROSS WEIGHT/REEL (LBS) _____
TOTAL CUBIC FEET/REEL _____
SHORT CIRCUIT WITHSTAND CURVES _____
CABLE TESTING REQUIREMENTS _____

NOTES

ITEM NO. _____

SECTION 16126

INSTRUMENTATION CABLE

PART 1 G E N E R A L

1.01 SECTION INCLUDES

A. Specifications for instrumentation cable.

1.02 REFERENCES

A. American Society for Testing and Materials (ASTM).

1. ASTM B3: Soft or Annealed Copper Wires.
2. ASTM B8: Concentric-Lay-Stranded Copper Conductors, Hard, Medium Hard, Soft.
3. ASTM B33: Tinned Soft or Annealed Copper Wire for Electrical Purposes.

B. Institute of Electrical and Electronics Engineers (IEEE), IEEE 383-2.5: IEEE Standard for Type Test of Class IE Electric Cables, Field Splices, and Connections for Nuclear Power Generating Stations.

C. Insulated Cable Engineers Association (ICEA).

1. ICEA S-61-402: Thermoplastic-Insulated Wire and Cable for the Transmission and Distribution of Electrical Energy (NEMA WC-5).

2. ICEA S-66-524: Cross-Linked-Thermosetting-Polyethylene-Insulated Wire and Cable for the Transmission and Distribution of Electrical Energy (NEMA WC-7).
3. ICEA S-68-516: Ethylene-Propylene-Rubber-Insulated Wire and Cable for the Transmission and Distribution of Electrical Energy (NEMA WC-8).

D. Underwriters' Laboratories (UL).

1. UL 44: Rubber Insulated Wires and Cables.
2. UL 83: Thermoplastic Insulated Wire and Cables.

E. American National Standards Institute/National Fire Protection Association (ANSI/NFPA), NFPA No. 70 - National Electrical Code (NEC), Chapter No. 3 - Wiring Methods and Materials, Article 725 - Class 1, Class 2, and Class 3 Remote Control, Signaling, and Power-Limited Circuits.

1.03 SUBMITTALS

A. Submit the following under the provisions of Section 01330 – Submittal Procedures:

1. Completed engineer's data sheets from this specification or manufacturer's data sheets, cut sheets, and catalog data.
2. Installation, terminating and splicing procedure (including bending radius and pulling tension data).
3. Instruction for handling and storage.
4. Dimensions and weight.

1.04 QUALITY ASSURANCE

A. Tests

1. Cable shall be tested at the factory to confirm that the cable complies with requirements of ICEA Section 7.7.9 of S-66-524 or 7.5.9 of S-68-516. Refer to data sheet for additional test requirements.
2. Where applicable, the cable shall meet the requirements of the vertical tray flame test as described in IEEE 383-2.5.

1.05 DELIVERY, STORAGE AND HANDLING

A. Ship cable on manufacturer's standard reel sizes unless otherwise specified. Where cut lengths are specified, mark reel footage accordingly. Each reel shall contain one continuous length of cable. Reels shall be of the type specified on the data sheets. Provide impact protection by wood lagging or suitable barrier across the traverse of the reel. Provide moisture protection by manufacturer's standard procedure or heat shrinkable self-sealing end caps applied to both ends of the cable.

PART 2 P R O D U C T S

2.01 MANUFACTURERS

1. Alpha Wire Corporation
2. Belden Division, Cooper Industries, Inc.

3. Cablec Continental Cables Company
4. General Cable Company
5. Manhattan Electric Cable Corporation
6. Okonite Company

2.02 MATERIALS AND EQUIPMENT

A. Design. Provide cable with the following design characteristics. The cable shall consist of multiple conductors. The cable assembly shall be UL listed, flame, oil and sunlight resistant, and certified for continuous operation at the temperature specified on the Instrumentation Cable Data Sheets in wet or dry locations while installed in underground duct, conduit, or cable tray. The number and size of conductors supplied in each cable shall correspond to the quantities specified on the Instrumentation Cable Data Sheets. Each conductor shall be individually insulated. Pairs and triads shall have conductors which are twisted together with a drain wire, shielded, and covered with a jacket. Multi-pair/triad cables shall consist of the required number of electrically isolated, shielded pairs or triads, which are bundled together and covered by an overall jacket as specified on the Instrumentation Cable Data Sheets.

B. Conductors. Provide conductors which are Class B, concentric stranded, annealed tinned copper whose physical and electrical properties comply with ASTM B3, B8 or B33 and Part 2 of ICEA S-61-402, S-66-524, or S-68-516, unless otherwise specified on the Instrumentation Cable Data Sheets.

C. Insulation. Each conductor shall be insulated as specified on the Instrumentation Cable Data Sheets in compliance the requirements of Part 3 of ICEA S-61-402, S-66-524, or S-68-516. The average insulation thickness shall not be less than the dimensions shown in Table 7-32 or 7.5.1 of ICEA S-66-524 or S-68-516 for 600-volt insulation unless otherwise specified on the Instrumentation Cable Data Sheets. The minimum insulation thickness shall not be less than 90 percent of the value given in the table.

D. Drain Wire. Provide drain wire which is Class B, seven-stranded, tin-coated copper in accordance with ASTM B3, B8, or B33 and as specified on the Instrumentation Cable Data Sheets. The drain wire shall not be less than two AWG sizes smaller than the insulated conductor's size, except for multiple pair triad drain wires, which shall not be less than the insulated conductor size.

E. Shielding. Provide shielding consisting of laminated, nonburning, mylar-backed aluminum tape applied helically around a twisted pair or triad with the aluminum side in continuous contact with the drain wire unless otherwise specified on the Instrumentation Cable Data Sheet.

Wrap the tape around each twisted pair or triad with a 25 percent minimum overlap unless otherwise specified on the Instrumentation Cable Data Sheets.

F. Jacket. The physical and electrical properties of the jacket used to cover single or multi-pair or triad cables shall meet the requirements of section 7.7.7 or ICEA S-66-524 or section 7.5.6 of ICEA S-68-516. Jacket material is specified on the Instrumentation Cable Data Sheets. The jacket thickness shall be equal to the dimensions shown in Table 7-33 or 7.5.2 of ICEA S-66-524 or S-68-516. The jacket material is specified on the Instrumentation Cable Data Sheets. The jacket thickness shall be equal to the dimensions shown in Table 7-33 or 7.5.2 of ICEA S-66-524 or S-68-516.

G. Armor. Where requested, use instrumentation cables protected by an interlocked metal tape armor coating made of galvanized steel which meets the requirements of paragraph 4.5 of ICEA S-68-516 or S-66-524, unless otherwise specified on the Instrumentation Cable Data Sheets.

H. Conductor Identification. Use individual conductors in single-pair and single-triad cables which are color coded black and white; and black, white and red, respectively. Multi-pair-triad cables shall have one conductor in each pair or triad colored white, and all other conductors are color coded in sequence according to Table L-2 of Appendix 2 of ICEA S-66-524, and as specified on the Instrumentation Cable Data Sheets.

I. Cable Marking. Print cable marking information on the jacket of each cable at 2-foot intervals. Use a permanent printing method with color sharply contrasting the jacket color. See the Instrumentation Cable Data Sheets for the minimum information required.

PART 3 EXECUTION

3.01 PREPARATION

A. Complete cable raceway systems, underground duct banks and cable support systems before installing cables.

B. Verify sizing of raceways and pullboxes to ensure proper accommodation for the cables.

C. Check the length of the cable raceway system against the length of cable on the selected reel.

D. Do not install or work on PVC insulated or jacketed cables in temperatures below 32 degrees F.

E. Clean conduits of foreign matter before cables are pulled.

F. Provide at least 30 percent spare conductors or pairs.

3.02 INSTALLATION

A. Cable in Conduit and Ductbank

1. Install cables in accordance with the manufacturer's instructions and NEC Article 725 - Class 1, Class 2, and Class 3 Remote Control, Signaling and Power Limited Circuits. Do not exceed maximum wire tension, maximum insulation pressure and minimum bending radius.
2. Pull cables into conduits using adequate lubrication to reduce friction. Lubricants must not be harmful to the conductor insulation or cable jacket.
3. Conduits carrying low level signal cables shall be PVC-coated rigid steel.

B. Cable in Tray. Install instrument and signal cable in cable tray only when the tray is dedicated for this type cable and cables are approved for tray installation.

C. Termination

1. Do not splice conductors. For termination use crimp-on type ring tongue non-insulated tin plated copper lugs.
2. For shielded control cable, terminate the shield and ground it at one end only, preferably at the control panel end for instrument and communication cable and at the supply end for electronic power cables.
3. If splicing is required, maintain shield continuity by jumpering the ground shield across connection point where it is broken at junction boxes, or other splice points. Insulate these points from ground.
4. Mark wiring on both ends with circuit numbers or loop tag numbers. Heat shrink wire markers after the ring tongue terminal has been installed. Extend the marker over the crimp or base of the terminal.

D. Tests

1. Before connecting the cables, test insulation integrity and conductor continuity.
2. Use a 500 VDC megohmmeter and perform the cable insulation test in accordance with the operating instructions.

E. Termination. After the 600-volt cable has been tested with satisfactory results, the cable can be terminated at both ends to their designated terminal points.

END OF SECTION

DATA SHEET 1 of 4

IDENTIFICATION

CLIENT _____ MANUFACTURER _____
PROJECT _____ MODEL NO. _____
JOB NO. _____ SIZE _____
PLANT/LOCATION _____ SERIAL NO. _____
ITEM NO. _____ INQUIRY NO. _____
SERVICE _____ P.O. NO. _____
QUANTITY REQUIRED _____

NOTE: [ ] INDICATES INFORMATION TO BE COMPLETED BY MANUFACTURER

ENVIRONMENTAL CONDITIONS

TEMPERATURE RANGE: MAX _____ °C, MIN _____ °C
INSTALLATION: _____ ENCLOSED _____ OUTDOORS _____ INDOORS_____
EXPOSURE: _____ UNDERGROUND _____ UNDERWATER_____
_____ MOISTURE _____ DIRT _____ OZONE_____
_____ RADIATION _____ CHEMICALS:(PLEASE LIST) _____
SOILS: (PLEASE LIST) _____ ELECTROSTATIC INTERFERENCE _____
ELECTROMAGNETIC INTERFERENCE DISTURBANCES _____ RODENTS ____
OTHER: _____

PHYSICAL REQUIREMENTS

FLEXIBILITY: _____ VERY FLEXIBLE _____ FLEXIBLE _____ NOT CRITICAL
RESISTANCE TO: _____ ABRASION _____ IMPACT _____ CRUSH
_____ DEFORMATION _____ CUT THROUGH COLD FLOW
TERMINATION METHOD: _____

STRIPPABILITY: _____ MANUAL
_____ AUTOMATIC EQUIPMENT TYPE _____

ELECTRICAL REQUIREMENTS

_____ FREQUENCY (HZ) _____ CROSS TALK (ISOLATION IN DB AT FREQ)
_____ CURRENT (MILLIAMP) _____ DC RESISTANCE (OHMS/1000 FT)
_____ CAPACITANCE (PFD) _____ VOLTAGE BREAKDOWN (VOLTS/MILL)
_____ ATTENUATION (DB/100 FT) _____ INSULATION RESISTANCE (MEGOHMS/1000 FT)
ADDITIONAL REQUIREMENTS: _____

ITEM NO. _____

DATA SHEET 2 of 4

CONSTRUCTION

CONDUCTORS

SIZE (AWG): ___
_____ COPPER _____ STEEL _____ TINNED
_____ BARE _____ SOLID _____ COPPER COATED
_____ STRANDED _____ SILVER COATED
NUMBER OF CONDUCTORS: _____ NUMBER OF PAIRS _____
NUMBER OF TRIADS _____
ADDITIONAL REQUIREMENTS: _____

INSULATION

RUBBER: _____ SBR _____ NATURAL _____ SYNTHETIC _____ BUTYL_POLYBUTADIENE
_____ NEOPRENE _____ NBR _____ EPR/EPT
_____ CHLORSULFONATED POLYETHYLENE _____ SILICONE
PLASTIC: _____ PVC ____ LOW-DENSITY POLYETHYLENE _____ CELLULAR POLYETHYLENE ____ TEFLON
_____ HIGH-DENSITY POLYETHYLENE _ POLYPROPYLENE _____ POLYURETHANE
_____ NYLON _____ OTHER: _____
VOLTAGE RATING: _____ AC _____ DC WALL THICKNESS _____
LAY LENGTH PER INCH OF PAIRS: _____ LAY _____ TWIST
DRAIN WIRE: _____ SIZE _____ STRANDED __ SOLID _____ BARE COPPER _ TIN-COATED COPPER
COLOR _____
TEMPERATURE RATING: _____ 60° - 75°C (WET-DRY) __ 75°C - 90°C (WET-DRY)
_____ 90°C (WET-DRY) _____ OTHER: _____
SPECIAL REQUIREMENTS: _____

SHIELDING

TYPE SHIELDING: _____ BRAIDED _____ CONDUCTIVE PLASTIC
_____ CONDUCTIVE COTTON _____ SPIRAL-SERVED
_____ MYLAR FILM-ALUMINUM FOIL __POLYESTER FILM-ALUMINUM FOIL
_____ OTHER: _____
POLYESTER FILM-ALUMINUM LOCATION: _____ INSIDE _ OUTSIDE _____ PAIR SHIELD ISOLATED
_____ SEPARATOR _____ FILTER

SHIELD COMBINATION

OVERSHIELD: _____ POLYESTER FILM-ALUMINUM __ BRAID _ SERVED
_____ OTHER: _____
BRAID SHIELD: _____ TYPE STRANDS _____% COVERAGE _ TINNED
_____ BARE _ COPPER _____ ALUMINUM
OVERALL TYPE: _____ POLYESTER _____ PAPER __ OTHER: ____

JACKET

TYPE: _____ POLYVINYL CHLORIDE _____ POLYETHYLENE
_____ HEAVY DUTY NEOPRENE _____ CHLOROSULFONATED POLYETHYLENE
_____ NYLON _____ OTHER: _____

ITEM NO. _____

DATA SHEET 3 of 4

JACKET (Cont)

THICKNESS (MILS OR MM) _____

COLOR: _____ BLACK _____ OTHER: _____

SPECIAL REQUIREMENTS: _____

ARMORING

TYPE: _____ INTERLOCKED (POSITIVE) OTHER: _____

MATERIAL: _____ GALVANIZED STEEL _____ ALUMINUM _____

_____ OTHER: _____

COVERING: _____ POLYVINYL CHLORIDE _____ OTHER: _____

COLOR: _____ BLACK _____ OTHER: _____

SPECIAL REQUIREMENTS: _____

MARKING

CONDUCTOR IDENTIFICATION

SINGLE-CONDUCTOR: _____

MULTI-CONDUCTOR: _____

CABLE MARKING

REQUIRED: _____ MANUFACTURER _____ CONDUCTOR SIZE

_____ NO. OF CONDUCTORS _____ VOLTAGE RATING

_____ UL LABEL _____ NEC TYPE

_____ TEMPERATURE RATING _____ MONTH/YEAR OF MANUFACTURE

_____ OTHER: _____

FACTORY TESTING/DOCUMENTATION

_____ PHYSICAL _____ FLAME TESTS (SPECIFY STANDARDS) _____

_____ ELECTRICAL _____ OTHER TESTS: _____

_____ MEGGER

_____ OTHER: _____ _____

_____ _____

_____ _____

QUALITY ASSURANCE

_____ NO ADDITIONAL REQUIREMENTS _____ ATTACHED SPECIFICATION _____

PACKAGING

_____ DOMESTIC _____ EXPORT

SHIPPING

REEL TYPE: ___ RETURNABLE _ NON-RETURNABLE _____ LENGTH PER REEL _____

ADDITIONAL REQUIREMENTS: _____

ITEM NO. _____

INSTRUMENTATION CABLE

DATA SHEET 4 of 4

1. [ ] **MANUFACTURER DATA**
2. CABLE DIMENSION (O.D. IN.) _____ SHIPPING TIME _____
3. CABLE CROSS-SECTIONAL AREA _____ OTHER _____
4. CABLE WEIGHT (LBS/FT) _____
5. CABLE MIN BENDING RADIUS _____
6. TENSILE STRENGTH _____
7. GROSS WEIGHT/REEL (LBS) _____
8. TOTAL CUBIC FEET/REEL _____
9. SHORT CIRCUIT WITHSTAND CURVES _____
10. CABLE TESTING REQUIREMENTS _____
11.
12. **NOTES**
13.
14.
15.
16.
17.
18.
19.
20.
21.
22.
23.
24.
25.
26.
27.
28.
29.
30.
31.
32.
33.
34.
35.
36.
37.
38.
39.
40.
41.
42.
43.
44.
45.
46.
47.
48.
49.
50.

ITEM NO. _____

SECTION 16131

DEVICE, PULL AND JUNCTION BOXES

PART 1 GENERAL

1.01 SECTION INCLUDES

A. Specifications for device, pull, and junction boxes.

1.02 REFERENCES

A. American National Standards Institute/National Electrical Manufacturers Association (ANSI/NEMA).

1. FB1 - Fittings and Support for Conduits and Cable Assemblies
2. 250 - Enclosures for Electrical Equipment (1000 volts maximum)

B. American National Standards Institute/National Fire Protection Association (ANSI/NFPA), NFPA70 - National Electrical Code (NEC) - Article 314 - Outlet Device, Pull and Junction Boxes, Conduit Bodies and Fittings.

C. Underwriters Laboratories (UL):

1. 50 - Safety Cabinets and Boxes
2. 508 - Safety Industrial Control Equipment
3. 514B - Safety Fittings for Conduit and Outlet Boxes
4. 886 - Safety Outlet Boxes and Fittings for Use in Hazardous Areas

1.03 SUBMITTALS

A. Submit the following under provisions of Section 01330 – Submittal Procedures:

1. Manufacturer's cut sheets, catalog data
2. Instruction for handling and storage
3. Installation instructions
4. Dimensions and weights

1.04 DELIVERY, STORAGE AND HANDLING

A. Pack and crate boxes to permit ease of handling and to provide protection from damage during shipping, handling and storage.

PART 2 PRODUCTS

2.01 ACCEPTABLE MANUFACTURERS

A. Sheet Metal Boxes

1. Hoffman Industrial Products
2. Pauluhn Electric Manufacturing Company
3. Hennessy
4. Tanco
5. Tejas
6. Circle A.W.

B. Cast Device Boxes

1. Appleton Electric Company
2. Crouse-Hinds, Division of Cooper Industries
3. Killark Electric Manufacturing Company

2.02 MATERIALS AND EQUIPMENT

A. Sheet Metal Boxes

1. Provide UL-approved junction boxes and pull boxes manufactured from stainless steel sheet metal and meeting requirements of NEMA 4X for corrosive and wet area, NEMA 250 and NEC Article 314.
2. Provide boxes with a stainless steel continuous hinge, closure hasps and all- stainless steel hardware. Junction boxes shall be mounted so the door opens to the right or to the left.
3. Furnish the door with neoprene gasket and provision for padlock.

B. Device Boxes

1. Provide UL-approved boxes designed and manufactured to house electrical devices like receptacles and switches, and in conformance with NEMA FB1 and NEC Article 314.
2. Supply boxes that are hot-dip galvanized on cast iron suitable for corrosive and wet atmosphere.

C. Hardware

1. Mounting Hardware: Stainless steel
2. Conduit Connectors: Watertight as manufactured by Myers Hubs, or equal.

PART 3 EXECUTION

3.01 PREPARATION

A. Review the drawings and determine how many boxes of each kind are required and check if supplied quantity is sufficient.

3.02 INSTALLATION

A. Boxes described in this specification shall be used both in dry and wet, corrosive areas, both inside and outside locations.

B. Install boxes in accordance with NEC Article 314 in locations indicated on the Drawings. Junction boxes shall be mounted so the door opens to the right or to the left.

C. Install junction and pull boxes in readily accessible places to facilitate wire pulls, maintenance and repair. Junction boxes shall be sized for the number and size of conduits that enter the junction box.

D. Plug unused conduit openings.

E. Make conduit connections to sheet metal boxes with watertight conduit connectors.

F. Label boxes with phenolic nameplates as required in Section 16195.

END OF SECTION

SECTION 16160

CABINETS AND ENCLOSURES

PART 1 GENERAL

1.01 SECTION INCLUDES

A. Specifications for cabinets and enclosures for housing of control panels and motor controls.

1.02 REFERENCES

A. National Electrical Manufacturers Association (NEMA).

1. 250 - Enclosures for Electrical Equipment (1000 volts maximum).

a. NEMA 3 - Enclosures for outdoor use primarily to provide a degree of protection against wind-blown dust, rain, and sleet; undamaged by formation of ice on the enclosure.
b. NEMA 12 - Enclosures for indoor use primarily to provide a degree of protection against dust, falling dirt, and dripping non-corrosive liquids.

B. American National Standards Institute/National Fire Protection Association (ANSI/NFPA), NFPA 70 - National Electrical Code (NEC), Article 312 - Cabinets, Cutout Box, and Meter Socket Enclosures.

C. Underwriters Laboratories (UL), UL 50 - Safety for Cabinets and Boxes.

1.03 SUBMITTALS

A. Submit the following under provisions of Section 01330 – Submittal Procedures:

1. Manufacturer's cut sheets and catalog data
2. Instruction for handling and storage
3. Installation instructions
4. Dimensions and weights

1.04 DELIVERY, STORAGE AND HANDLING

A. Have cabinets and enclosures packed and crated to permit ease of handling and to provide protection from damage during shipping, handling and storage.

PART 2 P R O D U C T S

2.01 ACCEPTABLE MANUFACTURERS

A. The EMF Company

B. Hennessey Products, Inc.

C. Hoffman Industrial Products

D. Pauluhn Electric Manufacturing Company

E. Weigman Company

F. Rose Enclosure

G. N.E.M.A. Enclosure Mfg. Co.

H. Rittal

2.02 MATERIALS AND EQUIPMENT

A. Sheet Metal Boxes

1. Provide enclosures manufactured in accordance with NEMA 250 and NEC Article 312. Fabricate outdoor NEMA 3 panels from 0.125- inch thick type 5052 H32 aluminum or 14 gauge, 316 stainless steel for installation in areas that are not air conditioned. NEMA 12 indoor panels for installation in air conditioned areas shall be painted steel.
2. Dimensions and special features are shown on the Drawings.
3. Construct outdoor enclosures with continuously welded seams ground smooth.
4. Additional material thickness and bracing requirements shall be determined by the manufacturer to provide the strength required by the standard listed. The bracing shall be provided in such a way as to minimize the protrusion into the wiring and the equipment spaces.

5. Install the door with a stainless steel continuous hinge, stainless steel padlock handle with gasket and stainless steel hardware. Junction boxes shall be mounted so the door opens to the right or to the left.
6. Furnish the door with oil-resistant neoprene gasket attached with oil-resistant adhesive and held in place with aluminum retaining strips.
7. Use a single, 3/4-inch minimum, door handle that provides a 3-point latching through latch rods with rollers. Provide rollers with at least 3/4-inch diameter.
8. Gasketed overlapping doors may be used instead of a center post.
9. Provide heavy duty lifting eyes of suitable material.
10. Fabricate the enclosure with a stud-mounted panel inside. Make panels from 12-gauge steel painted with white enamel finish.
11. Equip both NEMA 12 and NEMA 3 enclosures with thermostatically controlled space heaters and corrosion inhibitors. Provide heaters rated for 240V for 120V operation.
12. Weld mounting feet to the enclosure if called for on the Drawing.
13. Include a high impact plastic data pocket in the enclosure.
14. Provide ground connections on the enclosures to enable grounding of the enclosure with a No. 2 AWG conductor.
15. Equip free-standing outdoor cabinets with inner and outer door restraint bars to prevent door swing during windy conditions.
16. Supply indoor enclosures with filtered passive air intake and exhaust openings, 4-inch square in the side near the top and near the bottom of the adjacent side panel.

B. Hardware

1. Mounting Hardware: Stainless steel
2. Conduit Connectors: Watertight as manufactured by Myers Hubs, or equal.

2.03 TESTING

A. Test cabinets and enclosures in accordance with UL 50 so unit qualifies for a UL label.

PART 3 EXECUTION

3.01 PREPARATION

A. Review Drawings and determine how many enclosures of each kind are required and check if supplied quantity is sufficient.

B. Check the mounting pads or foundations for proper mounting dimensions and features, including grounding conductor stub-up.

3.02 INSTALLATION

A. Use enclosures described in this specification only above grade.

B. Install enclosures in accordance with NEC Article 312 in locations as indicated on the Drawings.

C. Install enclosures in readily accessible locations to facilitate general operations, wire pulls, maintenance and repair.

D. Plug unused conduit openings.

E. Make conduit connections to the enclosures with watertight conduit connectors.

F. Identify all components in cabinets with phenolic nameplates as required in Section 16195.

G. Use pre-printed tubular heat-shrink type wire and cable markers to label each end of all conductors.

END OF SECTION

SECTION 16161

PANELBOARDS

PART 1 GENERAL

1.01 SECTION INCLUDES

A. Specifications for panelboards.

1.02 REFERENCES

A. American National Standards Institute/National Electrical Manufacturers Association (ANSI/NEMA)

1. NEMA AB1: Molded Case Circuit Breakers
2. NEMA PB1: Panelboards
3. NEMA PB1.1: Instruction for Safe Installation Operation and Maintenance of Panelboards rated 600 volts or less.
4. NEMA PB1.2: Application Guide for Ground-fault Protective Devices for Equipment

B. Federal Specifications, FS W-C-375A: Circuit Breakers, Molded Case, Branch Circuit and Service.

C. American National Standards Institute/National Fire Protection Association (ANSI/NFPA), NFPA No. 70 - National Electrical Code (NEC), Article 408 - Switchboards and Panelboards.

1.03 SUBMITTALS

A. Submit the following under provisions of Section 01330 – Submittal Procedures:

1. Manufacturer's cut sheets and catalog data
2. Breaker arrangement
3. Breaker characteristic curves
4. Instruction for handling and storage
5. Installation instructions
6. Dimensions and weights

1.04 DELIVERY, STORAGE AND HANDLING

A. Have panelboards packed and crated to permit ease of handling and to provide protection from damage during shipping, handling and storage.

PART 2 P R O D U C T S

2.01 ACCEPTABLE MANUFACTURERS

A. Sheet Metal Boxes

1. Cutler-Hammer Products
2. General Electric
3. Siemens Energy and Automation
4. Square D Company
5. Westinghouse Electric

2.02 MATERIALS AND EQUIPMENT

A. Basic Requirements

1. Use panelboards manufactured and tested in accordance with NEMA PB 1.
2. Provide circuit breakers of industrial grade, manufactured and tested in accordance with NEMA AB 1 and Federal Specification FS W-C-375.
3. Do not exceed 42 available single pole branch circuits in any one panelboard.
4. Perform a load analysis to assure the panel rating is not overloaded when new loads are added to existing panels.

B. Rating

1. Voltage rating, current rating, number of phases, number of wires and number of poles are indicated on Drawings.
2. Branch circuit breaker interrupting capacity shall be minimum 10,000 ampere RMS symmetrical for 208V; 25,000 ampere RMS symmetrical for 480V.

C. Circuit Breakers: Molded case, bolt-on thermal magnetic type with number of poles and trip ratings as shown on the Drawings. Provide ground fault interrupters with trip rating where shown on the Drawings.

D. Bus System

1. Bus Bars: 98 percent conductivity copper. Provide a solid neutral bar in 4-wire panelboards. Include ground bus in all panels. Provide split-bus panels where shown on Drawings.
2. Main: Circuit breaker or main lugs only as indicated on the Drawings or as required to meet the current interrupting ratings.

E. Box and Trim

1. Construction: Code grade steel, ample gutter space, flush door, flush snaplatch and lock.
2. Trim: Surface or flush as required. Enclose panelboards located outdoors, in other wet and corrosive areas, or in non air conditioned areas in NEMA 4X weatherproof stainless steel enclosures. Enclose indoor panelboards installed in air conditioned areas in a NEMA 1 enclosure with manufacturer's standard gray enamel finish.
3. Directory: Typed card, with glass cover in frame on back of door giving the circuit numbers and the area or equipment served.

F. Conduit Connectors: Watertight as manufactured by Myers Hubs, or equal.

PART 3 EXECUTION

3.01 PREPARATION

A. Review Drawings to verify that panelboards are correct for the application.

3.02 INSTALLATION

A. Install the panelboard in accordance with NEMA PB 1.1 and NEC Article 408.

B. Mount panelboards 6'-0" (to top of cabinet) above finished floor or grade. In wet and corrosive areas, including outdoor locations, install panel enclosures on spacers to provide approximately 1/4-inch between back of cabinet and mounting surface. Mounting hardware shall be type 316 stainless steel.

C. In wet and corrosive areas, including outdoor locations, connect conduit to the bottom of enclosure and to the lower 30 percent of the sides using watertight connectors.

END OF SECTION

SECTION 16170

GROUNDING AND BONDING

PART 1 G E N E R A L

1.01 SECTION INCLUDES

A. Grounding electrodes and conductors

B. Equipment grounding conductors

C. Bonding

D. Power system grounding

E. Communication system grounding

F. Electrical equipment and raceway grounding and bonding

G. Control equipment grounding

1.02 REFERENCES

A. American Society for Testing and Materials (ASTM)

1. ASTM B3: Soft or Annealed Copper Wires
2. ASTM B8: Concentric-Lay-Stranded Copper Conductors, Hard, Medium Hard, Soft
3. ASTM B33: Tinned Soft or Annealed Copper Wire for Electrical Purposes

B. Institute of Electrical and Electronics Engineers (IEEE)

1. IEEE 142-82: Recommended Practice for Grounding of Industrial and Commercial Power Systems
2. IEEE 383-2.5: IEEE Standard for Type Test of Class IE Electric Cables, Field Splices, and Connections for Nuclear Power Generating Stations.

C. Underwriters' Laboratories (UL)

1. UL 83: Thermoplastic Insulated Wire and Cables
2. UL 467: Grounding and Bonding Equipment

D. National Fire Protection Association (NFPA), NFPA No. 70 - National Electrical Code (NEC), Article No. 250 - Grounding.

1.03 SUBMITTALS

A. Submit the following under the provisions of Section 01330 – Submittal Procedures:

1. Manufacturer's cut sheets and catalog data
2. Installation, terminating and splicing procedure
3. Instruction for handling and storage
4. Dimensions and weight

1.04 QUALITY ASSURANCE

A. Tests

1. Use insulated cable conforming to requirements of the vertical tray flame test as described in IEEE 383-2.5.
2. Test grounding system in the field in accordance with procedures outlined in Part 3 - Execution.

1.05 DELIVERY, STORAGE AND HANDLING

A. Ship grounding cable on manufacturer's standard reel sizes unless otherwise specified. Where cut lengths are specified, mark reel footage accordingly. Each reel shall contain one continuous length of cable. Provide impact protection by wood lagging or suitable barrier across the traverse of the reel. Pack and crate other materials specified to withstand normal abuse during shipping, handling and storage.

PART 2 P R O D U C T S

2.01 ACCEPTABLE MANUFACTURERS

A. Cable

1. American Insulated Wire Company
2. Cablec Continental Cables Company
3. General Cable Company

4. Okonite Company
5. Pirelli Cable Corporation
6. Rome Cable Corporation
7. Triangle Wire and Cable, Inc.

B. Ground Rods and Connectors:

1. Blackburn
2. Copperweld
3. Thomas & Betts

C. Exothermic Connections:

1. Burndy Corporation (Therm-O-Weld)
2. Erico Products (Cadweld)

D. Grounding Connectors:

1. Burndy Corporation
2. O.Z. Gedney
3. Thomas & Betts

2.02 MATERIALS AND EQUIPMENT

A. Design. Provide grounding cable and materials with the following characteristics:

1. Use a grounding system designed in accordance with NEC Article No. 250 - Grounding, and the IEEE 142-82 - Recommended Practice for Grounding of Industrial and Commercial Power Systems.

B. Materials

1. Use grounding conductors, bare or insulated, which are manufactured and tested in accordance with applicable standards ASTM B3, ASTM B8 and ASTM B33.
2. Provide a main ground loop of No. 4/0 AWG, Class C stranded, bare copper cable. Small groups of isolated equipment may be grounded by a No. 2 AWG minimum insulated conductor connected to the main loop. Generally, taps shall be sized as follows:

a.	Main ground loop or grid	#4/0 minimum
b.	Switchgear, motor control centers and power transformers	#4/0

c.	Motors 200 hp and above	#4/0
d.	Power panels - AC and DC	#2/0
e.	Control panels and consoles	#2
f.	Building columns	#4/0
g.	Fencing posts	#2/0

3. Where single conductor insulated grounding conductors are called for, use 600-volt insulation. Use ground conductors identified with green insulation or green tape marking.

4. Supply identifying ribbon which is PVC tape, 3 inches wide, red color, permanently imprinted with "CAUTION BURIED ELECTRIC LINE BELOW" in black letters as specified in Section 16195, Electrical Identification.

5. Utilize flexible copper braid across hinged chain link or fence gates to bond the movable portion to the grounded fence post.

PART 3 EXECUTION

3.01 PREPARATION

A. Complete site preparation and soil compaction before trenching and driving ground rods for the underground grid.

B. Verify from Drawings the exact location of stub-up points for grounding of equipment, fences and building or steel structures.

3.02 CONSTRUCTION CRITERIA

A. The main ground loop at a depth of at least 30 inches below earth surface. Connect the ground loop to ground rods and to tap connections to form a complete system as indicated on the electrical Drawings. The Contractor shall give special attention to the grounding of service equipment, structures and fences to comply with the NEC, local authorities and the serving utility company.

B. Electrical equipment, buildings, tanks, and other structures and equipment shall be grounded as indicated on the Drawings. Where ground rods are required, the rods shall be 10 feet long, 3/4 inch diameter, copper-clad steel ground rods. Rods shall be driven vertically, and the top of the rods shall be a minimum of 18 inches below finished grade, or as specified on the Drawings. Ground wells will be provided for all driven rods.

C. Local pushbutton and selector switch stations, two-wire control devices, disconnect switches, lighting transformers, panelboards, operator panels, benchboards, and the enclosures of other electrical apparatus shall be grounded through and equipment grounding conductor run with the power supply or control circuit conductors or shall be grounded as shown on the Drawings.

D. Ground medium voltage motors, in addition to the grounding conductors in the motor feeder cable, with a separate No. 4/0 AWG cable to motor frame.

E. Motors having power supplied by multiconductor cable shall be grounded by a separate grounding conductor in the cable and where supplied by single conductor cable in conduit by a grounding conductor pulled in the conduit. Connect ground conductors to the ground bus in the motor control center and to the ground terminal provided in the motor conduit box.

F. Do not ground the insulated bearing pedestals of large motors.

G. Connect ladder-type cable trays to the grounding electrode system.

H. Install a warning ribbon approximately 12 inches below finished grade directly above the ground grid.

I. Connect fence posts of chain link and metal fences to the main ground loop at least every 50 feet. Install bonding straps to gates.

3.03 INSTALLATION

A. Equipment Grounding

1. Make grounding connections to surfaces which are dry and cleaned of paint, rust, oxides, scales, grease and dirt to ensure good conductivity. Clean copper and galvanized steel to remove oxide before making welds or connections.
2. Use the exothermic welding process for below-grade grounding connections, except at ground rods. Use mechanical connectors or thermal connections for above-grade grounding connections as shown on the Drawings.
3. Make grounding connections to electrical equipment, vessels, mechanical equipment and ground rods in accordance with the Drawings.
4. Ground tanks and vessels by making connections to integral structural supports or to existing grounding lugs or pads, and not to the body of the tank or vessel.

5. Leave ground connections to equipment visible for inspection. Protect them with PVC non-metallic conduit as indicated on the Drawings.
6. Make connections to motor frames and ground buses with lugs attached to the equipment by means of bolts. Do not use motor anchor bolts or equipment housing for fastening lugs of grounding cable.
7. Where the wiring for lighting systems consists of single conductor cables in conduit, provide each conduit with an equipment grounding conductor. Use a grounding conductor with green colored insulation and ground equipment in the lighting system.

B. Raceway and Support Systems Grounding

1. Install raceway, cable rack or tray and conduit so that it is bonded together and permanently grounded to the equipment ground bus, according to the Drawings. Connection to conduit may be grounding bushing or ground clamp.
2. Install raceway at low voltage motor control centers or other low voltage control equipment so that it is bonded and grounded, except that any conduit which is effectively grounded to the sheet metal enclosure by bonding bushing or hubs need not be otherwise bonded.
3. Where a grounding conductor is run in or on a cable tray, bond the grounding conductor to each section of cable tray with a cable tray ground clamp.
4. Where only grounding conductor is installed in a metal conduit, bond both ends of the conduit to the grounding conductor.
5. Provide flexible "jumpers" around raceway expansion joints. Use copper bonding straps for steel conduit. Install jumpers across cable tray joints which have been parted to allow for expansion and any hinged cable tray connections.

C. Fences and Gates. Ground fences, fence posts and gates to the underground grid as shown on the Drawings.

D. Power System Grounding

1. Solidly ground the secondary neutral of the main power supply transformer either to the ground grid or through an impedance. See Drawings for details.
2. Solidly ground the neutral of lighting, instrument and control transformers.

E. Cable Armor and Shields

1. For shielded control cable, terminate and ground the shield at one end only, preferably at the control panel end for instrument and communication cable and at the supply end for electronic power cables. Maintain shield continuity by jumpering the ground shield across connection point where it is broken at junction boxes, or other splice points. Insulate these points from ground.
2. Connect the ground wire in power cable assemblies at each terminal point to a ground bus, if available, or to the equipment enclosure. Do not carry these ground wires through a "doughnut" current transformer (CT) used for ground fault relaying; do carry ground leads from stress cones through CTs. Ground power cable armor and shield at each terminal point.

F. Test Wells

1. Provide access (test wells) for testing the ground grid system at one or several ground rod locations. Make test wells of a pipe surrounding the rod and connections with a cover placed on top at grade level. See Drawings for details.
2. Install a test well at the service entrance pole to serve as the service entrance grounding electrode.

G. Test

1. Perform ground resistance tests after underground installation and connections to building steel are complete, unless otherwise noted on applicable Drawings.
2. Make tests at each ground test well using a "fall of potential" test method. Each ground test well shall not exceed a maximum resistance of 5 ohms. Where measured values exceed this figure, install additional ground rods as required to reduce the resistance to the specified limit.

H. Inspection. Inspection of the grounding system by the Project Manager and the local Code Inspector must take place before the grid trenches are backfilled.

END OF SECTION

SECTION 16195

ELECTRICAL IDENTIFICATION

PART 1 G E N E R A L

1.01 SECTION INCLUDES

A. Specification for electrical identification including:

1. Nameplates and labels
2. Wire and cable markers
3. Conduit markers
4. Cable tray markers
5. Underground warning tape
6. Warning labels

1.02 REFERENCES

A. American National Standards Institute/National Fire Protection Association (ANSI/NFPA)

1. No. 70 - National Electrical Code (NEC)

a. Article 110 - Requirements for Electrical Installation
b. Article 430 - Transformers and Transformer Vaults

B. City of Houston Building Code

C. Other applicable Codes and Standards as referenced in other Sections.

D. Underwriters Laboratories. U.L. Standards No. 224 - Extruded Insulated Tubing

1.03 SUBMITTALS

A. Submit the following under the provisions of Section 01330 Submittal Procedure:

1. Manufacturer's cut sheets and catalog data
2. Description of materials used
3. Label or nameplate dimensions
4. Engraving or imprint legends

5. Instruction for handling and storage
6. Installation instructions

1.04 DELIVERY, STORAGE AND HANDLING

A. Pack materials to permit ease of handling and to provide protection from damage during shipping, handling and storage.

PART 2 P R O D U C T S

2.01 ACCEPTABLE MANUFACTURERS

A. Almetek Industries Incorporated

B. Brady U.S.A. Incorporated

C. Ideal Electric Company

D. Raychem Corporatio

E. 3M Electrical Products Division

F. Thomas & Bett

G. Tyton Corporation

2.02 MATERIALS AND EQUIPMENT

A. Nameplates and Labels

1. Provide an identification tag for each item of electrical and instrumentation equipment showing its item number and service or application. Use the description shown on the electrical Drawings.
2. For nameplates, use 3-ply phenolic material engraved to show black lettering on a white background. Size the nameplates approximately 1 inch wide and 3 inches long for 3 lines of 3/16 inch - 16 letters with a 0.8 condensed factor.
3. Generally, provide large pieces of equipment with engraved nameplates; provide additional nameplates at pushbuttons and other local devices; as detailed.

Provide identification for all other electrical and instrumentation equipment, devices, or enclosures, such as MCC's, panelboards, disconnect switches, capacitors, relays, and dedicated receptacles not furnished with readily noticeable tag, nameplates, or other means of identification.

4. Install nameplates on the front cover of transformers stating the transformer service location number or identification number, the panelboard or device served, and main breaker feeding the transformer (MCC No. and compartment), and the drawing number on which the transformer schematic is shown.
5. Furnish equipment, such as motor starters, safety switches, welding receptacles and circuit breakers, with 1" x 3" plastic nameplates stating description of item served.
6. Provide nameplates for motors giving the driven equipment description, the service location number, and the MCC number with compartment number when applicable. Nameplates will normally be mounted adjacent to the motor at the motor pushbutton when one is furnished.
7. Install nameplates on the outside and inside of doors to circuit breaker panelboards (i.e., lighting, instrument or receptacle panels). State the panelboard name, the drawing number on which the panelboard schedule shows, and the main breaker feeding the panel (MCC No. and compartment).
8. Type panelboard directories and insert them inside the panelboard doors.
9. Place a large nameplate no less than 3"x5" on control panels, relay panels, junction boxes, or enclosures with electrical devices mounted inside or on the outside of the enclosure indicating the purpose of the cabinet.
10. Provide a nameplate on MCC motor starter doors duplicating motor nameplate data.

B. Wire and Cable Markers

1. Use pre-printed tubular heat-shrink type wire and cable markers at each end of all conductors.
2. Select markers manufactured so that the heat-shrink process makes the imprint permanent and solvent-resistant.
3. Use markers that are self-extinguishing, conforming to U.L. Standard No. 224 for print performance, heat shock, and flammability.
4. Provide marker material that is flexible, radiation cross-linked polyolefin with 3 to 1 shrink ratio, rated 600 volts, and white in color.

C. Conduit Markers

1. Provide conduit markers made of stainless steel tags approximately 2 inches x 1 inch x 19 gage.
2. Stamp the caption on the tag and have it black filled.
3. Punch tags for tie fasteners. Fasten tags to the conduits with stainless steel braided wire.

D. Cable Tray Markers

1. For high visibility and contrast, use cable tray markers that are yellow with black legend.
2. Use markers made of vinyl impregnated cloth, suitable for exposure to corrosive, wet, and abrasive environment.
3. Make markers of pre-cut individual letters or numbers with pressure sensitive adhesive backing.
4. Size legend characters to 4 inches high on a total marker height of approximately 5 inches, suitable for applying to 6-inch side rails of a cable tray.

E. Underground Warning Tape

1. Provide warning tape made of 4 mil thick polyolefin film, 3 inches wide, suitable for direct burial and resistant to alkalis, acids, and other common soil substances.
2. Use red tape with black legend printed in permanent ink.

F. Warning Labels

1. Place OSHA safety labels on enclosures and boxes 100 cubic inches or more containing electrical equipment or terminations.
2. Provide OSHA color codes for the labels. Use labels made from 4 mil vinyl with pressure sensitive adhesive backing.
3. The warning label caption is DANGER - 480 VOLTS or as indicated on the drawings
4. Size labels either 5 inches x 3-1/2 inches or 10 inches x 7 inches, as indicated on the Drawings.

PART 3 EXECUTION

3.01 PREPARATION

A. Degrease and clean surfaces where adhesive labels will be applied.

B. Drill holes for nameplates to be fastened with stainless screws.

C. Prepare the cable ends for termination and conductor markings.

D. Identify conduits at terminating points and select tags accordingly.

3.02 INSTALLATION

A. Install nameplates and labels in accordance with the manufacturer's instructions and the Drawings.

B. Apply wire and cable markers in accordance with manufacturer's instructions using a heat gun with properly sized nozzle for the application. Tag the wires at both ends with the same notation.

C. Tag conduits at junction boxes, pull boxes, and at other termination points.

D. Identify cable trays at the time of installation with the alphanumeric number shown on the Drawings. Label cable trays on the outside rail. Place the tray identifier at each point where the tray designation changes and at 200 foot intervals in between, but not less than two per run.

E. Identify underground conduits, cables, or duct banks using the underground warning tape. The underground grounding grid, including the laterals. Also use underground warning tape. Install one tape per trench at 12 inches below grade or as indicated on the Drawings. For wide trenches or duct banks, install one warning tape per 24 inch width.

F. Apply the 5 inches by 3-1/2 inches warning labels to disconnect switches, panelboards, terminal boxes, and similar devices in accordance with manufacturer's instruction and the Drawings. Apply the 10 inches x 7 inches warning labels to larger control panel enclosures, motor control centers, and to entrance doors to buildings containing electrical power and control equipment.

END OF SECTION

SECTION 16290

LOW VOLTAGE SURGE PROTECTION DEVICE

PART 1 GENERAL

1.00 CONDITIONS

A. This copyright protected © specification is issued confidentially for this specific project only. Reproduction of this document for any other purpose is prohibited.

B. Refer to Section 16012 - "Electrical Work" for additional requirements. Failure to do so will be at expense of Contractor and at no additional cost to Owner.

C. Contractor shall contact local Factory Representative to verify all equipment purchased conforms to the requirements of this project. Failure to do so may result in equipment removal and replacement at Contractor's expense. See Section 16012 – "Electrical Work", Item 1.04 – "Submittals" for submittal requirements.

D. All equipment installed on this project shall incorporate all devices and features to protect that equipment from the influence of other equipment, line voltage and phase irregularities, harmonics and other disturbances that may effect the proper and safe operation of that equipment whether these required features are a standard component of that equipment as an off-the-line product. No equipment shall be installed without these features.

1.01 SUMMARY REQUIREMENTS

A. The Contractor shall furnish and install Surge Protective Device (SPD) equipment having the electrical characteristics, ratings, and modifications as specified herein. The AC surge protection shall be integrated into each of the following items in this project: Electrical distribution equipment, Main breaker, switchgear, transfer switches, switchboards, panelboards, busway (integrated within bus plug), motor control centers, solid-state starters, VFD's and local control panels, including equipment vendor control panels. This provision may not appear on all drawings.

1.02 REFERENCE STANDARDS AND PUBLICATIONS

A. General: The latest edition of the following standards and publications shall comply with the work of this section:

1. ANSI/IEEE C84.1, American National Standard for Electric Power Systems and Equipment - Voltage Ratings (60 Hertz)
2. ANSI/IEEE C62.41, Guide on the Surge Environment in Low-Voltage (1000V and Less) AC Power Circuits
3. ANSI/IEEE C62.45, Recommended Practice on Surge Testing for Equipment Connected to Low-Voltage (1000V and Less) AC Power Circuits
4. Underwriters Laboratories-UL 1449 Third Edition, Standard for Safety - Surge Protective Devices
5. Underwriters Laboratories-UL 1283, Standard for Safety - Electromagnetic Interference Filters
6. National Fire Protection Association, NFPA 70 - National Electrical Code
7. IEEE Standard 142, IEEE Recommended Practice for Grounding of Industrial and Commercial Power Systems (IEEE Green Book)
8. ANSI/IEEE Standard 141, IEEE Recommended Practice for Electric Power Distribution for Industrial Plants (IEEE Red Book)
9. IEEE Standard 1100, IEEE Recommended Practice for Powering and Grounding Electronic Equipment (IEEE Emerald Book)
10. National Electrical Manufacturer's Association, NEMA LS-1
11. MIL Standard 220B Method of Insertion-loss Measurement
12. ISO 9001, Quality Management Requirements

1.03 MANUFACTURER QUALIFICATIONS

A. Eaton/Cutler Hammer shall be the basis of design. All products submitted shall comply with, meet, or exceed the specifications of the Eaton model type specified herein. Equal products manufactured by Square D Company are acceptable. Equal products as pre-approved are acceptable.

B. All surge protective devices for service entrance, distribution, and branch circuit protection within a facility shall be provided by a single manufacturer.

C. The manufacturer must be regularly engaged in the manufacture of surge suppression products for the specified categories for no less than 10 years.

D. The Manufacturer of the assembly shall be the Manufacturer of the major components within the assembly.

E. For the equipment specified herein, the Manufacturer shall be ISO 9001 or 9002 certified.

F. The Manufacturer of this equipment shall have produced similar electrical equipment for a minimum period of 5 years. When requested by the Engineer, an acceptable list of installations with similar equipment shall be provided demonstrating compliance with this requirement.

G. The surge protection device shall be compliant with the Restriction of Hazardous Substances (RoHS) Directive 2002/95/EC.

1.04 WARRANTY

A. Contractor shall provide full 10-year service warranty on the overall installation and shall include all labor and materials required to repair or replace equipment and/or components that are defective or malfunctioning. Included under this warranty shall be all equipment, devices, hardware, and software. This warranty shall begin on date of written "Final Acceptance" of the electrical systems and to be executed as required at no additional cost to the Owner. Contractor's warranty shall also guarantee 24-hour service response time and shall provide labor, work, or materials as necessary to maintain plant operation when replacement parts are on order. In no case shall plant electrical systems be out of service for more than 24 hours from time Owner calls for warranty service. This shall be provided at no additional cost to the Owner. All equipment and materials installed shall have full warranty from Manufacturer that guarantees equipment is rated for harsh industrial electrical/mechanical environment in which it is installed. Where Manufacturer's products fail prematurely, Manufacturer shall be fully responsible for new replacement and shall not have the option of declaring that failures were caused by environmental conditions and its affect on the product. Contractor is fully responsible for assuring that Product Manufacturers are aware of this condition and that warranty statement is included in shop drawing submittals. Failure to do so will be at the Contractor's expense and at no additional cost to the Owner.

B. All critical warranted repairs shall be made within 24 hours of receipt of required parts from Manufacturer with reasonable delivery time of overnight shipping. Any repairs not completed within 5 working days from date of notice are subject to Owner making other arrangements for repair and back charging Contractor. This requirement is a condition of this contract.

C. Where equipment or instrument problems remain unresolved by Contractor beyond a reasonable time, a Factory Technician shall be provided on-site to take any corrective actions necessary to put equipment or instruments in operating order. Owner and Engineer reserve the right to determine a reasonable time for corrective action by Contractor.

D. A surge protection device that shows evidence of failure or incorrect operation during the warranty period shall be replaced free of charge. Since "Acts of Nature" or similar statements typically include the threat of lightning to which the surge protection devices shall be exposed, any such clause limiting warranty responsibility in the general conditions of this specification shall not apply to this section. The warranty shall cover the replacement of complete device. Surge protection devices with warranties that are meant to repair or supply replaceable parts shall not apply to this section

1.05 SUBMITTALS

A. The SPD submittals shall include, but shall not be limited to, the following information:

1. Data for each suppressor type indicating conductor sizes, conductor types, and connection configuration and lead lengths
2. Manufacturer's certified test data indicating the ability of the product to meet or exceed requirements of this specification
3. Drawings, with dimensions, indicating surge protection device mounting arrangement and lead length configuration, and mounting arrangement of any optional remote diagnostic equipment and assemblies
4. List and detail all protection systems such as fuses, disconnecting means and protective materials
5. Surge protection device wiring, bonding, and grounding connections shall be indicated on the wiring diagrams for each system. Include installation details demonstrating mechanical and electrical connections to equipment to be protected
6. If requested, a sample of each suppressor type shall be submitted for use in testing and evaluation.
7. Provide verification that the surge protection device complies with the required ANSI/UL 1449, Third Edition listing by Underwriters Laboratories (UL) or other Nationally Recognized Testing Laboratory (NRTL). Compliance may be in the form of a file number that can be verified on UL's website or on any other NTRL website, as long as the website contains the following information at a minimum: model number, surge protection device type, system voltage, phases, modes of protection, Voltage Protection Rating (VPR), and Nominal Discharge Current (I_n).
8. For side mount mounting applications (surge protection device mounted external to electrical assembly), Electrical/Mechanical drawings showing unit dimensions, weights, installation instruction details, and wiring configuration.

B. Provide six (6) copies for Engineer's review and approval.

C. The following information shall be submitted for record purposes:

1. Final As-Built drawings and information for items listed above and shall incorporate all changes made during the manufacturing process.

1.06 DELIVERY, STORAGE, AND HANDLING

A. Equipment shall be handled and stored in accordance with Manufacturer's instructions. One (1) copy of Manufacturer's instructions shall be included with the equipment at time of shipment.

1.07 OPERATION AND MAINTENANCE (O&M) MANUALS

A. O&M manuals shall be provided with each surge protection device shipped.

PART 2 P R O D U C T S

2.01 MANUFACTURERS

A. Eaton Cutler-Hammer

B. Pre-approved equal

2.02 VOLTAGE SURGE SUPPRESSION – GENERAL

A. Electrical Requirements:

1. Unit Operating Voltage – Refer to drawings for operating voltage and unit configuration.
2. Maximum Continuous Operating Voltage (MCOV) – The MCOV shall not be less than 125% of the nominal system operating voltage.
3. The suppression system shall incorporate thermally protected metal-oxide varistors (MOVs) as the core surge suppression component for the service entrance and all other distribution levels. The system shall not utilize silicon avalanche diodes, selenium cells, air gaps, or other components that may crowbar the system voltage leading to system upset or create any environmental hazards.
4. Protection Modes – The surge protection device must protect all modes of the electrical system being utilized. The required protection modes are indicated by bullets in the following table:

	Protection Modes			
Configuration	L-N	L-G	L-L	N-G
Wye	•	•	•	•
Delta	N/A	•	•	N/A
Single Split Phase	•	•	•	•
High Leg Delta	•	•	•	•

5. Nominal Discharge Current (In) – All surge protection devices applied to the distribution system shall have a 20kA In rating regardless of their surge protection device type (includes Types 1 and 2) or operating voltage. Surge protection devices having an I_n less than 20kA shall be rejected.
6. ANSI/UL 1449 Third Edition Voltage Protection Rating (VPR) – The maximum ANSI/UL 1449 Third Edition VPR for the device shall not exceed the following:

MODES	208Y/120	480Y/277	600Y/347
L-N; L-G; N-G	700	1200	1500
L-L	1200	2000	3000

B. Surge Protection Device Design:

1. Maintenance Free Design – The surge protection device shall be maintenance free and shall not require any user intervention throughout its life. Surge protection devices containing items such as replaceable modules, replaceable fuses, or replaceable batteries shall not be accepted. Surge protection devices requiring any maintenance of any sort such as periodic tightening of connections shall not be accepted. Surge protection devices requiring user intervention to test the unit via a diagnostic test kit or similar device shall not be accepted.
2. Balanced Suppression Platform – The surge current shall be equally distributed to all MOV components to ensure equal stressing and maximum performance. The surge suppression platform must provide equal impedance paths to each matched MOV. Designs incorporating replaceable surge protection device modules shall not be accepted.

3. Electrical Noise Filter – Each unit shall include a high-performance EMI/RFI noise rejection filter. Noise attenuation for electric line noise shall be up to 50 dB from 10 kHz to 100 MHz using the MIL-STD-220A insertion loss test method. Products unable able to meet this specification shall not be accepted.
4. Internal Connections – No plug-in component modules or printed circuit boards shall be used as surge current conductors. All internal components shall be soldered, hardwired with connections utilizing low impedance conductors.
5. Monitoring Diagnostics – Each surge protection device shall provide the following integral monitoring options:

    a. Protection Status Indicators - Each unit shall have a green / red solid-state indicator light that reports the status of the protection on each phase.

        1) For wye-configured units, the indicator lights must report the status of all protection elements and circuitry in the L-N and L-G modes. Wye configured units shall also contain an additional green / red solid-state indicator light that reports the status of the protection elements and circuitry in the N-G mode. Surge protection devices that indicate only the status of the L-N and L-G modes shall not be accepted.
        2) For delta-configured units, the indicator lights must report the status of all protection elements and circuitry in the L-G and L-L modes.
        3) The absence of a green light and the presence of a red light shall indicate that damage has occurred on the respective phase or mode. All protection status indicators must indicate the actual status of the protection on each phase or mode. If power is removed from any one phase, the indicator lights must continue to indicate the status of the protection on all other phases and protection modes. Diagnostics packages that simply indicate whether power is present on a particular phase shall not be accepted.

    b. Remote Status Monitor – The surge protection device must include Form C dry contacts (one NO and one NC) for remote annunciation of its status. Both the NO and NC contacts shall change state under any fault condition.
    c. Audible Alarm and Silence Button – The surge protection device shall contain an audible alarm that will be activated under any fault condition.

There shall also be an audible alarm silence button used to silence the audible alarm after it has been activated.

d. Surge Counter – The surge protection device shall be equipped with an LCD display that indicates to the user how many surges have occurred at the location. The surge counter shall trigger each time a surge event with a peak current magnitude of a minimum of 50 ± 20A occurs. A reset pushbutton shall also be standard, allowing the surge counter to be zeroed. The reset button shall contain a mechanism to prevent accidental resetting of the counter via a single, short-duration button press. In order to prevent accidental resetting, the surge counter reset button shall be depressed for a minimum of 2 seconds in order to clear the surge count total.

    1) The ongoing surge count shall be stored in non-volatile memory. If power to the surge protection device is completely interrupted, the ongoing count indicated on the surge counter's display prior to the interruption shall be stored in non-volatile memory and displayed after power is restored. The surge counter's memory shall not require a backup battery in order to achieve this functionality.

6. Overcurrent Protection: The unit shall contain thermally protected MOVs. These thermally protected MOVs shall have a thermal protection element packaged together with the MOV in order to achieve overcurrent protection of the MOV. The thermal protection element shall disconnect the MOV(s) from the system in a fail-safe manner should a condition occur that would cause them to enter a thermal runaway condition.
7. Fully Integrated Component Design – All of the surge protection device components and diagnostics shall be contained within one discrete assembly. Surge protection devices or individual surge protection device modules that must be ganged together in order to achieve higher surge current ratings or other functionality shall not be accepted.
8. Safety Requirements:

    a. The surge protection device shall minimize potential arc flash hazards by containing no user serviceable / replaceable parts and shall be maintenance free. Surge protection devices containing items such as replaceable modules, replaceable fuses, or replaceable batteries shall not be accepted.

Surge protection devices requiring any maintenance of any sort such as periodic tightening of connections shall not be accepted. Surge protection devices requiring user intervention to test the unit via a diagnostic test kit or similar device shall not be accepted.

b. surge protection devices designed to interface with the electrical assembly via conductors shall require no user contact with the inside of the unit. Such units shall have any required conductors be factory installed.

c. Side mount surge protection devices shall be factory sealed in order to prevent access to the inside of the unit. Side mount surge protection devices shall have factory-installed phase, neutral, ground and remote status contact conductors factory installed and shall have a pigtail of conductors protruding outside of the enclosure for field installation.

2.03 SYSTEM APPLICATION

A. The surge protection device applications covered under this section include distribution and branch panel locations, busway, motor control centers (MCC), switchgear, and switchboard assemblies. All surge protection devices shall be tested and demonstrate suitability for application within ANSI/IEEE C62.41 Category C, B, and A environments.

B. Surge Current Capacity – The minimum surge current capacity the device is capable of withstanding shall be as shown in the following table:

Minimum surge current capacity based on ANSI / IEEE C62.41 location category			
Category	Application	Per Phase	Per Mode
C	Service Entrance Locations (Switchboards, Switchgear, MCC, Main Entrance)	250 kA	125 kA
B	High Exposure Roof Top Locations (Distribution Panelboards)	160 kA	80 kA
A	Branch Locations (Panelboards, MCCs, Busway)	120 kA	60 kA

C. Surge Protection Device Type: All surge protection devices installed on the line side of the service entrance disconnect shall be Type 1 surge protection devices. All surge protection devices installed on the load side of the service entrance disconnect shall be Type 1 or Type 2 surge protection devices.

2.04 LIGHTING AND DISTRIBUTION PANELBOARD REQUIREMENTS

A. The surge protection device application covered under this section includes lighting and distribution panelboards. The surge protection device units shall be tested and demonstrate suitability for application within ANSI/IEEE C62.41 Category B environments.

1. The surge protection device shall not limit the use of through-feed lugs, sub-feed lugs, and sub-feed breaker options.
2. Surge protection devices shall be installed immediately following the load side of the main breaker. Surge protection devices installed in main lug only panelboards shall be installed immediately following the incoming main lugs.
3. The panelboard shall be capable of re-energizing upon removal of the surge protection device.
4. The surge protection device shall be interfaced to the panelboard via a direct bus bar connection. Alternately, a surge protection device connected to a 30A circuit breaker for disconnecting purposes may be installed using short lengths of conductors as long as the conductors originate integrally to the surge protection device. The surge protection device shall be located directly adjacent to the 30A circuit breaker.
5. The surge protection device shall be included and mounted within the panelboard by the manufacturer of the panelboard.
6. The surge protection device shall be of the same manufacturer as the panelboard.
7. The complete panelboard including the surge protection device shall be UL67 listed.

B. Sidemount Mounting Applications Installation (surge protection device mounted external to electrical assembly)

1. Lead length between the breaker and suppressor shall be kept as short as possible to ensure optimum performance. Any excess conductor length shall be trimmed in order to minimize let-through voltage. The installer shall comply with the manufacturer's recommended installation and wiring practices.

C. Switchgear, Switchboard, MCC, and Busway Requirements:

1. The surge protection device application covered under this section is for switchgear, switchboard, MCC, and busway locations. Service entrance located surge protection devices shall be tested and demonstrate suitability for application within ANSI/IEEE C62.41 Category C environments.
2. The surge protection device shall be of the same manufacturer as the switchgear, switchboard, MCC, and busway.
3. The surge protection device shall be factory installed inside the switchgear, switchboard, MCC, and/or bus plug at the assembly point by the original equipment manufacturer
4. Locate the surge protection device on the load side of the main disconnect device, as close as possible to the phase conductors and the ground/neutral bar.
5. The surge protection device shall be connected through a disconnect (30A circuit breaker). The disconnect shall be located in immediate proximity to the surge protection device. Connection shall be made via bus, conductors, or other connections originating in the surge protection device and shall be kept as short as possible.
6. The surge protection device shall be integral to switchgear, switchboard, MCC, and/or bus plug as a factory standardized design.
7. All monitoring and diagnostic features shall be visible from the front of the equipment.

2.05 ENCLOSURES

A. All enclosed equipment shall have NEMA 1 general-purpose enclosures, unless otherwise noted. Provide enclosures suitable for locations as indicated in Specification Section 16012 – "Electrical Work," Item 2.01, Paragraph C or on the drawings, and as described below:

1. NEMA 1 – Constructed of a polymer (units integrated within electrical assemblies) or steel (sidemount units only), intended for indoor use to provide a degree of protection to personal access to hazardous parts and provide a degree of protection against the ingress of solid foreign objects (falling dirt).

2. NEMA 4 – Constructed of steel intended for either indoor or outdoor use to provide a degree of protection against access to hazardous parts; to provide a degree of protection of the equipment inside the enclosure against ingress of solid foreign objects (dirt and windblown dust); to provide a degree of protection with respect to the harmful effects on the equipment due to the ingress of water (rain, sleet, snow, splashing water, and hose directed water); and that will be undamaged by the external formation of ice on the enclosure.
3. NEMA 4X – Constructed of 304 stainless steel (304 is a specific requirement).

PART 3 EXECUTION

3.01 INSTALLATION

A. The Manufacturer shall submit a written statement indicating that a factory technician has inspected the installation. The installing contractor shall submit a checkout memorandum to the manufacturer.

The memorandum shall indicate the date the equipment is placed into service and the actual method of installation. Submit three copies to the specifying engineer.

B. The installation of surge protection devices within or on electrical distribution equipment shall in no way compromise or violate equipment listing, labeling, or warranty of the distribution equipment.

C. Surge protection device shall use a separate path to building ground; the equipment safety ground is not to be used as a transient voltage ground path.

D. The installing contractor shall install the parallel surge protection device with short and straight conductors as practically possible.

E. The contractor shall follow the Surge Protection Device Manufacturer's recommended installation practice as found in the equipment installation instructions.

F. The installation shall adhere to all applicable codes.

G. Route fail alarm circuits to autodialer and to PLC.

H. The Contractor shall install all equipment per the Manufacturer's recommendations and the contract drawings.

3.02 INSTALLERS

A. Installers of low-voltage lightning arresters shall be knowledgeable, and if required, certified, in all applicable electrical practices, standards, codes and wiring techniques as they pertain to installing surge suppressors.

B. Installers shall follow all applicable safety standards.

C. Installers shall follow manufacturer's installation instructions.

D. Installer shall mount surge protection device devices to keep phase and ground conductor as short as possible and free of sharp bends in conductors. Phase conductors to be equal length. Installer shall make corrections to installation as directed by Engineer.

3.03 FACTORY TESTING

A. Standard factory tests shall be performed on the equipment under this section. All tests shall be in accordance with the latest version of NEMA and UL standards.

END OF SECTION

SECTION 16402

UNDERGROUND DUCTBANKS

PART 1 GENERAL

1.01 SECTION INCLUDES

A. Underground electrical ductbanks.

1.02 REFERENCES

A. National Fire Protection Association (NFPA): No. 70 - National Electrical Code (NEC) Appendix B.

1.03 SUBMITTALS

A. Catalog cut sheets of the ducts and spacers.

1.04 DELIVERY, STORAGE AND HANDLING

A. Have duct spacers and associated hardware packed and crated to avoid damage during shipment and handling.

B. Clearly mark packages or crates stating that the material is for electrical ductbanks only.

PART 2 PRODUCTS

2.01 ACCEPTABLE MANUFACTURERS

A. Thomas and Betts.

B. Underground Devices Inc.

C. Walker Division, Butler Manufacturing Company.

2.02 MATERIALS AND EQUIPMENT

A. Conduit. Construct ducts using schedule 80 rigid PVC conduit. Refer to Section 16111 - Conduit, Fittings and Bodies.

B. Spacers. Secure conduit with non-magnetic, universal, interlocking-type spacers for both horizontal and vertical duct arrangements.

C. Concrete. Use steel reinforced, red concrete as duct encasement. Refer to Section 03100 Concrete Formwork.

PART 3 EXECUTION

3.01 PREPARATION

A. Verify from Drawings and field survey that the location of ductbanks does not interfere with any existing or new underground facilities.

B. Verify that materials are on site in proper condition and that sufficient quantity is on hand for the work.

C. Verify that trenches are in the correct places and prepared with sufficient depth and width to accommodate the ductbanks, reinforcing rod, and concrete.

D. Be prepared for inspection of the ductbanks before reinforcing rod is installed.

E. Before pouring concrete, verify that the ducts are free of debris and properly installed in the support and spacer systems and that the ducts are properly fitted together and firmly held in place by the hold down hardware.

F. Provide 24-hour notice to Project Manager, Wastewater Inspectors and the Local Code Inspector for cover-up inspection before pouring electrical conduit ductbanks.

3.02 INSTALLATION

A. Use the size and types of conduit as indicated on the Drawings for the various ductbanks required for the project.

B. Make ductbank installations and penetrations through foundation walls watertight.

C. Assemble ductbanks using non-magnetic saddles, spacers and separators. Position separators to provide 2-inch minimum concrete separation between the outer surfaces of the conduits.

D. Provide a 3-inch minimum concrete covering on both sides, top and bottom of concrete envelopes around conduits. Add red dye at the rate of 10 pounds per cubic yard to concrete used for envelopes for easy identification during subsequent excavation.

E. Firmly fix ducts in place during pouring of concrete. Carefully spade and vibrate the concrete to ensure filling of spaces between ducts.

F. Make bends with sweeps of radius not less than 6 times the smallest diameter of the raceway.

G. Make a transition from non-metallic to pvc-coated metallic rigid conduit where ductbanks enter structures or turn upward for continuation above grade.

H. Make bends of 30 degrees or more using rigid galvanized steel.

I. Reinforce ductbanks throughout, where indicated on the Drawings.

1. Unless otherwise noted on the Drawings, reinforce with No. 5 longitudinal steel bars placed at each corner and along each face at a maximum parallel spacing of 12 inches on centers, and No. 5 tie-bars transversely placed at 18-inch maximum longitudinal intervals.
2. Maintain a maximum clearance of 2 inches from bars to the edge of the concrete encasement.

J. Where ducts enter structures such as handholes, manholes, pullboxes, or buildings, terminate the ducts in suitable end bells, insulated L-bushings, Meyers hubs or couplings on steel conduits. Tag conduit entering pull boxes with stamped, stainless steel tags. Identify as designated in cable and conduit schedule.

K. Do not backfill with material containing large rock, paving materials, cinders, large or sharply angular substances, corrosive material, or other materials which can damage or contribute to corrosion of ducts or prevent adequate compaction of fill.

L. Install a bare stranded copper ductbank ground in each ductbank envelope. Make ground electrically continuous throughout the entire ductbank system. Connect ground to switchgear and MCC ground buses and to steel conduit extensions of the underground duct system.

M. After completion of the ductbank and prior to pulling cable, pull a mandrel, not less than 12 inches long and with a cross section approximately one-fourth inch less than the inside cross section of the duct, through each duct.

Then pull a rag swab or sponge through to remove any particles of earth, sand or gravel that may have been left in the duct. Repull the rag or sponge swab until the swab emerges clean.

N. Use hemp rope to pull conductors into PVC conduit. Do not use nylon or wire cable for this purpose.

O. Install a warning ribbon approximately 12 inches below finished grade over underground ductbanks. Refer to Section 16195 - Electrical Identification.

P. For manholes and pull boxes below grade, install wire racks to support cables properly around the perimeter and keep them dry.

Q. For manholes and pull boxes below grade, construct a french drain, or other drainage as detailed on the Drawings.

END OF SECTION

SECTION 16410

LOW VOLTAGE POWER FACTOR CORRECTION CAPACITORS

PART 1 G E N E R A L

1.01 SECTION INCLUDES

A. Specifications for low voltage power factor correction capacitors.

1.02 REFERENCES

A. American National Standards Institute/National Electrical Manufacturers Association (ANSI/NEMA)

1. NEMA CP-1: Shunt Capacitors
2. NEMA ICS-2: Industrial Control Devices, Controllers and Assemblies

B. American National Standards Institute/National Fire Protection Association (ANSI/NFPA): NFPA No. 70 - National Electrical Code (NEC) Article 460 - Capacitors.

C. American National Standards Institute/Institute of Electrical and Electronic Engineers (ANSI/IEEE): Standard No. 18 - Standard for Shunt Power Capacitors.

D. Underwriters Laboratories, Inc. (UL): UL 810 - Capacitors.

E. Power factor correction system shall comply with Houston Lighting and Power (H&LP) standard for harmonic distortion.

1.03 SUBMITTALS

A. Submit the following under provisions of Section 01330 – Submittal Procedures:

1. Mounting dimensions and instructions
2. Equipment weights
3. Catalog data
4. Electrical schematics and wiring diagrams for control devices
5. Operating instructions for controls

1.04 QUALITY ASSURANCE

A. Tests

1. Perform tests in accordance with ANSI/NEMA CP-1. Each capacitor shall be subjected to manufacturing testing as described in ANSI/UL 810. Have test or inspections performed and evaluated by qualified personnel. Document deficiencies observed during the testing process and correct them prior to shipment.
2. Tests required include: short-time over voltage test, capacitance test, leak test and dissipation factor test.
3. Run a functional test on factory assembled automatic units.

1.05 DELIVERY, STORAGE AND HANDLING

A. Have capacitors packed and crated to permit ease of handling and to provide protection from damage during shipping, handling and storage.

PART 2 P R O D U C T S

2.01 ACCEPTABLE MANUFACTURERS

A. ABB Power T&D Company, Inc.

B. ASC Industries

C. Commonwealth Sprague Capacitor, Inc.

D. General Electric Company

E. Square D Company

2.02 MATERIALS AND EQUIPMENT

A. Capacitor Requirements

1. The capacitors shall provide power factor correction for individual motors 15 horsepower and above in the system by connecting each capacitor to the load side of the respective motor starter, or automatically switching capacitor banks on and off in accordance with the need for reactive power. See Drawings and one-line diagrams for details.

2. Use capacitors meeting the requirements stipulated in NEMA CP-1 and IEEE Standard No. 18.
3. The capacitor total losses shall not exceed 0.5 W per kVAR.
4. Select capacitors with permanently connected discharge resistors in full compliance with NEC Article 460-6(a) and (b).
5. Use capacitors which are the fused, fixed-type with multiple cells with dry-type dielectric enclosed in a stainless steel unpainted enclosure.
6. When individual motor circuits are equipped with power factor correction capacitors, connect the capacitors to the circuit between the contactor and the overload relay so as not to affect the true value of the motor current going through the overload relay heater coils.
7. Provide necessary mounting brackets and hardware of stainless steel with the capacitors.
8. When called for on the one-line diagrams, provide the power factor correction by an automatic capacitor bank.
9. Connect the capacitor bank to the main power supply bus immediately down-stream from the ammeter and voltmeter in the motor control center.
10. Select individual capacitors as described for the individual motor power factor correction capacitor.
11. Use a capacitor bank with a modular design to allow for expansion by adding capacitor units and control devices.
12. Mount capacitors and control system in an enclosure suitable for the environment and as specified in Section 16160 - Cabinets and Enclosures.

    a. If installed outside, provide a NEMA 3 gasketed enclosure.
    b. If installed inside a building, provide a NEMA 12 enclosure.
    c. Mount capacitors on wall above indoor motor control centers.
    d. If a motor control center is part of the plant design, install controls for the automatic power factor correction capacitors in a motor control center section.

B. Automatic Power Factor Control: Where specified, provide controls to permit an operator to select a target power factor adjustable to any value between 0.95 leading and 0.80 lagging. The controls continuously sense the power factor on the circuit being corrected and, when it differs from the target setting for more than 10 seconds, operate a contactor to switch a capacitor bank into or out of the circuit. Contactors are opened or closed as required to bring the corrected circuit power factor closer to the target setting. Only one capacitor bank is switched at a time.

C. Controls. The controls for the automatic power factor correction shall comply with NEMA ICS-2 with quantities, ratings, mounting provisions and sensing, and power connections as shown on the one-line diagrams. System features and components shall include:

1. Basic control system: solid-state microprocessor-based.
2. Three-pole 600-volt rated contactors for repetitive high-inrush-switching duty presented by capacitor loading.
3. Fuses or circuit breakers for protection of wiring, contactors and capacitors.
4. Air-core-type inductors mechanically braced to withstand the maximum fault current available at the point of application may be installed in the capacitor circuit to limit switching surges to within contactor ratings.
5. Indicating lights designating energized capacitor banks.
6. The power bus, when required, shall be tin plated copper and braced for available fault current.
7. Interlock enclosure doors to deenergize capacitors when doors are opened.
8. A switchboard type power factor meter with 0.5 lagging to 0.5 leading and plus or minus one percent accuracy.
9. A main circuit breaker operable from outside the enclosure which can deenergize the entire system inside the enclosure. Arrange breaker for pad-locking.
10. Capacitor failure alarm relay with one form C contact for connection by City.

PART 3 EXECUTION

3.01 PREPARATION

A. Factory Assembled Unit. Verify dimensions of the housekeeping pad and the embedded leveling channels and conduit stub-ups if applicable.

B. Individual Capacitor for Each Motor. Verify dimensions of the capacitor mounting rack to ensure proper fit and accessibility for wiring and maintenance.

C. Controls in Motor Control Center - Capacitors separately mounted. Verify content of Motor Control Center section to ensure correct power and control devices and wiring.

3.02 INSTALLATION

A. Install equipment and wire up in accordance with the manufacturer's published instructions.

B. Torque bus bar bolts and cable connections to manufacturer's recommendations and tighten nuts and bolts on steel enclosures to ensure structural integrity.

C. Locate capacitors to allow adequate ventilation around the enclosures.

END OF SECTION

SECTION 16461

DRY-TYPE TRANSFORMERS

PART 1 GENERAL

1.01 SECTION INCLUDES

A. Specifications for dry-type transformers for the following applications:

1. Motor drive isolation
2. Shielded isolation
3. Non-linear loads
4. General purpose

1.02 REFERENCES

A. American National Standards Institute/National Electrical Manufacturers Association (ANSI/NEMA)

1. ANSI No. C89.2: Transformers
2. NEMA ST 1: Specialty Transformers
3. NEMA ST-20: Dry-Type Transformers for General Applications

B. Underwriters Laboratories (UL): UL 506 - Standard for Safety Specialty Transformers.

C. American National Standards Institute/National Fire Protection Association ANSI/NFPA): NFPA No. 70 -National Electrical Code (NEC); Article 450 - Transformers and Transformer Vaults.

1.03 SUBMITTALS

A. Submit the following under provisions of Section 01330 – Submittal Procedures:

1. Outline dimensions, support points and unit weight.
2. Electrical characteristics, including impedance and tap configuration.
3. Insulation type, rated temperature rise, and total insulation system.
4. Test reports, for transformers 300 KVA and above, indicating losses at 25, 50, 75 and 100 percent rated load and sound levels.
5. Connection diagrams.
6. Catalog data.
7. Operation and maintenance data.

1.04 QUALITY ASSURANCE

A. Tests. Run manufacturer's test on transformers in accordance with Underwriters Laboratories (U.L.) Standard No. UL-506.

1.05 DELIVERY, STORAGE AND HANDLING

A. Have transformers individually packed and crated to permit ease of handling and to provide protection from damage during shipping, handling and storage.

PART 2 P R O D U C T S

2.01 ACCEPTABLE MANUFACTURERS

A. ACME Transformer

B. Cutler-Hammer

C. General Electric

D. Hevi-Duty

E. Westinghouse Electric

F. Square D Company

2.02 MATERIALS AND EQUIPMENT

A. Use dry-type transformers for lighting system or other general purpose applications, motor drive isolation, shielded isolation and non-linear load requirements.

B. Provide transformers with copper windings.

C. Select transformers designed and constructed in accordance with NEMA ST-1, NEMA ST-20 and the NEC Article 450.

D. For applications up to 30 KVA, use transformers that are encapsulated, non-ventilated type with 115 degree C temperature rise and 185 degree C insulation class.

E. Provide transformers with full capacity winding taps a minimum of two 2-1/2 percent above and two 2-1/2 percent below normal voltage.

F. For applications of 30KVA and above use transformers that are the drip-proof ventilated type for indoor mounting only.

G. Use transformers with sound levels in accordance with NEMA ST-20.

H. Basic impulse level (BIL) shall be 10KV for transformers less than 300 KVA, 30KV for transformers 300KVA and larger.

I. Ground core and coil assembly to enclosure by means of a visible flexible copper strap.

J. Provide transformers with lifting eye bolts or brackets.

K. Provide transformer nameplates of stainless steel, marked in accordance with NEC Article 450-11. Fasten nameplate to the transformers with stainless steel screws or rivets.

L. Refer to the one-line diagram or the Drawings for transformer size, volt and wire configuration.

M. Special purpose transformers shall be as follows:

1. Motor drive isolation transformers: designed for 3-phase SCR controlled, variable speed motor voltages with bracing to withstand stresses associated with motor drives.
2. Shielded isolation transformers shall be designed for power inputs to microprocessors and computers that require additional protection from electrical disturbances with the use of grounded electrostatic shielding.
3. Non-linear transformers shall be designed to withstand the heating effects caused by harmonics resulting from non-linear, non-sinusoidal loads. Use K-rated transformers for non-linear loads.

PART 3 EXECUTION

3.01 PREPARATION

A. Verify dimensions of housekeeping pads or other support structures to ensure proper fit.

B. Verify raceway and wiring drawings that are prepared for the transformers and check them against the manufacturer's information.

C. Verify that the protective devices planned for the transformers are in accordance with NEC Article 450.

3.02 INSTALLATION

A. Install transformers plumb and level and in accordance with manufacturer's instructions and the NEC Article 450.

B. Use flexible conduit for connection to transformer case. Make conduit connections to side panel of enclosure.

C. Mount transformers on isolation pads as required to isolate transformer noise from the buildings structure.

D. Wire transformer primary and secondary in accordance with the nameplate instructions and the designated voltages as shown on the one-line diagram.

END OF SECTION

SECTION 16476

DISCONNECTS AND CIRCUIT BREAKERS

PART 1 GENERAL

1.00 CONDITIONS

A. This copyright protected © specification is issued confidentially for this specific project only. Reproduction of this document for any other purpose is prohibited.

B. Refer to Section 16012 - "Electrical Work" for additional requirements. Failure to do so will be at expense of Contractor and at no additional cost to Owner.

C. Fusible switches are allowed only where specifically shown on Plans for this project, or where approved in writing by Engineer.

1.01 SUMMARY

A. Section Includes:

1. Service disconnects.
2. Feeder and equipment disconnects.
3. Enclosed circuit breakers

1.02 SUBMITTALS

A. Submit the following for Engineer's approval.

B. Product Data:

1. Submit for switches, circuit breakers, and accessories.
2. Descriptive data and time-current curves for protective devices and let-through current curves for those devices with current-limiting characteristics. Include coordination charts and tables, and related data.

C. Shop Drawings: Wiring diagrams detailing power and control wiring and differentiating clearly between manufacturer-installed wiring and field-installed wiring.

D. Test Results: Field test reports indicating and interpreting test results.

E. Operating and Maintenance Data: Maintenance data for tripping devices

F. With each submittal, include a copy of the applicable specification(s) page(s) for the item submitted and mark "Complies" or "Non-Compliance" or "Exception" adjacent to the applicable paragraph. Identify applicable drawing sheet number and specification section on front of each submittal cover.

G. Coordination: Contractor shall determine size, horsepower, voltage, and phase of all equipment and motors supplied and shall adjust breaker and fused switch size accordingly and shall note on submittals. Failure to do so will be at expense of Contractor and at no additional cost to Owner.

1.03 QUALITY ASSURANCE

A. Items provided under this section shall be listed or labeled by UL or other Nationally Recognized Testing Laboratory (NRTL).

1. Term "NRTL" shall be as defined in OSHA Regulation 1910.7.
2. Terms "listed" and "labeled" shall be as defined in National Electrical Code, Article 100.

B. Regulatory Requirements:

1. National Electrical Code (NEC): Components and installation shall comply with National Fire Protection Association (NFPA) 70.

C. Single-Source Responsibility: Enclosed switches and circuit breakers shall be product of single manufacturer.

PART 2 P R O D U C T S

2.01 MANUFACTURERS

A. Fusible Switches:

1. Square D Co.
2. Eaton Corp. /Cutler-Hammer Products

B. Fused Power Circuit Devices:

1. Square D Co.
2. Boltswitch

C. Molded-Case Circuit Breakers:

1. Square D Co.
2. Eaton Corp. /Cutler-Hammer Products

D. Combination Circuit Breaker and Ground Fault Trip:

1. Square D Co.
2. Eaton Corp. /Cutler-Hammer Products

E. Molded-Case Current-Limiting Circuit Breakers:

1. Square D Co.
2. Eaton Corp. /Cutler-Hammer Products

F. Other Manufacturers that are pre-approved in writing.

2.02 ENCLOSED SWITCHES

A. Enclosed Non-fusible Switch: NEMA KS 1, Type HD handle lockable with 2 padlocks

B. Enclosed Fusible Switch, 800 Amperes and Smaller: NEMA KS 1, Type HD, clips to accommodate specified fuses, enclosure consistent with environment where located, handle lockable with two (2) padlocks, and interlocked with cover in CLOSED position.

C. Enclosed Fusible Switch Larger Than 800 Amperes: Bolted-pressure or high-pressure contact switch, bus drilled to accommodate specified fuses, enclosure consistent with environment where located.

1. Minimum Fault Current Rating: 100,000 symmetrical rms amperes.

D. All enclosures located outdoors or where subject to wet or environmentally harsh locations shall be NEMA 4X 316 stainless steel.

E. All switches shall be rated at 600 volts minimum.

F. Handle operator mechanisms shall be on side of enclosure and not on front. Keyed mechanisms that separate handle from breaker mechanism when door is opened are not acceptable.

2.03 ENCLOSED CIRCUIT BREAKERS

A. Enclosed Molded-Case Circuit Breaker: NEMA AB 1, handle lockable with 2 padlocks

B. Characteristics:

1. Frame size, trip rating, number of poles, and auxiliary devices as indicated

2. Interrupting capacity rating to meet available fault current, 10,000 symmetrical rms amperes minimum
3. Appropriate application listing when used for switching fluorescent lighting loads or heating, air conditioning, and refrigeration equipment.

C. All enclosures located outdoors or where subject to wet or environmentally harsh locations shall be NEMA 4X 316 stainless steel.

2.04 ACCESSORIES

A. Solidstate breaker requiring programming unit for settings adjustment

1. Provide new programming unit and all accessories for Owner and Engineers use. Turn over to Engineer for review and testing.
2. Original set-up and adjustments shall be performed by the Circuit Breaker Manufacturers Factory Representative.

2.05 TRIP UNITS

A. All service and feeder breakers to have replaceable trip plugs, or be adjustable (load current), or be electric type with adjustable trips.

PART 3 E X E C U T I O N

3.01 INSTALLATION

A. Install enclosed switches and circuit breakers in locations as indicated, according to manufacturer's written instructions.

B. Install enclosed switches and circuit breakers level and plumb.

C. Install wiring between enclosed switches and circuit breakers and control/indication devices.

D. Connect enclosed switches and circuit breakers and components to wiring system and to ground as indicated and instructed by manufacturer. Tighten connectors and terminals, including screws and bolts according to equipment manufacturer's published torque tightening values for equipment connectors. Where manufacturer's torquing requirements are not indicated, tighten connectors and terminals according to tightening torques specified in UL Standard 486A.

3.02 FIELD QUALITY CONTROL

A. Manufacturer's Field Services: Supplier's or manufacturer's representative for equipment specified herein shall be present at job site or for assistance during plant construction, plant startup, and training of Owner's personnel for plant operation.

B. Testing: After installing enclosed switches and circuit breakers and after electrical circuitry has been energized, demonstrate product capability and compliance with requirements.

1. Procedures: Perform each visual and mechanical inspection and electrical test stated in NETA Standard ATS, Section 7.5 for enclosed switches and Section 7.6 for molded-case circuit breakers. Certify compliance with test parameters.
2. Correct malfunctioning units at site, where possible, and retest to demonstrate compliance; otherwise, remove and replace with new units, and retest.

C. Training:

1. Train Owner's maintenance personnel on procedures and schedules for startup and shutdown, troubleshooting, servicing, and preventive maintenance.
2. Review operating and maintenance data.

3.03 ADJUSTING

A. Set field-adjustable enclosed switches and circuit breaker trip ranges as indicated.

3.04 CLEANING

A. After completing system installation including outlet fittings and devices, inspect exposed finish. Remove burrs, dirt, and construction debris and repair damaged finish including chips, scratches, and abrasions.

END OF SECTION

SECTION 16480

MOTOR CONTROL CENTER

PART 1 GENERAL

1.01 SECTION INCLUDES

A. Specification for low voltage motor control center (MCC).

1.02 REFERENCES

A. American National Standards Institute/National Electrical Manufacturers Association (ANSI/NEMA)

1. ICS 1: General Standards for Industrial Control and Systems
2. ICS 2: Industrial Control Devices, Controllers and Assemblies
3. ICS 4: Terminal Blocks for Industrial Use

B. American National Standards Institute/Underwriters Laboratories, Inc. (ANSI/UL)

1. 467: UL Standard for Safety, Grounding and Bonding Equipment
2. 489: UL Standard for Safety, Molded-Case Circuit Breakers and Circuit-Breaker Enclosures
3. 506: UL Standard for Safety, Specialty Transformers
4. 845: UL Standard for Safety, Motor Control Centers

C. American National Standards Institute/National Fire Protection Association (ANSI/NFPA): 70 National Electrical Code (NEC).

1.03 SUBMITTALS

A. Submit the following under the provisions of Section 01330 – Submittal Procedures:

1. Outline drawings with elevations
2. Equipment arrangement drawings
3. Anchor bolt location drawings
4. Electrical schematics and wiring diagrams
5. Current, potential, and power transformer curves
6. Electrical fuse/circuit breaker characteristic
7. Equipment performance curves and data

8. Bill of installation/assembly materials
9. Equipment weights
10. Completed manufacturer's data sheets
11. Catalog data
12. Assembly/disassembly sizes and weights
13. Nameplate data
14. Performance/acceptance test report
15. Operation and maintenance data

1.04 QUALITY ASSURANCE

A. Tests. Perform tests in accordance with ANSI/NEMA ICS 2-322.22. Test each MCC as described in ANSI/UL 845. Make available upon request certified temperature and short-circuit test data, and a certificate of circuit breaker conformance with ANSI C37.16. Have tests and inspections performed and evaluated by qualified personnel. Document and correct deficiencies observed during the testing process prior to shipment.

1.05 DELIVERY, STORAGE AND HANDLING

A. Upon completion of the manufacture and assembly of the MCC and before crating for shipment, have parts that are disassembled match marked to facilitate installation in the field. Pack and crate parts in such a way to permit ease of handling.

B. Equip MCC shipping sections with lifting facilities so that may be easily unloaded and handled, either by crane or forklift.

C. Do not exceed 120 inches in length for shipping sections. Have equipment packed, crated, and rigidly braced to protect it from damage during shipment, handling, and outdoor storage. Make provision to energize the space heater of each shipping section during storage at the jobsite. Make a connection point readily available without uncrating the equipment and clearly tag each shipping section to locate the connection and identify the electrical service required.

PART 2 P R O D U C T S

2.01 ACCEPTABLE MANUFACTURERS

A. Allen-Bradley

B. Cutler-Hammer/Westinghouse

C. General Electric

D. Powell Electrical Manufacturing Company

E. Siemens Energy and Automation, Inc.

F. Square D Company

G. Toshiba

2.02 MATERIALS AND EQUIPMENT

A. Design. Provide an MCC with the following design characteristics:

1. The MCC construction and wiring shall be NEMA Class I, Type B as specified in ANSI/NEMA ICS-2-322.08 and ICS-2-322.10. Provide an MCC designed for 3-phase, 60 Hz, 480-Volt service with main horizontal and vertical bus ampacities and short circuit bracing as specified on the one-line diagram.
2. Furnish an MCC designed to operate in service conditions described in NEMA ICS 1 and as shown on the one-line diagram.
3. Supply motor starters suitable for full voltage starting unless otherwise noted on the one-line diagram.
4. Construct the MCC of one or more vertical sections bolted together to form a free standing assembly, designed to permit future additions, changes, or regrouping of units.
5. Provide motor control units of the combination type, consisting of a motor circuit protector (MCP), a magnetic starter and a control power transformer. Size the MCP and starter in accordance with manufacturer's recommendation for the starter and motor size indicated on the one-line diagram.
6. When power factor correction capacitor is called for, connect its wiring to the line side of the overload relay with a set of fuses, a circuit breaker, or other acceptable means to serve as overload protection for the wiring and capacitor.
7. Manufacture main breaker (if used) and feeder breakers of the molded case, thermal-magnetic type to be mounted and wired in accordance with ANSI/UL 489.
8. If called for on the one-line-diagram, locate the lighting panelboard, transformer and transformer feeder breaker in the same vertical section. Supply a transformer with 115 degrees C temperature rise, installed in accordance with ANSI/UL 506.

B. Construction. Construct the MCC of self-supporting and fully enclosed metal clad section for mounting of motor starters, circuit breakers and necessary accessories including bus bars, control transformers, control switches, ground bus, and control wiring, as specified in this section and shown on the one-line diagram.

C. Enclosures

1. Construct each MCC enclosure to be fully metal enclosed, dead front, free standing, and NEMA 12 suitable for indoor service as defined in ANSI/UL 845 or NEMA 3R suitable for outdoor installation when indicated on the one-line diagram. Fabricate enclosure of sheet steel not less than 14 gauge with rear and end covers not less than 16 gauge; with adequate strength to withstand stresses imposed by short circuit current, shipping, handling, installation, and operation, without distortion or damage.
2. Construct frames of the enclosure structure with continuous steel barriers, extending from the front to the rear of each compartment for the controller units, buses and power cables.
3. Provide enclosures of suitable size for reduced voltage starting auto transformers and associated wiring, if required.

D. Vertical Sections

1. Make the structure 20 inches deep. Nominal vertical section dimensions are 20 inches wide by 90 inches high. Design each vertical section to accommodate not more than six NEMA Size 1 combination motor control units mounted one above the other in front-mounted arrangement.
2. Provided horizontal wiring space at the top and the bottom of each vertical section, which will line up with adjacent sections to form continuous raceways through the entire length of the MCC. In addition, in standard sections include vertical wireways with hinged doors for unit wiring. Provide grommets at points wiring must cross cut-outs.
3. Use section structure designed for top or bottom cable entry as indicated on the one-line diagram. Provide adequate ventilation and heating facilities for each section to keep the maximum temperature rise and humidity within the acceptable limits.

E. Incoming Feed

1. Terminate incoming feeder cables in a main breaker or main lugs. Use top feed to main breakers whether either top or bottom MCC cable entry is specified.
2. The MCC will be fed from one 480V source, unless otherwise stated. Provide the necessary space for adequate bending radius and spreading room to properly train and terminate the cables specified on the Drawings. Where large (350 MCM and above) or parallel cables are used as feeders, provide a separate termination compartment along side the main breaker for cable entry.
3. Provide a separate compartment with a hinged front access door and suitable space for terminations for incoming cables. Provide compression type lugs in the quantity shown on the diagram. Allow space for a cable bending radius not less than ten times the diameter of the cable. The cable size is shown on the one-line diagram. Install current transformers and phase monitor coils in this compartment on fixed horizontal mounting brackets. Do not loosely place coils around feeder cables.
4. Furnish surge arresters as specified in Section 13446 - Primary Instrumentation Devices, located downstream from the main breaker or lugs. Mount surge arresters in an isolated, completely enclosed cubicle.
5. When shown on the one-line diagram, install a voltmeter and an ampere-meter with switches in the incoming feed section. Provide meters of the switchboard type with one percent accuracy, 4-1/2 inch diameter face with a minimum of 240 degree direct reading scale.

F. Combination Starter Unit

1. Provide a standard combination motor starter unit which consists of a motor circuit protector (MCP), a magnetic motor starter, and an overload relay. Install starter and circuit protective device and control power transformer in a plug-in unit. The ratings of the components are shown on the one-line diagram.
2. Provide motor starters conforming to NEMA standards for the horsepower of the motors with which they are to be used and which are suitable for full voltage, across-the-line starting. Select starters with pickup and dropout voltages of not greater than 85 percent and 60 percent of rated voltage, respectively. Do not use a starter smaller than NEMA Size 1.
3. For NEMA size 4 and larger, provide vacuum-type contactors.
4. Select overload relays designed so that any attempt for reset immediately after operation cannot result in damage to the unit.

Provide running protection for the motor and all other series components, based upon the tripping characteristics of the overload relay.

5. Utilize motor overload relays of the solid state type with adjustable overload, phase unbalance and phase failure sensitivity.
6. Starters shall have a minimum of one NC and one NO auxiliary contacts in addition to the seal-in contact.
7. Have reversing contactors and 2-speed starters both mechanically and electrically interlocked to prevent both contactors from being engaged at one time.
8. Provide an MCP of the magnetic type with a fault interrupting capability suitable for the complete starter unit.
9. Provide each combination starter unit with its own control power transformer with Class B insulation and 120 volt secondary.
10. Place fuses on the secondary side of control power transformers with one dual element fuse. Have control transformers separately fused on the primary side with two dual element fuses.
11. Unless otherwise called for on the one-line diagram, the minimum rating of the control power transformer, for the various sizes of starters, shall be as follows:

NEMA Size 1	75 VA
NEMA Size 2	150 VA
NEMA Size 3	250 VA
NEMA Size 4	500 VA

12. Connect the control power transformer so that it is de-energized when the circuit breaker is opened.

G. Reduced Voltage Starters

1. If reduced voltage starters are specified, provide the closed transition auto-transformer type.
2. Construct each reduced voltage auto-transformer starter unit with a molded-case circuit breaker in combination with a closed transition type auto-transformer starter with 50 percent, 65 percent, and 80 percent taps. Set the starter on the 65 percent tap. The starter shall have three phase overload relays and shall be ambient temperature compensated with manual reset. Include a thermal switch wired to protect the auto-transformer from overheating. Control timing of the starting period by an adjustable accelerating relay.
3. Provide heavy duty, NEMA type, autotransformers sized for a minimum of 125 percent of the motor load.

H. Terminal Blocks

1. Provide terminal blocks conforming to NEMA/ANSI ICS 4 type rated 600 volts, with screw type terminals to accommodate non-insulated ring tongue wire lugs for No. 18 through No. 10 size wire for field connection.
2. Use a sufficient number of terminal blocks so circuits for 480-volt and 120-volt service can be wired to a separate group of terminal blocks, making power and control circuit readily identified for safety during maintenance.
3. Wire auxiliary contacts to terminal blocks.

I. Units

1. Equip each unit compartment with barriers to isolate it from adjacent devices in the control center and prevent communication of faults from one compartment to another.
2. Provide draw-out type units. Provide means in the vertical section for supporting and aligning units during their removal or replacement.
3. Install an individual front door on each unit compartment. Make each door interlocking with the circuit disconnect so that the door may not be opened while the circuit disconnect is in a closed position. Provide a means for overriding this interlock.
4. Use padlocking arrangements that permit locking circuit disconnect in the open position with a minimum of three padlocks when the door is closed.
5. Arrange components so that removal of a starter or breaker unit does not require removal of its door, or the removal of an adjacent unit.
6. Place unit wiring diagrams in the print pocket on the inside of each unit door.
7. Furnish units designated as future or spare complete with guide rails, separator bars, doors, and operating hardware required to permit completion of the unit by the addition of a combination starter or feeder breaker unit.
8. For any unused space that is not suitable for the addition of a plug-in unit, fabricate and install a plain bolted sheet metal cover.
9. Identify electrical components, such as relays, breakers, terminal strips, and starters, with laminated nameplates as required in Section 16195.

10. Each motor starter door shall have a laminated nameplate duplicating the motor's nameplate rating information. At a minimum the motor nameplate information should include: HP, Phase, Hertz, Enclosure type, frame, code, RPM, volts, Amps, insulation class, max amb., duty cont., service factor, bearings, serial or ID number, P/N or Model number, and manufacturer.

J. Buses and Connections

1. Extend the main horizontal copper bus across the assembly to form a complete continuous bus. Support it in at least two places in each vertical section using glass-reinforced, polyester-type insulators which are impervious to moisture and adverse atmospheric conditions.
2. Fabricate buses from tin plated copper bars. Use buses designed to operate at individual rate full load current without exceeding a 50 degrees C temperature rise at 40 degrees C ambient temperature as defined in ANSI/UL 845. The continuous current rating of the main and branch buses shall be as stated on the one-line diagram.
3. Bolt connections to main and branch buses. Make joints and contact surfaces free of burrs and irregularities.
4. Provide tin-plated, compression-type cable connectors (NEMA 2-hole) for each bus bar in the main feed cubicle. Select connectors of adequate size and quantity for the feeder cables.
5. Make provision for extension in both directions for future sections.
6. Install both main and branch buses so they are phased in the order A-B-C from front-to-rear, top-to-bottom, and left-to-right as viewed from the front of the MCC.
7. Have a copper ground bus extend the full length of the MCC near the bottom, with provision for extension into future sections. It shall be amp rated at a minimum of 25 percent of horizontal power bus. Provide compression lugs on each end of the ground bus for connection of the grounding copper conductor. Permanently ground the non-current carrying metal parts of equipment within each MCC through the ground bus in accordance with ANSI/UL 467. Terminate ground cables to the ground bus by means of the connectors.

K. Wireways

1. Provide each section with horizontal wiring space at both the top and bottom. Make wiring spaces line up with adjacent sections to form a continuous wireway for the entire length of the MCC.
2. In addition, provide each section with a wireway space at least 4 inches wide between the units and side unit wiring. Secure the wireway with a tight fitting hinged access door of formed sheet metal.

Furnish wire straps in the vertical wireway to group individual conductors. Tie wires securely in place for a neat, orderly installation.

3. Completely enclose both horizontal and vertical wireways and isolate them from exposure to any live parts.
4. Use control wiring that is a minimum No. 14-AWG copper, 600 volts, Type TA, TBS or SIS as defined in ANSI C37.30.6.
5. For current transformer wiring, use No. 10 AWG copper which is otherwise, the same as control wiring.
6. Power and control cables may enter the MCC only at bottom. Provide suitable opening in bottom of MCC for cable entry. Collect power and control cables neatly in separate bundles.
7. Make wires continuous between terminals and other connections, without splices.
8. Identify wiring at both ends with same number, machine printed on heat shrink type sleeves as specified in Section 16195 - Electrical Identification.

L. Control Devices

1. Provide pushbuttons, selector switches and indicating lights which are of the oil tight, heavy duty type with industrial application quality.
2. Provide indicating lights which are push-to-test LED type with transformer and 100,000 hour lamp life.

M. Space Heaters: Install thermostat controlled electric space heaters to prevent condensation of moisture in the control centers. The rated voltage of these heaters shall be double the voltage applied. Make thermostats adjustable, and set to cut out when the temperature rises to an ambient of 30 degrees C (240 volt rated space heaters operated on 120 volt which power is derived from a local panelboard).

N. Nameplates

1. Use engraved phenolic with black lettering and white background for nameplates on individual units as well as the main nameplate for the assembly.
2. Make MCC compartment nameplates 1" x 3" with approximately 1/4 inch high lettering. Make MCC main nameplates 8" x 2" with 1 inch high lettering. Secure nameplates with self tapping stainless steel metal screws.
3. Provide a blank nameplate for spare compartments.
4. Word nameplate captions as indicated on the one-line diagram.
5. Label all components in the MCC with phenolic nameplates as required in Section 16195.

O. Finish

1. Thoroughly clean the inside and outside of the MCC of foreign matter, excessive oxide, scale, weld spatter, and flux. Repair fabricating scars and rough edges by welding and grinding before painting, followed by heat treatment, if required by the governing code or standard.
2. Give a finish coat of manufacturer's standard enamel for compartment doors, cover plates, and structural parts of the MCC. Do not apply paint or filler until repairs, tests, and final shop inspection are completed.

PART 3 EXECUTION

3.01 PREPARATION

A. Verify dimension of the housekeeping pad and the embedded leveling channels and conduit stub-ups.

3.02 INSTALLATION

A. Install the motor control center in accordance with the manufacturer's published instructions.

B. Torque bus bar bolts to manufacturer's recommendations and tighten nuts and bolts on the steel structure to ensure structural integrity.

C. Adjust the magnetic setting on motor circuit protectors in accordance with motor inrush currents (nameplate data).

D. Select and install motor starter overload relay heater coils based on motor nameplate data.

E. Touch up scratches and verify data on nameplates.

F. Install warning labels on Motor Control Centers as required in Section 16195, 2.02, F.

END OF SECTION

SECTION 16484

ELECTRONIC SOFT-START CONTROLLERS

PART 1 G E N E R A L

1.00 CONDITIONS

A. This copyright protected © specification is issued confidentially for this specific project only. Reproduction of this document for any other purpose is prohibited.

B. Refer to Section 16012 - "Electrical Work" for additional requirements. Failure to do so will be at expense of Contractor and at no additional cost to Owner.

C. Contractor shall contact local Factory Representative to verify all equipment purchased conforms to the requirements of this project. Failure to do so may result in equipment removal and replacement at Contractor's expense. See Section 16012 – "Electrical Work", Paragraph 1.04 – "Submittals" for submittal requirements.

D. Listing of acceptable Equipment Manufacturers does not limit or remove the intent of these specification requirements.

1.01 SCOPE

A. This specification describes the electrical, mechanical, and reliability requirements for three phase, electronic soft-start starters (controllers) with full voltage non-reversing (FVNR) bypass contactor as specified herein and as shown on the contract drawings.

1.02 RELATED SECTIONS

A. Division 16 – "Electrical" that apply to the requirements of this project.

1.03 REFERENCES

A. The electronic soft-start controllers and all components shall be designed, manufactured, and tested in accordance with the latest applicable standards of IEC, UL, and NEMA.

1.04 SUBMITTALS FOR REVIEW/APPROVAL

A. The following information shall be submitted to the Engineer.

1. Dimensioned outline drawing.

2. Schematic diagram
3. Component list.
4. Power and control connection diagram(s)

B. Submit six (6) copies of the above information.

C. With each submittal, include a copy of the applicable specification(s) page(s) for the item submitted and mark "Complies" or "Non-Compliance" or "Exception" adjacent to the applicable paragraph. Identify applicable drawing sheet number and specification section on front of each submittal cover.

1.05 SUBMITTALS

A. Submit all products covered under this section for Engineer's approval.

1. Descriptive bulletins
2. Product sheets

B. See Section 16012 – "Electrical Work" for additional requirements.

1.06 SUBMITTALS-FOR CLOSEOUT

A. The following information shall be submitted for record purposes prior to final payment.

1. Final as-built drawings and information for items listed section in 1.04.
2. Installation information

B. See Section 16012 – "Electrical Work" for additional requirements.

1.07 QUALIFICATIONS

A. The manufacturer of the assembly shall be the manufacturer of the major components within the assembly.

B. The manufacturer of this equipment shall have produced similar electrical equipment for a minimum period of ten (10) years. When requested by the Engineer, an acceptable list of installations with similar equipment shall be provided demonstrating compliance with this requirement.

C. Electronic soft-start controllers shall be equivalent to features of Cutler-Hammer type for function and quality. Products that comply with the specifications and manufactured by others are acceptable where pre-approved in writing.

1.08 DELIVERY, STORAGE, AND HANDLING

A. Equipment shall be handled and stored in accordance with manufacturer's instructions. One (1) copy of these instructions shall be included with the equipment at time of shipment.

1.09 OPERATION AND MAINTENANCE MANUALS

A. Six (6) copies of the equipment operation and maintenance manuals shall be provided.

B. Operation and maintenance manuals shall include the following information:

1. Step-by-step operation and maintenance instructions
2. Recommended renewal parts list.
3. Drawings and information required by Paragraph 1.06.
4. Comply with O&M requirements of Section 16012 – "Electrical Work."

PART 2 P R O D U C T S

2.01 MANUFACTURERS

A. Eaton/Cutler-Hammer

B. Square D

C. Siemens

D. Pre-approved equal, in writing

2.02 SOLID-STATE REDUCED VOLTAGE MOTOR CONTROLLER REQUIREMENTS

A. Electronic Soft-Start Controller with FVNR bypass.

1. The solid-state reduced voltage starter shall be UL and NEMA listed. The solid state reduced voltage controller shall be an integrated unit with power SCR's, heat sink, logic board, paralleling bypass contactor, and electronic overload relay enclosed in a single molded housing.
2. A full voltage bypass and isolation contactor is to be provided in addition to the standard Run contactor. Bypass contactor is to be NEMA rated and UL listed to start motor across the line.
3. The SCR based power section shall consist of six (6) back-to-back SCR's and shall be rated for a minimum peak inverse voltage rating of 1600 volts PIV.

The starter shall be three-phase, 60 Hz, and rated for the hp, current, and voltage as shown on the drawings.

4. Units shall include an integrated fan controlled by thermal sensors on the heat sink. Fan shall automatically operate during the start ramp and if internal temperature on the heat sink exceeds 60 degree C.
5. Units using triacs or SCR/diode combinations shall not be acceptable.
6. Resistor/capacitor snubber networks shall be used to prevent false firing of SCR's due to dv/dt effects.
7. The logic board shall be identical for all ampere ratings and voltage classes and shall be conformally coated to protect environmental concerns.
8. The paralleling run bypass contactor shall energize when the motor reaches 90% of full speed and close/open under 1 times motor current.
9. The paralleling run bypass contactor shall utilize an intelligent coil controller to limit contact bounce and optimize coil voltage during varying system conditions.
10. Starter shall be provided with electronic overload protection as standard and shall be based on an inverse time-current algorithm. Overload protection shall be capable of being disabled during ramp start for long acceleration loads via a DIPswitch setting on the device keypad.
11. Overload protection shall be adjusted via the device keypad and shall have a motor full load amp adjustment from 30 to 100% (3.2:1) of the max continuous ampere rating of the starter.
12. Starter shall have selectable overload class setting of 5, 10, 20 or 30 via a DIPswitch setting on the device keypad.
13. Starter shall be capable of either an electronic or mechanical reset after a fault.
14. Units using bi-metal overload relays are not acceptable.
15. Overtemperature protection (on heat sink) shall be standard.
16. Starters shall provide protection against improper line side phase rotations as standard. Starter will shut down if a line side phase rotation other than A-B-C exists. This feature can be disabled via a DIPswitch on the device keypad.
17. Starters shall provide protection against a phase loss as standard. Starter will shut down if a 50% current differential between any two phases is encountered. This feature can be disabled via a DIPswitch on the device keypad.
18. Start shall provide protection against a motor stall condition during the start ramp as standard. This feature can be disabled via a DIPswitch on the device keypad.
19. Starter shall provide protection against a motor jam condition during run as standard. This feature can be disabled via a DIPswitch on the device keypad.

20. Starter shall be provided with a form C normally open (NO), normally closed (NC) contact that shall change state when a fault conditions exists. Contacts shall be rated 240V AC and 24V DC max, 3 amps as standard. In addition, an LED display on the device keypad shall indicate type of fault (Overtemp, Phase Loss, Jam, Stall, Phase Reversal, and Overload).
21. The following control function adjustments on the device keypad are required:

    a. Selectable Torque Ramp Start or Current Limit Start
    b. Adjustable Kick Start Time, 0-2 seconds
    c. Adjustable Kick Start Torque, 0-85% (of LRT)
    d. Adjustable Ramp Start Time; 0.5-180 second
    e. Adjustable Initial Starting Ramp Torque; 0-85% (of LRT)
    f. Adjustable Smooth Stop Ramp Time; 0-60 seconds.

22. Enclosed units shall include a thermal magnetic circuit breaker or HMCP for short circuit protection and quick disconnect means.
23. Starters and breakers/HMCP's are to rated per UL508D for a withstand rating of 65 kAIC rms unless shown greater on one-line diagram.
24. Units enclosed in motor control centers shall be of the same manufacturer as that of the circuit breaker and motor control center for coordination and design issues.
25. The Manufacturer of the solid-state starter shall employ a field based factory service organization for the purpose of startup and repair of units. (Third party service contractors are not acceptable.) Manufacturer's local distributor shall maintain a minimum stock of one of each model unit installed under this contract.
26. Maximum continuous operation shall be at 100% of continuous amp rating.
27. Control power shall be 24V DC as standard for safety and reliability.
28. Separate control terminals shall be provided for 24V DC power, logic level signals for permissive, start, jog forward, ramp start overload override and electric reset.
29. Control terminals shall be pull-apart for easy access and wiring.
30. Optional external interface circuitry shall include 120-volt relay logic interface capability.
31. A removable Customer Interface Module (CIM) shall be provided that allows for full adjustment of control and protection functions thru the use of potentiometers and DIP switches.
32. Power terminations shall consist of pressure type terminals.
33. Enclosure

    a. Where separate enclosures are shown on plans, enclosures shall not be less than 16-gauge steel.

Type 12 enclosures shall be of welded construction with gasketed heat sink and doors. See plans for alternate enclosure requirements.

b. The following shall be included:

1) The operating handle of the disconnect, when supplied, shall always remain connected to the breaker or switch. The operating handle shall not be mounted on the door of the enclosure, but on the controller for safe "stand-aside" operation. The position of the operating handle will indicate ON or OFF position of switch or circuit breaker and include provision for padlocking in the OFF position. Through door mechanisms that have alignment rods are not permitted.
2) Interlock provisions shall prevent unauthorized opening or closing of the starter door with the disconnect in the ON position.
3) The structure, when floor-mounted, shall be provided with adequate lifting means and shall be capable of being rolled or lifted into installation position and bolted to the floor.

34. Controller characteristics shall be coordinated with motor manufacturer's requirements and/or restrictions for soft-start controller starting and operation.
35. All enclosures for motor starters 100 horsepower and greater shall have forced air cooling. All enclosures for any size controller shall have forced fan air filters within enclosure.
36. Controller shall have ethernet, RS232, RS485 and Ethernet com ports for communicating, monitoring, and control interface with pump controller PLC. Provide all software, HMI templates, addresses, and programming in coordination with SCADA Programmer for a complete working control interface. Provide all required factory interface cables. Allow for Ethernet and/or ModBus or ModBus Plus communications protocol with Ethernet via fiber optic link to Master Control Station or to solid-state controller OIU. Provide all software and addresses.
37. Where Ethernet Fiber Optic (F.O.) communications link is indicated on plans, provide F.O. converter as required to interface controller or SCADA.
38. Manufacturer to provide all controller addresses, HMI and OIU templates and other data pertinent to SCADA programming by Engineer. No exceptions.
39. Where power factor correction capacitors are used or shown on plans, a capacitor contactor with a time delay relay, HOA switch and run light shall be used to connect capacitor to main bus. <u>DO NOT</u> connect capacitor across motor or on load side of starter.

Contactor shall shunt starter on MCC set time delay such that any bypass contactors have transferred to Run before closing capacitor Contractor. Provide documentation of settings for Engineer review.

40. Vendors for equipment with solid-state controller shall include provisions for both hardwired and data path status, command and alarm functions included under contract without additional cost to Owner, Programmer, or Engineer.
41. Contactor shall include minimum of four single pole, double throw spare auxiliary contacts rated at 10 amperes continuous, for each starter furnished.
42. All equipment, instruments and devices provided for this project shall have means of protection from power line conditions such as surge, phase fail, or other line conditions that may damage equipment, instruments or devices furnished. It is vendors and manufacturers' responsibility to provide protective devices as required for maintaining warranty of furnished items and to assure no damage occurs from power line conditions.
43. Factory Technician shall confirm which manufacturing modes that starter has been adjusted and programmed to operate in before operating motor. Program start and stop ramp time as agreed by Engineer. All well motors are to have extended ramp down when stopping. Coordinate ramp time with Engineer.
44. Controller shall have filters as required to prevent introduction of harmonics on motor power circuit when solid state SCRs are operating motor. Provide factory test dates that describes frequency and amplitude of any harmonics for Engineers review.

PART 3 EXECUTION

3.01 FACTORY TESTING

A. The following standard factory tests shall be performed on the equipment provided under this section. All tests shall be in accordance with the latest version of UL and NEMA standards.

1. All printed circuit boards shall be functionally tested via fault finder bench equipment prior to unit installation.
2. All final assemblies shall be load tested.

3.02 INSTALLATION

A. Coordinate installation with other trades and install controller according to manufacturer's recommendations.

B. Where Contractor fails to protect electronic soft start controller before and after installation on site and where excessive dust is observed inside the enclosure, the Contractor shall have a factory warranty service technician clean, inspect and test unit, after which the factory shall issue a written and signed statement that full factory is in effect. There are no exceptions to this requirement except to replace entire unit at Engineer's request.

3.03 FIELD QUALITY CONTROL

A. Provide the services of a qualified factory-trained manufacturer's representative to assist the Contractor in installation and start-up of the equipment specified under this section. The Manufacturer's Representative shall provide technical direction and assistance to the Contractor in general assembly of the equipment, connections and adjustments, and testing of the assembly and components contained herein. A Factory Technician shall provide all programming and set up adjustments for starter and shall provide a written report for Engineer's review. Report shall include value setting of each and every setting or adjustment for both hardware or software programmers. Engineer must approve operations of motor based on settings or certified by Factory Technician as correct for this project applications.

B. The following minimum work shall be performed by the Contractor and Manufacturer's Representative under the technical direction of the manufacturer's service representative. Allow for a minimum of twelve (12) days for factory technician including all expenses for the following services:

1. Inspection and final adjustments for startup, and acceptance testing.
2. Operational and functional test of controllers.
3. Participation in commissioning services. Technical Representative shall be present for duration of commissioning tests related to vendor equipment.

C. The Contractor shall provide three (3) copies of the manufacturer's field start-up report before final payment is made. Report shall include all hardware and software adjusted values and dates adjusted.

D. Vendors for equipment with solid-state controller shall include provisions for both hardwired and data path status, command and alarm functions included under contract without additional cost to Owner, Programmer, or Engineer.

3.04 FIELD ADJUSTMENTS

A. Make all adjustments according to manufacturer's recommendations. All adjustments and set-up shall be factory trained Technician only. No exceptions.

B. Coordinate adjustments of soft-start controller with other equipment adjustments, such as standby power generator.

3.05 FIELD TESTING

A. Factory Technician shall test controller operation in presence of Engineer and/or Owners representative. Testing shall include oscilloscope recording of each phase let to observe any unwanted harmonic wave forms introduced on motor circuit during ramp up or ramp down of motor by the solid state SCR devices.

B. Provide field support for testing as required and at times needed with Programmer and Owner's Representative.

C. Factory Technician shall be present for final acceptance testing and shall demonstrate system operation to Engineer and Owner's Representative.

3.06 MANUFACTURER'S CERTIFICATION

A. A qualified Factory-Technician shall certify in writing that the equipment has been installed, adjusted, and tested in accordance with the manufacturer's recommendations.

B. The Contractor shall provide three (3) copies of the certification and warranty before final payment is made.

3.07 TRAINING

A. The Contractor shall provide a training session for Owner's Representatives at a jobsite location determined by the Owner.

B. The training shall be conducted by a Manufacturer's qualified representative.

C. The training program shall consist of the following:

1. Instructions on the proper maintenance and operation of the equipment

D. Training, travel and all other expenses shall be at no additional cost to Owner.

E. See Section 16012 – "Electrical Work" for additional requirements.

3.08 WARRANTY

A. Contractor shall provide full 3-year service warranty on the overall installation, and shall include all labor and materials required to repair or replace equipment and/or components that are defective or malfunctioning. Included under this warranty shall be all equipment, devices, hardware, and software.

This warranty shall begin at date of written final acceptance of electrical systems and shall include both labor and materials at no additional cost to owner. There are no exceptions to this requirement. Contractors warranty shall guarantee 24-hour service response time and shall provide whatever labor, work, or materials needed to maintain plant operation when replacement parts are on order. In no case shall plant electrical systems be out of service for over 24 hours from time Owner calls for warranty service. This shall be at no additional cost to Owner. All materials and equipment installed shall have full warranty from manufacturer that guarantees equipment is rated for the harsh Industrial Electrical/Mechanical environment in which it is installed. Where manufacturer's products fail prematurely, manufacturer shall be fully responsible for new replacement and shall not have option of declaring that failures were caused by environment and its affect on the product. Contractor is fully responsible for assuring that product manufacturers are aware of this condition and that manufacturer's warranty statement is included in shop drawings. Failure to do so will be at full expense of Contractor and at no additional cost to Owner. Where warranty requirements are shown in other sections, the more stringent requirement shall have precedence.

END OF SECTION

SECTION 16662

MOTOR MANAGEMENT RELAY

PART 1 G E N E R A L

1.00 CONDITIONS

A. This copyright protected © specification is issued confidentially for this specific project only. Reproduction of this document for any other purpose is prohibited.

B. Contractor shall comply with Paragraph 3.07, A, 3 of this specification, for programming allowance requirements before bidding.

C. Refer to Section 16012 - "Electrical Work" for additional requirements. Failure to do so will be at expense of Contractor and at no additional cost to Owner.

D. Contractor shall contact local Factory Representative to verify all equipment purchased conforms to the requirements of this project. Failure to do so may result in equipment removal and replacement at Contractors expense. See Section 16012 – "Electrical Work," Paragraph 1.04 – "Submittals" for submittal requirements.

1.01 SUMMARY

A. Section Includes:

1. Motor Management Relay (MMR) and related devices commonly used with them.
2. Programming Requirements.

1.02 REFERENCES

A. National Fire Protection Association (NFPA): NFPA 70-90 - National Electrical Code (NEC).

1.03 DEFINITIONS

A. Motor Management Relay (MMR): Primary protective function shall be the thermal model consisting of four key elements:

1. Overload curves
2. Negative sequence unbalance/single phase bias
3. RTD Biasing (hot/cold motor compensation)
4. Motor cooling time constants.

1.04 SUBMITTALS

A. Shop Drawings:

1. Motor Management Relay showing dimensions and features including installation details.
2. Current and potential transformers showing dimensions and features including installation details.

B. Product Data:

1. Product data for motor management relay, C.T's, P.T.'s and accessories specified in this Section, including descriptive data and C.T. ratios.
2. Include parts list.

C. Test Results: Certified reports of field tests and observations.

D. With each submittal, include a copy of the applicable specification(s) page(s) for the item submitted and mark "Complies" or "Non-Compliance" or "Exception" adjacent to the applicable paragraph. Identify applicable drawing sheet number and specification section on front of each submittal cover.

E. Operation and Maintenance (O&M) Manuals: Provide O&M on CD. See Section 16012 – "Electrical Work" for additional requirements. Contract Engineer for format and contents.

1.05 QUALITY ASSURANCE

A. Items provided under this section shall be listed and labeled by UL or other Nationally Recognized Testing Laboratory (NRTL).

1. Term "NRTL" shall be as defined in OSHA Regulation 1910.7.
2. Terms "listed" and "labeled" shall be as defined in National Electrical Code, Article 100.

B. Regulatory Requirements:

1. Components and Installation:

a. NFPA 70 "National Electrical Code (NEC)."
b. Local codes and ordinances.

C. Single-Source Responsibility: Obtain C.T.'s and P.T.'s from single manufacturer of MMR.

D. See requirements of this specification section for password requirements.

1.06 MAINTENANCE

A. Extra Materials:

1. Maintenance Stock, Spare Parts: As recommended by Manufacturer.

PART 2 P R O D U C T S

2.01 MOTOR MANAGEMENT RELAY (MMR)

A. General: Provide MMR in indicated type, as integral components of panelboards, switchboards, and motor control centers; and also as individually enclosed and mounted single units. Provide externally mounted 48 hour UPS for MMR 120 volt source.

B. Enclosures: Manufacturers draw-out construction to facilitate testing and maintenance. Unit to be recessed in MCC starter section flush with door and shall not protrude out more than 2 inches from door surface. Coordinate with MCC Manufacturer for adequate space behind door.

C. Features: The motor management relay shall include complete power metering. An events recorder shall store the last 40 events. Sixteen cycles of waveform data shall be stored each time a trip occurs. A simulation feature shall be available for testing the relay. The user interfaces shall include:

1. A 40 character illuminated vacuum fluorescent display and associated keypad to provide access to actual values and set points.
2. A front RS232 serial port for set point programming.
3. An RS-485 serial port that shall use an open protocol with baud rates selectable up to 19,200 bps. Provide Ethernet conversion unit where indicated on plans.
4. An independent auxiliary RS485 port shall be available for added security or for use by maintenance personnel.
5. Ethernet port shall be provided on back of unit. Route cable to ethernet switch.
6. Interface software shall be provided in a Windows format.

D. The stator protective thermal model shall combine inputs from positive and negative sequence currents and RTD winding feedback. The protection shall also include:

1. Stall
2. Jam
3. 12 RTD inputs

4. Ground Overcurrent
5. Short Circuit
6. Differential protection using CT inputs; (6) from both sides of the machine winding.
7. Voltage transformer inputs, which shall be used to provide over-voltage, under-voltage, voltage phase reversal, over-frequency and under-frequency functions.

E. MMR shall store up to 40 time and date stamped events, including the pre-tip data. For each trip, the MMR shall store a trace of 8 cycles pre-trip and 8 cycles post-trip for all measured AC quantities.

F. Manufacturer: G.E. Multilin

G. Model: SR469

2.02 CURRENT TRANSFORMER (CT)

A. Phase current CT's shall be provided for all three phase legs. In addition, a ground CT shall be provided. CT size and rating to be determined by MMR manufacturer and shall be furnished as part of the MMR equipment package. Include mounting brackets and all appurtenances. CT's shall be sized to detect peak inrush current of motor. Provide load resistor across terminals.

2.03 POTENTIAL TRANSFORMER (PT)

A. A 3 phase PT shall be provided for voltage measurements of all three phase legs. PT size and rating shall be determined by MMR manufacturer and shall be provided as part of the MMR equipment package. Include mounting bracket and all appurtenances. PT shall be rated for 5 kV minimum.

2.04 SOFTWARE

A. Manufacturers programming, operation, maintenance, and data analysis software shall be included in MMR equipment package. Complete instructions and any special equipment required for installation, setup, programming, operation, maintenance and data analysis shall be provided as part of the MMR equipment package. Special cables, plugs and adaptors for loading and downloading data to a computer shall be included.

B. All programming shall be done by City SCADA Personnel.

C. All programming will be coordinated with Motor Manufacturers and shall conform to their standards.

D. Manufacturer to provide all controller addresses, HMI and OIU templates and other data pertinent to SCADA programming by City SCADA Personnel. No exceptions.

E. Passwords shall be used until the end of the construction warranty period, at which time Owner may elect to change.

2.05 UNINTERRUPTIBLE POWER SUPPLY

A. Contractor shall provide an across the line type UPS with sufficient battery capacity to maintain all memory data in the SR 469 for a period of 48 hours during power interruption.

B. UPS shall be equal in quality and capacity to APC SMART-UPS, P/N SURTA1500RMXL2U with five (5) each P/N SURTA48RMXLBP battery pack. Install UPS within an MCC enclosure section with other UPS unit.

2.06 RTD'S

A. Provided by Motor Manufacturer or as specified by Motor Manufacturer for specific motor furnished. These requirements are to be coordinated with Motor Supplier prior to bidding. Failure to do so is at Contractor's expense and at no additional cost to Owner. This also applies to where motor is delivered without RTD's.

B. Provide 100 ohm platinum RTD's.

PART 3 E X E C U T I O N

3.01 INSTALLATION

A. MMR

1. Install MMR as shown on plans or as described in specifications.
2. Installation shall be done according to manufacturers recommendations and shall be done in a neat and professional manner. See Paragraph 2.1 – "Motor Management Relay (MMR)," Item B for additional information.
3. Locate as indicated and install in accordance with manufacturer's written installation instructions.
4. Provide devices and connections to MMR as shown on plans.

B. Current and Potential Transformers:

1. CT's and PT's shall be rated for electrical system voltage and current parameters and shall be installed according to the manufacturer's recommendations with hardware intended for mounting P.T.'s and C.T.'s.
2. Warning: When energized, open CT circuit can have lethal voltages. Use caution when servicing live CT circuits.

C. Bypass Switch: Where Multilin is installed in motor control circuit, provide a key operated selector switch and bracket located on backplate behind door to allow bypass of alarm contacts so as to allow well pump to be operated under emergency conditions when Multilin unit has failed or is removed for service. Provide nameplate to indicate key position. Provide additional controls for use with SCADA system. Provide four (4) sets of keys. See plans for additional information.

3.02 IDENTIFICATION

A. Identify components and wiring in accordance with Section 16195 – "Electrical Identification."

3.03 CONTROL WIRING INSTALLATION

A. Wiring to C.T.'s and P.T.'s shall be installed according to related NEMA and NEC standards and codes. All wiring to be rated for application and shall be neatly bundled and secured with clamps. No stick on clamps are to be used. All wires are to be terminated with proper lugs. C.T. lugs shall be ring type only.

3.04 CONNECTIONS

A. Check connectors, terminals, bus joints, and mountings for tightness.

B. Tighten field-connected connectors and terminals, including screws and bolts, in accordance with equipment manufacturer's published torque tightening values. Where manufacturer's torquing requirements are not indicated, tighten connectors and terminals to comply with tightening torques specified in UL 486A and UL 486B.

3.05 GROUNDING

A. Provide equipment grounding connections for individually mounted Overcurrent Protective Devices (OCPD) units as indicated and as required by NEC. Tighten connectors to comply with tightening torques specified in UL Standard 486A to assure permanent and effective grounding.

3.06 COORDINATION STUDY

A. Where coordination study recommends changes in types, classes, features or ratings of equipment or devices indicated, make written request for instructions. Obtain instructions from Engineer before ordering equipment or devices recommended to be changed.

3.07 FIELD QUALITY CONTROL

A. Manufacturer's Field Services:

1. Supplier's or manufacturer's technician for equipment specified herein shall be present at job site or classroom designated by Owner for minimum of 1 workday, travel time excluded, for assistance during plant construction, plant startup, equipment adjustment, and training of Owner's personnel for equipment service and maintenance. Include minimum of:

    a. One-half (1/2) person-day for technical services, set-up and testing in presence of Engineer.

2. Supplier or manufacturer shall direct services to specific system and equipment operation, maintenance, and troubleshooting.
3. Programming of the motor management relay alarm and trip set points and all testing shall be performed by the "Systems Integration Engineer." No Exceptions. Contractor shall include an "Allowance" for motor management relay set point programming.
   Where programming "Allowance" is not shown on bid sheet, contact Shrader Engineering, (713) 467-9961 for details before bidding. Provide fax number for receipt of "Allowance" confirmation. Failure to provide an "Allowance" will be at Contractors risk and cost. Contractor shall coordinate installation, programming, and setup testing with motor manufacturer and "Systems Integration Engineer."
4. All of the motor data available from the manufacturer, including overload curves and thermal characteristics, and all motor circuit information must be furnished by the Contractor to the Engineer a minimum of two weeks prior to programming of Multilin unit or six (6) weeks prior to date MCC or starter is to be energized, whichever is more stringent requirement.
5. Operational training for Multilin shall be provided by the "Systems Integration Engineer" defined in Paragraph 3 above.
6. Manufacturer or Representative shall provide operating instructions CD. Contact Engineer for format and contents.

B. Testing:

1. Reports: Prepare certified written reports on tests and observations. Report all defective materials, workmanship, and unsatisfactory test results. Include complete records of repairs and adjustments made.
2. Labeling: Upon satisfactory completion of tests and related effort, apply label to tested components indicating test results, date, and responsible person.
3. Schedule visual and mechanical inspections and electrical tests with at least 1 week's advance notification.
4. Pre-testing: Upon completing installation of system, perform following preparations for tests:

    a. Make insulation resistance tests of OCPD buses, components, and connecting supply, feeder, and control circuits.
    b. Make continuity tests of circuits.
    c. Include full updating on final system configuration and parameters where they supplement or differ from those indicated in original Contract Documents.
    d. Comply with manufacturer's instructions for installation and testing of OCPDs.

5. Visual and mechanical inspection: Include following inspections and related work.

    a. Overcurrent Protective Device Ratings and Settings: Verify indicated ratings and settings to be appropriate for final system arrangement and parameters. Where discrepancies are found, test organization shall recommend final protective device ratings and settings. Use accepted revised ratings or settings to make final system adjustments.

6. Retest: Correct deficiencies identified by tests and observations and retest. Verify by system tests that specified requirements are met.

3.08 CLEANING

A. Upon completion of installation, inspect MMR. Remove paint splatters and other spots, dirt, and debris. Touch up scratches and mars of finish to match original finish.

3.09 REPLACEMENT

A. Where failure or damage occurs prior to final acceptance by Owner, a new unit shall be installed at no additional cost. Repaired units are not acceptable. No Exceptions.

3.10 SERVICE

A. Provide 24-hour service response during warranty period. Replacement unit for critical applications such as water well motors shall be provided within 48 hours.

3.11 WARRANTY

A. Contractor shall provide full 3-year service warranty on the overall installation, and shall include all labor and materials required to repair or replace equipment and/or components that are defective or malfunctioning. Included under this warranty shall be all equipment, devices, hardware, and software. This warranty shall begin on date of written "Final Acceptance" of the electrical systems and to be executed as required at no additional cost to the Owner. Contractor's warranty shall also guarantee 24-hour service response time and shall provide labor, work, or materials as necessary to maintain plant operation when replacement parts are on order. In no case shall plant electrical systems be out of service for more than 24 hours from time Owner calls for warranty service. This shall be provided at no additional cost to the Owner.

All equipment and materials installed shall have full warranty from Manufacturer that guarantees equipment is rated for harsh industrial electrical/mechanical environment in which it is installed. Where Manufacturer's products fail prematurely, Manufacturer shall be fully responsible for new replacement and shall not have the option of declaring that failures where caused by environmental conditions and its affect on the product. Contractor is fully responsible for assuring that Product Manufacturers are aware of this condition and that warranty statement is included in shop drawing submittals. Failure to do so will be at the Contractor's expense and at no additional cost to the Owner.

B. All critical warranted repairs shall be made within 24 hours of receipt of required parts from Manufacturer with reasonable delivery time of overnight shipping. Any repairs not completed within 5 working days from date of notice are subject to Owner making other arrangements for repair and back charging Contractor. This requirement is a condition of this contract.

C. Where equipment or instrument problems remain unresolved by Contractor beyond a reasonable time, a Factory Technician shall be provided on-site to take any corrective actions necessary to put equipment or instruments in operating order. Owner and Engineer reserve the right to determine a reasonable time for corrective action by Contractor.

END OF SECTION

SECTION 16936

PILOT AND MISCELLANEOUS CONTROL DEVICES

PART 1 G E N E R A L

1.00 CONDITIONS

A. This copyright protected © specification is issued confidentially for this specific project only. Reproduction of this document for any other purpose is prohibited.

B. Refer to Section 16012 - "Electrical Work" for additional requirements. Failure to do so will be at expense of Contractor and at no additional cost to Owner.

C. All equipment and devices shall be NEMA rated. IEC rated equipment and devices are not acceptable.

D. Contractor shall contact local Factory Representative to verify all equipment purchased conforms to the requirements of this project. Failure to do so may result in equipment removal and replacement at Contractor's expense. See Section 16012 – "Electrical Work," for submittal requirements.

1.01 SUMMARY

A. Section Includes:

1. Pilot and control devices for instrumentation and control (I&C) system.
2. Products listed are applicable where indicated on plans or required in other specifications.

PART 2 P R O D U C T S

2.01 PUSHBUTTON/SELECTOR SWITCH CONTROL UNITS AND PILOT LIGHTS

A. Manufacturers:

1. Square D Class 9001, Type K
2. Cutler-Hammer 10250T
3. Allen Bradley 800T
4. Or, pre-approved equal

B. Construction:

1. Heavy duty

2. Watertight
3. Oiltight
4. Base mounting
5. Flush panel mounting
6. Size to mount in 30.5 mm diameter opening without adapter. Smaller units are not acceptable.
7. Padlock attachments, where required, constructed of metal. Plastic material is not acceptable.
8. Legend plates, as required, for type of operation or as specified elsewhere.

C. Pushbuttons:

1. Flush head unless specified elsewhere.
2. Contact Blocks:

    a. Double break silver contacts
    b. AC Ratings: 7,200 VA make, 720 VA break
    c. Single pole, double throw or double pole, single throw
    d. Up to six (6) tandem blocks

3. Maintained contact unless specified elsewhere.
4. Non-illuminated.
5. Legend plates, as required, for type of operation or as specified elsewhere.

D. Selector Switches:

1. Maintained position unless specified elsewhere
2. Contact Blocks:

    a. Double break silver contacts
    b. AC Rating: 7,200 VA make, 720 VA break
    c. Single pole, double throw or double pole, single throw
    d. Up to six (6) tandem blocks

3. Operators:

    a. Number of positions as specified elsewhere
    b. Standard knob type unless specified elsewhere

E. Pilot Lights:

1. LED, high visibility type
2. Colored lenses as specified elsewhere

3. Interchangeable lenses
4. Push to test
5. Legend plates as specified elsewhere

F. Enclosures:

1. Mounted in control or instrument panel as specified elsewhere
2. Control Station:

a. Environment:

1) NEMA 12 in general areas
2) NEMA 4X 316 stainless steel in wet locations or outdoors.

b. Flush or surface mounted as specified elsewhere.

1) Provide flush mounted pull box.

G. Nameplates:

1. MCC: Section 16482 – "Motor Control Centers (600 Volts or Less)"
2. Control Stations:

a. Engraved laminated plastic
b. Letters 3/16 in. high
c. White letters on black background
d. Identify per equipment controlled

2.02 MOTOR STARTER CONTROL RELAYS

A. Manufacturers:

1. Square D
2. Cutler Hammer
3. Or pre-approved equal

B. Construction:

1. Industrial type
2. 300 V rated
3. AC operation
4. Pressure wire connectors

C. Operating Data:

1. Pickup Time: 11 ms maximum

2. Dropout Time: 6 ms maximum

D. Coil:

1. Molded construction
2. 120 VAC, 60 Hz
3. Continuous rated
4. Color coded to indicate status
5. Pilot duty
6. 60A make, 6A break, (120 V inductive)

E. Contacts:

1. Double break
2. Silver alloy
3. Convertible
4. Color coded to indicate status
5. Pilot duty
6. 60A make, 6A break, (120V inductive)

F. Track mounting capability.

G. Accessories:

1. Add-on pole attachment:
   a. 4 NO and 4 NC contacts
   b. Add-on to 0 to 4 pole relay
2. Latch attachment.
3. Pneumatic Timer Attachment:
   a. Single pole, double throw, double break timed contact.
   b. Adjustable 0.2 to 60 sec.
   c. Repeat accuracy of $\pm$ 15 percent.
   d. Convertible timing mode.
4. Transient Timing Mode: Suppress coil transients to 300 V or less.

H. All relays to be 4PDT type.

2.03 CONTROL RELAYS

A. Manufacturers:

1. Potter and Brumfield

2. Struthers Dunn
3. Or pre-approved equal

B. Operating Data:

1. Pickup Time: 13 ms maximum.
2. Dropout Time: 10 ms maximum.
3. Operating Temperature: -45°C to 70°C.

C. AC Coil:

1. 120 or 240 Vac.
2. Continuous rated
3. 3.5 VA inrush
4. 1.2 VA sealed
5. 50 to 60 Hz
6. Minimum Dropout Voltage: 10% of coil rated voltage.

D. DC Coil:

1. 24 or 120 Vdc.
2. Continuous rated
3. Minimum Coil Resistance

    a. 24 Vdc: 450 ohm
    b. 120 Vdc: 9,000 ohm

E. Contacts:

1. Silver cadium oxide for 1 amp or less resistive load
2. Gold flashed fine silver, gold diffused
3. 4 Form C
4. 120 VAC
5. 20 amp make, 1.5 amp break (inductive)

F. Rated at 10 million operations

G. Plug-in sockets

H. Enclosed and protected by polycarbonate cover

I. Provide relay retaining clips.

J. All relays to be 4PDT type.

2.04 TIME DELAY RELAY

A. ATC # 319D-016, with 2 SPDT switches rated 5 amps at 120 Volt, contacts and coil, plug in base and socket, 5 ranges, .02 seconds to 30 minutes.

B. AGASTAT #7022AC, Instantaneous open on energization, time delay close on de-energization. Time range 1.5 seconds to 15 seconds, 120 volt, 60 Hz

C. ATC Model #319D-134, with 2 S.P.D.T. switches rated 5 Amps at 120 Volt, contacts and coil, plug in base and socket, 3 ranges, .1 to 100 seconds.

D. Macromatic Industrial Controls, Model #TAA1U, with two (2) S.P.D.P. switches rated 3 amps at 250 volt contacts, 24-240VAC/DC coil, plug-in base, six (6) functions, sixteen (16) ranges, 0.5 seconds to 10 hours.

E. Or approved equal

2.05 ELAPSED TIME METER

A. Manufacturers:

1. Cramer #635G/HRS.
2. Digits: Five (5), non-resettable.
3. Power: 120 VAC, 60 Hz.

B. Manufacturers:

1. Cramer #635S surface mounted.
2. Digits: Five (5), non-resettable
3. Power: 120 VAC, 60 Hz

2.06 TIMERS

A. 24 Hour Clock Timer (Repeat Cycle):

1. Manufacturers:

   a. Tork Time Controls
   b. Intermatic
   c. Or pre-approved equal

2. Mounting: Surface
3. Display: 24-hr LCD
4. Contacts: One (1) SPDT rated 20A
5. Set Points: 288 per 24 hr.

6. Skip Feature: 1 to 7-day adjustable
7. Minimum On-Off Time: 5 min.
8. Time cycle programmable by keypad
9. Power: 120 VAC, 60 Hz

B. Interval/Duration Timer:

1. Manufacturers: ATC or equal.
2. Mounting: Plug-in with dust tight cover
3. Type: Integrated circuit
4. Range: As indicated on drawings
5. Contacts: Two (2) DPDT contacts rated 10 amp
6. Power: 120 VAC, 60 Hz.

2.07 PRESSURE SWITCHES - (NOT APPLICABLE)

2.08 EXTERIOR MOUNTED ALARM LIGHT

A. Manufacturers:

1. Edwards
2. Appleton Electric Company
3. Crouse Hinds
4. Or pre-approved equal

B. 120 VAC

C. Suitable for use in wet location, gasketed.

D. Cabinet mounted, provide mounting lugs. Body to include outlet box.

E. Aluminum mounting hood.

F. Red glass globe with guard.

G. ¾ inch conduit hubs

2.09 ROTATING BEACON - (NOT APPLICABLE)

2.10 PHASE FAIL RELAY

A. Diversified Electronics #SLD-440-ALE, 480 Volt, 3 Phase.

B. Diversified Electronics #SLD-220-ALE, 240 Volt, 3 Phase.

C. Macromatic Industrial Controls, #PMDU, 208-480 Volt, 3 Phase

2.11 FLOW SWITCH - (NOT APPLICABLE)

2.12 UNIVERSAL AC CURRENT SENSOR

A. Manufacturer:

1. Entrelec, SSAC, Inc. – P.O. Box 1000, Baldwin, NY, 13027
2. Or, approved equal.

B. TSC, ECS, ECSH, and ECSL Series: Provides relay contact closure when current reaches pre-set level.

C. Install per Manufacturer's instructions.

D. Sensor to be rated at 125% of current rating.

2.13 CURRENT TRANSDUCER

A. Manufacturers:

1. NK Technologies
2. Ohio Semitronics, Inc.
3. Or, approved equal

B. AT Series: Current transformer with signal conditioner. Split or solidcore as applicable. 420 model with 4–20 MA output. Self powered. 0 – 200 amp range. U.L. listed.

C. A.C. Current Transformer Model No. MCT5, 005E or 005E2 (as shown on plans) with Manufacturer's recommended CT rated per circuit maximum amps x 1.25.

D. AT/ATR Series: 0 – 200 amp range or, as required by motor current rating.

E. Transducer to be rated for 125% of voltage rating.

F. Size unit to detect peak inrush current of motor.

2.14 VOLTAGE TRANSDUCER

A. Manufacturer:

1. Ohio Semitronics, Inc.
2. Or, approved equal

B. A.C. Voltage Transducer Model VT, rated per circuit maximum voltage x 1.25. Select version that matches shown on plans.

C. Transducer to be rated for 125% of current rating.

2.15 DC INPUT, FIELD CONFIGURABLE ISOLATOR

A. Manufacturer:

1. Action Instruments, Model ACTIONI/Q Q406
2. Or, approved equal.

B. Construction:

1. Provides one or two fully isolated DC output signals in proportion to one or two DC inputs.
2. Field Configurable: 4-20 ma, 0-1 ma, 0-10V or 0-20 ma.
3. 120 V power source.

2.16 SIGNAL CONVERTER/ISOLATION AMPLIFIER

A. Manufacturers:

1. MCR-C Series manufactured by Phoenix Contact.
2. AKT Series manufactured by Wieland Manufacturing.

B. Voltage to current and current to voltage conversion.

C. Current to current isolation amplifier.

2.17 ETHERNET SWITCH – FIVE (5) PORT - (NOT APPLICABLE)

2.18 PANEL GAUGES

A. Provide front flange, flush, panel mounted 6-inch diameter and with lower back mount type.

B. Range:

1. Water Pressure: 0 to 150 psi.
2. Ground Storage Tank Level: 0 to 50 feet.
3. Other measured parameter range plus 25 percent.

C. Accuracy: 1 percent or better.

D. Manufacturers:

1. Marshal Town
2. Or approved equal.

2.19 DC/DC CONVERTER

A. Manufacturer and Model: AGM Electronics, Group 4000 or, as pre-approved in writing.

B. Supply Voltage: 8 – 90 VDC.

C. Load Drive: 0 – 350 ohms.

D. 2 or 4 wire, as required.

E. 4 - 20 ma or 8 – 10 vdc, as required for inputs and outputs.

F. Accuracy: Plus/minus 0.1 percent calibration.

G. Adjustable signal offset and span.

H. Outputs: Multiple, as indicated on plans or as required for circuit application.

I. See Manufacturer's data sheets for additional requirements.

2.20 MULTIPLE CHANNEL ISOLATED SWITCH

A. Manufacturer: Diversified Electronics.

B. Model: ISO and ISL Series.

C. Contacts: SPST-N.O. per channel.

D. Temperature Range: -4° F to 135° F.

E. LED indicators for each output.

2.21 AC CURRENT TRANSDUCER

A. Manufacturer: HCS.

B. Model: CR4170 Series.

C. Output: 4 – 20 mA or 0 – 5 VDC, as required.

D. Three (3) element AC current.

E. Calibration: True RMS sensing.

F. Temperature Range: 0 to 50 degrees Celsius.

2.22 IMPEDANCE MATCHING TRANSFORMER

A. Manufacturer: Hammond Manufacturing

B. Model: 802 and 803E

C. 50 ohm to 600 ohm

2.23 MODBUS Ethernet Serial Server

A. Manufacturer:

1. B & B Electronics.

B. Models:

1. MESA1A, MES1B.

C. Dimensions:

1. MES1A/MES1B – 1.25 x 4.5 x 4.75 in (3.2 x 11.3 x 12.2 cm).

D. Power Supply Requirements:

1. 10VDC to 30VDC @ 3.6W.

E. Power Consumption:

1. 12VDC @300 mA.

F. Operating Temperature:

1. -20 to 80 °C (-4 to 176 °F).

G. Humidity:

1. 10% to 90% R.H. non-condensing.

H. Ethernet:

1. Single RJ-45 female (with built-in LED indicators).
2. IEEE 802.3 10/100 Mbps auto-detecting, 10BaseT, 100BaseTX.
3. TCP, UDP, DHCP, SNMP, TELNET, ICMP, ARP, TFTP, Modbus ASCII, Modbus RTU, Modbus/TCP

I. Serial:

1. 12V TVS for MES1A.
2. MES1A – 9 pin D-type male (DB-9M).
3. 5 V TVS for MES1B.
4. MES1B removable screw terminal (5) block with screw down.

J. Interface Lines Supported:

1. MES1A – RS-232 TD, RD, GND.
2. MES1B – RS-422-485 TDA(-), TDB(+), RDA(-), RDB(+), GND.

K. Configuration Modes:

1. Telnet, XPort Device Installer with integrated Telnet.

L. Device Management:

1. SNMP – RFC 1213-1215-1316-131.

2.24 TAGGING

A. Provide Type 316 stainless steel tag on field-mounted units and permanently affix tag to unit.

B. Include Engineer's tag number where listed in Control Diagrams.

C. See Section 16195 – "Electrical Identification" for additional requirements.

PART 3 EXECUTION

3.01 INSTALLATION

A. Install in accordance with manufacturer's written instructions, applicable requirements of NEC, NECA "Standard of Installation," and recognized industry practices.

B. Control Relay:

1. Install panel control relays in I&C panel.
2. Install motor starter control relays in MCC and wherever more rugged type relay required.

END OF SECTION

SECTION 16990

FACILITIES FOR CENTERPOINT ENERGY'S USE

PART 1: GENERAL

1.01 Section Includes:

A. Details for facilities constructed by this Contractor for CenterPoint Energy's use.

1.02 CENTERPOINT ENERGY TERMS AND CONDITIONS PACKAGE

A. CenterPoint Energy will provide a Terms and Conditions Package which outlines requirements for electric service and provides construction details for underground duct banks, conduit stub-ups at terminal poles and transformer foundations. The CenterPoint Energy Terms and Conditions Package will not be available until construction starts on the project. Sample copies of CenterPoint Energy standard construction details are included in this specification, for use in bidding.

1.03 CENTERPOINT ENERGY INSPECTIONS

A. All facilities constructed for CenterPoint Energy's use must be inspected by CenterPoint Energy. Make arrangements with CenterPoint Energy for inspections.

1.04 MEASUREMENT AND PAYMENT

A. No separate payment will be provided for work performed under this Section. Include the cost for this work in the lump sum base bid.

B. Refer to Section 01270 – Measurement and Payment.

PART 2 PRODUCTS

2.01 PVC CONDUIT

A. CenterPoint Energy's Terms and Conditions document, when it becomes available, will indicate the minimum grade of PVC conduit to be used is Type EB. Do not use Type EB PVC conduit, use Schedule 40 PVC conduit in CenterPoint Energy duct banks.

PART 3: EXECUTION

A. The "Typical" constructions documents that follow are a sample only.

062785/040104

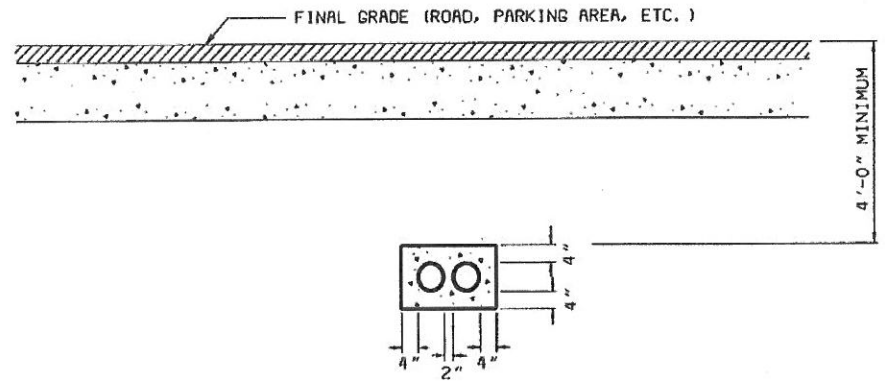

2 - 6"
CONDUITS

NOTE:
THE CUSTOMER AND/OR ITS CONTRACTOR IS TO REQUEST A PRECONSTRUCTION MEETING PRIOR TO STARTING CONSTRUCTION BY CALLING (713) 207-6229.

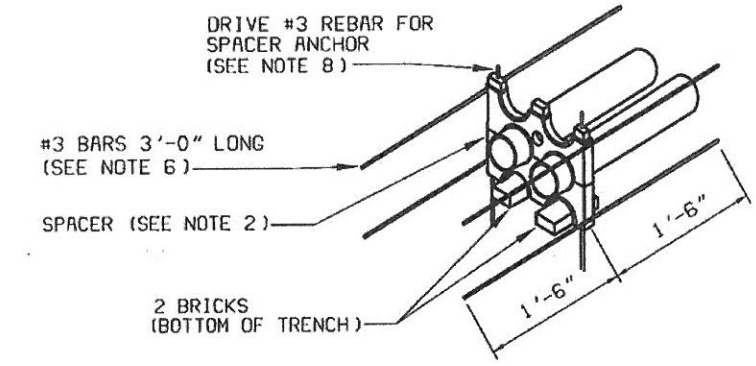

NOTES:
1. CONDUIT TO BE PVC, MINIMUM GRADE TYPE EB.
2. SPACERS SHOULD BE INSTALLED NOT MORE THAN 10'-0" APART.
3. CONDUITS TERMINATING AT MANHOLES SHOULD BE SLOPED 0.5% DOWN TOWARD MANHOLE.
4. ALL EXTERIOR CONCRETE COVER DIMENSIONS ARE MINIMUM.
5. CONCRETE SHALL BE IN ACCORDANCE WITH CNP SPECIFICATION 007-221-01, LATEST REVISION.
6. PLACE REINFORCING BARS IN 4 CORNERS OF THE CONCRETE WHERE SPACERS ARE USED.
7. ON COLD JOINT CONCRETE POUR USE #5 REBAR (3'-0" IN LENGTH, EXPOSED 1'-6").
8. LENGTH OF REBAR FOR SPACER ANCHOR WILL VARY PER DUCT BANK HEIGHT.
9. CONDUITS ENDS SHALL BE PLUGGED WITH A DUCT CAP OR OTHER TYPE OF CAPPING DEVICE.
10. **A ONE FOOT (1') VERTICAL CLEARANCE MUST BE MAINTAINED BETWEEN CNP'S DUCTBANK AND ALL NON-CNP FACILITIES CROSSING THE DUCTBANK.**
11. **A FIVE FOOT (5') HORIZONTAL CLEARANCE MUST BE MAINTAINED BETWEEN CNP'S DUCTBANK AND ALL NON-CNP FACILITIES RUNNING PARALLEL TO THE DUCTBANK (JOINT TRENCHING NOT PERMITTED).**
12. INSTALL JET LINE IN ALL CONDUITS AND A #14 AWG WIRE IN ONE CONDUIT.

THREE PHASE DUCTBANK FEEDER
BASED ON DISTRIBUTION STANDARD DLFS2C

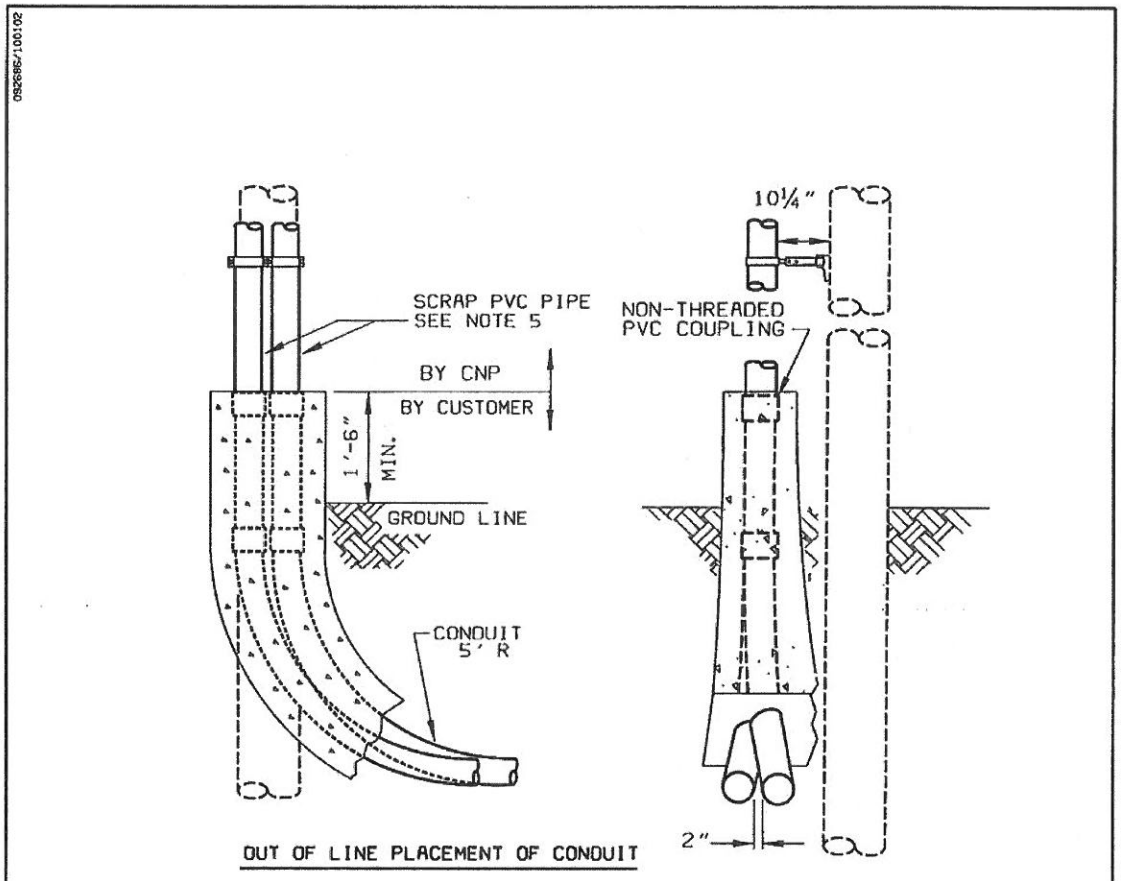

NOTES:

1. CONDUIT BENDS AT TERMINAL POLE SHALL BE PVC.
2. BRACE THE POLE SECURELY BEFORE TRENCHING.
3. INSTALL CONDUIT BENDS TO BASE OF POLE. ADD PORTIONS OF STRAIGHT CONDUIT AS NECESSARY TO OBTAIN THE PROPER HEIGHT ABOVE FINAL GRADE.
4. ATTACH COUPLING TO END OF CONDUIT.
5. INSERT, **BUT DO NOT GLUE**, A SHORT PIECE OF SCRAP PVC CONDUIT INTO THE TOP COUPLING. TIE CONDUIT TO BRACKET.
6. FORM AREA AROUND PEDESTAL TO THE TOP OF THE COUPLING. FORM PEDESTAL SO THAT NO CONCRETE WILL CONTACT POLE.
7. AFTER INSPECTION BY CNP, POUR CONCRETE TO TOP OF COUPLINGS.
8. ALL CONDUITS SHALL HAVE A MINIMUM 4" CONCRETE COVER.

TERMINAL POLE CONDUIT
PLACEMENT 12KV & 35 KV
BASED ON DISTRIBUTION STANDARD 65-500

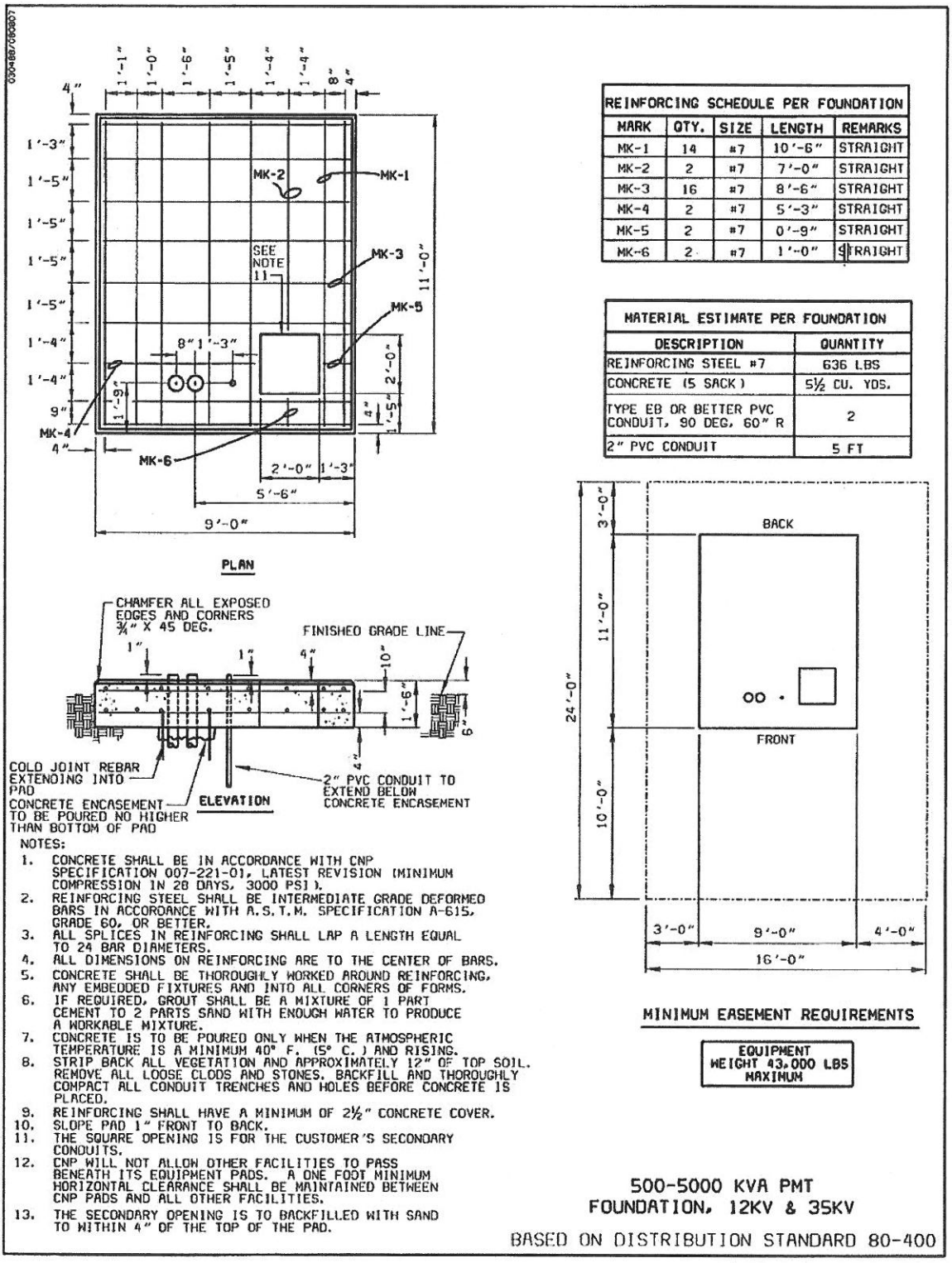

REINFORCING SCHEDULE PER FOUNDATION				
MARK	QTY.	SIZE	LENGTH	REMARKS
MK-1	14	#7	10'-6"	STRAIGHT
MK-2	2	#7	7'-0"	STRAIGHT
MK-3	16	#7	8'-6"	STRAIGHT
MK-4	2	#7	5'-3"	STRAIGHT
MK-5	2	#7	0'-9"	STRAIGHT
MK-6	2	#7	1'-0"	STRAIGHT

MATERIAL ESTIMATE PER FOUNDATION	
DESCRIPTION	QUANTITY
REINFORCING STEEL #7	636 LBS
CONCRETE (5 SACK)	5½ CU. YDS.
TYPE EB OR BETTER PVC CONDUIT, 90 DEG, 60" R	2
2" PVC CONDUIT	5 FT

NOTES:

1. CONCRETE SHALL BE IN ACCORDANCE WITH CNP SPECIFICATION 007-221-01, LATEST REVISION (MINIMUM COMPRESSION IN 28 DAYS, 3000 PSI).
2. REINFORCING STEEL SHALL BE INTERMEDIATE GRADE DEFORMED BARS IN ACCORDANCE WITH A.S.T.M. SPECIFICATION A-615, GRADE 60, OR BETTER.
3. ALL SPLICES IN REINFORCING SHALL LAP A LENGTH EQUAL TO 24 BAR DIAMETERS.
4. ALL DIMENSIONS ON REINFORCING ARE TO THE CENTER OF BARS.
5. CONCRETE SHALL BE THOROUGHLY WORKED AROUND REINFORCING, ANY EMBEDDED FIXTURES AND INTO ALL CORNERS OF FORMS.
6. IF REQUIRED, GROUT SHALL BE A MIXTURE OF 1 PART CEMENT TO 2 PARTS SAND WITH ENOUGH WATER TO PRODUCE A WORKABLE MIXTURE.
7. CONCRETE IS TO BE POURED ONLY WHEN THE ATMOSPHERIC TEMPERATURE IS A MINIMUM 40° F. (5° C.) AND RISING.
8. STRIP BACK ALL VEGETATION AND APPROXIMATELY 12" OF TOP SOIL. REMOVE ALL LOOSE CLODS AND STONES. BACKFILL AND THOROUGHLY COMPACT ALL CONDUIT TRENCHES AND HOLES BEFORE CONCRETE IS PLACED.
9. REINFORCING SHALL HAVE A MINIMUM OF 2½" CONCRETE COVER.
10. SLOPE PAD 1" FRONT TO BACK.
11. THE SQUARE OPENING IS FOR THE CUSTOMER'S SECONDARY CONDUITS.
12. CNP WILL NOT ALLOW OTHER FACILITIES TO PASS BENEATH ITS EQUIPMENT PADS. A ONE FOOT MINIMUM HORIZONTAL CLEARANCE SHALL BE MAINTAINED BETWEEN CNP PADS AND ALL OTHER FACILITIES.
13. THE SECONDARY OPENING IS TO BACKFILLED WITH SAND TO WITHIN 4" OF THE TOP OF THE PAD.

500-5000 KVA PMT
FOUNDATION, 12KV & 35KV

BASED ON DISTRIBUTION STANDARD 80-400

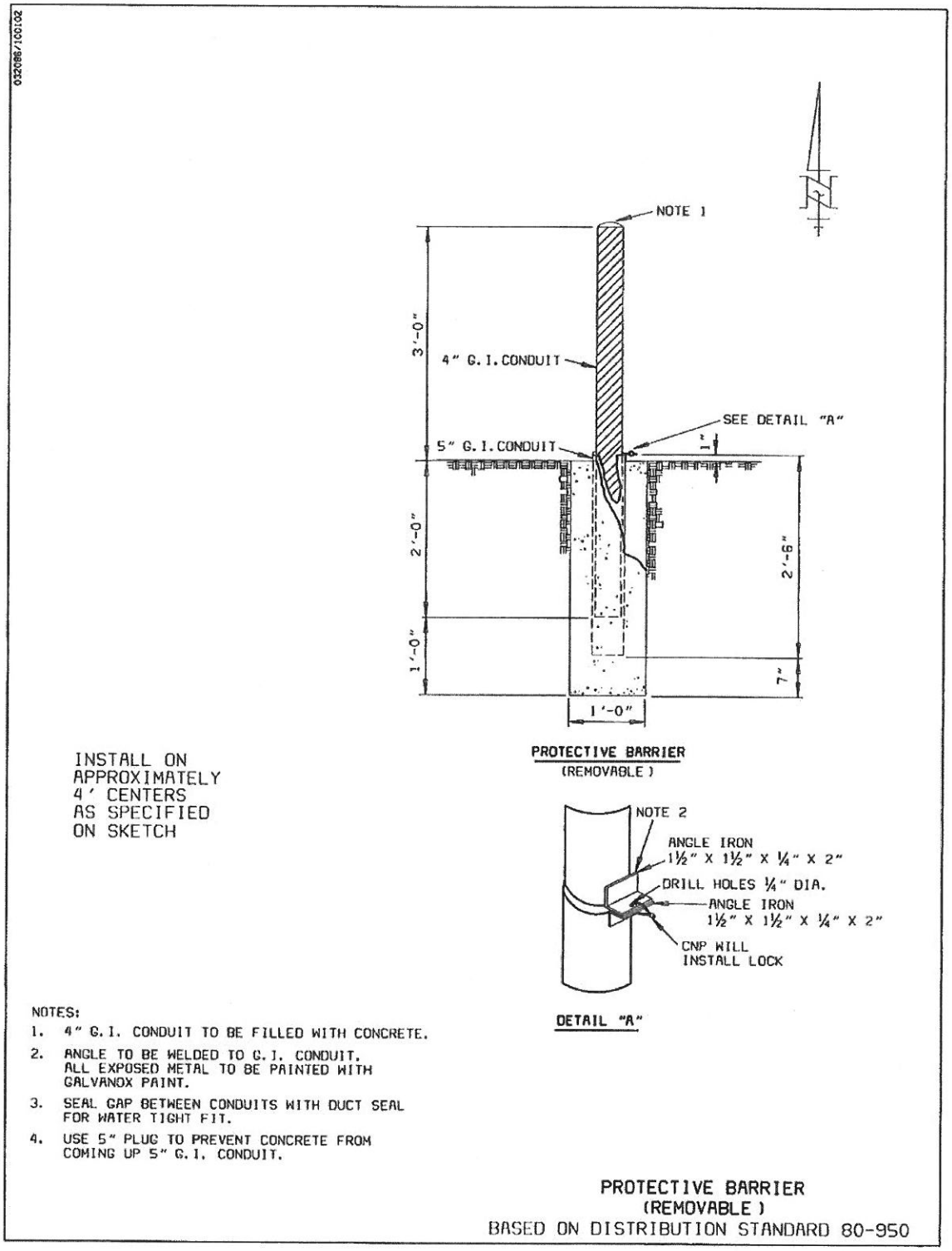
NOTE 1
3'-0"
4" G.I. CONDUIT
SEE DETAIL "A"
5" G.I. CONDUIT
1"
2'-0"
2'-6"
1'-0"
7"
1'-0"
PROTECTIVE BARRIER
(REMOVABLE)
INSTALL ON APPROXIMATELY 4' CENTERS AS SPECIFIED ON SKETCH
NOTE 2
ANGLE IRON 1½" X 1½" X ¼" X 2"
DRILL HOLES ¼" DIA.
ANGLE IRON 1½" X 1½" X ¼" X 2"
CNP WILL INSTALL LOCK
DETAIL "A"
NOTES:
1. 4" G.I. CONDUIT TO BE FILLED WITH CONCRETE.
2. ANGLE TO BE WELDED TO G.I. CONDUIT. ALL EXPOSED METAL TO BE PAINTED WITH GALVANOX PAINT.
3. SEAL GAP BETWEEN CONDUITS WITH DUCT SEAL FOR WATER TIGHT FIT.
4. USE 5" PLUG TO PREVENT CONCRETE FROM COMING UP 5" G.I. CONDUIT.
PROTECTIVE BARRIER
(REMOVABLE)
BASED ON DISTRIBUTION STANDARD 80-950

END OF SECTION