CITY OF HOUSTON
DEPARTMENT OF PUBLIC WORKS AND ENGINEERING
ENGINEERING AND CONSTRUCTION

PROJECT MANUAL
24-Inch Water Line along West Bellfort
WBS No. S-000900-0125-4

VOLUME 1 of 1

Divisions 00 through 16

February 2015

Kuo & Associates, Inc.
10700 Richmond Avenue, Suite 113
Houston, Texas 77042
(713) 975-8769
Texas Firm Registration No. F-4578

STATE OF TEXAS
KUTUBUL A. M. MAINUDDIN
93532
LICENSED
PROFESSIONAL ENGINEER

3/2/15

Document 00010

TABLE OF CONTENTS

NOTE: Bold capitalized Specification Sections are included in the City of Houston Department of Public Works and Engineering Standard Construction Specifications for Wastewater Collection Systems, Water Lines, Storm Drainage, Street Paving, and Traffic located here: http://edocs.publicworks.houstontx.gov/engineering-and-construction/specifications/division-02-16-standard-specifications.html; and are incorporated in Project Manuals by reference as if copied verbatim. Documents listed "for filing" are to be provided by Bidder and are not included in this Project Manual unless indicated for example only. The Document numbers and titles hold places for actual documents to be submitted by Contractor during Bid, post-bid, or construction phase of the Project. Specification Sections marked with an asterisk (*) are amended by a supplemental specification, printed on blue paper and placed in front of the Specification it amends. Documents in the 200, 300 and 400 series of Division 00, except for Document 00410B – Bid Form, Part B, are not part of the Contract.

Doc. No. **Document Title** **Doc. Date**

INTRODUCTORY INFORMATION

00010 Table of Contents 12-18-2014
00015 List of Drawings 12-18-2014
00041 List of Pre-qualified Asbestos & Lead Abatement Contractors 03-21-2012

BIDDING REQUIREMENTS

INSTRUCTIONS TO BIDDERS

00200 Instructions to Bidders 03-01-2014
00210 Supplementary Instructions to Bidders 07-01-2013
00220 Request for Bid Information 06-11-2004

INFORMATION AVAILABLE TO BIDDERS
00320 Geotechnical Information 09-02-2005
00340 Environmental Information 09-14-2005

BID FORMS AND SUPPLEMENTS
00410 Bid Form, Parts A & B 08-01-2013
00430 Bidder's Bond (For filing; Example Form) 02-01-2004
00450 Bidder's Statement of MWBE/PDBE/DBE Status 03-09-2007
00452 Contractor Submission List - Fair Campaign Ordinance 04-30-2004
00453 Bidder's Statement of Residency 02-01-2004
00454 Affidavit of Non-interest 02-01-2004
00455 Affidavit of Ownership or Control 09-04-2007
00457 Conflict of Interest Questionnaire…… 02-28-2006
00459 Contractor's Statement Regarding Previous Contracts Subject to EEO 02-01-2004

Doc. No.	Document Title	Doc. Date
00460	(POP-1) Pay or Play Acknowledgement Form	07-03-2012
00470	Bidder's MWSBE Participation Plan	08-01-2013
00471	Pre-bid Good Faith Efforts	07-01-2013
00472	Bidder's Goal Deviation Request	07-01-2013

POST-BID PROCEDURES

00495	Post-bid Procedures	08-01-2013

CONTRACTING REQUIREMENTS

AGREEMENT

00500	Form of Business	02-01-2004
00501	Resolution of Contractor	02-01-2010
00520	Agreement	08-01-2013
00570	Contractor's Revised MWSBE Participation Plan	08-01-2013
00571	Record of Post-Award Good Faith Efforts	08-01-2013
00572	Contractor's Request for Plan Deviation	08-01-2013

BONDS AND CERTIFICATES

00600	List of Proposed Subcontractors and Suppliers	07-01-2013
00601	Drug Policy Compliance Agreement	02-01-2004
00602	Contractor's Drug Free Workplace Policy (For filing)	
00604	History of OSHA Actions and List of On-the-job Injuries	02-01-2004
00605	List of Safety Impact Positions	02-01-2004
00606	Contractor's Certification of No Safety Impact Positions	02-01-2004
00607	Certification Regarding Debarment, Suspension, and Other Responsibility Matters	02-01-2004
00610	Performance Bond	05-17-2005
00611	Statutory Payment Bond	05-17-2005
00612	One-year Maintenance Bond	05-17-2005
00613	One-year Surface Correction Bond	05-17-2005
00620	Affidavit of Insurance (with attached Certificates of Insurance)	02-01-2004
00622	Name and Qualifications of Proposed Superintendent (For filing)	
00624	Affidavit of Compliance with Affirmative Action Program	02-01-2004
00630	(POP-2) Certification of Compliance with Pay or Play Program	07-03-2012
00631	(POP-3) City of Houston Pay or Play Program – List of Subcontractors	07-03-2012
00633	Equal Employment Opportunity–Certification By Material Suppliers	02-01-2010
00642	Monthly Subcontractor Payment Reporting Form	02-01-2010
00646	Payment Notification Explanation of Withholding	02-01-2010

GENERAL CONDITIONS

00700	General Conditions	08-01-2013

Doc. No.	Document Title	Doc. Date
SUPPLEMENTARY CONDITIONS		
00800	Supplementary Conditions	08-01-2013
00805	Equal Employment Opportunity Program Requirements	05-01-2012
00808	Requirements for the City of Houston Program for Minority, Women, and Small Business Enterprises (MWSBE), and Persons with Disabilities Business Enterprises (PDBE) Program	08-01-2013
00820	Wage Scale for Engineering Construction	02-01-2014
00830	Trench Safety Geotechnical Information	02-01-2004
00840	Pay or Play Program Requirements	07-03-2012
ADDENDA AND MODIFICATIONS		
00931	Request for Information	02-01-2004

SPECIFICATIONS

DIVISION 1 - GENERAL REQUIREMENTS

01110	Summary of Work	12-18-2014
01145	Use of Premises	01-01-2011
01255	Change Order Procedures	08-01-2003
01270	Measurement and Payment	08-01-2003
01292	Schedule of Values	08-01-2003
01312	Coordination and Meetings	08-01-2003
01321	Construction Photographs	08-01-2003
01325	Construction Schedule	08-01-2003
01326	Construction Schedule (Bar Chart)	08-01-2003
01330	Submittal Procedures	08-01-2003
01340	Shop Drawings, Product Data, and Samples	08-01-2003
01351	Environmental Safety and Worker Protection	01-01-2011
01410	TPDES Requirements (with Attachments)	02-01-2011
01422	Reference Standards	08-01-2003
01450	Contractor's Quality Control	08-01-2003
01452	Inspection Services	08-01-2003
01454	Testing Laboratory Services	08-01-2003
01502	Mobilization	08-01-2008
01504	Temporary Facilities and Controls	01-01-2011
01506	Diversion Pumping	08-01-2003
01520	Temporary Field Office	02-08-2012
01554	Traffic Control and Street Signs	07-01-2012
01555	Traffic Control and Regulation	01-01-2011
01562	Tree and Plant Protection	01-01-2011
01570	Storm Water Pollution Control	01-26-2012
01575	Stabilized Construction Exit	02-01-2011
01576	Waste Material Disposal	08-01-2003
01578	Control of Ground and Surface Water	01-01-2011
01580	Project Identification Signs	08-01-2003

Doc. No.	Document Title	Doc. Date
01581	Excavation in Public Way Permit Signs	08-01-2003
01610	Basic Product Requirements	01-01-2011
01630	Product Substitution Procedures	08-01-2003
01725	Field Surveying	01-01-2011
01731	Cutting and Patching	01-01-201101732
01740	Site Restoration	08-01-2003
01755	Starting Systems	08-01-2003
01770	Closeout Procedures	08-01-2003
01782(LD)	Operations and Maintenance Personnel Instruction	08-01-1995
01785	Project Record Documents	08-01-2003

DIVISION 2 - SITE WORK

02081	**CAST-IN-PLACE CONCRETE MANHOLES**	**01-01-2011**
02082	**PRECAST CONCRETE MANHOLES**	**01-01-2011**
02083	**FIBERGLASS MANHOLES**	**01-01-2011**
02084	**FRAMES, GRATES, RINGS, AND COVERS**	**08-01-2008**
02085	**VALVE BOXES, METER BOXES, AND METER VAULTS**	**01-01-2011**
02086	**ADJUSTING MANHOLES, INLETS, AND VALVE BOXES TO GRADE**	**01-01-2011**
02087	**BRICK MANHOLE FOR STORM SEWERS**	**10-01-2002**
02136	**WASTE MATERIAL HANDLING, TESTING AND DISPOSAL**	**01-01-2011**
02221	**REMOVING EXISTING PAVEMENTS AND STRUCTURES**	**07-01-2009**
02222	**ABANDONMENT OF SEWERS**	**01-01-2011**
02233	**CLEARING AND GRUBBING**	**01-01-2011**
02260	**TRENCH SAFETY SYSTEM**	**02-01-2011**
02315	**ROADWAY EXCAVATION**	**07-01-2009**
02316	**EXCAVATION AND BACKFILL FOR STRUCTURES**	**01-01-2011**
02317	**EXCAVATION AND BACKFILL FOR UTILITIES**	**01-01-2011**
02318	**EXTRA UNIT PRICE WORK FOR EXCAVATION AND BACKFILL**	**01-01-2011**
02319	**BORROW**	**01-01-2011**
02320	**UTILITY BACKFILL MATERIALS**	**01-01-2011**
02321	**CEMENT STABILIZED SAND**	**01-01-2011**
02330	**EMBANKMENT**	**10-01-2002**
02336	**LIME-STABILIZED SUBGRADE**	**10-01-2002**
02337	**LIME/FLY-ASH STABILIZED SUBGRADE**	**10-01-2002**
02338	**PORTLAND CEMENT STABILIZED SUBGRADE**	**10-01-2002**
02371(LD)	Erosion Control and Vegetation Mat	10-15-1995
02400	**TUNNEL SHAFTS**	**01-01-2011**
02425(LD)	Tunnel Excavation and Primary Liner for Water Mains	07-01-2002
02426	**SEWER LINE IN TUNNELS**	**10-01-2002**
02427	**PLASTIC LINER FOR LARGE-DIAMETER CONCRETE SEWERS AND STRUCTURES**	**10-01-2002**
02431	**TUNNEL GROUT**	**10-01-2002**

Doc. No.	Document Title	Doc. Date
02441(LD)	Microtunneling Tunnels	01-01-2011
02447	AUGERING PIPE AND CONDUIT	10-01-2002
02448	PIPE AND CASING AUGERING FOR SEWERS	10-01-2002
02465	DRILLED SHAFT FOUNDATIONS	10-01-2002
02476	CAISSON FOR LIFT STATION	01-01-2011
02501	DUCTILE IRON PIPE AND FITTINGS	02-01-2011
02502	STEEL PIPE AND FITTINGS	01-01-2011
02503	COPPER TUBING	10-01-2002
02504	CENTRIFUGALLY CAST FIBERGLASS PIPE	02-01-2011
02505	HIGH DENSITY POLYETHYLENE (HDPE) SOLID AND PROFILE WALL PIPE	02-01-2011
02506	POLYVINYL CHLORIDE PIPE	01-01-2011
02507	PRESTRESSED CONCRETE CYLINDER PIPE	01-01-2011
02508	EXTRA STRENGTH CLAY PIPE	02-01-2011
02509	FIBERGLASS REINFORCED PIPE FOR PRESSURE MAINS	01-01-2011
02511	WATER LINES	01-01-2011
02512	WATER TAP AND SERVICE LINE INSTALLATION	04-27-2012
02513	WET CONNECTIONS	10-01-2002
02514	DISINFECTION OF WATER LINES	01-01-2011
02515	HYDROSTATIC TESTING OF PIPELINES	01-01-2011
02516	CUT, PLUG, AND ABANDONMENT OF WATER LINES	01-01-2011
02517	WATER LINE IN TUNNELS	10-01-2002
02518	STEEL PIPE AND FITTINGS FOR LARGE-DIAMETER WATER LINES	01-01-2011
02520	FIRE HYDRANTS	05-05-2011
02521	GATE VALVES	01-01-2011
02522	BUTTERFLY VALVES	01-01-2011
02523	PRESSURE REDUCING VALVES	10-01-2002
02524	AIR RELEASE AND VACUUM RELIEF VALVES	01-01-2011
02525	TAPPING SLEEVES AND VALVES	01-01-2011
02526	WATER METERS	01-01-2011
02527	POLYURETHANE COATINGS ON STEEL OR DUCTILE IRON PIPE	10-01-2002
02528	POLYETHYLENE WRAP	01-01-2011
02531	GRAVITY SANITARY SEWERS	01-01-2011
02532	SANITARY SEWER FORCE MAINS	01-01-2011
02533	ACCEPTANCE TESTING FOR SANITARY SEWERS	01-01-2011
02534	SANITARY SEWER SERVICE STUBS OR RECONNECTIONS	01-01-2011
02550	SLIPLINING SANITARY SEWERS	01-01-2011
02553	POINT REPAIR AND OBSTRUCTION REMOVALS	01-01-2011
02555	MANHOLE REHABILITATION	01-01-2011
02557	FOLDED AND FORMED PIPE	01-01-2011
02558	CLEANING AND TELEVISION INSPECTION	01-01-2011
02571	CRUSHING SANITARY SEWERS	01-01-2011

Doc. No.	Document Title	Doc. Date
02581	STREET LIGHTING CONDUIT	10-01-2002
02582	TRAFFIC SIGNAL POLE	07-01-2009
02611	REINFORCED CONCRETE PIPE	02-01-2011
02612	PRECAST REINFORCED CONCRETE BOX SEWERS	10-01-2002
02613	BAR WRAPPED STEEL CYLINDER PIPE	01-01-2011
02621	GEOTEXTILE	10-01-2002
02631	STORM SEWERS	01-26-2012
02632	CAST-IN-PLACE INLETS, HEADWALLS, AND WINGWALLS	10-01-2002
02633	PRECAST CONCRETE INLETS, HEADWALLS, AND WINGWALLS	10-01-2002
02642	CORRUGATED METAL PIPE	10-01-2002
02643	PLATE CULVERT STRUCTURES	10-01-2002
02662	PIPING, VALVES, FITTINGS, AND ACCESSORIES FOR WATER STORAGE TANKS	01-01-2011
02711	HOT MIX ASPHALT BASE COURSE	07-01-2009
02712	CEMENT STABILIZED BASE COURSE	10-01-2002
02713	RECYCLED CRUSHED CONCRETE BASE COURSE	07-01-2009
02714	FLEXIBLE BASE COURSE FOR TEMPORARY DRIVEWAYS	07-01-2009
02716(LD)	Cement Stabilized Sand Base	10-06-1997
02741	ASPHALTIC CONCRETE PAVEMENT	07-01-2009
02742	PRIME COAT	10-01-2002
02743	TACK COAT	10-01-2002
02751	CONCRETE PAVING	07-01-2009
02752	CONCRETE PAVEMENT JOINTS	10-01-2002
02753	CONCRETE PAVEMENT CURING	10-01-2002
02754	CONCRETE DRIVEWAYS	09-01-2002
02761	COLORED CONCRETE FOR MEDIANS AND SIDEWALKS	09-01-2002
02762	BLAST CLEANING OF PAVEMENT	10-01-2002
02764	RAISED PAVEMENT MARKERS	07-01-2012
02765	TEMPORARY AND REMOVABLE REFLECTORIZED PAVEMENT MARKINGS	07-01-2012
02767	THERMOPLASTIC PAVEMENT MARKINGS	07-01-2012
02771	CURB, CURB AND GUTTER, AND HEADERS	10-01-2002
02772	CONCRETE MEDIANS AND DIRECTIONAL ISLANDS	10-01-2002
02775	CONCRETE SIDEWALKS	10-01-2002
02811	LANDSCAPE IRRIGATION	10-01-2002
02893	TRAFFIC SIGNAL CONSTRUCTION	07-01-2009
02911	TOPSOIL	10-01-2002
02912	TREE, PLANT, & LANDSCAPE PROTECTION	07-01-2009
02915	TREE PLANTING	01-01-2011
02921	HYDROMULCH SEEDING	01-01-2011
02922	SODDING	07-01-2009
02951	PAVEMENT REPAIR AND RESTORATION	07-01-2009

Doc. No.	Document Title	Doc. Date
02960	**MILLING PAVEMENT**	**07-01-2009**
02983	**REMOVAL AND RESTORATION OF BRICK-PAVED STREETS**	**10-01-2002**
DIVISION 3 – CONCRETE		
03315	**CONCRETE FOR UTILITY CONSTRUCTION**	**10-01-2002**
DIVISION 4 - MORTAR		
04061	**MORTAR**	**10-01-2002**
04210	**BRICK MASONRY FOR UTILITY CONSTRUCTION**	**10-01-2002**
DIVISION 5 – METALS		
05501	Metal Fabrications	01-01-2011
DIVISION 15 – MECHANICAL		
15640	**JOINT BONDING AND ELECTRICAL ISOLATION**	**01-01-2011**
15641	**CORROSION CONTROL TEST STATIONS**	**01-01-2011**
DIVISION 16 – ELECTRICAL		
16640	**CATHODIC PROTECTION FOR PIPELINES**	**01-01-2011**
Texas Department of Transportation Specifications Items		
360	Concrete Pavement	11-01-2014
361	Repair of Concrete Pavement	11-01-2014
420	Concrete Substructures	11-01-2014
438	Cleaning and Sealing Joints	11-01-2014
440	Reinforcement for Concrete	11-01-2014

APPENDIX A – STORM WATER POLLUTION PREVENTION PROGRAM 12-2014

END OF DOCUMENT

Document 00015

LIST OF DRAWINGS

Sheet No.	Drawing Title
1	COVER SHEET, LOCATION MAP, VICINITY MAP
2	INDEX OF SHEETS
3	LEGENDS
4	UTILITY & GENERAL CONSTRUCTION NOTES
5	CONSTRUCTION NOTES
6	SHEET LAYOUT & BORING PLAN
7	SURVEY CONTROL MAP (SHEET 1 OF 2)
8	SURVEY CONTROL MAP (SHEET 2 OF 2)
9	SWING TIES (SHEET 1 OF 2)
10	SWING TIES (SHEET 2 OF 2)
11	24” WATER LINE – W BELLFORT AVE – PLAN – BEGIN TO STA 7+00 (SHEET 1 OF 22)
12	24” WATER LINE – W BELLFORT AVE – PROFILE – BEGIN TO STA 7+00 (SHEET 2 OF 22)
13	24” WATER LINE – W BELLFORT AVE – PLAN – STA 7+00 TO STA 11+00 (SHEET 3 OF 22)
14	24” WATER LINE – W BELLFORT AVE – PROFILE – STA 7+00 TO STA 11+00 (SHEET 4 OF 22)
15	24” WATER LINE – W BELLFORT AVE – PLAN – STA 11+00 TO STA 16+00 (SHEET 5 OF 22)
16	24” WATER LINE – W BELLFORT AVE – PROFILE – STA 11+00 TO STA 16+00 (SHEET 6 OF 22)
17	24” WATER LINE – W BELLFORT AVE – PLAN – STA 16+00 TO STA 20+50 (SHEET 7 OF 22)
18	24” WATER LINE – W BELLFORT AVE – PROFILE – STA 16+00 TO STA 20+50 (SHEET 8 OF 22)
19	24” WATER LINE – W BELLFORT AVE – PLAN – STA 20+50 TO STA 25+00 (SHEET 9 OF 22)
20	24” WATER LINE – W BELLFORT AVE – PROFILE – STA 20+50 TO STA 25+00 (SHEET 10 OF 22)
21	24” WATER LINE – W BELLFORT AVE – PLAN – STA 25+00 TO STA 30+00 (SHEET 11 OF 22)
22	24” WATER LINE – W BELLFORT AVE – PROFILE – STA 25+00 TO STA 30+00 (SHEET 12 OF 22)
23	24” WATER LINE – W BELLFORT AVE – PLAN – STA 30+00 TO STA 35+00 (SHEET 13 OF 22)
24	24” WATER LINE – W BELLFORT AVE – PROFILE – STA 30+00 TO STA 35+00 (SHEET 14 OF 22)
25	24” WATER LINE – W BELLFORT AVE – PLAN – STA 35+00 TO STA 39+50 (SHEET 15 OF 22)
26	24” WATER LINE – W BELLFORT AVE – PROFILE – STA 35+00 TO STA 39+50 (SHEET 16 OF 22)
27	24” WATER LINE – W BELLFORT AVE – PLAN – STA 39+50 TO STA 44+00 (SHEET 17 OF 22)
28	24” WATER LINE – W BELLFORT AVE – PROFILE – STA 39+50 TO STA 44+00 (SHEET 18 OF 22)
29	24” WATER LINE – W BELLFORT AVE – PLAN – STA 44+00 TO STA 48+00 (SHEET 19 OF 22)
30	24” WATER LINE – W BELLFORT AVE – PROFILE – STA 44+00 TO STA 48+00 (SHEET 20 OF 22)
31	24” WATER LINE – W BELLFORT AVE – PLAN – STA 48+00 TO END (SHEET 21 OF 22)
32	24” WATER LINE – W BELLFORT AVE – PROFILE – STA 48+00 TO END (SHEET 22 OF 22)
33	PIPE DETAILS (SHEET 1 OF 2)
34	PIPE DETAILS (SHEET 2 OF 2)
35	EXCAVATION, BEDDING & BACKFILL DETAIL
36	TUNNEL AND CASING DETAILS
37	ISOLATION VALVE DETAILS
38	DRAIN LINE VALVE DETAILS
39	LARGE DIAMETER WATER LINE MANHOLE DETAILS
40	STANDARD EXTRA DEPTH MANHOLE DETAILS
41	AIR VALVE AND MANHOLE DETAILS (SHEET 1 OF 2)
42	AIR VALVE AND MANHOLE DETAILS (SHEET 2 OF 2)
43	CONSTRUCTION SIGN

44	CATHODIC PROTECTION DETAILS FOR JOINT BONDING (SHEET 1 OF 2)
45	CATHODIC PROTECTION DETAILS FOR JOINT BONDING (SHEET 2 OF 2)
46	CATHODIC PROTECTION DETAILS FOR TEST STATIONS (SHEET 1 OF 3)
47	CATHODIC PROTECTION DETAILS FOR TEST STATIONS (SHEET 2 OF 3)
48	CATHODIC PROTECTION DETAILS FOR TEST STATIONS (SHEET 3 OF 3)
49	CATHODIC PROTECTION DETAILS FOR TEST STATIONS AND ANODES (SHEET 1 OF 2)
50	CATHODIC PROTECTION DETAILS FOR TEST STATIONS AND ANODES (SHEET 2 OF 2)
51	CATHODIC PROTECTION RECTIFIER AND DEEP ANODE GROUND BED (SHEET 1 OF 2)
52	CATHODIC PROTECTION RECTIFIER AND DEEP ANODE GROUND BED (SHEET 2 OF 2)
53	STANDARD SMALL DIAMETER WATER LINE DETAILS (SHEET 1 OF 3)
54	STANDARD SMALL DIAMETER WATER LINE DETAILS (SHEET 2 OF 3)
55	STANDARD SMALL DIAMETER WATER LINE DETAILS (SHEET 3 OF 3)
56	STANDARD SANITARY SEWER DETAILS (SHEET 1 OF 2)
57	STANDARD SANITARY SEWER DETAILS (SHEET 2 OF 2)
58	MISCELLANEOUS SANITARY SEWER AND STORM SEWER DETAILS
59	STANDARD STORM SEWER DETAILS (SHEET 1 OF 7)
60	STANDARD STORM SEWER DETAILS (SHEET 2 OF 7)
61	STANDARD STORM SEWER DETAILS (SHEET 3 OF 7)
62	STANDARD STORM SEWER DETAILS (SHEET 4 OF 7)
63	STANDARD STORM SEWER DETAILS (SHEET 5 OF 7)
64	STANDARD STORM SEWER DETAILS (SHEET 6 OF 7)
65	STANDARD STORM SEWER DETAILS (SHEET 7 OF 7)
66	STANDARD PAVEMENT DETAILS (SHEET 1 OF 2)
67	STANDARD PAVEMENT DETAILS (SHEET 2 OF 2)
68	PAVEMENT REPAIR DETAILS
69	STREET CUT DETAILS
70	STANDARD PAVEMENT MARKING (SHEET 1 OF 4)
71	STANDARD PAVEMENT MARKING (SHEET 2 OF 4)
72	STANDARD PAVEMENT MARKING (SHEET 3 OF 4)
73	STANDARD PAVEMENT MARKING (SHEET 4 OF 4)
74	DRIVEWAY DETAILS
75	SIDEWALK DETAILS
76	STANDARD WHEEL CHAIR RAMP DETAILS (SHEET 1 OF 2)
77	STANDARD WHEEL CHAIR RAMP DETAILS (SHEET 2 OF 2)
78	STANDARD SIGNING DETAILS (SHEET 1 OF 2)
79	STANDARD SIGNING DETAILS (SHEET 2 OF 2)
80	SUMMARY OF SMALL SIGNS
81	TXDOT FULL DEPTH REPAIR FOR CONCRETE PAVEMENT DETAILS
82	TRAFFIC CONTROL NOTES
83	TRAFFIC CONTROL PLAN PROJECT OVERALL LAYOUT
84	TRAFFIC CONTROL PLAN PHASE 1 BEGIN TO STA 19+00
85	TRAFFIC CONTROL PLAN PHASE 1 STA 19+00 TO STA 39+50
86	TRAFFIC CONTROL PLAN PHASE 1 STA 39+50 TO END
87	TRAFFIC CONTROL PLAN PHASE 2 US HIGHWAY 90 (SOUTH MAIN STREET)
88	TRAFFIC CONTROL PLAN PHASE 3
89	ROLLING CLOSURE DETAIL OF A 4-LANE DIVIDED STREET
90	TRAFFIC CONTROL PLAN DETAIL 1
91	TRAFFIC CONTROL PLAN DETAIL 2

92	TRAFFIC CONTROL PLAN DETAIL 3
93	STORM WATER POLLUTION PREVENTION PLAN SHEET 1 OF 4
94	STORM WATER POLLUTION PREVENTION PLAN SHEET 2 OF 4
95	STORM WATER POLLUTION PREVENTION PLAN SHEET 3 OF 4
96	STORM WATER POLLUTION PREVENTION PLAN SHEET 4 OF 4
97	STORM WATER POLLUTION PREVENTION PLAN STANDADR DETAILS
98	TREE PROTECTION PLAN SHEET 1 OF 6
99	TREE PROTECTION PLAN SHEET 2 OF 6
100	TREE PROTECTION PLAN SHEET 3 OF 6
101	TREE PROTECTION PLAN SHEET 4 OF 6
102	TREE PROTECTION PLAN SHEET 5 OF 6
103	TREE PROTECTION PLAN SHEET 6 OF 6

END OF DOCUMENT

Document 00041

LIST OF PRE-QUALIFIED ASBESTOS/LEAD ABATEMENT, MOLD & SOIL REMEDIATION, DEMOLITION AND PETROLEUM STORAGE TANK REMOVAL CONTRACTORS

1.01 DOCUMENT INCLUDES

A. Authorization

B. List of Authorized Contractors.

2.0 RELATED DOCUMENTS

A. Section 13280 – Hazardous Materials Remediation

B. Section 13281&13282 – Abatement of Asbestos/Lead Containing Materials

3.0 AUTHORIZATION

A. The list of Contractors Pre-qualified for Asbestos/Lead Abatement, Mold & Soil Remediation, Demolition & Petroleum Storage Tank Removal ("List") was authorized on March 21, 2012, by City of Houston Council Motion No. 12-0180.

B. Only those firms on the List can be utilized by Bidder in subcontracting for asbestos & lead abatement, mold & soil remediation, demolition & petroleum storage tank removal included in the Work.

C. The List is administered by General Services Department. All inquiries should be directed to Gabriel Mussio (832-393-8079).

4.0 LIST OF AUTHORIZED CONTRACTORS

A. As of the date specified in paragraph 3.0.A., all contractors listed in paragraph 4.0.B were licensed in the State of Texas for the type of work. Authorized Contractors must maintain there license to be on the list.

B. Authorized Contractors:

1. AAR Incorporated, 6640 Signat Drive, Houston, Texas 77041

2. A & M Environmental, LLC, 6536 Supply Row, Houston, Texas 77011

3. ARC Abatement Inc., 6827 Signat Drive, Houston, Texas 77041

4. AIA General Contractors, Inc., 18331 Running Vine Lane, Spring, Texas 77379

5. Arrow Services, Inc., 10202 Airline Drive, Suite A, Houston, Texas 77037

6. Basic Environmental Group, LLC., 1839 Key Biscayne Court, Houston,

Texas 77065

7. Cherry Environmental Services, Inc., 4501 Cherry Lane, Santa Fe, Texas 77517

8. Clark-Tech Environmental Systems, Inc., 1515 Globe Street, Houston, Texas 77034

9. CRG Environmental Services, LLC., 2504 Avenue I, Rosenberg, Texas 77471

10. DNB Enterprises, Inc., 12969 West Hardy, Houston, Texas 77037

11. Dunphey Petroleum Services, Inc., 3505 Daphne, Houston, Texas 77021

12. EC Government Services, 5850 San Felipe, Suite 400, Houston, Texas 77057

13. Effective Environmental, Inc., 9950 Chemical Road, Pasadena, Texas 77507

14. GenTech Construction Company, LLC., 2211 West 34th Street, Houston, Texas 77018

15. Hazard Assessment Leaders, Inc., dba HAL, Inc., 5311 Petty Street, Houston, Texas 77007

16. Inland Environmental, Ltd., PO Box 6751, Kingwood, Texas 77325

17. J.T.B. Services, Inc., 9026 Lambright, Houston, Texas 77075

18. NCM, 16421 Aldine Westfield Road, Houston, Texas 77032

19. PfP Abatement Group, LLC., 3823 Shadow Trail Drive, Houston, Texas 77084

20. PEMCO, Inc., PO Box 2009, Pearland, Texas 77588-2009

21. RNDI Companies, Inc., 2255 Ridge Road, Suite 216, Rockwell, Texas 75807

22. Separation Systems Consultants, Inc., 17041 El Camino Real, Suite 200 Houston, Texas 77058

23. Texas Environmental Control, Inc., 4623 Steffani Lane, Houston, Texas 77041

24. Weston Solutions, Inc., 5599 San Felipe, Suite 700, Houston, Texas 77056

25. 1 Priority Environmental Services, Inc., 2573 Gravel Drive, Fort Worth, Texas 76118

END OF DOCUMENT

***\

Document 00200

TABLE OF CONTENTS

INSTRUCTIONS TO BIDDERS

PARA	TITLE	PAGE
1.0	*RELATED DOCUMENTS*	1
2.0	*DEFINITIONS*	1
3.0	*NOTICE TO BIDDERS*	2
4.0	*BID DOCUMENTS*	2
5.0	*EXAMINATION OF DOCUMENTS, SITE, AND LOCAL CONDITIONS*	2
6.0	*INTERPRETATIONS DURING BIDDING*	2
7.0	*ADDENDA*	3
8.0	*SUBSTITUTION OF PRODUCTS*	3
9.0	*PREPARATION OF BIDS*	3
10.0	*BID SUBMISSION*	3
11.0	*BID SECURITY*	4
12.0	*SUBCONTRACTORS AND SUPPLIERS*	4
13.0	*MODIFICATION OR WITHDRAWAL OF BID*	4
14.0	*BID DISQUALIFICATION*	4
15.0	*PREBID MEETING*	5
16.0	*OPENING OF BIDS*	5
17.0	*EVALUATION AND CONSIDERATION OF BIDS*	5
18.0	*ACCEPTANCE OF THE BID*	5

Document 00200

INSTRUCTIONS TO BIDDERS

1.0 *RELATED DOCUMENTS*

A. Document 00210 – Supplementary Instructions to Bidders.

B. Document 00320 – Geotechnical Information.

C. Document 00330 – Existing Conditions.

D. Document 00410 – Bid Form, Parts A & B.

E. Document 00495 – Post-Bid Procedures.

F. Document 00520 – Agreement.

G. Document 00700 – General Conditions.

H. Document 00800 – Supplementary Conditions.

2.0 *DEFINITIONS*

A. Definitions set forth in Document 00700 – General Conditions and in other documents of Project Manual, are applicable to Bid Documents.

B. *Addendum:* Written or graphic instrument issued prior to Bid opening, which clarifies, modifies, corrects, or changes Bid Documents.

C. *Alternate:* The total amount bid for additions to work, as described in Section 01110 – Summary of Work. Each Alternate includes cost of effects on adjacent or related components, and Bidder's overhead and profit.

D. *Bid:* A complete and properly signed offer to perform the Work in accordance with this Document and Document 00210 – Supplementary Instructions to Bidders.

E. *Bid Date:* Date and time set for receipt of Bids as stated in Document 00210 – Supplementary Instructions to Bidders, or as modified by Addenda.

F. *Bid Documents:* Project Manual, Drawings, and Addenda.

G. *Bid Supplement: A* Bid submittal that is required in Document 00410 – Bid Form.

H. *Bidder:* Person or firm, identified in Document 00410B – Bid Form – Part B, including its successors, and its authorized representative.

I. *Code:* Code of Ordinances, Houston, Texas.

J. *Low Bidder:* Apparent successful Bidder that qualifies as a responsible Bidder and that submits Bid with lowest Total Bid Price.

K. *Project Manager:* Person designated in Document 00100 – Advertisement for Bids and Document 00220 – Request for Bid Information to represent the City during bidding and post-bid periods.

L. *Project Manual:* Volume assembled for the Work that includes the bidding requirements, sample forms, Conditions of the Contract, and Specifications.

M. *Security Deposit:* A certified check, cashier's check, or bid bond in the amount of 10 percent of the Total Bid Price.

N. *Total Bid Price:* Total amount bid for performing the Work as identified by Bidder in Document 00410B – Bid Form – Part B, which amount includes:

1. Stipulated Price;

2. Total Base Unit Prices;

3. Total Extra Unit Prices;

4. Total Cash Allowances; and

5. Total Alternates.

3.0 *NOTICE TO BIDDERS*

A. The City of Houston Fair Campaign Ordinance makes it unlawful for a Contractor to offer any contribution to a candidate for City elective office (including elected officers and officers-elect) during a certain period of time prior to and following the award of the Contract by the City Council. The term "Contractor" includes proprietors of proprietorships, all partners of partnerships, and all officers, directors, and holders of 10 percent or more of the outstanding shares of corporations. A statement disclosing the names and business addresses of each of those persons will be required to be submitted with each bid or proposal; for a City Contract. Bidder shall complete and submit Document 00452 – Form A, Contractor Submission List, City of Houston Fair Campaign Ordinance, with its Bid to comply with this requirement. See Chapter 18 of the Code for further information.

B. Chapter 15, Article VIII, of the City's Code provides that no contract shall be let, nor any other business transaction entered into, by the City with any person indebted to the City or a qualifying entity, if the contractor or transaction comes within the provisions of Section 15-1 (c) of the Code. Exceptions are provided in Section 15-126 of the Code. Bidder shall complete and submit Document 00455 – Affidavit of Ownership or Control, with its Bid to comply with this requirement.

C. Neither bidder(s) nor any person acting on bidder(s)'s behalf shall attempt to influence the outcome of the award by the offer, presentation or promise of gratuities, favors, or anything of value to any appointed or elected official or employee of the City of Houston, their families or staff members. All inquiries regarding the solicitation are to be directed to the designated City Representative identified on the first page of the solicitation. Upon issuance of the solicitation through the pre-award phase and up to the date the City Secretary publicly posts notice of any City Council agenda containing the applicable award, aside from bidder's formal response to the solicitation, through the pre-award phase, written requests for clarification during the period officially designated for such purpose by the City Representative, neither bidder(s) nor persons acting on their behalf shall communicate with any appointed or elected official or employee of the City of Houston, their families or staff through written or oral means in an attempt to persuade or influence the outcome of the award or to obtain or deliver information intended to or which could reasonably result in an advantage to any bidder. However, nothing in this paragraph shall prevent a bidder from making public statements to the City Council convened for a regularly scheduled session after the official selection has been made and placed on the City Council agenda for action, or to a City Council committee convened to discuss a recommendation regarding the solicitation.

4.0 *BID DOCUMENTS*

A. The Bid Documents may be obtained at location specified in Document 00210 – Supplementary Instructions to Bidders.

B. The Bid Documents are made available only for the purpose of bidding on the Work. Receipt of Bid Documents does not grant a license for other purposes.

C. On receipt of Bid Documents, Bidder shall verify that documents are legible and complete, compare contents of Project Manual with Document 00010 – Table of Contents, and compare Index of Drawings with Document 00015 – List of Drawings. Bidder shall notify Project Manager if Bid Documents are incomplete.

D. If City of Houston Standard Specifications or Standard Details are required by the Project Manual, Bidder shall refer to Document 00210 – Supplementary Instructions to Bidders for purchase information.

5.0 *EXAMINATION OF DOCUMENTS, SITE, AND LOCAL CONDITIONS*

A. Bidder shall examine Project site, become familiar with local conditions under which the Work shall be performed, conduct appropriate investigations, and correlate personal observations with requirements of the Bid Documents before submitting a Bid.

B. Bidder shall make site investigations to the extent Bidder deems necessary to ascertain extent of subsurface conditions.

C. Failure of Bidder to perform the investigations prior to submitting a Bid does not relieve Bidder of responsibility for investigations, interpretations and proper use of available information in the preparation of its Bid.

D. Bidder shall observe limitations of access to occupied or restricted site as stated in Document 00210 – Supplementary Instructions to Bidders.

6.0 *INTERPRETATIONS DURING BIDDING*

A. Bidder shall immediately submit Document 00220 – Request for Bid Information to Project Manager upon finding errors, discrepancies, or omissions in Bid Documents. Confirmation of receipt of questions by the City is the responsibility of Bidder. Verbal discussions and answers are not binding.

B. Document 00220 – Request for Bid Information must be received at least 10 days before the Bid Date to allow issuance of Addenda in accordance with Paragraph 7.O.D. Replies, if issued, are by Addenda.

7.0 *ADDENDA*

A. Addenda that affect bidding requirements are applicable only during applicable only through issuance of the Notice to Proceed. Addenda that affect the Contract are a part of the Contract.

B. BIDDERS WHO SUBMIT A BID ON THIS PROJECT SHALL BE PRESUMED TO HAVE RECEIVED ALL ADDENDA AND TO HAVE INCLUDED ANY COST THEREOF IN THEIR BIDS, REGARDLESS OF WHETHER THEY ACKNOWLEDGE THE ADDENDA OR NOT.

C. The City will make Addenda available at same location where the Bid Documents may be obtained. The City will notify plan holders of record when Addenda are available. Bidders are responsible for obtaining Addenda after notification.

D. No Addendum will be issued later than noon on Monday before Bid Date, except Addenda with minor clarifications, withdrawing request for Bids, or postponing Bid Date.

8.0 *SUBSTITUTION OF PRODUCTS*

A. No substitutions of Products will be considered during the bidding period.

9.0 *PREPARATION OF BIDS*

A. Bidder shall fill in applicable blanks in Document 00410A&B – Bid Form – Parts A & B and Bid Supplements. In addition, Bidder shall bid all Alternates. Bidder shall properly sign Document 00410B -Bid Form.

B. Bidder shall initial all pages, except signature page, of Document 00410B – Bid Form – Part B.

C. Bidder is responsible for all costs incurred by the Bidder, associated with preparation of its Bid and compliance with Post-bid Procedures.

D. Bidder may not adjust preprinted price on line items stating "Fixed Unit Price" in the description on the Bid Form.

E. Bidder may increase preprinted price on line items stating "Minimum Bid Price" in the description on the Bid Form by crossing out the minimum and inserting revised price on the line above.

F. Bidder may decrease preprinted price on line items stating "Maximum Bid Price" in the description on the Bid Form by crossing out the maximum and inserting revised price on the line above.

G. Bidder shall insert a price no greater than the maximum preprinted range and no less than the preprinted range for line items stating "Fixed Range Unit Price" in the description on the Bid Form by crossing out prices noted and inserting revised price on the line above.

H. Bidder may not adjust Cash Allowance amounts.

10.0 *BID SUBMISSION*

A. City Secretary will receive Bids on Bid Date at location specified in Document 00210 – Supplementary Instructions to Bidders.

B. Bids submitted after Bid Date will be returned to Bidder unopened.

C. Verbal, facsimile, or electronic Bids are invalid and will not be considered.

D. Bidder shall submit in person or by mail one copy of the signed Document 00410 – Bid Form, Parts A and B, along with required Security Deposit, and required Bid Supplements, in a sealed, opaque envelope. In addition, Bidder shall clearly identify Project, Bid Date and Bidder's name on outside of envelope. If forwarded by mail, the sealed envelope containing the Bid must be enclosed in another envelope addressed for postal delivery.

11.0 *BID SECURITY*

A. Bidder shall submit a Security Deposit with its Bid.

B. Certified Check or Cashier's Check

1. Bidder shall make check payable to the City of Houston.

2. A check is submitted on the condition that if Bidder is named Low Bidder and fails either to timely and properly submit documents required in Document 00495 – Post-Bid Procedures, the City will cash the check in accordance with Paragraph 11.0.E.

C. Bid Bond

1. The bid bond must be a valid and enforceable bond, signed by a surety that complies with other requirements set out by law.

2. The bid bond must name the City of Houston as obligee, and be signed by the Bidder as principal and signed and sealed by the surety.

3. The bid bond must be conditioned such that if Bidder is named Low Bidder and then fails to timely and properly submit documents required in Document 00495 – Post-Bid Procedures, surety will be obligated to pay to the City an amount in accordance with Paragraph 11.0.E.

D. Security Deposits will be retained until after the Contract is awarded or all Bids are rejected.

E. Low Bidder forfeits Security Deposit if it fails to timely and properly submit documents required in Document 00495 – Post-Bid Procedures. The City may claim an amount equal to the difference between the Total Bid

Price of the defaulting Bidder and the Total Bid Price of the Bidder awarded the Contract. If Security Deposit is a check, the City will reimburse any remaining balance to the defaulting Bidder.

12.0 *SUBCONTRACTORS AND SUPPLIERS*

A. The City may reject proposed Subcontractors or Suppliers.

B. Refer to Document 00800 – Supplementary Conditions, for MWBEPDBE, DBE and SBE goals.

13.0 *MODIFICATION OR WITHDRAWAL OF BID*

A. A Bidder may modify or withdraw a Bid submitted before the Bid Date by written notice to the City Secretary. The notice may not reveal the amount of the original Bid and must be signed by the Bidder.

B. Bidder may not modify or withdraw its Bid by verbal, facsimile, or electronic means.

C. A withdrawn Bid may be resubmitted up to the time designated for receipt of Bids.

14.0 *BID DISQUALIFICATION*

A. The City may disqualify a Bid if the Bidder:

1. fails to provide required Security Deposit in the proper amount;

2. improperly or illegibly completes information required by the Bid Documents;

3. fails to sign Bid or improperly signs Bid;

4. qualifies its Bid; or

5. improperly submits its Bid.

B. When requested, Low Bidder shall present satisfactory evidence that Bidder has regularly engaged in performing construction work as proposed, and has the capital, labor, equipment, and material to perform the Work.

15.0 *PREBID MEETING*

A. A prebid meeting is scheduled to be held at the place, time, and date listed in Document 00210 – Supplementary Instructions to Bidders.

B. All Bidders, subcontractors, and suppliers are invited to attend.

C. Representatives of City Engineer will attend.

16.0 *OPENING OF BIDS*

A. Bids are opened by the City Secretary and publicly read in City Council Chambers on the Public Level in City Hall Annex at 11:00 a.m. on Bid Date.

B. Place and date of Bid opening may be changed in accordance with Sections 15-3(b)(5) and 15-3(b)(6) of the City Code.

17.0 *EVALUATION AND CONSIDERATION OF BIDS*

A. Project Manager will tabulate, record and evaluate Bids.

B. The City may reject all Bids or may reject any defective Bid.

18.0 *ACCEPTANCE OF THE BID*

A. The City will send to Low Bidder Document 00498 – Notice of Intent to Award. Acceptance by the City is conditioned upon Bidder's timely and proper submittal of documents required in Document 00495 – Post-Bid Procedures.

B. The Bid remains open to acceptance and is irrevocable for the period of time stated in Document 00410A – Bid Form – Part A.

END OF DOCUMENT

Document 00210

SUPPLEMENTARY INSTRUCTIONS TO BIDDERS

The following Paragraphs modify Document 00200 - Instructions to Bidders. Where a portion of the Instructions to Bidders is modified or deleted by these Supplementary Instructions, the unaltered portions of the Instructions to Bidders remains in effect.

2.0 – DEFINITIONS: Add the following Paragraphs to this Section:

O. *Office of Business Opportunity (OBO):* All references to Affirmative Action Contract Compliance Division (AACC) set forth in Document 00700 – General Conditions and in other documents of the Project Manual, shall refer to, and include, the Office of Business Opportunity.

3.0 - NOTICE TO BIDDERS: Add the following Paragraph to this Section:

C. The City will award this contract to a "Local Business", as that term is defined in Section 15-176 of the City of Houston Code of Ordinances ("the Code"):

- If the bid of the Local Business is less than $100,000 and is the lowest responsible bid or is within 5% of the lowest bid received, or
- If the bid of the Local Business is more than $100,000 and is the lowest responsible bid or is within 3% of the lowest bid received, and
- Unless the Director determines that such an award would unduly interfere with contract needs, as provided in Section 15-181 of the Code.

If there is no bid of a Local Business that meets these criteria, the City will award the contract to the lowest responsible bidder.

4.0 – BID DOCUMENTS: Add the following Paragraphs to this Section:

A. Add the following Paragraph A.1:

1. Bid documents may only be obtained electronically at the City's website: http://bidsets.publicworks.houstontx.gov/.

D. Add the following Paragraph D.1:

1. Copies of the City Standard Specifications and Details may be acquired at no cost on the City's website **http://documents.publicworks.houstontx.gov/document-center/cat_view/88-engineering-and-construction/92-specifications/208-division-02-16-standard-specifications.html**

E. The following plan rooms, whose names, addresses, phone and fax numbers were last updated on April 9, 2007, have been authorized by the City to display Bid Documents for examination:
(Note: The Bid Documents furnished to the plan rooms for examination can be in electronic format, in hard copies, or in any other formats pertaining to each City Contracting Division's discretion.)

1. AMTEK Information Services, Inc., 4001 Sherwood Lane, Houston, TX 77092, 713-956-0100, Fax 713-956-5340, Email: planroom@amtekusa.com

2. Associated General Contractors, (AGC-HHUI), Highway, Heavy Utilities and Industrial Branch, 2400 Augusta St., Suite 180, Houston, TX 77057, 713-334-7100, Fax 713-334-7130. Email: houston@agctx.org (Attention: Mel Keyser)

3. Reed Construction Data, 30 Technology Parkway South, Suite 100, Norcross, GA – 30092-8629. Tel. 1-800-424-3996 or 1-800-699-8640; Fax 1-800-317-0870 or 1-800-508-5370.

4. The Builders' Exchange of Texas, Inc., 3910 Kirby, Suite 131, Houston, TX 77098, 210-564-6900, Fax: 210-564-6921, Email: houston@bxtx.com

F. Add the following Paragraph F.1:

1. Designation as a City Business or Local Business

To be designated as a City or Local Business for the purpose of the Hire Houston First Program, as set out in Article XI of Chapter 15 of the Houston City Code, a bidder or proposer must submit the Hire Houston First Application and Affidavit to the Director of the Mayor's Office of Business Opportunity (OBO) and receive notice that the designation has been approved prior to submission of a bid or proposal. Submit with your bid a valid official letter from OBO with your designation as a City or Local Business.

5.0 - EXAMINATION OF DOCUMENTS, SITE, AND LOCAL CONDITIONS: Insert the following paragraph:

A. Add the following Paragraph D.1:

1. Work will be performed in public right-of-way. The site may be examined at any time during daylight hours.

9.0 – PREPARATION OF BIDS: Add the following Paragraph I to this Paragraph:

I. For math errors the City encounters in analyzing Bids, the following guidance will be used:

In the event of a conflict between:	The Bid Price is:
1. Individual Unit Price and Extension of that Unit Price	Individual Unit Price times Estimated Quantity
2. A Unit Price extension and total of Unit Price Extensions	Sum of all Individual Unit Price Extensions
3. Individual Alternate and total of Alternates	Sum of all Individual Alternates
4. Individual subtotals for Stipulated Price, Base Unit Prices, Extra Unit Prices, Contractor Bonus, Cash Allowances, and Alternates; and the Total Bid Price	Sum of Individual subtotals for Stipulated Price, Base Unit Prices, Extra Unit Prices, Contractor Bonus, Cash Allowances and Alternates

10.0 – BID SUBMISSION: Add the following Paragraph A.1 to this Section:

A. Add the following Paragraph A.1:

1. City Secretary will receive Bids at 900 Bagby, Room P101, Houston, Texas until 10:30 a.m., local time on April 16, 2015.

15.0 – PREBID MEETING: Add the following Paragraph A.1 to this Section:

A. Add the following Paragraph A.1:

1. A Prebid Meeting will be held at 2:00 P.M. on Tuesday, March 31, 2015, in 15th Floor, Conference Room No. 1546 at 611 Walker, Houston, Texas 77002.

END OF DOCUMENT

Document 00220

REQUEST FOR BID INFORMATION

PROJECT: 24-Inch Water Line Along West Bellfort From Buffalo Speedway to Stella Link

PROJECT No.: WBS No. S-000900-0125-4

TO: Anh H. Hunter, P.E.
15th Floor
611 Walker, Houston, Texas 77002

Phone No. (832) 395-2393
Fax No. (832) 395-2333
Email Addr. anh.hunter@Houstontx.gov

(Type or Print question legibly; use back if more space is needed)

This request relates to _____ and/or _____
Drawing / Detail No. Specification Section No.

Attachments to this request: _____

Signature Date

(Type or Print Name)

(Type or Print Company Name)

END OF DOCUMENT

Document 00320

GEOTECHNICAL INFORMATION

1. DOCUMENT INCLUDES

   A. Soils investigation reports.
   B. Bidder's responsibilities.

2. RELATED DOCUMENTS

   A. Document 00340 – Environmental Information
   B. Section 02260 - Trench Safety Systems

3. SITE INVESTIGATION REPORTS

   A. In the design and preparation of Contract documents for this Project, the City and Design Consultant have used information in geotechnical reports for the investigation and analysis of soils and subsurface conditions at the Project site.

   B. An electronic copy of the report for this project is included in a CD-Rom affixed to the inside front cover of the project manual.

   C. Neither the City nor Design Consultant is responsible for accuracy or completeness of any information or data.

4. GEOTECHNICAL REPORTS

   A. Report No.: G148-14 Prepared by (Firm Name): Aviles Engineering Corp; Title: Surface Water Transmission Program Contract 87 – 24-inch Water Line along West Bellfort from Stella Link to Buffalo Speedway; Report Date: December 2014; No. of Pages: 78

5. BIDDER RESPONSIBILITIES

   A. Bidder shall take full responsibility for interpretation and use of information contained in above listed reports for its bidding and construction purposes.

   B. Bidder may perform additional soils investigations as Bidder deems appropriate.

END OF DOCUMENT

Document 00340

ENVIRONMENTAL INFORMATION

1.0 DOCUMENT INCLUDES

A. Environmental Site Assessment, if applicable.

B. Asbestos and Lead Surveys, if applicable.

C. Bidder's responsibilities.

2.0 RELATED DOCUMENTS

A. Document 00320 - Geotechnical Information

3.0 SITE INVESTIGATION REPORTS

A. In the design and preparation of Contract documents for this Project, the City and Design Consultant have used information in environmental site assessment reports for the investigation and analysis of soils and subsurface conditions at the Project site.

B. In the design and preparation of Contract documents for this Project, the City and Design Consultant have relied upon information in surveys taken for Asbestos-containing Materials (ACMs) and lead at the Project site.

C. An electronic copy of each report for this project is included in a CD-Rom affixed to the inside front cover of the project manual.

D. Neither the City nor Design Consultant is responsible for accuracy or completeness of any information or data.

4.0 REPORTS

A. Environmental Assessment Surveys

1. Report No.: HE1414800 Prepared by (Firm Name): HVJ Associates, Inc.; Title: Phase I Environmental Site Assessment-Surface Water Transmission Program-Proposed 24-inch Water Line Along West Bellfort From Stella link to Buffalo Speedway; Report Date: November 21, 2014; No. of Pages: 242

2. Report No.: HE1414801 Prepared by (Firm Name): HVJ Associates, Inc.; Title: Phase II Environmental Site Assessment-Surface Water Transmission Program-Proposed 24-inch Water

Line Along West Bellfort From Stella link to Buffalo Speedway;
Report Date: March 2015; No. of Pages: ____

5.0 BIDDER RESPONSIBILITIES

A. Bidder shall take full responsibility for interpretation and use of information contained in above listed reports for bidding and construction purposes.

B. Bidder may perform additional investigations as Bidder deems appropriate.

END OF DOCUMENT

Document 00410A

BID FORM – PART A

To: **The Honorable Mayor and City Council of the City of Houston**
City Hall Annex
900 Bagby Street
Houston, Texas 77002

Project: 24-Inch Water Line Along West Bellfort From Buffalo Speedway to Stella Link

Project No.: WBS No. S-000900-0125-4

Bidder: _____

(Print or type full name of business entity, such as corporation, LLC, etc)

OFFER

A. Total Bid Price: Having examined the Project location and all matters referred to in Bid Documents for the Project, we, the undersigned, offer to enter into a Contract to perform the Work for the Total Bid Price shown on the signature page of this Document

B. Security Deposit: Included with the Bid is a Security Deposit in the amount of 10 percent of the Total Bid Price subject to terms described in Document 00200 – Instructions to Bidders.

C. Period for Bid Acceptance: This offer is open to acceptance and is irrevocable for 90 days from Bid Date. That period may be extended by mutual written agreement of the City and Bidder.

D. Addenda: All Addenda have been received. Modifications to Bid Documents have been considered and all related costs are included in the Total Bid Price.

E. Bid Supplements: The following documents are attached:

[X] Security Deposit *(as defined in Document 00200 – Instructions to Bidders)*
[X] Document 00450 - Bidder's Statement of MWSBE Status
[X] Document 00452 - Contractor's Submission List - Fair Campaign Ordinance Form A
[X] Document 00453 – Bidder's Statement of Residency *(not required for AIP funded project)*
[X] Document 00454 - Affidavit of Non-interest
[X] Document 00455 - Affidavit of Ownership or Control
[ ] Document 00456 - Bidder's Certificate of Compliance with Buy American Program *(required for AIP funded project)*
[X] Document 00457 – Conflicts of Interest Questionnaire (CIQ)
[ ] Document 00458 - Bidder's Certificate Regarding Foreign Trade Restriction *(required for AIP funded project)*
[ ] Document 00459 - Contractor's Statement Regarding Previous Contracts Subject to EEO *(required for AIP funded project)*
[X] Document 00460 – (POP 1) Pay or Play Acknowledgement Form

[X] Document 00470 – Bidder's MWSBE Participation Plan *(required unless no MWSBE participation goal is provided in Document 00800* (the "Goal")*)*.

[X] Document 00471 – Pre-bid Good Faith Efforts *(required if the goal in Bidder's Participation Plan–Document 00470 is lower than the Goal).*

[X] Document 00472 – Bidder's Goal Deviation Request *(required if the goal in Bidder's Participation Plan–Document 00470 is lower than the Goal).*

[X] Others as listed: Valid official letter from OBO with your designation as a City or Local Business *(Bidder's Participation Hire Houston First)*

CONTRACT TIME

A. If offer is accepted, Contractor shall achieve Date of Substantial Completion within 220 days after Date of Commencement of the Work, subject to adjustments of Contract Time as provided in the Contract.

Document 00410B

BID FORM – PART B

1.0 TOTAL BID PRICE HAS BEEN CALCULATED BY BIDDER, USING THE FOLLOWING COMPONENT PRICES AND PROCESS (PRINT OR TYPE NUMERICAL AMOUNTS):

A. STIPULATED PRICE: $0.00 (N/A)

(Total Bid Price; minus Base Unit Prices, Extra Unit Prices, Cash Allowances and All Alternates, if any)

B. BASE UNIT PRICE TABLE:

Item No.	Spec Ref.	Base Unit Short Title	Unit of Measure	Estimated Quantity	Unit Price (this column controls)	Total in figures
GENERAL						
1	01502	Mobilization	LS	1	$100,000.00(1)	$100,000.00(1)
2	01555	Flagmen	LS	1	$10,000.00(2)	$10,000.00(2)
3	01555	Traffic control and regulation	LS	1	$75,000.00(2)	$75,000.00(2)
4	01555	Install Low Profile Concrete Barriers	LF	520		
5	01555	Relocate Low Profile Concrete Barriers	LF	320		
6	01555	Remove Low Profile Concrete Barriers	LF	520		
7	01562	Tree and plant protection	LS	1	$12,800.00(2)	$12,800.00(2)
8	01570	Filter Fabric Fence	LF	5,480		
9	01570	Inlet Protection Barrier - Gravel Bags	LF	425		
10	01570	Inlet Protection Barrier	LF	65		
11	01575	Stabilized Construction Exit	EA	6		
12	01578	Ground Water control for Open-Cut Construction	LF	4,595	$15.00(2)	$68,925.00 (2)

Item No.	Spec Ref.	Base Unit Short Title	Unit of Measure	Estimated Quantity	Unit Price (this column controls)	Total in figures
13	01740	Remove and Replace Private Chain Link Fence	LF	25		
14	01740	Site Restoration	LF	350		
15	02260	Trench Safety System for Trench Excavation	LF	4,595		
16	02811	4" PVC Sleeves for Landscape Irrigation	LF	690		
17	02915	Plant 1" to 2" tree with 15 gallon container	EA	17		
18	02915	Plant 3" tree with 65 gallon container	EA	11		
19	02921	Hydromulch Seeding	AC	2.03		
20	02922	Sodding	SY	835		
WATER						
21	02082	Service manhole for air valve	EA	5		
22	02082	Service manhole for butterfly valve	EA	4		
23	02082	Extra depth manhole	VF	30		
24	02221	Remove/dispose 6-inch diameter water line	LF	8		
25	02221	Remove/dispose 24-inch diameter water line	LF	5		
26	02221	Remove/dispose 30-inch diameter water line	LF	8		
27	02221	Remove/dispose 24-inch diameter Butterfly Valve with box	EA	1		
28	02221	Remove/dispose 30-inch diameter Butterfly Valve with box	EA	1		
29	02221	Remvoe/dispose 4-inch PVC Sleeves for Landscape Irrigation	LF	690		
30	02511	6-inch diameter water line by open-cut with restrained joints	LF	8		

Item No.	Spec Ref.	Base Unit Short Title	Unit of Measure	Estimated Quantity	Unit Price (this column controls)	Total in figures
31	02511	8-inch diameter water line by trenchless construction	LF	300		
32	02511	8-inch diameter water line by trenchless construction with restrained joints	LF	60		
33	02511	8-inch diameter DIP water line by trenchless construction with restrained joints	LF	55		
34	02511	12-inch diameter DIP water line by open-cut with restrained joints	LF	20		
35	02511	12-inch diameter DIP water line by trenchless construction with restrained joints	LF	80		
36	02511	24-inch diameter water line by open-cut	LF	3,830		
37	02511	24-inch diameter water line by open-cut with restrained joints	LF	780		
38	02511	24-inch diameter water line by trenchless construction with restrained joints	LF	65		
39	02511	24-inch diameter water line in tunnel, with steel casing	LF	321		
40	02511	Remove 8-inch diameter plug	EA	1		
41	02511	Remove 24-inch diameter plug (all types)	EA	1		
42	02511	Remove 30-inch diameter plug (all types)	EA	1		
43	02511	30-inch diameter water line by open-cut with restrained joints	LF	26		
44	02511	8-inch diameter plug and clamp	EA	1		
45	02513	6-inch diameter wet connection	EA	2		
46	02513	8-inch diameter wet connection	EA	1		
47	02513	24-inch diameter wet connection	EA	1		
48	02513	30-inch diameter wet connection	EA	1		
49	02520	Fire hydrant assembly, all depths, including 6-inch diameter gate valve and box	EA	10		

Item No.	Spec Ref.	Base Unit Short Title	Unit of Measure	Estimated Quantity	Unit Price (this column controls)	Total in figures
50	02520	6-inch diameter fire hydrant branch by open-cut with restrained joints	LF	115		
51	02520	6-inch diameter fire hydrant branch by trenchless construction with restrained	LF	175		
52	02520	Remove and salvage existing fire hydrant	EA	1		
53	02522	24-inch diameter Butterfly Valve	EA	3		
54	02522	30-inch diameter Butterfly Valve	EA	1		
55	02524	2-inch diameter combination air valve assembly	EA	5		
56	02525	8-inch by 8-inch diameter tapping sleeves and valve with box	EA	1		
57	02525	12-inch by 12-inch diameter tapping sleeves and valve with box	EA	1		
58	16640	Cathodic protection system	LS	1		
STORM						
59	02221	Remove/dispose storm pipe 24-inch dia	LF	175		
60	02631	24-inch diameter storm sewer by open-cut	LF	175		
PAVING						
61	02086	Adjust existing manhole frame and cover to new grade	EA	1		
62	02221	Removing and disposing of concrete pavement (including all thicknesses, w/ or w/o asphalt, including base & subgrade, w/ or w/o curb, all depths)	SY	3,125		
63	02221	Remove and dispose of concrete sidewalks and driveways, all thicknesses	SY	95		
64	02315	Roadway excavation, including removal of waste disposal	CY	700		

Item No.	Spec Ref.	Base Unit Short Title	Unit of Measure	Estimated Quantity	Unit Price (this column controls)	Total in figures
65	02336	Lime stabilized subgrade, 8-inch thick	SY	3,125		
66	02336	Lime for lime stabilized subgrade (6% lime by dry weight)	TON	46		
67	02751	Reinforced concrete pavement 9-inch thick	SY	1,980		
68	02751	Reinforced concrete pavement 10-inch thick	SY	1,130		
69	02752	Street pavement expansion joint with load transfer	LF	630		
70	02752	Horizontal dowels, 18-inch	EA	1,500		
71	02752	Sidewalk horizontal dowels	EA	72		
72	02752	Saw-cut concrete pavement, driveways and sidewalk (all depths)	LF	4,790		
73	02764	Raised Pav Marker (TY II-C-R)	EA	46		
74	02764	Raised Pav Marker (TY II-B-B)	EA	10		
75	02765	Temporary pavement marking (buttons) 4-inch wide White/ Yellow (SLD/ BRK)	LF	7,750		
76	02765	Temporary pavement marking arrow (Left Turn)	EA	3		
77	02765	Temporary pavement marking (ONLY)	EA	1		
78	02767	Thermoplastic pavement marking 4-inch-wide white/yellow (SLD/BRK)	LF	375		
79	02767	Thermoplastic pavement marking 8-inch-wide White/Yellow	LF	300		
80	02767	Pavement marking (12-inch-wide median nose) Yellow	LF	895		
81	02767	Thermoplastic pavement marking Symbols (TURNING ARROW)	EA	6		
82	02771	6-inch concrete curb (Monolithic)	LF	2,720		

Item No.	Spec Ref.	Base Unit Short Title	Unit of Measure	Estimated Quantity	Unit Price (this column controls)	Total in figures
83	02772	6-inch Concrete median or directional islands	SY	40		
84	02775	Sidewalk 4 1/2-inch thick	SF	860		
85	TxDOT 361	FULL-DEPTH REPAIR CRCP (10")	SY	14		
TOTAL BASE UNIT PRICES						$_____

REST OF PAGE INTENTIONALLY LEFT BLANK

C. EXTRA UNIT PRICE TABLE:

Item No.	Spec Ref.	Extra Unit Short Title	Unit of Measure	Estimated Quantity	Unit Price (this column controls)	Total in figures
86	02317	6" over excavate trench bottom	LF	750	$4.00 (2)	$3,000.00 (2)
87	02318	Excavation around obstructions	CY	250	$30.00 (2)	$7,500.00 (2)
88	02318	Extra hand excavation	CY	250	$15.00 (2)	$3,750.00 (2)
89	02318	Extra machine excavation	CY	250	$20.00 (2)	$5,000.00 (2)
90	02318	Extra placement of backfill material	CY	500	$6.00 (2)	$3,000.00 (2)
91	02502	Extra 24-inch diameter steel Pipe angle adapters	EA	2	$2,000.00 (2)	$4,000.00 (2)
92	02502	Extra steel pipe compact fittings in place	TON	1	$2,000.00 (2)	$2,000.00 (2)
93	02511	Extra 24-inch water fittings in place	EA	2	$2,000.00 (2)	$4,000.00 (2)
TOTAL EXTRA UNIT PRICES						$32,250.00 (2)

D. **CASH ALLOWANCE TABLE:**

Item No.	Spec Ref.	Cash Allowance Short Title	Cash Allowance in figures (1)
94	01110	Street cut permit fee	$2,500.00
TOTAL CASH ALLOWANCES			$2,500.00

REST OF PAGE INTENTIONALLY LEFT BLANK

E. ALTERNATES TABLE:

Item No.	Spec Ref.	Alternate Short Title	Unit of Measure	Estimated Quantity	Unit Price (this column controls)	Total Price for Alternate in figures
N/A		N/A				$0.00
TOTAL ALTERNATES						$0.00

REST OF PAGE INTENTIONALLY LEFT BLANK

F. TOTAL BID PRICE: $_____
(Add Totals for Items A., B., C., D., and E. above)

2.0 SIGNATURES: By signing this Document, I agree that I have received and reviewed all Addenda and considered all costs associated with the Addenda in calculating the Total Bid Price.

Bidder: _____
(Print or type full name of your proprietorship, partnership, corporation, or joint venture.*)

**By: _____
Signature Date

Name: _____
(Print or type name) Title

Address: _____
(Mailing)

_____
(Street, if different)

Telephone and Fax Number: _____
(Print or type numbers)

* If Bid is a joint venture, add additional Bid Form signature sheets for each member of the joint venture.

** Bidder certifies that the only person or parties interested in this offer as principals are those named above. Bidder has not directly or indirectly entered into any agreement, participated in any collusion, or otherwise taken any action in restraint of free competitive bidding.

Note: This document constitutes a government record, as defined by § 37.01 of the Texas Penal Code. Submission of a false government record is punishable as provided in § 37.10 of the Texas Penal Code.

Footnotes for Tables B through E:
(1) Fixed Unit Price determined prior to Bid. Cannot be adjusted by the Bidder.
(2) Minimum Bid Price determined prior to Bid. Can be increased by the Bidder by crossing out the Minimum and noting revised price on the line above.
(3) Maximum Bid Price determined prior to Bid. Can be decreased but not increased by Bidder by crossing out the Maximum and noting revised price on the line above. A Bid that increases the Maximum Bid Price may be found non-conforming and non-responsive.
(4) Fixed Range Bid Price determined prior to Bid. Unit Price can be adjusted by Bidder to any amount within the range defined by crossing out prices noted and noting revised price on the line above.

END OF DOCUMENT

Document 00430

BIDDER'S BOND

THAT WE, _____, as Principal,
(Bidder)
("Bidder"), and the other subscriber hereto, _____, as Surety, do hereby acknowledge ourselves to be held and firmly bound to the City of Houston, a municipal corporation, in the sum of _____ Dollars ($_____) (an amount equal to 10 percent of the Total Bid Price, including Cash Allowances and Alternates, if any, for the payment of which sum, well and truly to be made to the City of Houston and its successors, the Bidder and Surety do bind themselves, their heirs, executors, administrators, successors, and assigns, jointly and severally.

THE CONDITIONS OF THIS OBLIGATION ARE SUCH THAT:

WHEREAS, the Bidder has submitted on or about this day a proposal offering to perform the following:

_____
(Project Name, Location and Number)
in accordance with the Drawings, Specifications, and terms and conditions related thereto to which reference is hereby made.

NOW, THEREFORE, if the Bidder's offer as stated in the Document 00410 – Bid Form is accepted by the City, and the Bidder executes and returns to the City Document 00520 – Agreement, required by the City, on the forms prepared by the City, for the Work and also executes and returns the same number of the Performance, Payment and Maintenance Bonds (such bonds to be executed by a Corporate Surety authorized by the State Board of Insurance to conduct insurance business in the State of Texas, and having an underwriting limitation in at least the amount of the bond) and other submittals as required by Document 00495 - Post-Bid Procedures, in connection with the Work, within the Contract Time, then this obligation shall become null and void; otherwise it is to remain in full force and effect.

If Bidder is unable to or fails to perform the obligations undertaken herein, the undersigned Bidder and Surety shall be liable to the City for the full amount of this obligation which is hereby acknowledged as the amount of damages which will be suffered by the City on account of the failure of such Bidder to perform such obligations, the actual amount of such damages being difficult to ascertain.

Notices required or permitted hereunder shall be in writing and shall be deemed delivered when actually received or, if earlier, on the third day following deposit in a United States Postal Service post office or receptacle, with proper postage affixed (certified mail, return receipt requested), addressed to the respective other Party at the address prescribed in the Contract documents, or at such other address as the receiving Party may hereafter prescribe by written notice to the sending Party.

IN WITNESS THEREOF, the Bidder and Surety have signed and sealed this instrument on the respective dates written below their signatures and have attached current Power of Attorney.

ATTEST, SEAL: (if a corporation)
WITNESS: (if not a corporation)

By: _____
Name:
Title:

ATTEST/SURETY WITNESS: (SEAL)

By: _____
Name:
Title:
Date:

_____
(Name of Bidder)

By: _____
Name:
Title:
Date:

_____
(Full Name of Surety)

_____
(Address of Surety for Notice)

_____

_____
(Telephone Number of Surety)

By: _____
Name:
Title:
Date:

END OF DOCUMENT

Document 00450

BIDDER'S STATEMENT OF MWBE/PDBE/DBE/SBE STATUS

This certifies that the status of the Bidder, _____, in
(Bidder's Name)
regard to the City of Houston Code of Ordinances, Chapter 15, Article V, relating to City-wide percentage goals for contracting with Minority and Women-owned Business Enterprises (MWBE) and Disadvantaged Business Enterprises (DBE), Chapter 15, Article VI, relating to City-wide percentage goals for contracting with Persons with Disabilities Business Enterprises (PDBE) and Chapter 15, Article IX, relating to City-wide percentage goals for contracting with a Small Business Enterprise (SBE) is as follows:

1. Bidder (individual, partnership, corporation) is [__] is not [__] a Minority Business Enterprise as certified by the Office of Business Opportunity.

2. Bidder (individual, partnership, corporation) is [__] is not [__] a Women-owned Business Enterprise as certified by the Office of Business Opportunity

3. Bidder (individual, partnership, corporation) does [__] does not [__] declare itself to be a Persons with Disabilities Business Enterprise as defined above.

4. Bidder (individual, partnership, corporation) does [__] does not [__] declare itself to be a Disadvantaged Business Enterprise as defined above.

5. Bidder (individual, partnership, corporation) does [__] does not [__] declare itself to be a Small Business Enterprise as defined above.

Signature: _____

Title: _____

Date: _____

END OF DOCUMENT

Document 00452
Form A
CONTRACTOR SUBMISSION LIST
CITY OF HOUSTON FAIR CAMPAIGN ORDINANCE

The City of Houston Fair Campaign Ordinance makes it unlawful for a Contractor to offer any contribution to a candidate for City elective office (including elected officers-elect) during a certain period of time prior to and following the award of the Contract by the City Council. The term "Contractor" includes proprietors of proprietorships, partners or joint venturers having an equity interest of 10 percent or more for the partnership or joint venture, and officers, directors and holders of 10 percent or more of the outstanding shares of corporations. Submission of a statement disclosing the names and business addresses of each of those persons is required with each Bid/Proposal for a City Contract. See Chapter 18 of the City of Houston Code of Ordinances for further information.

This list is submitted under the provisions of Section 18-36(b) of the City of Houston Code of Ordinances in connection with the attached Bid/Proposal of:

Firm or Company Name: _____
Firm or Company Address: _____
_____

The firm/company is organized as indicated below. Check one as applicable and attach additional pages if needed to supply the required names and addresses.

[ ] SOLE PROPRIETOR

Name _____ _____
Proprietor Address

[ ] A PARTNERSHIP

LIST EACH PARTNER HAVING EQUITY INTEREST OF 10% OR MORE OF PARTNERSHIP (IF NONE STATE "NONE")

Name _____ _____
Partner Address

Name _____ _____
Partner Address

[ ] A CORPORATION

LIST ALL DIRECTORS OF THE CORPORATION (IF NONE STATE "NONE")

Name _____ _____
Director Address

Name _____ _____
Director Address

Name _____ _____
Director Address

LIST ALL OFFICERS OF THE CORPORATION (IF NONE STATE "NONE")

Name _____ _____
Officer Address

Name _____ _____
Officer Address

Name _____ _____
Officer Address

LIST ALL INDIVIDUALS OWNING 10% OR MORE OF OUTSTANDING SHARES OF STOCK OF THE CORPORATION (IF NONE STATE "NONE")

Name _____ _____
Owner Address

Name _____ _____
Owner Address

Name _____ _____
Owner Address

I certify that I am duly authorized to submit this list on behalf of the firm, that I am associated with the firm in the capacity noted below, and that I have knowledge of the accuracy of the information provided herein.

_____
Signature

_____
Printed Name

_____
Title

Note: This list constitutes a government record as defined by § 37.01 of the Texas Penal Code.

END OF DOCUMENT

Document 00453

BIDDER'S STATEMENT OF RESIDENCY

The City may not award a contract for general construction, services, or purchases to a Nonresident Bidder unless Nonresident's Bid is lower than the lowest Bid submitted by a responsible Texas Resident Bidder by the same amount that a Texas Resident bidder would be required to underbid the Nonresident Bidder to obtain a comparable contract in the state in which Nonresident's principle place of business is located.

1. This certifies that the Bidder, _____, is a State of Texas Resident Bidder as defined in TEX. GOVT. CODE ANN. § 2252.001(4) (Vernon 1994).

   _____ _____
   Signature Title

   "Texas Resident Bidder" means a bidder whose principal place of business is in this State, and includes a Contractor whose ultimate parent company or majority owner has its principal place of business in this State. *When bidder cannot sign 1, above, proceed to 2.*

2. a. _____ is a resident of _____ and is a Nonresident Bidder as defined in TEX. GOVT. CODE ANN. § 2252.001(3) (Vernon 1994).

   _____ _____
   Signature Title

   "Nonresident Bidder" means a bidder whose principal place of business is not in this State, but excludes a contractor whose ultimate parent company or majority owner has its principal place of business in this State.

   b. The State of _____ _____ have a state statute giving
   Bidder's resident state Does or Does Not
   preference to resident bidders.

   _____ _____
   Signature Title

   If the answer to 2.b is that your state does have a statute giving preference to resident bidders, then you must provide a copy and proceed to 3.

3. A copy of the State of _____ statute is attached.

   _____ _____
   Signature Title

   _____
   Date

END OF DOCUMENT

Document 00454

AFFIDAVIT OF NON-INTEREST

BEFORE ME, the undersigned authority, a Notary Public in and for the State of Texas, on this day personally appeared _____, who
Affiant

being by me duly sworn on his oath stated that he is _____, of
Title

_____,
Name of Firm

the firm named and referred to and in the foregoing; and that he knows of no officer, agent, or employee of the City of Houston being in any manner interested either directly or indirectly in such Contract.

_____
Affiant's Signature

SWORN AND SUBSCRIBED before me on _____.
Date

_____
Notary Public in and for the State of TEXAS

_____
Print or type name

My Commission Expires: _____
Expiration Date

END OF DOCUMENT

Document 00455

AFFIDAVIT OF OWNERSHIP OR CONTROL

ORIG. DEPT.: DEPARTMENT OF PUBLIC WORKS AND ENGINEERING **FILE/I.D. NO.:** S-000900-0125-4

INSTRUCTION: ENTITIES USING AN ASSUMED NAME SHOULD DISCLOSE SUCH FACT TO AVOID REJECTION OF THE AFFIDAVIT. THE FOLLOWING FORMAT IS RECOMMENDED: CORPORATE/LEGAL NAME DBA ASSUMED NAME.

STATE OF _____ §
§ **AFFIDAVIT OF OWNERSHIP OR CONTROL**
COUNTY OF _____ §

BEFORE ME, the undersigned authority, on this day personally appeared _____ [***FULL NAME***] (hereafter "Affiant"), _____ [***STATE TITLE/CAPACITY WITH CONTRACTING ENTITY***] of _____ [***CONTRACTING ENTITY'S CORPORATE/LEGAL NAME***] ("Contracting Entity"), who being by me duly sworn on oath stated as follows:

1. Affiant is authorized to give this affidavit and has personal knowledge of the facts and matters herein stated.

2. Contracting Entity seeks to do business with the City in connection with _____ [***DESCRIBE PROJECT OR MATTER***] which is expected to be in an amount that exceeds $50,000.

3. The following information is submitted in connection with the proposal, submission or bid of Contracting Entity in connection with the above described project or matter.

4. Contracting Entity is organized as a business entity as noted below (check box as applicable).

FOR PROFIT ENTITY:

[ ] SOLE PROPRIETORSHIP
[ ] CORPORATION
[ ] PARTNERSHIP
[ ] LIMITED PARTNERSHIP
[ ] JOINT VENTURE
[ ] LIMITED LIABILITY COMPANY
[ ] OTHER (Specify type in space below)

NON-PROFIT ENTITY:

[ ] NON-PROFIT CORPORATION
[ ] UNINCORPORATED ASSOCIATION

_____

_____

_____

5. The information shown below is true and correct for the Contracting Entity and all owners of 5% or more of the Contracting Entity and, where the Contracting Entity is a non-profit entity, the required information has been shown for each officer, *i.e.*, president, vice-president, secretary, treasurer, etc. ***[NOTE: IN ALL CASES, USE FULL NAMES, LOCAL BUSINESS AND RESIDENCE ADDRESSES AND TELEPHONE NUMBERS. DO NOT USE POST OFFICE BOXES FOR ANY ADDRESS. INCLUSION OF E-MAIL ADDRESSES IS OPTIONAL, BUT RECOMMENDED. ATTACH ADDITIONAL SHEETS AS NEEDED.]***

Contracting Entity

Name: _____

Business Address *[NO./STREET]* _____

[CITY/STATE/ZIP CODE] _____

Telephone Number (_____)_____

Email Address *[OPTIONAL]* _____

Residence Address *[NO./STREET]* _____

[CITY/STATE/ZIP CODE] _____

Telephone Number (_____)_____

Email Address *[OPTIONAL]* _____

5% Owner(s) or More (IF NONE, STATE "NONE.")

Name: _____

Business Address *[NO./STREET]* _____

[CITY/STATE/ZIP CODE] _____

Telephone Number (_____)_____

Email Address *[OPTIONAL]* _____

Residence Address *[NO./STREET]* _____
[CITY/STATE/ZIP CODE] _____

Telephone Number (_____)_____

Email Address *[OPTIONAL]* _____

6. ***Optional Information***

Contracting Entity and/or _____ [***NAME OF OWNER OR NON-PROFIT OFFICER***] is actively protesting, challenging or appealing the accuracy and/or amount of taxes levied against _____ [***CONTRACTING ENTITY, OWNER OR NON-PROFIT OFFICER***] as follows:

Name of Debtor: _____

Tax Account Nos. _____

Case or File Nos. _____

Attorney/Agent Name _____

Attorney/Agent Phone No. (_____)_____

Tax Years _____

Status of Appeal ***[DESCRIBE]*** _____

_____

_____

_____

Affiant certifies that he or she is duly authorized to submit the above information on behalf of the Contracting Entity, that Affiant is associated with the Contracting Entity in the capacity noted above and has personal knowledge of the accuracy of the information provided herein, and that the information provided herein is true and correct to the best of Affiant's knowledge and belief.

_____
Affiant

SWORN TO AND SUBSCRIBED before me this _____ day of _____, 20_____.

(Seal)

_____
Notary Public

NOTE:
This affidavit constitutes a **government record** as defined by Section 37.01 of the Texas Penal Code. Submission of a false government record is punishable as provided in Section 37.10 of the Texas Penal Code. Attach additional pages if needed to supply the required names and addresses.

Document 00457

Conflict of Interest Questionnaire

****

Print out latest version of CIQ form from website listed below:

****

Local Government Code Chapter 176 requires Bidders with the City of Houston ("City") to file a Conflict of Interest Questionnaire with the City Secretary of the City of Houston.

The Conflict of Interest Questionnaire is available for downloading on the Texas Ethics Commission's website at: http://www.ethics.state.tx.us/forms/CIQ.pdf. The completed Conflict of Interest Questionnaire will be posted on the City Secretary's website. Also you will find a list of the City Local Government Officers on the City Secretary's website.

For your convenience the CIQ form is attached as part of this document. Although the City has provided this document for the Bidders convenience, it is the Bidders responsibility to submit the latest version of the CIQ form as promulgated by the Texas Ethics Commission.

The Failure of any Bidder to comply with this law is a Class C misdemeanor.

END OF DOCUMENT

Document 00459

CONTRACTOR'S STATEMENT REGARDING PREVIOUS CONTRACTS SUBJECT TO EQUAL EMPLOYMENT OPPORTUNITY

Section 60-1.7(b) of the Regulations of the Secretary of Labor requires each bidder or prospective prime contractor and proposed subcontractor, where appropriate, to state in the bid or at the outset of negotiations for the contract whether it has participated in any previous contract or subcontract subject to the equal opportunity clause; and if so, whether it has filed with the Joint Reporting Committee, the Director, an agency, or the former President's Committee on Equal Employment Opportunity all reports due under the applicable filing requirements. In any case in which a bidder or prospective prime contractor or proposed subcontractor which participated in a previous contract subject to Executive Order 10925, 11114. or 11246 has not filed a report due under the applicable filing documents, no contract or subcontract shall be awarded unless such contractor submits a report covering the delinquent period or such other period specified by the FAA or the Director, OFCCP.

Contractor has __ has not __ participated in a previous contract subject to the equal opportunity clause prescribed by Executive Order 10925, or Executive Order 11114, or Executive Order 11246.

Contractor has __ has not __ submitted all compliance reports in connection with any such contract due under the applicable filing requirements; and that representations indicating submission of required compliance reports signed by proposed subcontractors will be obtained prior to award of subcontracts.

If Contractor has participated in a previous contract subject to the equal opportunity clause and has not submitted compliance reports due under applicable filing requirements, Contractor (Proposer) shall submit a compliance report on Standard Form 100, "Employee Information Report EEO-1" prior to the award of the Contract.

Standard Form 100 is normally furnished to contractors annually, based on a mailing list currently maintained by the Joint Reporting Committee. In the event Contractor has not received the form, Contractor may obtain it by writing to the following address:

Joint Reporting Committee
1800 G Street
Washington, DC 20506

_____
(Printed or typed Name of Signatory)

_____ _____
Signature Date

_____
Title

_____
Contractor's Firm Name

NOTE: The penalty for making false statements in offers is prescribed in 18 U.S.C. 1001.

END OF DOCUMENT

Document 00460
(POP -1)
City of Houston
Pay or Play Program
Acknowledgement Form

It has been determined that the project currently open for bidding meets the criteria of the City of Houston Pay or Play program. This form acknowledges your awareness of the Pay or Play program which is authorized by Ordinance 2007-534. Your signature below affirms that you will comply with the requirements of the program if you are the successful bidder/proposer, and ensure the same on behalf of subcontracts subject to the Pay or Play Program.

I declare under penalty of perjury under the laws of the State of Texas that if awarded this contract which meets the criteria for the City of Houston's Pay or Play Program, I will comply with all requirements of the Pay or Play Program in accordance with Executive Order 1-7.

***Fill out all information below and submit this form with your bid/proposal packet.**

_____
Solicitation Number

_____ _____
Signature Date

_____ _____
Print Name City Vendor ID

_____ _____
Company Name Phone Number

_____
Email Address

Note: For more information contact your POP Liaison or the POP Contract Administrator. All contact information can be found on www.houstontx.gov →Departments→Office of Business Opportunity→Pay or Play.

Document 00470

BIDDER'S MWSBE PARTICIPATION PLAN

The Bidder or Proposer shall submit this completed form with the bid, to demonstrate the Bidder/Proposer's plan to meet the contract-specific MWSBE goal ("contract goal"). If the Bidder or Proposer cannot meet the contract goal, the Bidder/Proposer has the burden to demonstrate "Good Faith Efforts", which shall include correctly and accurately preparing and submitting this form, a Record of Good Faith Efforts (Document 00471), and a Request for Deviation from the Goal (Document 00472), the documentation evidencing their "Good Faith Efforts", as required by the City of Houston's Good Faith Efforts Policy (Document 00808). The City will review the Participation Plan and Good Faith Efforts at the time of bid opening. Visit http://www.houstontx.gov/obo for more information.

Contract Goal	MBEGoal %	WBEGoal %
	12%	7%

Bidder's Participation Plan Percentage	SBE	MBE	WBE	Total

NAICS Code (6 digit)	Description of Work (Plan Sheet #, Unit Price #, Scope of Work #, as applicable)	% of Total Bid Price (2 decimal places)	Cert. Type for Goal MBE, WBE, SBE)	Certified Firm Name Firm Address Contact Name Phone No. and E-Mail (if available)

Signature for Company: _____ Date: _____
Print Name: _____ Phone: _____
Bidder: _____
(Print or type full name of business entity, such as corporation, LLC, etc)
I understand that supplying inaccurate information may violate Texas Penal Code Section 37.10 and lead to City sanctions.

DOCUMENT 00470

CONTINUATION PAGE

NAICS Code (6 digit)	Description of Work (Plan Sheet #, Unit Price #, Scope of Work #, as applicable)	% of Total Bid Price (2 decimal places)	Cert. Type for Goal MBE, WBE, SBE)	Certified Firm Name Firm Address Contact Name Phone No. and E-Mail (if available)

Signature for Company: _____ Date: _____
Print Name: _____ Phone: _____
Bidder: _____
(Print or type full name of business entity, such as corporation, LLC, etc)

*I understand that supplying inaccurate information may violate Texas Penal Code Section 37.10 and lead to City sanctions.

Document 00471

PRE-BID GOOD FAITH EFFORTS

Bidder or Proposer Name: _____ Project Name_____

A Bidder or Proposer that may be unable to complete or follow a Participation Plan (Document CCD-00470) to meet the Contract Goal in the Supplemental Conditions (Document 00800), must submit this completed form as well as a Goal Deviation Request Form (Document 00472), and any other documentation of "Good Faith Efforts" with the bid (see Document 00808). The Bidder or Prime Contractor has the burden to demonstrate "Good Faith Efforts" to meet the MWSBE goal, which includes correctly and accurately preparing and submitting this form and other efforts described in the City's Good Faith Efforts Policy (Document 00808). The Office of Business Opportunity will review Good Faith Efforts and Participation Plan after selection of an apparent low bidder.

UNLESS THE BIDDER'S/PROPOSER'S PARTICIPATION PLAN MEETS THE CONTRACT GOAL, FAILURE TO SUBMIT THIS FORM MAY RESULT IN THE BID BEING FOUND NON-RESPONSIVE.

NAICS Code	Plan Item No.	MWSBE Type for Goal	Certified Firm Name Address, Phone No. and E-Mail	Certified Firm Contact Person	Method of Contact	Prime Contact Date	Certified Firm Response	Results of Contact (why suitable or not suitable for work)
					Phone ☐ E-mail ☐ Fax ☐			
					Phone ☐ E-mail ☐ Fax ☐			
					Phone ☐ E-mail ☐ Fax ☐			
					Phone ☐ E-mail ☐ Fax ☐			

Authorized Signature: _____ Date: _____ Phone: _____

Print Name: _____ Email Address: _____

CONTINUATION PAGE

NAICS Code	Plan Item No.	MWSBE Type for Goal	Certified Firm Name Address, Phone No. and E-Mail	Certified Firm Contact Person	Method of Contact	Prime Contact Date	Certified Firm Response	Results of Contact (why suitable or not suitable for work)
					Phone ☐ E-mail ☐ Fax ☐			
					Phone ☐ E-mail ☐ Fax ☐			
					Phone ☐ E-mail ☐ Fax ☐			
					Phone ☐ E-mail ☐ Fax ☐			
					Phone ☐ E-mail ☐ Fax ☐			
					Phone ☐ E-mail ☐ Fax ☐			
					Phone ☐ E-mail ☐ Fax ☐			

Authorized Signature: _____ Date: _____ Phone: _____

Print Name: _____ Email Address: _____

Document 00472

BIDDER'S MWSBE GOAL DEVIATION REQUEST

Bidder or Proposer Name:_____

Project Name & Bid/Contract #:_____

	MBE	WBE	SBE	Total
Department Approved MWSBE Goals	%	%	%	%

	MBE	WBE	SBE	Total
Bidder's Proposed MWSBE Goals	%	%	%	%

Justification: Please provide the reason the Bidder is unable to meet the Contract Goal in Form 00800.

_____

_____

_____

Good Faith Efforts: Please list any efforts not listed in the Bidder's Good Faith Effort Report (Form 00471).

_____

_____

_____

_____

Date: _____ Bidder: _____

Email:_____ By: _____

Phone Number: _____ Title: _____

FOR OFFICIAL USE ONLY: Approved ☐ Not Approved ☐

OBO Representative Date:_____

_____ Title: _____

Document 00495

POST-BID PROCEDURES

1.0 DOCUMENT ADDRESSES

A. Notice of Intent to Award

B. Monitoring Authority/Contracting Department

C. Requirements of Bidder

D. Failure of Bidder to comply with requirements

E. Notice to Proceed

2.0 NOTICE OF INTENT TO AWARD

A. The City will provide written Notice of Intent to Award to Low Bidder.

3.0 DEFINITIONS

A. The "Monitoring Authority" or "OBO" for this Project is:

Director, Office of Business Opportunity Division
City of Houston
611 Walker Street, 7th Floor
Houston, Texas 77002

B. The "Contracting Department" for this Project is:
Director, Department of DEPARTMENT OF PUBLIC WORKS AND ENGINEERING
City of Houston
611 Walker Street
Houston, Texas 77002
ATTN: **Anh H. Hunter, P.E.**,

4.0 REQUIREMENTS OF BIDDER

A. Within10 days of receipt of Notice of Intent to Award, Low Bidder shall execute and deliver to Anh H. Hunter, P.E., Project Manager and Monitoring Authority, for the City's approval, documents indicated by an "X" below:
[ ] Document 00570 – Revised MWSBE Participation Plan *(Do not submit if OBO Director approved Bidder's Plan – Document 00470)*

[X] Executed Subcontract(s), Letter(s) of Intent, or documentation of good faith efforts to meet the MWSBE goals

B. Within 10 days of receipt of Notice of Intent to Award, Low Bidder shall execute and deliver to Anh H. Hunter, P.E., Project Manager for the City's approval, documents indicated by an "X" below:

[ ] Document 00500 - Form of Business
[X] Document 00501 - Resolution of Contractor
[X] Document 00520 - Agreement
[X] Document 00600 - List of Proposed Subcontractors and Suppliers
[X] Document 00601 - Drug Policy Compliance Agreement
[X] Document 00602 - Contractor's Drug-free Workplace Policy *(Contractor creates this document.)*
[X] Document 00604 - History of OSHA Actions and List of On-the-job Injuries
[X] Document 00605 - List of Safety Impact Positions *(Contractor completes this list. Do not submit if submitting Document 00606.)*
[ ] Document 00606 - Contractor's Certification of No Safety Impact Positions *(Do not submit if submitting Document 00605.)*
[ ] Document 00607 - Certification Regarding Debarment, Suspension, and Other Responsibility Matters
[ ] Document 00608 - Contractor's Certification Regarding Non-segregated Facilities for Project Funded by AIP Grant
[X] Document 00610 - Performance Bond
[X] Document 00611 - Statutory Payment Bond
[X] Document 00612 - One-year Maintenance Bond
[X] Document 00613 - One-year Surface Correction Bond
[X] Document 00620 - Affidavit of Insurance *(with Certificate of Insurance attached)*
[X] Document 00622 - Name and Qualifications of Proposed Superintendent *(Contractor creates this document.)*
[ ] Document 00623 - Contractor's Act of Assurance (SRF Form ED-103)
[X] Document 00624 - Affidavit of Compliance with S/WMBE Program
[ ] Document 00625 - SRF Participation Summary
[ ] Document 00626 - SRF Affirmative Steps Solicitation Report
[ ] Document 00627 - SRF Prime Contractor Affirmative Steps Certification and Goals
[ ] Document 00629 - Affidavit for FAA Form 7460-1
[X] Document 00630 - Certification of Compliance with Pay or Play Program
[X] Document 00631 - City of Houston Pay or Play Program – List of Subcontractors
[ ] Document 00809 – CDBG Requirements for Federally Funded Projects

C. Within 10 days of receipt of Notice of Intent to Award, Low Bidder shall execute the following forms and deliver them directly to the Monitoring Authority.

1. Original forms contained in Document 00805 – Equal Employment Opportunity Program Requirements:
   [X] Pages 00805-3 to 00805-5, Certification by Bidder Regarding Equal

Employment Opportunity

[X] Page 00805-6, Total Work Force Composition of the Company, or copy of latest EEO-1 form (required only if Contractor has a work force of 50 or more people and the Original Contract Price is $50,000 or more)

[X] Page 00805-7, Equal Employment Opportunity Compliance Program

[X] Page 00805-26, Certification by Proposed Subcontractor Regarding Equal Employment Opportunity

[X] Page 00805-29, Certification by Proposed Material Supplier, Lessor, and Professional Service Providers Regarding Equal Employment Opportunity

2. Original completed form Document 00633 - Certification by Proposed Material Suppliers, Lessors, and Professional Service Providers Regarding Equal Employment Opportunity, for each proposed material supplier and equipment supplier.

3. Original forms contained in Document 00820 – Wage Scale for Engineering Construction.

[X] *Certificate from Contractor Appointing Officer or Employee to Supervise Payment of Employees*

[ ] *Certificate from SubContractor Appointing Officer or Employee to Supervise Payment of Employees*

[ ] Document 00812, Exhibit "A" – Certificate from Contractor Appointing Officer or Employee to Supervise Payment of Employees

D. Designations of Subcontractors and Suppliers, who have been selected by Bidder in Document 00600 - List of Proposed Subcontractors and Suppliers, and accepted by the City, may be changed only with prior notice and acceptance by Project Manager as provided in Conditions of the Contract. For each Product Supplier subsequently added or substituted, provide an original completed form, Document 00633 - Certification by Proposed Material Suppliers, Lessors, and Professional Service Providers Regarding Equal Employment Opportunity, directly to the Monitoring Authority.

E. On Bidder's written request, Anh H. Hunter, P.E., Project Manager may grant an extension of time, not to exceed 5 days, to furnish documents specified in Paragraphs 4.0.A and 4.0.B. If Bidder is required to resubmit documents specified in Paragraph 4.0.A or 4.0.B, Bidder shall do so within time limits provided in the request for resubmission.

F. Designations of Subcontractors and Suppliers, who have been selected by Bidder in its Participation Plan, and accepted by the City, may be changed only with prior notice and acceptance by the Monitoring Authority as provided in Document 00808 – Bidder/Contractor Requirements for the City of Houston Minority, Women, and Small Business Enterprise (MWSBE), and Persons with Disabilities Business Enterprise (PDBE).

5.0 FAILURE OF BIDDER TO COMPLY WITH REQUIREMENTS

A. Should Bidder, on receipt of Notice of Intent to Award, fail to comply with requirements of this Document 00495 within stated time, the City may declare award in default and require forfeiture of the Security Deposit.

B. After the City's written notice of default to Low Bidder, the City may award the Contract to Bidder whose offer is the next lowest bid, and Security Deposit of Bidder in default shall be forfeited to the City in accordance with provisions of Document 00200 - Instructions to Bidders.

6.0 NOTICE TO PROCEED

A. Upon the City's execution of the Agreement and delivery to Contractor, City Engineer will give Document 00551 - Notice to Proceed to Contractor, which establishes Date of Commencement of the Work.

END OF DOCUMENT

Document 00500

FORM OF BUSINESS

Please mark the box describing your firm's form of business, fill in the requested information, and include the relevant attachments.

[ ] Corporation
Corporate Name: _____
State of Incorporation: _____
Mailing Address: _____, _____
Type of Corporation: _____

Certificate of Assumed Name, if operating under a name different than that on the corporate charter (the Certificate must have been issued within the past 10 years to be valid)

*Certificate of Good Standing

*Certificate of Existence (if non-Texas corporation, Certificate of Authority)

[ ] Partnership/Joint Venture
Partnership/Joint Venture Name: _____
Mailing Address: _____, _____
Type of Partnership/Joint Venture: _____

Copy of the Partnership or Joint Venture Agreement, **or**
Affidavit with the name of the partnership or joint venture, the names of the individual partners or participants in the joint venture, and a statement that the partnership or joint venture is in existence

Certificate of Assumed Name, (the Certificate must have been issued within the past 10 years to be valid)

If firm is a limited partnership, the Certificate of Limited Partnership

If any partner or joint venturer is a corporation, the above information relating to corporation must be included as to each sum partner or joint venturer.

[ ] Sole Proprietorship

Name: _____
Mailing Address: _____

Certificate of Assumed Name, if operating under a name different than that of the sole proprietor (the Certificate must have been issued within the past 10 years to be valid)

** Must be furnished upon request of the Director and must be less than 90 days old*.

END OF DOCUMENT

****

Instructions:

Contractor must execute and deliver to the Project Manager a Resolution of Contractor for each individual authorized to sign Contract Documents related to this Contract. Contractor may rescind Resolutions of Contractor through a written document in similar form.

****

Document 00501

RESOLUTION OF CONTRACTOR

_____ ("Contractor"),
(Name of Contractor, e.g., "Biz. Inc.", "Biz LLP")

is a _____,
(Type of Organization, e.g.: Corporation, Limited Partnership, Limited Liability Partnership, Limited Liability Company, etc.)

which is bound by acts of _____,
(Name and Form of Governing Entity, e.g., "Biz Inc. Board of Directors", "Bill Smith, GP", etc.)

("Governing Entity").

On the _____ day of _____, 20__, the Governing Entity resolved, in accordance with all documents, rules, and laws applicable to the Contractor, that _____, is authorized to act as the
(Contractor's Representative)

Contractor's Representative in all business transactions (initial one) ____ conducted in the State of Texas OR ____ related to this Contract; and

The Governing Entity warrants that the above resolution (a) was entered into without dissent or reservation by the Governing Entity, (b) has not been rescinded or amended, and (c) is now in full force and effect; and

In authentication of the adoption of this resolution, I subscribe my name on this day of _____, 20___.

_____ _____
(Authorized Signature for Governing Entity) (Print or Type Name and Title of Authorized Signatory)

SWORN AND SUBSCRIBED before me on _____
Date

_____
Notary Public in and for the State of Texas

My Commission Expires: _____ _____
Expiration Date Print or Type Name of Notary Public

Document 00520

AGREEMENT

Project: 24-Inch Water Line Along West Bellfort From Buffalo Speedway to Stella Link

Project Location: Along West Bellfort, from approximately 300-feet west of Buffalo Speedway to the east side of Stella Link(Key Map No. 532S, 532T)

Project No: WBS No. S-000900-0125-4

The City: THE CITY OF HOUSTON, 900 Bagby Street, Houston, Texas 77002 (the "City")

and

Contractor: _____

(Address for Written Notice) _____

_____

Fax Number: _____ **Phone Number:** _____

City Engineer, with respect to Sections 4.3 thru 4.5 of the General Conditions, is:

J. Timothy Lincoln, P.E. (or his successor)

P. O. Box 1562, Houston, Texas 77251-1562 (Address for Written Notice)

City Engineer, with respect to all other terms of the General Conditions, is:

Joseph T. Myers, P.E. (or his successor)

Fax Number: (832) 395-2410

THE CITY AND CONTRACTOR AGREE AS FOLLOWS:

ARTICLE 1
THE WORK OF THE CONTRACT

1.1 Contractor shall perform the Work in accordance with the Contract.

ARTICLE 2
CONTRACT TIME

2.1 Contractor shall achieve Date of Substantial Completion within **220** days after Date of Commencement of the Work, subject to adjustments of Contract Time as provided in the Contract.

2.2 The Parties recognize that time is of the essence for this Agreement and that the City will suffer financial loss if the Work is not completed within the Contract Time. Parties also recognize delays, expense, and difficulties involved in proving in a legal or arbitration proceeding actual loss suffered by the City if the Work is not completed on time. Accordingly, instead of requiring any such proof, the Parties agree that as liquidated damages for delay (but not as a penalty), Contractor shall pay the City the amount stipulated in Document 00800 – Supplementary Conditions, for each day beyond Contract Time.

ARTICLE 3
CONTRACT PRICE

3.1 Subject to terms of the Contract, the City will pay Contractor in current funds for Contractor's performance of the Contract, Contract Price of **$** which includes Alternates, if any, accepted below.

3.2 The City accepts Alternates as follows:

****
Delete or add lines below to indicate all Alternates that were included in Request for competative sealed proposals. Remove brackets and instructions when done. Change color of remaining text to black.
****

Alternate No. 1 ___*[Accepted or Not Accepted]*_____
Alternate No. 2 ___*[Accepted or Not Accepted]*_____
Alternate No. 3 ___*[Accepted or Not Accepted]*_____
Alternate No. 4 ___*[Accepted or Not Accepted]*_____

ARTICLE 4
PAYMENTS

4.1 The City will make progress payments to Contractor as provided below and in Conditions of the Contract.

4.2 The Period covered by each progress payment is one calendar month ending on the [X] 15th or [ ] last day of the month.

4.3 The City will issue Certificates for Payment and will make progress payments on the basis of such Certificates as provided in Conditions of the Contract.

4.4 Final payment, constituting entire unpaid balance of Contract Price, will be made by the City to Contractor as provided in Conditions of the Contract.

ARTICLE 5
CONTRACTOR REPRESENTATIONS

5.1 Contractor represents:

5.1.1 Contractor has examined and carefully studied Contract documents and other related data identified in Request For or Competitive Sealed Proposals or Competitive Sealed Bids.

5.1.2 Contractor has visited the site and become familiar with and is satisfied as to general, local, and site conditions that may affect cost, progress, and performance of the Work.

5.1.3 Contractor is familiar with and is satisfied as to all federal, state, and local laws and regulations that may affect cost, progress, and performance of the Work.

5.1.4 Contractor has carefully studied all: (1) reports of explorations and tests of subsurface conditions at or contiguous to the site and all drawings of physical conditions in or relating to existing surface or subsurface structures at or contiguous to the site (except Underground Facilities) which have been identified in Contract

documents and (2) reports and drawings of a hazardous environmental condition, if any, at the site which has been identified in Contract documents.

5.1.5 Contractor has obtained and carefully studied (or assumes responsibility for having done so) all additional or supplementary examinations, investigations, explorations, tests, studies, and data concerning conditions (surface, subsurface, and Underground Facilities) at or contiguous to the site which may affect cost, progress, or performance of the Work or which relate to any aspect of the means, methods, techniques, sequences, and procedures of construction to be employed by Contractor, including applying specific means, methods, techniques, sequences, and procedures of construction, if any, expressly required by the Contract to be employed by Contractor, and safety precautions and programs incident thereto

5.1.6 Contractor does not consider that any further examinations, investigations, explorations, tests, studies, or data are necessary for performance of the Work at Contract Price, within Contract Time, and in accordance with the Contract.

5.1.7 Contractor is aware of general nature of work to be performed by the City and others at the site that relates to the Work as indicated in Contract documents.

5.1.8 Contractor has correlated information known to Contractor, information and observations obtained from visits to the site, reports and drawings identified in the Contract, and all additional examinations, investigations, explorations, tests, studies, and data with the Contract.

5.1.9 Contractor has given City Engineer written notice of all conflicts, errors, ambiguities, or discrepancies that Contractor has discovered in the Contract, and written resolution thereof by City Engineer is acceptable to Contractor.

5.1.10 Contract documents are generally sufficient to indicate and convey understanding of all terms and conditions for performance and furnishing of the Work.

ARTICLE 6
MISCELLANEOUS PROVISIONS

6.1 The Contract may be terminated by either Party as provided in Conditions of the Contract.

6.2 The Work may be suspended by the City as provided in Conditions of the Contract.

ARTICLE 7
ENUMERATION OF CONTRACT DOCUMENTS

7.1 The following documents are incorporated into this Agreement:

7.1.1 Document 00700 - General Conditions.

7.1.2 Document 00800 - Supplementary Conditions.

7.1.3 Division 01 - General Requirements.

7.1.4 Divisions 02 through 16 of Specifications.

7.1.5 Drawings listed in Document 00015 - List of Drawings. Drawing No. _____and bound separately.

7.1.6 Addenda [and Riders] which apply to the Contract, are as follows:

Addendum No. 1, dated None

Addendum No. 2, dated None

Addendum No. 3, dated None

Rider No. [ ], dated None

7.1.7 Other documents:

	Document No.	Title
[X]	00410B	Bid Form – Part B
[X]	00470	Standard Pre-Bid Participation Plan Document
[ ]	00471	Pre-Bid Good Faith Efforts Report
[ ]	00472	Goal Deviation Request
[ ]	00500	Form of Business
[X]	00501	Resolution of Contractor (if a corporation)
[ ]	00570	Amended S/MWBE Participation Plan
[ ]	00571	Contractor's Good Faith Efforts Report
[ ]	00572	Plan Deviation Request
[ ]	00608	Contractor's Certification Regarding Non-Segregated Facilities for Project Funded by AIP Grant
[X]	00610	Performance Bond
[X]	00611	Statutory Payment Bond
[X]	00612	One-year Maintenance Bond
[X]	00613	One-year Surface Correction Bond
[X]	00620	Affidavit of Insurance (with the Certificate of Insurance attached)
[ ]	00623	Contractor's Act of Assurance (SRF Form ED-103)
[X]	00624	Affidavit of Compliance with Affirmative Action Program
[ ]	00628	Affidavit of Compliance with Disadvantaged Business Enterprise (DBE) Program for Project Funded By AIP Grant
[X]	00630	(POP-2) Certification of Compliance with Pay or Play Program
[X]	00631	(POP-3) City of Houston Pay or Play Program – List of Subcontractors
[X]	00800	Supplementary Conditions for Project CIP or AIP Funded
[ ]	00801	Supplementary Conditions for Project AIP Funded
[ ]	00802	SRF Supplementary Conditions
[X]	00805	Equal Employment Opportunity Program Requirements
[ ]	00806	EPA DBE and Wage Rate Requirements (SRF only)
[ ]	00807	Bidder/Contractor Requirements for DBE Program
[X]	00808	Minority and Women-owned Business Enterprise (MWBE) & Persons with Disabilities Business Enterprise (PDBE) Program
[ ]	00810	Federal Wage Rate - Highway
[ ]	00811	Federal Wage Rate - Building
[ ]	00812	Federal Wage Rate - Heavy
[X]	00820	Wage Rate for Engineering Construction
[ ]	00821	Wage Rate for Building Construction
[ ]	00830	Trench Safety Geotechnical Information
[X]	00840	Pay or Play Program
[ ]	00912	Rider

ARTICLE 8
SIGNATURES

8.1 This Agreement is executed in two original copies and is effective as of the date of countersignature by City Controller.

CONTRACTOR:

By: _____

Name: _____

Title: _____

Date: _____

Tax Identification Number: _____

(If Joint Venture)

By: _____

Name: _____

Title: _____

Date: _____

Tax Identification Number: _____

CITY OF HOUSTON, TEXAS

APPROVED:

By: _____
Director,
Department of Public Works and Engineering

SIGNED:

By: _____
Mayor

COUNTERSIGNED:

By: _____
City Controller

Date Countersigned:

_____

ATTEST/SEAL:

By: _____
City Secretary

8.2 This Contract and Ordinance have been reviewed as to form by the undersigned legal assistant and have been found to meet established Legal Department criteria. Legal Department has not reviewed the content of these documents.

_____ _____
Legal Assistant Date

END OF DOCUMENT

Document 00570

CONTRACTOR'S REVISED MWSBE PARTICIPATION PLAN

As soon as the Contractor becomes aware that the Contractor may not abide by the most current approved Plan, the Contractor shall submit this completed form with a Record of Post-Bid Good Faith Efforts (Document 00571), a Request for Plan Deviation (Document 00572), and any other document evidencing "Good Faith Efforts", as required by the Good Faith Efforts Policy (Document 00808). The City will review this Revised Participation Plan and may approve this Revised Plan if the Contractor has made Good Faith Efforts. For more information, visit http://www.houstontx.gov/obo.

Original Participation Plan Percentage	MBE	WBE	SBE	Revised Participation Plan Percentage	MBE	WBE	SBE

NAICS Code (6 digit)	Description of Work (Plan Sheet #, Unit Price #, Scope of Work #, as applicable)	% of Total Bid Price (2 decimal places)	Cert. Type for Goal (MBE, WBE, SBE)	Certified Firm Name Firm Address Contact Name Phone No. and E-Mail (if available)

Signature for Company: _____* Date: _____
Print Name: _____ Phone: _____

*I understand that supplying inaccurate information may violate Texas Penal Code Section 37.10 and lead to City sanctions.

Document 00570

CONTINUATION PAGE

NAICS Code (6 digit)	Plan Item Number (if applicable)/ Description of Work	% of Total Bid Price (2 decimal places)	Cert. Type for Goal (MBE, WBE, SBE)	Certified Firm Name Firm Address Contact Name Phone No. and E-Mail (if available)

Signature for Company: _____* Date: _____
Print Name: _____ Phone: _____

*I understand that supplying inaccurate information may violate Texas Penal Code Section 37.10 and lead to City sanctions.

Document 00571

RECORD OF POST-AWARD GOOD FAITH EFFORTS

Contractor Name: _____ **Project Name:**_____

A Contractor that may be unable to follow an agreed Participation Plan (Document 00470 or 00570) must submit this completed form, a Plan Deviation Request Form (Document 00572), and any other documentation of "Good Faith Efforts" (see Document 00808) that the OBO Representative may require. The Contractor shall submit one completed Document 00571 (Part A) for each Certified Firm that is no longer performing part or all of its work duties under the Approved Plan. The Contractor has the burden to demonstrate "Good Faith Efforts" to meet the MWSBE goal, which includes correctly and accurately preparing and submitting this form and other efforts described in the Good Faith Efforts Policy (Document 00808). The Office of Business Opportunity may review Participation Plan and Good Faith Efforts from time to time and may request that the Contractor submit this form and other information.

UNLESS THE CONTRACTOR MEETS THE GOALS IN THE AGREED PARTICIPATION PLAN, FAILURE TO SUBMIT THIS FORM MAY RESULT IN A DEFAULT OF THE CONTRACT.

PART A (REASON FOR NON-USE OF CERTIFIED FIRM IN AGREED PLAN)

NAICS Code	Plan Item No.	MWSBE Type for Goal	Certified Firm Name, Address, Phone No. and E-mail	Plan Goal & Actual Use (in % of total)	Method of Contact	Reason for Non-Use (why the Contractor was not able to use the Certified Firm in accordance with the Agreed Plan)
				Plan %: ____ Actual %: ____	Phone ☐ E-mail ☐ Fax ☐	

PART B (REASON FOR NONUSE OF REPLACEMENT CERTIFIED FIRMS—IF APPLICABLE)

NAICS Code	Plan Item No.	MWSBE Type for Goal	Certified Firm Name Address, Phone No. and E-Mail	Certified Firm Contact Person	Method of Contact	Prime Contact Date	Certified Firm Response	Results of Contact (why Certified Firm was unsuitable or unusable)
					Phone ☐ E-mail ☐ Fax ☐			
					Phone ☐ E-mail ☐ Fax ☐			

Authorized Signature: _____ Date: _____ Phone: _____

Print Name: _____ Email Address: _____

Document 00571

PART B CONTINUATION (REASON FOR NONUSE OF REPLACEMENT CERTIFIED FIRMS)

NAICS Code	Plan Item No.	MWSBE Type for Goal	Certified Firm Name Address, Phone No. and E-Mail	Certified Firm Contact Person	Method of Contact	Prime Contact Date	Certified Firm Response	Results of Contact (why Certified Firm was unsuitable or unusable)
					Phone ☐ E-mail ☐ Fax ☐			
					Phone ☐ E-mail ☐ Fax ☐			
					Phone ☐ E-mail ☐ Fax ☐			
					Phone ☐ E-mail ☐ Fax ☐			
					Phone ☐ E-mail ☐ Fax ☐			
					Phone ☐ E-mail ☐ Fax ☐			
					Phone ☐ E-mail ☐ Fax ☐			
					Phone ☐ E-mail ☐ Fax ☐			

Authorized Signature: _____ Date: _____ Phone: _____

Print Name: _____ Email Address: _____

Document 00572

CONTRACTOR'S REQUEST FOR PLAN DEVIATION

Contractor Name:_____

Project Name:_____

Approved Participation Plan Percentages	**MBE**	**WBE**	**SBE**	**Total**
	%	%	%	%

Contractor's Requested Participation Plan	**MBE**	**WBE**	**SBE**	**Total**
	%	%	%	%

Justification: Please provide the reason the Contractor is unable to meet the MWSBE goal in the Approved Plan.

_____

_____

_____

Good Faith Efforts: Please list any efforts not listed in Contractor's Record of Good Faith Effort (Document 00571).

_____

_____

_____

_____

Please attach additional pages if the space for Justification or Good Faith Efforts is insufficient.

Date:_____ *Contractor:_____

E-mail: _____ *By:_____

Phone Number: _____ Title:_____

*I understand that the approval of this deviation request does not constitute a final decision by OBO that Contractor has used Good Faith Efforts in meeting the Contracting Goal.

FOR OFFICIAL USE ONLY: Approved ☐ Not Approved ☐

OBO Representative Date:_____

_____ Title: _____

Document 00600

LIST OF PROPOSED SUBCONTRACTORS AND SUPPLIERS

PROJECT NAME: 24-Inch Water Line Along West Bellfort From Buffalo Speedway to Stella Link
TOTAL DBE AWARD: $ _____
ORIG. CONTRACT PRICE: $_____ TOTAL MWSBE AWARD: $ _____
PROJECT NO.: WBS No. S-000900-0125-4 TOTAL HUB AWARD: $ _____
DATE OF REPORT: _____ TOTAL PDBE AWARD: $ _____

NAICS (6 digits)	**SUBCONTRACTOR OR SUPPLIER (INCLUDE "MWSBE", "PDBE", "DBE", OR "HUB" DESIGNATION)**[2]	**ADDRESS**	**SCOPE OF WORK**[3]

NOTES:
1. RETURN FOR ALL PROJECTS AS REQUIRED IN DOCUMENT 00800 – SUPPLEMENTARY CONDITIONS. RETURN WITHIN THE SPECIFIED NUMBER OF DAYS AFTER RECEIPT OF NOTICE OF INTENT TO AWARD
2. DESIGNATE FIRMS CERTIFIED BY THE CITY OFFICE OF BUSINESS OPPORTUNITY ON THIS FORM.
3. DESCRIBE THE WORK TO BE PERFORMED, FOR WHICH THE FIRM IS CERTIFIED, SUCH AS "PAVING", "ELECTRICAL", ETC.
4. **CONTRACTOR SHALL EXECUTE CONTRACTS WITH APPROVED SUBCONTRACTORS AND SUPPLIERS WITHIN 30 DAYS AFTER THE DATE OF THE NOTICE TO PROCEED. COPIES OF CONTRACTS WITH DESIGNNATED FIRMS MUST BE SENT TO THE OFFICE OF BUSINESS OPPORTUNITY.**

SIGNATURE: _____ COMPANY NAME: _____

NAME: _____ TITLE: _____
(Type or Print)

Document 00600

Continuation Page

PROJECT NAME: 24-Inch Water Line Along West Bellfort From Buffalo Speedway to Stella Link
DATE OF REPORT: _____
PROJECT NO.: WBS No. S-000900-0125-4

NAICS (6 digits)	**SUBCONTRACTOR OR SUPPLIER (INCLUDE "MWSBE", "PDBE", "DBE", OR "HUB" DESIGNATION)**[2]	**ADDRESS**	**SCOPE OF WORK**[3]

SIGNATURE: _____ COMPANY NAME: _____

NAME: _____ TITLE: _____
(Type or Print)

END OF DOCUMENT

Document 00601

DRUG POLICY COMPLIANCE AGREEMENT

I, _____ _____,
Name Title

of _____
Contractor

have authority to bind Contractor with respect to its Bid, Proposal, or performance of any and all contracts it may enter into with the City of Houston; and that by making this Agreement, I affirm that Contractor is aware of and by the time the Contract is awarded will be bound by and agree to designate appropriate safety impact positions for company employee positions, and to comply with the following requirements before the City issues a Notice to Proceed:

1. Develop and implement a written Drug Free Workplace Policy and related drug testing procedures for Contractor that meet the criteria and requirements established by the Mayor's Amended Policy on Drug Detection and Deterrence (Mayor's Drug Policy) and the Mayor's Drug Detection and Deterrence Procedures for Contractors (Executive Order No. 1-31).

2. Obtain a facility to collect urine samples consistent with Health and Human Services (HHS) guidelines and an HHS-certified drug-testing laboratory to perform drug tests.

3. Monitor and keep records of drug tests given and results; and upon request from the City of Houston, provide confirmation of such testing and results.

4. Submit semi-annual Drug Policy Compliance Declarations.

I affirm on behalf of Contractor that full compliance with the Mayor's Drug Policy and Executive Order No. 1-31 is a material condition of the Contract with the City of Houston,

I further acknowledge that falsification, failure to comply with or failure to timely submit declarations or documentation in compliance with the Mayor's Drug Policy or Executive Order No. 1-31 will be considered a breach of the Contract with the City and may result in non-award or termination of the Contract by the City.

_____ _____
Contractor Title

_____ _____
Signature Date

END OF DOCUMENT

Document 00604

HISTORY OF OSHA ACTIONS AND LIST OF ON-THE-JOB INJURIES

Prior to award of the Contract, Low Bidder will be required to file the following with the City:

1. A history of all OSHA actions, advisories, etc., Contractor has received on all jobs worked in any capacity, prime or subcontractor. The history shall be for the two-year period preceding the Bid Date of the Project.

2. A list of all on-the-job injuries, accidents, and fatalities suffered by any present or former employees of Contractor during the same two-year period.

3. If less than the two-year period, give the date Contractor started doing business.

This information must be submitted to the City within the time period stated in Document 00498 - Notice of Intent to Award. An officer of the company must certify in a notarized statement that the information submitted is true and correct.

END OF DOCUMENT

Document 00605

LIST OF SAFETY IMPACT POSITIONS

****

Contractor is to provide a complete List of Employee Classifications that are considered in a "Safety Impact Position" and the number of employees in each of those classifications.

****

Employee Classification	**Number of Employees**

END OF DOCUMENT

Document 00606

CONTRACTOR'S CERTIFICATION OF
NO SAFETY IMPACT POSITIONS IN PERFORMANCE OF A CITY CONTRACT

BEFORE ME, the undersigned authority, on this day personally appeared

_____,
Affiant

who being by me duly sworn on his oath stated that he is _____
Title

of _____
Contractor

and that no employee safety impact positions, as defined in §5.17 of Executive Order No. 1-31, will be involved in performing _____.
Project

Contractor agrees and covenants that it shall immediately notify the City of Houston Director of Personnel if any safety impact positions are established to provide services in performing this City Contract.

_____
Affiant's Signature

SWORN AND SUBSCRIBED before me on this day of _____, 20___.

_____
Notary Public in and for the State of TEXAS

_____
Print or Type Notary Public Name

My Commission Expires: _____
Expiration Date

END OF DOCUMENT

Document 00607

CERTIFICATION REGARDING DEBARMENT,
SUSPENSION, AND OTHER RESPONSIBILITY MATTERS

Contractor certifies to the best of its knowledge and belief that it and its principals:

1. Are not presently debarred, suspended, proposed for debarment, declared ineligible, or voluntarily excluded from covered transactions by any Federal, State, or local department or agency;

2. Have not within a three-year period preceding this proposal been convicted of or had a civil judgment rendered against them for commission of fraud or a criminal offense in connection with obtaining, attempting to obtain, or performing a public (Federal, State, or local) transaction or contract under a public transaction: violation of Federal or State antitrust statutes or commission of embezzlement, theft, forgery, bribery, falsification or destruction of records, making false statements, or receiving stolen property;

3. Are not presently indicted for or otherwise criminally or civilly charged by a government entity (Federal, State, or local) with commission of any of the offenses enumerated in paragraph 2 of this certification; and

4. Have not within a three-year period preceding this application/proposal had one or more public transactions (Federal, State, or local) terminated for cause or default.

I understand that a false statement on this certification may be grounds for rejection of this proposal or termination of the award. In addition, under 18 USC Section 1001, a false statement may result in a fine of up to $10,000 or imprisonment for up to five years, or both.

Company:

_____
Typed Name & Title of Authorized Representative

_____ _____
Signature of Authorized Representative Date

☐ I am unable to certify the above statements. My explanation is attached.

END OF DOCUMENT

Document 00610

PERFORMANCE BOND

THAT WE, _____, as Principal, (the "Contractor"), and the other subscriber hereto, _____, as Surety, do hereby acknowledge ourselves to be held and firmly bound to the City of Houston (the "City"), a municipal corporation, in the penal sum of $_____ for the payment of which sum, well and truly to be made to the City, its successors and assigns, Contractor and Surety do bind themselves, their heirs, executors, administrators, successors and assigns, jointly and severally.

THE CONDITIONS OF THIS OBLIGATION ARE SUCH THAT:

WHEREAS, the Contractor has on or about this day executed a Contract in writing with the City for _____
_____, all of such work to be done as set out in full in said Contract documents therein referred to and adopted by the City Council, all of which are made a part of this instrument as fully and completely as if set out in full herein.

NOW THEREFORE, if the said Contractor shall faithfully and strictly perform the Contract in all its terms, provisions, and stipulations in accordance with its true meaning and effect, and in accordance with the Contract documents referred to therein and shall comply strictly with each and every provision of the Contract and with this Bond, then this obligation shall become null and void and shall have no further force and effect; otherwise the same is to remain in full force and effect. Should the Contractor fail to faithfully and strictly perform the Contract in all its terms, including but not limited to the indemnifications thereunder, the Surety shall be liable for all damages, losses, expenses and liabilities that the City may suffer in consequence thereof, as more fully set forth herein.

It is further understood and agreed that the Surety does hereby relieve the City or its representatives from the exercise of any diligence whatever in securing compliance on the part of the Contractor with the terms of the Contract, and the Surety agrees that it shall be bound to take notice of and shall be held to have knowledge of all acts or omissions of the Contractor in all matters pertaining to the Contract. The Surety understands and agrees that the provision in the Contract that the City will retain certain amounts due the Contractor until the expiration of 30 days from the acceptance of the Work is intended for the City's benefit, and the City will have the right to pay or withhold such retained amounts or any other amount owing under the Contract without changing or affecting the liability of the Surety hereon in any degree.

It is further expressly agreed by Surety that the City or its representatives are at liberty at any time, without notice to the Surety, to make any change in the Contract documents and in the Work to be done thereunder, as provided in the Contract, and in the terms and conditions thereof, or to make any change in, addition to, or deduction from the Work to be done thereunder; and that such changes, if made, shall not in any way vitiate the obligation in this Bond and undertaking or release the Surety therefrom.

It is further expressly agreed and understood that the Contractor and Surety will fully indemnify and save harmless the City from any liability, loss, cost, expense, or damage arising out of Contractor's performance of the Contract.

If the City gives Surety notice of Contractor's default, Surety shall, within 45 days, take one of the following actions:

1. Arrange for Contractor, with consent of the City, to perform and complete the Contract; or

2. Take over and assume completion of the Contract itself, through its agents or through independent contractors, and become entitled to the payment of the balance of the Contract Price.

If the Surety fails to take either of the actions set out above, it shall be deemed to have waived its right to perform and complete the Contract and receive payment of the balance of the Contract Price and the City shall be entitled to enforce any remedies available at law, including but not limited to completing the Contract itself and recovering any cost in excess of the Original Contract Price from the Surety.

This Bond and all obligations created hereunder shall be performable in Harris County, Texas. This Bond is given in compliance with the provisions of Chapter 2253, Texas Government Code, as amended, which is incorporated herein by this reference.

Notices required or permitted hereunder shall be in writing and shall be deemed delivered when actually received or, if earlier, on the third day following deposit in a United States Postal Service post office or receptacle, with proper postage affixed (certified mail, return receipt requested), addressed to the respective other Party at the address prescribed in the Contract documents, or at such other address as the receiving party may hereafter prescribe by written notice to the sending party.

IN WITNESS THEREOF, the said Contractor and Surety have signed and sealed this instrument on the respective dates written below their signatures and have attached current Power of Attorney.

ATTEST, SEAL: (if a corporation)
WITNESS: (if not a corporation)

_____
Name of Contractor

By: _____
Name:
Title:

By: _____
Name:
Title:
Date:

ATTEST/SURETY WITNESS:

(SEAL)

_____
Full Name of Surety

_____
Address of Surety for Notice

_____

_____
Telephone Number of Surety

By: _____
Name:
Title:
Date:

By: _____
Name:
Title: Attorney-in-Fact
Date:

This Ordinance or Contract has been reviewed as to form by the undersigned legal assistant and have been found to meet established Legal Department criteria. The Legal Department has not reviewed the content of these documents.

_____ _____
Legal Assistant Date

END OF DOCUMENT

Document 00611

STATUTORY PAYMENT BOND

THAT WE, _____, as Principal, hereinafter called Contractor and the other subscriber hereto, _____, as Surety, do hereby acknowledge ourselves to be held and firmly bound unto the City of Houston, a municipal corporation, in the sum of $_____ for the payment of which sum, well and truly to be made to the City of Houston, and its successors, the said Contractor and Surety do bind themselves, their heirs, executors, administrators, successors, jointly and severally.

THE CONDITIONS OF THIS OBLIGATION ARE SUCH THAT:

WHEREAS, the Contractor has on or about this day executed a contract in writing with the City of Houston for _____
_____, all of such work to be done as set out in full in said Contract documents therein referred to and adopted by the City Council, all of which are made a part of this instrument as fully and completely as if set out in full herein;

NOW, THEREFORE, if the said Contractor shall pay all claimants supplying labor and materials to him or a Subcontractor in the prosecution of the Work provided for in the Contract, then, this obligation shall be void; otherwise the same is to remain in full force and effect;

PROVIDED HOWEVER, that this Bond is executed pursuant to the provisions of Chapter 2253, Texas Government Code, as amended, and all liabilities on this Bond shall be determined in accordance with the provisions of said Article to the same extent as if it were copied at length herein.

IN WITNESS THEREOF, the said Contractor and Surety have signed and sealed this instrument on the respective dates written below their signatures and have attached current Power of Attorney.

ATTEST, SEAL: (if a corporation)
WITNESS: (if not a corporation)

_____
Name of Contractor

By: _____
Name:
Title:

By: _____
Name:
Title:
Date:

ATTEST/SURETY WITNESS:

(SEAL)

_____
Full Name of Surety

_____
Address of Surety for Notice

_____

_____
Telephone Number of Surety

By: _____
Name:
Title:
Date:

By: _____
Name:
Title: Attorney-in-Fact
Date:

This Ordinance or Contract has been reviewed as to form by the undersigned legal assistant and have been found to meet established Legal Department criteria. The Legal Department has not reviewed the content of these documents.

_____
Legal Assistant

_____
Date

END OF DOCUMENT

Document 00612

ONE-YEAR MAINTENANCE BOND

THAT WE, _____, as Principal, hereinafter called Contractor, and the other subscriber hereto, _____, as Surety, do hereby acknowledge ourselves to be held and firmly bound to the City of Houston, a municipal corporation, in the sum of $_____, for the payment of which sum well and truly to be made to the City of Houston and its successors, the said Contractor and Surety do bind themselves, their heirs, executors, administrators, successors, jointly and severally.

THE CONDITIONS OF THIS OBLIGATION ARE SUCH THAT:

WHEREAS, the Contractor has on or about this day executed a Contract in writing with the City of Houston for _____
_____,
all of such work to be done as set out in full in said Contract documents therein referred to and adopted by the City Council, all of which are made a part of this instrument as fully and completely as if set out in full herein.

NOW THEREFORE, if the said Contractor shall comply with the provisions of Paragraph 11.5.1 of the General Conditions, and correct work not in accordance with the Contract documents discovered within the established one-year period, then this obligation shall become null and void, and shall be of no further force and effect; otherwise, the same is to remain in full force and effect.

Notices required or permitted hereunder shall be in writing and shall be deemed delivered when actually received or, if earlier, on the third day following deposit in a United States Postal Service post office or receptacle, with proper postage affixed (certified mail, return receipt requested), addressed to the respective other party at the address prescribed in the Contract documents, or at such other address as the receiving party may hereafter prescribe by written notice to the sending party.

IN WITNESS THEREOF, the said Contractor and Surety have signed and sealed this instrument on the respective dates written below their signatures and have attached current Power of Attorney.

ATTEST, SEAL: (if a corporation)
WITNESS: (if not a corporation)

_____
Name of Contractor

By: _____
Name:
Title:

By: _____
Name:
Title:
Date:

ATTEST/SURETY WITNESS:

(SEAL)

_____
Full Name of Surety

_____
Address of Surety for Notice

_____

_____
Telephone Number of Surety

By: _____
Name:
Title:
Date:

By: _____
Name:
Title: Attorney-in-Fact
Date:

This Ordinance or Contract has been reviewed as to form by the undersigned legal assistant and have been found to meet established Legal Department criteria. The Legal Department has not reviewed the content of these documents.

_____
Legal Assistant

_____
Date

END OF DOCUMENT

Document 00613

ONE-YEAR SURFACE CORRECTION BOND

THAT WE, _____, as Principal, hereinafter called Contractor, and the other subscriber hereto, _____, as Surety, do hereby acknowledge ourselves to be held and firmly bound to the City of Houston, a municipal corporation, in the sum of $_____ such sum being equal to four percent of the Original Contract Price, for the payment of which sum to be made to the City of Houston and its successors, Contractor and Surety do bind themselves, their successors, jointly and severally.

THE CONDITIONS OF THIS OBLIGATION ARE SUCH THAT:

WHEREAS, the Contractor has entered into a Contract in writing with the City of Houston, Texas, dated of even date herewith, for _____
_____, all of such work to be done in accordance with the Contract documents therein referred to, and adopted by the City Council of the City of Houston.

NOW THEREFORE, if the Contractor shall comply with the provisions of Paragraph 11.5.1 of the General Conditions, and repair, replace, restore, and correct surface work associated with backfill operations of subsurface work not in accordance with the Contract documents discovered within one year from the date that the One-year Maintenance Bond has expired, then this obligation shall become null and void, and shall be of no further force and effect; otherwise, the same is to remain in full force and effect.

Notices required or permitted hereunder shall be in writing and shall be deemed delivered when actually received or, if earlier, on the third day following deposit in a United States Postal Service post office or receptacle, with proper postage affixed (certified mail, return receipt requested), addressed to the respective other party at the address prescribed in the Contract documents, or at such other address as the receiving party may hereafter prescribe by written notice to the sending party.

IN WITNESS THEREOF, the said Principal and Surety have signed and sealed this instrument on the respective dates written below their signatures.

ATTEST, SEAL: (if a corporation)
WITNESS: (if not a corporation)

By: _____
Name:
Title:

_____
Name of Contractor

By: _____
Name:
Title:
Date:

ATTEST/SURETY WITNESS:

(SEAL)

_____
Full Name of Surety

_____
Address of Surety for Notice

_____

_____
Telephone Number of Surety

By: _____
Name:
Title:
Date:

By: _____
Name:
Title: Attorney-in-Fact
Date:

This Ordinance or Contract has been reviewed as to form by the undersigned legal assistant and have been found to meet established Legal Department criteria. The Legal Department has not reviewed the content of these documents.

_____
Legal Assistant

_____
Date

END OF DOCUMENT

Document 00620

AFFIDAVIT OF INSURANCE

BEFORE ME, the undersigned authority, on this day personally appeared

_____, who
Affiant

being by me duly sworn on his oath stated that he is _____, of
Title

_____,
Contractor's Company Name

the Contractor named and referred to within the Contract documents; that he is fully competent and authorized to give this affidavit and that the attached original insurance certificate truly and accurately reflects the insurance coverage that is now available and will be available during the term of the Contract.

_____
Affiant's Signature

SWORN AND SUBSCRIBED before me on _____.
Date

_____
Notary Public in and for the State of TEXAS

_____
Print or type Notary Public name

My Commission Expires: _____
Expiration Date

END OF DOCUMENT

Document 00624

AFFIDAVIT OF COMPLIANCE WITH
AFFIRMATIVE ACTION PROGRAM

BEFORE ME, the undersigned authority, on this day personally appeared _____, who
Affiant

being by me duly sworn on his oath stated that he is _____,
Title

of _____,
Contractor

the Contractor named and referred to within the Contract documents; that he is fully competent and authorized to give this affidavit and that the Contract is in compliance with the Affirmative Action Program of the City and has done all that is required by the Contract documents, the Affirmative Action Program, and pursuant to Chapter 15, Code of Ordinances, City of Houston, §15.16 et seq.

_____
Affiant's Signature

SWORN AND SUBSCRIBED before me on this day of _____, 20___.

_____
Notary Public in and for the State of TEXAS

_____
Print or Type Notary Public Name

My Commission Expires: _____
Expiratio

END OF DOCUMENT

Document 00630
(POP-2)
City of Houston
Certification of Compliance with
Pay or Play Program

Contractor Name: _____ $ _____
(Contractor/Subcontractor) ***(Amount of Contract)***

Contractor Address: _____

Project No.: «WBSNo» _____

Project Name: «LegalPrjName» _____

POP Liaison Name: _____

In accordance with the City of Houston Pay or Play Program authorized by Ordinance 2007-534 and Executive Order 1-7, Contractor/Subcontractor agrees to abide by the terms of this Program. This certification is required of all contractors for contracts subject to the program. You must agree EITHER to PAY or to PLAY for all covered employees. The Contractor/Subcontractor may also Pay on behalf of some covered employees and Play on behalf of other covered employees.

The Contractor/Subcontractor will comply with all provisions of the Pay or Play Program and will furnish all information and reports requested to determine compliance with program requirements of the Pay or Play Program (See Executive Order 1-7 for the terms of the Pay or Play program) The criteria of the program is as follows:

The Contractor/Subcontractor agrees to **"Pay"** $1.00 per hour for work performed by covered employees under the contract with the City. If independent contract labor is utilized the Contractor/Subcontractor agrees to report hours worked by the independent contract laborer and pay $1.00 per hour for work performed.

Otherwise the Contractor/Subcontractor agrees to **"Play"** by providing health benefits to each covered employee. The health benefits must meet the following criteria:

1. The employer will contribute no less than $150 per employee per month toward the total premium cost for single coverage only; and
2. The employee contribution, if any amount, will be no greater than 50% of the total premium cost and no more than $150 per month.
3. Pursuant to E.O. 1-7 section 4.04 a contractor is deemed to have complied with respect to a covered employee who is not provided health benefits if the employee refuses the benefits and the employee's contribution to the premium is no more than $40 per month.

Please select whether you choose to:	Pay	Play	Both

The Contractor/Subcontractor will file compliance reports with the City, which will include activity for covered employees subject to the program, in the form and to the extent requested by the administering department. Compliance reports shall contain information including, but not limited to, documentation showing employee health coverage and employee work records.
Note: The Contractor is responsible to the City for the compliance of covered employees of covered subcontractors and only forms that are accurate and complete will be accepted.

*Estimated Number of:	Prime Contractor	Sub-Contractor
Total Employees on City Job		
Covered Employees		
Non-Covered Employees		
Exempt Employees		

***Required**

I hereby certify that the above information is true and correct.

_____ _____
Contractor ***(Signature)*** Date

_____
Name and Title ***(Print or type)***

Document 00631
(POP-3)
City of Houston
Pay or Play Program
List of Subcontractors

Prime Contractor: _____
Project Number/Description: _____

POP Contact Person: _____
Address: _____
Email: _____
Phone: _____

Note: Include ALL subcontractors (use additional form if necessary)

Subcontractor Name	Supplier Y/N?	Amount of Subcontract	Check One: Pay	Check One: Play	Check One: Both (Pay and Play)	Check One: N/A	Contact Person	Phone	Email Address	Mailing Address

*If the above information is found to be submitted fraudulently with the intent to bypass or deceive the purpose of the Pay or Play Program the contractor will be held liable for all compliance requirements from the inception of the contract. All subcontracts that surpass the $200,000.00 threshold will be responsible for Pay or Play compliance from the inception of the contract.

Affidavit

I hereby solemnly affirm, certify and confirm that the total sub-contract value stated above is the final value of the contract **(*)** including all material costs, fuel, payroll, taxes, fees, profit sharing, labor or any payments in relation to the contracted work and no separate payment or contract has been made for the sub-contract under contract no._____ . The above sub-contract value includes all the costs related to work under the contract. The contractor and sub-contractor(s) agree to inform The Mayor's Office of Business Opportunity of any related cost(s) added to the contracted work and re-submit POP-3 with the current value of the sub-contract. I understand that compliance with "Pay or Play" program is mandatory and nothing has been hidden to circumvent the program requirements.

_____
Contractor Authorized Representative & Title Date
Name & Signature

Document 00633

CERTIFICATION BY PROPOSED MATERIAL SUPPLIERS,
LESSORS, AND PROFESSIONAL SERVICE PROVIDERS
REGARDING EQUAL EMPLOYMENT OPPORTUNITY

Company Name: _____ $_____
(Supplier, Lessor, Professional Service Provider) (Amount of Contract)

Company Address: _____

Company Telephone Number:_____ Fax:_____

E-mail Address: _____

Web Page/URL Address:_____

Company Tax Identification Number: _____

Project No.: [*WBS/CIP/AIP/File No.*]_____

Project Name: [*Legal Project Name*]_____

In accordance with the City of Houston Ordinance 78-1538, Supplier/Lessor/Professional Service Provider represents to be an equal opportunity employer and agrees to abide by the terms of the Ordinance. This certification is required of all Suppliers/Lessors/Professional Service Providers (herein Supplier) with contracts in the amount of $10,000.00 or more.

[ ] Yes [ ] No Supplier agrees not to discriminate against any employee or applicant for employment because of race, religion, color, sex, national origin, or age.

[ ] Yes [ ] No Supplier agrees that all qualified applicants will receive consideration for employment without regard to race, religion, color, sex, national origin, or age.

[ ] Yes [ ] No Supplier will comply with all provisions of Executive Order No. 11246 and rules, regulations and applicable orders of the Department of Labor or other Federal Agency responsible for enforcement of applicable equal opportunity and affirmative action provisions and will likewise furnish all information and reports required by the Mayor or Contract Compliance Officers for the purpose of investigation to ascertain and effect compliance with the City of Houston's Office of Affirmative Action and Contract Compliance.

[ ] Yes [ ] No The Supplier shall file and cause their sub-tier contractors to file compliance reports with the City in the form and to the extent as may be prescribed by the Mayor or Contract Compliance Officers. Compliance reports filed at such times as directed shall contain information including, but not limited to, the practices, policies, programs, and employment policies.

I hereby certify that the above information is true and correct.

_____ _____
COMPANY OFFICER (Signature) DATE

_____
NAME AND TITLE (Print or type)

END OF DOCUMENT

****

Instructions:

Before submitting this document, Contractor shall provide

1. *Payment Notifications (00646) to each subcontractor on each contract;*
2. *A copy to the City Monitoring Authority of all applicable Payment Notifications;*
3. *A list to the City Monitoring Authority containing the information requested in this document for each subcontractor from which Contractor has withheld payment; and*
4. *The notarized signature of Contractor's Representative.*

****

Document 00642

MONTHLY SUBCONTRACTOR PAYMENT REPORTING FORM

Legal Project Name:_____

Outline Agreement No.:_____ WBS No.:_____

Contractor's Company Name: _____

Address: _____

CERTIFICATION

_____, Contractor's Representative for the above referenced Contract, hereby certifies that (1) Contractor has paid all subcontractors, except those noted below, (2) Contractor made such payments (a) in proportion to the amount City paid Contractor and (b) in accordance and compliance with all applicable Contract Documents and laws; and (3) Contractor withheld no sums from any subcontractor for allegations of deficiency in Work. The term "subcontractor", as used herein, includes all persons or firms furnishing work, materials, services or equipment Contractor ordered incorporated into Work or placed near the Project for which the City made partial payment.

EXCEPTION: Contractor sent Payment Notifications to the following subcontractors explaining why Contractor withheld payment. Copies are attached.

Subcontractor Name:_____	Subcontractor Name: _____
Street Address: _____	Street Address: _____
City, State, and Zip Code: _____	City, State, and Zip Code: _____
Amount of Payment Withheld:_____	Amount of Payment Withheld: _____
Date Payment First Withheld: _____	Date Payment First Withheld: _____
Description of Good Faith Reason:_____	Description of Good Faith Reason:_____
_____	_____

_____
(Signature of Contractor's Representative)

_____
(Print or Type Name of Contractor's Representative)

SWORN TO AND SUBSCRIBED before me on:

_____
Date

_____
Notary Public in and for the State of Texas

My Commission Expires: _____
Expiration Date

_____
Print or Type Name of Notary Public

****

Instructions:

If Contractor withholds any amount of a payment to a Subcontractor for any reason, the Contractor shall send Payment Notifications to the Subcontractor explaining why the payment was withheld.

Contractor shall provide the City Monitoring Authority with Payment Notifications for each subcontractor from which Contractor has withheld payment. Contractor shall submit all necessary Payment Notifications (Document 00646), Payment Reporting Forms (Document 00642), and other documentation at the same time Contractor submits the Application and Certification for Payment or the Estimate for Payment.

****

Document 00646

PAYMENT NOTIFICATION – EXPLANATION OF WITHHOLDING

Legal Project Name:_____

Outline Agreement No.:_____ WBS No.:_____

Contractor's Company Name: _____

Address: _____

Date: _____

SUBCONTRACTOR PAYMENT INFORMATION:

Subcontractor Name:_____

Street Address: _____

City, State, and Zip Code: _____

Business Phone Number: _____

Amount of Subcontractor Invoice: _____

Amount of Payment Made: _____

Amount of Payment Withheld:_____

Date Payment First Withheld: _____

DETAILED EXPLANATION OF WITHHOLDING: _____

_____

_____

_____

_____

_____ _____

(Signature of Contractor's Representative) (Print or Type Name of Contractor's Representative)

****

List of Changes:

02-04-2005: Added new Paragraph 3.25.1.3 concerning strict liability. Edited Paragraph 3.25.1.1 accordingly. Edited Paragraph 9.6.1.4 to remove the words "retainage of".

08-15-2006: Revised many references to Section(s) to read Paragraph(s). Added Small Business Enterprise (SBE) requirement to Paragraphs 3.5.3, 3.5.3.1, 3.5.3.2 and 3.5.3.3.

08-17-2006: Added new Paragraphs 5.2.4, 5.2.5, 9.2.1 and 9.4.2 concerning prompt payment provisions.

10-10-2006: Added new Paragraphs 9.7.1.8, 9.7.1.9 concerning prompt payment provisions. Changed 9.8.1 to "20 days", and added language to 9.8.2 concerning "7 calendar days" and payment disputes.

03-10-2008: Revised Table 1 after 11.2.11 (Installation Floater), and expanded Paragraph 11.5.1 on Maintenance Bonds.

09-10-2008: Revised 5.2.5[sic] on page 17 to read 5.2.4.

10-24-2008: Revised many sections to include or amend numbering.

08-01-2009: Amended 1.1.6., definition of City Engineer. Amended 2.2 to say "Duties" and added 2.2.2 stating that the contract imposes no implied duty on City. Added 3.5.4 concerning Contractor Participation in the Pay or Play Program. Added 3.28 pertaining to Contractor Debt. Amended 4.1.2 to prohibit the City Engineer from delegating signature authority under 4.4. Amended 4.1.11 stating that City owes no duty to Contractor not stated in contract. Amended 4.3.2 to delete second sentence concerning City Engineers decision as a condition precedent to litigation. Amended 4.6 to require both parties to wave claims, attorney fees, and interest. Amended 11.2.6 to require Contractor to notify the City of any Insurance Policy cancelation or modification. Amended 11.2.8 to exempt Workers' Compensation coverage from certain documentation requirements. Amended Table 1 after 11.2.11 to specify automobile coverage requirements. Added 11.3.3 to address content requirements on Certificates of Insurance. Added 13.3.2 to extend joint and several liability to any series, affiliate, subsidiary, or successor to which Contractor assigns or transfers assets. Amended throughout to standardize references to Sections (x.x), Paragraphs (x.x.x), and Subparagraphs (x.x.x.x and below).

01-15-2010: Amended Sections 4.4 and 4.6 concerning written decisions, findings of fact, and hearings by the City engineer, precedent to litigation, and interest under Chapter 2251 of the Texas Local Government Code. Removed Section 4.5 NON-BONDING MEDIATION and renumbered and renamed Section 4.6 as 4.5 CONDITION PRECEDENT TO SUIT; WAIVER OF ATTORNEY FEES AND INTEREST.

05-01-2010: Amended Subsection 1.1.5 to change "municipal corporation" to "home rule municipality". Amended Subsection 3.9.1.1 to reflect change from Low Sulfur Deisel Fuel (500 ppm) to Ultra Low Sulfur Fuel (15 ppm).

12-07-2010: Amended Section 14.1.1.5 to mirror change in Section 3.9.1.1; Low Sulfur Diesel Fuel was changed to Ultra Low Sulfur Fuel.

12-09-2010: Amended Section 4.5 (and Table of Contents) by adding "Interim Payment Waiver & Release" language from Document 00850. Amended Subsection 11.3 to include new insurance requirements.

12-10-2010: Inserted phrase into definition of Claim (§1.1.7) defining what a Claim can constitute

01-14-2011: Insertion of terms "Business Enterprise" and "Business Enterprise Policy" into definition section (§1.1) and insertion of those terms in §3.5, as appropriate, and deletion of old §3.5.3

01-18-2011: Renaming of §4.5; renumbering of Table of Contents due to introduction of "Interim Payment Waiver & Release" as a separate section (§4.6)

01-31-2011: Edit of Section 4.6, Interim Payment Waiver & Release" to reflect language suggestions of Litigation Division of Legal Dept.

02-09-2011: Edit of language in definitions of "Business Enterprise" and "Business Enterprise Policy"

10-12-2011: Amended Section 8.2, related to delays and extensions of time, to strengthen language suggested in 2011 Construction Law CLE.

10-19-2011: General reformatting of entire document for consistency; updating of header re: date; insertion of "Mayor's Office of Business Opportunity", as appropriate, to refect name change

10-27-2011: Added a definition for "Mayor's Office of Business Opportunity"; amended Section 8.2.2 to refer to Section 4.3.6.2; replaced MWBE with "Business Enterprise", where appropriate; added "persons, or entities" to Section 5.1 to broaden applicable provisions; updated issue date to proposed Issue date of November 1, 2011.

10-31-2011: edited definition of "Business Enterprise"

07-01-2013: Edited Section 3.5.3 to remove the binding arbitration requirement for contractor and subcontractor claims, per change in Office of Business Opportunity policy.

07-25-2013: Removed Section 4.5.1, regarding conditions precedent to suit.

11-01-2014: Changed Section 3.5.2 to reflect a move away from arbitration to mediation to resolve subcontractor disputes; removed requirement for City Engineer's decision before a suit may be brought from Section 4.5.2; included language in Section 5.1.3 requiring submission of written contracts with Subcontractors within 30 days of Notice to Proceed issuance; changed Section 11.2 to reflect required insurance coverages updated for new fiscal year; added more explicit language regarding the City's Additional Insured status in Section 11.2.4 ("Insured Parties") and the City's waiver of subrogation requirement in Section11.2.7 ("Subrogation").

01-01-2015: Changed the Automobile Insurance requirement from $2,000,000 to $1,000,000.

****

Document 00700

GENERAL CONDITIONS

January 1, 2015 EDITION

TABLE OF ARTICLES

1. GENERAL PROVISIONS
2. THE CITY
3. CONTRACTOR
4. ADMINISTRATION OF THE CONTRACT
5. SUBCONTRACTORS AND SUPPLIERS
6. CONSTRUCTION BY THE CITY OR BY SEPARATE CONTRACTORS
7. CHANGES IN THE WORK
8. TIME
9. PAYMENTS AND COMPLETION
10. SAFETY PRECAUTIONS
11. INSURANCE AND BONDS
12. UNCOVERING AND CORRECTION OF THE WORK
13. MISCELLANEOUS PROVISIONS
14. TERMINATION OR SUSPENSION OF THE CONTRACT

ARTICLE 1 - GENERAL PROVISIONS 3

1.1 DEFINITIONS 3
1.2 EXECUTION, CORRELATION, AND INTENT 5
1.3 OWNERSHIP AND USE OF DOCUMENTS 6
1.4 INTERPRETATION 6

ARTICLE 2 - THE CITY 6

2.1 LIMITATIONS OF THE CITY'S OFFICERS AND EMPLOYEES 6
2.2 DUTIES OF THE CITY 6
2.3 AVAILABILITY OF LAND AND USE OF SITE 6
2.4 THE CITY'S RIGHT TO STOP THE WORK 7
2.5 THE CITY'S RIGHT TO CARRY OUT WORK 7

ARTICLE 3 - CONTRACTOR 7

3.1 RESPONSIBILITIES 7
3.2 REVIEW OF CONTRACT AND FIELD CONDITIONS BY CONTRACTOR 7
3.3 SUPERVISION AND CONSTRUCTION PROCEDURES 7
3.4 SUPERINTENDENT 8
3.5 LABOR 8
3.6 PREVAILING WAGE RATES 9
3.7 LABOR CONDITIONS 9
3.8 DRUG DETECTION AND DETERRENCE 9
3.9 MATERIALS & EQUIPMENT 10
3.10 PRODUCT OPTIONS AND SUBSTITUTIONS 10
3.11 CASH ALLOWANCES 11
3.12 WARRANTY 11
3.13 TAXES 12
3.14 PERMITS, FEES, AND NOTICES 12
3.15 CONSTRUCTION SCHEDULES 12
3.16 DOCUMENTS AND SAMPLES AT THE SITE 12
3.17 MANUFACTURER'S SPECIFICATIONS 12
3.18 SHOP DRAWINGS, PRODUCT DATA, AND SAMPLES 13
3.19 CULTURAL RESOURCES AND ENDANGERED SPECIES 13
3.20 CUTTING AND PATCHING 14
3.21 CLEANING 14
3.22 SANITATION 14
3.23 ACCESS TO WORK AND TO INFORMATION 14
3.24 TRADE SECRETS 14
3.25 INDEMNIFICATION 14
3.26 RELEASE AND INDEMNIFICATION – PATENT, COPYRIGHT, TRADEMARK, AND TRADE SECRET INFRINGEMENT 15
3.27 INDEMNIFICATION PROCEDURES 15
3.28 CONTRACTOR DEBT 15

ARTICLE 4 - ADMINISTRATION OF THE CONTRACT 16

4.1 CONTRACT ADMINISTRATION 16
4.2 COMMUNICATIONS IN ADMINISTRATION OF THE CONTRACT 17
4.3 CLAIMS AND DISPUTES 17
4.4 RESOLUTION OF CLAIMS AND DISPUTES 18
4.5 CONDITION PRECEDENT TO SUIT; WAIVER OF ATTORNEYFEES AND INTEREST .....
4.6 INTERIM PAYMENT WAIVER & RELEASE 18

ARTICLE 5 - SUBCONTRACTORS AND SUPPLIERS 19

5.1 AWARD OF SUBCONTRACTS OTHER CONTRACTS FOR PORTIONS OF THE WORK 19
5.2 CONTRACTOR RESPONSIBILITY FOR SUBCONTRACTORS 19

ARTICLE 6 - CONSTRUCTION BY THE CITY OR BY SEPARATE CONTRACTORS 19

6.1 THE CITY'S RIGHT TO PERFORM CONSTRUCTION AND TO AWARD SEPARATE CONTRACTS 19
6.2 COORDINATION 19
6.3 MUTUAL RESPONSIBILITY 20
6.4 THE CITY'S RIGHT TO CLEAN UP 20

ARTICLE 7 - CHANGES IN THE WORK 20

7.1 CHANGES 20
7.2 WORK CHANGE DIRECTIVES 20
7.3 ADJUSTMENTS IN CONTRACT PRICE 21
7.4 MINOR CHANGES IN THE WORK 22

ARTICLE 8 - TIME 22

8.1 PROGRESS AND COMPLETION 22
8.2 DELAYS AND EXTENSIONS OF TIME 22

ARTICLE 9 - PAYMENTS AND COMPLETION 23

9.1 UNIT PRICE WORK 23
9.2 ESTIMATES FOR PAYMENT, UNIT PRICE WORK 23
9.3 STIPULATED PRICE WORK 24
9.4 APPLICATIONS FOR PAYMENT, STIPULATED PRICE WORK 24
9.5 CERTIFICATES FOR PAYMENT 24
9.6 COMPUTATIONS OF CERTIFICATES FOR PAYMENT 24
9.7 DECISIONS TO WITHHOLD CERTIFICATION 24
9.8 PROGRESS PAYMENTS 25
9.9 DATE OF SUBSTANTIAL COMPLETION 25
9.10 PARTIAL OCCUPANCY OR USE 26
9.11 FINAL COMPLETION AND FINAL PAYMENT 26

9.12 LIQUIDATED DAMAGES..... 27

ARTICLE 10 - SAFETY PRECAUTIONS..... 27

10.1 SAFETY PROGRAMS 27
10.2 POLLUTANTS AND POLLUTANT FACILITIES..... 27
10.3 SAFETY OF THE ENVIRONMENT, PERSONS, AND PROPERTY 28
10.4 EMERGENCIES..... 28

ARTICLE 11 - INSURANCE AND BONDS 28

11.1 GENERAL INSURANCE REQUIREMENTS 28
11.2 INSURANCE TO BE PROVIDED BY CONTRACTOR..... 29
11.3 PROOF OF INSURANCE 32
11.4 PERFORMANCE AND PAYMENT BONDS..... 33
11.5 MAINTENANCE BONDS 33
11.6 SURETY 33
11.7 DELIVERY OF BONDS..... 34

ARTICLE 12 - UNCOVERING AND CORRECTION OF THE WORK..... 34

12.1 UNCOVERING OF THE WORK 34
12.2 CORRECTION OF THE WORK..... 34
12.3 ACCEPTANCE OF NONCONFORMING WORK.... 34

ARTICLE 13 - MISCELLANEOUS PROVISIONS..... 34

13.1 GOVERNING LAWS..... 34
13.2 SUCCESSORS..... 35
13.3 BUSINESS STRUCTURE AND ASSIGNMENTS ... 35
13.4 WRITTEN NOTICE 35
13.5 RIGHTS AND REMEDIES 35
13.6 TESTS AND INSPECTIONS..... 35
13.7 INTEREST 35
13.8 PARTIES IN INTEREST 36
13.9 ENTIRE CONTRACT 36
13.10 WRITTEN AMENDMENT..... 36
13.11 COMPLIANCE WITH LAWS..... 36
13.12 SEVERABILITY..... 35

ARTICLE 14 - TERMINATION OR SUSPENSION OF THE CONTRACT 36

14.1 TERMINATION BY THE CITY FOR CAUSE 36
14.2 TERMINATION BY THE CITY FOR CONVENIENCE 37
14.3 SUSPENSION BY THE CITY FOR CONVENIENCE 37
14.4 TERMINATION BY CONTRACTOR 38

ARTICLE 1 - GENERAL PROVISIONS

1.1 DEFINITIONS

1.1.1 Agreement: Document signed by the Parties and binding the Parties, containing the name of Contractor, title and location of the Project, Original Contract Time, Original Contract Price, enumeration of documents included in the Contract, and other provisions.

1.1.2 Bonds: Performance Bond, Payment Bond, Maintenance Bond, and other Surety instruments executed by Surety. When in singular form, refers to individual instrument.

1.1.3 Business Enterprise: Any business entity registered in a program authorized by 49 C.F.R. § 26 (where applicable) or City Code of Ordinances, Chapter 15, Article II, relating to Equal Opportunity Employment and taking affirmative action to ensure that applicants are employed and employees are treated without regard to race, religion, color, sex, national origin, or age. The term "Business Enterprise" may include any Disadvantaged Business Enterprise ("DBE"), Minority Business Enterprise ("MBE"), Woman Business Enterprise ("WBE"), Small Business Enterprise ("SBE"), Person with Disability Enterprise ("PDBE"), and any Historically Underutilized Business ("HUB").

1.1.4 Business Enterprise Policy: Contract documents and applicable policies relating to Business Enterprises and authorized under 49 C.F.R. § 26 or City Code of Ordinances, Chapter 15, Article II.

1.1.5 Cash Allowance: An estimated sum of money to be used only for a limited class of expenditures such as utility relocation costs, fees for special licenses or permits, or other "pass-through" costs that would be the same for any contractor. Cash Allowances may not be used to purchase goods or services that are not specified in the Contract. The unspecified items must be purchased according to the terms of Article 7.

1.1.6 Change Order: Written instrument prepared by the City and signed by City Engineer and Contractor, specifying the following:

.1 a change in the Work;
.2 a change in Contract Price, if any; and
.3 a change in Contract Time, if any.

The value of a Change Order is the net amount after offsetting all deductions against all additions effected by the Change Order.

1.1.7 City: The City of Houston, a home rule municipality located principally within Harris County, Texas, including its successors and its authorized representatives.

1.1.8 City Engineer: The City Engineer, or the City employee representing the City Engineer, designated in the Agreement and authorized to represent the City, or successors.

1.1.9 Claim: Written demand or written assertion by one Party seeking adjustment of the Contract, payment of money, extension of time, or other relief under the Contract and includes, but is not limited to, claims for materials, labor, equipment, delay, changes, adjustments, substitutions, fees and third party claims. The Party making the Claim has the responsibility to substantiate the Claim.

1.1.10 Conditions of the Contract: General Conditions and Supplementary Conditions.

1.1.11 Construction Manager: Person or firm under contract with the City as its authorized representative to oversee and administer construction of the Work, and who may perform the role of Project Manager and Inspector, as designated by City Engineer in writing.

1.1.12 Contract: The Agreement; documents enumerated in and incorporated into the Agreement, Modifications, and amendments.

1.1.13 Contract Price: The monetary amount stated in the Agreement adjusted by Change Order, and increases or decreases in Unit Price Quantities, if any.

1.1.14 Contract Time: The number of days stated in the Agreement to substantially complete the Work, plus days authorized by Change Order.

1.1.15 Contractor: Person or firm identified as such in the Agreement including its successors and its authorized representatives.

1.1.16 Date of Commencement of the Work: Date established in Notice to Proceed on which Contract Time will commence. This date will not be changed by failure of Contractor, or persons or entities for whom Contractor is responsible, to act.

1.1.17 Date of Substantial Completion: Date that construction, or portion thereof designated by City Engineer, is certified by City Engineer to be substantially complete.

1.1.18 Design Consultant: Person or firm, under contract with the City, to provide professional services during construction and its authorized representatives. If a Design Consultant is not employed for services during construction, Project Manager will perform duties of Design Consultant designated in the Contract in addition to usual duties of Project Manager.

1.1.19 Drawings: Graphic and pictorial portions of the Contract that define the character and scope of the Work.

1.1.20 Extra Unit Price: Unit Prices, which may be required for completion of the Work. These Unit Prices and Unit Price Quantities are in the Contract and are included in Original Contract Price.

1.1.21 Furnish: To supply, pay for, deliver to the site, and unload.

1.1.22 General Requirements: The sections of Division 01 Specifications that specify administrative and procedural requirements and temporary facilities required for the Work.

1.1.23 Inspector: City's employee or agent authorized to assist with inspection of the Work.

1.1.24 Install: Unpack, assemble, erect, place, anchor, apply, work to dimension, finish, cure, clean, protect, and similar operations.

1.1.25 Legal Holiday: Day established by the City Council as a holiday.

1.1.26 Major Unit Price Work: An individual Unit Price item,

.1 whose value is greater than five percent of Original Contract Price,

.2 whose value becomes greater than five percent of Original Contract Price as the result of an increase in quantity, or

.3 whose value is $100,000, whichever is least.

1.1.27 Mayor's Office of Business Opportunity: any reference to, or use of, the "Office of Affirmative Action" shall mean the Mayor's Office of Business Opportunity, or any such future name to which it is changed.

1.1.28 Minor Change in the Work: A written change in the Work, ordered by City Engineer, that does not change Contract Price or Contract Time, and that is consistent with the general scope of the Contract.

1.1.29 Modification: Change Order, Work Change Directive, or Minor Change in the Work.

1.1.30 Notice of Noncompliance: A written notice by City Engineer to Contractor regarding defective or nonconforming work that does not meet the Contract requirements, and that establishes a time by which Contractor shall correct the defective or nonconforming work.

1.1.31 Notice to Proceed: A written notice by City Engineer to Contractor establishing Date of Commencement of the Work.

1.1.32 Original Contract Price: The monetary amount originally stated in the Agreement.

1.1.33 Parties: Contractor and the City. When in singular form, refers to Contractor or the City.

1.1.34 Pollutant: Any materials subject to the Texas Solid Waste Disposal Act.

1.1.35 Pollutant Facility: Any facility regulated by the State of Texas to protect the health and environment from contamination by Pollutants, including without limitation, landfills, oil and gas production and storage facilities, wastewater facilities, waste injection wells, and storage tanks (including drums).

1.1.36 Product: Materials, equipment, or systems incorporated into the Work or to be incorporated into the Work.

1.1.37 Product Data: Illustrations, standard schedules, performance charts, instructions, brochures, diagrams, and other information furnished by Contractor to illustrate a Product.

1.1.38 Project: Total construction, of which the Work performed under the Contract may be the whole or a part, and which may include construction by the City or by separate contractors.

1.1.39 Project Manager: City Engineer's authorized representative for administration of the Work. Titles used within the City's departments may be different than those used in this definition.

1.1.40 Provide: Furnish and Install, complete, ready for intended use.

1.1.41 Samples: Physical examples that illustrate Products, or workmanship, and establish standards by which the Work is judged.

1.1.42 Shop Drawings: Drawings, diagrams, schedules, and other data specially prepared for the Work by Contractor, Subcontractor or Supplier, to illustrate a portion of the Work.

1.1.43 Specifications: Divisions 01 through 16 of the documents that are incorporated into the Agreement, consisting of written General Requirements and requirements for Products, standards, and workmanship for the Work, and performance of related services.

1.1.44 Stipulated Price: Single lump sum amount stated in the Contract for completion of the Work, or for designated portion of the Work.

1.1.45 Subcontractor: Person or firm that has direct or indirect contract with Contractor or with another Subcontractor to perform a portion of the Work and its authorized representatives.

1.1.46 Superintendent: Employee of Contractor having authority and responsibility to act for and represent Contractor.

1.1.47 Supplementary Conditions: Part of Conditions of the Contract that amends or supplements General Conditions.

1.1.48 Supplier: Manufacturer, distributor, materialman, or vendor having a direct agreement with Contractor or Subcontractor for Products, or services and its authorized representatives.

1.1.49 Surety: Corporate entity that is bound by one or more Bonds, and is responsible for completion of the Work, including the correction period, and for payment of debts incurred in fulfilling the Contract. Surety shall include co-surety or reinsurer, as applicable.

1.1.50 Underground Facilities: Pipes, conduits, ducts, cables, wires, manholes, vaults, tanks, tunnels, or other such facilities or attachments and encasements containing such facilities that exist below ground level.

1.1.51 Unit Price: An amount stated in the Contract for an individual, measurable item of work, which, when multiplied by actual quantity incorporated into the Work, amounts to full compensation for completion of the item, including work incidental to it.

1.1.52 Unit Price Quantities: Quantities indicated in the Contract that are approximations made by the City for contracting purposes.

1.1.53 Work: Entire construction required by the Contract, including all labor, Products, and services provided by Contractor to fulfill Contractor's obligations. The Work may constitute the whole or a portion of the Project.

1.1.54 Work Change Directive: A written change in the Work, ordered by City Engineer, that is within the general scope of the Contract and consisting of additions, deletions, or other revisions. A Work Change Directive will state proposed basis for adjustment, if any, in Contract Price or Contract Time, or both.

1.2 EXECUTION, CORRELATION, AND INTENT

1.2.1 Execution of the Contract by Contractor is conclusive that Contractor has visited the Work site, become familiar with local conditions under which the Work will be performed, and fully informed itself as to conditions and matters which can affect the Work or costs. Contractor further agrees that it has carefully correlated personal observations with requirements of the Contract.

1.2.2 The Contract and Modifications have been read and carefully considered by Contractor, who understands and agrees to their sufficiency for the Work. The Contract may not be more strongly construed against the City than against Contractor and Surety.

1.2.3 Contractor shall include all items necessary for proper execution and completion of the Work.

1.2.4 Reference to standard specifications, manuals, or codes of a technical society, organization, or association, or to laws or regulations of a governmental authority, whether specific or implied, mean the latest edition in effect as of date of receipt of bids, except as may be otherwise specifically stated in the Contract.

1.2.5 No provision of any referenced standard, specification, or manual changes the duties and responsibilities of the City, City Engineer, Contractor, or Design Consultant from those set forth in the Contract. Nor do these provisions assign to Design Consultant any duty or authority to supervise or direct performance of the Work or any duty or

authority to undertake any actions contrary to provisions of the Contract.

1.2.6 Organization of Specifications into divisions, sections, and articles and arrangement of Drawings does not control Contractor in dividing the Work among Subcontractors or in establishing the extent of work to be performed by any trade.

1.2.7 Unless otherwise defined in the Contract, words which have well-known construction industry technical meanings are used in the Contract in accordance with these recognized meanings.

1.3 OWNERSHIP AND USE OF DOCUMENTS

1.3.1 Drawings, Specifications, and other documents prepared by the City or by Design Consultant are instruments of service through which the Work to be executed by Contractor is described. Contractor may retain one Contract record set.

1.3.2 Neither Contractor, Subcontractor, nor Supplier will own or claim a copyright to documents contained in the Contract or any part of the Contract.

1.3.3 Documents contained in the Contract, prepared by the City or by Design Consultant, and copies furnished to Contractor, are for use solely with respect to the Work. They may not be used by Contractor, Subcontractor or Supplier on other projects or for additions to the Work, outside the scope of the Work, without the specific written consent of City Engineer, and Design Consultant, when applicable.

1.3.4 Contractor, Subcontractors, and Suppliers are granted a limited license to use and reproduce applicable portions of the Contract appropriate to and for use in execution of their work under the Contract.

1.4 *INTERPRETATION*

1.4.1 Specifications are written in an imperative streamlined form and are directed to Contractor, unless noted otherwise. When written in this form, words "shall be" are included by inference where a colon (:) is used within sentences or phrases.

1.4.2 In the interest of brevity, the Contract frequently omits modifying words such as "all" and "any" and articles such as "the" and "an", but an absent modifier or article is not intended to affect interpretation of a statement.

ARTICLE 2 - THE CITY

2.1 *LIMITATIONS OF THE CITY'S OFFICERS AND EMPLOYEES*

2.1.1 No officer or employee of the City may authorize Contractor to perform an act or work contrary to the Contract, except as otherwise provided in the Contract.

2.2 *DUTIES OF THE CITY*

2.2.1 If a building permit is required, the City will process an application for, and Contractor shall purchase the building permit before Date of Commencement of the Work.

2.2.2 The City will make available to Contractor a reproducible set of Drawings. Additional copies will be furnished, on Contractor's request, at the cost of reproduction.

2.2.3 When necessary for performance of the Work, the City will provide surveys describing physical characteristics, legal limitations, legal description of site, and horizontal and vertical control adequate to lay out the Work.

2.2.4 Information or services that the City is required to provide under the Contract will be provided by the City with reasonable promptness to avoid delay in orderly progress of the Work.

2.2.5 The Contract imposes no implied duty on the City. The City does not warrant any plans or specifications associated with the Contract.

2.2.6 Except as expressly stated in this Article, the City owes no duty to the Contractor or any subcontractor.

2.3 *AVAILABILITY OF LAND AND USE OF SITE*

2.3.1 The City will furnish, as indicated in the Contract, rights-of-way, land on which the Work is to be performed, and other land designated in the Contract for use by Contractor unless otherwise provided in the Contract.

2.3.2 Contractor shall confine operations at site to those areas permitted by law, ordinances, permits, and the Contract, and may not unreasonably encumber site with materials or equipment.

2.3.3 In addition to land provided by the City under Section 2.3, Contractor shall provide all land and access to land that may be required for use by Contractor for temporary construction facilities or for storage of materials and equipment, and shall indemnify the City during its use of the land as stated in Section 3.25.

2.4 *THE CITY'S RIGHT TO STOP THE WORK*

2.4.1 If Contractor fails to carry out the Work in accordance with the Contract, or fails to correct work which is not in accordance with requirements of the Contract as required in Sections 12.1 and 12.2, the City may, by Notice of Noncompliance, order Contractor to stop the Work or any portion of the Work until the cause for the order has been eliminated. However, the right of the City to stop the Work will not give rise to a Claim for delay or to a duty on the part of the City to exercise this right for the benefit of Contractor or any other person or entity, except to the extent required by Section 6.2. If Contractor corrects the defective or nonconforming work within the time established in Notice of Noncompliance, City Engineer will give written notice to Contractor to resume performance of the Work.

2.5 *THE CITY'S RIGHT TO CARRY OUT WORK*

2.5.1 If Contractor fails to carry out work in accordance with the Contract, and fails within the period established in a Notice of Noncompliance to correct the nonconforming work, the City may, after expiration of the required period, correct the deficiencies without prejudice to other remedies the City may have, including rights of the City under Section 14.1.

2.5.1.1 When the City corrects deficiencies, City Engineer will issue an appropriate Change Order and deduct from payments then or thereafter due Contractor the cost of correcting the deficiencies, including compensation for Design Consultant's and Construction Manager's additional services and expenses made necessary by such default, neglect, or failure. This action by the City and amounts charged to Contractor are both subject to prior approval of City Engineer. If payments, then or thereafter due Contractor, are not sufficient to cover these amounts, Contractor shall pay the difference to the City.

2.5.2 Notwithstanding the City's right to carry out work, maintenance and protection of the Work remains Contractor's responsibility, as provided in the Contract.

ARTICLE 3 - CONTRACTOR

3.1 *RESPONSIBILITIES*

3.1.1 Contractor shall maintain office with agent in the greater City of Houston area during the Contractor's performance under the Contract. Contractor shall file its street address with City Engineer.

3.1.2 Contractor and Contractor's employees shall not give or lend money or anything of value to an officer or employee of the City. Should this Paragraph 3.1.2 be violated, City Engineer may terminate the Contract under Section 14.1.

3.2 *REVIEW OF CONTRACT AND FIELD CONDITIONS BY CONTRACTOR*

3.2.1 Contractor shall carefully study and compare documents contained in the Contract with each other and with information furnished by the City pursuant to Section 2.2 and shall immediately report, in writing, any errors, inconsistencies, or omissions to City Engineer. If work is affected, Contractor shall obtain a written interpretation or clarification from City Engineer before proceeding with the affected work. However, Contractor will not be liable to the City for failure to report an error, inconsistency, or omission in the Contract unless Contractor had actual knowledge or should have had knowledge of the error, inconsistency, or omission.

3.2.2 Contractor shall take field measurements and verify field conditions, and shall carefully compare the conditions and other information known to Contractor with the Contract, before commencing activities. Contractor shall immediately report, in writing, to City Engineer for interpretation or clarification of discrepancies, inconsistencies, or omissions discovered during this process.

3.2.3 Contractor shall make a reasonable attempt to understand the Contract before requesting interpretation from City Engineer.

3.3 *SUPERVISION AND CONSTRUCTION PROCEDURES*

3.3.1 Contractor shall supervise, direct, and inspect the Work competently and efficiently, devoting the attention and applying the skills and

expertise as necessary to perform the Work in accordance with the Contract. Contractor is solely responsible and has control over construction means, methods, techniques, sequences, and procedures of construction; for safety precautions and programs in connection with the Work; and for coordinating all work under the Contract.

3.3.2 Regardless of observations or inspections by the City or City's consultants, Contractor shall perform and complete the Work in accordance with the Contract and submittals approved pursuant to Section 3.18. The City is not liable or responsible to Contractor or Surety for work performed by Contractor that is not in accordance with the Contract regardless of whether discovered during construction or after acceptance of the Work.

3.4 *SUPERINTENDENT*

3.4.1 Contractor shall employ a competent Superintendent and necessary assistants who shall be present at the site during performance of the Work. Communications given to Superintendent are binding on the Contractor.

3.4.2 Contractor shall notify City Engineer in writing of its intent to replace the Superintendent. Contractor may not replace the Superintendent if City Engineer makes a reasonable objection in writing.

3.5 *LABOR*

3.5.1 Contractor shall provide competent, qualified personnel to survey and lay out the Work and perform construction as required by the Contract. The City may, by written notice, require Contractor to remove from the Work any employee of Contractor or Subcontractors to whom City Engineer makes reasonable objection.

3.5.2 Contractor shall comply with the applicable Business Enterprise Policy set out in this Agreement and in the Supplementary Conditions, as set out in Chapter 15, Article V of the City of Houston Code of Ordinances.

3.5.3 When Original Contract Price is greater than $1,000,000, Contractor shall make Good Faith Efforts to award subcontracts or supply agreements in at least the percentages set out in the Supplementary Conditions for Business Enterprise Policy. Contractor acknowledges that it has reviewed the requirements for Good Faith Efforts on file with the City's Office of Business Opportunity and shall comply with them.

3.5.3.1 Contractor shall require written subcontracts with Business Enterprises and shall submit all disputes with Business Enterprises to voluntary mediation. Business Enterprise subcontracts complying with City Code of Ordinances Chapter 15, Article II must contain the terms set out in Subparagraph 3.5.3.2. If Contractor is an individual person, as distinguished from a corporation, partnership, or other legal entity, and the amount of the subcontract is $50,000 or less, the subcontract must also be signed by the attorneys of the respective parties.

3.5.3.2 Contractor shall ensure that subcontracts with Business Enterprise firms are clearly labeled **"THIS CONTRACT MAY BE SUBJECT TO MEDIATION ACCORDING TO THE TEXAS ALTERNATIVE DISPUTE RESOLUTION ACT"** and contain the following terms:

.1 (Business Enterprise) may not delegate or subcontract more than 50 percent of work under this subcontract to any other subcontractor without the express written consent of the City's OBO Director (the "Director").

.2 (Business Enterprise) shall permit representatives of the City of Houston, at all reasonable times, to perform (1) audits of the books and records of the Subcontractors and Suppliers, and (2) inspections of all places where work is to be undertaken in connection with this subcontract. (Business Enterprise) shall keep the books and records available for this purpose for at least four years after the end of its performance under this subcontract. Nothing in this provision shall affect the time for bringing a cause of action nor the applicable statute of limitations.

.3 Within five business days of execution of this subcontract, Contractor and (Business Enterprise) shall designate in writing to the Director an agent for receiving any notice required or permitted to be given pursuant to Chapter 15 of the Houston City Code of Ordinances, along with the street and mailing address and phone number of the agent.

3.5.4 The requirements and terms of the City of Houston Pay or Play Program, as set out in Executive Order 1-7 and Ordinance 2007-0534, are incorporated into the Contract for all purposes. Contractor shall comply with the terms and conditions of the Pay or Play Program as they are set out at the time of City Council approval of this

agreement. IF CONTRACTOR DOES NOT PAY IN ACCORDANCE WITH THE PAY OR PLAY PROGRAM WITHIN 30 DAYS OF THE DATE CITY ENGINEEER SENDS CONTRACTOR WRITTEN NOTIFICATION, CITY CONTROLLER MAY DEDUCT FUNDS UP TO THE AMOUNT OWED FROM ANY PAYMENTS OWED TO CONTRACTOR UNDER THIS AGREEMENT, AND CONTRACTOR WAIVES ANY RECOURSE.

3.6 *PREVAILING WAGE RATES*

3.6.1 Contractor shall comply with governing statutes providing for labor classification of wage scales for each craft or type of laborer, worker, or mechanic.

3.6.2 Prevailing wage rates applicable to the Work may be one or a combination of the following wage rates identified in Division 00:

- .1 Federal Wage Rate General Decisions
  - .1 Highway Rates
  - .2 Building Rates
  - .3 Heavy Construction Rates
  - .4 Residential Rates
- .2 City Prevailing Wage Rates
  - .1 Building Construction Rates
  - .2 Engineering Construction Rates
  - .3 Asbestos Worker Rates

3.6.3 Each week Contractor shall submit to the City's Mayor's Office of Business Opportunity certified copies of payrolls showing classifications and wages paid by Contractor, Subcontractors, and Suppliers for each employee under the Contract, for any day included in the Contract.

3.7 *LABOR CONDITIONS*

3.7.1 In the event of labor disputes affecting Contractor or Contractor's employees, Contractor shall utilize all possible means to resolve disputes in order that the Work not be delayed to any extent. These means will include seeking injunctive relief and filing unfair labor practice charges, and any other action available to Contractor.

3.7.2 When Contractor has knowledge that any actual or potential labor dispute is delaying or is threatening to delay timely performance of the Work, Contractor shall immediately notify City Engineer in writing. No Claims will be accepted by City Engineer for costs incurred as a result of jurisdictional or labor disputes.

3.8 *DRUG DETECTION AND DETERRENCE*

3.8.1 It is the policy of the City to achieve a drug-free work force and to provide a workplace that is free from the use of illegal drugs and alcohol. It is also the policy of the City that manufacture, distribution, dispensation, possession, sale, or use of illegal drugs or alcohol by contractors while on the City's premises is prohibited. By executing the Contract, Contractor represents and certifies that it meets and will comply with all requirements and procedures set forth in the Mayor's Policy on Drug Detection and Deterrence, City Council Motion No. 92-1971 ("Mayor's Policy") and the Mayor's Drug Detection and Deterrence Procedures for Contractors, Executive Order No. 1-31, (Revised) ("Executive Order"). Mayor's Policy is on file in the office of the City Secretary. Copies of Executive Order may be obtained at the location specified in the Advertisement for Bids.

3.8.1.1 The Executive Order applies to the City's contracts for labor or services except the following:

- .1 contracts authorized by Emergency Purchase Orders,
- .2 contracts in which imposition of requirements of the Executive Order would exclude all potential bidders or proposers, or would eliminate meaningful competition for the Contract,
- .3 contracts with companies that have fewer than 15 employees during any 20-week period during a calendar year and no safety impact positions,
- .4 contracts with non-profit organizations providing services at no cost or reduced cost to the public, and
- .5 contracts with federal, state, or local governmental entities.

3.8.1.2 Prior to execution of the Contract, Contractor shall have filed with the City:

- .1 a Drug Policy Compliance Agreement form (Attachment "A" to the Executive Order), and
- .2 a copy of Contractor's drug free workplace policy, and
- .3 a written designation of all safety impact positions, if applicable, or a Contractor's Certification of a No Safety Impact Positions form (Attachment "C" to the Executive Order).

3.8.1.3 Every six months during performance of the Contract and upon completion of the Contract, Contractor shall file a Drug Policy Compliance Declaration form (Attachment "B" to the Executive Order). The Contractor shall submit the Drug Policy Compliance Declaration within 30 days of expiration of each six-month period of performance and within 30 days of completion of the Contract. The first six-month period shall begin on Date of Commencement of the Work.

3.8.1.4 Contractor shall have a continuing obligation to file updated designation of safety impact positions when additional safety impact positions are added to Contractor's employee workforce during performance of the Work.

3.8.1.5 Contractor shall require its Subcontractors and Suppliers to comply with the Mayor's Policy and Executive Order. Contractor is responsible for securing and maintaining required documents from Subcontractors and Suppliers for the City inspection throughout the term of the Contract.

3.8.1.6 Failure of Contractor to comply with requirements will be a material breach of the Contract entitling the City to terminate in accordance with Section 14.1.

3.9 *MATERIALS & EQUIPMENT*

3.9.1 Unless otherwise provided in the Contract, Contractor shall provide and assume full responsibility for Products, labor, transportation, construction equipment and machinery, tools, appliances, fuel, power, light, heat, telephone, water, sanitary facilities, transportation, temporary facilities, supplies, and other facilities and incidentals necessary for Furnishing, performing, testing, starting-up, and completing the Work.

3.9.1.1 Contractor, Subcontractors, and Suppliers shall use Ultra Low Sulfur Diesel Fuel in all diesel operating vehicles and motorized equipment utilized in performing the Work. Ultra Low Sulfur Diesel Fuel is defined as diesel fuel having 15 ppm or the applicable standard set by state or federal law or rules and regulations of the Texas Commission on Environmental Quality, or the Environmental Protection Agency, whichever is less in sulfur content. Off-road Ultra Low Sulfur Diesel Fuel may be used in lieu of on-road Ultra Low Sulfur Diesel Fuel. Contractor shall provide, upon request by City Engineer, proof that Contractor, Subcontractors, and Suppliers are using Ultra Low Sulfur Diesel Fuel.

3.9.2 Contractor shall provide Products that are:

.1 new, unless otherwise required or permitted by the Contract, and
.2 of specified quality.

If required by City Engineer, Contractor shall furnish satisfactory evidence, including reports of required tests, as to kind and quality of Products.

3.9.3 Contractor shall store Products in a safe, neat, compact, and protected manner. Contractor shall also store Products delivered during the work, along the right-of-way:

.1 so as to cause the least inconvenience to property owners, tenants, and general public; and
.2 so as not to block access to, or be closer than, three feet to any fire hydrant.

Contractor shall protect trees, lawns, walks, drives, streets, and other improvements that are to remain, from damage. If private or public property is damaged by Contractor, Contractor shall, at its sole expense, restore the damaged property to at least its original condition.

3.9.3.1 Contractor shall obtain City Engineer's approval for storage areas used for Products for which payment has been requested under Paragraph 9.6.1. Contractor shall provide the City access to the storage areas for inspection purposes. Products, once paid for by the City, become the property of the City and may not be removed from place of storage, without City Engineer's written permission except for a movement to the site. Contractor's Installation Floater, required under Section 11.2, shall cover all perils, including loss or damage to Products during storage, loading, unloading, and transit to the site.

3.10 *PRODUCT OPTIONS AND SUBSTITUTIONS*

3.10.1 For Products specified by reference standards or by description only, Contractor may provide any Product meeting those standards or description.

3.10.2 For Products specified by naming one or more manufacturers with provision for substitutions or equal, Contractor may submit a request for substitution for any manufacturer not named.

3.10.3 City Engineer will consider requests for substitutions only within the first 15 percent of Contract Time, or first 90 days after date of Notice to Proceed, whichever is less.

3.10.4 Contractor shall document each request for substitution with complete data

substantiating compliance of proposed substitution with the Contract.

3.10.5 A request for substitution constitutes a representation that Contractor:

.1 has investigated the proposed Product and determined that it meets or exceeds the quality level of the specified Product;

.2 shall provide the same warranty for the substitution as for the specified Product;

.3 shall coordinate installation of the proposed substitution and make changes to other work which may be required for the Work to be completed, with no additional cost or increase in time to the City;

.4 confirms that cost data is complete and includes all related costs under the Contract;

.5 waives Claim for additional costs or time extensions that may subsequently become apparent; and

.6 shall provide review or redesign services by a design consultant with appropriate professional license and shall obtain re-approval and permits from authorities.

3.10.6 City Engineer will not consider and will not approve substitutions when:

.1 they are indicated or implied on Shop Drawing or Product Data submittals without separate written request; or

.2 acceptance will require revision to the Contract.

3.10.7 City Engineer may reject requests for substitution, and his decision will be final and binding on the Parties.

3.11 *CASH ALLOWANCES*

3.11.1 Contract Price includes Cash Allowances as identified in the Contract.

3.11.2 The City will pay the actual costs of Cash Allowance item exclusive of profit, overhead or administrative costs. If actual costs exceed the Cash Allowance, City Engineer must approve a Change Order for the additional costs.

3.12 *WARRANTY*

3.12.1 Contractor warrants to the City that Products furnished under the Contract are:

.1 free of defects in title;

.2 of good quality; and

.3 new, unless otherwise required or permitted by the Contract.

If required by the City Engineer, Contractor shall furnish satisfactory evidence as to kind, quality and title of Products, and that Products conform to requirements of the Contract.

3.12.2 In the event of a defect in a Product, either during construction or warranty period, Contractor shall take appropriate action with manufacturer of Product to assure correction or replacement of defective Product with minimum delay.

3.12.3 Contractor warrants that the Work is free of defects not inherent in the quality required or permitted, and that the Work does conform with the requirements of the Contract. Contractor further warrants that the Work has been performed in a thorough and workmanlike manner.

3.12.4 Contractor warrants that the Work is free of concentrations on polychlorinated biphenyl (PCB) and other substances defined as hazardous by the Comprehensive Environmental Response Compensation and Liability Act (CERCLA) or any other applicable law or regulation.

3.12.5 Work not conforming to requirements of Section 3.12, including substitutions not properly approved and authorized, may be considered nonconforming work.

3.12.6 Contractor's warranty excludes remedy for damage or defect caused by:

.1 improper or insufficient maintenance by the City;

.2 normal wear and tear under normal usage; or

.3 claim that hazardous material was incorporated into the Work, if that material was specified in the Contract.

3.12.7 Contractor warrants that title to all work covered by Contractor's request for payment passes to the City upon incorporation into the Work or upon Contractor's receipt of payment, whichever occurs first. The Contractor further warrants that the title is free of all liens, claims, security interests or other interests ("Encumbrances"). If not, upon written demand from City Engineer, Contractor shall immediately take legal action necessary to remove Encumbrances.

3.13 *TAXES*

3.13.1 Contractor shall pay all sales, consumer, use, and similar taxes, which are in effect or scheduled to go into effect on or before bids are received, related to work provided by Contractor.

3.13.2 Contractor shall obtain, and require Subcontractors and Suppliers to obtain, necessary permits from the state and local taxing authorities to perform contractual obligations under the Contract, including sales tax permits.

3.13.3 The City is exempt from the Federal Transportation and Excise Tax. Contractor shall comply with federal regulations governing the exemptions.

3.13.4 Products incorporated into the Work are exempt from state sales tax according to provisions of the TEX. TAX CODE ANN. CH. 151, Subsection H.

3.14 *PERMITS, FEES, AND NOTICES*

3.14.1 Unless otherwise provided in the Contract, Contractor shall secure and pay for all construction permits, licenses, and inspections:

.1 necessary for proper execution and completion of the Work; and

.2 legally required at time bids are received.

3.15 *CONSTRUCTION SCHEDULES*

3.15.1 On receipt of Notice to Proceed, Contractor shall promptly prepare and submit construction schedule for the Work for City Engineer's review. The schedule must reflect the minimum time required to complete the Work not to exceed Contract Time.

3.15.2 Contractor shall give 24-hour written notice to City Engineer before commencing work or resuming work where work has been stopped. Contractor shall also give the same notice to inspectors.

3.15.3 Contractor shall incorporate milestones specified in Summary of Work Specification into the construction schedule. Contractor's failure to meet a milestone, as determined by City Engineer, may be considered a material breach of the Contract.

3.15.4 Each month, Contractor shall submit to City Engineer a copy of an updated construction schedule indicating actual progress, incorporating applicable changes, and indicating courses of action required to assure completion of the Work within Contract Time.

3.15.5 Contractor shall keep a current schedule of submittals that coordinates with the construction schedule, and shall submit the initial schedule of submittals to City Engineer for approval.

3.16 *DOCUMENTS AND SAMPLES AT THE SITE*

3.16.1 Contractor shall maintain at the site, and make available to City Engineer, one record copy of Drawings, Specifications, and Modifications. Contractor shall maintain the documents in good order and marked currently to record changes and selections made during construction. In addition, Contractor shall maintain at the site, approved Shop Drawings, Product Data, Samples, and similar submittals, which will be delivered to City Engineer prior to final inspection as required in Paragraph 9.11.4.

3.16.2 Contractor shall maintain all books, documents, papers, accounting records, and other relevant documentation pursuant to the Work and shall make the books, documents, papers, and accounting records available to representatives of the City for review and audits during the Contract term and for the greater of three years following Date of Substantial Completion or until all litigation or audits are fully resolved.

3.16.3 Contractor shall provide to City Attorney all documents and records that City Attorney deems necessary to assist in determining Contractor’s compliance with the Contract, with the exception of those documents made confidential by federal or state law or regulation.

3.17 *MANUFACTURER'S SPECIFICATIONS*

3.17.1 Contractor shall handle, store, and Install Products and perform all work in the manner required by Product manufacturer. Should the Contract and manufacturer's instructions conflict, Contractor shall report conflict to City Engineer for resolution prior to proceeding with the affected work.

3.17.2 References in the Contract to the manufacturer's specifications, directions, or recommendations, mean manufacturer's current published documents in effect as of date of receipt of bids, or in the case of a Modification, as of date of Modification.

3.18 SHOP DRAWINGS, PRODUCT DATA, AND SAMPLES

3.18.1 Shop Drawings, Product Data, and Samples are not part of the Contract. The purpose of Contractor submittals is to demonstrate, for those portions of the Work for which submittals are required, the way Contractor proposes to conform to information given and design concept expressed in the Contract.

3.18.2 Contractor shall submit to Project Manager for review the Shop Drawings, Product Data, and Samples, which are required by the Contract. Review by Project Manager is subject to limitations of Paragraph 4.1.4. Contractor shall transmit the submittals to the Project Manager with reasonable promptness and in a sequence, so as to cause no delay in the Work or in activities of the City or of separate contractors. Contractor shall transmit submittals in time to allow a minimum of 30 days for Project Manager's review prior to date Contractor needs reviewed submittals returned. This time may be shortened for a particular job requirement if approved by Project Manager in advance of submittal.

3.18.3 Contractor shall certify that the content of submittals conforms to the Contract without exception by affixing Contractor's approval stamp and signature. By certifying and submitting Shop Drawings, Product Data, and Samples, Contractor represents, and Contractor's stamp of approval shall state, that Contractor has determined and verified materials, quantities, field measurements, and field construction criteria related to the submittal, and has checked and coordinated information contained within the submittals with requirements of the Contract.

3.18.4 Contractor may not perform any work requiring submittal and review of Shop Drawings, Product Data, or Samples until the submittal has been returned with appropriate review decision by the Project Manager. Contractor shall perform work in accordance with the review.

3.18.5 If Contractor performs any work requiring submittals prior to review and acceptance of the submittals by Project Manager, such work is at Contractor's risk and the City is not obligated to accept work if the submittals are later found to be unacceptable.

3.18.6 If, in the opinion of Project Manager, the submittals are incomplete, or demonstrate an inadequate understanding of the Work or lack of review by the Contractor, then submittals may be returned to the Contractor for correction and resubmittal.

3.18.7 Contractor shall direct specific attention in writing and on the resubmitted Shop Drawings, Product Data, or Samples to any additional proposed revisions, other than those revisions requested by Project Manager on previous submittals.

3.18.8 Contractor is not relieved of responsibility for deviations from requirements of the Contract by Project Manager's review of Shop Drawings, Product Data, or Samples unless Contractor has specifically informed Project Manager in writing of the deviation at the time of the submittal, and Project Manager has given written approval of the deviation.

3.18.9 When professional certification of performance criteria of Products is required by the Contract, the City may rely upon accuracy and completeness of the calculations and certifications.

3.18.10 For Product colors or textures to be selected by the City, Contractor shall submit all samples together to allow preparation of a complete selection schedule.

3.18.11 Contractor shall submit informational submittals, on which Project Manager is not expected to take responsive action, as required by the Contract.

3.18.12 Submittals made by Contractor which are not required by the Contract may be returned to Contractor without action.

3.19 *CULTURAL RESOURCES AND ENDANGERED SPECIES*

3.19.1 Contractor may not remove or disturb, or cause to be removed or disturbed, any historical, archaeological, architectural, or other cultural artifacts, relics, vestiges, remains, or objects of antiquity. If Contractor discovers one of these items, Contractor shall immediately notify City Engineer and further comply with the requirements of 13 Tex. Admin. Code Chs. 25 and 26 (2002), or successor regulation. Contractor shall protect site and cultural resources from further disturbance until professional examination can be made or until clearance to proceed is authorized in writing by City Engineer.

3.19.2 Should either threatened or endangered plant or animal species be encountered,

Contractor shall cease work immediately in the area of encounter and notify City Engineer.

3.20 *CUTTING AND PATCHING*

3.20.1 Contractor is responsible for necessary cutting, fitting, and patching to accomplish the Work and shall suitably support, anchor, attach, match, and trim or seal materials to work of other contractors. Contractor shall coordinate the Work with work of other contractors to minimize conflicts, as provided in Article 6.

3.20.2 Contractor may not endanger work by cutting, digging, or other action, and may not cut or alter work of other contractors except by written consent of City Engineer and affected contractor.

3.21 *CLEANING*

3.21.1 Contractor shall perform daily cleanup of all dirt, debris, scrap materials and other disposable items resulting from Contractor's operations, whether on-site or off-site. Unless otherwise authorized in writing by City Engineer, Contractor shall keep all streets, access streets, driveways, areas of public access, walkways, and other designated areas clean and open at all times.

3.21.2 Failure of Contractor to maintain a clean site, including access streets, is the basis for City Engineer to issue a Notice of Noncompliance. Should compliance not be attained within the time period in the Notice of Noncompliance, City Engineer may authorize necessary cleanup to be performed by others and the cost of the cleanup will be deducted from monies due Contractor.

Contractor shall legally dispose off-site, all waste materials and other excess materials resulting from Contractor's operations.

3.22 *SANITATION*

3.22.1 Contractor shall provide and maintain sanitary facilities at site for use of all construction forces under the Contract. Newly-constructed or existing sanitary facilities may not be used by Contractor.

3.23 *ACCESS TO WORK AND TO INFORMATION*

3.23.1 Contractor shall provide the City, Design Consultant, testing laboratories, and governmental agencies which have jurisdictional interests, access to the Work in preparation and in progress wherever located. Contractor shall provide proper and safe conditions for the access.

3.23.2 If required by City Engineer, Contractor shall furnish information concerning character of Products and progress and manner of the Work, including information necessary to determine cost of the Work, such as number of employees, pay of employees, and time employees worked on various classes of the Work.

3.24 *TRADE SECRETS*

3.24.1 Contractor will not make any claim of ownership of trade secrets as to products used in the Work, or preparation of any mixture for the Work. City Engineer will at all times have the right to demand and Contractor shall furnish information concerning materials or samples of ingredients of any materials used, or proposed to be used, in preparation of concrete placed or other work to be done. Mixtures, once agreed on, shall not be changed in any manner without knowledge and consent of City Engineer. The City will make its best efforts to protect confidentiality of proprietary information.

3.25 *INDEMNIFICATION*

3.25.1 CONTRACTOR AGREES TO AND SHALL DEFEND, INDEMNIFY, AND HOLD THE CITY, ITS AGENTS, EMPLOYEES, OFFICERS, AND LEGAL REPRESENTATIVES (COLLECTIVELY THE “CITY”) HARMLESS FOR ALL CLAIMS, CAUSES OF ACTION, LIABILITIES, FINES, AND EXPENSES (INCLUDING, WITHOUT LIMITATION, ATTORNEYS’ FEES, COURT COSTS, AND ALL OTHER DEFENSE COSTS AND INTEREST) FOR INJURY, DEATH, DAMAGE, OR LOSS TO PERSONS OR PROPERTY SUSTAINED IN CONNECTION WITH OR INCIDENTAL TO PERFORMANCE UNDER THE CONTRACT INCLUDING, WITHOUT LIMITATION, THOSE CAUSED BY:

.1 CONTRACTOR’S AND/OR ITS AGENTS’, EMPLOYEES’, OFFICERS’, DIRECTORS’, CONTRACTORS’, OR SUBCONTRACTORS’ (COLLECTIVELY IN NUMBERED SUBPARAGRAPHS .1 through .3, “CONTRACTOR”) ACTUAL OR ALLEGED NEGLIGENCE OR INTENTIONAL ACTS OR OMISSIONS;

.2 THE CITY’S AND CONTRACTOR’S ACTUAL OR ALLEGED CONCURRENT NEGLIGENCE, WHETHER CONTRACTOR IS IMMUNE FROM LIABILITY OR NOT;

.3 THE CITY'S AND CONTRACTOR'S ACTUAL OR ALLEGED STRICT PRODUCTS LIABILITY OR STRICT STATUTORY LIABILITY, WHETHER CONTRACTOR IS IMMUNE FROM LIABILITY OR NOT.

CONTRACTOR SHALL DEFEND, INDEMNIFY, AND HOLD THE CITY HARMLESS DURING THE TERM OF THE CONTRACT AND FOR FOUR YEARS AFTER THE CONTRACT TERMINATES. CONTRACTOR SHALL NOT INDEMNIFY THE CITY FOR THE CITY'S SOLE NEGLIGENCE.

3.25.2 NOTWITHSTANDING ANYTHING TO THE CONTRARY, THE LIABILITY OF CONTRACTOR FOR THE CITY'S CONCURRENT NEGLIGENCE SHALL NOT EXCEED $1,000,000.

3.26 *RELEASE AND INDEMNIFICATION – PATENT, COPYRIGHT, TRADEMARK, AND TRADE SECRET INFRINGEMENT*

3.26.1 UNLESS OTHERWISE SPECIFICALLY REQUIRED BY THE CONTRACT, CONTRACTOR AGREES TO AND SHALL RELEASE AND DEFEND, INDEMNIFY, AND HOLD HARMLESS THE CITY, ITS AGENTS, EMPLOYEES, OFFICERS, AND LEGAL REPRESENTATIVES (COLLECTIVELY THE "CITY") FROM ALL CLAIMS OR CAUSES OF ACTION BROUGHT AGAINST THE CITY BY ANY PARTY, INCLUDING CONTRACTOR, ALLEGING THAT THE CITY'S USE OF ANY EQUIPMENT, SOFTWARE, PROCESS, OR DOCUMENTS CONTRACTOR FURNISHES DURING THE TERM OF THE CONTRACT INFRINGES ON A PATENT, COPYRIGHT, OR TRADEMARK, OR MISAPPROPRIATES A TRADE SECRET. CONTRACTOR SHALL PAY ALL COSTS (INCLUDING, WITHOUT LIMITATION, ATTORNEYS' FEES, COURT COSTS, AND ALL OTHER DEFENSE COSTS, AND INTEREST) AND DAMAGES AWARDED.

3.26.2 CONTRACTOR SHALL NOT SETTLE ANY CLAIM ON TERMS WHICH PREVENT THE CITY FROM USING THE EQUIPMENT, SOFTWARE, PROCESS, OR PRODUCT WITHOUT THE CITY ENGINEER'S PRIOR WRITTEN CONSENT.

3.26.3 UNLESS OTHERWISE SPECIFICALLY REQUIRED BY THE CONTRACT, WITHIN 60 DAYS AFTER BEING NOTIFIED OF THE CLAIM, CONTRACTOR SHALL, AT ITS OWN EXPENSE, EITHER:

.1 OBTAIN FOR THE CITY THE RIGHT TO CONTINUE USING THE EQUIPMENT, SOFTWARE, PROCESS, OR PRODUCT, OR

.2 IF BOTH PARTIES AGREE, REPLACE OR MODIFY THEM WITH COMPATIBLE AND FUNCTIONALLY EQUIVALENT PRODUCTS.

IF NONE OF THESE ALTERNATIVES IS REASONABLY AVAILABLE, THE CITY MAY RETURN THE EQUIPMENT, SOFTWARE, OR PRODUCT, OR DISCONTINUE THE PROCESS, AND CONTRACTOR SHALL REFUND THE PURCHASE PRICE.

3.27 *INDEMNIFICATION PROCEDURES*

3.27.1 *Notice of Indemnification Claims:* If the City or Contractor receives notice of any claim or circumstances which could give rise to an indemnified loss, the receiving party shall give written notice to the other Party within 10 days. The notice must include the following:

.1 a description of the indemnification event in reasonable detail,

.2 the basis on which indemnification may be due, and

.3 the anticipated amount of the indemnified loss.

This notice does not estop or prevent the City from later asserting a different basis for indemnification or a different amount of indemnified loss than that indicated in the initial notice. If the City does not provide this notice within the 10-day period, it does not waive any right to indemnification except to the extent that Contractor is prejudiced, suffers loss, or incurs expense because of the delay.

3.27.2 *Defense of Indemnification Claims:*

.1 *Assumption of Defense:* Contractor may assume the defense of the claim at its own expense with counsel chosen by it that is reasonably satisfactory to the City. Contractor shall then control the defense and any negotiations to settle the claim. Within 10 days after receiving written notice of the indemnification request, Contractor must advise the City as to whether or not it will defend the claim. If Contractor does not assume the defense, the City shall assume and control the defense, and all defense expenses constitute an indemnified loss.

.2 *Continued Participation:* If Contractor elects to defend the claim, the City may

retain separate counsel to participate in, but not control, the defense and to participate in, but not control, any settlement negotiations. Contractor may settle the claim without the consent or agreement of the City, unless it:

.1 would result in injunctive relief or other equitable remedies or otherwise require the City to comply with restrictions or limitations that adversely affect the City;

.2 would require the City to pay amounts that Contractor does not fund in full; or

.3 would not result in the City's full and complete release from all liability to the plaintiffs or claimants who are parties to or otherwise bound by the settlement.

3.28 ***CONTRACTOR DEBT***

IF CONTRACTOR, AT ANY TIME DURING THE TERM OF THIS AGREEMENT, INCURS A DEBT, AS THE WORD IS DEFINED IN SECTION 15-122 OF THE HOUSTON CITY CODE OF ORDINANCES, IT SHALL IMMEDIATELY NOTIFY CITY CONTROLLER IN WRITING. IF CITY CONTROLLER BECOMES AWARE THAT CONTRACTOR HAS INCURRED A DEBT, IT SHALL IMMEDIATELY NOTIFY CONTRACTOR IN WRITING. IF CONTRACTOR DOES NOT PAY THE DEBT WITHIN 30 DAYS OF EITHER SUCH NOTIFICATION, CITY CONTROLLER MAY DEDUCT FUNDS IN AN AMOUNT EQUAL TO THE DEBT FROM ANY PAYMENTS OWED TO CONTRACTOR UNDER THIS AGREEMENT, AND CONTRACTOR WAIVES ANY RECOURSE THEREFOR. CONTRACTOR SHALL FILE A NEW AFFIDAVIT OF OWNERSHIP, USING THE FORM DESIGNATED BY CITY, BETWEEN FEBRUARY 1 AND MARCH 1 OF EVERY YEAR DURING THE TERM OF THE CONTRACT.

ARTICLE 4 - ADMINISTRATION OF THE CONTRACT

4.1 *CONTRACT ADMINISTRATION*

4.1.1 City Engineer will provide administration of the Contract and City Engineer is authorized to issue Change Orders, Work Change Directives, and Minor Changes in the Work.

4.1.2 City Engineer may act through Project Manager, Design Consultant, or Inspector. When the term "City Engineer" is used in the Contract, action by City Engineer is required unless City Engineer delegates his authority in writing. The City Engineer may not delegate authority to render decisions under Section 4.4.

The City does not have control over or charge of, and is not responsible for, supervision, construction, and safety procedures enumerated in Section 3.3. The City does not have control over or charge of and is not responsible for acts or omissions of Contractor, Subcontractors, or Suppliers.

4.1.3 The City and Design Consultant may attend project meetings and visit the site to observe progress and quality of the Work. The City and Design Consultant are not required to make exhaustive or continuous on-site inspections to check quality or quantity of the Work.

4.1.4 Project Manager will review and approve or take other appropriate action on Contractor's submittals, but only for limited purpose of checking for conformance with information given and design concept expressed in the Contract.

4.1.5 Project Manager's review of the submittals is not conducted for purpose of determining accuracy and completeness of other details, such as dimensions and quantities, or for substantiating instructions for installation or performance of Products, all of which remain the responsibility of Contractor.

4.1.6 Project Manager’s review of submittals does not relieve Contractor of its obligations under Sections 3.3, 3.12, and 3.18. Review does not constitute approval of safety precautions or, unless otherwise specifically stated by Project Manager in writing, of construction means, methods, techniques, sequences, or procedures. Project Manager’s review of a specific item does not indicate approval of an assembly of which the item is a component.

4.1.7 Based on field observations and evaluations, Project Manager will process Contractor's progress payments, certify amounts due Contractor, and issue Certificates for Payment in the amount certified.

4.1.8 Project Manager will receive and forward to City Engineer for his review and records, written warranties and related documents required by the Contract and assembled by Contractor.

4.1.9 Upon written request by Contractor or Project Manager, City Engineer will resolve matters

of interpretation of or performance of the Contract, which are not Claims. City Engineer's decisions are final and binding on the Parties.

4.1.10 City Engineer may reject work which does not conform to the Contract.

4.1.11 When City Engineer considers it necessary to implement the intent of the Contract, City Engineer may require additional inspection or testing of work in accordance with Paragraphs 13.6.3 and 13.6.4, whether such work is fabricated, Installed, or completed.

4.2 *COMMUNICATIONS IN ADMINISTRATION OF THE CONTRACT*

4.2.1 Except as otherwise provided in the Contract or when authorized by City Engineer in writing, Contractor shall communicate with Project Manager. Contractor shall communicate with Design Consultant, Design Consultant's subconsultants, and separate contractors through Project Manager. The City will communicate with Subcontractors and Suppliers through Contractor.

4.3 *CLAIMS AND DISPUTES*

4.3.1 *Documentation by Project Manager:* Contractor shall submit Claims, including those alleging an error or omission by Project Manager or Design Consultant, to Project Manager for documentation and recommendation to City Engineer.

4.3.2 *Decision of City Engineer:* Upon submission of Claim by Project Manager or Contractor, City Engineer will resolve Claims in accordance with Section 4.4.

4.3.3 *Time Limits on Claims:* Claims by Contractor must be made within 90 days after occurrence of event giving rise to the Claim.

4.3.4 *Continuing the Contract Performance:* Pending final resolution of a Claim including referral to non-binding mediation, unless otherwise agreed in writing, Contractor shall proceed diligently with the performance of the Contract and the City will continue to make payments in accordance with the Contract.

4.3.4.1 Pending final resolution of a Claim including referral to non-binding mediation, Contractor is responsible for safety and protection of physical properties and conditions at site.

4.3.5 *Claims for Concealed or Unknown Conditions:* Concealed or unknown physical conditions include utility lines, other man-made structures, storage facilities, Pollutants and Pollutant Facilities, and the like, but do not include conditions arising from Contractor operations, or failure of Contractor to properly protect and safeguard subsurface facilities. Concealed conditions also include naturally-occurring soil conditions outside the range of soil conditions identified through geotechnical investigations, but do not include conditions arising from groundwater, rain, or flood.

4.3.5.1 If conditions are encountered at the site which are Underground Facilities or otherwise concealed or unknown conditions which differ materially from:

.1 those indicated by the Contract; or
.2 conditions which Contractor could have discovered through site inspection, geotechnical testing, or otherwise;

then Contractor will give written notice to City Engineer no later than five days after Contractor's first observation of the condition and before condition is disturbed. Contractor's failure to provide notice constitutes a waiver of a Claim.

4.3.5.2 City Engineer will promptly investigate concealed or unknown conditions. If City Engineer determines that conditions at the site are not materially different and that no change in Contract Price or Contract Time is justified, City Engineer will notify Contractor in writing, stating reasons. If City Engineer determines the conditions differ materially and cause increase or decrease in Contractor's cost or time required for performance of part of the Work, City Engineer will recommend an adjustment in Contract Price or Contract Time, or both, as provided in Article 7. Opposition by a Party to the City Engineer's determination must be made within 21 days after City Engineer has given notice of the decision. If the Parties cannot agree on adjustment to Contract Price or Contract Time, adjustment is subject to further proceedings pursuant to Section 4.4.

4.3.6 *Claims for Additional Cost:* If Contractor wishes to make a Claim for increase in Contract Price, Contractor shall give written notice before proceeding with work for which Contractor intends to submit a Claim. Prior notice is not required for Claims relating to an emergency endangering life or property arising under Section 10.4.

4.3.6.1 Contractor may file a Claim in accordance with Section 4.4 if Contractor believes it has incurred additional costs, for the following reasons:

.1 written interpretation of City Engineer;
.2 order by City Engineer to stop the Work when Contractor is not at fault;
.3 suspension of the Work by City Engineer;
.4 termination of the Contract by City Engineer; or
.5 The City's non-compliance with another provision of the Contract.

4.3.6.2 No increase in Contract Price is allowed for delays or hindrances to the Work, except for direct and unavoidable extra costs to Contractor caused by failure of the City to provide information and services, or to make land and materials available, when required of the City under the Contract. Any increase claimed is subject to the provisions of Section 4.4 and Article 7.

4.3.6.3 The City is not liable for Claims for delay when Date of Substantial Completion occurs prior to expiration of Contract Time.

4.3.7 *Claims for Additional Time:* If Contractor wishes to make a Claim for an increase in Contract Time, Contractor shall give written notice as provided in Section 8.2. In case of continuing delay, only one Claim is necessary.

4.4 *RESOLUTION OF CLAIMS AND DISPUTES*

4.4.1 City Engineer will review Claims and take one or more of the following preliminary actions within 30 days of receipt of Claim:

.1 submit a suggested time to meet and discuss the Claim with City Engineer;
.2 reject Claim, in whole or in part, stating reasons for rejection;
.3 recommend approval of the Claim by the other Party;
.4 suggest a compromise; or
.5 take other actions as City Engineer deems appropriate to resolve the Claim.

4.4.2 City Engineer may request additional supporting data from claimant. Party making Claim shall, within 10 days after receipt of City Engineer's request, submit additional supporting data requested by City Engineer.

4.4.3 At any time prior to rendering a written decision regarding a Claim, City Engineer may refer Claim to non-binding mediation. If Claim is resolved, City Engineer will prepare and obtain all appropriate documentation. If Claim is not resolved, City Engineer will take receipt of Claim and begin a new review under Section 4.4.

4.4.4 If Claim is not referred to or settled in non-binding mediation, City Engineer may conduct a hearing and will render a written decision, including findings of fact, within 75 days of receipt of Claim, or a time mutually agreed upon by the Parties in writing. City Engineer may notify Surety and request Surety's assistance in resolving Claim. City Engineer's decision is final and binding on the Parties.

4.5 *CONDITION PRECEDENT TO SUIT; WAIVER OF ATTORNEY FEES AND INTEREST*

4.5.1 Neither the City nor Contractor may recover attorney fees for any claim brought in connection with this Contract.

4.5.2 Neither the City nor the Contractor may recover interest for any damages claim brought in connection with this Contract except as allowed by TEXAS LOCAL GOVERNMENT CODE Chapter 2251.

4.6 *INTERIM PAYMENT WAIVER & RELEASE*

4.6.1 In accordance with section 4.3, the Contractor shall use due diligence in the discovery and submission of any Claim against the City related to the Contractor’s work.

4.6.2 The Contractor shall submit any Claim to the City not later than the 90th day after the occurrence of the event giving rise to the Claim.

4.6.3 Any failure to timely comply with the requirements of section 4.6.2 waives and releases any Claim when the Contractor submits an application for payment after the 90th day.

4.6.4 This waiver does not cover any retainage. In case of any conflict of law, this language shall be revised to the minimum extent necessary to avoid legal conflict. This waiver is made specifically for the benefit of the City.

ARTICLE 5 - SUBCONTRACTORS AND SUPPLIERS

5.1 *AWARD OF SUBCONTRACTS OTHER CONTRACTS FOR PORTIONS OF THE WORK*

5.1.1 Contractor may not contract with a Subcontractor, Supplier, person, or entity that City Engineer has made a reasonable and timely objection to.

5.1.2 If City Engineer has a reasonable objection to person or entity proposed by Contractor, Contractor shall propose another with whom City Engineer has no reasonable objection.

5.1.3 Contractor shall execute contracts with approved Subcontractors, Suppliers, persons, or entities before the Subcontractors or Suppliers begin work under the Contract. All such contracts must be executed and sent to the OBO Director and Contracting Department within 30 days after the date of the Notice to Proceed and must include provisions set forth in Articles 3 and 5 of this Document.

5.1.4 Contractor shall notify City Engineer in writing of any proposed change of Subcontractor, Supplier, person, or entity previously accepted by the City.

5.1.5 Contractor shall make timely payments to Subcontractors and Suppliers for performance of the Contract. Contractor shall protect, defend, and indemnify the City from any claim or liability arising out of Contractor's failure to make the payments. Disputes relating to payment of Business Enterprise Subcontractors or Suppliers will be submitted to arbitration in same manner as other disputes under Business Enterprise subcontracts. Failure of Contractor to comply with decisions of arbitrator may be determined by City Engineer a material breach leading to termination of the Contract.

5.2 *CONTRACTOR RESPONSIBILITY FOR SUBCONTRACTORS*

5.2.1 Contractor is responsible to the City, as may be required by laws and regulations, for all acts and omissions of Subcontractors, Suppliers, and other persons and organizations performing or furnishing any of the Work under direct or indirect contract with Contractor.

5.2.2 Contractor shall make available to each proposed Subcontractor, prior to execution of subcontract, copies of the Contract to which Subcontractor is bound by this Section 5.2. Contractor shall notify Subcontractor of any terms of proposed subcontract which may be at variance with the Contract.

5.2.3 The City's approval of Subcontractor or Suppliers does not relieve Contractor of its obligation to perform, or to have performed to the full satisfaction of the City, the Work required by the Contract.

5.2.4 Unless there is a contractual relationship between Contractor and a Subcontractor or Supplier to the contrary, Contractor shall withhold no more retainage from Subcontractors or Suppliers than City withholds from Contractor under this Agreement. However, once a Subcontractor or Supplier completes performance, Contractor shall release all retainage to that Subcontractor or Supplier regardless if City continues to retain under this Agreement.

5.2.5 Prior to a Subcontractor or Supplier commencing performance for Contractor, Contractor shall meet with that Subcontractor or Supplier to provide instructions on invoicing procedures, dispute resolution procedures, and statutory rights, such as claim filing procedures under the McGregor Act. Subcontractors and Suppliers must certify to the City Engineer that Contractor has fulfilled the requirements of this Section.

ARTICLE 6 - CONSTRUCTION BY THE CITY OR BY SEPARATE CONTRACTORS

6.1 *THE CITY'S RIGHT TO PERFORM CONSTRUCTION AND TO AWARD SEPARATE CONTRACTS*

6.1.1 The City may perform on-site construction operations related to the Work and as part of the Project with the City's workforce or with separate contractors.

6.2 *COORDINATION*

6.2.1 The City will coordinate activities of the City's workforce and of each separate contractor with work of Contractor, and Contractor shall cooperate with the City and separate contractors.

6.2.1.1 Contractor shall participate with other separate contractors and the City in reviewing their construction schedules when directed to do so by the Project Manager. Contractor shall make revisions to construction schedule and Contract Price deemed

necessary after joint review and mutual agreement. Construction schedules shall then constitute schedules to be used by Contractor, separate contractors, and the City, until subsequently revised.

6.2.2 Contractor shall afford to the City and to separate contractors reasonable opportunity for introduction and storage of their materials and equipment, and for performance of their activities.

6.2.3 If part of Contractor's work depends on proper execution of construction or operations by the City or a separate contractor, Contractor shall, prior to proceeding with that portion of the Work, inspect the other work and promptly report to City Engineer apparent discrepancies or defects in the other construction that would render it unsuitable for the proper execution of the Work. Failure of Contractor to report apparent discrepancies or defects in the other construction shall constitute acknowledgment that the City's or separate contractor's completed or partially completed construction is fit and proper to receive Contractor's work, except as to discrepancies or defects not then reasonably discoverable.

6.3 *MUTUAL RESPONSIBILITY*

6.3.1 The responsible party bears the costs caused by delays, by improperly timed activities, or by nonconforming construction.

6.3.2 Contractor shall promptly remedy damage caused by Contractor to completed or partially completed construction or to property of the City or separate contractor.

6.3.3 Claims or disputes between Contractor and other City contractors, or subcontractors of other City contractors, working on the Project must be submitted to binding arbitration in accordance with Construction Industry Arbitration Rules of the American Arbitration Association upon demand by any party to the dispute or by the City.

6.4 *THE CITY'S RIGHT TO CLEAN UP*

6.4.1 If dispute arises among Contractor, separate contractors, and the City as to responsibility under their respective contracts for maintaining premises and surrounding area free from waste materials and rubbish as described in Section 3.21, the City may clean up and allocate cost among those responsible, as determined by City Engineer.

ARTICLE 7 - CHANGES IN THE WORK

7.1 *CHANGES*

7.1.1 Changes in scope of the Work, subject to limitations in Article 7 and elsewhere in the Contract, may be accomplished without invalidating the Contract, or without notifying Surety by:

.1 Change Order;
.2 Work Change Directive; or
.3 Minor Change in the Work.

7.1.2 The following types of Change Orders require City Council approval:

.1 a single Change Order that exceeds five percent of Original Contract Price,
.2 a Change Order which, when added to previous Change Orders, exceeds five percent of Original Contract Price,
.3 a Change Order, in which the total value of increases outside of the general scope of work approved by City Council, when added to increases outside the general scope of work approved by City Council in previous Change Orders, exceeds 40 percent of the Original Contract Price, even if the net increase to the Original Contract Price is five percent or less.
In this context, “increase” means an increase in quantity resulting from the addition of locations not within the scope of work approved by City Council, or the addition of types of goods or services not bid as unit price items.

Nothing in this Section is intended to permit an increase of the Contract Price in excess of the limit set out in TEX. LOC. GOV’T CODE ANN. §252.048 or its successor statute.

7.1.3 Contractor shall proceed promptly to execute changes in the Work provided in Modifications, unless otherwise stated in the Modification.

7.2 *WORK CHANGE DIRECTIVES*

7.2.1 A Work Change Directive cannot change Contract Price or Contract Time, but is evidence that the Parties agree that a change, ordered by directive, will be incorporated in a subsequently issued Change Order as to its effect, if any, on Contract Price or Contract Time.

7.2.2 Failure by Contractor to commence work identified in a Work Change Directive within the time specified by City Engineer, or to complete the

work in a reasonable period of time, may be determined by City Engineer to be a material breach of Contract.

7.2.3 A Work Change Directive is used in the absence of total agreement of the terms of a Change Order. Interim payments are made in accordance with Paragraph 9.6.1.

7.2.4 If Contractor signs a Work Change Directive, then Contractor agrees to its terms including adjustment in Contract Price and Contract Time or method for determining them. Agreement by the Parties to adjustments in Contract Price and Contract Time are immediately recorded as a Change Order.

7.2.5 City Engineer, by Work Change Directive, may direct Contractor to take measures as necessary to expedite construction to achieve Date of Substantial Completion on or before expiration of Contract Time. When the Work is expedited solely for convenience of the City and not due to Contractor's failure to prosecute timely completion of the Work, then Contractor is entitled to an adjustment in Contract Price equal to actual costs determined in accordance with Article 7.

7.3 *ADJUSTMENTS IN CONTRACT PRICE*

7.3.1 Adjustments in Contract Price are accomplished by Change Order and are based on one of the following methods:

.1 mutual acceptance of fixed price, properly itemized and supported by sufficient data to permit evaluation;
.2 unit prices stated in the Contract or subsequently agreed upon;
.3 cost to be determined in a manner agreed upon by the Parties and mutually acceptable fixed or percentage fee; or
.4 as provided in Paragraph 7.3.2.

7.3.2 If Contractor does not agree with a change in Contract Price or Contract Time or the method for adjusting them specified in the Work Change Directive within 21 days from date of the Work Change Directive's issuance, method and adjustment are determined by City Engineer. If Project Manager or Contractor disagree with City Engineer's determination they then may file a Claim in accordance with Section 4.4.

7.3.2.1 If City Engineer determines a method and adjustment in Contract Price under Paragraph 7.3.2, Contractor shall provide, in a form as City Engineer may prescribe, appropriate supporting data for items submitted under Paragraph 7.3.2. Failure to submit the data within 21 days of request for the data by City Engineer shall constitute waiver of a Claim.

7.3.2.2 Unless otherwise provided in the Contract, costs for the purposes of this Paragraph 7.3.2 are limited to the following:

.1 costs of labor, including labor burden as stated below for social security, unemployment insurance, customary and usual fringe benefits required by agreement or custom, and Workers' Compensation insurance;
  .1 the maximum labor burden applied to costs of labor for changes in the Work is 55 percent;
.2 costs of materials, supplies, and equipment, including cost of transportation, whether incorporated or consumed;
.3 rental costs of machinery and equipment, exclusive of hand tools, whether rented from Contractor or others, with prior approval of City Engineer;
.4 costs of premiums for Bonds and insurance and permit fees related to the change in the Work;
.5 additional costs of direct supervision of work and field office personnel directly attributable to the change; and
.6 allowances for overhead and profit as stated below.
  .1 the maximum allowances for overhead and profit on increases due to Change Orders:
  .2 for changes in the Work performed by Contractor and Subcontractors, allowance for overhead and profit are applied to an amount equal to cost of all additions less cost of all deletions to the Work. Allowance for overhead to Contractor and first tier Subcontractors on changes performed by Subcontractors are applied to an amount equal to the sum of all increases to the Work by applicable Subcontractors.

	Overhead	Profit
to Contractor for change in the Work performed by Subcontractors:	10 percent	0 percent
to first tier Subcontractors for change in the Work performed by its Subcontractors:	10 percent	0 percent
to Contractor and Subcontractor for change in the Work performed by their respective firms:	10 percent	5 percent

7.3.3 If the City deletes or makes a change, which results in a net decrease in Contract Price, the City is entitled to a credit calculated in accordance with Paragraphs 7.3.1 and 7.3.2 and Subparagraphs 7.3.2.1, and 7.3.2.2.1 through 7.3.2.2.5. When both additions and credits covering related work or substitutions are involved in a change, allowance for overhead and profit is figured on the basis of a net increase, if any, with respect to that change in accordance with Subparagraph 7.3.2.2.6.

7.3.4 When Contractor agrees with the determination made by City Engineer concerning adjustments in Contract Price and Contract Time, or the Parties otherwise reach agreement upon the adjustments, the agreement will be immediately recorded by Change Order.

7.4 *MINOR CHANGES IN THE WORK*

7.4.1 A Minor Change in Work is binding on the Parties. Contractor shall acknowledge, in a written form acceptable to City Engineer, that there is no change in Contract Time or Contract Price and shall carry out the written orders promptly.

ARTICLE 8 - TIME

8.1 *PROGRESS AND COMPLETION*

8.1.1 Time is of the essence in the Contract. By executing the Contract, Contractor agrees that Contract Time is a reasonable period for performing the Work.

8.1.2 *Computation of Time:* In computing any period of time prescribed or allowed by the General Conditions, the day of the act, event, or default after which designated period of time begins to run is not to be included. Last day of the period so computed is to be included, unless it is a Sunday or Legal Holiday, in which event the period runs until end of next day which is not a Sunday or Legal Holiday. Sundays and Legal Holidays are considered to be days and are to be included in all other time computations relative to Contract Time.

8.1.3 Contractor may not commence the Work prior to the effective date of insurance and Bonds required by Article 11.

8.1.4 Contractor shall proceed expeditiously and without interruption, with adequate forces, and shall achieve Date of Substantial Completion within Contract Time.

8.1.5 Should progress of the Work fall behind construction schedule, except for reasons stated in Paragraph 8.2.1, Contractor shall promptly submit at the request of Project Manager, updated construction schedule to City Engineer for approval. Contractor's failure to submit updated schedule may, at City Engineer's discretion, constitute a material breach of the Contract. Contractor shall take action necessary to restore progress by working the hours, including night shifts and lawful overtime operations as necessary, to achieve Date of Substantial Completion within Contract Time.

8.1.6 Except in connection with safety or protection of persons or the Work or property at the site or adjacent to the site, and except as otherwise indicated in the Contract, all the Work at the site will be performed Monday through Saturday between the hours of 7:00 a.m. and 7:00 p.m. Contractor may not perform work between 7:00 p.m. and 7:00 a.m., on a Sunday, or on a Legal Holiday, without giving City Engineer 24-hour prior written notice and receiving written consent of City Engineer.

8.2 *DELAYS AND EXTENSIONS OF TIME*

8.2.1 Contractor may request extension of Contract Time for a delay in performance of work that arises from causes beyond control and without fault or negligence of Contractor. Examples of these causes are:

.1 acts of God or of the public enemy;
.2 acts of government in its sovereign capacity;
.3 fires;
.4 floods;
.5 epidemics;
.6 quarantine restrictions;
.7 strikes;
.8 freight embargoes;
.9 unusually severe weather; and
.10 discovery of Pollutants or Pollutant Facilities at the site.

8.2.2 For any reason other than those listed in Section 4.3.6.2, if the Contractor's work is delayed in any manner or respect, the Contractor shall have no claim for damages and shall have no right of additional compensation from the City by reason of any delay or increased expense to the Contractor's work, except for an extension of time as provided in this provision.

8.2.3 Contractor may request an extension of Contract Time for delay only if:

.1 delay is caused by failure of Subcontractor or Supplier to perform or make progress; and

.2 cause of failure is beyond control of both Contractor and Subcontractor or Supplier.

8.2.4 Claims relating to Contract Time must be made in accordance with Paragraph 4.3.7.

8.2.5 Claims for extending or shortening Contract Time are based on written notice promptly delivered by the Party making Claim to other Party. Claim must accurately describe occurrence generating Claim, and a statement of probable effect on progress of the Work.

8.2.6 Claims for extension of Contract Time are considered only when a Claim is filed within the time limits stated in Paragraph 4.3.3.

.1 Notwithstanding paragraph 4.3.3, an extension of time for delays under this paragraph may be granted only upon written application by the Contractor within 48 hours from the claimed delay.

8.2.7 Written notice of Claim must be accompanied by claimant's written statement that adjustment claimed is entire adjustment to which claimant is entitled as a result of the occurrence of the event. When the Parties cannot agree, Claims for adjustment in Contract Time are determined by City Engineer in accordance with Section 4.4.

8.2.8 Adjustments to Contract Time are accomplished by Change Order.

ARTICLE 9 - PAYMENTS AND COMPLETION

9.1 *UNIT PRICE WORK*

9.1.1 Where the Contract provides that all or part of the Work is based on Unit Prices, the Original Contract Price includes, for all Unit Price work, an amount equal to the sum of Unit Prices times Unit Price Quantities for each separately identified item of Unit Price work.

9.1.2 Each Unit Price includes an amount to cover Contractor's overhead and profit for each separately identified item.

9.1.3 The Contractor may not make a Claim against the City for excess or deficiency in Unit Price Quantities provided in the Contract, except as provided in Subparagraph 9.1.4. Payment at the prices stated in the Contract is in full for the completed work. Contractor is not entitled to additional payment for materials, supplies, labor, tools, machinery and all other expenditures incidental to satisfactory completion of the Work.

9.1.4 City Engineer may increase or decrease quantities of the Work within limitations stated in Paragraph 7.1.2. Contractor is entitled to payment for actual quantities of items provided at Unit Prices set forth in the Contract.

9.1.5 Where the final quantity of work performed by Contractor on Major Unit Price Work item differs by more than 25 percent from quantity of the item stated in the Contract, a Party may request an adjustment in Unit Price, for the portion that differs by more than 25 percent, by a Change Order under Section 7.3.

9.2 *ESTIMATES FOR PAYMENT, UNIT PRICE WORK*

9.2.1 Following the day of each month indicated in the Contract, Project Manager will prepare a Certificate for Payment for the preceding monthly period based on estimated units of work completed. Prior to preparing Certificate of Payment, Contractor shall have submitted to City Engineer on a form approved by the Director of the Mayor's Office of Business Opportunity, evidence satisfactory to the City Engineer of payments made to Subcontractors and Suppliers for the month preceding the month for which the Certificate for Payment is prepared.

9.2.2 Before final completion, City Engineer will review and confirm with Contractor the actual final installed Unit Price quantities. City Engineer's determination of actual final installed Unit Price quantities will be included in the final Certificate for Payment and any previous underpayments and overpayments will be reconciled with the actual final Unit Price quantities. Contractor shall file written notice of intent to appeal, if any, City Engineer's

determination within 10 days of receipt of final Certificate for Payment. Upon expiration of the 10-day period, City Engineer's decision is final and binding on the Parties. If Contractor submits notice within the 10-day period, Contractor shall submit a Claim in accordance with Section 4.4.

9.3 *STIPULATED PRICE WORK*

9.3.1 For work contracted on a Stipulated Price basis, 10 days before submittal of first Application for Payment, Contractor shall submit to City Engineer a Schedule of Values allocated to various portions of the Work, prepared in the form and supported by the data as City Engineer may require to substantiate its accuracy. This schedule, as approved by City Engineer, is used as a basis for approval of Contractor's Applications for Payment.

9.4 *APPLICATIONS FOR PAYMENT, STIPULATED PRICE WORK*

9.4.1 For work contracted on a Stipulated Price basis, Contractor shall submit Applications for Payment to City Engineer each month on a form acceptable to City Engineer in accordance with Schedule of Values. Application must indicate percentages of completion of each portion of the Work listed in Schedule of Values as of the end of the period covered by the Application for Payment.

9.4.2 Applications for Payment must be supported by substantiating data as City Engineer may require and must reflect retainages as provided below. Evidence satisfactory to the City Engineer of payments made to Subcontractors and Suppliers for the month preceding the month for which the Application for Payment is submitted must accompany each Application for Payment on a form approved by the Director of Mayor's Office of Business Opportunity. Application must be sworn and notarized.

9.5 *CERTIFICATES FOR PAYMENT*

9.5.1 City Engineer will, within 10 days after the date specified in the Contract for Unit Price work, or upon receipt of Contractor's Application for Payment for Stipulated Price work, issue a Certificate for Payment for work based on amount which City Engineer determines is properly due, with copy to Contractor.

9.5.2 Unless otherwise provided in the Contract, payment for completed work and for properly stored Products is conditioned upon compliance with procedures satisfactory to City Engineer to protect the City's interests. Procedures will include applicable insurance, storage, and transportation to site for materials and equipment stored off-site. Contractor is responsible for maintaining materials and equipment until Date of Substantial Completion.

9.5.3 Contractor shall document its use of Ultra Low Sulfur Diesel Fuel by providing invoices and receipts evidencing Contractor's use.

9.6 *COMPUTATIONS OF CERTIFICATES FOR PAYMENT*

9.6.1 Subject to the provisions of the Contract, the amount of each Certificate for Payment is calculated as follows:

.1 that portion of Contract Price allocated to completed work as determined by:
  .1 multiplying the percentage of completion of each portion of the Work listed in the Schedule of Values by the value of that portion of the Work, or
  .2 multiplying Unit Price quantities Installed times the Unit Prices listed in the Contract;
.2 plus progress payments for completed work that has been properly authorized by Modifications;
.3 less retainage of five percent;
.4 plus actual costs, properly substantiated by certified copies of invoices and freight bills, of non-perishable materials and equipment delivered and properly stored, if approved in advance by Project Manager, less 15 percent;
.5 less any previous payments by the City.

9.7 *DECISIONS TO WITHHOLD CERTIFICATION*

9.7.1 City Engineer may decline to certify payment and may withhold payment in whole or in part to the extent reasonably necessary to protect the City if, in City Engineer's opinion, there is reason to believe that:

.1 nonconforming work has not been remedied;
.2 the Work cannot be completed for unpaid balance of Contract Price;
.3 there is damage to the City or another contractor;
.4 the Work will not be completed within Contract Time and that unpaid balance will not be adequate to cover actual and liquidated damages;

.5 probable evidence that third party claims will be filed in court, in arbitration, or otherwise;

.6 Contractor has failed to make payments to Subcontractors or Suppliers for labor, material, or equipment; or

.7 Contractor has persistently failed to carry out work in accordance with the Contract.

.8 Contractor has not paid Subcontractors or Suppliers because of a payment dispute; or

.9 Contractor has failed to provide satisfactory evidence described in Paragraphs 9.2.1, 9.4.2, and 9.8.2.

9.7.2 When the above reasons for withholding certification are removed, certification will be made for amounts previously withheld.

9.7.3 City Engineer may decline to certify payment and may withhold request for payment in whole or in part upon failure of Contractor to submit initial construction schedule or monthly schedule updates, as required in Paragraphs 3.15.1 and 3.15.3.

9.8 *PROGRESS PAYMENTS*

9.8.1 The City will make payment, in an amount certified by City Engineer, within 20 days after City Engineer has issued a Certificate for Payment.

9.8.2 The City has no obligation to pay or to facilitate the payment to a Subcontractor or Supplier, except as may otherwise be required by law. Contractor shall comply with the prompt payment requirements of Chapter 2251 of the Government Code. State law requires payment of Subcontractors and Suppliers by Contractor within 7 calendar days of Contractor's receipt of payment from the City, unless there is a payment dispute between Contractor and a Subcontractor or Supplier evidenced on a form approved by the Director of Mayor's Office of Business Opportunity and submitted to the City Engineer each month with Application for Payment or Estimate for Payment. **CONTRACTOR SHALL DEFEND AND INDEMNIFY THE CITY FROM ANY CLAIMS OR LIABILITY ARISING OUT OF CONTRACTOR'S FAILURE TO MAKE THESE PAYMENTS.**

9.8.2.1 The City may, upon request and at the discretion of City Engineer, furnish to Subcontractor information regarding percentages of completion or the amounts applied for by Contractor, and action taken thereon by the City because of work done by the Subcontractor.

9.8.2.2 Contractor shall prepare and submit to City Engineer a Certification of Payment to Subcontractors and Suppliers form to be attached to each monthly Estimate for Payment or Application for Payment.

9.8.3 A Certificate for Payment, a progress payment, or partial or entire use or occupancy of the Work by the City, does not constitute acceptance of work which is not in accordance with the Contract.

9.9 *DATE OF SUBSTANTIAL COMPLETION*

9.9.1 When Contractor considers the Work, or a portion thereof designated by City Engineer, to be substantially complete, Contractor shall prepare and submit to Project Manager a comprehensive punch list of items to be completed or corrected. Failure to include an item on the punch list does not alter the responsibility of Contractor to comply with the Contract.

9.9.1.1 By submitting the punch list to Project Manager, Contractor represents that work on the punch list will be completed within the time provided for in Subparagraph 9.9.4.3.

9.9.2 Upon receipt of Contractor's punch list, Project Manager will inspect the Work, or designated portion thereof, to verify that the punch list contains all items needing completion or correction. If Project Manager's inspection discloses items not on Contractor's punch list, the items must be added to the punch list of items to be completed or corrected. If Project Manager's inspection reveals that Contractor is not yet substantially complete, Contractor shall complete or correct the deficiencies and request another inspection by Project Manager. The City may recover the costs of re-inspection from Contractor.

9.9.3 Prior to City Engineer's issuing a Certificate of Substantial Completion, Contractor shall also provide:

.1 Certificate of Occupancy for new construction, or Certificate of Compliance for remodeled work, as applicable, and

.2 compliance with Texas Accessibility Standards through state inspection of the Work, if required. If Contractor calls for inspection in a timely manner

and the inspection is delayed through no fault of Contractor, and City Engineer so confirms, City Engineer may, upon request by Contractor, add the inspection to the punch list in Paragraph 9.9.2 and issue a Certificate of Substantial Completion.

9.9.4 When the Work, or designated portion thereof, is determined by City Engineer to be sufficiently complete in accordance with the Contract so the City can occupy or utilize the Work, or designated portion thereof, for the purpose for which it is intended, City Engineer will prepare a Certificate of Substantial Completion that incorporates the punch list in Paragraph 9.9.2 and establishes:

.1 Date of Substantial Completion;

.2 responsibilities of the Parties for security, maintenance, heating, ventilating and air conditioning, utilities, damage to the Work, and insurance; and

.3 fixed time within which Contractor shall complete all items on punch list of items to be corrected accompanying the certificate.

9.9.5 Warranties required by the Contract shall commence on the Date of Substantial Completion unless otherwise provided by City Engineer in Certificate of Substantial Completion. Warranties may not commence on items not substantially completed.

9.9.6 After Date of Substantial Completion and upon application by Contractor and approval by City Engineer, the City may make payment, reflecting adjustment in retainage, if any, as follows:

.1 with the consent of Surety, the City may increase payment to Contractor to 96 percent of Contract Price, less value of items to be completed and accrued liquidated damages.

9.9.7 Contractor shall complete or correct the items in Paragraph 9.9.2 within the time period set out in the Certificate of Substantial Completion. If Contractor fails to do so, the City may issue a Notice of Noncompliance and proceed according to Section 2.5.

9.10 *PARTIAL OCCUPANCY OR USE*

9.10.1 The City may occupy or use any completed or partially completed portion of the Work at any stage, provided the occupancy or use is consented to by Contractor and Contractor's insurer and authorized by public authorities having jurisdiction over the Work. Consent of Contractor to partial occupancy or use may not be unreasonably withheld.

9.10.2 Immediately prior to the partial occupancy or use, Project Manager and Contractor shall jointly inspect the area to be occupied or portion of the Work to be used to determine and record condition of the Work.

9.10.3 Partial occupancy or use of a portion of the Work does not constitute acceptance of work not in compliance with requirements of the Contract.

9.11 *FINAL COMPLETION AND FINAL PAYMENT*

9.11.1 Contractor shall review the Contract and inspect the Work prior to Contractor notification to City Engineer that the Work is complete and ready for final inspection. Contractor shall submit affidavit that the Work has been inspected and that the Work is complete in accordance with requirements of the Contract.

9.11.2 Project Manager will make final inspection within 15 days after receipt of Contractor's written notice that the Work is ready for final inspection and acceptance. If Project Manager finds the Work has been completed in accordance with the Contract, Contractor shall submit items set out in Paragraph 9.11.4 and, for stipulated price contracts, a final Application for Payment. City Engineer will, within 10 days, issue Certificate of Final Completion stating that to the best of City Engineer's knowledge, information, and belief, the Work has been completed in accordance with the Contract, and will recommend acceptance of the Work by City Council.

9.11.3 Should work be found not in compliance with requirements of the Contract, City Engineer will notify Contractor in writing of items of noncompliance. Upon inspection and acceptance of the corrections by Project Manager, compliance with all procedures of Paragraph 9.11.2, and Contractor's submission of the items set out in Paragraph 9.11.4, the City Engineer will issue Certificate of Final Completion to Contractor as provided in Paragraph 9.11.2.

9.11.4 Contractor shall submit the following items to City Engineer before City Engineer will issue a Certificate of Final Completion:

.1 affidavit that payrolls, invoices for materials and equipment, and other indebtedness of Contractor connected with the Work, less amounts withheld by the City, have been paid or otherwise satisfied. If required by City Engineer, Contractor shall submit

further proof including waiver or release of lien or claims from laborers or Suppliers of Products;

.2 certificate evidencing that insurance required by the Contract to remain in force after final payment is currently in effect, will not be canceled or materially changed until at least 30 days written notice has been given to the City;

.3 written statement that Contractor knows of no substantial reason that insurance will not be renewable to cover correction and warranty period required by the Contract;

.4 consent of Surety to final payment; and

.5 copies of record documents, maintenance manuals, tests, inspections, and approvals.

Upon City Engineer's issuance of a Certificate of Final Completion, Contractor may request increase in payment to 99 percent of Contract Price, less accrued liquidated damages.

9.11.5 If Contractor fails to submit required items in Paragraph 9.11.4 within 10 days of Project Manager's inspection of the Work under Paragraph 9.11.2 or Paragraph 9.11.3, City Engineer may, but is not obligated to:

.1 deduct liquidated damages accrued from monies held;

.2 proceed to City Council for acceptance of the Work, minus some or all of the items Contractor fails to submit under Paragraph 9.11.4; and,

.3 upon acceptance by City Council of the portion of the Work completed, make final payment as set out in Paragraph 9.11.8.

9.11.6 If final completion is materially delayed through no fault of Contractor, or by issuance of Change Orders affecting date of final completion, and City Engineer so confirms, the City may, upon application by Contractor and certification by City Engineer, and without terminating the Contract, make payment of balance due for that portion of the Work fully completed and accepted.

9.11.7 If remaining balance due for work not corrected is less than retainage stipulated in the Contract, Contractor shall submit to City Engineer written consent of Surety to payment of balance due for that portion of the Work fully completed and accepted, prior to certification of the payment. The payment is made under terms governing final payment, except that it does not constitute waiver of Claims.

9.11.8 The City will make final payment to Contractor within 30 days after acceptance of the Work by City Council, subject to limitations, if any, as stated in the Contract.

9.11.9 Acceptance of final payment by Contractor shall constitute a waiver of all Claims, whether known or unknown, by Contractor, except those previously made in writing and identified by Contractor as unsettled at time of final Application for Payment.

9.12 *LIQUIDATED DAMAGES*

9.12.1 Contractor, Surety, and the City agree that failure to complete the Work within Contract Time will cause damages to the City and that actual damages from harm are difficult to estimate accurately. Therefore, Contractor, Surety, and the City agree that Contractor and Surety are liable for and shall pay to the City the amount stipulated in Supplementary Conditions as liquidated damages, and that the amount of damages fixed therein is a reasonable forecast of just compensation for harm to the City resulting from Contractor's failure to complete the Work within Contract Time. The amount stipulated will be paid for each day of delay beyond Contract Time until Date of Substantial Completion.

9.12.2 Contractor shall pay the City an amount equal to $1,200.00 per diesel operating vehicle or piece of motorized equipment per incident of high sulfur diesel fuel usage.

ARTICLE 10 - SAFETY PRECAUTIONS

10.1 *SAFETY PROGRAMS*

10.1.1 Contractor is responsible for initiating, maintaining, and supervising all safety precautions and programs in connection with performance of the Contract. Contractor shall submit a safety program to City Engineer prior to mobilizing for the Work, and is solely responsible for safety, efficiency, and adequacy of ways, means, and methods, and for damage which might result from failure or improper construction, maintenance, or operation performed by Contractor.

10.2 *POLLUTANTS AND POLLUTANT FACILITIES*

10.2.1 If Contractor encounters material on-site which it reasonably believes to be a Pollutant or

facilities which it reasonably believes to be a Pollutant Facility, Contractor shall immediately stop work in affected area and immediately notify City Engineer, confirming the notice thereafter in writing.

10.2.2 If City Engineer determines that the material is a Pollutant or facility is a Pollutant Facility, work in affected area may not be resumed except by Modification, and only if the work would not violate applicable laws or regulations.

10.2.3 If City Engineer determines that the material is not a Pollutant or a facility is not a Pollutant Facility, work in affected area will be resumed upon issuance of a Modification.

10.2.4 Contractor is not required to perform, unless authorized by Change Order, work relating to Pollutants or Pollutant Facilities except for that work relating to Pollutants or Pollutant Facilities specified in the Contract.

10.3 *SAFETY OF THE ENVIRONMENT, PERSONS, AND PROPERTY*

10.3.1 Contractor shall take reasonable precautions for safety and shall provide reasonable protection to prevent damage, injury, or loss from all causes, to:

.1 employees performing work on-site, and other persons who may be affected thereby;

.2 work, including Products to be incorporated into the Work, whether in proper storage, under control of Contractor or Subcontractor; and

.3 other property at or adjacent to the site, such as trees, shrubs, lawns, walks, pavements, roadways, structures, utilities, and Underground Facilities not designated for removal or replacement in course of construction.

10.3.2 Contractor shall give notices and comply with applicable laws, ordinances, rules, regulations, and lawful orders of public authorities bearing on safety of persons, property, or environment.

10.3.2.1 Contractor shall comply with requirements of Underground Facility Damage Prevention and Safety Act TEX. UTIL. CODE ANN. Ch. 251 (Vernon Supp. 2002).

10.3.2.2 Contractor shall comply with all safety rules and regulations of the Federal Occupational Health and Safety Act of 1970 and subsequent amendments (OSHA).

10.3.3 Contractor shall erect and maintain, as required by existing conditions and performance of the Contract, reasonable safeguards for safety and protection of persons and property, including posting danger signs and other warnings against hazards, promulgating safety regulations, and notifying owners and users of adjacent sites and utilities.

10.3.4 Contractor shall designate responsible member of Contractor's organization at site whose duty is prevention of accidents. This person will be Contractor’s Superintendent unless otherwise designated by Contractor in writing to City Engineer.

10.3.5 Contractor shall prevent windblown dust and may not burn or bury trash debris or waste products on-site. Contractor shall prevent environmental pollution, including but not limited to particulates, gases and noise, as a result of the Work.

10.3.6 When use or storage of hazardous materials or equipment, or unusual methods are necessary for execution of the Work, Contractor shall exercise utmost care and carry on the activities under supervision of properly qualified personnel.

10.3.7 Contractor shall promptly remedy damage and loss to property referred to in Subparagraphs 10.3.1.2 and 10.3.1.3, caused in whole or in part by Contractor, or Subcontractors, which is not covered by insurance required by the Contract. Contractor is not required to remedy damage or loss attributable to the City, Design Consultant, or other contractors.

10.4 *EMERGENCIES*

10.4.1 In emergencies affecting safety of persons or property, Contractor shall act at Contractor's discretion to prevent imminent damage, injury, or loss. Additional compensation or extension of time claimed by Contractor because of emergencies are determined as provided in Article 7.

ARTICLE 11 - INSURANCE AND BONDS

11.1 *GENERAL INSURANCE REQUIREMENTS*

11.1.1 With no intent to limit Contractor's liability under indemnification provisions set forth in Paragraphs 3.25 and 3.26, Contractor shall provide and maintain in full force and effect during term of the Contract and all extensions and amendments

thereto, at least the following insurance and available limits of liability.

11.1.2 If any of the following insurance is written as “claims made” coverage and the City is required to be carried as additional insured, then Contractor's insurance shall include a two-year extended discovery period after last date that Contractor provides any work under the Contract.

11.1.3 Aggregate amounts of coverage, for purposes of the Contract, are agreed to be amounts of coverage available during fixed 12-month policy period.

11.2 *INSURANCE TO BE PROVIDED BY CONTRACTOR*

11.2.1 *Risks and Limits of Liability:* Contractor shall provide at a minimum insurance coverage and limits of liability set out in Table 1.

11.2.1.1 If Limit of Liability for Excess Coverage is $2,000,000 or more, Limit of Liability for Employer's Liability may be reduced to $500,000.

11.2.2 *Form of Policies:* Insurance may be in one or more policies of insurance, form of which is subject to approval by City Engineer. It is agreed, however, that nothing City Engineer does or fails to do with regard to insurance policies relieves Contractor from its duties to provide required coverage and City Engineer's actions or inactions will never be construed as waiving the City’s rights.

11.2.3 *Issuers of Policies:* Issuer of any policy shall have:

.1 a Certificate of Authority to transact business in Texas, or

.2 have a Best's rating of at least B+ and a Best's Financial Size Category of Class VI or better, according to the most current edition of Best's Key Rating Guide, and the issuer must be an eligible nonadmitted insurer in the State of Texas.

Each insurer is subject to approval by City Engineer in City Engineer’s sole discretion as to conformance with these requirements, pursuant to Paragraph 11.2.2.

11.2.4 *Insured Parties:* The City shall be an Additional Insured under this Contract. Each policy, except those for Workers' Compensation and Owner's and Contractor's Protective Liability, must name the City, its officers, agents, and employees as Additional Insured parties on original policy and all renewals or replacements during term of the Contract. The City's status as Additional Insured under Contractor's insurance does not extend to instances of sole negligence of the City unmixed with any fault of Contractor.

11.2.5 *Deductibles:* Contractor assumes and bears any claims or losses to extent of deductible amounts and waives any claim it may ever have for same against the City, its officers, agents, or employees.

11.2.6 *Cancellation:* Contractor shall notify the Director in writing 30 days prior to any cancellation or material change to Contractor’s insurance coverage. Within the 30 day period, Contractor shall provide other suitable policies in lieu of those about to be canceled or nonrenewed so as to maintain in effect the required coverage. If Contractor does not comply with this requirement, the City Engineer, at his or her sole discretion, may:

.1 immediately suspend Contractor from any further performance under this Contract and begin procedures to terminate for default, or

.2 purchase the required insurance with City funds and deduct the cost of the premiums from amounts due to Contractor under this Contract.

11.2.7 *Subrogation:* Contractor waives any claim or right of subrogation to recover against the City, its officers, agents, or employees. Each policy, except professional liability, must contain an endorsement waiving such claim.

11.2.8 *Endorsement of Primary Insurance:* Each policy, except Workers’ Compensation policies, must contain an endorsement that the policy is primary insurance to any other insurance available to additional insured with respect to claims arising hereunder.

11.2.9 *Liability for Premium:* Contractor is solely responsible for payment of all insurance premium requirements hereunder and the City is not obligated to pay any premiums.

11.2.10 *Additional Requirements for Workers' Compensation Insurance Coverage:* Contractor shall, in addition to meeting the obligations set forth in Table 1, maintain throughout the term of the Contract Workers' Compensation coverage as required by statute, and Contractor shall specifically comply with requirements set forth in Paragraph 11.2.10. The definitions set out below shall apply only for purposes of this Paragraph 11.2.10.

11.2.10.1 Definitions:

.1 *Certificate of Coverage:* A copy of certificate of insurance, or coverage agreement (TWCC-81, TWCC-82, TWCC-83, or TWCC-84), showing statutory Workers' Compensation insurance coverage for Contractor's, Subcontractor's, or Supplier's employees providing services for the duration of the Contract.

.2 *Duration of the Work:* Includes the time from Date of Commencement of the Work until Contractor's work under the Contract has been completed and accepted by City Council.

.3 *Persons providing services for the Work (Subcontractor in Texas Labor Code § 406.096):* includes all persons or entities performing all or part of services Contractor has undertaken to perform on the Work, regardless of whether that person contracted directly with Contractor and regardless of whether that person has employees. This includes, without limitation, independent contractors, subcontractors, leasing companies, motor carriers, owner-operators, employees of the entity, or employees of entity which furnishes persons to provide services on the Work. Services include, without limitation, providing, hauling, or delivering equipment or materials, or providing labor, transportation, or other service related to the Work. Services do not include activities unrelated to the Work, such as food/beverage vendors, office supply deliveries, and delivery of portable toilets.

11.2.10.2 Contractor shall provide coverage, based on proper reporting of classification codes and payroll amounts and filing of coverage agreements, which meets the statutory requirements of TEX. LAB. CODE ANN., Section 401.011(44) for employees of Contractor providing services on the Work, for duration of the Work.

11.2.10.3 Contractor shall provide a Certificate of Coverage to the City prior to being awarded the Contract.

11.2.10.4 If coverage period shown on Contractor's original Certificate of Coverage ends during duration of the Work, Contractor shall file new Certificate of Coverage with the City showing that coverage has been extended.

11.2.10.5 Contractor shall obtain from each person providing services on the Work, and provide to City Engineer:

.1 Certificate of Coverage, prior to that person beginning work on the Work, so the City will have on file Certificates of Coverage showing coverage for all persons providing services on the Work; and

.2 no later than seven days after receipt by Contractor, new Certificate of Coverage showing extension of coverage, if coverage period shown on current Certificate of Coverage ends during the duration of the Work.

11.2.10.6 Contractor shall retain all required Certificates of Coverage for the duration of the Work and for one year thereafter.

11.2.10.7 Contractor shall notify City Engineer in writing by certified mail or personal delivery, within 10 days after Contractor knew or should have known, of any change that materially affects provision of coverage of any person providing services on the Work.

11.2.10.8 Contractor shall post on-site a notice, in text, form and manner prescribed by Texas Workers' Compensation Commission, informing all persons providing services on the Work that they are required to be covered, and stating how person may verify coverage and report lack of coverage.

11.2.10.9 Contractor shall contractually require each person with whom it contracts to provide services on the Work to:

.1 provide coverage, based on proper reporting of classification codes, payroll amounts and filing of any coverage agreements, which meets statutory requirements of TEX. LAB. CODE ANN., Section 401.011(44) for all its employees providing services on the Work, for the duration of the Work;

.2 provide to Contractor, prior to that person's beginning work on the Work, a Certificate of Coverage showing that coverage is being provided for all employees of the person providing services on the Work, for the duration of the Work;

.3 provide Contractor, prior to the end of the coverage period, a new Certificate of Coverage showing extension of coverage, if the coverage period shown on the current Certificate of Coverage ends during the duration of the Work;

.4 obtain from each other person with whom it contracts, and provide to Contractor: (1) Certificate of Coverage, prior to other person's beginning work on the Work; and (2) new Certificate of Coverage showing extension of coverage, prior to end of coverage period, if coverage period shown on the current Certificate of Coverage ends during duration of the Work.

.5 retain all required Certificates of Coverage on file for the duration of the Work and for one year thereafter;

.6 notify City Engineer in writing by certified mail or personal delivery within 10 days after person knew, or should have known, of change that materially affects provision of coverage of any person providing services on the Work; and

.7 contractually require each person with whom it contracts to perform as required by Paragraphs 11.2.10.1 through 11.2.10.7, with Certificates of Coverage to be provided to person for whom they are providing services.

11.2.10.10 By signing the Contract or providing or causing to be provided a Certificate of Coverage, Contractor is representing to the City that all employees of Contractor who will provide services on the Work will be covered by Workers' Compensation coverage for the duration of the Work, that coverage will be based on proper reporting of classification codes and payroll amounts, and that all coverage agreements will be filed with appropriate insurance carrier. Contractor is not allowed to self-insure Workers' Compensation. Contractor may be subject to administrative penalties, criminal penalties, civil penalties, or other civil actions for providing false or misleading information.

11.2.10.11 Contractor's failure to comply with Paragraph 11.2.10 is a breach of the Contract by Contractor, which entitles the City to declare the Contract void if Contractor does not remedy breach within 10 days after receipt of notice of breach from City Engineer.

11.2.11 *Subcontractor Insurance Requirements:* Contractor shall require Subcontractors and Suppliers to obtain Commercial General Liability, Workers' Compensation, Employer's Liability and Automobile Liability coverage that meets all the requirements of Paragraph 11.2. The amount must be commensurate with the amount of the subcontract, but not less than $500,000 per occurrence. Contractor shall require all Subcontractors with whom it contracts directly, whose subcontracts exceed $100,000, to provide proof of Commercial General Liability and Automobile Liability insurance coverage meeting the above requirements. Contractor shall comply with all requirements set out under Paragraph 11.2.10 as to Workers' Compensation Insurance for all Subcontractors and Suppliers.

TABLE 1
REQUIRED COVERAGE

(Coverage)	(Limit of Liability)
.1 Workers' Compensation	Statutory Limits for Workers' Compensation
.2 Employer's Liability	Bodily Injury by Accident $1,000,000 (each accident) Bodily Injury by Disease $1,000,000 (policy limit) Bodily Injury by Disease $1,000,000 (each employee)
.3 Commercial General Liability: Including Contractor's Protective, Broad Form Property Damage, Contractual Liability, Explosion, Underground and Collapse, Bodily Injury, Personal Injury, Products, and Completed Operations (for a period of one year following completion of the Work).	Combined single limit of $1,000,000 (each occurrence), subject to general aggregate of $1,000,000; Products and Completed Operations $1,000,000 aggregate.
.4 Owner's and Contractor's Protective Liability	$1,000,000 combined single limit each Occurrence/ aggregate
.5 Installation Floater (Unless alternative coverage approved by City Attorney)	Value of stored material or equipment, listed on Certificates of Payments, but not yet incorporated into the Work
.6 Automobile Liability Insurance: (For automobiles furnished by Contractor in course of his performance under the Contract, including Owned, Non-owned, and Hired Auto coverage)	$1,000,000 combined single limit each occurrence for (1) Any Auto or (2) All Owned, Hired, and Non-Owned Autos
.7 Excess Coverage	$1,000,000 each occurrence/combined aggregate in excess of limits specified for Employer's Liability, Commercial General Liability, and Automobile Liability
Aggregate Limits are per 12-month policy period unless otherwise indicated.	

11.3 *PROOF OF INSURANCE*

11.3.1 Prior to commencing services and at time during the term of the Contract, Contractor shall furnish City Engineer with Certificates of Insurance, along with Affidavit from Contractor confirming that Certificate accurately reflects insurance coverage that is available during term of the Contract. If requested in writing by City Engineer, Contractor shall furnish City Engineer with certified copies of Contractor's actual insurance policies. Failure of Contractor to provide certified copies, as requested, may be deemed, at City Engineer's or City Attorney's discretion, a material breach of the Contract.

11.3.2 Notwithstanding the proof of insurance requirements, Contractor shall continuously maintain in effect required insurance coverage set forth in Paragraph 11.2. Failure of Contractor to comply with this requirement does constitute a material breach by Contractor allowing the City, at its option, to immediately suspend or terminate work, or exercise any other remedy allowed under the Contract. Contractor agrees that the City has not waived or is not estopped to assert a material breach of the Contract because of any acts or omissions by the City regarding its review or non-review of insurance documents provided by Contractor, its agents, employees, or assigns.

11.3.3 Contractor shall provide updated certificates of insurance to the Director upon request. The Contractor shall be responsible for delivering a current certificate of insurance in the proper form to the Director as long as Contractor is required to furnish insurance coverage under Paragraph 11.2.

11.3.4 Every certificate of insurance Contractor delivers in connection with this Contract shall

.1 be less than 12 months old;

.2 include all pertinent identification information for the Insurer, including the company name and address, policy

number, NAIC number or AMB number, and authorized signature;

.3 include in the Certificate Holder Box the Project name and reference numbers, contractor's email address, and indicates the name and address of the Project Manager;

.4 include the Contractor's email address in the Certificate Holder Box;

.5 include the Project reference numbers on the City address so the Project reference number is visible in the envelope window; and

.6 be appropriately marked to accurately identify all coverages and limits of the policy, effective and expiration dates, and waivers of subrogation in favor of the City for Commercial General Liability, Automobile Liability, and Worker's Compensation/Employers' Liability.

11.4 *PERFORMANCE AND PAYMENT BONDS*

11.4.1 For Contracts over the value of $25,000, Contractor shall provide Bonds on the City's standard forms covering faithful performance of the Contract and payment of obligations arising thereunder as required in the Contract pursuant to Chapter 2253 of the Government Code. The Bonds must be for 100 percent of Original Contract Price and in accordance with conditions stated on standard City Performance and Payment Bond and Statutory Payment Bond forms. Bonds may be obtained from Contractor's usual source and cost for the Bonds are included in Contract Price.

11.5 *MAINTENANCE BONDS*

11.5.1 *One-year Maintenance Bond:* Contractor shall provide Bond on standard City One-year Maintenance Bond form, providing for Contractor's correction, replacement, or restoration of any portion of the Work which is found to be not in compliance with requirements of the Contract during one-year correction period required in Paragraph 12.2. The Maintenance Bond must be for 100 percent of the Original Contract Price.

11.6 *SURETY*

11.6.1 A Bond that is given or tendered to the City pursuant to the Contract must be executed by a surety company that is authorized and admitted to write surety Bonds in the State of Texas.

11.6.2 If a Bond is given or tendered to the City pursuant to the Contract in an amount greater than 10 percent of Surety's capital and surplus, Surety shall provide certification that Surety has reinsured that portion of the risk that exceeds 10 percent of Surety's capital and surplus. The reinsurance must be with one or more reinsurers who are duly authorized, accredited, or trusted to do business in the State of Texas. The amount reinsured by reinsurer may not exceed 10 percent of reinsurer's capital and surplus. The amount of allowed capital and surplus must be based on information received from State Board of Insurance.

11.6.3 If the amount of a Bond is greater than $100,000, Surety shall:

.1 also hold certificate of authority from the United States Secretary of Treasury to qualify as surety on obligations permitted or required under federal law; or,

.2 Surety may obtain reinsurance for any liability in excess of $100,000 from reinsurer that is authorized and admitted as a reinsurer in the State of Texas and is the holder of a certificate of authority from the United States Secretary of the Treasury to qualify as surety or reinsurer on obligations permitted or required under federal law.

11.6.4 Determination of whether Surety on the Bond or the reinsurer holds a certificate of authority from the United States Secretary of the Treasury is based on information published in Federal Register covering the date on which Bond was executed.

11.6.5 Each Bond given or tendered to the City pursuant to the Contract must be on City forms with no changes made by Contractor or Surety, and must be dated, executed, and accompanied by power of attorney stating that the attorney in fact executing such the bond has requisite authority to execute such Bond. The Bonds must be dated and must be no more than 30 days old.

11.6.6 Surety shall designate in its Bond, power of attorney, or written notice to the City, an agent resident in Harris County to whom any requisite notices may be delivered and on whom service of process may be had in matters arising out of the suretyship.

11.6.7 Contractor shall furnish information to a payment bond beneficiary as required by TEX. GOV'T CODE ANN. CH. 2253.

11.7 *DELIVERY OF BONDS*

11.7.1 Contractor shall deliver required Bonds to the City within time limits stated in Notice of Intent to Award and prior to Date of Commencement of the Work.

ARTICLE 12 - UNCOVERING AND CORRECTION OF THE WORK

12.1 *UNCOVERING OF THE WORK*

12.1.1 If a portion of the Work has been covered which City Engineer has not specifically requested to observe prior to its being covered, City Engineer may request to see such work and it must be uncovered by Contractor. If such work is in accordance with the Contract, the costs of uncovering and covering such work are charged to the City by Change Order. If such work is not in accordance with the Contract, Contractor shall pay for uncovering and shall correct the nonconforming Work promptly after receipt of Notice of Noncompliance to do so.

12.2 *CORRECTION OF THE WORK*

12.2.1 Contractor shall promptly correct or remove work rejected by City Engineer or work failing to conform to requirements of the Contract, whether observed before or after Date of Substantial Completion and whether fabricated, Installed, or completed.

12.2.2 Contractor bears costs of correcting the rejected or nonconforming work including additional testing and inspections, and compensation for Design Consultant’s services and expenses made necessary thereby.

12.2.3 If within one year after Date of Substantial Completion, or after date for commencement of warranties established under Paragraph 9.9.5 or by other applicable special warranty required by the Contract, whichever is later in time, any of the Work is found not to be in accordance with the requirements of the Contract, Contractor shall correct such work promptly after receipt of Notice of Noncompliance to do so.

12.2.4 One-year correction period for portions of the Work completed after Date of Substantial Completion will begin on the date of acceptance of that portion of the Work. This obligation under this Paragraph survives acceptance of the Work under the Contract and termination of the Contract.

12.2.5 The one-year correction period does not establish a duration for the Contractor’s general warranty under Paragraph 3.12. The City retains the right to recover damages from the Contractor as long as may be permitted by the applicable statute of limitations.

12.2.6 If Contractor does not proceed with correction of the nonconforming work within time fixed by Notice of Noncompliance, the City may correct nonconforming work or remove nonconforming work and store salvageable Products at Contractor's expense. Contractor shall pay the costs of correction of nonconforming work and removal and storage of salvageable Products to the City. If Contractor does not pay costs of the correction or removal and storage within 10 days after written notice, the City may sell the Products at auction or at private sale. The City will account for proceeds thereof after deducting costs and damages that would have been borne by Contractor, including compensation for services of Design Consultant and necessary expenses. If the proceeds of sale do not cover costs which Contractor should have borne, Contractor shall pay the value of the deficiency to the City.

12.2.7 Contractor bears cost of correcting work originally installed by Contractor, the City, or by separate contractors and damaged by Contractor's correction or removal of Contractor's work.

12.3 *ACCEPTANCE OF NONCONFORMING WORK*

12.3.1 If City Engineer prefers to accept work which is not in accordance with requirements of the Contract, City Engineer may do so only by issuance of Change Order, instead of requiring its removal and correction. City Engineer will determine Contract Price reduction. The reduction will become effective even if final payment has been made.

ARTICLE 13 - MISCELLANEOUS PROVISIONS

13.1 *GOVERNING LAWS*

13.1.1 The Contract is subject to the laws of the State of Texas, the City Charter and Ordinances, the laws of the federal government of the United States, and all rules and regulations of any regulatory body or officer having jurisdiction.

13.1.2 Venue for any litigation relating to the Contract is Harris County, Texas.

13.2 *SUCCESSORS*

13.2.1 The Contract binds and benefits the Parties and their legal successors and permitted assigns; however, this Paragraph 13.2.1 does not alter the restrictions on assignment and disposal of assets set out in Paragraph 13.3.1. The Contract does not create any personal liability on the part of any officer or agent of the City.

13.3 *BUSINESS STRUCTURE AND ASSIGNMENTS*

13.3.1 Contractor may not assign the Contract at law or otherwise, or dispose of all or substantially all of its assets without City Engineer's prior written consent. Nothing in this Section, however, prevents the assignment of accounts receivable or the creation of a security interest as described in §9.406 of the Texas Business & Commerce Code. In the case of such an assignment, Contractor shall immediately furnish the City with proof of the assignment and the name, telephone number, and address of the assignee and a clear identification of the fees to be paid to the assignee.

13.3.2 Any series, as defined by the TEX. BUS. ORG. CODE ANN., affiliate, subsidiary, or successor to which Contractor assigns or transfers assets shall join in privity and be jointly and severally liable under this Contract.

13.4 *WRITTEN NOTICE*

13.4.1 All notices required or permitted by the Contract must be in writing and must be effected by hand delivery; registered or certified mail, return receipt requested; or facsimile with confirmation copy mailed to receiving Party. Notice is sufficient if made or addressed with proper postage to the address stated in the Agreement for each Party ("Notice Address") or faxed to the facsimile number stated in the Agreement for each Party. The notice is deemed delivered on the earlier of:

.1 the date the Notice is actually received;
.2 the third day following deposit in a United States Postal Service post office or receptacle; or
.3 the date the facsimile is sent unless the facsimile is sent after 5:00 p.m. local time of the recipient and then it is deemed received on the following day.

Any Party may change its Notice Address or facsimile number at any time by giving written notice of the change to the other Party in the manner provided for in this Paragraph at least 15 days prior to the date the change is affected.

13.5 *RIGHTS AND REMEDIES*

13.5.1 Duties and obligations imposed by the Contract and rights and remedies available thereunder are in addition to and not a limitation of duties, obligations, rights, and remedies otherwise imposed or available by law.

13.5.2 No act or failure to act by the City or Contractor is a waiver of rights or duties afforded them under the Contract, nor is the act or failure to act constitute approval of or acquiescence in a breach of the Contract. No waiver, approval or acquiescence is binding unless in writing and, in the case of the City, signed by City Engineer.

13.6 *TESTS AND INSPECTIONS*

13.6.1 Contractor shall give City Engineer, Construction Manager, and Design Consultant timely notice of the time and place where tests and inspections are to be made. Contractor shall cooperate with inspection and testing personnel to facilitate required inspections or tests.

13.6.2 The City will employ and pay for services of an independent testing laboratory to perform inspections or acceptance tests required by the Contract except:

.1 inspections or tests covered by Paragraph 13.6.3;
.2 those otherwise specifically provided in the Contract; or
.3 costs incurred in connection with tests or inspections conducted pursuant to Paragraph 12.2.2.

13.6.3 Contractor is responsible for and shall pay all costs in connection with inspection or testing required in connection with City Engineer's acceptance of a Product to be incorporated into the Work, or of materials, mix designs, or equipment submitted for approval prior to Contractor's purchase thereof for incorporation into the Work.

13.6.4 Neither observations by the City, Construction Manager, or Design Consultant, nor inspections, tests, or approvals by others, relieves Contractor from Contractor's obligations to perform the Work in accordance with the Contract.

13.7 *INTEREST*

13.7.1 No interest will accrue on late payments by the City except as provided under Chapter 2251 of the Government Code.

13.8 *PARTIES IN INTEREST*

13.8.1 The Contract does not bestow any rights upon any third party, but binds and benefits the Parties only.

13.9 *ENTIRE CONTRACT*

13.9.1 The Contract merges the prior negotiations and understandings of the Parties and embodies the entire agreement of the Parties. No other agreements, assurances, conditions, covenants, express or implied, or other terms of any kind, exist between the Parties regarding the Contract.

13.10 *WRITTEN AMENDMENT*

13.10.1 Changes to the Contract that cannot be effected by Modifications, must be made by written amendment, which will not be effective until approved by City Council.

13.11 *COMPLIANCE WITH LAWS*

13.11.1 Contractor shall comply with the Americans with Disabilities Act of 1990 as amended (ADA) and Texas Architectural Barriers Act and all regulations relating to either statute.

13.11.2 Contractor shall comply with all applicable federal, state, and city laws, rules and regulations.

13.12 *SEVERABILITY*

13.12.1 If any part of the Contract is for any reason found to be unenforceable, all other parts remain enforceable to the extent permitted by law.

ARTICLE 14 - TERMINATION OR SUSPENSION OF THE CONTRACT

14.1 *TERMINATION BY THE CITY FOR CAUSE*

14.1.1 Each of the following acts or omissions of Contractor or occurrences shall constitute an "Event of Default" under the Contract:

.1 Contractor refuses or fails to supply enough properly skilled workers or proper Products;

.2 Contractor disregards laws, ordinances, rules, regulations, or orders of a public authority having jurisdiction;

.3 Contractor is guilty of material breach of any duty or obligation of Contractor under the Contract;

.4 Contractor has had any other contract with the City terminated for cause at any time subsequent to the effective date of the Contract as set out in the Agreement; or

.5 Contractor fails to utilize Ultra Low Sulfur Diesel Fuel, as required in Paragraph 3.9.1.1.

14.1.2 If an Event of Default occurs, City Engineer may, at his option and without prejudice to any other rights or remedies which the City may have, deliver a written notice to Contractor and Surety describing the Event of Default and giving the Contractor 10 days to cure the Event of Default. If after the cure period, Contractor has failed or refused to cure the Event of Default, then City Engineer may deliver a second written notice to Contractor giving notice of the termination of the Contract or of the termination of Contractor's performance under the Contract ("Notice of Termination"). If City Engineer issues a Notice of Termination, then City Engineer may, subject to any prior rights of Surety and any other rights of the City under the Contract or at law:

.1 request that Surety complete the Work; or

.2 take possession of the site and all materials, equipment, tools, and construction equipment and machinery on the site owned by Contractor; and

.3 finish the Work by whatever reasonable method City Engineer may deem expedient.

14.1.3 After Contractor's receipt of a Notice of Termination, and except as otherwise directed in writing by City Engineer, Contractor shall:

.1 stop the Work on the date and to the extent specified in the Notice of Termination;

.2 place no further orders or subcontracts for Products or services;

.3 terminate all orders and subcontracts to the extent that they relate to performance of work terminated;

.4 assign to the City, in the manner, at the times, and to the extent directed by City Engineer, all rights, title, and interest of Contractor, under the terminated supply orders and subcontracts. The City may settle or pay claims arising out of termination of the orders and subcontracts;

.5 settle all outstanding liabilities and all claims arising out of the termination of supply orders and subcontracts with approval of City Engineer;

.6 take action as may be necessary, or as City Engineer may direct, for protection and preservation of property related to the Work that is in possession of Contractor, and in which the City has or may acquire an interest; and

.7 secure the Work in a safe state before leaving the site, providing any necessary safety measures, shoring, or other devices.

14.1.4 If the City terminates the Contract or terminates Contractor's performance under the Contract for any one or more of the reasons stated in Paragraph 14.1.1, Contractor may not receive any further payment until the Work is complete, subject to Paragraph 14.1.5.

14.1.5 If the unpaid balance of Contract Price exceeds the costs of finishing the Work, including liquidated damages and other amounts due under the Contract, the balance will be paid to Contractor. If the costs of finishing the Work exceed the unpaid balance, Contractor shall, within 10 days of receipt of written notice setting out the amount of the excess costs, pay the difference to the City. The amount to be paid to Contractor or the City will be certified by City Engineer in writing, and this obligation for payment shall survive termination of the Contract or termination of Contractor's performance under the Contract. Termination of the Contractor for cause shall not relieve the Surety from its obligation to complete the project.

14.2 *TERMINATION BY THE CITY FOR CONVENIENCE*

14.2.1 City Engineer may, without cause and without prejudice to other rights or remedies of the City, give Contractor and Surety a Notice of Termination with a seven days written notice.

14.2.2 After receipt of the Notice of Termination, and except as otherwise approved by City Engineer, Contractor shall conform to requirements of Paragraph 14.1.3.

14.2.3 After receipt of the Notice of Termination, Contractor shall submit to the City its termination Claim, in forms required by City Engineer. The Claim will be submitted to the City promptly, but no later than six months from the effective date of termination, unless one or more extensions are granted by City Engineer in writing. If Contractor fails to submit its termination Claim within the time allowed, in accordance with Paragraph 14.2.4, City Engineer will determine, on the basis of available information, the amount, if any, due to Contractor because of termination, and City Engineer's determination is final and binding on the Parties. The City will then pay to Contractor the amount so determined.

14.2.4 City Engineer will determine, on the basis of information available to City Engineer, the amount due, if any, to Contractor for the termination as follows:

.1 Contract Price for all work performed in accordance with the Contract up to the date of termination determined in the manner prescribed for monthly payments in Article 9, except no retainage is withheld by the City either for payment determined by percentage of completion or for materials and equipment delivered to the site, in storage or in transit.

.2 Reasonable termination expenses, including costs for settling and paying Subcontractor and Supplier claims arising out of termination of the Work, reasonable cost of preservation and protection of the City's property after termination, if required, and the cost of Claim preparation. Termination expenses do not include field or central office overhead, salaries of employees of Contractor, or litigation costs, including attorneys' fees.

No amount is allowed for anticipated profit or central office overhead on uncompleted work, or any cost or lost profit for other business of Contractor alleged to be damaged by the termination.

14.2.5 Contractor shall promptly remove from the site any construction equipment, tools, and temporary facilities, except the temporary facilities which City Engineer may wish to purchase and retain.

14.2.6 Contractor shall cooperate with City Engineer during the transition period.

14.2.7 The City will take possession of the Work and materials delivered to the site, in storage, or in transit, as of date or dates specified in the Notice of Termination, and is responsible for maintenance, utilities, security, and insurance, as stated in Notice of Termination.

14.3 *SUSPENSION BY THE CITY FOR CONVENIENCE*

14.3.1 City Engineer may, without cause, after giving Contractor and Surety 24-hour prior written

notice, order Contractor to suspend, delay, or interrupt the Work in whole or in part for a period of time as City Engineer may determine.

14.3.2 An adjustment will be made in Contract Time equivalent to the time of suspension.

14.3.3 Adjustment will be made to Contract Price for increases in the cost of performance of the Work, including profit on increased cost of performance caused by suspension, delay, or interruption of the Work in accordance with Paragraph 7.3. No adjustment will be made to the extent that:

.1 performance was, or would have been, suspended, delayed, or interrupted by another cause for which Contractor is responsible; or

.2 adjustment is made or denied under another provision of the Contract.

14.4 *TERMINATION BY CONTRACTOR*

14.4.1 Contractor may terminate the Contract if the Work is stopped for a period of 30 days through no act or fault of Contractor, directly related to one of these events:

.1 issuance of an order of a court or other public authority having jurisdiction;

.2 act of government, such as a declaration of national emergency which makes material unavailable; or

.3 if repeated suspensions, delays, or interruptions by the City as described in Paragraph 14.3 constitute, in the aggregate, more than 100 percent of the total number of days scheduled for completion, or 120 days in any 365-day period, whichever is less;

No termination will be effective for the above reasons if Contractor delivers written notice to City Engineer describing the reason for termination, giving the proposed termination date, and granting the City a reasonable opportunity to respond and cure any City default before termination is effective.

14.4.2 If the Contract is terminated pursuant to this Paragraph 14.4, Contractor shall comply with the requirements of Paragraphs 14.2.2 through 14.2.7.

END OF DOCUMENT

Document 00800

SUPPLEMENTARY CONDITIONS

The following Paragraphs amend and supplement the January 1, 2015 edition of General Conditions. Unaltered portions of General Conditions remain in effect.

ARTICLE 1 - GENERAL PROVISIONS:

1.1 *DEFINITIONS*: *Insert the following Paragraph and 1.1.23, and reorder the remaining definitions accordingly.*

1.1.23 *Good Faith Efforts*. Steps taken to achieve an MBE, WBE, SBE, or PDBE goal or other requirements which, by their scope, intensity, and usefulness, demonstrate the bidder's responsiveness to fulfill the business opportunity objective, as well as the Contractor's responsibility to put forth measures to meet or exceed the MBE, WBE, SBE, or PDBE goal (Contract Goal). These steps apply from before a contract's award, through its duration, and after its conclusion, in the event the Contractor has been unsuccessful in meeting the Contract Goal. These efforts are required whether a Goal Oriented Contract or a Regulated Contract, as defined in the Office of Business Opportunity's Policy & Procedures Manual, available at http://www.houstontx.gov/obo.

ARTICLE 3 - THE CONTRACTOR

3.5 *LABOR*: *Insert the following Paragraphs, 3.5.3.1.1, 3.5.3.1.2 and3.5.3.1.3.*

3.5.3.1.1 If the Original Contract Price is greater than One Million Dollars, Contractor shall make Good Faith Efforts to comply with the City ordinances regarding Minority Business Enterprises (MBE), Women Business Enterprises (WBE), Persons with Disabilities Business Enterprises (PDBE) and Small Business Enterprise (SBE) participation goals which are as follows:

.1 the MBE goal is 12% percent,

.2 the WBE goal is 7% percent, and

.3 the PDBE goal is 0% percent.

.4 The bidder may substitute SBE participation of no more than four percent of the MBE goal, the WBE goal, or portions of the MBE Goal and WBE Goal.

3.5.3.1.2 The MBE, WBE, PDBE, and SBE goals are specific to this Agreement. The Contractor shall make reasonable efforts to achieve these goals.

3.5.3.1.3 Failure by Contractor to comply with the goals for MBE, WBE, SBE, or PDBE is a material breach of the Agreement, which may result in termination of the Agreement, or such other remedy permitted as the City deems appropriate.

ARTICLE 8 - TIME

8.1 *PROGRESS AND COMPLETION: Add the following Paragraph 8.1.6.1.*

8.1.6.1 Contractor shall credit the City by Change Order for inspection services for overtime work or work performed on Sundays or Legal Holidays. The amount Contractor credits the City will be [$50.00 per hour] per inspector for inspection services.

ARTICLE 9 - PAYMENTS AND COMPLETION

9.12 *LIQUIDATED DAMAGES*: *Insert the following Paragraph 9.12.1.1.*

9.12.1.1 The amount of liquidated damages payable by Contractor or Surety for each and every day of delay beyond Contract Time, are $800.00 per day.

ARTICLE 11 - INSURANCE AND BONDS

11.5 *MAINTENANCE BONDS: Insert the following Paragraph 11.5.2.*

11.5.2 One-year Surface Correction Bond: Contractor shall provide, on the City standard form, an additional One-Year Bond in an amount equal to four percent of the Original Contract Price or cost of repair. Bond shall provide for Contractor's correction, replacement, or restoration of backfill or subsurface and surface work not in accordance with the Contract, within one year from the date the One-Year Maintenance Bond has expired.

END OF DOCUMENT

Document 00805

EQUAL EMPLOYMENT OPPORTUNITY PROGRAM REQUIREMENTS
(City of Houston Information Requirements
for the Successful Bidder on All Construction Contracts)

DOCUMENTS THAT MUST BE SIGNED AND RETURNED TO THE CITY OF HOUSTON PRIOR TO FINAL EXECUTION OF CONTRACT

Certification by Bidder Regarding Equal Employment Opportunity EEO-3

Total Work Force Composition of the Company,..... EEO-6
or in lieu thereof, a copy of the latest Equal Employment Opportunity Commission's EEO-1 form (This information is required only if the Contractor has a work force of 50 or more people and the Contract is $50,000 or more.)

Company's Equal Employment Opportunity Compliance Program EEO-7

INFORMATION THAT MUST BE SUPPLIED DURING THE COURSE OF THE WORK

Certification By Proposed Subcontractor Regarding
Equal Employment Opportunity EEO-26

Certification by Proposed Material Suppliers, Lessors,and
Professional Service Providers Regarding Equal Employment Opportunity..... EEO-29

PLEASE COMPLETE PAGES EEO-3 THROUGH EEO-7 AND MAIL TO:

City of Houston
Mayor's Office of Business Opportunity
Contract Compliance Section
611 Walker, 7th Floor
Houston, Texas 77002
Attention: Director

The remainder of the reports can be mailed at the appropriate time.

EQUAL EMPLOYMENT OPPORTUNITY PROGRAM REQUIREMENTS

The following are Equal Employment Opportunity requirements to be met and documents to be submitted to:

Mayor's Office of Business Opportunity
Contract Compliance Section
611 Walker, 7th Floor
Houston, Texas 77002

Under the conditions and terms of all City construction contracts, the prime contractor is responsible for all Equal Employment Opportunity compliance, including subcontractor compliance.

EQUAL EMPLOYMENT OPPORTUNITY FORMS (EEO Forms)

These forms are submitted by the prime contractors at the beginning of the Project and as requested:

- EEO Forms 3, 6, and 7, by prime contractors

This form is submitted by all subcontractors before they begin work on the project:

- EEO Form 26 by subcontractors

This form is submitted by all suppliers, lessors, or professional services providers before they begin work on the project:

- EEO Form 29

POSTING

The following poster should be clearly displayed on each job site, or in case of annual service agreements, in the Contractor's office:

Equal Employment Opportunity is the Law Poster

JOB SITE VISITS

Site visits will be made by a Contract Compliance Officer, who will make their presence known to the Project Manager, Supervisor, or Foreman, and will conduct interviews with employees on site.

PAYMENT AND EVALUATION

Upon completion of the Project, as part of the contract-awarding department's total clearance process, the Office of Business Opportunity's Contract Compliance Section must certify to the department that all EEO compliance requirements have been met.

CERTIFICATION BY BIDDER REGARDING
EQUAL EMPLOYMENT OPPORTUNITY

GENERAL

In accordance with Executive Order 11246 (30 F.R. 12319-25), the implementing rules and regulations thereof, and orders of the Secretary of Labor, a certification regarding Equal Opportunity is required of bidders or prospective contractors and their proposed subcontractors prior to the award of contracts or subcontracts.

CERTIFICATION OF BIDDER

Bidder's Name:_____

Address:_____

Telephone Number:_____ Fax :_____

Name of the Company's EEO Officer: _____

E-mail Address:_____

Web Page/URL Address:_____

IRS Employer Identification Number:_____

Work to be performed:_____

Project No: _____

1. Participation in a previous contract or subcontract.

   a. Bidder has participated in a previous contract or subcontract subject to the Equal Opportunity Clause. ☐ YES ☐NO

   b. Compliance reports were required to be filed in connection with such contract or subcontract. ☐YES ☐NO

   c. Bidder has filed all compliance reports required by Executive Orders 10925, 11114, 11246, or by regulations of the Equal Employment Opportunity Commission issued pursuant to Title VII of the Civil Rights Act of 1964. ☐ YES ☐NO

   d. If answer of Item c. is "No", please explain in detail on reverse side of this certification.

2. Dollar amount of bid:$ _____

3. Anticipated performance period in days: _____

4. Expected total number of employees to perform the proposed construction: _____

5. Nonsegregated facilities.

   a. Notice to prospective federally-assisted construction contractors

      (1) A Certification of Nonsegregated Facilities, as required by the May 9, 1967, Order (32 F.R. 7439, May 19, 1967) on Elimination of Segregated Facilities, by the Secretary of Labor, must be submitted to the recipient prior to the award of a federally-assisted construction contract exceeding $10,000 which is not exempt from the provisions of the Equal Opportunity Clause.

      (2) Contractors receiving federally-assisted construction contract awards exceeding $10,000 which are not exempt from the provisions of the Equal Opportunity Clause will be required to provide the forwarding of the following notice to prospective subcontractors for supplies and construction contracts where the subcontracts exceed $10,000 and are not exempt from the provisions of the Equal Opportunity Clause.

      The federally-assisted construction Contractor certifies that he/she does not maintain or provide any segregated facilities at any of his/her establishments, and does not permit employees to perform their services at any location, under his/her control, where segregated facilities are maintained. The federally-assisted construction Contractor certifies further that he/she will not maintain or provide segregated facilities at any of his/her establishments, and will not permit employees to perform their services at any location, under his/her control, where segregated facilities are maintained. The federally-assisted construction Contractor agrees that a breach of this certification is a violation of the Equal Opportunity Clause in this Contract. As used in this certification, the term "segregated facilities" means any waiting rooms, work areas, restrooms and washrooms, restaurants and other eating areas, time clocks, locker rooms and other storage or dressing areas, parking lots, drinking fountains, recreation or entertainment areas, transportation, and housing facilities provided for employees which are segregated by explicit directive or are in fact segregated on the basis of race, creed, color, or national origin because of habit, local custom, or otherwise. The federally-assisted construction Contractor agrees that (except where he/she has obtained identical certifications from proposed Subcontractors for specific time periods) he/she will obtain identical certifications in duplicate from proposed Subcontractors prior to the award of subcontracts exceeding $10,000 which are not exempt from the provisions of the Equal Opportunity Clause, and that he/she will retain the duplicate of such certifications in his/her files. The Subcontractor will include the original in his/her bid package.

6. Race or ethnic group designation of bidder. Enter race or ethnic group in appropriate box:

☐ White ☐ Black ☐ Hispanic

☐ Pacific Islander, Asian ☐ American Indian, Aleut.

7. Gender of Owner £ Male £ Female

REMARKS: _____

Certification - The information above is true and complete to the best of my knowledge and belief.

_____
Company Officer (Please Type)

_____ _____
Signature Date

NOTE: The penalty for making false statements in offers is prescribed in 18 U.S.C. 1001.

Total Work Force Composition of the Company

City of Houston, Affirmative Action Requirements for All Construction Contracts

	White		Black		Hispanic		Pacific Islander/ Asian		Alaska Native/ Amer Ind.		Total Persons		Total Minority		Total Female	
	M	F	M	F	M	F	M	F	M	F	M	F	M	F	M	F
Officials and Administrators																
Professionals																
Paraprofessionals																
Technicians																
Protective Service Workers																
Sales Workers																
Office and Clerical																
Skilled Craft Workers																
Operatives (Semi-skilled)																
Laborers (Unskilled)																
Service / Maintenance Workers																
Others																
Total																

This report includes all of the company's permanent work force. For description of job categories, see Pages CC-27 through CC-29.

Check One: [ ] **Contractor** [ ] **Subcontractor**

COMPANY: _____ **DATE:** _____

EQUAL EMPLOYMENT OPPORTUNITY COMPLIANCE PROGRAM FOR

_____

Name of Company

The Company's Office of Business Opportunity Program shall consist of documented good faith efforts to comply with the goals, timetables, and objectives set forth in the following Affirmative Action steps:

A. City of Houston's Specific Equal Employment Opportunity Policy and Clause as contained in City Council Ordinance No. 78-1538, passed August 9, 1978.

B. Notice of Requirement for Office of Business Opportunity to ensure Equal Employment Opportunity (Executive Order 11246).

C. Standard Federal Equal Employment Opportunity Construction Contract Specifications (Executive Order 11246).

Project: _____

_____
Company Officer (Please Type)

_____ _____
Signature Date

NOTE: The penalty for making false statements in offers is prescribed in 18 U.S.C. 1001.

SPECIAL PROVISIONS
SPECIFIC EQUAL EMPLOYMENT OPPORTUNITY POLICY

1. GENERAL

a. Equal employment opportunity requirements not to discriminate and to take affirmative action to assure equal employment opportunity are required by Executive Order 11246, as amended. The requirements set forth in these Special Provisions shall constitute the specific affirmative action requirements for Project activities under this Contract and shall supplement the notice of requirement for affirmative action to ensure equal employment opportunity and standard federal equal employment opportunity construction contract specifications.

b. The Contractor shall work with the City and the Federal Government in carrying out equal employment opportunity obligations and in their review of his/her activities under the Contract.

c. The prime Contractor and all Subcontractors holding subcontracts of $10,000 or more shall comply with the following minimum specific requirement activities of equal employment opportunity. The Contractor shall include these requirements in every subcontract of $10,000 or more with such modification of language as is necessary to make them binding on the Subcontractor.

2. EQUAL EMPLOYMENT OPPORTUNITY POLICY

The Contractor shall accept as his/her operating policy the following statement which is designed to further the provision of equal employment opportunity to all persons without regard to their race, age, color, religion, sex, or national origin, and to promote the full realization of equal employment opportunity through a positive continuing program:

It is the policy of this Company to assure that applicants are employed, and that employees are treated during employment, without regard to their race, religion, color, sex, or national origin. Such action shall include: employment, upgrading, demotion, or transfer; recruitment or recruitment advertising; layoff or termination; rates of pay or other forms of compensation; and selection for training, including apprenticeship.

3. EQUAL EMPLOYMENT OPPORTUNITY OFFICER

The Contractor shall designate and make known to the City contracting officers an equal employment opportunity officer (hereinafter referred to as the EEO Officer) who must be capable of effectively administering and promoting an active Contractor program of equal employment opportunity and who must be assigned adequate authority and responsibilities to do so.

4. DISSEMINATION OF POLICY

a. All members of the Contractor's staff who are authorized to hire, supervise, promote, and discharge employees, or who recommend such action, or who are substantially involved in such action, will be made fully cognizant of, and will implement the Contractor's equal employment opportunity policy and contractual responsibilities to provide equal employment opportunity in each grade and classification of employment. To ensure that the above agreement will be met, the following actions shall be taken as a minimum:

(1) Periodic meetings of supervisory and personnel office employees shall be conducted before the start of work and then not less often than once every six months, at which time the Contractor's equal employment opportunity policy and its implementation will be reviewed and explained. The meetings shall be conducted by the EEO Officer or other knowledgeable company official.

(2) All new supervisory or personnel office employees will be given a thorough indoctrination by the EEO Officer, or other knowledgeable company official, covering all major aspects of the Contractor's equal employment opportunity obligations, within 30 days following their reporting for duty with the Contractor.

(3) The EEO Officer or appropriate company official shall instruct all employees engaged in the direct recruitment of employees for the Project relative to the methods followed by the Contractor in locating and hiring minorities and females.

b. In order to make the Contractor's equal employment opportunity policy known to all employees, prospective employees, and potential sources of employees, i.e., schools, employment agencies, labor unions (where appropriate), college placement officers, etc., the Contractor shall take the following actions:

(1) Notices and posters setting forth the Contractor's equal employment opportunity policy shall be placed in areas readily accessible to employees, applicants for employment, and potential employees.

(2) The Contractor's equal employment opportunity policy and the procedures to implement such policy shall be brought to the attention of employees by means of meetings, employee handbooks, or other appropriate means.

5. RECRUITMENT

a. When advertising for employees, the Contractor shall include in all advertisements for employees the notation "An Equal Opportunity Employer". All such advertisements will be published in newspapers, or

other publications, having a large circulation among minority groups in the area from which the Project work force would normally be derived.

b. The Contractor shall, unless precluded by a valid bargaining agreement, conduct systematic and direct recruitment through public and private employee-referral sources likely to yield qualified minority-group applicants, including, but not limited to, State employment agencies, schools, colleges, minority-group organizations, and female recruitment agencies. To meet this requirement, the Contractor shall, through his/her EEO Officer, identify sources of potential minority and female employees, and establish with such identified sources procedures whereby such group applicants may be referred to the Contractor for employment consideration.

In the event the Contractor has a valid bargaining agreement providing for exclusive hiring hall referrals, he/she is expected to observe the provisions of that agreement to the extent that the system permits the Contractor's compliance with equal employment opportunity Contract provisions. (The U. S. Department of Labor has held that where implementation of such agreements has the effect of discriminating against minorities or women, or obligates the Contractor to do the same, such implementation violates Executive Order 11246 as amended).

c. The Contractor shall encourage his/her present employees to refer female or minority-group applicants for employment by posting appropriate notices or bulletins in areas accessible to all such employees. In addition, information and procedures with regard to referring such applicants will be discussed with employees.

6. PERSONNEL ACTIONS

a. Wage, working conditions, and employee benefits shall be established and administered, and personnel actions of every type, including hiring, upgrading, promotion, transfer, demotion, layoff and termination, shall be taken without regard to race, color, religion, sex, national origin, or age. The following procedures shall be followed:

(1) The Contractor shall conduct periodic inspections of Project sites to ensure that working conditions and employee facilities do not indicate discriminatory treatment of Project-site personnel.

(2) The Contractor shall periodically evaluate the spread of wages paid within each classification to determine any evidence of discriminatory wage practices.

(3) The Contractor shall periodically review selected personnel actions in depth to determine whether there is evidence of discrimination. Where evidence is found, the Contractor shall promptly take corrective action. If the review indicates that the discrimination may extend beyond the actions reviewed, such corrective action shall include all affected persons.

(4) The Contractor shall promptly investigate all complaints of alleged discrimination made in connection with his/her obligations under this Contract, shall attempt to resolve such complaints, and shall take appropriate corrective action. If the investigation indicates that the discrimination may affect persons other than the complainant, such corrective action shall include such other persons. Upon completion of each investigation, the Contractor shall inform every complainant of all avenues of appeal.

7. TRAINING AND PROMOTION

a. The Contractor shall assist in locating, qualifying, and increasing the skills of minority-group and women employees and applicants for employment.

b. Consistent with the Contractor's work force requirements and as permissible under Federal and State regulations, the Contractor shall make full use of training programs, i.e., apprenticeship and on-the-job training programs, for the geographical area of Contract performance.

c. The Contractor shall advise employees and applicants for employment of available training programs and entrance requirements for each.

d. The Contractor shall periodically review the training and promotion potential of minority-group and women employees and shall encourage eligible employees to apply for such training and promotion.

8. UNIONS

If the Contractor relies in whole or in part upon unions as a source of employees, he/she shall use his/her best efforts to obtain the cooperation of such unions to increase minority groups and women within the unions, and to effect referrals by such unions of minority and female employees. Actions by the Contractor, either directly or through a contractor's association acting as his/her agent, will include the procedures set forth below:

a. The Contractor shall use best efforts to develop, in cooperation with the unions, joint training programs aimed toward qualifying more minority-group members and women for membership in the unions and increasing the skills of minority-group employees and women so that they may qualify for higher-paying employment.

b. The Contractor shall use best efforts to incorporate an equal employment opportunity clause into all union agreements to the end that such unions will be contractually bound to refer applicants without regard to their race, color, religion, sex, national origin, or age.

c. The Contractor is to obtain information as to the referral practices and policies of the labor union, except that to the extent such information is within the exclusive possession of the labor union, and such labor union refuses to furnish such information to the Contractor, the Contractor shall so certify to the City and shall set forth what efforts have been made to obtain such information.

d. In the event the union is unable to provide the Contractor with a reasonable flow of minority and women referrals within the time limit set forth in the collective bargaining agreement, the Contractor shall, through independent recruitment efforts, fill the employment vacancies without regard to race, color, religion, age, sex, or national origin, making full efforts to obtain qualified and/or qualifiable minority group persons and women. (The U. S. Department of Labor has held that it shall be no excuse that the union with which the Contractor has a collective bargaining agreement providing for exclusive referral failed to refer minority employees.) In the event the union referral practice prevents the Contractor from meeting the obligations pursuant to Executive Order 11246, as amended, and these special provisions, such Contractor shall immediately notify the City.

9. SUBCONTRACTING

a. The Contractor shall use his/her best efforts to solicit bids from and to utilize minority-group and female subcontractors or subcontractors with meaningful minority-group and/or female representation among their employees.

b. The Contractor shall use his/her best efforts to assure Subcontractors' compliance with their equal employment opportunity obligations.

10. RECORDS AND REPORTS

a. The Contractor shall keep such records as are necessary to determine compliance with the Contractor's equal employment opportunity obligations. The records kept by the Contractor will be designed to indicate:

(1) The number of minority and non-minority group members and women employed in each work classification on the Project.

(2) The progress and efforts being made in cooperation with unions to increase employment opportunities for minorities and women (applicable only to contractors who rely in whole or in part on unions as a source of their work force).

(3) The progress and efforts being made in locating, hiring, training, qualifying, and upgrading minority and female employees.

(4) The progress and efforts being made in securing the services of female and minority subcontractors.

b. All records, including payrolls, must be retained for a period of three years following completion of the Contract work and shall be available at reasonable times and places for inspection by authorized representatives of the City and/or the appropriate federal agency.

CITY OF HOUSTON, TEXAS

EQUAL EMPLOYMENT OPPORTUNITY CLAUSE

Pursuant to City Council Ordinance No. 78-1538, passed August 9, 1978, all contracts entered into by the City of Houston involving the expenditure of $10,000 or more, shall incorporate the following Equal Employment Opportunity Clause:

1. The Contractor, Subcontractor, vendor, Supplier, or lessee shall not discriminate against any employee or applicant for employment because of race, religion, color, sex, national origin, or age. The Contractor, Subcontractor, vendor, Supplier, or lessee shall take affirmative action to ensure that applicants are employed and that employees are treated during employment without regard to their race, religion, color, sex, national origin, or age. Such action will include, but not be limited to, the following: employment; upgrading; demotion or transfer; recruitment advertising; layoff or termination; rates of pay or other forms of compensation; and selection for training, including apprenticeship. The Contractor, Subcontractor, vendor, Supplier, or lessee agrees to post in conspicuous places available to employees, and applicants for employment, notices to be provided by the City setting forth the provisions of this Equal Employment Opportunity Clause.

2. The Contractor, Subcontractor, vendor, Supplier, or lessee states that all qualified applicants will receive consideration for employment without regard to race, religion, color, sex, national origin, or age.

3. The Contractor, Subcontractor, vendor, Supplier, or lessee shall send to each labor union or representatives of workers with which it has a collective bargaining agreement or other contract or understanding, a notice to be provided by the agency contracting officer advising the said labor union or workers' representative of the Contractor's and Subcontractor's commitments under Section 202 of Executive Order No. 11246, and shall post copies of the notice in conspicuous places available to employees and applicants for employment.

4. The Contractor, Subcontractor, vendor, Supplier, or lessee will comply with all provisions of Executive Order No. 11246 and the rules, regulations, and relevant orders of the Secretary of Labor or other Federal Agency responsible for enforcement of the equal opportunity and affirmative action provisions applicable, and shall likewise furnish all information and reports required by the Mayor and/or Contractor Compliance Officers for purposes of investigation to ascertain and effect compliance with this program.

5. The Contractor, Subcontractor, vendor, Supplier, or lessee shall furnish all information and reports required by Executive Order No. 11246, and by the rules, regulations, and orders of the Secretary of Labor, or pursuant thereto, and shall permit access to all books, records, and accounts by the appropriate City and Federal officials for purposes of investigation to ascertain compliance with such rules, regulations, and orders. Compliance reports filed at such times as directed shall contain information as to the employment practice policies, program, and work force statistics of the Contractor, Subcontractor, vendor, Supplier, or lessee.

6. In the event of a Contractor's, Subcontractor's, vendor's, Supplier's, or lessee's non-compliance with the non-discrimination clause of this Contract or with any of such rules, regulations, or orders, this Contract may be canceled, terminated, or suspended in whole or in part, and the Contractor, Subcontractor, vendor, Supplier, or lessee may be declared ineligible for further City contracts in accordance with procedures provided in Executive Order No. 11246, and such other sanctions may be imposed and remedies invoked as provided in said Executive Order, or by rule, regulation, or order of the Secretary of Labor, or as may otherwise be provided by law.

7. The Contractor shall include the provisions of paragraphs 1 through 8 of this Equal Employment Opportunity Clause in every subcontract or purchase order unless exempted by rules, regulations, or orders of the Secretary of Labor issued pursuant to Section 204 of Executive Order No. 11246 of September 24, 1965 so that such provisions will be binding upon each Subcontractor or vendor. The Contractor shall take such action with respect to any subcontractor or purchase order as the contracting agency may direct as a means of enforcing such provisions, including sanctions for noncompliance; provided, however, that in the event the Contractor becomes involved in, or is threatened with litigation with a Subcontractor or vendor as a result of such direction by the contracting agency, the Contractor may request the United States to enter into such litigation to protect the interests of the United States.

8. The Contractor shall file and shall cause each of his Subcontractors, if any, to file compliance reports with the City in the form and to the extent as may be prescribed by the Mayor’s Office of Business Opportunity. Compliance reports filed at such times as directed shall contain information as to the practices, policies, programs, employment policies, and employment statistics of the Contractor and each Subcontractor.

NOTICE OF REQUIREMENT FOR AFFIRMATIVE ACTION
TO ENSURE EQUAL EMPLOYMENT OPPORTUNITY
(EXECUTIVE ORDER 11246)

1. The Offeror's or Bidder's attention is called to the "Equal Opportunity Clause" and the "Standard Federal Equal Employment Opportunity Construction Contract Specifications" set forth herein.

2. The goals and timetables for minority and female participation, expressed in percentage terms for the Contractor's aggregate work force in each trade on all construction work in the covered area, are as follows:

Timetable	Goals for Minority Participation for Each Trade	Goals for Female Participation for Each Trade
	26.2% - 27.3%	6.9%

These goals are applicable to all the Contractor's construction work (whether or not it is Federal or Federally-assisted) performed in the covered area.

The Contractor's compliance with the Executive Order and the regulations in 41 CFR Part 60-4 shall be based on its implementation of the Equal Opportunity Clause, specific affirmative action obligations required by the specifications set forth in 41 CFR 60-4.3(a), and its efforts to meet the goals established for the geographical area where the Contract resulting from this solicitation is to be performed. The hours of minority and female employment and training must be substantially uniform throughout the length of the Contract, and in each trade, and the Contractor shall make a good faith effort to employ minorities and women evenly on each of its projects. The transfer of minority or female employees or trainees from Contractor to Contractor or from project to project for the sole purpose of meeting the Contractor's goals shall be a violation of the Contract, the Executive Order, and regulations in 41 CFR part 60-4. Compliance with the goals will be measured against the total work hours performed.

3. The Contractor shall provide written notification to the Director of the Office of Federal Contract Compliance Programs within 10 working days of award of any construction subcontract in excess of $10,000 at any tier for construction work under the Contract resulting from this solicitation. The notification shall list the name, address, and telephone number of the Subcontractor; employer identification number; estimated dollar amount of the subcontract; estimated starting and completion dates of the subcontract; and the geographical area in which the Contract is to be performed.

4. As used in this Notice, and in the Contract resulting from this solicitation, the "covered area" is The Houston, Texas Standard Metropolitan Statistical Area.

STANDARD FEDERAL EQUAL EMPLOYMENT OPPORTUNITY
CONSTRUCTION CONTRACT SPECIFICATIONS
(EXECUTIVE ORDER 11246)

1. As used in these specifications:

   a. "Covered area" means the geographical area described in the solicitation from which this Contract resulted;

   b. "Director" means Director, Office of Federal Contract Compliance Programs, United States Department of Labor, or any person to whom the Director delegates authority;

   c. "Employer identification number" means the Federal Social Security number used on the Employer's Quarterly Federal Tax Return, U. S. Treasury Department Form 941.

   d. "Minority" includes:

      (i) Black (all persons having origins in any of the Black African racial groups not of Hispanic origin);

      (ii) Hispanic (all persons of Mexican, Puerto Rican, Cuban, Central or South American, or other Spanish culture or origin regardless of race);

      (iii) Asian and Pacific Islander (all persons having origins in any of the original peoples of the Far East, Southeast Asia, the Indian Subcontinent, or the Pacific Islands); and

      (iv) American Indian or Alaskan Native (all persons having origins in any of the original peoples of North America and maintaining identifiable tribal affiliations through membership and participation or community identification).

2. Whenever the Contractor, or any Subcontractor at any tier, subcontracts a portion of the work involving any construction trade, it shall physically include in each subcontract in excess of $10,000 the provisions of these specifications and the Notice which contains the applicable goals for minority and female participation and which is set forth in the solicitations from which this Contract resulted.

3. If the Contractor is participating (pursuant to 41 CFR 60-4.5) in a Hometown Plan approved by the U. S. Department of Labor in the covered area either individually or through an association, its affirmative action obligations on all work in the Plan area (including goals and timetables) shall be in accordance with that Plan for

those trades which have unions participating in the Plan. Contractors must be able to demonstrate their participation in and compliance with the provisions of any such Hometown Plan. Each Contractor or Subcontractor participating in an approved Plan is individually required to comply with its obligations under the EEO clause, and to make a good faith effort to achieve each goal under the Plan in each trade in which it has employees. The overall good faith performance by other Contractors or Subcontractors toward a goal in an approved Plan does not excuse any covered Contractor's or Subcontractor's failure to take good efforts to achieve the Plan goals and timetables.

4. The Contractor shall implement the specific affirmative action standards provided in Paragraphs 7a through p of these specifications. The goals set forth in the solicitation from which this Contract resulted are expressed as percentages of the total hours of employment and training of minority and female utilization the Contractor should reasonably be able to achieve in each construction trade in which it has employees in the covered area. The Contractor is expected to make substantially uniform progress toward its goals in each craft during the period specified.

5. Neither the provisions of any collective bargaining agreement, nor the failure by a union with whom the Contractor has a collective bargaining agreement to refer either minorities or women, shall excuse the Contractor's obligations under these specifications, Executive Order 11246, or the regulations promulgated pursuant thereto.

6. In order for the non-working training hours of apprentices and trainees to be counted in meeting the goals, such apprentices and trainees must be employed by the Contractor during the training period, and the Contractor must have made a commitment to employ the apprentices and trainees at the completion of their training, subject to the availability of employment opportunities. Trainees must be trained pursuant to training programs approved by the U. S. Department of Labor.

7. The Contractor shall take specific affirmative actions to ensure equal employment opportunity. The evaluation of the Contractor's compliance with these specifications shall be based upon its effort to achieve maximum results from its actions. The Contractor shall document these efforts fully, and shall implement affirmative action steps at least as extensive as the following:

   a. Ensure and maintain a working environment free of harassment, intimidation, and coercion at all sites, and in all facilities at which Contractor's employees are assigned to work. The Contractor, where possible, shall assign two or more women to each construction project. The Contractor shall specifically ensure that all foremen, superintendents, and other on-site supervisory personnel are aware of and carry out the Contractor's obligation to maintain such a working environment, with specific attention to minority or female individuals working at such sites or in such facilities.

b. Establish and maintain a current list of minority and female recruitment sources; provide written notification to minority and female recruitment sources and to community organizations when the Contractor or its unions have employment opportunities available, and maintain a record of the organizations' responses.

c. Maintain a current file of the names, addresses, and telephone numbers of each minority and female off-the-street applicant and minority or female referral from a union, a recruitment source, or community organization and of what action was taken with respect to each such individual. If such individual was sent to the union hiring hall for referral and was not referred back to the Contractor by the union or, if referred, not employed by the Contractor, this shall be documented in the file with the reason therefor, along with whatever additional actions the Contractor may have taken.

d. Provide immediate written notification to the Director when the union or unions with which the Contractor has a collective bargaining agreement has not referred to the Contractor a minority person or woman sent by the Contractor, or when the Contractor has other information that the union referral process has impeded the Contractor's efforts to meet its obligations.

e. Develop on-the-job training opportunities and/or participate in training programs for the area which expressly include minorities and women, including upgrading programs and apprenticeship and trainee programs relevant to the Contractor's employment needs, especially those programs funded or approved by the Department of Labor. The Contractor shall provide notice of these programs to the sources compiled under 7b above.

f. Disseminate the Contractor's EEO policy by providing notice of the policy to unions and training programs and requesting their cooperation in assisting the Contractor in meeting its EEO obligations by including it in any policy manual and collective bargaining agreement; by publicizing it in the company newspaper, annual report, etc.; by specific review of the policy with all management personnel and with all minority and female employees at least once a year; and by posting the company EEO policy on bulletin boards accessible to all employees at each location where construction work is performed.

g. Review, at least annually, the company's EEO policy and affirmative action obligations under these specifications with all employees having any responsibility for hiring, assignment, layoff, termination, or other employment decisions, including specific review of these items with on-site supervisory personnel such as superintendents, general foremen, etc., prior to the initiation of construction work at any job site. A written record shall be made and maintained identifying the time and place of

these meetings, persons attending, subject matter discussed, and disposition of the subject matter.

h. Disseminate the Contractor's EEO policy externally by including it in any advertising in the news media, specifically including minority and female news media, and providing written notification to and discussing the Contractor's EEO policy with other contractors and subcontractors with whom the Contractor does or anticipates doing business.

i. Direct its recruitment efforts, both oral and written, to minority, female and community organizations, to schools with minority and female students, and to minority and female recruitment and training organizations serving the Contractor's recruitment area and employment needs. Not later than one month prior to the date for the acceptance of applications for apprenticeship or other training by any recruitment source, the Contractor shall send written notification to organizations such as the above, describing the openings, screening procedures, and tests to be used in the selection process.

j. Encourage present minority and female employees to recruit other minority persons and women and, where reasonable, provide after school, summer, and vacation employment to minority and female youth both on the site and in other areas of a Contractor's work force.

k. Validate all tests and other selection requirements where there is an obligation to do so under 41 CFR Part 60-3.

l. Conduct, at least annually, an inventory and evaluation at least of all minority and female personnel for promotional opportunities and encourage these employees to seek or to prepare, through appropriate training, etc., for such opportunities.

m. Ensure that seniority practices, job classifications, work assignments, and other personnel practices do not have a discriminatory effect by continually monitoring all personnel and employment-related activities to ensure that the EEO policy and the Contractor's obligations under these specifications are being carried out.

n. Ensure that all facilities and company activities are nonsegregated except that separate or single-user toilet and necessary changing facilities shall be provided to assure privacy between the sexes.

o. Document and maintain a record of all solicitations of offers for subcontracts from minority and female construction contractors and suppliers, including circulation of solicitations to minority and female contractor associations and other business associations.

p. Conduct a review, at least annually, of all supervisors' adherence to and performance under the Contractor's EEO policies and affirmative action obligations.

8. Contractors are encouraged to participate in voluntary associations which assist in fulfilling one or more of their affirmative action obligations (7a through p). The efforts of a contractor association, joint contractor union, contractor-community, or other similar group of which the Contractor is a member and participant, may be asserted as fulfilling any one or more of its obligations under 7a through p of these Specifications provided that the Contractor actively participates in the group, makes every effort to assure that the group has a positive impact on the employment of minorities and women in the industry, ensures that the concrete benefits of the program are reflected in the Contractor's minority and female work force participation, makes a good faith effort to meet its individual goals and timetables, and can provide access to documentation which demonstrates the effectiveness of actions taken on behalf of the Contractor. The obligation to comply, however, is the Contractor's and failure of such a group to fulfill an obligation shall not be a defense for the Contractor's noncompliance.

9. A single goal for minorities and a separate single goal for women have been established. The Contractor, however, is required to provide equal employment opportunity and to take affirmative action for all minority groups, both male and female, and all women, both minority and non-minority. Consequently, the Contractor may be in violation of the Executive Order if a particular group is employed in a substantially disparate manner (for example, even though the Contractor has achieved its goals for women generally, the Contractor may be in violation of the Executive Order if a specific minority group of women is under utilized).

10. The Contractor shall not use the goals and timetables or affirmative action standards to discriminate against any person because of race, color, religion, sex, or national origin.

11. The Contractor shall not enter into any subcontract with any person or firm debarred from Government contracts pursuant to Executive Order 11246.

12. The Contractor shall carry out such sanctions and penalties for violation of these specifications and of the Equal Opportunity Clause, including suspension, termination, and cancellation of existing subcontracts as may be imposed or ordered pursuant to Executive Order 11246, as amended, and its implementing regulations, by the Office of Federal Contract Compliance Programs. Any Contractor who fails to carry out such sanctions and penalties shall be in violation of these specifications and Executive Order 11246, as amended.

13. The Contractor, in fulfilling its obligations under these specifications, shall implement specific affirmative action steps, at least as extensive as those standards prescribed in Paragraph 7 of these specifications, so as to achieve maximum results from its efforts to ensure equal employment opportunity. If the

Contractor fails to comply with the requirements of the Executive Order, the implementing regulations, or these specifications, the Director shall proceed in accordance with 41 CFR 60-4.B.

14. The Contractor shall designate a responsible official to monitor all employment-related activity to ensure that the company EEO policy is being carried out, to submit reports relating to the provisions hereof as may be required by the Government, and to keep records. Records shall at least include for each employee the name, address, telephone number, construction trade, union affiliation, if any, employee identification number when assigned, social security number, race, sex, status (e.g., mechanic, apprentice, trainee, helper, or laborer), dates of changes in status, hours worked per week in the indicated trade, rate of pay, and locations at which the work was performed. Records shall be maintained in an easily-understandable and retrievable form; however to the degree that existing records satisfy this requirement, contractors shall not be required to maintain separate records.

15. Nothing herein provided shall be construed as a limitation upon the application of other laws which establish different standards of compliance or upon the application of requirements for the hiring of local or other area residents (e.g., those under the Public Works Employment Act of 1977 and the Community Development Block Grant Program).

DESCRIPTION OF JOB CATEGORIES

Officials, Managers, and Administrators

Occupations requiring administrative personnel who set board policies, exercise overall responsibility for the execution of these policies, or provide specialized consultation on a regional, district, area basis, or direct individual departments or special phases of a firm's operations.

Includes: Officials, executives, middle management, plant managers, department managers, superintendents, salaried foremen who are members of management, purchasing agents, buyers, bureau chiefs, directors, deputy directors, wardens, examiners, sheriffs, police and fire chiefs, and kindred workers.

Professionals

Occupations which require specialized and theoretical knowledge which is usually acquired through college or experience of such kind and amount as to provide a comparable background.

Includes: Accountants, auditors, airplane pilots and navigators, architects, artists, chemists, designers, dieticians, editors, engineers, lawyers, librarians, mathematicians, natural scientists, registered professional nurses, personnel and labor relations workers, physical scientists, teachers, social workers, doctors, psychologists, economists, systems analysts, employment and vocational rehabilitation counselors, instructors, police and fire captains and lieutenants, and kindred workers.

Paraprofessionals

Occupations in which workers perform some of the duties of a professional or technician in a supportive role, which usually requires less formal training and/or experience normally required for professional or technical status. Such positions may fall within an identified pattern of a "New Careers" concept.

Includes: Library assistants, medical aides, child support workers, police auxiliary, welfare service aides, recreation assistants, homemakers aides, home health aides, and kindred workers.

Technicians

Occupations requiring a combination of basic scientific knowledge and manual skill which can be obtained through about two (2) years of post high school education, such as is offered in many technical institutes and junior colleges, or through equivalent on-the-job training.

Includes: Computer programmers and operators, draftsmen, engineering aides, junior engineers, mathematical aides, licensed practical or vocational nurses, photographers, radio operators, scientific assistants, surveyors, technical illustrators, technicians (medical, dental, electronics, physical sciences), police and fire sergeants, and kindred workers.

Protective Service Workers

Occupations in which workers are entrusted with public safety, security, and protection from destructive forces.

Includes: Police patrol officers, fire fighters, guards, deputy sheriffs, bailiffs, correctional officers, detectives, marshals, harbor patrol officers, and kindred workers.

Sales Workers

Occupations engaging wholly or primarily in direct selling.

Includes: Advertising agents and salespersons, insurance agents and brokers, real estate agents and brokers, stock and bond salespersons, demonstrators, salespersons and sales clerks, grocery clerks, cashiers, and kindred workers.

Office and Clerical

Occupations in which workers are responsible for internal and external communications, recording and retrieval of data and/or information and other paper work required in an office predominantly non-manual, though some manual work not directly involved with altering or transporting the products is included.

Includes: Bookkeepers, cashiers, collectors (bills and accounts), messengers and office helpers, office machine operators, shipping and receiving clerks, stenographers, typists and secretaries, telegraph and telephone operators, court transcribers, hearing reporters, statistical clerks, dispatchers, license distributors, payroll clerks, and kindred workers.

Skilled Craft Workers

Occupations in which workers perform jobs which require special manual skill through on-the-job training and experience, or through apprenticeship or other formal training programs. These workers exercise considerable independent judgment and usually receive an extensive period of training.

Includes: The building trades, hourly paid foremen and leadmen who are not members of management, mechanics and repairmen, skilled machining occupations, compositors and typesetters, electricians, engravers, job setters

(metal), motion picture projectionists, pattern and model makers, stationary engineers, tailors, heavy equipment operators, carpenters, and kindred workers.

Operatives (semi-skilled)

Workers who operate machine or processing equipment or perform other factory-type duties of intermediate skill level which can be mastered in a few weeks and require only limited training.

Includes: Apprentices (auto mechanics), plumbers, bricklayers, carpenters, electricians, mechanics, building trades, metal workers, machinists, printing trades, operatives, attendants (auto service and parking), blasters, chauffeurs, deliverymen, dressmakers and seamstresses (except factory), dryers, furnacemen, heaters (metal), laundry and dry cleaning operatives, milliners, miners, motormen, oilers, greasers, etc. (except auto), painters (except construction and maintenance), photographic process workers, stationary firemen, truck and tractor drivers, weavers (textile), welders and flame cutters, and kindred workers.

Laborers (unskilled)

Workers in manual occupations which generally require no special training. These workers perform elementary duties that may be learned in a few days and require the application of little or no independent judgment.

Includes: Garage workers, car washers and greasers, gardeners (except farm) and groundskeepers, longshoremen and stevedores, lumbermen, craftsmen, and wood choppers, laborers performing lifting, digging, mixing, loading, and pulling operations, and kindred workers.

Service/Maintenance Workers

Occupations in which workers perform duties which result in or contribute to the comfort, convenience, hygiene or safety for the general public or which contribute to the upkeep and care of buildings, facilities or grounds, or public property. Workers in this group may operate machinery.

Includes: Chauffeurs, laundry and dry cleaning operatives, truck drivers, trash collectors, custodial personnel, gardeners and groundskeepers, construction laborers, attendants (hospital and other institutions), professional and personal service, counter and fountain workers, elevator operators, firemen and fire protection, guards, watchmen and doorkeepers, stewards, porters, waiters, and kindred workers.

CERTIFICATION BY PROPOSED SUBCONTRACTOR REGARDING EQUAL EMPLOYMENT OPPORTUNITY

_____
Name of Prime Contractor

_____
Address

GENERAL

In accordance with Executive Order 11246 (30 F.R. 12319-25), the implementing rules and regulations thereof, and orders of the Secretary of Labor, a certification regarding Equal Opportunity is required of bidders or prospective contractors and their proposed subcontractors prior to the award of contracts or subcontracts.

SUBCONTRACTOR'S CERTIFICATION

Subcontractor's Name: _____

Address: _____

IRS Employer Identification Number: _____

Job Description : _____

1. Participation in a previous contract or subcontract.

   a. Subcontractor has participated in a previous contract or subcontract subject to the Equal Opportunity Clause. ____YES ____NO

   b. Compliance reports were required to be filed in connection with such contract or subcontract. ____YES ____NO

   c. Subcontractor has filed all compliance reports required by Executive Orders 10925, 11114, 11246, or by regulations of the Equal Employment Opportunity Commission issued pursuant to Title VII of the Civil Rights Act of 1964. ____YES ____NO

   d. If answer of Item c. is "No", please explain in detail on reverse side of this certification.

2. Dollar amount of proposed subcontract: $ _____

3. Anticipated performance period in days: _____

4. Expected total number of employees to perform the proposed subcontract: _____

5. Nonsegregated facilities.

   a. Notice to prospective federally-assisted construction contractors
      (1) A Certification of Nonsegregated Facilities, as required by the May 9, 1967, order (32 F.R. 7439, May 19, 1967) on Elimination of Segregated Facilities, by the Secretary of Labor, must be submitted to the Contractor prior to the award of a subcontract exceeding $10,000 which is not exempt from the provisions of the Equal Opportunity Clause.
      (2) Contractors receiving subcontract awards exceeding $10,000 which are not exempt from the provisions of the Equal Opportunity Clause will be required to provide for the forwarding of this notice to prospective subcontractors for supplies and construction contracts where the subcontracts exceed $10,000 and are not exempt from the provisions of the Equal Opportunity clause.

   b. <u>Certification of non-segregated facilities</u>

      The federally-assisted construction contractor certified that he/she does not maintain or provide any segregated facilities at any of his/her establishments, and does not permit employees to perform their services at any location, under his/her control, where segregated facilities are maintained. The federally-assisted construction Contractor certifies further that he/she will not maintain or provide any segregated facilities at any of his/her establishments, and will not permit employees to perform their services at any location, under his/her control, where segregated facilities are maintained. The federally-assisted construction Contractor agrees that a breach of this certification is a violation of the Equal Opportunity Clause in this Contract. As used in this certification, the term "segregated facilities" means any waiting rooms, work areas, restrooms and washrooms, restaurants, and other eating areas, time clocks, locker rooms and other storage or dressing areas, parking lots, drinking fountains, recreation or entertainment areas, transportation, and housing facilities provided for employees which are segregated by explicit directive or are in fact segregated on the basis of race, creed, color, or national origin because of habit, local custom, or otherwise. The federally-assisted construction Contractor agrees that (except where he/she has obtained identical certifications from proposed Subcontractors for specific time periods) he/she will obtain identical certifications in duplicate from proposed Subcontractors prior to the award of subcontracts exceeding $10,000 which are not exempt from the provisions of the Equal Opportunity Clause, and that he/she will retain the duplicate of such certifications in his/her files. The Contractor will include the original in his/her Bid Package.

6. Race or ethnic group designation of bidder. Enter race or ethnic group in appropriate box:

£ White £ Black £ Hispanic

£ Pacific Islander, Asian £ American Indian, Aleut.

7. Gender

£ Male £ Female

REMARKS: _

Certification - The information above is true and complete to the best of my knowledge and belief.

_____
Company Officer (Please Type)

_____ _____
Signature Date

NOTE: The penalty for making false statements in offers is prescribed in 18 U.S.C. 1001.

Certification by Proposed Material Suppliers, Lessors, and Professional Service Providers Regarding Equal Employment Opportunity

Company Name: _____ $_____
(Supplier, Lessor, Professional Service Provider) (Amount of Contract)

Company Address: _____

Company Telephone Number:_____ Fax:_____

E-mail Address: _____

Web Page/URL Address:_____

Company Tax Identification Number: _____

Project No.: [*WBS/CIP/AIP/File No.*]_____

Project Name: [*Legal Project Name*]_____

In accordance with the City of Houston Ordinance 78-1538, Supplier/Lessor/Professional Service Provider represents to be an equal opportunity employer and agrees to abide by the terms of the Ordinance. This certification is required of all Suppliers/Lessors/Professional Service Providers (herein Supplier) with contracts in the amount of $10,000.00 or more.

[ ] Yes [ ] No Supplier agrees not to discriminate against any employee or applicant for employment because of race, religion, color, sex, national origin, or age.

[ ] Yes [ ] No Supplier agrees that all qualified applicants will receive consideration for employment without regard to race, religion, color, sex, national origin, or age.

[ ] Yes [ ] No Supplier will comply with all provisions of Executive Order No. 11246 and rules, regulations and applicable orders of the Department of Labor or other Federal Agency responsible for enforcement of applicable equal opportunity and affirmative action provisions and will likewise furnish all information and reports required by the Mayor or Contract Compliance Officers for the purpose of investigation to ascertain and effect compliance with the City of Houston's Office of Affirmative Action and Contract Compliance.

[ ] Yes [ ] No The Supplier shall file and cause their sub-tier contractors to file compliance reports with the City in the form and to the extent as may be prescribed by the Mayor or Contract Compliance Officers. Compliance reports filed at such times as directed shall contain information including, but not limited to, the practices, policies, programs, and employment policies.

I hereby certify that the above information is true and correct.

_____ _____
COMPANY OFFICER (Signature) DATE

_____
NAME AND TITLE (Print or type)

END OF DOCUMENT

Document 00808

REQUIREMENTS FOR THE CITY OF HOUSTON PROGRAM FOR MINORITY, WOMEN, AND SMALL BUSINESS ENTERPRISES AND PERSONS WITH DISABILITIES ENTERPRISES (PDBE)

CONSTRUCTION CONTRACTS

I. GENERAL

A. CITY AUTHORITIES

1. The "OBO Director" is the City of Houston's Office of Business Opportunity Director, or his or her designee.
City of Houston
611 Walker Street, 7th Floor
Houston, Texas 77002

2. The "Contracting Department" for this Project is the City of Houston Department specified in Document 00520 – Agreement.

3. The "Project Manager" is for this Project specified in Document 00550 – Contract Approval Notification.

II. REOCCURRING REPORTS THAT MUST BE SUBMITTED DURING THE COURSE OF THE CONTRACT:

A. MWSBE MONTHLY REPORT PROCESS

The Contractor shall complete the MWSBE Monthly Utilization Report in the Contract Compliance and Monitoring System (available at https://houston.mwdbe.com/).

B. The Contractor shall comply with further, applicable instructions regarding reporting and compliance as provided in Sections III.E and III.I below.

III. BUSINESS ENTERPRISE PROGRAM REQUIREMENTS:

A. PURPOSE

This Document facilitates implementation of City of Houston, Tex. Code of Ordinances Chapter 15, Article V, § 15-81 et seq., relating to MWSBE contract participation, and Code of Ordinances Chapter 15, Article VI, § 15-90 et seq., relating to PDBE contract participation (collectively, the "Business Enterprise Program or "MWSBE"). City of Houston, Tex. Ordinance 2013-0428, May 8, 2013.

B. POLICY

It is the policy of the City to encourage the full participation of Minority and Women-owned Business Enterprises, Small Business Enterprises, and Persons with Disabilities Business Enterprises in all phases of its procurement activities and to afford them a full and fair opportunity to compete for City contracts at all levels.

C. POLICY ELEMENTS

1. The Contractor agrees to ensure that MWSBE firms have a full and fair opportunity to participate in the performance of City contracts. In this regard the Contractor shall make all reasonable Good Faith Efforts to meet the Contract Goals for this Contract.

2. The Contractor and any Subcontractor shall not discriminate on the basis of race, color, religion, national origin, or sex in the performance of City contracts.

3. Contractor's performance in meeting the Participation Plan Percentage will be monitored during the construction phase of the Contract by the OBO Director and Contracting Department.

D. PERCENTAGE GOALS

The MWSBE goals and PDBE goals, if any, for the Work are specified in Document 00800 – Supplementary Conditions Goals.

E. CONTRACTOR RESPONSIBILITIES

1. Prior to Award:

The Bidder shall submit MWSBE documents in accordance with the requirements of Document 00410 – Bid Form Part A.

a. In accordance with the Code of Ordinances and the OBO Good Faith Efforts Policy (Attachment A), the Department shall approve an Apparent Low Bidder's MWSBE Participation Plan–Document 00470 (the "Bidder's Plan" or "Plan") within 3 business days of the Bid Opening only if the Department representative determines that Bidder's Plan meets the advertised Contract Goal and is administratively complete.

b. If the Department cannot approve the Bidder's Plan, it shall forward the Plan to the OBO Director, who shall review the Bidder's Plan, and if applicable, the Bidder's Document 00471 (Record of Good Faith Efforts) and Document 00472 (Pre-Award Deviation Request) and determine whether the Bidder has made Good Faith Efforts to meet the Contract Goals within 10 business days of the Bid Opening.

c. If the OBO Director determines that the Bidder has failed to provide a valid participation plan or make Good Faith Efforts or if the Bidder fails to provide documents and associated information required by this Document 00808 or reasonably requested in writing by the OBO Director, the OBO Director may declare the Bidder to be non-responsible.

d. If the OBO Director determines that the Bidder has made Good Faith Efforts, the Director may approve the Bidder's Contract Goal Deviation request. Thereafter, the Bidder/Contractor shall be bound by the Plan, as approved by the OBO Director.

e. The Contractor shall:

(1) ensure that all MWSBE firms listed in the Plan are certified by the Office of Business Opportunity prior to bid date. Qualified, non-certified firms may obtain priority consideration for certification if no more than two firms are certified with the same capability as the non-certified firm.

(2) execute written contracts with all certified Subcontractors and Suppliers. All such contracts must be executed and sent to the OBO Director and Contracting Department within 30 days after the date of the Notice to Proceed and must include provisions set forth in Articles 3 and 5 of Document 00700 - General Conditions.

(3) designate an MWSBE liaison officer who will administer the Contractor's MWSBE program and who shall document and maintain records of Good Faith Efforts to subcontract with MWSBE Subcontractors and Suppliers.

2. After Award:

a. The Contractor shall submit MWSBE Monthly Utilization Reports, requested in Article II above.

b. The Contractor shall complete and submit to the OBO Director a Post-Award Deviation Request–Document 00572 ("Post-Award Deviation Request") if the Contractor reasonably believes that it will not achieve the Business Enterprise Program Participation Plan Percentage documented in the Plan. The Contractors shall also submit to the OBO Director, with a Copy to the Contracting Department, a Record of Post-Award Good Faith Efforts (Document 00571) for each Certified Firm that the Contractor does not use in accordance with the Approved Plan before the Contractor uses another firm to perform the work.

c. The Contractor shall conform to the Plan unless the OBO Director grants a Post-Award Deviation Request. The OBO Director shall approve or reject a Deviation Request within 5 business days of receipt of the Deviation Request.

d. The OBO Director shall grant a Post-Award Deviation Request if

(1) for a reason beyond the Contractor's control, the Contractor is unable to use the certified MWSBE firm in the Plan to perform the specified work. In such cases, the Contractor shall use and document Good Faith Efforts to find a similarly qualified, certified MWSBE firm to perform such specified work; or

(2) the Contractor reasonably believes that, due to a change of scope, execution of the work in accordance with the directions from the Contracting Department is unlikely to meet the terms of the Plan. In such cases, the Contractor shall use and document Good Faith efforts to achieve a reasonable amount of MWSBE participation on the remaining work on the Contract.

(3) The OBO Director shall not unreasonably withhold approval of a Post-Award Deviation Request.

e. After the Date of Substantial Completion, the OBO Director shall evaluate the Contractor's Good Faith Efforts towards meeting the Plan, as it may amended.

f. If the Contractor fails to conform to the Plan and fails to submit a Post-Award Deviation Request or provide documents and associated information required by the Good Faith Efforts Policy or reasonably requested in writing by the OBO Director, the OBO Director may impose sanctions in accordance with Article VI of this Document 00808.

F. ELIGIBILITY OF MWSBE FIRMS FOR SUBCONTRACTING

1. To ensure that the City's Business Enterprise Program benefits only those firms that are owned and controlled by a minority person(s), a woman (women),a person(s) with a disability, or a small business enterprise, the Office of Business Opportunity will certify the eligibility of MWSBE and PDBE Contractors, Subcontractors, and Suppliers. Contact the Office of Business Opportunity Certification Section at 832-393-0600 for information regarding certification.

2. The Office of Business Opportunity maintains a Certified Minority, Women and Small Business Enterprises and Disabilities Business Enterprises Directory on the City's website. This Directory also lists federally-designated Disadvantaged Business Enterprises (DBEs).

NOTE: MWSBE firms, even if certified by another agency, may not qualify for Contract Goals unless certified by the Office of Business Opportunity prior to acceptance of the Participation Plan.

G. DETERMINATION OF MWSBE PARTICIPATION

MWSBE participation shall be counted toward meeting the Contract Goals in response to the following:

1. Once a firm is certified as a MWSBE firm, the total dollar value of the subcontract awarded to the MWSBE firm is counted toward the Contract Goals (See Sections III.G.4 and III.G.5 below). Safety and Participation goals do not count as a single goal concerning MWSBE/DBE requirements.

2. When the Contractor or Subcontractor is in a joint venture with one or more MWSBE firms, the OBO Director shall determine the percent of participation resulting from such joint venture to be counted toward the Contract Goals.

3. Contractor may count toward its Contract Goals only those MWSBE Subcontractors/ Suppliers performing a Commercially Usefully Function.

a. **COMMERCIALLY USEFUL FUNCTION** means a discrete task or group of tasks, the responsibility for performance of which shall be discharged by the MWSBE firm by using its own forces or by actively supervising on-site the execution of the tasks by another entity for whose work the MWSBE firm is responsible. In determining whether a certified firm is performing a commercially useful function, factors including but not limited to the following shall be considered: (1) whether the firm has the skill and expertise to perform the work for which it is being utilized and possesses all necessary licenses; (2) whether the firm is in the business of performing, managing, or supervising the work for which it has been certified and is being utilized; and

(3) whether it is performing a real and actual service that is a distinct and verifiable element of the work called for in a contract. Without limiting the generality of the foregoing, a MWSBE will not be considered to be performing a commercially useful function, if it subcontracts to non-MWSBE firms or to other MWSBE firms, more than 50 percent of a contract being counted toward the applicable Contract Goals, unless such subcontracting in excess of 50 percent has been expressly approved by the OBO Director in a Goal or Plan Deviation Request (Document 00472 or Document 00572) (either pre-bid or post award).

b. The OBO Director shall approve a Plan Deviation Request if the Contractor demonstrates that the industry standard for the type of work involved is to subcontract over 50 percent of the work.

4. A MWSBE firm cannot subcontract more than 50 percent of the work for which it is responsible to perform unless the OBO Director grants a Deviation Approval.

5. The Contractor may count 100 percent of MWSBE Manufacturer Supplier's participation and 60 percent of MWSBE Non-Manufacturer Supplier's participation toward its Contract Goals. Such MWSBE Supplier contracts shall not exceed 50 percent of contract's goals.

6. The OBO Policy and Procedures Manual, as amended, shall apply to the Contract for other determinations regarding counting MWSBE participation not explicitly provided for in the Contract.

H. CONTRACTOR COMPLIANCE

To ensure compliance with MWSBE requirements, the OBO Director and Contracting Department will monitor Contractor's efforts regarding MWSBE Subcontractors/Suppliers during the performance of this Contract. This may be accomplished through the following: job site visits, reviewing of records and reports, and interviews of randomly selected personnel.

I. RECORDS AND REPORTS

1. In accordance with II.A of this Document, the Contractor shall submit an initial report outlining MWSBE participation, 40 days after the Notice to Proceed date, and on or before the 15th day of each month thereafter until all MWSBE subcontracting or material supply activity is completed. Each report shall cover the preceding month's activity. The Contractor shall use the MWSBE Contract Compliance and Monitoring System (B2G Now) to meet this requirement.

2. Contractor shall maintain the following records for review upon request by the OBO Director or Contracting Department:

a. Copies of executed Subcontractor agreements and purchase orders;
b. Documentation of payments and other transactions with MWSBE Subcontractors/ Suppliers;
c. Appropriate explanations of any changes or replacements of MWSBE Subcontractors/Suppliers;

NOTE: All replacement MWSBE Subcontractors/Suppliers must be certified by the Office of Business Opportunity.

d. Any other records required by the OBO Director or Contracting Department.

3. If a Participation Plan Percentage is not being met, the monthly report shall include a narrative description of the progress being made in MWSBE participation. If sufficient MWSBE Subcontractors or Suppliers to meet the Participation Plan Percentage are being utilized, they should be identified by name and the dollar amount paid to date for work performed or materials furnished by each MWSBE during the monthly period. Reports are required when no activity has occurred in a monthly period.

4. Contractor shall retain all such records for a period of four years following completion of the Work and shall be available at reasonable times and places for inspection by authorized representatives of the City including the City Controller.

IV. SANCTIONS:

A. SUSPENSION PERIOD AND WAIVER

Pursuant to Section 15-86 of the Code of Ordinances, the OBO Director is authorized to suspend for a period of up to, but not to exceed, five years, any Contractor who has failed to make Good Faith Efforts.

B. GUIDELINES FOR IMPOSITION OF SANCTIONS

1. General:

a. The OBO Director shall not impose any sanction except upon evidence of specific conduct on the part of a MWSBE or Contractor that is inconsistent with or in direct contravention of specific applicable requirements for Good Faith Efforts.

b. Imposition and enforcement of suspensions shall be consistent with applicable state law.

2. Severity of Sanctions:

a. In determining the length of any suspension, the OBO Director shall consider the following factors:

(1) Whether the failure to comply with applicable requirements involved intentional conduct or, alternatively, may be reasonably concluded to have resulted from a misunderstanding on the part of the Contractor or MWSBE of the duties imposed on them by Article V of Chapter 15 of the Code of Ordinances and these procedures;

(2) The number of specific incidences of failure by Contractor or MWSBE to comply;

(3) Whether the Contractor or MWSBE has been previously suspended;

(4) Whether the Contractor or MWSBE has failed or refused to provide the OBO Director with any information requested by the Director or required to be submitted to the Director pursuant to law or these procedures;

(5) Whether the Contractor or MWSBE has materially misrepresented any applicable facts in any filing or communication to the OBO Director; and

(6) Whether any subsequent restructuring of the subject business or other action has been undertaken to cure the deficiencies in meeting applicable requirements.

b. Suspensions may be for any length of time not to exceed five years. Suspensions in excess of one year shall be reserved for cases involving intentional or fraudulent misrepresentation or concealment of material facts, multiple acts in contravention of applicable requirements, cases where the Contractor or MWSBE has been previously suspended, or other similarly egregious conduct.

C. DELEGATION

A decision to implement a suspension may be taken after notice and an opportunity for a hearing by an impartial person(s) designated by the OBO Director as the hearing officer.

The hearing officer(s) shall not have participated in the actions or investigations giving rise to the suspension hearing.

D. NOTICE

1. Prior to imposing any suspension, the OBO Director shall deliver written notice to the Contractor or MWSBE setting forth the grounds for the proposed suspension and setting a date, time, and place to appear before the hearing officer(s) for a hearing on the matter.

2. Any notice required or permitted to be given hereunder to any Contractor or MWSBE may be given either by personal delivery or by certified United States mail, postage prepaid, return receipt requested, addressed to their most recent address as specified in the records of the Office of Business Opportunity or in the Contract if no address is on file with the Office of Business Opportunity.

E. HEARING PROCEDURES

Proceedings before a hearing officer shall be conducted informally and in accordance with the OBO Policy and Procedures Manual, as amended, provided that each party may be represented by counsel and may present evidence and cross-examine witnesses. The City shall have the burden to prove by a preponderance of evidence that the Contractor's or MWSBE firm's actions constitute misconduct or failure to make Good Faith Efforts. The decision shall be reduced to writing and notice provided to the Contractor or MWSBE.

F. APPEALS

Appeals authorized pursuant to Section 15-86(b) of the Code of Ordinances shall be conducted by the OBO Director. Pursuant to Section 15-86(b), The contractor may appeal the OBO Director's decision in accordance with Section 15-23 of the Code of Ordinances and OBO Policy and Procedures.

ATTACHMENT A

City of Houston
Office of Business Opportunity
Good Faith Efforts Policy

General Policy.

Good Faith Efforts are steps taken to achieve an Contract Goal or other requirements which, by their scope, intensity and usefulness demonstrates the bidder's responsiveness to fulfill the business opportunity objective prior to the award of a contract, as well as the contractor's responsibility to put forth measures to meet or exceed the Contract Goal throughout the duration of the contract.

Good Faith Efforts are required to be made and demonstrated by an apparent successful bidder on goal oriented contracts or proposer on a regulated contract prior to award of a contract. Good Faith Efforts are required on professional services and construction contracts and on procurement of goods and non-professional service contracts with goals. If a bidder, when submitting a participation plan at the time of bid or proposal submission, anticipates it cannot or will not meet the Contract Goal prior to the award, the bidder must demonstrate to Office of Business Opportunity ("OBO") it has made Good Faith Efforts to meet the Contract Goal, to be eligible for the contract award.

Good Faith Efforts shall be evaluated on a case-by-case basis in making a determination whether a bidder or contractor is in compliance with this policy. The efforts employed by a bidder or contractor should be those that one could reasonably expect a bidder or contractor to take if the bidder were actively and aggressively attempting to obtain MWSBE participation sufficient to meet the Contract Goal. Efforts taken that are mere formalities or other perfunctory acts shall not be considered Good Faith Efforts to meet Contract Goals.

The factors provided herein are representative of the types of actions OBO will consider in determining whether the bidder or contractor made Good Faith Efforts to obtain MWSBE participation to meet the Contract Goal. The factors prescribed below are not intended to be a mandatory checklist, nor is it intended to be exhaustive or exclusive. OBO may consider other factors or types of efforts that may be relevant in appropriate cases.

If a contractor fails to submit Good Faith Efforts documentation as provided in this Policy, it waives the right to appeal OBO decisions related to this Policy. OBO will review all the efforts made by the contractor, including the quality and quantity of those efforts.

Pre–Award.

A bidder must submit a participation plan (Document 00470) to OBO at the time the bidder submits the bid. If the participation by certified MWSBE subcontractors documented on the participation plan ("participation") is less than the Contract Goal, a bidder should submit a Record of Good Faith Efforts (Document 00471) with the bid. A bidder should also submit a request for a deviation (Document 00472) if the bidder, having used Good Faith Efforts, reasonably believes that it cannot meet the Contract Goal or a commercially useful deviation.

In making a determination that the bidder has made a good faith effort to meet the Contract Goals, OBO shall consider specific documentation concerning the steps taken to obtain MWSBE participation, with a consideration of, by way of illustration and not limitation, whether the bidder demonstrated a genuine effort to comply with the following factors:

1. Attended any pre-bid or pre-proposal meetings scheduled by the City Department;

2. Followed up with MWSBEs that attended the pre-bid or pre-proposal meetings to discuss subcontracting and supplier opportunities and contacted MWSBEs listed in the City's online directory;

3. Conducted outreach with minority and women focused organizations and associations far in advance of solicitation due date (no less than 10 business days);

4. Identified and designated portions of the work to be performed by MWSBEs to increase the likelihood of meeting the Contract Goals (including where appropriate breaking down the contract into reasonably sized subcontracts to ensure participation);

5. Advertised subcontracting opportunities in news media focused towards minority and women persons far in advance of solicitation due date;

6. Provided MWSBEs with a point of contact that was knowledgeable about the project and possessed decision-making authority to answer questions from interested MWSBEs;

7. Provided a reasonable number of MWSBEs certified with timely written notices via email, mail, and/or fax and/or with documented contact regarding the subcontracting/supplier opportunities. A "reasonable number of MWSBEs" shall be based on the number of MWSBEs available in the directory;

8. Solicited the MWSBEs within a reasonable amount of time (no less than seven business days) before bid submission, as well as followed up with the MWSBEs solicited to determine if they were interested in submitting a bid or proposal or participating on a team.

9. Provided interested MWSBEs certified to perform the solicited work with prompt access to the plans, specifications, scope of work and requirements of the contract;

10. Negotiated in good faith with interested MWSBEs, and not rejecting MWSBEs as unqualified without sound reasons based on a thorough investigation of their capabilities;

11. Entered into a formal contract, or signing enforceable letters of intent with MWSBEs;

12. Provided an explanation to any MWSBE whose bid or price quotation is rejected, unless another MWSBE is accepted for the same work, as follows:
    a. Where price competitiveness is not the reason for rejection, a written rejection notice including the reason for rejection will be sent to the rejected MWSBE firm;
    b. Where price competitiveness is the reason for rejection, a meeting must be held with the price-rejected MWSBE, if requested, to discuss the rejection;

13. Made efforts to assist interested MWSBEs in obtaining bonding, lines of credit, insurance required for the contract, and documenting MWSBE denied by bona fide surety agents;

14. Ensured that the conditions and requirements for subcontracts are commensurate with industry standards and would not cause an economic hardship on MWSBEs, such as unnecessary insurance or coupling bid bonds with retainage;

15. Incorporated efforts not attempted earlier or on previous bids that appear more likely to lead to attaining the Contract Goal. Past performance on similar contracts with similar scopes will also be taken in consideration when determining Good Faith Efforts. A bidder that continues to make same efforts without any significant change in the level of participation may not be making Good Faith Efforts.

Post–Award.

The contractor must sign the approved participation plan (Document 00470 or Document 00570) prior to starting work on the Project. A contractor should submit a request for deviation (Document 00572) from OBO if the contractor, having made Good Faith Efforts, reasonably believes that it will not achieve the Participation Plan Percentage documented in the approved participation plan. Unless OBO approves a deviation, a contractor must submit to OBO a Participation Summary (Document 00660) prior to City Council's consideration of any close-out, term extension, or change order. If participation is less than anticipated in the approved participation plan, the contractor must submit a Record of Good Faith Efforts (Document 00571) along with the Participation Summary. A contractor that fails to submit a deviation request and Good Faith Efforts documentation waives the right to appeal OBO decisions related to this Policy.

If the contractor is awarded the contract and fails to achieve the established Participation Plan Percentage, the contractor must demonstrate to OBO its efforts to meet the Participation Plan Percentage and failure to do so based on circumstances that the contractor could not reasonably control. In determining whether the contractor made Good Faith Efforts to ensure full participation and achievement of the Participation Plan Percentage, OBO shall consider the following factors:

1. Whether the contractor designated an MWSBE liaison officer to administer the Contractor's MWSBE programs and to be responsible for maintenance of records of Good Faith Efforts.

2. Whether the contractor furnished prompt MWSBE Utilization Reports in a timely and accurate manner through the online Contract Monitoring System or via hard copy.

3. Whether the contractor responded to efforts to resolve disputes with MWSBEs, and genuinely attempted to resolve these issues.

4. Whether the contractor disclosed payment discrepancies timely and within the monthly reporting period;

5. Whether the contractor complied with the participation plan, unless the contractor received a deviation from the OBO Director and whether upon approval, the contractor made Good Faith Efforts to replace a removed MWSBE with another certified firm;

6. Whether the contractor furnished prompt written responses to written inquiries from the Director or any employee of OBO regarding the MWSBE's performance or information germane to the MWSBE's certification;

7. Whether the contractor ensured that at all times during the performance of any contract or subcontract the MWSBE firm is engaging in a commercially useful function as that term is defined in Chapter 15 of the City of Houston Code of Ordinances;

8. Whether the contractor provided the OBO information, or other material, that was factually accurate and free of material misrepresentation; and

9. Whether the contractor furnished prompt responses to requests for information, books and records needed to verify compliance from the department administering the Contract, the City Attorney and the City Controller;

10. Whether the contractor attended all meetings and mediation hearings as requested by the Director or his/her designee; and

11. How the contractor may be affected by change orders, with consideration given to the size of the change orders.

Change Orders.

The requirement to make Good Faith Efforts to achieve the approved Participation Plan Percentage is applicable to change orders. Contractors should make Good Faith Efforts to ensure that the Participation Plan Percentage remains substantially the same after the issuance of change orders. If a contractor cannot maintain substantially the same level of participation provided in the latest approved Participation Plan (Document 00470 or Document 00570) due to a change order, the contractor shall submit to the OBO Director and Contracting Department a Document 00571 (Post-Award Record of Good Faith Efforts) and Document 00572 (Post-Award Plan Deviation Request) in a timely manner that does not cause disruption to the project. In addition to other relevant factors, in evaluating whether Good Faith Efforts were made by the contractor to meet the Participation Plan Percentage despite change orders, the OBO Director shall consider the contractor's efforts to timely and efficiently deliver the project.

END OF DOCUMENT

Document 00820

WAGE SCALE AND PAYROLL REQUIREMENTS FOR ENGINEERING CONSTRUCTION

Wage Scale Requirements

1.1 Contractor and its Subcontractors must pay the general prevailing wage rates for building construction for each craft or type of worker or mechanic employed in the execution of any building construction or repair under the Contract in accordance with Chapter 2258 of the Texas Government Code and City of Houston, Texas Ordinance Nos. 85-2070, 2000-1114, 2001-152, 2006-91 and 2006-168, and 2009-247 all as amended from time to time. City Council has determined the prevailing wage rate in the locality in which the work is being performed, which is set forth in Exhibit "A".

1.2 This prevailing wage rate does not prohibit the payment of more than the rates stated.

1.3 In bidding, Contractor warrants and represents that it has carefully examined the classifications for each craft or type of worker needed to execute the Contract and determined that such classifications in Exhibit "A" include all necessary categories to perform the work under the Contract.

1.4 The wage scale for engineering construction is to be applied to all site work greater than 5 feet from an exterior wall of new building under construction or from an exterior wall of an existing building.

1.5 If Contractor believes that an additional classification for a particular craft or type of worker is necessary to perform work under the Contract, it must submit with its bid a request to the Contract Compliance Division of the Mayor's Office Of Business Opportunity ("OBO") to use an additional labor classification not listed in Exhibit "A" and specify the proposed new classification. OBO shall determine whether a proposed classification is already covered in Exhibit "A", and, if it is, specify which classification is appropriate. OBO's decision is conclusive. If OBO decides that a new classification is necessary, it will determine the appropriate prevailing wage rate for any resurveyed, amended, new, or additional craft or type of worker not covered by Exhibit "A". Such determination must be decided in accordance with procedures established by OBO, and in compliance with Chapter 2258 of the Texas Government Code and City of Houston, Texas Ordinance Nos. 85-2070, 2000-1114, 2001-152, 2006-91, 2006-168 and 2009-247 subject to City Council approval.

1.6 Contractor must not use any labor classification not covered by Exhibit "A" until such classification is established and approved for use by OBO.

1.7 A Contractor or Subcontractor who violates Chapter 2258 of the Texas Government Code must pay to the City, $60 per each worker employed for each calendar day or part of the day that the worker is paid less than the wage rates set forth in Exhibit "A".

1.8 The City may withhold money required to be withheld under Chapter 2258 of the Texas Government Code from the final payment to Contractor or earlier payments if City Council makes a determination that there is good cause to believe that Contractor has not complied with these provisions and Chapter 2258 of the Government Code, in which case the City may withhold the money at any time subsequent to the finding by City Council.

1.9 Contractor and Subcontractors must keep records specifying:

(1) the name and classification of each worker employed under the Contract; and

(2) the actual per diem wages paid to each worker, and the applicable hourly rate.

The records must be open at all reasonable hours for inspection by the officers and agents of the City.

1.10 The hourly cost of salary for non-exempt workers for labor in excess of 40 hours per worker per week, shall be calculated at 1.5 times the worker's base pay, plus 1.0 times fringe benefits, for the applicable craft and level.

Certified Payroll Requirements

2.1 Employees are paid weekly and payrolls are submitted weekly using the City of Houston's electronic payroll submission module, unless the prime Contractor has been instructed to do otherwise by the Office of Business Opportunity. When no work is done after a Contractor has started work, the Contractor is required to submit weekly compliance statement with no work performed. The payrolls must reflect the exact work and classification of the workers, the exact amount that they were paid. Workers must be paid the contracted amount (prevailing wage rates.) The Contractor will be penalized $60.00 a day for each employee who is underpaid per Texas Government Code 2258-023_for all contracts except Federally Funded Contract.

2.2 Payrolls must clearly indicate whether the worker worked inside or outside the building area.

2.3 Payrolls must be numbered and clearly marked: the first payroll as No. 1; etc. Payroll for the final week worked on the job should be marked "FINAL".

2.4 Payrolls must have "Week Ending" dates.

2.5 Payrolls must have employees' names, addresses, last four digits of the social security numbers, and job classifications. The job classifications must be the same as the classifications on the prevailing wage rate schedule.

2.6 A payroll deduction authorization form must be submitted for each employee for any deductions other than Federal and FICA taxes.

2.7 Employees must be paid overtime (time and a half) for all hours worked over 40 hours a week on both federally and City-funded contracts.

2.8 The Contractor has the responsibility to comply with all Internal Revenue Service rules and regulations. Contractors who submit certified payrolls with owner operators (truckers) must submit a signed tax liability statement from each worker acknowledging the worker's responsibility for payment of Federal Income Tax and FICA.

2.9 If the Contractor wants to use the apprentice wage rates for an employee, the apprenticeship certificates must be submitted to the Office of Business Opportunity in advance of the employee working on the project and appearing on the payroll.

2.10 A poster of the Prevailing Wage Rate Schedule should be clearly displayed on each job site, or in case of annual service agreements, in the Contractor's office.

2.11 The Contractor shall submit the “Certificate from Contractor Appointing Officer or Employee to Supervise Payment of Employees” (Exhibit “B”) to the Monitoring Authority listed in Document 00495 prior to final execution of the contract.

2.12 During the course of the work, ALL Subcontractors shall submit the “Certificate from Subcontractor Appointing Officer or Employee to Supervise Payment of Employees” (Exhibit “C”) to the Monitoring Authority listed in Document 00495.

2.13 Upon completion of the Project, as part of the contract-awarding department's total clearance process, the Office of Business Opportunity’s Contract Compliance Section must review whether the Wage Rate and Payroll Requirements were met and report the results to the department.

REST OF PAGE INTENTIONALLY LEFT BLANK

EXHIBIT "A"

LABOR CLASSIFICATIONS AND PREVAILING WAGE RATES
FOR
ENGINEERING CONSTRUCTION
2014

CLASSIFICATION	RATE	CLASSIFICATION	RATE
Asphalt Distributor Operator	$14.06	Milling Machine Operator - Fine Grade	$13.53
Asphalt Paving Machine Operator	$14.32	Mixer Operator	$10.33
Asphalt Raker	$12.36	Motor Grader Operator- Rough	$14.23
Asphalt. Shoveler	$11.68	Motor Grader Operator	$15.69
Broom or Sweeper Operator	$12.68	Oiler	$12.12
Bulldozer Operator	$11.81	Painter-Structures	$18.62
Carpenter- Rough	$12.49	Pavement Marking Machine Operator	$11.18
Concrete Finisher- Paving	$12.98	Pile Driverman.	$14.95
Concrete Finisher- Structures	$12.98	Pipe Layer	$12.12
Concrete Paving Curbing Machine Operator	$11.71	Reinforcing Steel Setter - Paving	$15.15
Concrete Paving Finishing Machine Operator	$13.07	Reinforcing Steel Setter - Structure	$14.39
Concrete Paving Joint Sealer Operator	$11.00	Roller Operator, Pneumatic - Self-propelled	$11.57
Concrete Paving. Saw Operator	$13.99	Roller Operator, Steel Wheel, Flat Wheel/Tamping	$11.57
Concrete Paving Spreader Operator.	$10.44	Roller Operator, Steel Wheel, Plant Mix Pavement	$11.92
Concrete Rubber . . .	$9.00	Scraper Operator	$13.47
Crane Clamshell Backhoe Derrick, Dragline, Shovel Operator	$12.71	Servicer	$13.97
Crusher and Screening Plant Operator	$11.29	Sign Installer - PGM	$8.54
Electrician * 3 Journeyman 2 Apprentice	$27.11	Slip Form Machine Operator	$11.07
Flagger	$10.33	Spreader Box Operator	$13.58
Form Builder/Setter- Structures	$12.23	Structural Steel Worker	$14.39
Form Liner- Paving and Curb	$12.34	Tractor Operator - Crawler Type	$13.68
Form Setter- Paving and Curb	$12.34	Tractor Operator- Pneumatic	$10.07
Foundation Drill Operator - Crawler Mounted	$17.43	Transit Mixer Truck Driver	$11.00
Foundation Drill Operator - Truck Mounted	$15.89	Truck Driver, Lowboy-float	$16.03
Front Loader Operator	$13.32	Truck Driver, Single-Axle - Heavy	$11.46
Laborer Common	$11.02	Truck Driver, Single-Axle - Light	$11.48
Laborer- Utility	$11.73	Truck Driver, Tandem Axle Semi-Trailer	$12.27
Manhole Builder	$9.00	Work Zone Barricade Servicer	$11.67
Mechanic	$16.96	Welders - Receive rate prescribed for craft performing operation to which welding is incidental	
* Apprentices- must be in an approved USDOL Program and cannot exceed ratios			

Engineering Prevailing Wages
Classification Definitions

Asphalt Distributor Operator
Drives distributor truck, sets spray bars and operates valves and levers to control distribution of bituminous material for highway surfacing. May oil, grease or otherwise service and make adjustments to equipment as needed. Performs other related duties.

Asphalt Paving Machine Operator
Operates paving machine that spreads and levels asphaltic concrete on highway subgrade. Controls movement of machine, raises and lowers screed, regulates width of screed. May, oil, grease, service and make adjustments to equipment as needed. Performs other related duties.

Asphalt Raker
Distributes asphaltic materials evenly over road surface by raking and brushing material to correct thickness; directs Laborers when to add or take away material to fill low spots or to reduce high spots. Performs other related duties.

Asphalt Shoveler
A general term used on construction work covering many unskilled classifications requiring work of a physical nature. A laborer works with all crews doing everything from pick and shovel work to cleaning up lumber with hammer, shoveling and placing concrete, uses air tools, cleans concrete joints and fills joints with sealing compound from bucket or with hose and nozzle from a central source, applies coating of oil to inside face of forms, may help set and strip forms, unloads and transports reinforcing steel, cures newly poured concrete, helps lower pipe into ditch for pipelayers, builds fences, works with dirt crew keeping construction layout stakes out of the way of dirt moving equipment.

Broom or Sweeper Operator
Operates a self-propelled machine to sweep and clean roadway surfaces. May oil grease, service and make adjustments to equipment as needed. Performs other related duties.

Bulldozer Operator
Operates a crawler tractor with a bulldozer mounted in front of chassis to level, distribute and push earth or other material. May operate a ripper attachment to break up rock or other hard material. May use a push block on front of tractor to push load scrapers. May oil grease, or otherwise service and make minor repairs to equipment as needed. Performs other related duties.

Carpenter, Rough
Works from plans to build, assemble, fit together, align, plum, and set in place forms for molding concrete structures. Forms may be wood, steel, aluminum, fiberglass or any other type of material. Checks form while concrete is placed. May install miscellaneous materials integral to concrete structures. May set precast concrete elements. Prepares for slipforming traffic rail and median barrier. May install permanent metal deck forms. May work with power tools Performs other related duties.

Concrete Finisher, Paving
Finishes the exposed surfaces of fresh concrete paving, median barrier and every element of concrete structures to the final grade and contour structures to the final grade and contour with the use of straight edges and steel trowels. Operates bridge deck finishing machine. Finishes concrete curbs and gutters. Finishes exposed surface of concrete after forms have been removed by patching imperfections with fresh concrete, rubbing surface with abrasive stone, and directing others in removing excess or defective concrete with power tools. Performs other related duties.

Concrete Finisher, Structures
A worker semi-skilled in concrete finishing who assists Concrete finisher by performing specific or general duties of lesser skill and keeping Concrete Finisher supplied with materials, tools, and supplies; cleaning working area an equipment; and holding materials and tools. Performs other related duties.

Concrete Paving Curbing Machine Operator
Operates self - propelled machine(s) which may or may not travel on concrete paving forms, spreading and leveling fresh concrete to grade by use of augers and screeds. May oil, grease or otherwise service and make adjustments to equipment as necessary. Performs other related duties.

Concrete Paving Finishing Machine Operator
Operates self - propelled machine(s) which may or may not travel on concrete paving forms, spreading and leveling fresh concrete to grade by use of augers and screeds. May oil, grease or otherwise service and make adjustments to equipment as necessary. Performs other related duties.

Concrete Paving Joint Sealer Operator
Cleans and seals joints requiring a hot or cold sealing compound in concrete paving, sidewalks, driveway and approach slabs. May oil, grease or make necessary repairs adjustments to equipment as needed. Performs other related duties.

Concrete Paving Saw Operator
Operates a water-cooled power saw with either or an abrasive blade to saw expansion and contraction joints in concrete paving. May also be used to saw asphaltic pavements. May oil grease or otherwise service and make necessary adjustments to equipment as needed. Performs other related duties.

Concrete Paving Spreader Operator
Operates self - propelled machine(s) which may or may not travel on concrete paving forms, spreading and leveling fresh concrete to grade by use of augers and screeds. May oil, grease or otherwise service and make adjustments to equipment as necessary. Performs other related duties.

Concrete Rubber
Finishes the exposed surface of concrete masonry after the forms have been removed by patching holes and broken corners with fresh concrete, rubbing surface with abrasive stone to remove rough spots, and removing high spots and defective concrete with hand chisel and hammer or pneumatic chisel and powered abrasive stone. Performs other related duties.

Crane, Clamshell, Backhoe, Derrick, Dragline, Shovel Operator
A worker who operates a lattice boom type crane can hoist and move materials, raise and lower heavy weights and perform other related operations. May be crawler type or rubber tired. May include placement of rock riprap, clamshell, dragline, pipe and pile driving operations. May oil, grease or otherwise service and make necessary adjustments to equipment as needed. Performs other related duties.

Crusher and Screed Plant Operator
Operates a crusher or screening plant through which rock is run to break it into crushed stone for construction or to control flow of materials not needed. May include minor repairs and may service and make necessary adjustments to equipment as needed. Performs other related duties.

Electrician *3 Journeyman 2 Apprentice
Plans and directs the layout of metal electrical conduit, installs wiring systems, switch-panels, buss bars, works on overhead distribution systems and underground distribution systems. Performs other related duties.

Flagger
A worker who directs traffic in or around a construction site. May use signs or devices to direct traffic. May help assemble, position and clean devices or equipment used to direct traffic. Must be able to effectively communicate with the public. May require certain level of training by TXDOT specifications. Performs other related duties.

Form Builder/Setter, Structures
Fits together, aligns and sets to grade metal and wooden forms for placement of concrete. Forms may be wood, steel, aluminum, fiberglass or any other type of material. Checks forms while concrete is placed. May install miscellaneous materials integral to concrete structures. May set precast concrete elements. Prepares for slipforming traffic rail and median barrier. May install permanent metal deck forms. May work with power tools. Performs other related duties.

Form Liner, Paving & Curb
Fits together, panels align and sets to grade metal and wooden forms for placement of concrete. Works with survey crew to set stringline for panels or moles. Performs other related duties.

Form Setter, Paving & Curb
Fits together, align and set to grade metal and wooden forms for placement of concrete paving and curbs. Works with survey crew to set stringline for paving, curb and gutter curb. Performs other related duties.

Foundation Drill Operator, Crawler Mounted
Operates a hole-drilling machine that is crawler mounted. May include geotechnical operations such as soils nails, rock nails, tiebacks, anchors and jet grouting. May oil, grease or otherwise service and make necessary adjustments to equipment as needed. Performs other related duties.

Foundation Drill Operator, Truck Mounted
Operates a hole drilling machine that is mounted on the rear of a rubber tired vehicle or truck. May include soils nails, rock nails, tiebacks, anchors and jet grouting. Drive truck from location to location or may have laborer who drives truck. May oil, grease or otherwise service and make necessary adjustments to equipment as needed. Performs other related duties.

Front End Loader Operator
Operates a rubber tired, skid steer or crawler type tractor with an attached scoop type bucket on front end. Machine is used to load materials from stockpiles, excavation, charging batch plants, loading and unloading trucks. May be used with attachments in lieu of the bucket. May oil, grease or otherwise service and make necessary adjustments to equipment as needed. Performs other related duties.

Laborer, Common
A general term used on construction work covering many unskilled classifications requiring work of a physical nature. A laborer works with all crews doing everything from pick and shovel work to cleaning up lumber with hammer, shoveling and placing concrete, uses air tools, cleans concrete joints and fills joints with sealing compound from bucket or with hose and nozzle from a central source, applies coating of oil to inside face of forms, may help set and strip forms, unloads and transports reinforcing steel, cures newly poured concrete, helps lower pipe into ditch for pipelayers, builds fences, works with dirt crew keeping construction layout stakes out of the way of dirt moving equipment.

Laborer, Utility
Performs a variety of manual duties, usually working in a utility capacity by working on multiple projects and tasks where demands require workmen with varied experience and ability to work without close direction. Unloads and transports reinforcing steel. May occasionally place and tie reinforcing steel. Directs common laborers in pouring concrete. Erects shoring and bracing. Assists in installation of pipe. Installs, operate and maintains dewatering systems. May assist equipment operators in positioning machines, verifying grades and signaling operators. Directs truck drivers and scraper operators to dumping positions to maintain grades as directed. Uses power tools and air tools. May work as lead man in a labor crew. His performance of a wide variety of construction jobs distinguishes him from a helper assigned to a specific craft. Installs and maintains erosion control. I s more or less a general utility construction worker. May be second step in learning a skill, and may later become a helper in a specific classification. Performs other related duties.

Manhole Builder
Constructs a means of permanent access to water and sewer lines for maintenance purposes. This work consists of laying brick or concrete slab at bottom of ditch up to an approximate grade line near the surface of the ground. Brick or block is normally laid to form a nearly circular manhole. Brick or block is laid in by eyesight and is normally to a plumb line. Chipped or culled brick can be used quite often is. No effort may be made to keep mortar off the face of the brick and joints are not pointed. May apply coating of concrete to interior and exterior surface. Performs other related duties.

Mechanic
Assembles, set up, adjusts and maintains and repairs all types of construction equipment and trucks. He may perform the duties of a welder in repair of equipment. Performs other related duties.

Milling Machine Operator, Fine Grade
Operates a power-driven milling machine that planes material of the roadbed and discharges the material into a hauling unit or a windrow. May oil, grease or otherwise service and make necessary adjustments to equipment as needed. Performs other related duties.

Mixer Operator
Performs a variety of manual duties, usually working in a utility capacity by working on multiple projects and tasks where demands require workmen with varied experience and ability to work without close direction. Unloads and transports reinforcing steel. May occasionally place and tie reinforcing steel. Directs common

laborers in pouring concrete. Erects shoring and bracing. Assists in installation of pipe. Installs, operate and maintains dewatering systems. May assist equipment operators in positioning machines, verifying grades and signaling operators. Directs truck drivers and scraper operators to dumping positions to maintain grades as directed. Uses power tools and air tools. May work as lead man in a labor crew. His performance of a wide variety of construction jobs distinguishes him from a helper assigned to a specific craft. Installs and maintains erosion control. Is more or less a general utility construction worker. May be second step in learning a skill, and may later become a helper in a specific classification. Performs other related duties.

Motor Grader Operator, Rough
Operates a motor grader. Equipment is used to grade excavation and embankment and to lay asphalt, base and other materials. May blade haul roads and do other general motor grader work, but does not perform finish grade work to close specification tolerances. This operator may be a learner in the first phase of learning the skills of motor grader work. May oil, grease or otherwise service and make necessary adjustments to equipment as needed. Performs other related duties.

Motor Grader Operator
Operates a motor grader. Equipment is used to grade excavation and embankment and to lay asphalt, base and other materials. May blade haul roads and do other general motor grader work, but does not perform finish grade work to close specification tolerances. This operator may be a learner in the first phase of learning the skills of motor grader work. May oil, grease or otherwise service and make necessary adjustments to equipment as needed. Performs other related duties.

Oiler
A learner or semi-skilled worker who under the direction of the watch engineer May oil and grease or otherwise service all engines and necessary equipment as needed. He may clean and paint engine room as needed. Performs other related duties.

Painter, Structures
Paints and stains structural steel and concrete surfaces of bridges, retaining walls, or other structures. Directs cleaning and abrasive blasting of surfaces prior to painting or staining. Performs other related duties.

Pavement Marking Machine Operator
Operates machine used in laying paint stripes or markers on all types of paving. Loads machine with appropriate materials and may walk or ride on machine. May oil, grease or otherwise service and make necessary adjustments to equipment as needed. Performs other related duties.

Piledriverman
Sets in place, aligns, plumbs directs driving of timber, concrete, steel, pipe and any other type of piling. Sets, drives and pulls steel, concrete and other types of sheet piling. Rigs pile and leads and bracing. Signals operator. Splices piles before and after driving. Directs pile cutoff. May direct jetting or drilling equipment in connection with installing piles to grade. Performs other related duties.

Pipelayer
Installs concrete, clay, steel, ductile iron, plastic, corrugated pipe and any other type of pipe for storm drainage, water lines, gas lines and sanitary sewer lines. Lays underground communication and electrical ducts. May install and set electrical ground boxes, hand holes, manholes, inlets and other structures. Caulks joints, make threaded and flanged connections. Installs valves and other accessories. Performs other related duties.

Reinforcing Steel Setter, Paving
Works from plans to lay out and install reinforcing steel within forms or in mats of concrete paving. May direct unloading of material. Determines rigging required to complete work. Gives direction to reinforcing steel worker (helper) or common or utility laborers. May install miscellaneous materials integral to concrete structure or paving. May work with power tools. Performs other related duties.

Reinforcing Steel Setter,Structure
Works from plans to lay out and install reinforcing steel within forms or in mats of concrete paving. May direct unloading of material. Determines rigging required to complete work. Gives direction to reinforcing steel worker (helper) or common or utility laborers. May install miscellaneous materials integral to concrete structure or paving. May work with power tools. Performs other related duties.

Roller Operator, Pneumatic, Self-Propelled
Operates a self-propelled machine with either steel wheels pneumatic tires, which is used to compact and smooth all bituminous materials. May oil, grease or otherwise service and make necessary adjustments to equipment as needed. Performs other related duties.

Roller Operator, Steel Wheel, Flat Wheel/Tamping
Operates a self-propelled machine with either steel wheels or pneumatic tires which is used to compact earth fills, subgrade, flexible base and all other types of materials except bituminous. May oil, grease or otherwise service and make necessary adjustments to equipment as needed. Performs other related duties.

Roller Operator, Steel Wheel, Plant Mix Pavement
Operates a self-propelled machine with either steel wheels pneumatic tires, which is used to compact and smooth all bituminous materials. May oil, grease or otherwise service and make necessary adjustments to equipment as needed. Performs other related duties.

Scraper Operator
Operates a self-contained wheeled tractor scraper both self loading or assisted by crawler tractors or other scrapers. Used to excavate and transport earth or other materials. May oil, grease or otherwise service and make necessary adjustments to equipment as needed. Performs other related duties.

Servicer
Drives a truck, which carries various fuels, oils, greases and filters. Must have knowledge of and is responsible for the correct oiling and greasing and changing of filters on equipment according to the manufacturers' specifications. Uses compressed air grease guns, wrenches and other tools. May make adjustments to clutches, brakes and other mechanical items. Keeps record of service preventive maintenance records. May have laborer assisting him. May require CDL if driving truck on public highways. Performs other related duties.

Sign Installer (PGM)
Sets forms, reinforcing steel, anchor bolts and pours concrete for Sign foundations. Fabricates and erects pipe and angle Frameworks by bolting, welding or other means prior to installation of signs that are normally prefabricated. Works from plans in location and drilling holes for proper location and alignment of signs. May direct hoisting of signs into place. Fastens signs to framework by bolting and other means. Locates and sets lighting brackets. May perform other work associated with signing projects. Supervises sign erector helper. Performs other related duties.

Slip Form Machine Operator
Cleans and seals joints requiring a hot or cold sealing compound in concrete paving, sidewalks, driveway and approach slabs. May oil, grease or make necessary repairs adjustments to equipment as needed. Performs other related duties.

Spreader Box operator
Operates spreader box by adjusting hopper and strike off blade so that the gravel, stone or other material may be spread to a specific depth on road surface during seal coat and surface treatment operations. May oil, grease or otherwise service and make necessary adjustments to equipment as needed. Performs other related duties.

Structural Steel Worker
Works from plans to lay out and install reinforcing steel within forms or in mats of concrete paving. May direct unloading of material. Determines rigging required to complete work. Gives direction to reinforcing steel worker (helper) or common or utility laborers. May install miscellaneous materials integral to concrete structure or paving. May work with power tools. Performs other related duties.

Tractor operator, Crawler Type
Operates a crawler tractor with a bulldozer mounted in front of chassis to level, distribute and push earth or other material. May operate a ripper attachment to break up rock or other hard material. May use a push block on front of tractor to push load scrapers. May oil grease, or otherwise service and make minor repairs to equipment as needed. Performs other related duties.

Tractor Operator, Pneumatic
Operates a gasoline or diesel powered agricultural tractor that tows compaction rollers, plow, disc. water tanks, scrapers and other similar operations. May use other miscellaneous attachments. May oil, grease or otherwise service and make necessary adjustments to equipment as needed. Performs other related duties.

Traveling Mixer Operator
Drives a gasoline or diesel truck upon which is mounted a concrete mixer. Operates concrete mixer and dumps concrete on the grade, into forms or into concrete pumps or buckets. Cleans mixer drum. May require CDL license for on highway use. May service and make necessary adjustments for proper operation of equipment. Performs other related duties.

Truck driver, lowboy-Float
Drives a heavy-duty diesel powered truck to which is attached a trailer upon which heavy equipment is hauled. Driver is often required to operate heavy equipment to load or unload the lowboy. May require CDL license for on highway use. May service and make necessary adjustments for proper operation of equipment. Performs other related duties.

Truck driver, Single Axle, Heavy
Drive a light capacity truck for transporting loads of construction material. The truck is of single rear axle type, may have various kinds of beds attached, such as dump, flat bed, tank, etc. May require CDL license for driving on highway. May services and make necessary adjustments for proper operation equipment. Performs other related duties.

Truck driver, Single Axle-Light
Drive a light capacity truck for transporting loads of construction material. The truck is of single rear axle type, may have various kinds of beds attached, such as dump, flat bed, tank, etc. May require CDL license for driving on highway. May service and make necessary adjustments for proper operation equipment. Performs other related duties.

Truck Driver, Tandem Axle, Semi-Trailer
Drives a diesel-powered tractor pulling a semi trailer hauling materials. Hauls dirt, rock, aggregates or other material. May require CDL license for driving on highway. May service and make necessary adjustments for proper operation of equipment. Performs other related duties.

Work Zone Barricade Servicer
Fabricates, erects and maintains temporary traffic control devices, including arrow boards, signs, barricades, channelizing devices, barrels and all message boards. May operate a truck during traffic control operations.

WELDERS - Receives rate for craft being performed to which welding is incidental.

EXHIBIT "B"

CERTIFICATE FROM CONTRACTOR APPOINTING OFFICER OR EMPLOYEE TO SUPERVISE PAYMENT OF EMPLOYEES

Project Name _____

_____

Project WBS#: _____Date _____

(I) (We) hereby certify that (I am) (we are) the **Prime Contractor** for _____

_____
(specify type of job)

in connection with construction of the above-mentioned Project, and that (I) (we) have appointed_____, whose signature appears below, to supervise the payment of (my) (our) employees beginning_____, 20___; that he/she is in a position to have full knowledge of the facts set forth in the payroll documents and in the statement of compliance required by the Copeland Act and the City of Houston, which he/she is to execute with (my) (our) full authority and approval until such time as (I) (we) submit to the City of Houston a new certificate appointing some other person for the purposes hereinabove stated.

_____ _____
(Identifying Signature of Appointee) Phone:

Witness/Attest:

_____
(Name of Firm or Corporation)

By:_____ By:_____
(Signature) (Signature)

_____ _____
(Title) (Title)

NOTE: This certificate must be executed by an authorized officer of a corporation or by a member of a partnership, and shall be executed prior to and be submitted with the first payroll. Should the appointee be changed, a new certificate must accompany the first payroll for which the new appointee executes a statement of compliance required by the Copeland Act and the City of Houston.

EXHIBIT "C"

CERTIFICATE FROM SUBCONTRACTOR APPOINTING OFFICER OR EMPLOYEE
TO SUPERVISE PAYMENT OF EMPLOYEES

Project Name _____

_____

Project WBS#: _____Date _____

(I) (We) hereby certify that (I am) (we are) the **Sub-Contractor** for _____

_____
(specify type of job)

in connection with construction of the above-mentioned Project, and that (I) (we) have appointed_____, whose signature appears below, to supervise the payment of (my) (our) employees beginning_____, 20___; that he/she is in a position to have full knowledge of the facts set forth in the payroll documents and in the statement of compliance required by the Copeland Act and the City of Houston, which he/she is to execute with (my) (our) full authority and approval until such time as (I) (we) submit to the City of Houston a new certificate appointing some other person for the purposes hereinabove stated.

_____ _____
(Identifying Signature of Appointee) Phone:

Witness/Attest:

_____
(Name of Firm or Corporation)

By:_____ By:_____
(Signature) (Signature)

_____ _____
(Title) (Title)

NOTE: This certificate must be executed by an authorized officer of a corporation or by a member of a partnership, and shall be executed prior to and be submitted with the first payroll. Should the appointee be changed, a new certificate must accompany the first payroll for which the new appointee executes a statement of compliance required by the Copeland Act and the City of Houston.

END OF DOCUMENT

Document 00830

TRENCH SAFETY GEOTECHNICAL INFORMATION

1.0 DOCUMENT INCLUDES

A. Trench Safety Geotechnical Information: Geotechnical information obtained for use in design of the trench safety system is included as an attachment to this document.

2.0 RELATED DOCUMENTS

A. Section 02260 - Trench Safety Systems.

END OF DOCUMENT

ENGINEERING CORP.

December 16, 2014

Mr. Shaheen Chowdhury, P.E.
Kuo & Associates, Inc.
10700 Richmond Avenue, Suite 113
Houston, Texas 77042

Re: Trench Safety Geotechnical Letter Report
24-Inch Waterline Along West Bellfort Street from Stella Link Road to Buffalo Speedway
COH WBS No. S-000900-0125-3
Houston, Texas
AEC Report No. G148-14

Dear Mr. Chowdhury,

Aviles Engineering Corporation (AEC) is pleased to present the trench safety geotechnical letter report for the above referenced project. The purpose of this letter is to provide geotechnical information and trench safety guidelines for trench excavations, which are required for installation of underground utilities using open cut methods. Details of the geotechnical investigation, including boring location plan, subsurface investigation, laboratory testing, ground water depths, and boring logs are presented in AEC Report No. G148-14, dated December 16, 2014.

Based on provided drawings, approximately 4,550 linear feet of 24 inch diameter waterline will be installed by open cut method along West Bellfort Street from Stella Link Road to Buffalo Speedway. The invert depth of the 24 inch diameter waterline along the alignment typically varies from approximately 10 to 11.5 feet.

The underground utilities should be designed and constructed in accordance with the latest edition of the City of Houston Standard Construction Specifications (COHSCS). The Contractor is responsible for designing, constructing and maintaining safe excavations for installation of underground utilities by open cut methods; the excavations should not cause any distress to existing structures nearby, if any, during construction.

Excavation Stability: Cohesive soils in Houston area contain many secondary features which affect trench wall stability, including sand seams and slickensides. Slickensides are shiny weak failure planes which are commonly present in fat clays; such clays often fail along these weak planes when they are not laterally supported, such as in an open excavation. The Contractor should not assume that slickensides and sand seams/layers/pockets are absent where not indicated on the logs.

Trenches 20 feet and Deeper: OSHA requires that shoring or bracing for trenches 20 feet and deeper be specifically designed by a licensed professional engineer.

Trenches Less than 20 Feet Deep: Trench excavations that are less than 20 feet deep may be shored, sheeted and braced, or laid back to a stable slope for the safety of workers, the general public, and adjacent structures, except for excavations which are less than 5 feet deep and verified by a competent person to have no cave-in potential. The excavation should be in accordance with Occupational Safety and Health Administration (OSHA), Safety and Health Regulations, 29 CFR, Part 1926. Recommended OSHA Soil Types for excavation design for existing soils can be found on Plates C-1 and C-2 in AEC report G148-14. Fill material should be considered OSHA Class "C" soils. Submerged soils should also be considered OSHA Class "C" soils, unless dewatering is conducted to lower the ground water level below the bottom of the excavation.

Critical Height: Critical Height is defined as the height a slope will stand unsupported for a short time; in cohesive soils, it is used to estimate the maximum depth of open-cuts at given side slopes. Critical Height may be calculated using the soil cohesion. Values for various slopes and cohesion are shown on Plate D-1 in AEC Report G148-14. Cautions listed below should be exercised in use of Critical Height applications:

1. No more than 50 percent of the Critical Height computed should be used for vertical slopes. Unsupported vertical slopes are not recommended where granular soils or soils that will slough when not laterally supported are encountered within the excavation depth.

2. If tension cracks occur, no cohesion should be assumed for the soils within the depth of the crack. The depth of the first waler should not exceed the depth of the potential tension crack. Struts should be installed before lateral displacement occurs.

3. Shoring should be provided for excavations where limited space precludes adequate side slopes, e.g., where granular soils will not stand on stable slopes and/or for deep open cuts.

4. All excavation, trenching and shoring should be designed and constructed by qualified professionals and personnel in accordance with OSHA requirements.

Plate D-2 in AEC Report G148-14 presents the maximum (steepest) allowable slopes for OSHA Soil Types for excavations less than 20 feet. If limited space is available for the required side slopes, the space required for the slope can be reduced by using a combination of bracing and open cut as illustrated on Plate D-3 in AEC Report G148-14.

The following method can be used for calculating earth pressure against bracing for open cut trenches. Lateral pressure resulting from construction equipment, traffic loads, or other surcharge should be taken into account by adding the equivalent uniformly distributed surcharge to the design lateral pressure. Hydrostatic pressure, if any, should also be considered. The active earth pressure at depth z can be determined by Equation (1); the design soil parameters are presented on Plates C-1 and C-2 in AEC report G148-14.

$$p_a = (q_s + rh_1 + r'h_2)Ka - 2c\sqrt{K_a} + r_w h_2 \qquad \text{.....Equation (1)}$$

where,
- p_a = active earth pressure, psf.
- q_s = uniform surcharge pressure, psf.
- γ, γ' = wet unit weight and buoyant unit weight of soil.
- h_1 = depth from ground surface to ground water table.
- h_2 = $z-h_1$, depth from ground water table to the point under consideration.
- z = depth below ground surface for the point under consideration.
- K_a = coefficient of active earth pressure.
- c = cohesion of clayey soils.
- γ_w = unit weight of water, 62.4 pcf.

Pressure distribution for the design of struts in open cuts for clay and sand are illustrated on Plates D-4 through D-6 in AEC Report G148-14. If there is water behind the bracing, hydrostatic pressure should be included in the design.

Bottom Stability: In open-cuts, the possibility must be considered of the bottom failing by heaving, due to the removal of the weight of excavated soil. In fat and lean clays, heave normally does not occur unless the ratio of Critical Height to Depth of Cut approaches one. In silty clays and granular soils, heave can occur if an artificially large head of water is created due to installation of impervious sheeting in bracing the cut; this can be mitigated if ground water is lowered below the excavation by dewatering the area. Guidelines for evaluating bottom stability in clay soils are presented on Plate D-7 in AEC Report G148-14.

If the excavation extends below the ground water level and the soils at or near the bottom of the excavation are mainly sands, silts or low plasticity clays having low undrained shear strength, the bottom can fail by blow-out (boiling) at the bottom when a sufficient hydraulic head exists. The potential for boiling or in-flow of granular soils increases where the ground water is pressurized. If the braced excavation terminates in granular soils or low-plasticity clays below ground water, we recommend the ground water table be lowered to at least 5 feet below the excavation to avoid bottom boiling in accordance with the latest edition of the COHSCS.

If the braced excavation terminates in a cohesive soil, but is underlain by granular soils and is subject to hydraulic pressure, the factor of safety against bottom failure can be conservatively calculated (neglecting soil cohesion) from the Equation (2) presented below:

$$F = \gamma_s h_s / \gamma_w h_w \qquad \text{.....Equation (2)}$$

where, F = safety factor against blow-out (minimum value of 1.25 is recommended)
γ_s = unit weight of cohesive soil above sand layer, pcf
h_s = height of cohesive soil above sand layer, feet
γ_w = unit weight of water, pcf
h_w = hydrostatic head, feet

The most effective means of improving the bottom stability is to lower the ground water table to at least 5 feet (or more as determined by analysis) below the bottom of the braced excavation.

Calcareous nodules, slickensides, and silt/sand seams within cohesive soil strata encountered may become sources of localized instability when they are exposed during excavation, especially when they become saturated. Such soils have a tendency to slough or cave in when not laterally confined, such as in open cut excavations. The Contractor should be aware of the potential for cave-in of the soils. Low plasticity soils (silts and clayey silts) will lose strength and may behave like granular soils when saturated.

Excavation Dewatering: Ground water levels will fluctuate depending on seasonal rainfall and other climatic events. Dewatering may or may not be required depending on location, excavation depth, ground water level, and time of year construction is in progress. We recommend that the Contractor include the cost of dewatering as a line item in his/her bid package and that he/she verify ground water depths, seepage rates and areas where ground water is pressurized and dewatering is required. The Contractor is responsible for designing, installing and maintaining a dewatering system for ground water control and taking precautions to avoid distress to existing structures nearby, as a result of dewatering. Ground water control should be in accordance with the latest edition of the COHSCS. The following is intended to provide guidance to the Contractor for dewatering.

Seepage in sandy lean clays/fat clay will probably be low. Seepage influx will be primarily from sand seams and pockets. Gravity drainage with sumps can be effective in removing seepage water in these clayey soil zones.

Greater seepage and slope stability problems may be experienced in silt/silty sand/sand strata, especially when they are at or below ground water depth. Where excavations extend into water-bearing silt or sand, well points or eductors may be used to lower the ground water level. Well points are not generally effective below a depth of about 15 feet below the top of the well point. Multi-staged well points or deep wells with turbine or submersible pumps will be required when the dewatering depth is greater than 15 feet. Generally, the ground water depth should be lowered at least 5 feet below the excavation bottom to be able to work on a firm surface. Extended and/or extensive dewatering can result in settlement of existing structures in the vicinity; the Contractor is to take necessary precautions to minimize the effects on these structures.

Construction Monitoring: The Contractor is responsible for monitoring nearby existing structures and taking necessary action to minimize impact to adjacent structures. Daily inspections of excavations, the adjacent areas, and protective systems shall be made by a competent person for evidence of a situation that could result in possible cave-ins, indications of failure of protective systems or other hazardous conditions. An inspection should be conducted by the competent person prior to the start of work and as needed throughout the shift. Inspections shall also be made after every rainstorm or other hazard increasing occurrence.

To avoid surcharging the excavation walls, stockpiling of the excavated materials immediately adjacent to the excavation face should be prohibited. We recommend the stockpiled materials be placed at least 6 feet away from the edge of the excavation face, and no higher than 4 feet. Construction equipment working near the trench may also induce excessive surcharge loads; we recommend appropriate shoring or shield system be provided considering such impact in addition to lateral earth/water pressure.

The information contained in this letter report summarizes conditions found on the dates the borings were drilled. The boring logs attached in AEC Report G148-14 are true representations of the soils encountered at the specific boring locations on the dates of drilling. Reasonable variations from the subsurface information presented in this report should be anticipated. If conditions encountered during construction are significantly different from those presented in this report; AEC should be notified immediately.

AEC appreciates the opportunity to be of service on this project and looks forward to our continuing association during the construction phase of this project and on future projects.

AVILES ENGINEERING CORPORATION
(TBPE Firm Registration No. F-42)

STATE OF TEXAS
WILBER L. WANG
99226
LICENSED
PROFESSIONAL ENGINEER

Wilber L. Wang, M.Eng., P.E.
Project Engineer

Reports Submitted: 2 Kuo & Associates, Inc.
1 File

Z:\Engineering\Reports\2014\148-14 SWTP Contract 87 Waterline - Kuo & Associates (Wilber)\G148-14 Trench Safety Letter.docx

City of Houston
Pay or Play Program Requirements

I. Pay or Play Program Overview

A. Purpose

The Pay or Play Program was established with Ordinance 2007-534 on July 1, 2007 and is governed by Executive Order 1-7. The Pay or Play Program (POP Program) creates a more level playing field and enhances fairness in the bid process between competing contractors that choose to offer health benefits to their workforce and those who do not. The program also recognizes and accounts for the fact that there are cost associated with health care of the uninsured citizens of the Houston and Harris County area.

B. Program Elements

1. <u>Covered contracts</u>:

I.) Advertised after July 1, 2007 or which is executed on or after the effective date of this Executive Order.
II.) Contracts valued at or above $100,000.00 (contract) and $200,000.00 (sub-contract) including contingencies, amendments, supplemental terms and/or change orders.
III.) Professional Service, Construction, and Service type contracts.

2. <u>Contracts not covered</u>:

I.) Any contract in which the primary purpose is procurement of property, goods, supplies, and or equipment.
II.) An inter-governmental contract, inter-governmental agreement or purchasing cooperative.

3. <u>Covered employees</u>: This program applies to employees of a covered contractor or subcontractor, including contract labor, who are over age 18, work at least 30 hours per week <u>and</u> work any amount of time under a covered city contract or subcontract.

4. <u>Pay or Play Option</u>:

I.) "Pays" by contributing $1.00 per covered employee per regular hour for work performed under the contract with the City; or
II.) "Plays" by providing health benefits to covered employees. Health benefits must meet or exceed the following standards:

- The **employer will contribute no less than $150 per covered employee per month** toward the total premium cost.
- The **employee contribution, if any amount, will be no greater than 50% of the monthly premium cost and no more than $150 per month.**

Note: (1)A contractor is deemed to have complied with section 5.4 of E.O. 1-7 with respect to a covered employee who is not provided health benefits if the employee refuses the benefits and the employee's contribution to the premium is no more than $40 per month. (2) If applicable the contractor has the option to both Pay and Play.

5. **Exemptions/Waivers:** The City of Houston will award a contract to a contractor that neither Pays nor Plays only if the contractor has received an approved waiver (Form POP-4 requested by City departments only).

6. **Administration**: Contractor performance in meeting Pay or Play program requirements will be managed by the contracting department. The Office of Business Opportunity (OBO) has administrative oversight of the program, including audit responsibilities (department compliance). Questions about the program should be referred to the Department POP Liaison an updated contact list is available on http://www.houstontx.gov/obo/popforms.html or call Gracie Orr with the Office of Business Opportunity at 832-393-0633.

II. Documentation and Reporting Requirements

A. Document that must be signed and returned to administering department with the bid/proposal.

1.) City of Houston Pay or Play Program Acknowledgment Form (Form POP-1) acknowledges bidder/proposers' knowledge of the program and its requirements, and the intention to comply.

B. Documents that must be signed and returned to administering department within a period designated by the department's Contract Administrator, upon notification of low bidder or successful proposer status:

1.) Certification of Compliance with Pay or Play Program (Form POP-2)

****Note - Contractors that opt to "play" must provide proof of coverage, including document from insurance provider, and names of covered employees***.

2.) List of Subcontractors (Form POP-3)

****Note- Review the affidavit statement at the bottom of this form for further important POP Compliance information.***

C. Contractors reporting requirements:

1.) Contractors that opt to Pay
Provide monthly reports to administering department, detailing names of employees, hours worked, exemptions (if any) and amount owed. (Form POP-5)

2.) Contractors that opt to Play
Provide periodic reports to the contract administrator showing proof of coverage (insurance premium invoice or insurance card) reporting schedule will be determined by administering department based on length of contract. (Form POP-7)

3.) Employee Waiver Request
Contractor may request POP program waiver by submitting the request on POP-8 if the employee is less than 18 years old, employee has other health coverage such as through spouse or parents, or Medicare/Medicaid.

Note proof of coverage must be provided in the form of a copy of the employee's insurance card. (Remove social security numbers if applicable)

4.) Contractors shall submit an initial report with the second invoice to the department. Payments based on monthly reports are due to the contracting department with submission of the following month's invoice. Payments may be made out to the City of Houston preferably via cashier check or business check.

III. Compliance and Enforcement

The Office of Business Opportunity will audit program compliance. Contractors willfully violating or misrepresenting POP program compliance will be subject to corrective and/or punitive action, including but not limited to the assessment of fines and penalties and/or debarment. The Pay or Play Program Requirements Form and all other POP Forms are available for downloading from the City of Houston's Website at http://www.houstontx.gov/obo/popforms.html

Document 00931

REQUEST FOR INFORMATION

1. PROJECT No.: S-000900-0125-4
2. RFI No.: _____
3. PROJECT NAME: 24-Inch Water Line Along West Bellfort From Buffalo Speedway to Stella Link
4. CONTRACTOR: [Contractor Name]
5. CONTRACT No.: _____
6. SPECIFICATION Nos.: _____
7. DRAWING Nos.: _____
8. RESPONSE CODE: [__] CRITICAL [__] ROUTINE 9.DATE RESPONSE REQUIRED: _____
10. INFORMATION REQUIRED:

11. _____ _____
CONTRACTOR (Signature) TITLE DATE

12. RESPONSE:

13. _____ _____
PROJECT MANAGER (Signature) DATE

14. If Contractor believes the response given in Item 12 requires an adjustment in Contract Price or Contract Time, Contractor shall submit a timely proposal so as not to delay Contractor's Work in accordance with General Conditions, Article 7 - Changes in the Work.

END OF DOCUMENT

Section 01110
SUMMARY OF WORK

PART 1 G E N E R A L

1.01 SECTION INCLUDES

A. Summary of the Work includes Work covered by Project Description, Contract documents, Definition, Cash Allowances, Incentive Allowances, City Furnished Products, Work Sequence, Coordination of Work, Contractor Use of Premises, Street Cut Ordinance, Warranty, Interpretation of Conflicts, General Construction Notes, Existing Utilities, Water Lines, Storm Sewer, Sanitary Sewer, Pavement Replacement, Storm Water Pollution Prevention Plan, Alternative Construction Methods, Additional Conditions for Substantial Completion, Soil Conditions & Environmental Site Assessment (ESA), Potential Petroleum Contaminated Areas (PPCA), Safety Systems, CenterPoint Energy Electrical Facilities, CenterPoint Energy Underground Gas Facilities, AT&T Texas/SWBT Facilities, Tree Protection, and Type of Pipe for Construction of Water Line.

1.02 PROJECT DESCRIPTION

A. Surface Water Transmission Program (SWTP) consists of major improvements to transmission system to convert from primarily groundwater to surface water in order to comply with the Harris-Galveston Coastal Subsidence District's (HGCSD) regulatory plan. Program includes transmission and distribution of surface water and associated consolidation of groundwater plants in the City.

B. The project is a combination of water line construction, public utility adjustments and pavement restoration which initiates at the intersection of Stella Link Road & West Bellfort Avenue and extends east along West Bellfort Avenue up to 300 feet west of Buffalo Speedway intersection.

1.03 WORK COVERED BY CONTRACT DOCUMENTS

This work will include, but not limited to, the following:

A. Construction of approximately 5,000 linear feet of 24-inch water line (by a combination of open cut and tunneling), valves, connections and appurtenances along the proposed alignment from Stella Link Road along

West Bellfort Avenue to Buffalo Speedway.

B. Construction of approximately 100 linear feet of 12-inch water line with valves, connections, and appurtenances at West Bellfort and South Main Street (US Highway 90A) to connect to existing 12-inch water line along South Main Street. The line will be constructed by trenchless method as shown on the drawings.

C. Construction of approximately 50 linear feet of 8-inch water line with valves, connections, and appurtenances at Station 14+50 to connect to existing 8-inch water line on the south side of West Bellfort. The line will be constructed by means of auger as shown on the drawing. Construction of approximately 365 linear feet of 8-inch water line with valves, connections, and appurtenances along West Bellfort beginning at Station 41+50 toward the east and connecting to proposed 24-inch water line. The line will be constructed by trenchless method as depicted in the drawings.

D. Construction of 115 linear feet of 6-inch fire hydrant lead by open cut and 175 linear feet, by augering method.

E. Tunneling operations under the intersection of West Bellfort and South Main Street (US Highway 90A) (from Sta. 30+33 to Sta. 33+53 along West Bellfort):

1. Unless otherwise approved by the Project Manager, perform tunneling from western limit of tunnel at West Bellfort.
2. Perform tunnel excavation as per recommendation in the Geotechnical Investigation Report.
3. Due to anticipated subsurface conditions the ability to dewater the tunnel excavation will be limited. Contractor to follow recommendations outlined in the Geotechnical Report for dewatering methods.
4. Provide specific instrumentation monitoring plan, in accordance with Section 02425(LD) Tunnel Excavation and Primary Liner. Submit to Project Manager for approval the monitoring plan and locations of instrumentation. Plan shall include monitoring of the existing bridge structure over the West Bellfort.
5. Install 24-inch water line in accordance with Section 02517 – Water Line in Tunnels.
6. Notify TxDOT 48 hours (2 business days) before commencement of construction to allow for proper inspection and coordination of work days and traffic control plans.

F. Complete removal and replacement of approximately 3,125 square yards of existing concrete pavement on West Bellfort along water line alignment. Provide lime content of 6 percent (as per geotechnical report)

of dry unit weight, in lieu of minimum 5 percent noted in Section 02336 – Lime Stabilized Subgrade. The stabilized soil should be compacted to 95 percent of their ASTM D 698 (Standard Proctor) dry density at a moisture content ranging from optimum to 3 percent above optimum.

G. Removal and replacement of approximately 175 linear feet of 24-inch storm sewer along the project.

H. Connection to existing 24-inch water line at Station 4+33. Remove existing butterfly valve with box and install new 24-inch butterfly valve with service manhole at Station 4+40.

I. Connection to existing 30-inch water line at Station 49+91. Remove existing butterfly valve with box and install new 30-inch butterfly valve with service manhole at Station 49+85.

J. Installation of Cathodic Protection (including test stations and sacrificial anodes) as shown on the plans.

K. Removal and replacement of approximately 690 linear feet of 4-inch PVC sleeves for landscape irrigation stubouts along the project.

1.04 DEFINITION

A. Large Diameter Water Lines: Water Lines 24-inches in diameter and larger. References to large diameter water lines shall apply to pipe, valves and appurtenances 24-inch and larger.

B. Small Diameter Water Lines: Water Lines 20-inches in diameter and smaller. Unless otherwise noted in the Contract Documents, requirements pertaining to large diameter water lines do not apply to pipe valves and appurtenances 20-inches in diameter and smaller.

1.05 CASH ALLOWANCES

A. Include the following specific Cash Allowances in the Contract Price under provision of Document 00700 - General Conditions, Paragraph 3.11.

1. Street Cut Permit: Allow stipulated sum of $2,500.00 for Street Cut Permit Application Fee(s) as described in Paragraph 1.11.

1.06 INCENTIVE ALLOWANCES

A. None

1.07 CITY FURNISHED PRODUCTS

A. Item Furnished by City for Installation and Final Connection by Contractor:

1. None.

1.08 WORK SEQUENCE

A. Perform critical locates per Contract Drawings within 30 days from Notice to Proceed. Field verify dimensions and conditions before commencing work. Report discrepancies to Project Manager before commencing work. Submit documentation of work completion to the Project Manager.

B. Submit sequence of construction for review by Project Manager. Proposed sequence of construction shall address proposed method and timing of major construction activities. Refer to Section 01326 – Construction Schedule (Bar Chart) for specific details.

C. Begin Work on the project from the east side of Stella Link Road and continue east along West Bellfort to west of Buffalo Speedway with following sequence:

1. Phase 1: Implement phase 1 Traffic Control Plan as shown in the plan. Construct the 24" water line by open cut construction method along the median under Phase 1 per City of Houston Traffic Division. Repair the pavement with curb.

   Do not close more than 3 median openings at one time. Maintain an active “Rolling Closure” along West Bellfort Avenue. Once the first median opening can be reopened, the contractor may move traffic devices to fourth median, and so on.

2. Phase 2: Remove existing pavement (where required as shown on the plans) and construct proposed 24 inch water line across South Main Street (US Highway 90A) by tunneling. Construct 12 inch water line on the north side of the tunnel at the east side of US Highway South Main Street (US Highway 90A). Repair pavement and sidewalk.

3. Phase 3: Construct proposed 8 inch water line along south side of

West Bellfort Avenue beginning around Station 41+50 toward the east to around Station 44+35. Connect proposed 8 inch water line to proposed 24 inch water line. Connect proposed fire hydrants as shown on plans to proposed 24 inch water line.

D. Verify with Project Manager, proposed locations of vent piping prior to installation. Adjust locations as directed, no separate pay.

E. Completely restore east and west bound lanes as shown in drawings and provide a serviceable pavement section in each traffic control phase prior to performing construction activities in the subsequent traffic control phases. Refer to Traffic Control Plan General Notes for further instruction.

1.09 COORDINATION OF WORK

A. Schedule the Work with any other contractors of any trade or discipline working adjacent to the project site prior to and during construction.

B. Schedule construction operations with Project Manager, Traffic Management, Maintenance Division, and private utilities.

C. Coordinate with Houston Parks and Recreation Department regarding the irrigation system before construction within the median. Contact Marilu De La Fuente, Adoption Program Administrator of Parks Department, at 832-395-7029 or Marilu.delafuente@houstontx.gov.

D. Coordinate with Texas Department of Transportation through the UIR (Utility Installation Review) website (https://apps.dot.state.tx.us/UIRPRO/) at least forty eight (48) hours (2 business days) prior to construction of the water line within TxDOT right-of-way to allow for proper inspection and coordination of work days and traffic control plans. Do not start within TxDOT right-of-way until the construction start date and inspection periods have been coordinated with TxDOT. Details are shown in the TxDOT permit (as attached to end of this document). The permit must be renewed by the contractor prior to its expiration date.

E. No METRO facilities and bus routes anticipated to be affected during construction activities.

The Contractor shall contact METRO Bus Operations a minimum of seven (7) to ten (10) business days prior to construction changes. The contact information is Carl Taylor, Carl.Taylor@ridemetro.org 713-615-7219 or Shirley Mitchell, Shirley.Mitchell@Ridemetro.org 713-615-7212.

F. No Houston ISD School facilities anticipated to be affected in the area during construction activities.

G. Coordinate with the management of Pine Terrace Apartment complex along the south side of West Bellfort Avenue for the proposed connection to existing 8-inch water line within the water line easement at the east side of Ice Palace Drive. Contact the Manager Marie Gucman at 713-664-2663.

H. Notify with South Campus Sports Association (SCSA) located along the north side of West Bellfort Avenue between Stella Link Road and US Highway 90A. SCSA has a driveway to the parking lot just west of west tunnel shaft. Contact Greg Waller, President of South Campus Sports Association, at 713-220-4790 or email address GregWaller@andrewskurth.com.

I. Notify with Houston Chinese Church located at the northeast corner of West Bellfort Avenue and US Highway 90A intersection. Contact Church Administrator Roy Chen at 713-663-7550.

J. Schedule testing and inspection of cathodic protection system and protective coating for pipe and valves with independent consultant. Contact David Pedersen at 832-395-3833 once consultant has performed all testing and inspections.

K. Coordination of the Work: Refer to Section 01312 – Coordination and Meetings.

1.10 CONTRACTOR USE OF PREMISES

A. Comply with procedures for access to site and Contractor's use of rights-of-way as specified in Section 01145 - Use of Premises

B. Construction Operations: City's rights-of-way and easements.

C. Utility Outages and Shutdown: Provide notification to City and private utility companies (when applicable) a minimum of 48 hours, excluding weekends and holidays, in advance of required utility shutdown. Schedule all work as required. Submit for review and approval proposed plan for outages and shutdown minimum of 14 days prior to proposed scheduled outages/shutdown. Conduct coordination meeting with City and other affected parties minimum of seven (7) days prior to proposed outage/shutdown.

D. Work to be done to lines, grades, elevations, and locations as shown on Drawings.

E. Prevent overstress of any structure, and any part or member of it, during construction. This applies to existing work and structures affected by operations. Check effect of operations in this regard, and provide temporary supports and connections required to assure safety and stability of both new and existing work and to prevent overstress of any part, no separate pay item.

F. Coordinate activity schedule and extend full cooperation to other contractors who have responsibilities either concurrent with, proceeding or following this Contractor's time along work site. Ensure availability of access, availability of selected portions of this area to others and provide appropriate information for planning purposes to other contractors.

G. Traffic Control:

1. Traffic control plan responsive to Texas Manual on Uniform Traffic Control Devices (TMUTCD) and sealed by a Registered Professional Engineer is incorporated into Drawings. If traffic control will be implemented with modification to plan provided, submit letter confirming that decision.

2. Traffic control provided is based on assumption there is no conflict with traffic control from separate projects within construction limits. Adjust work sequence as necessary to prevent traffic control conflicts, or submit revised traffic control plans to the City of Houston Project Manager for approval ten working days prior to implementation. These plans shall be drawn to scale on reproducible mylars and shall be sealed by a licensed Engineer in the State of Texas. Traffic Operations Division representative’s approval is required to accept the proposed changes.

3. Maintain vehicular and pedestrian access to adjacent properties throughout Work.

4. Modifications to Traffic Control Plan included in Drawings, specific Traffic Control Plan for pavement restoration with drainage, and adjustment in work sequence as necessary to prevent traffic control conflicts, require a submission of a revised traffic control plans sealed by Registered Professional Engineer and conform to TMUTCD at no additional cost. Submit plan to Project Manager for approval.

5. Refer to Traffic Control Plan General Notes for further instruction.

6. During work within TxDOT right-of-way, follow traffic control operation as per TxDOT requirements.

H. Work which pertains to any tunneling operation at the intersection of West Bellfort and South Main Street (US Highway 90A) will be allowed 24 hours per day, provided above ground activities do not conflict with provisions of City of Houston Code of Ordinances, Section No. 40-28 and work does not occur on a Sunday or holiday without prior written approval. No night work shall occur at any other locations including residential areas. A partial list of work pertaining to tunneling operation is as follows:

1. Tunnel Excavation and incidental work such as muck removal and hauling, ventilation, lighting, survey control of tunnel line and grade, etc.

2. Tunnel Primary Liner.

3. Ground Water Control and Ground Stabilization
.
4. Pipe Installation.

5. Tunnel Grouting.

I. Implement groundwater control methods, while maintaining accessibility to driveways and cross streets.

J. Maintain local driveway access to residential and commercial properties adjacent to work areas. Provide temporary driveway access to driveways in accordance with Section 01555 – Traffic Control and Regulation and Section 01145 – Use of Premises. Coordinate with business owners and residents.

K. City's Utility Maintenance Division is not bound to assist the Contractor in locating existing utilities during construction. Contractor must verify location of existing utility lines prior to commencement of pipe laying operations.

L. Working multiple and separate crews during construction is allowed, as approved by Project Manager, and if doesn't conflict with traffic control plans or exceed minimum restoration limits for water line work.

M. Restore damaged areas as per Section 02922 – Sodding.

N. Field Office: A Field Office is required on this project. See Section 01520 – Temporary Field Office.

O. Coordinate with CenterPoint Energy to brace and protect existing street lights, conduits and power poles along project limits as required. Reestablish power to lights within 24 hours should power be disrupted. No Separate pay item.

P. All mail boxes, if necessary, should be temporarily relocated and restored. No separate pay item.

Q. Install and maintain Project Identification Sign in accordance with the Section 01580. No Separate pay, include cost of such work in the contract price listed for Mobilization.

1.11 STREET CUT ORDINANCE

A. Excavations on or under pavement in the City's right-of-way must have a permit. Comply with City of Houston, Texas Ordinance No. 2000-1115, an ordinance amending Chapter 40 of the Code of Ordinances, Houston, Texas, relating to excavating in the Public right-of-way and comply with amendments provided by Texas Ordinance No. 2006-0595 including the following fee schedule:

Schedule of Permit Application Fees*

Permit Application Fee:	
Excavation by Tunneling, Jacking and Boring only (Pavement on the City's ROW is not disturbed)	$137.60
All other Methods of Excavations (Pavement on the City's ROW is cut or altered)	$192.65
Administrative Fee	$27.51
Street Cut Permit Extension	$27.51
Steel Plate Temporary Surface	$55.04
Data Entry Fee:	
Data Entry of Application by the City Personnel	$55.04

* All fees/charges are non-refundable

B. Comply with the latest edition of street cut "New Pavement Repair and Pavement Replacement details".

Contractor shall comply with requirements from Chapter 12 of the City of Houston's Infrastructure Design Manual (dated December, 2014), entitled Street Cut Requirements".

C. The bid items for the cost of street cut pavement repair and replacement identified on the drawings are included in the Bid Form Part B (Document 00410 B).

D. Obtain all required permits and signs prior to performing any methods of construction involving street excavation in the existing pavement.

1.12 WARRANTY

A. Comply with warranty requirements in accordance with Document 00700 – General Conditions.

1.13 INTERPRETATION OF CONFLICTS

A. Should conflicts occur in Contract Documents, request interpretation before proceeding with work (i.e. submit Request For Information or RFI). Such requests shall first be preceded by a diligent investigation into Contract Documents. Contain evidence of such investigation in requests for interpretation.

1.14 GENERAL CONSTRUCTION NOTES

A. Notify Texas One Call at (713) 223-4567/811 or 800-344-8377 and Lone Star Notification Center at 800-669-8344, and the City of Houston Department of Public Works and Engineering at (832) 394-9098 or via fax at (832) 395-4424, at least 48 hours prior to commencement of work.

B. Field verify existing facilities shown on the drawings by whatever means necessary (metal detection, probes, excavation, survey, others) prior to excavation for proposed utilities. No separate pay item.

C. Call the Traffic Management and Maintenance Division of the City of Houston Public Works and Engineering Department when work is scheduled near signal conduits within the City of Houston (832) 395-3000. Call at least five working days in advance.

D. These plans and the surveys upon which they are based are tied into the official City of Houston survey system in compliance with ordinance No. 69-1978. City of Houston survey markers and monuments referenced have been included in this plan set.

E. Comply with OSHA Regulations and State of Texas laws concerning excavation, trenching and shoring as specified in City of Houston Ordinance No. 87-1457.

F. Conduct construction operation under this contract in conformance with the erosion control practices described in Document 01410 “TPDES Requirements” and Document 01570 “Storm Water Pollution Control” and the Storm Water Pollution Prevention Plan included in the appendix of the project manual.

1.15 EXISTING UTILITIES

A. Public and private utility lines and customer service lines may exist that are not shown on the construction drawings. Locate, maintain and protect the integrity of these lines. Hand excavation may be required. Anticipate such service lines exist and repair them if damaged during construction. No separate pay will be made for repairs. Include cost in unit price for work in appropriate sections.

B. Coordinate with the proper utility company to relocate or divert any utility in conflict with proposed construction so as not to disrupt service of the utility. Restore relocated or diverted utility to its original condition and location upon completion of construction.

C. Do not interrupt existing water service. Construct proposed water lines and transfer service per City of Houston requirements prior to the commencement of any underground construction that may interfere with existing water service.

D. Maintain existing water service and sanitary sewer service within construction area until construction of the new system is complete.

1.16 WATER LINES

A. This project shall be built by means of open-cut, tunneling and any other trenchless method allowed by the specification and as noted on the drawings.

B. Water lines shall be constructed in accordance with current City of Houston specifications for large diameter and small diameter water lines wherever applicable.

C. Small Diameter Water Lines

1. Trenchless construction methods will be used for water line construction unless otherwise shown on the construction drawings and project manual or otherwise instructed by the City Engineer.

2. Conduct all construction operation under this contract in conformance with the erosion control practices described in Document 01410 "TPDES Requirements" and Document 01570 "Storm Water Pollution Control" and the Storm Water Pollution Prevention Plans included in the construction drawings. Work identified in this project falls under Small Construction Activity with area disturbed to be one or more acres but less than five acres. TPDES requirements applicable to Small Construction Activity will apply.

D. Large Diameter Water Lines

1. Open cut method will be used for water line construction except the tunnel segment. A segment will be constructed by tunneling method.

1.17 STORM SEWER

A. Maintain adequate drainage during construction and restore drainage ditch or structure disturbed during construction to satisfaction of owning authority. Construction storm runoff shall comply with final draft of the Storm Water Management Handbook for construction activities, as prepared by Harris County, HCFCD and the City of Houston in compliance with NPDES requirements.

B. During any storm sewer and/or lead replacement, pull to the last full joint.

C. Remove siltation in existing and proposed storm sewer systems (if necessary) that result from construction activities associated with project.

D. Existing improvements/conditions associated with culverts, wing-walls, headwalls and other end treatments, shall be maintained, if not shown on Drawings to be removed, or replaced to equal or better conditions including quality of materials.

1.18 SANITARY SEWER

A. The contractor is fully responsible for damages to the existing sanitary sewer facilities as a result of this project. Construct sanitary sewers in compliance with the latest City specifications for sewer construction, and tested as specified in the City test procedure for either liquid or air, including amendments and revisions thereto. Place embedment and

backfill for sanitary sewers in accordance with City of Houston standard drawing unless otherwise noted.

B. Maintain service to all sewers during construction. Locate sanitary sewer service laterals affected by construction prior to water line construction. City does not warranty the location or number or any sanitary leads shown in plans.

C. If a damaged sanitary sewer line is being replaced as a result of this construction, transfer of service stubs from the existing to the proposed sanitary sewer must be included. Remove and replace damaged stubs to right-of-way line, as determined by Project Manager.

D. In accordance with the Section 01506, contractor to provide continuous sewer services to the users during removal and replacement of the sanitary line services, if any. No separate pay item. Include cost in unit price for work in appropriate sections.

1.19 PAVEMENT REPLACEMENT

A. Drawings identify pavement to be removed and replaced.

B. Contractor's Trench Safety System (reference Section 02260), special shoring (reference Section 02317, 1.08, 3.04D, 3.05F, H & I), and means and methods shall protect adjacent lanes of pavement that are not scheduled for removal and replacement. Contractor assumes the risk for damaged pavement and, unless otherwise directed by the City, the Contractor shall remove and replace the damaged pavement in accordance with Section 02951 and the Street Cut Ordinance at no additional cost to the City. Damage includes but is not limited to pavement cracks, chipped or broken pavement, and voids under adjacent pavement that is to remain. City may also assess additional costs to the Contractor related to the damaged pavement such as City laboratory testing and inspection.

C. Where work requires cutting existing pavement, provide positive shoring extending a minimum of 6-inches above pavement surface.

D. Unless otherwise directed by the City, provide full-depth saw-cut 2-inch maximum away from pavement construction joints (ex., deformed metal joints, tooled joints, partially sawcut joints, etc.). Saw cut distance from joint shall be minimum necessary for a clean straight edge, and if the joint is at the crown the saw cut shall be as close to the crown as possible.

E. Dowels at existing expansion joints shall be saw cut to eliminate possible damage to adjacent pavement that is scheduled to remain. The cost for

this saw cut is incidental to the pavement removal and disposal pay item(s).

F. If existing pavement thickness is less than 7-inches thick, then dowels will be deleted and the Non Doweled Joint detail will be used instead, unless directed otherwise by the City.

G. Pavement that is scheduled to be removed and replaced shall be removed no earlier than fourteen (14) days prior to excavating to install new utilities and/or pavement.

1.20 STORM WATER POLLUTION PREVENTION PLAN

A. Storm Water Pollution Prevention Plan for this project is governed by Section 01410 TPDES Requirements, Document 01570 “Storm Water Pollution Control” and the layouts provided in the project manual. Comply with Storm Water Pollution Prevention Plan as detailed in project manual.

1.21 ALTERNATE CONSTRUCTION METHODS

A. Alternate construction methods will be allowed in accordance with applicable details and specifications in Contract Documents at no additional cost to City of Houston provided City will receive substantial benefit from alternate construction method(s). Contractor accepts responsibility for all additional cost of geotechnical investigations and incidental items, including any re-design that may be necessary. Submit following for review by City Engineer prior to commencement of any construction activity if such alternate construction methods are to be considered. All modifications as listed below must be signed and sealed by a Licensed Professional Engineer registered in State of Texas prior to submittal to City Engineer.

1. Revisions to horizontal or vertical alignment.
2. Revisions to access manhole details, if applicable.
3. Revisions to line valve and operator manhole details, if applicable.
4. Revisions to vacuum relief valve vault details, if applicable.
5. Revisions to cathodic protection system, if applicable.
6. Proposed construction method and detailed plan of approach.
7. Location of access shafts, if applicable.
8. Proposed traffic control plan.
9. Revisions to material specifications.
10. Impact of revised alignment on hydraulic surge potential on line segment in question and all adjacent line segments, existing or proposed.

Failure of agreement between Contractor and Project Manager over proposed alternate construction methods would require construction to vertical and horizontal alignment, and details as per original contract documents.

1.22 ADDITIONAL CONDITIONS FOR SUBSTANTIAL COMPLETION

A. In addition to requirements outlined in Document 00700 – General Conditions, for Contractor to be substantially complete with the Work and call for inspection, the Project Manager to confirm the following conditions have been met or completed:

1. All pay items complete.
2. All testing shall be completed and accepted by Project Manager.
3. All safety-related systems and equipment shall be installed, accepted by manufacturer's representative and approved for use.
4. All safety related work including pavement striping and signing to be complete.
5. No additional condition described in Paragraph 1.09 may be included in Contractor's punch list.

1.23 SOIL CONDITIONS & ENVIRONMENTAL SITE ASSESSMENTS (ESA)

A. Bidder(s) must consider the soil conditions and findings provided in the Geotechnical, Phase I ESA, and Phase II ESA. These reports have been provided along with Drawings and Project Manual.

1.24 POTENTIALLY PETROLEUM CONTAMINATED AREAS (PPCA)

A. (Phase I Environmental Site Assessment of the site identified seven sites with possible Recognized Environmental Conditions on and near the subject project alignment area.) Refer to Phase I ESA Report prepared by HVJ Associates, Inc. for additional Information. The report recommended for further investigation in the form of Phase II ESA.

1.25 SAFETY SYSTEMS

A. The plans and any attendant drawings (including shop drawings, as built drawings or record drawings), addenda, change orders and specifications, prepared by Lockwood, Andrews & Newnam, Inc., or Kuo & Associates, Inc. do not extend to or include designs or systems pertaining to the safety

of the construction contractor or its employees, agents, or representatives in their performance of the work. The seal of Lockwood, Andrews and Newnam's, and Kuo & Associates registered/licensed professional engineers hereon does not extend to any such safety systems that may now or hereafter be incorporated in Drawings. Contractor shall prepare or obtain the appropriate safety systems, including the plans and specifications required by House Bill 662 and 665 enacted by the Texas Legislature.

1.26 CENTERPOINT ENERGY ELECTRICAL FACILITIES

A. Overhead lines may exist on the property. The location of overhead lines has not been shown on these drawings since they are clearly visible, but the Contractor should locate them prior to beginning any construction. Texas law, section 752, Health & Safety Code forbids all activities that occur in close proximity to high voltage lines, specifically:
   1. Any activity where person or things may come within six (6) feet of live overhead high voltage lines; and
   2. Operating a crane, derrick, power shovel, drilling rig, pile driver, hoisting equipment, or similar apparatus within 10 feet of live overhead high voltage lines.

   Parties responsible for the work, including contractors, are legally responsible for safety of construction workers under this law. This law carries both criminal and civil liability. To arrange for lines to be turned off or removed call CenterPoint Energy at (713) 207-2222.

   Activities on or across CenterPoint Energy Fee or easement property
   No approval to use, cross or occupy CenterPoint Fee or easement property is given. If contractor need to use CenterPoint property, please contact CenterPoint Energy's Right of Way Division at (713) 207-6248 or (713) 207-5769.

B. Location of CenterPoint Energy electrical facilities, are approximate and have not been verified by actual field check.

C. Hand dig within one (1) foot of CenterPoint Energy underground electrical facilities.

D. Overhead lines exist on and adjacent to the project site, which may be live during the construction period. Facilitate work so as not to interrupt services unless permitted by CenterPoint Energy.

E. Exercise caution when working in the vicinity of CenterPoint Energy electrical cable, underground wiring and overhead lines.

F. When excavation within 5 feet and beneath a depth of 3 feet below existing grade of a utility pole or anchor to which CenterPoint Energy facilities are attached, coordinate with CenterPoint Energy to secure or brace these poles and anchor prior to excavation. The cost of CenterPoint Energy's efforts is incidental. "No separate pay item".

1.27 CENTERPOINT ENERGY UNDERGROUND GAS FACILITIES

A. Locations of CenterPoint Energy main lines (to include CenterPoint Energy, IntraState Pipeline, LLC. where applicable) are shown in an approximate location only. Service lines are usually not shown. The Contractor shall contact the Utility Coordinating Committee at (713) 223-4567 of 1-800-669-8344 a minimum of 48 hours prior to construction to have main and service lines field located.

B. When CenterPoint Energy pipeline markings are not visible, call (713) 945-8036 or (713) 945-8037 (7:00 am to 4:30 pm) for status of line location request before excavation begins.

C. When excavating within eighteen inches (18") of the indicated location of CenterPoint Energy facilities, all excavation must be accomplished using non-mechanized excavation procedures.

D. When CenterPoint Energy facilities are exposed, sufficient support must be provided to the facilities to prevent excessive stress on the piping. No separate pay.

E. For emergencies regarding gas lines call (713) 207-4200.

F. The contractor is fully responsible for any damages caused by his failure to exactly locate and preserve these underground facilities.

G. All gas facilities are the property of CenterPoint Energy, unless otherwise noted.

1.28 AT&T Texas/ SWBT Facilities

A. The locations of AT&T Texas/SWBT facilities are shown in an approximate way only. The Contractor shall determine the exact location before commencing work. He agrees to be fully responsible for any and all damages which might be occasioned by his failure to exactly locate and preserve these underground utilities.

B. The Contractor shall call 1-800-344-8377 a minimum of 48 hours prior to

construction to have underground lines field located.

C. When excavating within eighteen inches (18") of indicated location of AT&T Texas/SWBT facilities, excavations must be accomplished using non-mechanized excavation procedures. When boring, the contractor shall expose AT&T Texas/SWBT facilities.

D. When AT&T Texas/SWBT facilities are exposed, provide support to prevent damage to conduit ducts or cables. When excavating near telephone poles the Contractor shall brace the pole for support.

E. The presence or absence of AT&T Texas/SWBT underground conduit facilities or buried cable facilities shown on these plans does not mean that there are no direct buried cables or other cables in conduit in the area.

F. Please contact the AT&T Texas Damage Prevention Manager Mr. Roosevelt Lee Jr. at (713) 567-4552 or email at rl7259@att.com, if there are questions about boring or excavating near AT&T Texas/SWBT facilities.

1.29 TREE PROTECTION

A. Notify City of Houston Parks and Recreation Department representative Mr. Dale Temple, City Forester, at (832) 395-2205, at least two (2) weeks in advance of clearing, cutting, pruning, or planting any tree.

B. Adhere to the requirements of Specification Section 01562 - Tree and Plant Protection, Section 02915 – Tree Planting, and Tree Protection Plan provided in Contract Drawings. Protect existing trees and landscaping. Remove and replace 4-inch PVC sleeves for landscape irrigation stubouts as discussed in section 1.03 (K).

PART 2 PRODUCTS

2.01 TYPE OF PIPE FOR CONSTRUCTION OF WATER LINE

A. This water line is intended to be used as both transmission and distribution line. The pipe material is to be steel or ductile iron. Drawings have been prepared for large diameter water line on basis of steel pipe except where specific pipe material is identified. Certain details pertaining to all types of pipe have been included when a specific difference exists. Include costs associated with changes in installation and construction, tie-ins, valves, vaults, and other appurtenances to accommodate alternate pipe in unit cost of water line construction.

B. Only one type of pipe material may be used where material alternates are allowed. When adjoining proposed large diameter water line to existing large diameter water line of different pipe material and/or coating, provide a flanged connection insulating kit, and isolation test station, unless otherwise approved by Project Manager. Specifications and design criteria have been provided for these types of pipe. Contractor is responsible to ensure type of pipe selected and resulting methods and means complies with requirements and limitations set forth herein and on Drawings including traffic control.

C. Unless specifically identified on Drawings, types of materials used are Contractor's option. Manufacturer and subcontractor selection are within Contractor's control and will not warrant time extensions due to failure to produce required deliverables within Contract Time. Extension of Contract Time due to non-delivery of Contractor's choice of pipe material, which affects Contractor's schedule, will not be allowed. Submit pipe material and other critical submittals in a timely manner to allow sufficient review time by Project Manager and to maintain construction schedule.

D. Call outs for bends and fittings are not identified on Drawings in profile view. Provide bends and fittings as required to comply with invert elevations shown in profile view of Drawings.

E. Clearly identify different pipe classes of the same pipe material using colored concrete or similar marking as approved by Project Manager.

F. Provide electrical isolation when adjoining to pipe with different material or coating. Coating on the welded restrained portions of the piping shall be identical to the coating on the adjoining pipe sections.

G. No separate payment for restrained or welded joints for large diameter water lines.

PART 3 E X E C U T I O N (Not Used)

END OF SECTION

Kutubul Mainuddin

From: TxDOT Utility Installation Review System [jcoope2@dot.state.tx.us]
Sent: Wednesday, January 14, 2015 11:02 AM
To: Kiran Punyamanthula
Cc: uir-dev@ttimail.tamu.edu; faith.burnett@txdot.gov; rowmsustaff@dot.state.tx.us; kyle.emanuel@txdot.gov; jose.ramos@txdot.gov; bcash@dot.state.tx.us; cheryl.riley@txdot.gov; jguice1@dot.state.tx.us; larry.whittington@txdot.gov; ROW_MSUSTAFF@txdot.gov; Kiran Punyamanthula; Kutubul Mainuddin
Subject: Amendment approved. Notify TxDOT (using UIR) 2 business days prior to construction

TxDOT Utility Installation Request System

Installation Request No.: HOU20141028081022

Amendment approved. Notify TxDOT (using UIR) 2 business days prior to construction

Installation Owner: CITY OF HOUSTON.
Office Name: Kuo & Associates Inc.
Applicant Name: Kiran Punyamanthula
Phone: 713-975-8769
Mobile:
Email: kiran.p@kuoassociates.com
Route: UA0090
Control Section: 002709

Details: https://apps.dot.state.tx.us/apps/UIRPROv2/ucInt/ucLogin.asp

Notice of Proposed Installation:
http://apps.dot.state.tx.us/apps/UIRPROv2/x7180/HOU/14/10/28/081022/HOU20141028081022_Notice_1.pdf

Approval Form:
http://apps.dot.state.tx.us/apps/UIRPROv2/x7180/HOU/14/10/28/081022/HOU20141028081022_Approval.pdf

Amendment Result:
http://apps.dot.state.tx.us/apps/UIRPROv2/x7180/HOU/14/10/28/081022/HOU20141028081022_AmendmentResult_1_17.pdf

Installation Owner is required to keep a copy of the Notice of Proposed Installation, Approval Form, and any approved amendments at the job site at all times.

From: Samir Goel
To: kiran.p@kuoassociates.com
CC: uir-dev@ttimail.tamu.edu; faith.burnett@txdot.gov; rowmsustaff@dot.state.tx.us; kyle.emanuel@txdot.gov; jose.ramos@txdot.gov; bcash@dot.state.tx.us; cheryl.riley@txdot.gov; jguice1@dot.state.tx.us; larry.whittington@txdot.gov; ROW_MSUSTAFF@txdot.gov; kiran.p@kuoassociates.com; kutubul@kuoassociates.com
Sent: 1/14/2015 11:01:41 AM

Note: If you are an Outlook user, please disable the option to remove extra line breaks.

You can do this in Outlook by going to: Tools / Options / Preferences / Email Options

Approval Form
Online version 11/2005

APPROVAL

To Kiran Punyamanthula
City of Houston Public Works Department
10700 Richmond Avenue Ste # 113
Houston, TX 77042

Date 11/5/2014
Application No. HOU20141028081022
District App. No. 14-2783
Highway UA 0090
Control Section 002709
Maintenance Section South Harris
County Harris

TxDOT offers no objection to the location on the right-of-way of your proposed utility installation, as described by Notice of Proposed Utility Installation No. HOU20141028081022 (District Application No. 14-2783) dated 11/5/2014 and accompanying documentation, except as noted below.

Not applicable

When installing utility lines on controlled access highways, your attention is directed to governing laws, especially to Texas Transportation Code, Title 6, Chapter 203, pertaining to Modernization of State Highways; Controlled Access Highways. Access for serving this installation shall be limited to access via (a) frontage roads where provided, (b) nearby or adjacent public roads or streets, (c) trails along or near the highway right-of-way lines, connecting only to an intersecting roads; from any one or all of which entry may be made to the outer portion of the highway right-of-way for normal service and maintenance operations. The Installation Owner's rights of access to the through-traffic roadways and ramps shall be subject to the same rules and regulations as apply to the general public except, however, if an emergency situation occurs and usual means of access for normal service operations will not permit the immediate action required by the Utility Installation Owner in making emergency repairs as required for the safety and welfare of the public, the Utility Owners shall have a temporary right of access to and from the through-traffic roadways and ramps as necessary to accomplish the required emergency repairs, provided TxDOT is immediately notified by the Utility Installation Owner when such repairs are initiated and adequate provision is made by the Utility Installation Owner for convenience and safety of highway traffic.

The installation shall not damage any part of the highway and adequate provisions must be made to cause minimum inconveniences to traffic and adjacent property owners. In the event the Installation Owner fails to comply with any or all of the requirements as set forth herein, the State may take such action as it deems appropriate to compel compliance.

It is expressly understood that the TxDOT does not purport, hereby, to grant any right, claim, title, or easement in or upon this highway; and it is further understood that the TxDOT may require the Installation Owner to relocate this line, subject to provisions of governing laws, by giving thirty (30) days written notice.

If construction has not started within six (6) months of the date of this approval, the approval will automatically expire and you will be required to submit a new application. You are also requested to notify this office prior to commencement of any routine or periodic maintenance which requires pruning of trees within the highway right-of-way, so that we may provide specifications for the extent and methods to govern in trimming, topping, tree balance, type of cuts, painting cuts and clean up. These specifications are intended to preserve our considerable investment in highway planting and beautification, by reducing damage due to trimming.

Special Provisions:
Special Provisions Specifications

You are required to notify TxDOT 48 hours (2 business days) before you start construction to allow for proper inspection and coordination of work days and traffic control plans. Use the UIR website for the 48-hour notification. DO NOT start construction until you have coordinated the construction start date and inspection with TxDOT. You are also required to keep a copy of this Approval, the Notice of Proposed Installation, and any approved amendments at the job site at all times.

Texas Department of Transportation
By James Hunt
Title Director of Maintenance
District Houston

SPECIAL PROVISIONS

1. This permit is void if installation is not complete within one year from date of approval.

2. Traffic control in utility work zones shall conform to applicable specifications to ***Texas Manual on Uniform Traffic Control Devices , Part 6.***

3. This permit issued subject to a ***separate*** traffic control plan being filed and approved by the Area Engineer or the person named on this permit. No work within the State right-of-way shall be performed until this approval has been granted.

4. It is mutually agreed and understood that the implementation and maintenance of the traffic control plan shall be the responsibility of the grantee and the grantee shall indemnify and save harmless the State from any and all damages or losses that may develop due to this project.

5. Grantee shall contact Mr. William Flores at 713-866-7120, or Mr. Ugonna Ughanze, P.E., Traffic Systems Manager, at 713-802-5661 for CTMS or traffic signal locates.

6. Highway Crossings shall be bored or tunneled. Bored hole or tunnel shall not exceed the diameter of the casing by more than one inch, and shall extend the full width of the pavement and ten feet on each side thereof or five feet behind the back of the curbs.

7. Casing shall consist of smooth wall pipe with welded joints and seams, and shall be continuous, extending past the top of the back slope of the outermost ditches or five feet behind the back of the curbs.

8. Any adjustment or relocation of this installation necessary because of future highway construction shall be accomplished without cost to the Texas Department of Transportation.

TEXAS DEPARTMENT OF TRANSPORTATION
Specifications for Placing Utility Lines Within The
Right-of-Way of State maintained Highways

1. All excavations within the right-of-way and not under surfacing shall be backfilled according to the **Standard Specifications For Construction and Maintenance of Highways, Streets, and Bridges,** Item 400.3, Section C. All surplus material shall be removed from the right-of-way and the excavation finished flush with surrounding natural ground.

2. Where sodding is disturbed by excavation or backfilling operations, such areas shall be replaced by seeding. Slopes 4:1 or steeper shall be replaced with block sodding. This work shall be in accordance with Texas Department of Transportation (TxDOT) specifications.

3. Highway crossings under surfaced roads and surfaced crossroads within the right-of-way shall be placed by boring. Boring shall extend from crown line to crown line.

4. Use of water or other fluids in connection with boring operations will be permitted only in sufficient quantity to lubricate boring bit and provide a smooth flow of cuttings. Jetting will not be permitted.

5. Pipeline material and design for high pressure lines must meet the minimum Federal Safety Standards for Liquid and Gas Pipelines.

6. Operations on the highways shall be performed in such a manner that operating equipment and excavated material are kept off the pavement at all times.

7. Barricades and warning signs, and flagmen when necessary, shall be provided by the contractor or owner. One-half the traveled portion of the roadway must be open to traffic at all times.

8. Work performed on railroad right-of-way is subject to the concurrence of the railroad company. Approval of this request by TxDOT does not relieve the utility owner or its agent of any obligation to also obtain the approval of the railroad company. Work performed within the waterways, such as rivers, creeks, bayous, and drainage ditches, is subject to the concurrence of appropriate regulatory agencies. The utility owner or its agent shall obtain overall environmental clearance with all appropriate regulatory agencies prior to beginning construction. Approval of this request by TxDOT does not relieve the utility owner or its agent of this obligation.

9. All manhole covers shall be installed flush with ground level. The roof of communications manholes shall be at least five feet below ground.
10. No raw sewage or effluence from septic tanks, car washes, or similar facilities shall be drained in State highway storm sewer systems.

11. Power transmission line crossings over highways shall be constructed and maintained a minimum of 22 feet above the surface of the traffic lanes. For power lines above 50,000 volts, the clearance shall be increased in accordance with National Electric Safety Code as published in the National Bureau of Standards, Handbook 30.

12. Communications lines crossing over the highway shall be constructed and maintained a minimum of 18 feet above the surface of traffic.

13. Work covered by this permit shall be so conducted that is will not interfere in any way highway construction or repair work, or any State maintenance work that may be done on this road. In the event such interference occurs, you will cease operations in the area until such time as the road work referred to above is completed.

14. The Grantee certifies that its storm water runoff to the State's right-of-way shall not be contaminated by any industrial processes or significant pollutants, and the State shall not be held liable for any pollutants entering State right-of-way through storm water connections.

Texas Department of Transportation

Amendment Request Application
Online version 4/2006

Approved __X__ Rejected ____

On 1/14/2015

By Samir Goel

Amendment Request #1

To : The Texas Transportation Commission
c/o District Engineer
Texas Department of Transportation
Houston District, Texas

Date	1/14/2015
Application No.	HOU20141028081022
District App. No.	14-2783
Highway	UA 0090
Maintenance Section	South Harris
County	Harris

We request to amend the proposed utility facility installation as described below:

Changed Item(s)	Old	Revised
Description	We are working on the engineering design on the above referenced project for the City of Houston. The following works will be done within TxDOT right-of-way: ¿ 24-inch water line in a tunnel about 25 feet deep to cross US Highway 90A (S Main Street) (refer to sheets 22 and 23 of 79 of the set). ¿ 12-inch water line will connect to existing 12-inch water line around Station 33+05 on the north of W Bellfort (refer to sheets 22 and 23 of 79 of the set) These works will require Traffic Control Plan (TCP). I have attached a set of drawings that includes the cover, layout, applicable P&P sheets, and applicable TCP sheet. Your review and comments/approval on the works involved is highly appreciated.	We are working on the engineering design on the above referenced project for the City of Houston. The following works will be done within TxDOT right-of-way: ¿ 24-inch water line in a tunnel about 29 feet deep to cross US Highway 90A (S Main Street) (refer to sheets 22 and 23 of 79 of the set). ¿ 12-inch water line will connect to existing 12-inch water line around Station 32+98 on the north side of W Bellfort (refer to sheets 22 and 23 of 79 of the set) These works will require Traffic Control Plan (TCP). I have attached a set of drawings that includes the cover, layout, applicable P&P sheets, and applicable TCP sheet. Your review and comments/approval on the works involved is highly appreciated.
Attachment file(s)	W Bellfort-24 WL-60% Design.pdf (4116.38 KB)	Amended W Bellfort-24 WL-60% Design.pdf (4034.27 KB)

All other requirements and provisions remain the same. If this amendment is approved, a copy will be kept at the job site at all times, along with the Notice of Proposed Installation and corresponding approval.

Utility Installation Owner	CITY OF HOUSTON.
By	Kiran Punyamanthula
Title	
Address	10700 Richmond Avenue Ste # 113
	Houston, TX 77042
Phone No.	713-975-8769
E-mail address	kiran.p@kuoassociates.com

Installation Application
Online version 4/2006

Notice of Proposed Installation
Utility Line On TxDOT Highway Right of Way

To the Texas Transportation Commission
c/o District Engineer
Texas Department of Transportation
Houston District, Texas

Date 10/28/2014
Application No. HOU20141028081022

Formal notice is hereby given that City of Houston Public Works Department
proposes to install a utility facility within the right-of-way of UA0090
in Harris County, Texas as follows: (details are shown on page 2)

We are working on the engineering design on the above referenced project for the City of Houston. The following works will be done within TxDOT right-of-way: ¿ 24-inch water line in a tunnel about 25 feet deep to cross US Highway 90A (S Main Street) (refer to sheets 22 and 23 of 79 of the set). ¿ 12-inch water line will connect to existing 12-inch water line around Station 33+05 on the north of W Bellfort (refer to sheets 22 and 23 of 79 of the set) These works will require Traffic Control Plan (TCP). I have attached a set of drawings that includes the cover, layout, applicable P&P sheets, and applicable TCP sheet. Your review and comments/approval on the works involved is highly appreciated.

The line will be constructed and maintained on the highway right-of-way as shown on the attached drawing and in accordance with the rules, regulations and policies of the Texas Department of Transportation (TxDOT), and all governing laws, including but not limited to the "Federal Clean Water Act," the "National Endangered Species Act," and the "Federal Historic Preservation Act." Upon request by TxDOT, proof of compliance with all governing laws, rules and regulations will be submitted to TxDOT before commencement of construction.

Our firm will use Best Management Practices to minimize erosion and sedimentation resulting from the proposed installation, and we will revegetate the project area as indicated under "Revegetation Special Provisions."

Our firm will ensure that traffic control measures complying with applicable portions of the Texas Manual of Uniform Traffic Control Devices will be installed and maintained for the duration of this installation.

The location and description of the proposed installation and appurtenances is more fully shown by 1 files containing drawings and other pertinent information uploaded to the website.

Construction will begin on or after May 15, 2015 and end on or before February 28, 2016.

I certify that I am authorized to represent the Firm listed below, and that our Firm agrees to the conditions/provisions included in this notice.

Utility Installation Owner City of Houston Public Works Department
By Kiran Punyamanthula
Title
Address 10700 Richmond Avenue Ste # 113
Houston, TX 77042
Phone No. 713-975-8769
E-mail address kiran.p@kuoassociates.com

Application Details

Application No.	HOU20141028081022
Date	10/28/2014
Utility Installation Owner	City of Houston Public Works Department
By	Kiran Punyamanthula
TxDOT District	Houston District
County	Harris
Route	UA0090
Control Section	002709
Description	We are working on the engineering design on the above referenced project for the City of Houston. The following works will be done within TxDOT right-of-way: ¿ 24-inch water line in a tunnel about 25 feet deep to cross US Highway 90A (S Main Street) (refer to sheets 22 and 23 of 79 of the set). ¿ 12-inch water line will connect to existing 12-inch water line around Station 33+05 on the north of W Bellfort (refer to sheets 22 and 23 of 79 of the set) These works will require Traffic Control Plan (TCP). I have attached a set of drawings that includes the cover, layout, applicable P&P sheets, and applicable TCP sheet. Your review and comments/approval on the works involved is highly appreciated.
Attachments	W Bellfort-24 WL-60% Design.pdf

TxDOT - Houston District

CHECKLIST FOR REVIEW OF NOTICES OF PROPOSED INSTALLATION

Online version 04/2008

Yes	No	N/A	
☒	☐	☐	Are the utility plans legible, drawn to scale, and accurately dimensiones?
☒	☐	☐	Is the location of the proposed utility line clearly shown on the plans?
☒	☐	☐	Is the profile of the bore shown on drawings?
☒	☐	☐	Is the right of way line clearly shown and the distance of the utility line from the edge of pavement shown on the plans?
☐	☒	☐	For aerial installations, do the plans clearly show and differentiate between existing poles and new poles?
☒	☐	☐	Are other existing utility lines shown on the plans? Including vertical elevations and horizontal alignments.
☒	☐	☐	It is understood that it responsibility of the utility owner to contact TxDOT 48 hrs prior to the start of construction using the UIR System. It is also the owners to responsibility to contact TxDOT once the construction is complete.
☒	☐	☐	It is understood that a copy of the permit MUST be on the job site during any construction.

Board of Directors

Gilbert Andrew Garcia, CFA
Chairman

Allen D. Watson
Vice Chairman

Lisa Castañeda
Secretary

Burt Ballanfant

Honorable Dwight Jefferson

Diann L. Lewter

Jim Robinson

Cindy Siegel

Christof Spieler

President & Chief Executive Officer

Thomas C. Lambert

December 8, 2014

Kutubul A. M. Mainuddin, PE, RPLS
KUO & Associates, Inc.
Consulting Engineers & Surveyors
10700 Richmond Avenue, Suite 113
Houston, TX 77042

DCN: 14.CP.ML00002
FBS: 75.260.15
Response Required: No

Reference: Contract No.
KUO & Associates, Inc. Letter Dated November 11, 2014

Subject: Letter of No Objection -- 24-Inch Water Line along West Belfort from Stella Link Rd. to Buffalo Speedway

Dear Mr. Sangam:

METRO is pleased to receive your submittal "24-inch Water Line along West Belfort from Stella Link Rd to Buffalo Speedway" for review. Based on our review of these plans, we offer **No Objection** to your proposed construction as long as the construction work is coordinated with our Operations department. The contact information is Carl Taylor, Carl.Taylor@ridemetro.org 713-615-7219 or Shirley Mitchell, Shirley.Mitchell@Ridemetro.org 713-615-7212. METRO is also requesting that you update your "General Construction Notes". Please see attached comment form for specific language.

Our review was restricted to the information provided. If there are changes that materially changed the scope of the work, this objection becomes invalid.

If you have any questions or need additional information, please contact Jose Castellanos at 713-739-3727 or by email jcastellanos@ridemetro.org

Sincerely,

J Castellanos, PE

Jose Castellanos, P.E.
Director, Program Management Support
Engineering & Construction

Encl: 24-inch Water Line on W Bellfort from Stella Link to Buffalo Speedway-Reviewer Comment Form (3).doc

Section 01145

USE OF PREMISES

1.01 SECTION INCLUDES

A. General use of the site including properties inside and outside of rights-of-way, work affecting road, ramps, streets and driveways and notification to adjacent occupants.

1.02 RIGHTS-OF-WAY

A. Confine access, and operations and storage areas to rights-of-way provided by the City as stipulated in Document 00700 - General Conditions; trespassing on abutting lands or other lands in the area is not allowed.

B. Make arrangements, at no cost to the City, for temporary use of private properties. Contractor and Surety shall indemnify and hold harmless the City against claims or demands arising from such use of properties outside of rights-of-way. Submit a copy of agreements between private property owners and Contractor prior to use of the area. Agreements between private property owners and Contractor shall be notarized or bear the signatures of two witnesses.

C. Obtain written permission from City of Houston Parks and Recreation Department for storage of materials on esplanades and other areas within rights-of-way under that department's jurisdiction. Submit copies of written permission prior to use of the area.

D. Restrict total length of distributed materials along the route of construction to 1,000 linear feet unless otherwise approved in writing by City Engineer.

1.03 PROPERTIES OUTSIDE OF RIGHTS-OF-WAY

A. Do not alter the condition of properties adjacent to and along rights-of-way.

B. Do not use ways, means, methods, techniques, sequences, or procedures that result in damage to properties or improvements.

C. Restore damaged properties outside of rights-of-ways at no cost to the city

1.04 USE OF SITE

A. Obtain approvals from governing authorities prior to impeding or closing public roads and streets. Do not close more than two consecutive intersections at one time.

B. Notify Project Manager and Public Works and Engineering Traffic Management Branch at least five working days prior to closing a street or street crossing. Obtain permits for street closures in advance.

C. Maintain 10-foot-wide minimum access lanes for emergency vehicles including access to fire hydrants.

D. Avoid obstructing drainage ditches or inlets. When obstruction is unavoidable due to requirements of the Work, provide grading and temporary drainage structures to maintain unimpeded flow.

E. Locate and protect private lawn sprinkler systems that may exist within the site. Repair or replace damaged systems to condition existing at start of the Work, or better. Test irrigation system prior to construction.

F. Conform to daily clean-up requirements of Article 3 of Document 00700 - General Conditions.

G. Beware of overhead power lines existing in area and in close proximity of the Project. When 10 feet of clearance between energized overhead power line and construction-related activity cannot be maintained, request Center Point Energy (CPE) de-energize or move conflicting overhead power line. Contact CPE representatives at (713) 207-2222. Schedule, coordinate and pay costs associated with de-energizing or moving conflicting overhead power lines. When there is no separate pay item for this effort, include these costs in various items of bid that make such work necessary.

1.05 NOTIFICATION TO ADJACENT OCCUPANTS

A. Notify individual occupants in areas to be effected by the Work of proposed construction and time schedule. Notify not less than 72 hours or more than two weeks prior to work performed within 200 feet of homes or businesses. Follow form and content of sample door hanger provided by Project Manager.

B. Include in notification nature of the Work, and names and telephone numbers of two company representatives for resident contact available on 24-hour call.

C. Submit proposed notification to Project Manager for approval. Consider ethnicity of the neighborhood where English is not the dominant language. Provide notice in an understandable language.

1.06 PUBLIC, TEMPORARY, AND CONSTRUCTION ROADS AND RAMPS

A. Construct and maintain temporary detours, ramps, and roads to provide for normal public traffic flow when it is necessary to close public roads or streets.

B. Provide mats or other means to prevent overloading or damage to existing roadways from tracked equipment, large tandem axle trucks or equipment that will damage the existing roadway surfaces.

C. Construct and maintain access roads and parking areas as specified in Section 01504 - Temporary Facilities and Controls.

1.07 EXCAVATION IN STREETS AND DRIVEWAYS

A. Avoid hindering or inconveniencing public travel on streets or intersecting alleys for more than two blocks at any one time, except by permission of City Engineer.

B. Obtain Traffic Management Branch and City Engineer's approval when nature of the Work requires closure of an entire street. Permits required for street closure are Contractor's responsibility. Avoid unnecessary inconvenience to abutting property owners.

C. Remove surplus materials and debris and open each block for public use, as work in that block is complete.

D. Acceptance of any portion of the Work will not be based on return of street to public use.

E. Avoid obstructing driveways or entrances to private property.

F. Provide temporary crossings or complete excavation and backfill in one continuous operation to minimize duration of obstruction when excavation is required across drives or entrances.

G. Provide barricades and signs in accordance with Section VI of the State of Texas Manual on Uniform Traffic Control Devices.

1.08 TRAFFIC CONTROL

A. Comply with traffic regulation as specified in Section 01555 - Traffic Control and Regulation.

1.09 SURFACE RESTORATION

A. Restore the site including landscaping to the condition existing before construction, or better.

B. Repair paved areas per the requirements of Section 02951 - Pavement Repair and restoration.

C. Repair damaged turf areas, level with bank run sand conforming to Section 02317 - Excavation and Backfill for Utilities, or topsoil conforming to Section 02911 - Topsoil, and re-sod in accordance with Section 02922 - Sodding. Water and level newly sodded areas with adjoining turf using appropriate steel wheel rollers for sodding. Do not use spot sodding or sprigging.

1.10 LIMITS OF CONSTRUCTION

A. Confine operations to lands within construction work limits shown on Drawings. Unless otherwise noted on Drawings adhere to the following:

1. Where utility alignment is within esplanade, and construction limits are shown on Drawings to extend to edge of esplanade, keep equipment, materials, stockpiles a minimum of five feet from back of curb.

2. Where construction limits shown on Drawings extend to property line, keep sidewalks free of equipment, materials, and stockpiles.

1.11 EQUIPMENT AND MATERIAL SALVAGE

A. Upon completion of the Work, carefully remove salvageable equipment and material. Deliver them to City of Houston as directed by Project Manager. Dispose of equipment offsite at no additional cost to the City when Project Manager deems equipment unfit for further use.

PART 2 P R O D U C T S - Not Used

PART 3 E X E C U T I O N - Not Used

END OF SECTION

Section 01255

CHANGE ORDER PROCEDURES

PART 1 G E N E R A L

1.01 SECTION INCLUDES

A. Procedures for processing Change Orders, including:

1. Assignment of a responsible individual for approval and communication of changes in the Work;

2. Documentation of change in Contract Price and Contract Time;

3. Change procedures, using proposals and Modifications;

4. Execution of Change Orders;

5. Correlation of Contractor submittals.

1.02 REFERENCES

A. Blue Book is defined as the Rental Rate Blue Book for Construction Equipment (a.k.a. Data Quest Blue Book).

B. Rental Rate is defined as the full-unadjusted base rental rate for the appropriate item of construction equipment.

1.03 RESPONSIBLE INDIVIDUAL

A. Provide a letter indicating the name and address of the individual authorized to execute Modifications, and who will be responsible for informing others in Contractor's employ and Subcontractors of changes to the Work. Provide this information at the pre-construction meeting.

1.04 DOCUMENTATION OF CHANGE IN CONTRACT PRICE AND CONTRACT TIME

A. Maintain detailed records of changes in the Work. Provide full information required for identification and evaluation of proposed changes, and substantiate costs of changes in the Work.

B. Document each proposal for change in Contract Price or Contract Time with sufficient data to allow evaluation of proposal.

C. Include the following minimum information on proposals:

1. Quantities of items in original Document 00410 – Bid Form with additions, reductions, deletions, and substitutions.

2. Quantities and cost of items in original Schedule of Values with additions, reductions, deletions and substitutions.

3. Provide Unit Prices for new items, with supporting information, for inclusion in Schedule of Unit Price Work.

4. Justification for changes in Contract Time.

5. Additional data upon request.

D. For changes in the Work performed on a time-and-material basis, provide the following additional information:

1. Quantities and description of Products.

2. Taxes, insurance and Bonds.

3. Overhead and profit as noted in Document 00700 - General Conditions.

4. Dates, times and by who work was performed.

5. Time records and certified copies of applicable payrolls.

6. Invoices and receipts for Products, rental equipment, and subcontracts, similarly documented.

E. For changes in the Work performed on a time-and-materials basis, rental equipment is paid as follows:

1. Actual invoice cost for duration of time required to complete extra work without markup for overhead and profit. When extra work comprises only a portion of a rental invoice where equipment would otherwise be on site, compute hourly equipment rate by dividing the actual monthly invoice by 176. One day equals eight hours and one week equals 40 hours.

2. Do not exceed estimated operating costs given in Blue Book for items of equipment. Overhead and profit will be allowed on the operating cost.

F. For changes in the Work performed on a time-and-materials basis using Contractor-owned equipment, use Blue Book rates as follows:

1. Contractor-owned equipment will be paid at the Blue Book Rental Rate for the duration of time required to complete extra work without markup for overhead and profit. Utilize lowest cost combination of hourly, daily, weekly or monthly rates. Use 150 percent of Rental Rate for double shifts, one extra shift per day, and 200 percent of Rental Rate for more than two shifts per day. Standby rates shall be 50 percent of the appropriate Rental Rate shown in Blue Book. No other rate adjustments apply.

2. Do not exceed estimated operating costs given in Blue Book. Overhead and profit will be allowed on operating costs. Operating costs will not be allowed for equipment on standby.

1.05 CHANGE PROCEDURES

A. Changes to Contract Price or Contract Time can only be made by issuance of Document 00941 - Change Order. Issuance of Document 00940 - Work Change Directive will be formalized into a Change Order. Changes will be in accordance with requirements of Document 00700 - General Conditions.

B. City Engineer will advise of Minor Changes in the Work as authorized by the Document 00700 - General Conditions by issuing Document 00942 – Minor Change.

C. Request clarification of Drawings, Specifications, Contract documents or other information by using Document 00931- Request for Information. Response by Project Manager to Requests for Information does not authorize Contractor to perform tasks outside scope of the Work. Changes must be authorized as described in this Section.

1.06 PROPOSALS AND CONTRACT MODIFICATIONS

A. Project Manager may issue Document 00932- Request for Proposal, which includes a detailed description of the proposed change with supplementary or revised Drawings and Specifications. Project Manager may also request a proposal in response to a Request for Information. Prepare and submit the proposal within seven days or as specified in request.

B. Submit requests for Contract changes to City Engineer describing proposed change and its full effect on the Work, with a statement describing reason for change and effect on Contract Price and Contract Time including full documentation.

C. Design Consultant may review Change Orders.

1.07 WORK CHANGE DIRECTIVE

A. City Engineer may issue a signed Work Change Directive instructing Contractor to proceed with a change in the Work. Work Change Directive will subsequently be incorporated into a Change Order.

B. Work Change Directives will describe changes in the Work and designate the method of determining change in Contract Price or Contract Time.

C. Proceed promptly to execute changes in the Work in accordance with the Work Change Directive.

1.08 STIPULATED PRICE CHANGE ORDER

A. A Stipulated Price Change Order will be based on an accepted proposal.

1.09 UNIT PRICE CHANGE ORDER

A. Where Unit Prices for affected items of the Work are included in Document 00410 – Bid Form, the Change Order will be based on Unit Prices, subject to Articles 7 and 9 of Document 00700 - General Conditions.

B. Where Unit Prices of the Work are not pre-determined in Document 00410-Bid Form, the Work Change Directive or accepted proposal will specify the Unit Prices to be used.

1.10 TIME-AND-MATERIAL CHANGE ORDER

A. Provide itemized account and supporting data after completion of change, within time limits indicated for claims in Document 00700 - General Conditions.

B. City Engineer will determine the change allowable in Contract Price and Contract Time as provided in Document 00700 - General Conditions.

C. Maintain detailed records for work done on time-and-material basis as specified in Paragraph 1.04 above.

D. Provide full information required for evaluation of changes and substantiate costs for changes in the Work.

1.11 EXECUTION OF CHANGE DOCUMENTATION

A. City Engineer will issue Change Orders, Work Change Directives, or Minor Change in the Work for signatures of Parties as described in Document 00700 - General Conditions.

1.12 CORRELATION OF CONTRACTOR SUBMITTALS

A. For Stipulated Price Contracts, promptly revise Schedule of Values and Application for Payment forms to record authorized Change Orders as separate line item.

B. For Unit Price Contracts, the next monthly estimate of the Work after acceptance of a Change Order will be revised to include new items not previously included with appropriate Unit Prices.

C. Promptly revise progress schedules to reflect change in Contract Time, and to adjust time for other items of work affected by the change, and resubmit for review.

D. Promptly enter changes to on-site and record copies of Drawings, Specifications or Contract documents as required in Section 01785 - Project Record Documents.

PART 2 P R O D U C T S - Not Used

PART 3 E X E C U T I O N - Not Used

END OF SECTION

Section 01270

MEASUREMENT AND PAYMENT

PART 1 G E N E R A L

1.01 SECTION INCLUDES

A. Procedures for measurement and payment plus conditions for nonconformance assessment and nonpayment for rejected Products.

1.02 AUTHORITY

A. Measurement methods delineated in Specification sections are intended to complement criteria of this Section. In event of conflict, requirements of the Specification section shall govern.

B. Project Manager will take all measurements and compute quantities accordingly.

C. Assist by providing necessary equipment, workers, and survey personnel.

D. Measurement and Payment paragraphs are included only in those Specification sections of Division 01 where direct payment will be made. Include costs in the total bid price for those Specification sections in Division 01 that do not contain Measurement and Payment paragraphs,

1.03 UNIT QUANTITIES SPECIFIED

A. Quantity and measurement estimates stated in the Agreement are for contract purposes only. Quantities and measurements supplied or placed in the Work and verified by Project Manager will determine payment as stated in Article 9 of Document 00700 - General Conditions.

B. When actual work requires greater or lesser quantities than those quantities indicated in Document 00410 – Bid Form, provide required quantities at Unit Prices contracted, except as otherwise stated in Article 9 of Document 00700 - General Conditions.

1.04 MEASUREMENT OF QUANTITIES

A. Measurement by Weight: Reinforcing steel, rolled or formed steel or other metal shapes are measured by CRSI or AISC Manual of Steel Construction weights. Welded assemblies are measured by CRSI or AISC Manual of Steel Construction or scale weights.

B. Measurement by Volume:

1. Stockpiles: Measured by cubic dimension using mean length, width, and height or thickness.

2. Excavation and Embankment Materials: Measured by cubic dimension using average end area method.

C. Measurement by Area: Measured by square dimension using mean length and width or radius.

D. Linear Measurement: Measured by linear dimension, at item centerline or mean chord.

E. Stipulated Price Measurement: By unit designated in the Agreement.

F. Other: Items measured by weight, volume, area, or linear means or combination, as appropriate, as completed item or unit of the Work.

G. Measurement by Each: Measured by each instance or item provided.

H. Measurement by Lump Sum: Measure includes all associated work.

1.05 PAYMENT

A. Payment includes full compensation for all required supervision, labor, Products, tools, equipment, plant, transportation, services, and incidentals; and erection, application or Installation of an item of the Work; and Contractor's overhead and profit.

B. Total compensation for required Unit Price work shall be included in Unit Price bid in Document 00410 – Bid Form. Claims for payment as Unit Price work, but not specifically covered in the list of Unit Prices contained in Document 00410 – Bid Form, will not be accepted.

C. Interim payments for stored materials will be made only for materials to be incorporated under items covered in Unit Prices, unless disallowed in Document 00800 - Supplementary Conditions.

D. Progress payments will be based on Project Manager's observations and evaluations of quantities incorporated in the Work multiplied by Unit Price.

E. Final payment for work governed by Unit Prices will be made on the basis of actual measurements and quantities determined by Project Manager multiplied by the Unit Price for work which is incorporated in or made necessary by the Work.

1.06 NONCONFORMANCE ASSESSMENT

A. Remove and replace work, or portions of the Work, not conforming to the Contract documents.

B. When not practical to remove and replace work, City Engineer will direct one of the following remedies:

1. Nonconforming work will remain as is, but Unit Price will be adjusted lower at discretion of City Engineer.

2. Nonconforming work will be modified as authorized by City Engineer, and the Unit Price will be adjusted lower at the discretion of City Engineer, when modified work is deemed less suitable than specified.

C. Specification sections may modify the above remedies or may identify a specific formula or percentage price reduction.

D. Authority of City Engineer to assess nonconforming work and identify payment adjustment is final.

1.07 NONPAYMENT FOR REJECTED PRODUCTS

A. Payment will not be made for any of the following:

1. Products wasted or disposed of in an unacceptable manner.

2. Products determined as nonconforming before or after placement.

3. Products not completely unloaded from transporting vehicles.

4. Products placed beyond lines and levels of required work.

5. Products remaining on hand after completion of the Work, unless specified otherwise.

6. Loading, hauling, and disposing of rejected Products.

PART 2 P R O D U C T S - Not Used

PART 3 E X E C U T I O N - Not Used

END OF SECTION

Section 01292

SCHEDULE OF VALUES

PART 1 G E N E R A L

1.01 SECTION INCLUDES

A. Preparation and submittal of Schedule of Values for Stipulated Price Contracts or for Major Unit Price Work on Unit Price Contracts.

1.02 PREPARATION

A. For Stipulated Price Contracts, subdivide the Schedule of Values into logical portions of the Work, such as major work items or work in contiguous construction areas. Use Section 01325 - Construction Schedule as a guide to subdivision of work items. Directly correlate Items in the Schedule of Values with tasks in the Construction Schedule. Organize each portion using the Project Manual Table of Contents as an outline for listing value of the Work by Sections. A pro rata share of mobilization, Bonds, and insurance may be listed as separate items for each portion of the Work.

B. For Unit Price Contracts, items should include a proportional share of Contractor's overhead and profit so that total of all items will equal Contract Price.

C. For lump sum equipment items, where submittal of operation and maintenance data and testing are required, include separate items for equipment operation and maintenance data where:

1. submittal of maintenance data is valued at five percent of the lump sum amount for each equipment item and

2. submittal for testing and adjusting is valued at five percent of the lump sum amount for each equipment item.

Round off figures for each item listed to the nearest $100. Set the value of one item, when necessary, to make total of all values equal the Contract Price for Stipulated Price Contracts or the lump sum amount for Unit Price Work.

1.03 SUBMITTAL

A. Submit the Schedule of Values, in accordance with requirements of Section 01330 - Submittal Procedures, at least 10 days prior to processing of the first Certificate for Payment.

B Submit the Schedule of Values in an approved electronic spreadsheet file and an 81/2-inch by 11-inch print on white bond paper.

C. Revise Schedule of Values for items affected by Contract Modifications. After City Engineer has reviewed changes, resubmit at least 10 days prior to the next scheduled Certificate for Payment date.

PART 2 P R O D U C T S - Not Used

PART 3 E X E C U T I O N - Not Used

END OF SECTION

Section 01312

COORDINATION AND MEETINGS

PART 1 G E N E R A L

1.01 SECTION INCLUDES

A. General coordination including pre-construction meeting, site mobilization conference, and progress meetings.

1.02 COORDINATION OF DOCUMENTS

A. Coordination is required throughout documents. Refer to Contract documents and coordinate as necessary.

1.03 CONTRACTOR COORDINATION

A. Coordinate scheduling, submittals, and work of various Specification sections to assure efficient and orderly sequence of Installation of interdependent construction elements.

B. Coordinate completion and clean up of the Work prior to the Date of Substantial Completion and for portions of the Work designated for City's partial occupancy.

C. Coordinate access to the site for correction of nonconforming work to minimize disruption of the City's activities where the City is in partial occupancy.

1.04 PRE-CONSTRUCTION MEETING

A. Project Manager will schedule pre-construction meeting.

B. Attendance Required: City representatives, Design Consultant, special consultants as required by Project Manager, Contractor, and major Subcontractors and Suppliers.

C. Agenda:

1. Distribution of Contract documents.

2. Designation of personnel representing the Parties and Design Consultant.

3. Review of insurance.

4. Discussion of formats for Schedule of Values and Construction Schedule.

5. Procedures and processing of Shop Drawings, substitutions, pay estimates or Applications for Payment, Requests for Information, Requests for Proposal, Modifications, and the Contract closeout, other submittals.

6. Scheduling of the Work and coordination with other contractors.

7. Review of Subcontractors and Suppliers.

8. Appropriate agenda items listed for the site mobilization conference, Paragraph 1.05.C, when pre-construction meeting and site mobilization conference are combined.

9. Procedures for testing.

10. Procedures for maintaining record documents.

1.05 SITE MOBILIZATION CONFERENCE

A. When required by Contract documents, Project Manager will schedule a conference at the Project site prior to Contractor mobilization.

B. Attendance Required: City representatives, Design Consultant, special consultants, Superintendent, and major Subcontractors.

C. Agenda:

1. Use of premises by the City and Contractor.

2. Safety and first aid procedures.

3. Construction controls provided by the City.

4. Temporary utilities.

5. Survey and layout.

6. Security and housekeeping procedures.

7. Field office requirements.

1.06 PROGRESS MEETINGS

A. Hold meetings at Project field office or other location designated by Project Manager. Hold meetings at monthly intervals, or more frequently when directed by Project Manager.

B. Attendance Required: Superintendent, major Subcontractors and Suppliers, City representatives, Design Consultant and its subconsultants as appropriate for agenda topics for each meeting.

C. Project Manager will make arrangements for meetings, and for recording minutes.

D. Project Manager will prepare the agenda and preside at meetings.

E. Provide required information and be prepared to discuss each agenda item.

F. Agenda:

1. Review minutes of previous meetings.

2. Review of construction schedule, pay estimates, cash flow curve, payroll and compliance submittals.

3. Field observations, problems, and necessary decisions.

4. Identification of problems that impede planned progress.

5. Review of submittal schedule and status of submittals.

6. Review of RFI and RFP status.

7. Modification status.

8. Review of off-site fabrication and delivery schedules.

9. Maintenance of Construction Schedule.

10. Corrective measures to regain Construction Schedule.

11. Planned progress during the succeeding work period.

12. Coordination of projected progress.

13. Maintenance of quality and work standards.

14. Effect of proposed Modifications on Construction Schedule and coordination.

15. Review Project Record Contract Drawings.

16. Other item relating to the Work.

PART 2 P R O D U C T S - Not Used

PART 3 E X E C U T I O N - Not Used

END OF SECTION

Section 01321

CONSTRUCTION PHOTOGRAPHS

PART 1 G E N E R A L

1.01 SECTION INCLUDES

A. Photographic requirements for construction photographs and submittals.

1.02 DEFINITIONS

A. Pre-construction Photographs: Photographs taken, in sufficient numbers and detail, prior to Date of Commencement of the Work, to show original construction site conditions.

B. Progress Photographs: Photographs, taken throughout the duration of construction at regular intervals and from fixed vantage points, pre-approved by the City, that document progress of the Work.

C. Finished Photographs: Photographs, taken by a professional photographer near Date of Substantial Completion and before City Council's acceptance of the Work, that are suitable for framing and for use in brochures or on the Internet

1.03 SUBMITTALS

A. Refer to Section 01330, Submittal Procedures, for submittal requirements.

B. Format and Media. Film or digital photography may be used. Submit color photographs, unless otherwise specified.

1. Prints. Submit each Progress or Pre-construction Photograph print in a three-hole plastic pocket or sleeve, bound in a three-ring notebook. Produce prints on photographic-quality paper approved by Project Manager. Minimum size for Pre-construction Photograph prints shall be 3-inches by 5-inches. Progress Photograph prints shall be 8-inches by 10-inches.

2. Film. Use 35mm or larger color film. Submit negatives used to make submitted photographs, in 3-hole 8-1/2 inch by 11-inch plastic sheets with sleeves for negatives.

3. Digital Photography. Use 2.1 megapixel density or greater for photographs. Scanned photographs must equal or exceed 400 dots

per inch when scanned from 8-inch by 10-inch prints. Submit digital photographic files on computer disks. Format disks for MS-DOS (Microsoft Disk Operating System) filing system and in JPEG (Joint Photographic Experts Group) format.

C. Submittal Quantities and Frequencies.

1. Pre-construction Photographs:
   a. For Stipulated Price Contracts, submit two sets of Pre-construction Photographs, if required, prior to first Application for Payment.
   b. For Unit Price Contracts, submit two sets of Pre-construction Photographs prior to start of construction operations.

2. Progress Photographs:
   a. For Stipulated Price Contracts, submit three sets of Progress Photographs with each Application for Payment at the times established for submittal of Applications for Payment. Monthly Applications for Payment shall be deemed incomplete if not accompanied by the required Progress Photographs. Contractor's failure or election to not submit a monthly Application for Payment shall not affect the requirement for monthly Progress Photographs.
   b. Progress Photographs are not required for Unit Price Contracts unless otherwise specified.

3. Finished Photographs: For Stipulated Price Contracts submit two sets of Finished Photographs, if required, after Date of Substantial Completion and prior to final payment. Each set shall contain one 11-inch by 14-inch matte finish color photographic print from each of the two vantage points pre-approved by the City. Vantage points for Finished Photographs will be approved separately from vantage points approved for Progress Photographs. Finished Photographs are not required for Unit Price Contracts unless otherwise specified.

D. Labeling. Place a label on the back of each photographic print, applied so as to not to show through on the front. Labels shall contain the following information:

1. Name of Project, address of Project and GFS Number.

2. Name and address of Contractor.

3. Date photograph was taken.

4. Location photo was taken from and short description of photo subject.

5. Name and address of professional photographer who took the photograph, if applicable.

E. Hand-deliver or transmit prints in standard photographic mailers marked "Photographs - Do Not Bend".

F. Photographic prints, negatives, photographic files and disks become the property of the City. Do not be publish photographs without written consent by the City.

1.04 QUALITY ASSURANCE

A. Contractor shall be responsible for the quality of and timely execution and submittal of photographs.

B. For Finished Photographs, Contractor shall use a professional photographer, with five years minimum professional experience in the Houston area. Contractor shall submit name, address and credentials of professional photographer for Project Manager's review and approval.

PART 2 PRODUCTS - Not Used

PART 3 EXECUTION

3.01 PRE-CONSTRUCTION PHOTOGRAPHS

A. Prior to commencement of construction operations, photograph the site to include initial construction corridor, detour routes, and staging or storage areas.

1. For Stipulated Price Contracts, unless specified as a requirement in other Sections, these photographs are optional for Contractor, but are highly recommended for areas bounded by other property owners.

2. Pre-construction photographs are required for Unit Price Contracts. For line projects with scheduled construction segments, take Pre-construction Photographs prior to commencement of work on each segment.

B. Prepare Pre-construction Photographs as follows:

1. Show the following information on a non-reflective chalkboard placed within the picture frame:
   a. Job number.
   b. Project Number.
   c. Date and time photographs were taken (Automatic date/time in negative is acceptable).
   d. Baseline station, direction of view (i.e. N, S, NW, etc.) and house number or street address and street name.

2. Pre-construction Photographs shall indicate condition of the following:
   a. Esplanades and boulevards.
   b. Yards (near side and far side of street).
   c. House walks and sidewalks.
   d. Curbs.
   e. Areas between walks and curbs.
   f. Particular features (e.g. yard lights, shrubs, fences, trees).

3. Show date photographs were taken on negatives.

C. Show the location of vantage points and direction of shots on a key plan of the site.

3.02 PROGRESS PHOTOGRAPHS

A. Progress Photographs document monthly advancement of the Work. Select vantage points for each shot so as to best show status of construction and progress since last photograph submittal. Select camera stations that will require little or no movement or adjustment over the duration of construction.

B. Take monthly Progress Photographs at regular intervals to coincide with cutoff dates associated with each Application for Payment.

3.03 FINISHED PHOTOGRAPHS

A. Finished Photographs shall be “staged” and taken by a professional photographer to depict the most flattering images of a finished facility. Two vantage points, from which Finished Photographs will be taken, shall be agreed to in advance by the City. Photographer shall consider lighting, time of day, height of eye, landscaping and placement of vehicles, people and other props in each picture. Filters and post-photography processing may be utilized to achieve a finished product acceptable to the City.

3.04 LOCATION

A. Vantage points, times and conditions for camera stations and photography for Progress and Finished Photographs shall be mutually agreed upon by the City, Contractor and Photographer. Progress Photograph vantage points may be changed by mutual agreement as the Work progresses, at no additional cost to the City.

END OF SECTION

Section 01325

CONSTRUCTION SCHEDULE

PART 1 G E N E R A L

1.01 GENERAL

A. Provide Construction Schedules for the Work included in this Contract in accordance with requirements in this Section. Create Construction Schedule using Critical Path Method (CPM) computer software capable of mathematical analysis of Precedence Diagramming Method (PDM) plan. Provide printed activity listings and bar charts in formats described in this Section.

B. Combine activity listings and bar charts with narrative report to form Construction Schedule submittal for Project Manager.

1.02 SCHEDULING STAFF

A. Employ or retain services of individual experienced in CPM scheduling for duration of the Contract. Individual shall cooperate with Project Manager and update schedule monthly as required to indicate current status of the Work.

1.03 SUBMITTALS

A. Conform to requirements of Section 01330 - Submittal Procedures.

B. During preconstruction meeting, as described in Section 01312 - Coordination and Meetings, provide sample bar charts and activity listings produced from scheduling software proposed. Scheduling software is subject to review by Project Manager and must meet requirements provided in this Section. Project Manager will provide review of samples within seven days of submittal.

C. Within 21 days of receipt of approval of Contractor's format, or 30 days of Notice to Proceed, whichever is later, submit proposed Construction Schedule for review. Base Construction Schedule submittal on the following:

1. Level of detail and number of activities required in schedule are dependent on project type.
   a. For wastewater projects, categorize work type and area code in schedule.
      1) For wastewater rehabilitation projects, there are six work-type categories. An area code will be assigned for each

Meter Service Area or Basin. Include at least one activity for each unique combination of work type and area code. Normal schedules of wastewater rehabilitation projects contain between 35 and 100 activities, depending on number of basins and work types involved in each basin.

2) For wastewater relief projects (line work), area codes will be assigned geographically.

3) For wastewater plant or facility work, other criteria may apply to assignment of area codes, such as a combination of geographical and craft categories.

b. For projects with multiple types of tasks within scope, indicate types of work separately within schedule.

c. For projects with work at different physical locations or service areas, or different facilities within a site, indicate each location or facility separately within schedule. Show work on each floor of multi-story building as separate tasks.

d. For projects with multiple crafts or significant Subcontractor components, indicate elements separately within schedule. Unless permitted by Project Manager, tasks shall consist of work covered by only one division of Project Manual.

2. Unless permitted by Project Manager, each scheduled task shall be same as Schedule of Values line item, and vice versa.

3. For projects with Major Unit Price Work, indicate Shop Drawing submittal and review, purchase, delivery, and Installation dates on Project schedule. Include activities for testing, adjustment, and delivering O&M manuals.

4. No task except the acquisition of Major Unit Price Work shall represent more than one percent of Original Contract Price for facility projects and three percent of Original Contract Price for other projects. Duration of tasks may not exceed 40 calendar days.

5. For projects where operating facilities are involved, identify each period of work that will impact any process or operation in the schedule and that must be agreed to by Project Manager and facility operator prior to starting work in the area.

D. Construction Schedule submittals shall include:

1. printed bar charts that meet criteria outlined in this Section and are produced by Contractor's approved scheduling software;

2. activity listings that meet criteria outlined in this Section and are produced by Contractor's approved scheduling software; and

3. a predecessor/successor listing sorted by Activity ID that meets criteria outlined in this Section and is produced by Contractor's scheduling software.

4. A logic network diagram is required with the first Construction Schedule submittal for facilities projects.

5. Prepare and submit graphic or tabular display of estimated monthly billings (i.e. a cash flow curve for the Work) with the first schedule submittal. This information is not required in monthly updates, unless significant changes in work require re-submittal of schedule for review. Display shall allocate units indicated in bid schedule or Schedule of Values to Construction Schedule activities. Weighted allocations are acceptable, where appropriate. Dollar value associated with each allocated unit will be spread across the duration of that activity on a monthly basis. Total for each month and cumulative total will be indicated. These monthly forecasts are only for Project Manager's planning purposes. Monthly payments for actual work completed will be made in accordance with Document 00700 - General Conditions.

6. Narrative Report that provides the information outlined in this Section.

E. No payment will be made until Project Manager approves Construction Schedule and billing forecast.

F. If Contractor desires to make changes in its method of operating and scheduling, after Project Manager has reviewed original schedule, notify Project Manager in writing, stating reasons for changes. When Project Manager considers these changes to be significant, Contractor may be required to revise and resubmit for review all or affected portion of Contractor's Construction Schedule to show effect on the Work.

G. Upon written request from Project Manager, revise and submit for review all or any part of Construction Schedule submittal to reflect changed conditions in the Work or deviations made from original schedule.

H. Updated Construction Schedule with actual start and actual finish dates, percent complete, and remaining duration of each activity shall be submitted monthly. Data date used in updating monthly Construction Schedule shall be the same date as used in monthly Payment Application. Monthly update of Construction Schedule is required for monthly Payment Application to be processed for payment.

1.04 SCHEDULING COMPUTER SOFTWARE REQUIREMENTS

A. Contractor's scheduling software shall be capable of creating bar charts and activity listings, which can be sorted by various fields (i.e. Activity ID, Early Start, Total Float, Area Code, Specification Section number, and Subcontractor). Use software capable of producing logic network diagram.

B. Use scheduling software capable of producing activity listings and bar charts with the following information for each activity in the schedule:

1. Activity ID

2. Activity Description

3. Estimated (Original) Duration

4. Remaining Duration

5. Actual Duration

6. Early Start Date

7. Late Start Date

8. Early Finish Date

9. Late Finish Date

10. Free Float

11. Total Float

12. Activity Codes (such as Area Code, Work Type, Specification Section, Subcontractor)

C. Use scheduling software capable of printing calendars using mathematical analysis of schedule, indicating standard workdays of week and scheduled holidays.

D. Use scheduling software capable of printing activity listing that indicates predecessors and successors, lag factors and lag relationships used in creating logic of the schedule.

E. Use scheduling software to provide monthly time in Bar Chart format and scale with 12-month scale not to exceed one page width. Bar charts may be

printed or plotted on 8-1/2 by 11-inch, 8-1/2 by 14-inch or 11 by 17-inch sheet sizes. Over-size plots are not acceptable.

1.05 NARRATIVE SCHEDULE REPORT

A. Narrative schedule report shall list activities started this month, activities completed this month, activities continued this month, activities scheduled to start or complete next month, problems encountered this month, and actions taken to solve these problems.

B. Narrative schedule report shall describe changes made to Construction Schedule logic (i.e. changes in predecessors and lags), activities added to schedule, activities deleted from schedule, any other changes made to the schedule other than addition of actual start dates and actual finish dates and changes of data date and remaining durations for re-calculation of mathematical analysis.

PART 2 P R O D U C T S - Not Used

PART 3 E X E C U T I O N - Not Used

END OF SECTION

Section 01326

CONSTRUCTION SCHEDULE (BAR CHART)

PART 1 G E N E R A L

1.01 SECTION INCLUDES

A. Provide an initial Construction Schedule as required by this section for the Work. Do not start construction until Project Manager reviews the schedule.

1.02 FORM AND CONTENT OF INITIAL CONSTRUCTION SCHEDULE

A. Bar Chart:

1. Show major construction activities such as pipe laying, by traffic control phases or other approved key areas; tunnel construction, pavement removal, pavement replacement, pressure testing, chlorination, clean up and punch list as separate activities on the schedule.

2. Show week duration for each activity.

3. Show separate activities for each Shop Drawing and Product Data submittal critical to timely completion. Show submittal dates and dates Project Manager needs to provide approved submittals.

4. Provide separate horizontal bar for each activity. List start and finish date for each activity at left side of diagram.

5. Horizontal Time Scale: Identify first work day of each week.

6. Scale and Spacing: Notes must be legible. Allow space for notations and future revisions.

7. Order of Listings: Order bar chart listings by phases or other approved groups of activities that are contiguous. List activities in chronological order within each phase or group.

B. Narrative Description:

1. Submit narrative descriptions of anticipated work sequences as indicated by the sequence of activities presented in the schedule.

2. Discuss any activity that affects the public (such as phases of traffic control), interaction with specific forces of the City (such as valve operation, chlorination and testing) or other associated contractors.

1.03 PROGRESS REVISIONS

A. Submit progress revisions or necessary information to complete and process Payment Applications. When required, re-submittals for rejected revisions must be submitted and reviewed prior to the following month's processing of a Payment Application. The following month's Payment Application will not be processed until the re-submittal is reviewed and required progress revisions are received.

B. Provide a narrative report to describe:

1. Major changes in scope.

2. Revised projections in progress, completion, or changes in activity duration.

3. Other identifiable changes.

4. Problem areas, anticipated delays, and the impact on schedule.

5. Corrective action recommended and its effect.

6. Effect of changes on schedules or other contractors.

7. Product delivery lead times.

C. Include additional data with Bar Chart described in Paragraph 1.03A of this Section:

1. Show original dates for each activity in the approved initial progress schedule by narrow bar next to a wider bar for the current schedule.

2. Show date each activity actually started or finished when an event has occurred. Clearly identify actual dates in two right-most columns in left portion of an 11 by 17-inch chart.

3. Indicate the percentage progress to the date of submittal for each activity.

1.04 SUBMITTALS

A. Submit the initial progress schedule within 15 days after award of contract. Project Manager will review the schedule and return a reviewed copy within 21 days after receipt.

B. Cut-off dates for progress revisions may be as early as the 20th of the month to avoid delaying processing of Payment Applications. Use the cut-off date for the first approved revision for further revisions.

C. When required, re-submit within seven days after return of review copy.

D. Include connecting lines between bars in the schedule to indicate the sequence that activities will be accomplished. Connecting lines when the activity's start or finish is modified will identify impact of preceding or succeeding activities. Submit a minimum of six copies of the bar chart on 11 by 17-inch opaque reproductions. Project Manager will retain five copies and return the remaining copy.

PART 2 P R O D U C T S - Not Used

PART 3 E X E C U T I O N - Not Used

END OF SECTION

Section 01330

SUBMITTAL PROCEDURES

PART 1 G E N E R A L

1.01 SECTION INCLUDES

A. Submittal procedures for:

1. Schedule of Values
2. Construction Schedules and Cash Flow Curve (billing forecast).
3. Shop Drawings, Product Data and Samples
4. Operations and Maintenance (O&M) Data
5. Manufacturer's Certificates
6. Construction Photographs
7. Project Record Documents and monthly certification.
8. Video Tapes
9. Design Mixes

1.02 SUBMITTAL PROCEDURES

A. Scheduling and Handling:

1. Submit Shop Drawings, data and Samples for related components as required by Specifications and Project Manager.
2. Schedule submittals well in advance of need for construction Products. Allow time for delivery of Products after submittal approval.
3. Develop submittal schedule that allows sufficient time for initial review, correction, resubmission and final review of all submittals. Allow a minimum of 30 days for initial review. Project Manager will review and return submittals to Contractor as expeditiously as possible but time required for review will vary depending on complexity and quantity of data submitted.

4. Project Manager's review of submittals covers only general conformity to Drawings, Specifications and dimensions that affect layout. Contractor is responsible for quantity determination. No quantities will be verified by Project Manager. Contractor is responsible for errors, omissions or deviations from Contract requirements; review of submittals does not relieve Contractor from the obligation to furnish required items in accordance with Drawings and Specifications.

5. Submit five copies of documents unless otherwise specified.

6. Revise and resubmit submittals as required. Identify all changes made since previous submittal.

7. Assume risk for fabricated Products delivered prior to approval. Do not incorporate Products into the Work, or include payment for Products in periodic progress payments, until approved by Project Manager.

B. Transmittal Form and Numbering:

1. Transmit each submittal to Project Manager with Transmittal letter which includes:
   a. Date and submittal number
   b. Project title and number
   c. Names of Contractor, Subcontractor, Supplier and manufacturer
   d. Identification of Product being supplied
   e. Location of where Product is to be Installed
   f. Applicable Specification section number

2. Identify deviations from Contract documents clouding submittal drawings. Itemize and detail on separate 8-1/2 by 11-inch sheets entitled "DEVIATIONS FOR _____." When no deviations exist, submit a sheet stating no deviations exist.

3. Have design deviations signed and sealed by an appropriate design professional, registered in the State of Texas.

4. Sequentially number transmittal letters beginning with number one. Use original number for resubmittals with an alphabetic suffix (i.e., 2A for the first resubmittal of submittal 2, or 15C for third resubmittal of submittal 15, etc.). Show only one type of work or Product on each submittal. Mixed submittals will not be accepted.

C. Contractor's Stamp:

1. Apply Contractor's Stamp certifying that the items have been reviewed in detail by Contractor and that they comply with Contract requirements, except as noted by requested variances.

2. As a minimum, Contractor's Stamp shall include:
   a. Contractor's name
   b. Job number
   c. Submittal number
   d. Certification statement Contractor has reviewed submittal and it is in compliance with the Contract
   e. Signature line for Contractor

D. Submittals will be returned with one of the following Responses:

1. "ACKNOWLEDGE RECEIPT" when no response and resubmittal is required.

2. "NO EXCEPTION" when sufficient information has supplied to determine that item described is accepted and that no resubmittal is required.

3. "EXCEPTIONS AS NOTED" when sufficient information has been supplied to determine that item will be acceptable subject to changes, or exceptions, which will be clearly stated. When exceptions require additional changes, the changes must be submitted for approval. Resubmittal is not required when exceptions require no further changes.

4. "REJECTED-RESUBMIT" when submittal does not contain sufficient information, or when information provided does not meet Contract requirements. Additional data or details requested by Project Manager must be submitted to obtain approval.

1.03 MANUFACTURER'S CERTIFICATES

A. When required by Specification sections, submit manufacturers' certificate of compliance for review by Project Manager.

B. Place Contractor's Stamp on front of certification.

C. Submit supporting reference data, affidavits, and certifications as appropriate.

D. Product certificates may be recent or from previous test results, but must be acceptable to Project Manager.

1.04 DESIGN MIXES

A. When required by Specification sections, submit design mixes for review.

B. Place Contractor's Stamp, as specified in this section, on the front of each design mix.

C. Mark each mix to identify proportions, gradations, and additives for each class and type of mix submitted. Include applicable test results from samples for each mix. Perform tests and certifications within 12 months of the date of the submittal.

D. Maintain copies of approved mixes at mixing plant.

1.05 CHANGES TO CONTRACT

A. Changes to Contract may be initiated by completing a Request for Information form. Project Manager will provide a response to Contractor by completing the form and returning it to Contractor.

1. If Contractor agrees that the response will result in no increase in cost or time, a Minor Change in the Work will be issued by City Engineer.

2. If Contractor and Project Manager agree that an increase in time or cost is warranted, Project Manager will forward the Request for Proposal for negotiation of a Change Order.

PART 2 P R O D U C T S - Not Used

PART 3 E X E C U T I O N - Not Used

END OF SECTION

Section 01340

SHOP DRAWINGS, PRODUCT DATA, AND SAMPLES

PART 1 G E N E R A L

1.01 SECTION INCLUDES

A. Methods, schedules, and processes to be followed for Shop Drawings, Product Data and Sample submittals.

1.02 REQUIREMENT

A. Submit Shop Drawings, Product Data and Samples as required by Document 00700 - General Conditions and Specification sections, using procedures specified in Section 01330 - Submittal Procedures and the requirements of this Section.

B. Shop Drawings, Product Data and Samples are not considered Contract documents.

1.03 SHOP DRAWING/SUBMITTAL SCHEDULE

A. Submit a separate Shop Drawing submittal schedule at same time the Construction Schedule is submitted. List Products for which Shop Drawings and other submittals are required in the order that they appear in Specifications. Include Product Data and Sample submittals in the schedule. Payment Applications or Certificates for Payment will not be processed until Project Manager has approved the Shop Drawing submittal schedule.

1.04 SHOP DRAWINGS

A. Submit a minimum of seven sets of Shop Drawings and Product Data in a form and quality suitable for microfilming. Review and sign Shop Drawings indicating compliance with the Contract.

B. Place Contractor's Stamp on each drawing as described in Section 01330 - Submittal Procedures.

C. Show the following accurately and distinctly:

1. Field and erection dimensions;

2. Arrangement and section views;

3. Relation to adjacent materials or structure, including complete information for making connections between the Work and work under other contracts;

4. Types of Products and finishes;

5. Parts list and descriptions;

6. Assembly drawings of equipment components and accessories showing respective positions and relationships to the complete equipment package;

7. Identify details by referencing drawing sheet and detail numbers, schedule or room numbers as shown on the Contract drawings, where necessary for clarity.

D. Scale drawings to provide a true representation of the specific equipment or item Furnished.

E. Coordinate and submit components, necessary for Project Manager to adequately review submittal, as a complete package. Reproduction of the Drawings for use in Shop Drawings is not allowed.

F. For major changes to original documents, submit Computer-Aided Design (CAD) drawings on a media acceptable to Project Manager.

1.05 PRODUCT DATA

A. Submit Product Data for review as required in Specifications.

B. Place Contractor's stamp, on each data item submitted, as described in Section 01330 - Submittal Procedures.

C. Mark each copy to identify applicable Products, models, and options to be used in the Work. Where required by Specifications, supplement manufacturers' standard data to provide information unique to the Work.

D. Give manufacturers, trade name, model or catalog designation and applicable reference standard for Products specified only by reference standards.

E. Pre-approved and Pre-qualified Products.

1. For "pre-approved", "pre-qualified" and "approved" Products named in the City standard products list, provide an appropriate list designation,

as described in Section 01630 - Product Substitution Procedures, within 30 days after Notice to Proceed.

2. For Products proposed as alternates to "approved" products, provide information required to demonstrate that the proposed Products meet the level of quality and performance criteria of the "approved" product.

1.06 SAMPLES

A. Submit Samples for review as required by Specifications. Have Samples reviewed and signed by a Registered Professional.

B. Place Contractor's stamp on each Sample or firmly attach a sheet of paper with Contractor's stamp, as described in Section 01330 - Submittal Procedures.

C. Submit the number of Samples specified in Specifications; Project Manager will retain one.

D. Reviewed Samples that may be used in the Work are identified in Specifications.

PART 2 P R O D U C T S - Not Used

PART 3 E X E C U T I O N - Not Used

END OF SECTION

SECTION 01351

ENVIRONMENTAL SAFETY AND WORKER PROTECTION

PART 1 GENERAL

1.01 SECTION INCLUDES

Environmental Safety and Worker Protection including monitoring emissions and exposure to workers and providing an appropriate response. The role of the Certified Industrial Hygienist (CIH) is also defined.

1.02 MEASUREMENT AND PAYMENT

No separate measurement and payment for work performed under this Section. The Contractor shall include the cost for this work in the contract bid price for work of which this is a component part.

1.03 REFERENCES

The following is a list of applicable requirements to this project. It is not intended to be a complete listing of all laws and regulations to which the Contractor must comply.

A. Code of Federal Regulations

1. 29 CFR 1910, "Occupational Safety and Health Standards".

   a. 29 CFR 1910.146 "Permit-required confined spaces".

2. 29 CFR 1926, "Safety and Health Regulations for Construction" (Construction Industry Standards).

   a. 29 CFR 1926.33 "Access to Employee Exposure and Medical Records".

   b. 29 CFR 1926.51, "Sanitation Standard".

   c. 29 CFR 1926.59, "Hazard Communication".

   d. 29 CFR 1926.62, "Lead".

   e. 29 CFR 1926.103 "Respiratory Protection".

3. 40 CFR 50, "National Primary and Secondary Ambient Air Quality

Standards"

a. 40 CFR 50 Appendix B, "Reference Method for the Determination of Suspended Particulate Matter in the Atmosphere (High Volume Method)".

b. 40 CFR 50 Appendix G, "Reference Method for the Determination of Lead in Suspended Particulate Matter Collected from Ambient Air".

4. 40 CFR 58, "Ambient Air Quality Surveillance".

5. 40 CFR 60 Appendix A, "Visual Determination of Fugitive Emissions from Material Sources and Smoke Emissions from Fires".

6. 40 CFR 117, "Determination of Reportable Quantities for Hazardous Substances".

7. 40 CFR 122, "Administered Permit Program: The National Pollutant Discharge Elimination System".

B. National Institute for Occupational Health and Safety

NIOSH Method 7082, "Lead" (or equivalent).

C. American Society for Testing and Materials

ASTM D3335, "Test Method for Low Concentrations for Lead, Cadmium, and Cobalt in Paint by Atomic Absorption Spectroscopy."

D. EPA (Environmental Protection Agency) Publications

1. SW-846, "Test Methods for Evaluating Solid Waste - Physical/Chemical Methods".

2. EPA Method 3050, "Acid Digestion of Sediments, Sludges, and Soils".

E. SSPC Guide 6, "Guide for Containing Debris Generated During Paint Removal Operations".

F. SSPC Guide 7, "Guide for the Disposal of Lead Contaminated Surface Preparation Debris".

G. SSPC Publication 91-18, "Industrial Lead Paint Removal Handbook".

H. Texas Commission on Environmental Quality

1. Texas Administrative Code (TAC) 30, Chapter 101, "General Rules".

2. Texas Administrative Code (TAC) 30, Chapter 111, "Control of Air Pollution from Visible Emissions and Particulate Matter".

3. Texas Administrative Code (TAC) 30, Chapter 290, "Water Hygiene".

4. Texas Administrative Code (TAC) 30, Chapter 307, "Surface Water Quality Standards".

5. Texas Administrative Code (TAC) 30, Chapter 309, "Effluent Limitations".

6. Texas Administrative Code (TAC) 30, Chapter 335, "Industrial Solid Waste and Municipal Hazardous Waste".

1.04 SUBMITTALS

A. Submittals shall conform to requirements of Section 01330 – Submittal Procedures.

B. Submittals shall conform to appropriate codes for regulatory requirements.

1.05 DEFINITION

A. Acceptance Criteria: Minimum standards for the content of programs, plans, procedures, and designs required by this specification for the performance of this project. Acceptance criteria will be the basis for judging the responsiveness of Contractors' programs and will also be used as a basis for suspending work, if necessary.

B. Action Level: Employee exposure, without regard to the use of respirators, to an airborne concentration of lead of 30 micrograms per cubic meter of air (µg/m3) calculated as an eight hour time-weighted average (TWA).

C. CERCLA: Comprehensive Environmental Response, Compensation, and Liability Act; commonly called Superfund. Federal laws addressing the clean up of hazardous waste sites. Amended in 1986 by Superfund Amendments and Re-Authorization Act (SARA). EPA implementing regulations are contained in 40 CFR 300-373.

D. Competent Person: One who is capable of identifying existing and predictable lead hazards in the surroundings or working conditions and who has authorization to take prompt corrective measures to eliminate them.

E. Containment System: An enclosure built around lead paint removal areas designed to contain lead paint debris and prevent emissions to the environment.

F. Dust Collection: Mechanical ventilation system designed specifically for the containment, capture, and removal of airborne particulate from the containment. Dust collection systems shall include ductwork, plenums and/or hoppers, and dust collector(s) for the removal of leaded paint dust from the air stream prior to discharging to the atmosphere.

G. Emission: A release of material to the air, water, or ground.

H. Entry/Exit Airlock: An isolated enclosure located at the entrance of the containment in which the workers remove contaminated dust and debris from their work clothes.

I. EPA: The US. Environmental Protection Agency. Regulations are contained in Title 40 of the Code of Federal Regulations (40 CFR).

J. Hazardous Waste (lead paint debris): Waste that is classified as hazardous due to its concentrations of regulated hazardous substances. Paint debris is classified as hazardous waste if, after testing by the Toxicity Characteristic Leaching Procedure (TCLP), the leachate contains any of the 8 metals or other substances in concentrations at or above limits established in 40 CFR 261.

K. HEPA: A high efficiency particulate filter (HEPA) that is 99.97% efficient against particles of 0.3 microns in size or larger.

L. Lead Containing Dust and Debris: Dust and debris generated during the project which contains lead in any amount, including but not limited to pulverized paint, spent abrasive, filters (wet and dry), and containment materials upon which lead is still present.

M. NIOSH: National Institute of Occupational Safety and Health.

N. OSHA: Occupational Safety and Health Administration. Standards are contained in Title 29 of the Code of Federal Regulations, Parts 1910 and 1926 (29 CFR 1910 and 29 CFR 1926).

O. Owner: The City of Houston

P. PEL: Permissible Exposure Limit. An employee exposure, without regard to the use of respirators, to an airborne concentration of lead of 50 µg/m3 over an 8 hour TWA.

Q. POTW: Publicly Owned Treatment Works

R. RCRA: Resource Conservation and Recovery Act. Federal law pertaining to hazardous waste management. EPA implementing regulations are contained in 40 CFR 240-280.

S. Regulated Area: Area established by the Contractor to demarcate the zone(s) beyond which airborne concentrations of lead do not exceed the Action Level.

T. SSPC: Society for Protective Coatings. An independent, non-profit organization of engineers, technical specialists, and Contractors whose goal is research and development of new coatings and methods for removal, application, and disposal of existing coatings on industrial structures.

U. Tarpaulins: Flexible fabric, vinyl, plastic or canvas cover sheets, impenetrable to dust, wind, and water, used to enclose the cable and/or scaffold support system comprising the containment enclosure.

V. TCLP: Toxicity Characteristic Leaching Procedure. Laboratory tests conducted on wastes that determine the amount of hazardous materials that leach out into a test solution. The test is intended to simulate the properties of water as it leaches through a solid waste landfill. TCLP testing is defined in 40 CFR 261, Appendix II.

W. TSP: Total Suspended Particulate

PART 2 PRODUCTS

2.01 MATERIAL AND EQUIPMENT

A. The Contractor is to supply materials and equipment to insure the safety and protection of workers and the environment in accordance with these specifications.

PART 3 EXECUTION

3.01 ENVIRONMENTAL PROTECTION AND MONITORING

NOTE: Section 09971 "Painting and Protective Coatings", 2.04 "Containment System" specifically identifies containment system requirements.

A. Protection of Ambient Air: Visible emissions are to be controlled to meet, as a minimum, TAC 30 Chapter 111," Control of Air Pollution from Visible Emissions and Particulate Matter" requirements and SSPC-Guide 6I (CON), Level 1 Emissions. Air monitoring and analysis may be performed by the City during abrasive blast cleaning operations. Such monitoring will be in accordance with 40

CFR 50, Appendix B, "Reference Method for the Determination of Suspended Particulate Matter in the Atmosphere" and/or 40 CFR 50, Appendix G, "Reference Method for the Determination of Lead in Suspended Particulate Matter Collected from Ambient Air". The limits for down wind pollutant concentrations allowed during blasting operations are as follows:

PM-10: 450 micrograms/cubic meter/ 8 hr.. (40 CFR 50.6)

Lead (Pb): 13.5 micrograms/cubic meter/8 hr.. (40 CFR 50.12)

Visible emissions and/or monitored emissions for PM-10 and TSP lead in excess of the above levels shall be cause for shut down of the project until corrections to control/ containment system or paint removal/ surface preparation operations are made to comply with these requirements.

B. Protection of Surface and Storm Water: The Contractor shall take all necessary precautions to ensure lead contaminants do not enter surface waters or storm water drainage systems.

1. The Contractor shall protect the area around ditches and drainage inlets. Daily verification of proper protection to minimize the potential contaminants reaching the drainage system shall be performed.

2. The Contractor shall collect all potentially contaminated process waters for testing and, as appropriate, treatment. Process water from pressure washing, wet abrasive blast cleaning or hygiene facilities shall not be discharged to drainage systems or surface waters.

3. The Contractor may remove lead or other heavy metals from such waters through filtration, ion exchange or other approved means. Following treatment, water samples must be tested prior to disposal. Discharge to sanitary sewer lines requires authorization, in writing, from a POTW.

C. Protection of Soil and Grounds: The Contractor shall protect the soil around the structure to ensure that the soil does not become contaminated. Where lead is present in the coatings to be removed, as indicated in Section 02136 "Waste Material Handling and Disposal", the Contractor shall provide for the sampling and analysis of soil samples for total lead content.

1. Sampling and analysis shall be performed prior to commencement of paint removal operations to establish a background "base level". Soil samples shall be taken 3 feet from the base of the tank(s), at a distance of 6-10 feet beyond the proposed containment structure and at the property line.

2. Samples from each area shall be taken in a minimum of four directions, at

circular increments of 90^0, one of which shall include the direction of prevailing wind. Samples shall also be obtained, at the direction of the engineer, at the closest points of public access (i.e. housing, park, school).

3. The soil sampling procedure shall be as outlined in SSPC Guide 6 Section 5.5.5. Each sampling point shall be sufficiently identified on a site map to allow return to the exact location upon project completion.

4. Each sample shall be split in two portions, one for immediate analysis and the other sealed, preserved and furnished to the Engineer. The samples shall be analyzed in accordance with EPA Method 3050, "Acid Digestion of Sediments, Sludges and Soils", and shall be performed by a qualified laboratory approved by the Engineer.

5. Samples shall be obtained at the completion of work (post-construction samples) from all locations from which pre-construction samples were obtained. Samples shall be collected, handled and tested in the same manner as described above.

6. Upon completion of the work, soils found to be contaminated with lead in greater quantity than found in the background "base level", established at the start of the work, shall be removed by the Contractor to the depth necessary to achieve a lead content equivalent to, or below, the pre-construction back ground levels. Disposal shall be in accordance with applicable regulations.

7. The Contractor shall replace in-kind (i.e., topsoil, structural fill, etc.) with an equivalent amount of non-contaminated soil, compact in place and grade to pre-existing conditions. The Contractor shall also replace in-kind any surface improvements, such as grass, shrubs, etc. that were damaged or destroyed by the work. The soil removal, replacement and related work is to be performed by the Contractor at no additional cost to the Owner.

3.02 WORKER PROTECTION

A. The Contractor shall develop a written Compliance Program to establish and implement practices and procedures for assuring that no employee is exposed to lead at concentrations greater than 50 micrograms per cubic meter of air ($\mu g/m^3$), the OSHA permissible exposure limit (PEL). This program is in addition to other OSHA hazard communication and safety and health requirements of the project, and shall be revised and updated at least every six months.

1. The program shall establish methods for complying with this specification and the OSHA Construction Industry Lead Standard, 29 CFR 1926.62(e)(2)(ii). The Federal regulation is referred to as the "Lead

Standard" for the purpose of this specification.

2. The program shall apply to all Contractor employees associated with lead on the project, and to subcontractors working under the direct control of the Contractor who are associated with lead on the project.

3. The program shall assign the specific responsibility for implementation and enforcement of the program to the Contractors' company management. The Contractor's Competent Person(s) shall be identified, by name, and qualifications submitted. The Competent Person shall be on-site during any operations which involve the removal, handling or disturbing of lead containing materials.

4. The program shall contain a description of each activity in which lead is emitted (e.g. equipment used, material involved, controls in place, crew size, employee job responsibilities, operating procedures and maintenance practices).

5. The program shall contain a report of the technology considered in meeting the PEL and air monitoring data which documents the source of lead emissions.

6. The program shall contain a work practice program which includes items required in the lead standard such as protective clothing and equipment, housekeeping, and hygiene facilities and practices.

B. Exposure Monitoring: The Contractor shall be responsible for conducting and reporting worker exposure assessments in accordance with 29 CFR 1926.62.

1. Representative personal air samples shall be collected at the beginning of the lead removal work to determine employee lead exposures. Tasks involving potential lead exposure include, but are not limited to, paint removal operations, clean-up, and debris handling operations. Full shift (at least 7 hours) air samples shall be collected for each job classification in the exposure area. The range of exposures for lead removal and cleanup activities shall be determined.

2. During the initial monitoring, workers performing the following activities (or equivalent) shall be protected to the anticipated exposure levels which are dictated by the lead standard:

   a. 500 $\mu g/m^3$: Manual demolition of structures containing lead-containing coatings or paint (e.g., dry wall), manual scraping, manual sanding, heat gun applications, power tool cleaning with dust collection systems, and spray painting with lead paint.

b. 2,500 $\mu g/m^3$: Using lead-containing mortar, lead burning, or conducting the following activities where lead-containing coatings or paint are present: rivet busting, power tool cleaning without dust collection systems, clean-up activities where dry expendable abrasives are used, and the movement and removal of abrasive blasting enclosures.

c. More than 2,500 $\mu g/m^3$: Activities involving lead containing coatings or paint on structures disturbed by abrasive blasting, welding, cutting, and torch burning.

3. Protection requires compliance with the necessary respiratory protection, personal protective clothing and equipment, change areas and washing facilities, blood lead and zinc protoporphyrin monitoring, and employee training. The protection measures shall be modified, as necessary, after the exposure results are received.

4. Where initial monitoring indicates that lead exposures are below the Action Level, and where work activities and conditions remain the same as at the time of initial sampling, additional monitoring need not be repeated for that work activity.

5. Where the initial monitoring of a given work activity indicates that lead exposures are at or above the Action Level, additional exposure monitoring shall be conducted monthly. The monthly monitoring is more frequent than frequencies established in the lead standard which are at least every 6 months if above the Action Level, but below the PEL, or every 3 months if above the PEL.

6. All air samples shall be collected and analyzed according to NIOSH Method 7082, or equivalent. All samples shall be analyzed by laboratories accredited by the American Industrial Hygiene Association for metals analysis.

7. All exposed employees shall be notified in writing of the monitoring results within five (5) days after receiving the results.

8. The Action Level for airborne lead exposure is 30 $\mu g/m^3$, as an 8-hour time weighted average (TWA) concentration, without regard to the use of respirators. Whenever workers' airborne lead exposures exceed the Action Level, the Contractor shall implement the following:

   a. Periodic Exposure Monitoring
   b. Employee Information and Training

c. Employee Medical Surveillance and Medical Removal Protection
d. Housekeeping
e. Record keeping
f. Signs and Regulated Areas

9. The Permissible Exposure Limit (PEL) for airborne lead exposure is 50 $\mu g/m^3$, as an 8-hour TWA concentration. When the work area contains airborne lead levels above the PEL the Contractor shall implement the following in addition to those items listed in 3.02.B.8 of this section:

a. Compliance Program
b. Respiratory Protection
c. Protective Clothing and Equipment
d. Hygiene Facilities and Practices

C. Respiratory Protection: After feasible engineering controls and work practices have been implemented, respiratory protection shall be used to maintain employees' lead exposures below the PEL.

1. Respirators shall be worn by all employees, other Contractors, inspectors, or observers who enter regulated areas.

2. The Contractor shall develop a written Respiratory Protection Program in compliance with 29 CFR 1910.134, paragraphs (b), (d), (e), and (f), and the lead standard. The program shall address the selection, use, maintenance, and inspection of respirators, and qualifications for respirator users.

D. Protective Clothing and Equipment: The Contractor shall provide protective clothing and equipment and ensure they are worn by all employees whose lead exposures exceed the PEL, or who enter regulated areas.

1. Protective clothing shall include washable and/or disposable full body coveralls, gloves, foot coverings, and hoods. Other protective equipment shall include face shields, hard hats, eye protection, and hearing protection as appropriate.

2. Disposable protective clothing shall be used for no more than one work day. Such clothing may have to be disposed of as hazardous waste.

3. Reusable protective equipment shall be cleaned or replaced weekly if exposure levels are less than 200 $\mu g/m^3$, or daily if the exposure levels are greater than or equal to 200 $\mu g/m^3$.

4. Clothing shall not be removed or "cleaned" by any means which could reintroduce the lead dust into the ambient air. This includes brushing,

shaking, and blowing. Vacuums equipped with HEPA filters shall be used for this purpose.

5. Reusable coveralls shall be collected at the end of each work day in closed containers. The containers shall be labeled in accordance with the requirements of 29 CFR 1926.62(g)(2)(vii). Contaminated clothing shall be cleaned in accordance with all applicable Federal, State, or local regulations pertaining to lead-contaminated laundry and water discharge. Laundries shall be informed that the clothing contains lead. If the clothing is washed on site, the discharge water shall be filtered, containerized, and arrangements made with the local POTW or other approved means of proper disposal.

6. Protective clothing and equipment shall be removed in the contaminated section of the change area and shall not be worn into any clean areas.

7. The Contractor shall provide the necessary clothing and equipment for use by the Owner and its designated representatives.

E. Housekeeping: Accumulations of lead-containing dust and debris generated by work activities shall be removed and cleaned daily.

1. All persons doing the cleanup shall be trained in performing lead activities, respirator qualified, and participate in the medical surveillance program. Respirators and protective clothing shall be worn by all persons doing the cleanup.

2. Compressed air may be used for housekeeping if used within containment and in conjunction with a ventilation system designed to capture the dust. Otherwise, HEPA-filtered vacuum cleaners shall be employed.

3. All lead-containing dust and debris shall be collected in sealed containers. The waste shall be tested to determine whether it will be disposed of as hazardous waste.

F. Personal Hygiene Facilities and Practices

1. Clean change areas shall be provided when employees' lead exposures exceed the PEL. The change areas shall be equipped with storage facilities for street clothing and a separate area for the removal and storage of lead-contaminated clothing and equipment. They shall be designed and used so that contamination of street clothing does not occur. Employees shall not leave the project site wearing any clothing worn while performing lead activities. Airborne lead exposures in the change area shall be maintained below the Action Level.

2. Shower facilities shall be provided whenever employees' lead exposures exceed the PEL. Shower facilities shall comply with OSHA Sanitation Standard, 29 CFR 1929.51. All employees whose lead exposures exceed the PEL shall shower at the end of each work shift or before leaving the project area. The shower facilities shall be made available for use by the Owner and its representatives, such as inspectors or observers.

3. Arrangements shall be made with the local POTW for the proper disposal of the shower and wash water after filtration (e.g., through a three stage 100, 50, and 5 micron filtering system), ion exchange, or other approved treatment technology.

4. Clean lunch areas shall be provided for all employees whose lead exposures exceed the PEL. Employees shall remove or clean (by vacuuming) their protective clothing and wash their hands and face before entering the lunch area. Lead exposures in the lunch area shall be maintained as free as practicable from lead contamination.

5. An adequate number of clean lavatory and hand washing facilities shall be provided. These shall comply with the OSHA Sanitation Standard, 29 CFR 1929.51.

6. Eating, drinking, smoking, chewing of food or tobacco products, or the application of cosmetics shall not be permitted in any areas where the lead exposures exceed the PEL. Thorough washing of hands and face is required prior to undertaking any of these activities.

G. Medical Surveillance and Medical Removal Protection

1. All employees who are exposed to lead above the Action Level in a single day during this project shall be provided with initial and periodic medical examinations and blood lead tests as required by the lead standard. A final blood lead test shall be provided for each worker upon completion of the project, or at any time a worker's employment at the project ceases.

2. When blood lead levels over 50 µg/dl are encountered, the Contractor shall provide for the temporary removal of employees from lead exposure above the Action Level. The required medical surveillance and periodic blood lead tests shall be provided in strict accordance with the lead standard throughout the removal.

3. Employees who will be required to wear a respirator or who request one shall be provided with a respirator and the necessary medical examinations to determine their ability to wear a respirator.

4. All examinations shall be provided by the Contractor and shall be performed by or under the direct supervision of a licensed physician.

H. Employee Information and Training

1. The Contractor shall provide lead training for all employees who are exposed to lead above the Action Level for this project.

2. The content of lead training shall include, as a minimum, those items listed in the lead standard.

3. Training shall also include hazard communication in accordance with 29 CFR 1926.59.

4. The Contractor shall notify other employers at the project site of the nature of the lead exposure work, the need to remain out of exposure areas, the warning sign and labeling system in effect, and the potential need for them to take measures to protect their employees.

I. Signs and Regulated Areas

1. The Contractor shall establish a regulated area surrounding activities where lead exposures exceed the Action Level. This includes locations where lead-containing debris is handled or transferred to storage containers.

2. The regulated area shall be demarcated by ropes, tape, walls, or containment's with caution signs posted at all accessible sides. Signs shall contain the legend:

WARNING
LEAD WORK AREA
POISON
NO SMOKING OR EATING

3. The Contractor shall control access of persons into regulated areas. Access shall be limited to individuals with proper training and personal protective equipment, and medical surveillance testing.

4. All persons entering regulated areas shall wear protective clothing and respirators.

5. Eating, drinking, smoking, and chewing of food or tobacco products shall be prohibited in regulated areas and in any area where lead exposures exceed the Action Level.

J. Record keeping: All records relating to training, medical examinations, blood lead monitoring, and exposure monitoring shall be maintained by the Contractor as required by the lead standard. All records shall be available for review by the Owner or its representative upon request.

3.03 CERTIFIED INDUSTRIAL HYGIENIST (CIH)

A. The Contractor shall provide for the services of a Certified Industrial Hygienist (CIH) who must be certified by the American Board of Industrial Hygiene in comprehensive practice.

B. Duties of the CIH shall be as follows:

1. Conduct and/or verify training for contractor employees in accordance with 29 CFR 1926.62 (l).

2. Review and approve Contractor's Written Compliance Plan for conformance to 29 CFR 1926.62(e)(2)(ii) and this Specification.
3. Monitor and evaluate work weekly to assure conformance with the approved plan and that hazardous exposure is adequately controlled in accordance with worker safety and health requirements of these specifications

4. Provide monthly reports of work compliance with control requirements in regards to working in a lead environment.

C. Activities of the CIH shall include:

1. Meet with City to discuss details of Contractor's Written Compliance Plan for lead paint removal.

2. Ensure worker and area air monitoring, testing and reporting are conducted by or under the direction of the CIH.

3. Furnish a detailed worker and area air monitoring schedule coordinated with Contractor's proposed production schedule.

4. Directing, monitoring and inspecting lead paint removal work to ensure that the requirements of the Contract have been satisfied during the entire lead paint removal operation.

5. Report results of air monitoring samples to the Engineer, signed by the CIH within 48 hours after the air samples are taken.

6. The CIH shall review sampling data, collected on a day when lead paint

removal operations occur, to determine if conditions require any change in work methods. Removal work shall not continue until approval is given by the CIH.

7. The CIH shall verify in writing and submit monitoring data to verify that:

   a. Air borne lead levels at and beyond the lead control (regulated) area were and remained less than 30 mg/m^3 of air

   b. Contractor conformance to 29 CFR 1926.62 and Item 3.02, above

   c. There were no visible accumulations of lead contaminated paint, dust or debris on the work site. Adjacent areas that may have become contaminated were properly cleaned and inspected.

   d. The CIH shall verify that the work area and contractor's equipment have been adequately cleaned of lead contamination prior to demobilization from the work site.

3.04 DEMOBILIZATION

The Contractor shall not remove the lead control area, boundaries, warning signs, etc. prior to proper removal of all hazardous wastes, debris and materials from the site and the City's receipt and acceptance of the CIH's verification.

END OF SECTION

Section 01410

TPDES REQUIREMENTS

1.01 SECTION INCLUDES

A. Documentation to be prepared and signed by Contractor/Operator before conducting construction operations, in accordance with the Texas Pollutant Discharge Elimination System (TPDES) Construction General Permit Number TXR 150000 issued February 15, 2008 (the Construction General Permit).

B. Implementation, maintenance inspection, and termination of storm water pollution prevention control measures including, but not limited to, erosion and sediment controls, storm water management plans, waste collection and disposal, off-site vehicle tracking, and other appropriate practices shown on the Drawings or specified elsewhere in the Contract.

C. Review of the Storm Water Pollution Prevention Plan (SWP3) implementation in a meeting with Project Manager prior to start of construction.

1.02 DEFINITIONS

A. Commencement of Construction Activities: The exposure of soil resulting from activities such as clearing, grading, and excavation activities, as well as other construction related activities (e.g., stock piling of fill material, demolition).

B. Large Construction Activity: Project that:o

1. disturbs five acres or more, or

2. disturbs less than five acres but is part of a larger common plan of development that will disturb five acres or more of land.

C. Small Construction Activity: Project that:

1. disturbs one or more acres but less than five acres, or

2. disturbs less than one acre but is part of a larger common plan of development that will ultimately disturb one or more acres but less than five acres.

D. TPDES Operator:

Operator - The person or persons associated with a large or small construction activity that is either a primary or secondary as defined below:

Primary Operator – the person or persons associated with a large or small construction activity that meets either of the following two criteria:

(a) the persons have operational control over construction plans and specifications, including the ability to make modifications to those plans and specifications; or

(b) the person or persons have day-to-day operational control of those activities at a construction site that are necessary to ensure compliance with a storm water pollution prevention plan (SWP3) for the site or other permit conditions (e.g., they are authorized to direct workers at a site to carry out activities required by the SWP3 or comply with other permit conditions).

Secondary Operator – The person whose operational control is limited to the employment of other operators or to the ability to approve or disapprove changes to plans and specifications. A secondary operator is also defined as a primary operators if there are no other operators if there are no other operators at the construction site.

PART 2 P R O D U C T S - Not Used

PART 3 E X E C U T I O N

3.01 SITE SPECIFIC STORM WATER POLLUTION PREVENTION PLAN (SWP3)

A. Prepare a SWP3 following Part III of the Construction General Permit and the Storm Water Management Handbook for Construction Activities issued under City Ordinance Section 47-695(b). If conflicts exist between the Construction General Permit and the handbook, the more stringent requirements will apply.

B. Update or revise the SWP3 as needed during the construction following Part III, Section E of the Construction General Permit.

C. Submit the SWP3 and any updates or revisions to Project Manager for review and address comments prior to commencing, or continuing, construction activities.

3.02 NOTICE OF INTENT For Large Construction Activity

A. Fill out, sign, and date TCEQ Form 20022 (03/05/2008) Notice of Intent (NOI) for Storm Water Discharges Associated with Construction Activity under the TPDES Construction General Permit (TXR 150000), **ATTACHMENT 1** of this Section 01410.

B. Transmit the signed Contractor's copy of TCEQ Form 20022 (03/05/2008), along with a $325.00 check, made out to Texas Commission on Environmental Quality, and the completed Payment Submittal Form to Project Manager.

C. Project Manager will complete a separate TCEQ Form 20022 (03/05/2008) for City's Notice of Intent, and will submit both Notices, along with checks for application fees, to the TCEQ.

D. Submission of the Notice of Intent form by both the City and Contractor to TCEQ if mailing is required a minimum of seven days before Commencement of Construction Activities.

3.03 CONSTRUCTION SITE NOTICE FOR SMALL CONSTRUCTION ACTIVITY

A. Fill out, sign, and date the Construction Site Notice, Attachment 2 to TPDES General Permit TXR 150000, "Construction Site Notice", **ATTACHMENT 2** of this Section 01410.

B. Transmit the signed Construction Site Notice to Project Manager at least seven days prior to Commencement of Construction Activity.

3.04 CERTIFICATION REQUIREMENTS

A. Fill out TPDES Operator's Information form, **ATTACHMENT 3** of this Section 01410, including Contractor's name, address, and telephone number, and the names of persons or firms responsible for maintenance and inspection of erosion and sediment control measures. Use multiple copies as required to document full information.

B. Contractor and Subcontractors shall sign and date the Contractor's / Subcontractor's Certification for TPDES Permitting, **ATTACHMENT 4** of this Section 01410. Include this certification with other Project certification forms.

C. Submit properly completed certification forms to Project Manager for review before beginning construction operations.

D. Conduct inspections in accordance with TCEQ requirements. Ensure persons or firms responsible for maintenance and inspection of erosion and sediment control measures read, fill out, sign, and date the Erosion Control Contractor's Certification for Inspection and Maintenance. Use the City of Houston Storm Water Pollution Prevention Plan, Construction Site Inspection Report, **ATTACHMENT 5** of this Section 01410 to record maintenance inspections and repairs.

3.05 RETENTION OF RECORDS

A. Keep a copy of this document and the SWP3 in a readily accessible location at the construction site from Commencement of Construction Activity until submission of the Notice of Termination (NOT) for Storm Water Discharges Associated with Construction Activity under TPDES Construction General Permit (TXR 150000). Contractors with day-to-day operational control over SWP3 implementation shall have a copy of the SWP3 available at a central location, on-site, for the use of all operators and those identified as having responsibilities under the SWP3. Upon submission of the NOT, submit all required forms and a copy of the SWP3 with all revisions to Project Manager.

3.06 REQUIRED NOTICES

A. Post the following notices from effective date of the SWP3 until date of final site stabilization as defined in the Construction General Permit:

1. Post the TPDES permit number for Large Construction Activity, with a signed TCEQ Construction Site Notice for large or Small Construction Activity. Signed copies of the City's and Contractor's NOI must also be posted.

2. Post notices near the main entrance of the construction site in a prominent place where it is safely and readily available for viewing by General Public, Local, State, and Federal Authorities. Post name and telephone number of Contractor's local contact person, brief project description and location of the SWP3.

    a. If posting near a main entrance is not feasible due to safety concerns, coordinate posting of notice with Project Manager to conform to requirements of the Construction General Permit.

    b. If Project is a linear construction project (e.g.: road, utilities, etc.), post notice in a publicly accessible location near active construction. Move notice as necessary.

3. Post a notice to equipment and vehicles operators, instructing them to stop, check, and clean tires of debris and mud before driving onto traffic lanes. Post at each stabilized construction access area.

4. Post a notice of waste disposal procedures in a readily visible location on site.

3.07 ON-SITE WASTE MATERIAL STORAGE

A. On-site waste material storage shall be self-contained and shall satisfy appropriate local, state, and federal rules and regulations.

B. Prepare list of waste material to be stored on-site. Update list as necessary to include up-to-date information. Keep a copy of updated list with the SWP3.

C. Prepare description of controls to reduce pollutants generated from on-site storage. Include storage practices necessary to minimize exposure of materials to storm water, and spill prevention and response measures consistent with best management practices. Keep a copy of the description with the SWP3.

3.08 NOTICE OF TERMINATION

A. Submit a NOT, **ATTACHMENT 7** of this Section 01410, to Project Manager within 30 days after:

1. Final stabilization has been achieved on all portions of the site that are the responsibility of the Contractor; or

2. Another operator has assumed control over all areas of the site that have not been stabilized; and

3. All silt fences and other temporary erosion controls have either been removed, scheduled to be removed as defined in the SWP3, or transferred to a new operator if the new operator has sought permit coverage.

B. Project Manager will complete City's NOT and submit Contractor and City's notices to the TCEQ and MS4 entities.

END OF SECTION

PAGE LEFT INTENTIONALLY BLANK

ATTACHMENT 1

Notice of Intent (NOI) for Storm Water Discharges Associated with Construction Activity under the TPDES Construction General Permit (TXR150000)

For help completing this application, read the TXR150000 NOI Instructions (TCEQ-20022-Instructions).

TCEQ Office Use Only
TPDES Permit Number: TXR15|__|__|__|__| - NO
GIN Number: |__|__|__|__|__|__|__|__|

A. Construction Site Operator ☐ New ☐ No Change Customer Reference Number: CN_____
Name: _____
Mailing Address: _____ City: _____ State: ____ Zip Code: _____
Country Mailing Information (*if outside USA*) Territory: _____ Country Code: _____ Postal Code: _____
Phone Number: _____ Extension: _____ Fax Number: _____
E-mail Address: _____
Type of Operator: ☐ Individual ☐ Sole Proprietorship - D.B.A. ☐ Partnership ☐ Corporation ☐ Federal Government
☐ State Government ☐ County Government ☐ City Government ☐ Other: _____
Independent Operator? ☐ Yes ☐ No Number of Employees: ☐ 0-20 ☐ 21-100 ☐ 101-250 ☐ 251-500 ☐ 501 or higher
Federal Tax ID: _____ State Franchise Tax ID Number: _____ DUNS Number: _____

B. Billing Address
Name: _____
Mailing Address: _____ City: _____ State: ____ Zip Code: _____
Country Mailing Information (*if outside USA*) Territory: _____ Country Code: _____ Postal Code: _____

C. Project / Site Information ☐ New ☐ No Change Regulated Entity Reference Number: RN_____
Name: _____
Mailing Address: _____ City: _____ State: ____ Zip Code: _____
Physical Address: _____ City: _____ County: _____ Zip Code: _____
Location Access Description: _____
Latitude: ___ ° ___ ' ___ " N Longitude: ___ ° ___ ' ___ " W Degrees (°), Minutes ('), and Seconds (")
Latitude: _____ Longitude: – _____ Decimal Form
Standard Industrial Classification (SIC) code: _____ Also, describe the construction activity at this site *(do not repeat the SIC code)*:
_____
Has a storm water pollution prevention plan been prepared as specified in the general permit (TXR150000)? ☐ Yes ☐ No
Estimated area of land disturbed (to the nearest acre): _____ Is the project / site located on Indian Country Lands? ☐ Yes ☐ No
Does this project / site discharge storm water into a municipal separate storm sewer system (MS4)? ☐ Yes ☐ No
If yes, provide the name of the MS4 operator: _____
Provide the name or segment number of the water body that receives storm water from this project / site: _____

D. Contact - If the TCEQ needs additional information regarding this application, who should be contacted?
Name: _____ Title: _____
Phone Number: _____ Extension: _____ Fax Number: _____
E-mail Address: _____

E. Payment Information - Check / Money Order Number: _____ Name on Check / Money Order: _____

F. Certification
I certify under penalty of law that this document was prepared under my direction or supervision in accordance with a system designed to assure that qualified personnel properly gather and evaluate the information submitted. Based on my inquiry of the person or persons who manage the system, or those persons directly responsible for gathering the information, the information submitted is, to the best of my knowledge and belief, true, accurate, and complete. I am aware there are significant penalties for submitting false information, including the possibility of fine and imprisonment for knowing violations.
Construction Site Operator:
Prefix: _____ First: _____ Middle: _____
Last: _____ Suffix: _____ Title: _____
Signature: _____ Date: _____

If you have questions on how to fill out this form or about the storm water program, please contact us at (512) 239-4671.
Individuals are entitled to request and review their personal information that the agency gathers on its forms. They may also have any errors in their information corrected. To review such information, contact us at (512) 239-3282.

The completed NOI must be mailed to the following address. Use the attached document to submit the $100 application fee. Please note that the NOI and application fee are submitted separately to different addresses.

Texas Commission on Environmental Quality
Storm Water & General Permits Team; MC - 228
P.O. Box 13087
Austin, Texas 78711-3087

TCEQ-20022 (05/03) **Page 1 of 2**

ATTACHMENT 1

Texas Commission on Environmental Quality
Payment Submittal Form

The storm water application fee shall be sent under separate cover to the Texas Commission on Environmental Quality.

This form must be used to submit your Storm Water Application Fee. Please complete the following information, staple your check in the space provided at the bottom of this document, and mail it to:

BY REGULAR U.S. MAIL

Texas Commission on Environmental Quality
Financial Administration Division
Cashier's Office, MC-214
P.O. Box 13088
Austin, TX 78711-3088

BY OVERNIGHT/EXPRESS MAIL

Texas Commission on Environmental Quality
Financial Administration Division
Cashier's Office, MC-214
12100 Park 35 Circle
Austin, TX 78753

Fee Code: GPA

Storm Water General Permit: TXR150000

Check / Money Order No: _____ Amount of Check/Money Order: _____

Date of Check or Money Order: _____

Name on Check or Money Order: _____

Facility / Site Name: _____

Facility / Site Physical Address: _____

City: _____ Zip Code: _____

Staple Check In This Space

ATTACHMENT 1

Completing the Notice of Intent for Storm Water Discharges Associated with Construction Activity under the TPDES Construction General Permit (TXR150000)

A. Construction Site Operator Information

Check boxes and Customer Reference Number

These boxes designate the operator's status as a TCEQ "customer"—in other words, an individual or business that is involved in an activity that we regulate. We assign each customer a number that begins with "CN," followed by nine digits. ***This is not a permit number, registration number, or license number.*** In the remainder of this section, we will use "this customer" to mean the operator for Part A of the form.

- If this customer has not been assigned a Customer Reference Number or if this number is unknown, check "New" and leave the space for the Customer Reference Number blank.
- If this customer has already been assigned this number, enter the operator's Customer Reference Number and:
  - Check "No Change" if all the remaining customer information is the same as previously reported. However, you must still complete most blanks in this form for this notice of intent to be valid.
  - If this customer's information has changed since the last time it was reported to the TCEQ, check neither box and complete the remainder of this notice of intent.
- ***Do not enter a permit number, registration number, or license number in place of the Customer Reference Number.***

Name

Enter the legal name of this customer as authorized to do business in Texas. Include any abbreviations (LLC, Inc., etc.).

Mailing Address

Enter a central and general mailing address for this customer to receive mail from the TCEQ. For example, if this customer is a large company, this address might be the corporate or regional headquarters. On the other hand, for a smaller business, this address could be the same as the site address.

If this is a street address, please follow US Postal Service standards. In brief, these standards require this information in this order:

- the "house" number—for example, the 1401 in 1401 Main St
- if there is a direction before the street name, the one- or two-letter abbreviation of that direction (N, S, E, W, NE, SE, SW, or NW)
- the street name (if a numbered street, do not spell out the number—for example, 6th St, not Sixth St)
- an appropriate abbreviation of the type of street—for example, St, Ave, Blvd, Fwy, Exwy, Hwy, Cr, Ct, Ln
- if there is a direction after the street name, the one- or two-letter abbreviation of that direction (N, S, E, W, NE, SE, SW, or NW)
- if there is a room number, suite number, or company mail code

City, State, *and* ZIP Code

Enter the name of the city, the two-letter USPS abbreviation for the state (for example, TX), and the ZIP Code. (Enter the full ZIP+4 if you know it.)

Country Mailing Information

If this address is ***outside*** the United States, enter the territory name, country code, and any non-ZIP mailing codes or other non–U.S. Postal Service features here. If this address is ***inside*** the United States, leave these spaces blank.

Phone Number *and* Extension

This number should correspond to this customer's mailing address given earlier. Enter the area code and phone number here. Leave "Extension" blank if this customer's phone system lacks this feature.

Fax Number

This number should correspond to this customer's mailing address given earlier. Enter the area code and fax number here.

E-mail Address

As with the mailing address, this should be a general address that is appropriate for e-mail to this customer's central or regional headquarters, if applicable.

If "No Change" was checked for this customer, you may skip the rest of the fields in this part of the form and continue to the next part of the NOI.

Type of Operator

Check ***only one*** box.

Check ...	*if this customer ...*
Individual	is a person and has not established a business to do whatever causes them to be regulated by us.
Sole Proprietorship—D.B.A.	is a business that is owned by only one person and has not been incorporated. This business may: • be under the person's name • have its own name ("doing business as," or d.b.a.) • have any number of employees
Partnership	is a business that is established as a partnership as defined by the Texas Secretary of State's Office.
Corporation	meets all of these conditions: • is a legally incorporated entity under the laws of any state or country • is recognized as a corporation by the Texas Secretary of State • has proper operating authority to operate in Texas
Federal, state, county, or city government (as appropriate)	is either an agency of one of these levels of government or the governmental body itself (If a utility district, water district, tribal government, college district, council of governments, or river authority, check "Other" and write in the specific type of government.)
Other	fits none of the above descriptions. Enter a short description of the type of customer in the blank provided.

Independent Operator?

Check "No" if this customer is a subsidiary or part of a larger company. Otherwise, check "Yes."

Number of Employees

Check one box to show the number of employees for this customer's entire company, at all locations. ***This is not necessarily the number of employees at the site named in this NOI.***

Federal Tax ID

All businesses, except for some small sole proprietors, should have a federal taxpayer identification number (TIN). Enter this number here. Use no prefixes, dashes, or hyphens. Individuals and sole proprietors do not need to provide a federal tax ID.

State Franchise Tax ID

Corporations and limited liability companies that operate in Texas are issued a franchise tax identification number. If this customer is a corporation or limited liability company, enter this number here.

DUNS Number

Most businesses have a DUNS (Data Universal Numbering System) number issued by Dun and Bradstreet Corp. If this customer has one, enter it here.

B. Billing Address

We will mail the annual fee invoice for this site to the address entered in this section.

Name

Enter the legal name of the person or business to which we should mail this site's fee invoice each year.

Mailing Address

Enter the specific mailing address to which we should mail this site's fee invoice each year. If this is a street address, please follow the US Postal Service standards as described under "A. Construction Site Operator Information" on page 1 of these instructions.

City, State, *and* ZIP Code

Enter the name of the city, the two-letter USPS abbreviation for the state (for example, TX), and the ZIP Code. (Enter the full ZIP+4 if you know it.)

Country Mailing Information

If this address is ***outside*** the United States, enter the territory name, country code, and any non-ZIP mailing codes or other non–U.S. Postal

ATTACHMENT 1

Service features here. If this address is ***inside*** the United States, leave these spaces blank.

C. Project / Site Information

Check boxes *and* Regulated Entity Reference Number
These boxes designate this site's status as a TCEQ "regulated entity"—in other words, a location where an activity that we regulate occurs. We assign each regulated entity a number that begins with "RN," followed by nine digits. ***This is not a permit number, registration number, or license number.***

- If this site has not been assigned a Regulated Entity Reference Number or if this number is unknown, check "New" and leave the space for the Regulated Entity Reference Number blank.
- If this site has already been assigned this number, enter the Regulated Entity Reference Number and:
  - Check "No Change" if all the remaining information is the same as previously reported. However, even if there has been no change, you must complete this section at least through "E-mail Address" for this NOI to be valid.
  - If this site's information has changed since the last time it was reported to the TCEQ, check neither box and complete the remainder of this notice of intent.
- ***Do not enter a permit number, registration number, or license number in place of the Regulated Entity Reference Number.***

Name
Enter the name by which you want this site to be known to the TCEQ.

Mailing Address
Enter the specific mailing address for this site. If this is a street address, please follow the US Postal Service standards as described under "A. Construction Site Operator Information" on page 1 of these instructions. If the project / site's mailing address is the same as what is provided in Section A, you may enter "Same as Section A".

City, State, *and* ZIP Code
Enter the name of the city, the two-letter USPS abbreviation for the state (for example, TX), and the ZIP Code. (Enter the full ZIP+4 if you know it.)

Physical Address
Enter the physical address of the site itself. TCEQ staff should be able to use this address to find the site. Please follow the US Postal Service standards as described under "A. Construction Site Operator Information" on page 1 of these instructions. If the project / site does not have a physical address, enter "No Address".

City, County, *and* ZIP Code
Enter the name of the city, the county, and the ZIP Code. (Enter the full ZIP+4 if you know it.) This information must be provided even if you have entered "No Address" in the previous field.

Location Access Description
Enter a physical description of the location of the site based on highway intersections and/or permanent landmarks.

Latitude *and* Longitude
Enter the latitude and longitude of the site in ***either*** degrees, minutes, and seconds ***or*** decimal form.

For help obtaining the latitude and longitude, go to:
http://www.tnrcc.state.tx.us/gis/drgview.html

Standard Industrial Classification (SIC) Code and Activity Description

Provide the SIC code that best describes the construction activity being conducted at the site.

For help with SIC codes, go to:
http://www.osha.gov/oshstats/sicser.html

In addition to the SIC code, you must also provide a description of the construction activity being conducted at the site. This may include such descriptions as: "Apartment Building Construction" or "Shopping Center Construction."

Storm Water Pollution Prevention Plan
This plan identifies the areas and activities that could produce contaminated runoff at your site and then tells how you will ensure that this contamination is mitigated. For example, in describing your mitigation measures, your site's plan might identify the devices that collect and filter storm water, tell how those devices are to be maintained, and tell how frequently that maintenance is to be carried out. ***You must develop this plan before you complete this NOI.*** This plan must be available for a TCEQ investigator to review on request. Specific requirements for the development of the plan can be found in the *Texas Pollutant Discharge Elimination System Construction General Permit (TXR150000)*.

Estimated Area of Land Disturbed
Provide the approximate number of acres that the construction site will disturb. It is appropriate to enter a value less than 5, only if the project is part of a larger common plan that disturbs five or more acres. If the acreage is less than 1, enter 1. "Disturb" means any clearing, grading, excavating, or other similar activities.

Is the site located on Indian Country Lands?
Check "Yes" only if the site is on a reservation or other areas designated by the federal government as Indian Country Lands. If not, check "No."

Destination of Storm Water Discharge
The storm water from your site eventually reaches a receiving water body such as a local stream or lake, possibly via a drainage ditch. The discharge may initially be into a municipal separate storm sewer system (MS4). Check the appropriate boxes for whether storm water is discharged into an MS4. If you checked "Yes" to "An MS4?", then enter the name of the entity that operates the storm sewer—often a city, town, or utility district, but possibly another form of government.

You must also provide the name of the water body that receives the discharge from the construction site (a local stream or lake). Storm water may be discharged directly to a receiving stream or via a storm sewer system. If known, please include the segment number if the discharge is to a classified water body.

For a map that includes segment numbers, go to:
http://www.tnrcc.state.tx.us/water/quality/data/index.html

D. Contact

Give all the relevant information for the person whom TCEQ can contact if there are questions about any of the information on this form—perhaps the same person who completed the form.

E. Payment Information

Provide the number and account holder name from the check or money order used to pay the $100 application fee.

F. Certification

The operator must sign and date this statement to validate this NOI. Be sure to enter the full legal name of the person signing the form and the relevant title—for example, "Operator," "Vice-President," or "Partner." Use the "Prefix" blank for such titles as Dr., Mr., or Ms., as desired. Use the "Suffix" blank for such designations as Ph.D., Jr., Sr., III, or J.D., if applicable.

For a corporation, the application shall be signed by a responsible corporate officer. A responsible corporate officer means a president, secretary, treasurer, or vice-president of the corporation in charge of a principal business function, or any other person who performs similar policy or decision-making functions for the corporation; or the manager of one or more manufacturing, production, or operating facilities employing more than 250 persons or having gross annual sales or expenditures exceeding $25 million (in second-quarter 1980 dollars). If authority to sign documents has been assigned or delegated to the manager in accordance with corporate procedures. Corporate procedures governing authority to sign permit applications may provide for assignment or delegation to applicable corporate positions rather than to specific individuals.

For a partnership or sole proprietorship, the application shall be signed by a general partner or the proprietor, respectively.

For a municipality, state, federal, or other public agency, the application shall be signed by either a principal executive officer or a ranking elected official. For purposes of this application, a principal executive officer of a federal agency includes the chief executive officer of the agency, or a senior executive officer having responsibility for the overall operations of a principal geographic unit of the agency (e.g. regional administrator of the United States Environmental Protection Agency).

Questions?

If you have questions about any of the information on this form, contact our Storm Water Program at 512/239-4671 or look for "Storm Water" on our Web site:

www.tceq.state.tx.us

ATTACHMENT 2

CONSTRUCTION SITE NOTICE

FOR THE
Texas Commission on Environmental Quality (TCEQ)
Storm Water Program

TPDES GENERAL PERMIT TXR150000

The following information is posted in compliance with **Part II.D.2.** of the TCEQ General Permit Number TXR150000 for discharges of storm water runoff from construction sites. Additional information regarding the TCEQ storm water permit program may be found on the internet at:
www.tnrcc.state.tx.us/permitting/waterperm/wwperm/tpdestorm

Contact Name and Phone Number:	
Project Description: (Physical address or description of the site's location, estimated start date and projected end date, or date that disturbed soils will be stabilized)	
Location of Storm Water Pollution Prevention Plan :	

For Construction Sites Authorized Under Part II.D.2. (Obtaining Authorization to Discharge) the following certification must be completed:

I _____ (Typed or Printed Name Person Completing This Certification) certify under penalty of law that I have read and understand the eligibility requirements for claiming an authorization under Part II.D.2. of TPDES General Permit TXR150000 and agree to comply with the terms of this permit. A storm water pollution prevention plan has been developed and implemented according to permit requirements. A copy of this signed notice is supplied to the operator of the MS4 if discharges enter an MS4 system. I am aware there are significant penalties for providing false information or for conducting unauthorized discharges, including the possibility of fine and imprisonment for knowing violations.

_____ _____
Signature and Title Date

PAGE LEFT INTENTIONALLY BLANK

ATTACHMENT 3

TPDES OPERATOR'S INFORMATION

Owner's Name and Address: City of Houston

Mr. _____
(City Official)

_____
(Department)
P. O. Box 1562
Houston, Texas 77251-1562
(713) 247-1000

Contractors' Names and Addresses:

General Contractor: _____
_____
_____
_____
Telephone: _____

Site Superintendent: _____
_____
_____
_____
Telephone: _____

Erosion Control and Maintenance Inspection: _____
_____
_____
_____
Telephone: _____

Subcontractors' Names and Addresses:

_____ _____
_____ _____
_____ _____
_____ _____
Phone: _____ Phone: _____

Note: Insert name, address, and telephone number of person or firms

PAGE LEFT INTENTIONALLY BLANK

ATTACHMENT 4

CONTRACTOR'S / SUBCONTRACTOR'S

CERTIFICATION FOR TPDES PERMITTING

I certify under penalty of law that I understand the terms and conditions of TPDES General Permit No. TXR150000 and the Storm Water Pollution Prevention Plan for the construction site identified as part of this certification.

Signature: _____

Name: (printed or typed) _____

Title: _____

Company: _____

Address: _____

Date: _____

Signature: _____

Name: (printed or typed) _____

Title: _____

Company: _____

Address: _____

Date: _____

Signature: _____

Name: (printed or typed) _____

Title: _____

Company: _____

Address: _____

Date: _____

PAGE LEFT INTENTIONALLY BLANK

ATTACHMENT 5

EPA NPDES Construction Inspection Form

The following inspection is being performed in compliance with Part IV.D.4. of the NPDES Region 6 Storm Water Construction General Permit [63 Fed. Reg. 36502] and being retained in accordance with Part V of the Permit. Qualified personnel (provided by the permittee or cooperatively by multiple permittees) shall inspect disturbed areas of the construction site that have not been finally stabilized, areas used for storage of materials that are exposed to precipitation, placement and effectiveness of structural control measures, and locations where vehicles enter or exit the site. Inspections shall be performed at least once every 14 days and within 24 hours of the end of a storm event of 0.5 inches or greater. Where sites have been temporarily stabilized, runoff is unlikely due to winter conditions, or during seasonal arid periods in arid areas (0-10 inches of rainfall annually) and semi-arid areas (10-20 inches annually) such inspections shall be conducted at least once every month. This form is primarily intended for use with construction projects in Texas and New Mexico. Permittees on Indian Country lands in Oklahoma, Louisiana and Arkansas and some oil and gas facilities in Oklahoma may use this form if they are eligible for this permit. Other facilities need to check with their NPDES authority before using this form.

If you do not know your NPDES Permit Number, contact the NOI Processing Center at (301)495-4145. This form was prepared as an example and it is not a required form for use with the permit. Alternative forms may be used if they contain all of the required information as set forth in the permit. This form and additional information regarding the NPDES Region 6 storm water program may be found on the Internet at http://www.epa.gov/region6/sw/. Any person with a complaint about the operation of this facility in regards to this permit should contact EPA Region 6 at (214)665-7112.

Permit Number(s) covered by this inspection (e.g. owners, developers, general contractor, builders)	
Signature and Certification in accordance with Part VI.G of the permit:	I certify under penalty of law that this document and all attachments were prepared under my direction or supervision in accordance with a system designed to assure that qualified personnel properly gathered and evaluated the information submitted. Based on my inquiry of the person or persons who manage the system, or those persons directly responsible for gathering the information, the information submitted is, to the best of my knowledge and belief, true, accurate, and complete. I am aware that there are significant penalties for submitting false information, including the possibility of fine and imprisonment for knowing violations. Signature_____Date_____
Date of Inspection	
Inspector Name	
Is there a copy of the permit language with the SWPPP?	❒ YES ❒ NO
Is the inspector qualified and are the qualifications documented in the SWPPP?	❒ YES ❒ NO
Is an NPDES storm water construction sign posted at the entrance for all permittees?	❒ YES ❒ NO

You may want to use EPA Region 6 construction checklist to assure components of the SWPPP are complete. This form, the construction sign, and the checklist are available on the Region 6 NPDES Storm Water Forms and Documents web page which may be found on the internet at http://www.epa.gov/earth1r6/6en/w/formsw.htm In addition to the checklist, you should provide a narrative (see next page) on the existing Best Management Practices and Structural Controls found during each inspection. Any problems identified in an inspection should be corrected within 7 days. The inspection should cover all components of the SWPPP and all potential pollutants. While eroded soil is the primary pollutant of concern, do not forget to inspect for other pollutant sources such as fuel tanks, paints, solvents, stabilization materials, concrete hardner, batch plants, and construction debris. The inspector will need to update the SWPPP to reflect findings of the inspection. The site map should be updated after an inspection to show controls that have been added or removed, to ensure the site map is kept current in accordance with Part IV.C. of the permit.

Revision 4, March 1, 2000

ATTACHMENT 5

Narrative Findings of the inspection:

Observations should include any findings of Best Management Practices or controls that are not in accordance with the SWPPP. If a control is not in place or failed, observe the reason why. A control removed temporarily for work is not necessarily a violation if properly recorded in the SWPPP. If it has been removed, record why it was removed and, if applicable, when it will be reinstalled. If the control has failed, observe the conditions so a conclusion may be made as to wether the control failed for improper maintenance or improper design. The qualified inspector will know when a failed control is inadequate and should be replaced by an improved control mechanism. Qualified inspectors are to have authority to make changes to the SWPPP to assure compliance. Controls that have not been installed should be given a reason why they are not installed and/or a scheduled date for installation if they are designed for a later phase of construction. After the inspection, the SWPPP and its site map should be updated to reflect current conditions of controls and Best Management Practices at the time of the inspection. This includes removing uninstalled controls from the site map or otherwise denoting on the site map if they are no longer installed if the controls have been removed because they are no longer necessary (e.g. stabilization has been achieved in that area).

ATTACHMENT 6

City of Houston

Storm Water Pollution Prevention Plan
Construction Site Inspection Report

TPDES/EPA Permit Number _____

COH Storm Water Quality Permit Number _____

DATE _____

No exceptions noted.

The following must be corrected prior to continuing work:

Public Notice improperly posted

Initial Construction Site Inspection Report information requires updating

Copy of NOI not on site

Storm water pollution prevention plan not on site

Erosion and sediment controls improperly installed

Erosion and sediment control devices improperly maintained

Fueling or washout areas not properly protected

Portocan or other sanitary facilities not properly protected

Self-inspection and maintenance records incomplete

Sediment from site outside area of construction

Other (see description below)

_____

_____

Please contact the Storm Water Quality Engineer at
611 Walker, RA-257, Houston TX 77002
713-837-7383 fax 713-837-0570

Once the above items have been corrected, call to arrange for reinspection. No further inspections for any construction related activity shall be made until the above items have been corrected.

Inspector's Signature	Contractor's Signature
Inspector's Name	Contractor's Name

not present

Distribution Stormwater Quality Engineer, Code Enforcement, Inspector, Operator
(Operator is Contractor)

Form _____ (10-01-01)

PAGE LEFT INTENTIONALLY BLANK

ATTACHMENT 7

Notice of Termination (NOT) for Storm Water Discharges Associated with Construction Activity under the TPDES Construction General Permit (TXR150000)

TCEQ Office Use Only
TPDES Permit Number: TXR15__|__|__|__| - NO
GIN Number: __|__ __|__ __|__|__|

For help completing this application, read the TXR150000 NOI Instructions (TCEQ-20023-Instructions).

A. TPDES Permit Number: TXR15_____

B. Construction Site Operator Customer Reference Number: CN_____
Name:_____
Mailing Address:_____
City:_____ State: --_____ Zip Code:_____
Country Mailing Information (*if outside USA*) Territory:_____ Country Code:_____ Postal Code:_____
Phone Number:_____ Extension:_____ Fax Number:_____
E-mail Address:_____

C. Project / Site Information Regulated Entity Reference Number: RN_____
Name:_____
Physical Address:_____
Location Access Description:_____
City:_____ County: --_____ Zip Code:_____

D. Contact - If the TCEQ needs additional information regarding this termination, who should be contacted?
Name:_____ Title:_____
Phone Number:_____ Extension:_____ Fax Number:_____
E-mail Address:_____

E. Certification
I certify under penalty of law that authorization under the TPDES Construction General Permit (TXR150000) is no longer necessary based on the provisions of the general permit. I understand that by submitting this Notice of Termination, I am no longer authorized to discharge storm water associated with construction activity under the general permit TXR150000, and that discharging pollutants in storm water associated with construction activity to waters of the U.S. is unlawful under the Clean Water Act where the discharge is not authorized by a TPDES permit. I also understand that the submittal of this Notice of Termination does not release an operator from liability for any violations of this permit or the Clean Water Act.

Construction Site Operator Representative:

Prefix:_____ First:_____ Middle:_____
Last:_____ Suffix:_____
Title:_____

Signature:_____ Date:_____

If you have questions on how to fill out this form or about the storm water program, please contact us at (512) 239-4671. Individuals are entitled to request and review their personal information that the agency gathers on its forms. They may also have any errors in their information corrected. To review such information, contact us at (512) 239-3282.

The completed NOT must be mailed to the following address:

Texas Commission on Environmental Quality
Storm Water & General Permits Team; MC - 228
P.O. Box 13087
Austin, Texas 78711-3087

TCEQ - 20023 (02/03) **Page 1 of 1**

PAGE LEFT INTENTIONALLY BLANK

ATTACHMENT 7

Completing the Notice of Termination for Storm Water Discharges Associated with Construction Activity under the TPDES Construction General Permit (TXR150000)

Who May File a Notice of Termination (NOT) Form
Permittees disturbing 5 acres or more (or part of a larger common plan of development or sale disturbing 5 acres or more) who are presently covered under the Texas Pollutant Discharge Elimination System (TPDES) Construction General Permit must submit a Notice of Termination (NOT) when final stabilization has been achieved on all portions of the site that is the responsibility of the permittee; or another permitted operator has assumed control over all areas of the site that have not been finally stabilized and all silt fences and other temporary erosion controls have either been removed, scheduled for removal as defined in the SWP3, or transferred to a new operator if the new operator has sought permit coverage. Erosion controls that are designed to remain in place for an indefinite period, such as mulches and fiber mats, are not required to be removed or scheduled for removal.

Final Stabilization occurs when either of the following conditions are met:

(a) All soil disturbing activities at the site have been completed and a uniform (e.g, evenly distributed, without large bare areas) perennial vegetative cover with a density of 70% of the native background vegetative cover for the area has been established on all unpaved areas and areas not covered by permanent structures, or equivalent permanent stabilization measures (such as the use of riprap, gabions, or goetextiles) have been employed.

(b) For individual lots in a residential construction site by either:

(1) the homebuilder completing final stabilization as specified in condition (a) above; or

(2) the homebuilder establishing temporary stabilization for an individual lot prior to the time of transfer of the ownership of the home to the buyer and after informing the homeowner of the need for, and benefits of, final stabilization.

(c) For construction activities on land used for agricultural purposes (e.g. pipelines across crop or range land), final stabilization may be accomplished by returning the disturbed land to its preconstruction agricultural use. Areas disturbed that were not previously used for agricultural activities, such as buffer strips immediately adjacent to a surface water and areas which are not being returned to their preconstruction agricultural use must meet the final stabilization conditions of condition (a) above.

A. TPDES Permit Number
Provide the TPDES permit number assigned to the operator of the construction site.

B. Construction Site Operator Information
Customer Reference Number
This number designates the operator's status as a TCEQ "customer"—in other words, an individual or business that is involved in an activity that we regulate. We assign each customer a number that begins with "CN," followed by nine digits. ***This is not a permit number, registration number, or license number.*** In the remainder of this section, we will use "this customer" to mean the operator for Part B of the form.

- If this customer has not been assigned a Customer Reference Number, leave the space for the Customer Reference Number blank.
- If this customer has already been assigned this number, enter the operator's Customer Reference Number.
- ***Do not enter a permit number, registration number, or license number in place of the Customer Reference Number.***

Name
Enter the legal name of this customer as authorized to do business in Texas. Include any abbreviations (LLC, Inc., etc.).

Mailing Address
Enter a central and general mailing address for this customer to receive mail from the TCEQ. For example, if this customer is a large company, this address might be the corporate or regional headquarters. On the other hand, for a smaller business, this address could be the same as the site address.

If this is a street address, please follow US Postal Service standards. In brief, these standards require this information in this order:

- the "house" number—for example, the 1401 in 1401 Main St
- if there is a direction before the street name, the one- or two-letter abbreviation of that direction (N, S, E, W, NE, SE, SW, or NW)
- the street name (if a numbered street, do not spell out the number—for example, 6th St, not Sixth St)
- an appropriate abbreviation of the type of street—for example, St, Ave, Blvd, Fwy, Exwy, Hwy, Cr, Ct, Ln
- if there is a direction after the street name, the one- or two-letter abbreviation of that direction (N, S, E, W, NE, SE, SW, or NW)
- if there is a room number, suite number, or company mail code

City, State, *and* ZIP Code
Enter the name of the city, the two-letter USPS abbreviation for the state (for example, TX), and the ZIP Code. (Enter the full ZIP+4 if you know it.)

ATTACHMENT 7

Country Mailing Information
If this address is ***outside*** the United States, enter the territory name, country code, and any non-ZIP mailing codes or other non–U.S. Postal Service features here. If this address is ***inside*** the United States, leave these spaces blank.

Phone Number *and* Extension
This number should correspond to this customer's mailing address given earlier. Enter the area code and phone number here. Leave "Extension" blank if this customer's phone system lacks this feature.

Fax Number
This number should correspond to this customer's mailing address given earlier. Enter the area code and fax number here.

E-mail Address
As with the mailing address, this should be a general address that is appropriate for e-mail to this customer's central or regional headquarters, if applicable.

C. Project / Site Information

Regulated Entity Reference Number
This number designates this site's status as a TCEQ "regulated entity"—in other words, a location where an activity that we regulate occurs. We assign each regulated entity a number that begins with "RN," followed by nine digits. ***This is not a permit number, registration number, or license number.***

- If this site has not been assigned a Regulated Entity Reference Number, leave the space for the Regulated Entity Reference Number blank.
- If this site has already been assigned this number, enter the Regulated Entity Reference Number.
- ***Do not enter a permit number, registration number, or license number in place of the Regulated Entity Reference Number.***

Name
Enter the name by which you want this site to be known to the TCEQ.

Physical Address
Enter the physical address of the site itself. TCEQ staff should be able to use this address to find the site.

Location Description
Enter a physical description of the location of the site based on highway intersections and/or permanent landmarks.

City, County, *and* ZIP Code
Enter the name of the city, the county, and the ZIP Code. (Enter the full ZIP+4 if you know it.)

D. Contact

Give all the relevant information for the person whom TCEQ can contact if there are questions about any of the information on this form—perhaps the same person who completed the form.

E. Certification

The operator must sign and date this statement to validate this NOI. Be sure to enter the full legal name of the person signing the form and the relevant title—for example, "Operator," "Operator's attorney," or "Senior Site Manager." Use the "Prefix" blank for such titles as Dr., Mr., or Ms., as desired. Use the "Suffix" blank for such designations as Ph.D., Jr., Sr., III, or J.D., if applicable.

For a corporation, the application shall be signed by a responsible corporate officer. A responsible corporate officer means a president, secretary, treasurer, or vice-president of the corporation in charge of a principal business function, or any other person who performs similar policy or decision-making functions for the corporation; or the manager of one or more manufacturing, production, or operating facilities employing more than 250 persons or having gross annual sales or expenditures exceeding $25 million (in second-quarter 1980 dollars), if authority to sign documents has been assigned or delegated to the manager in accordance with corporate procedures. Corporate procedures governing authority to sign permit applications may provide for assignment or delegation to applicable corporate positions rather than to specific individuals.

For a partnership or sole proprietorship, the application shall be signed by a general partner or the proprietor, respectively.

For a municipality, state, federal, or other public agency, the application shall be signed by either a principal executive officer or a ranking elected official. For purposes of this application, a principal executive officer of a federal agency includes the chief executive officer of the agency, or a senior executive officer having responsibility for the overall operations of a principal geographic unit of the agency (e.g. regional administrator of the United States Environmental Protection Agency).

Questions?

If you have questions about any of the information on this form, contact our Storm Water Program at 512/239-4671 or look for "Storm Water" on our Web site:

www.tceq.state.tx.us

Section 01422

REFERENCE STANDARDS

PART 1 G E N E R A L

1.01 SECTION INCLUDES

A. Section includes general quality assurance as related to Reference Standards and a list of references.

1.02 QUALITY ASSURANCE

A. For Products or workmanship specified by association, trade, or Federal Standards, comply with requirements of the standard, except when more rigid requirements are specified or are required by applicable codes.

B. Conform to reference standard by date of issue current on the date as stated in the General Conditions.

C. Request clarification from Project Manager before proceeding should specified reference standards conflict with Contract documents.

1.03 SCHEDULE OF REFERENCES

AASHTO	American Association of State Highway and Transportation Officials 444 North Capitol Street, N.W. Washington, DC 20001
ACI	American Concrete Institute P.O. Box 9094 Farmington Hills, MI 48333-9094
AGC	Associated General Contractors of America 333 John Carlyle Street Alexandria, VA 22314
AI	Asphalt Institute Research Park Drive P.O. Box 14052 Lexington, KY 40512

AITC	American Institute of Timber Construction 7012 S. Revere Parkway, Suite 140 Englewood, CO 80112
AISC	American Institute of Steel Construction One East Wacker Dr. Chicago, IL 60601
AISI	American Iron and Steel Institute 1101 17th Street NW, Suite 1300 Washington, DC 20036
ASME	American Society of Mechanical Engineers Three Park Avenue New York, NY 10016
ANSI	American National Standards Institute 1819 L Street NW Sixth Floor Washington, D.C. 20036
APA	American Plywood Association Box 11700 Tacoma, WA 98411
API	American Petroleum Institute 1220 L Street, N.W. Washington, DC 20005
AREA	American Railway Engineering and Maintenance-of-Way-Association 8201 Corporate Drive, Suite 1125 Landover, Maryland 20785
ASTM	American Society for Testing and Materials 100 Barr Harbor Drive West Conshohocken, PA 19428
AWPA	American Wood-Preservers' Association P.O. Box 5690 Granbury, TX 76049
AWS	American Welding Society 550 NW 42nd Avenue Miami, FL 33126

AWWA	American Water Works Association 6666 West Quincy Avenue Denver, CO 80235
COH	City of Houston P.O. Box 1562 Houston, TX 77251-1562
CLFMI	Chain Link Fence Manufacturers Institute 9891 Broken Land Parkway, Suite 300 Columbia, MD 21046
CRSI	Concrete Reinforcing Steel Institute 933 Plum Grove Road Schaumburg, IL 60173-4758
EJMA	Expansion Joint Manufacturers Association 25 North Broadway Tarrytown, NY 10591
FS	Federal Standardization Documents General Services Administration Specifications Unit (WFSIS) 7th and D Streets, S.W. Washington, DC 20406
ICEA	Insulated Cable Engineer Association P.O. Box 440 S. Yarmouth, MA 02664
IEEE	Institute of Electrical and Electronics Engineers 445 Hoes Lane P.O. Box 440 Piscataway, NJ 08855-459
ISA	International Society of Arboriculture P.O. Box 3129 Champaign, IL 61826-3129
MIL	Military Specifications General Services Administration Specifications Unit (WFSIS) 7th and D Streets, S.W. Washington, DC 20406

NACE	National Association of Corrosion Engineers 1440 South Creek Drive Houston, TX 77084-4906
NEMA	National Electrical Manufacturers' Association 1300 North 17th Street, Suite 1847 Rosslyn, VA 22209
NFPA	National Fire Protection Association 1 Batterymarch Park P.O. Box 9101 Quincy, MA 02269-9101
OSHA	Occupational Safety Health Administration U.S. Department of Labor Office of Public Affairs – Room N3647 Washington, DC 20210
PCA	Portland Cement Association 5420 Old Orchard Road Skokie, IL 60077-1083
PCI	Prestressed Concrete Institute 209 W. Jackson Blvd. Chicago, IL 60606
SDI	Steel Deck Institute P.O. Box 25 Fox River Grove, IL 60021
SSPC	Society for Protective Coatings (Steel Structures Painting Council) 40 24th Street, Sixth Floor Pittsburgh, PA 15222
TAC	Texas Administrative Code Texas Water Resources Conservation Commission P. O. Box 13087 Library MC-196 Austin, TX 78711-3087
TxDOT	Texas Department of Transportation 125 East 11th Street Austin, TX 78701-2483

UL	Underwriters' Laboratories, Inc. 333 Pfingston Road Northbrook, IL 60062
UNI-BELL	UNI-BELL Pipe Association 2655 Villa Creek Drive, Suite 155 Dallas, TX 75234

PART 2 P R O D U C T S - Not Used

PART 3 E X E C U T I O N - Not Used

END OF SECTION

Section 01450

CONTRACTOR'S QUALITY CONTROL

PART 1 G E N E R A L

1.01 SECTION INCLUDES

A. Quality assurance and control of Installation and manufacturers' field services and reports.

1.02 QUALITY ASSURANCE AND CONTROL OF INSTALLATION

A. Monitor quality control over Suppliers, manufacturers, Products, services, site conditions and workmanship, to produce work of specified quality at no additional cost to the City.

B. Comply fully with manufacturers' Installation instructions, including each step in sequence.

C. Request clarification from Project Manager before proceeding when manufacturers' instructions conflict with the Contract.

D. Comply with specified standards as minimum requirements for the Work except when more stringent tolerances, codes, or specified requirements indicate higher standards or more precise workmanship.

E. Perform the Work by persons qualified to produce a specified level of workmanship.

1.03 REFERENCES

A. Obtain copies of standards and maintain at job site when required by individual Specification sections.

1.04 MANUFACTURERS' FIELD SERVICES AND REPORTS

A. When specified in individual Specification sections, or as required by Project Manager, provide Product suppliers' or manufacturers' technical representative to observe site conditions, conditions of surfaces and Installation, quality of workmanship, start-up of equipment, operator training, testing, adjusting and balancing of equipment as applicable and to initiate required operation. Conform to minimum time requirements for start-up operations and operator training when provided in Specification sections.

B. At Project Manager's request, submit qualifications of manufacturers' representative to Project Manager 15 days in advance of required representatives' services. Representative is subject to approval by Project Manager.

C. Manufacturer's representatives shall report observations and site decisions or instructions given to applicators or installers that are supplemental or contrary to a manufacturer's written instructions. Submit report within 14 days of observation to Project Manager for review.

PART 2 P R O D U C T S - Not Used

PART 3 E X E C U T I O N - Not Used

END OF SECTION

Section 01452

INSPECTION SERVICES

PART 1 G E N E R A L

1.01 SECTION INCLUDES

A. Inspection services and references

1.02 INSPECTION

A. City Engineer will appoint an Inspector to represent the City and perform inspections, tests, and other services specified in individual Specification sections.

B. City Engineer may also appoint, employ, and pay an independent firm to provide additional inspection or construction management services as indicated in Section 01454 - Testing Laboratory Services.

C. The independent firm will submit reports to Project Manager, indicating observations and results of tests and indicating compliance or noncompliance with Contract requirements.

D. Contractor shall assist and cooperate with the Inspector; furnish samples of materials, design mix, equipment, tools, and storage.

E. Contractor shall notify Project Manager 24 hours prior to expected time for operations requiring services.

F. Contractor shall sign and acknowledge reports for Inspector.

PART 2 P R O D U C T S - Not Used

PART 3 E X E C U T I O N - Not Used

END OF SECTION

Section 01454

TESTING LABORATORY SERVICES

PART 1 G E N E R A L

1.01 SECTION INCLUDES

A. Testing laboratory services and Contractor responsibilities related to those services.

1.02 REFERENCES

A. ASTM C 1077 - Standard Practice for Laboratories Testing Concrete and Concrete Aggregates for Use in Construction and Criteria for Laboratory Evaluation.

B. ASTM D 3666 - Standard Specification for Minimum Requirements for Agencies Testing and Inspecting Bituminous Paving Materials.

C. ASTM D 3740 - Standard Practice for Minimum Requirements for Agencies Engaged in the Testing and/or Inspection of Soil and Rock as Used in Engineering Design and Construction.

D. ASTM E 329 - Standard Specification for Minimum Requirements for Agencies Engaged in the Testing and/or Inspection of Materials Used in Construction.

E. ISO/TEC Guide 25 - General Requirements for the Competence of Calibration and Testing Laboratories.

1.03 SELECTION AND PAYMENT

A. The City will select, employ, and pay for services of an independent testing laboratory to perform inspection and testing identified in Part 3 of individual Specification sections.

B. Contractor shall employ and pay for services of an independent testing laboratory or laboratories to perform inspection and testing identified in Part 2 of individual Specification sections.

C. Employment of a testing laboratory by the City shall not relieve Contractor of its obligation to perform work in accordance with requirements of Contract documents.

D. The City will deduct a minimum two-hour charge for testing laboratory time from periodic progress payment when operations requiring testing or inspection are canceled without prior notification.

E. The City will deduct cost of retesting from periodic progress payment whenever failed work is removed, replaced and retested.

1.04 QUALIFICATION OF LABORATORY

A. Meet laboratory requirements of ASTM E 329 and applicable requirements of ASTM C 1077, ASTM D 3666, and ASTM D 3740.

B. Meet ISO/TEC Guide 17025 conditions for accreditation by the American Association for Laboratory Accreditation (A2LA) in specific fields of testing required in individual Specification sections.

C. If laboratory subcontracts are part of the testing services, such work will be placed with a laboratory complying with the requirements of this Section.

1.05 LABORATORY REPORTS

A. Testing laboratory shall provide and distribute copies of laboratory reports to the distribution list Project Manager provides at the pre-construction conference.

B. Keep one copy of each laboratory report distributed or faxed at the site field office for duration of the Work.

C. Laboratory will fax material supplier, Contractor and Project Manager reports that indicate failing test results by no later than close of business on the working day following test completion and review.

1.06 LIMITS ON TESTING LABORATORY AUTHORITY

A. Laboratory may not release, revoke, alter, or enlarge requirements of the Contract.

B. Laboratory may not approve or accept any portion of the Work.

C. Laboratory may not assume Contractor duties.

D. Laboratory has no authority to stop the Work.

1.07 CONTRACTOR RESPONSIBILITIES

A. Provide safe access to the Work and to manufacturer's facilities for Project Manager and for testing laboratory personnel.

B. Provide testing laboratory with a copy of the Construction Schedule and a copy of each update to Construction Schedule.

C. Notify Project Manager and testing laboratory during normal working hours of the day previous to expected time for operations requiring inspection and testing services. When Contractor fails to make timely prior notification, do not proceed with the operations requiring inspection and testing services.

D. Notify Design Consultant 24 hours in advance when Specification requires presence of Design Consultant for sampling or testing.

E. Request and monitor testing as required to provide timely results and to avoid delays to the Work. Provide samples to laboratory in sufficient time to allow required test to be performed in accordance with specified test methods before intended use of the Product.

F. Cooperate with laboratory personnel in collecting samples on site. Provide incidental labor and facilities for safe access to the Work to be tested, to obtain and handle samples at site or at source of Products to be tested, and to facilitate tests and inspections including storage and curing of test samples.

G. Make arrangements with laboratory through Project Manager. Payment for additional testing will be made in accordance with Document 00700 - General Conditions:

1. Re-testing required for failed tests.

2. Re-testing for nonconforming work.

3. Additional sampling and tests requested beyond specified requirements.

4. Insufficient notification of cancellation of tests for work scheduled but not performed.

PART 2 P R O D U C T S - Not Used

PART 3 E X E C U T I O N

3.01 CONDUCTING TESTING

A Conform to laboratory sampling and testing methods specified in individual Specification sections to the latest issues of ASTM standards, TxDOT methods, or other recognized test standards as approved by Project Manager.

B Requirements of this Section shall also apply to those tests for approval of materials, for mix designs, and for quality control of materials as performed by employed testing laboratories.

END OF SECTION

Section 01502

MOBILIZATION

PART 1 G E N E R A L

1.01 SECTION INCLUDES

A. Mobilization of construction equipment and facilities onto the site.

1.02 MEASUREMENT AND PAYMENT

A. Unit Price Contracts. If Contract is Unit Price Contract, measurement for mobilization is on a lump sum basis.

B. Stipulated Price (Lump Sum) Contract. If Contract is Stipulated Price Contract, payment for Work in this Section is included in total Stipulated Price.

C. Mobilization payments will be included in monthly payment estimates upon written application by Contractor subject to the following provisions:

1. Authorization for payment of 50 percent of that portion of Contract Price designated for mobilization will be made upon receipt and approval by Project Manager of the following items, as applicable:

a. Safety Program (Document 00700, Paragraph 10.1.1).

b. Site Utilization Plan (Section 01145).

c. Schedule of Values (Section 01292), if any.

d. Initial Construction Photographs (Section 01321), if needed.

e. Preliminary Construction Schedule and Billing Forecast (Section 01325).

f. Construction Schedule (Section 01325 or Section 01326, as applicable).

g. Submittal Schedule (Section 01330).

h. Site specific Storm Water Pollution Prevention Plan (SWPPP) and Notice of Intent (NOI) along with storm water application fee (Section 01410), if required.

i. Contractor’s Quality Control Plan (Section 01450), if required.

j. Establishment of a Field Office for Project Manager meeting requirements of Section 01520 - Temporary Field Office.

k. Traffic Control Plan (Section 01555), if required.

l. Plan for Control of Ground and Surface Water (Section 01578), if required.

m. Project Signs Submittal (Section 01580).

n. Trench Safety Program (Section 02260), if required.

o. Dewatering plan, when required.

2. Authorization for payment of the balance of that portion of Contract Price designated for mobilization will be made upon completion of the Work amounting to five percent of Original Contract Price. The amount of Contract Price designated for mobilization may not be applied in computing whether or not five percent of the Original Contract Price has been obtained.

3. Mobilization payments will be subject to retainage amounts stipulated in Document 00700 – General Conditions.

PART 2 P R O D U C T S -Not Used

PART 3 E X E C U T I O N -Not Used

END OF SECTION

Section 01504

TEMPORARY FACILITIES AND CONTROLS

PART 1 G E N E R A L

1.01 SECTION INCLUDES

A. Temporary facilities and necessary controls for the Project, including utilities, telephone, sanitary facilities, storage sheds and building, safety requirements, first aid equipment, fire protection, security measures, protection of the Work and property, access roads and parking, environmental controls, pest and rodent control and disposal of trash, debris and excavated material.

B. Facilities and controls specified in this section are considered minimum for the Project. Provide additional facilities and controls for proper execution of the Work and to meet Contractor's responsibilities for protection of persons and property.

1.02 MEASUREMENT AND PAYMENT

A. UNIT PRICES

1. No separate payment will be made for any temporary facilities and controls required under this section. Include cost of such work in contract price listed for mobilization.

1.03 CONTRACTOR'S RESPONSIBILITY

A. Comply with applicable requirements specified in other sections of Specifications.

1. Maintain and operate temporary facilities and systems to assure continuous service.

2. Modify and extend systems as the Work progress requires.

3. Completely remove temporary materials and equipment when no longer required.

4. Restore existing facilities used for temporary services to specified or original condition.

PART 2 P R O D U C T S - NOT USED

PART 3 E X E C U T I O N

3.01 TEMPORARY UTILITIES

A. Obtaining Temporary Service:

1. Make arrangements with utility service companies for temporary services.

2. Abide by rules and regulations of the utility service companies or authorities having jurisdiction.

3. Be responsible for utility service costs until Date of Substantial Completion. Included are fuel, power, light, heat, and other utility services necessary for execution, completion, testing, and initial operation of work.

B. Water:

1. Provide water required for and in connection with work to be performed and for specified tests of piping, equipment, devices, or for other use as required for proper completion of the Work.

2. Water to be drawn from public fire hydrants. Obtain transit meter from City of Houston, Department of Public Works and Engineering, Taps and Meters Section. Pay required deposit based on rates established by latest ordinance.

3. Provide and maintain an adequate supply of potable water for domestic consumption by Contractor personnel, Project Manager and representatives of the City.

C. Electricity and lighting:

1. Provide electric power service required for the Work including required testing, lighting, operation of equipment, and other Contractor use.

2. Electric power service includes temporary power or generators required to maintain plant operations during scheduled shutdowns.

3. Minimum lighting level shall be 10 foot-candles for open areas; 20-foot-candles for stairs and shops. Provide a minimum of one 300-watt lamp for each 200 square feet of work area.

D. Temporary Heat and Ventilation:

1. Provide temporary heat necessary for protection or completion of the Work.

2. Provide temporary heat and ventilation to assure safe working conditions; maintain enclosed areas at a minimum of 50 degrees F.

E. Telephone:

1. Provide emergency telephone service at Project site for use by Contractor personnel and others performing work or furnishing services at the site.

2. Provide Houston-Metro lines, allowing unlimited calls, without charge in Greater Houston Metropolitan area with "call waiting" and "call forwarding" options. Provide one telephone answering machine with beeperless remote message retrieval capability.

F. Sanitary Facilities:

1. Provide and maintain sanitary facilities for persons on the site; comply with regulations of State and local departments of health.

2. Enforce use of sanitary facilities by construction personnel at site. Enclose sanitary facilities. Pit-type toilets are not permitted. No discharge will be allowed from these facilities. Collect and store sewage and waste so as not to cause nuisance or health problems. Haul sewage and waste off-site and properly dispose in accordance with applicable regulations.

3. Locate toilets near the Work site and secluded from view insofar as possible. Keep toilets clean and supplied throughout the course of the Work.

3.02 STORAGE SHEDS AND BUILDINGS

A. Provide adequately ventilated, watertight storage facilities with floor above ground level for Products susceptible to weather damage.

B. Storage of Products not susceptible to weather damage may be on blocks off the ground.

C. Store Products in a neat and orderly manner. Place Products to permit easy access for identification, inspection and inventory.

D. Fill and grade site for temporary structures to provide drainage away from temporary and existing buildings.

3.03 SAFETY REQUIREMENTS

A. Submit a safety program at the pre-construction meeting and follow the program in accordance with Document 00700 – General Conditions. Include documented response to trench safety requirements of Section 02260 - Trench Safety System.

B. Conduct operations in strict accordance with applicable Federal, State and local safety codes and statutes and with good construction practice. Establish and maintain procedures for safety of all work, personnel and equipment involved in the Work.

C. Observe and comply with Texas Occupational Safety Act (Art. 5182a, V.C.S.) and with all safety and health standards promulgated by Secretary of Labor under Section 107 of Contract Work Hours and Standards Act, published in 29 CFR Part 1926 and adopted by Secretary of Labor as occupational safety and health standards under Williams-Steiger Occupational Safety and Health Act of 1970, and to other legislation enacted for safety and health of Contractor employees. Safety and health standards apply to Subcontractors and Suppliers as well as to the Contractor.

D. Observance of and compliance with safety regulations is Contractor's responsibility without reliance or superintendence of or direction by Project Manager. Immediately advise Project Manager of investigation or inspection by Federal Safety and Health inspectors of Contractor's or Subcontractor's work or place of work on site under the Contract, and after investigation or inspection, advise Project Manager of results. Submit one copy of accident reports to Project Manager within 10 days of occurrence.

E. Protect areas occupied by workmen using the best available devices for detection of lethal and combustible gases. Test devices frequently to assure functional capability. Constantly observe infiltration of liquids into the Work area for visual or odor evidence of contamination, and immediately take appropriate steps to seal off entry of contaminated liquids to the Work area.

F. Implement safety measures, including but not limited to safety personnel, first-aid equipment, ventilating equipment and other safety equipment specified or detailed on Drawings.

G. Maintain required coordination with City Police and Fire Departments during entire period covered by the Contract.

H. Include Project safety analysis in safety plan. Itemize major tasks and potential safety hazards. Plan to eliminate hazards or protect workers and public from each hazard.

3.04 FIRST AID EQUIPMENT

A. Provide a first aid kit throughout the construction period. List telephone numbers for physicians, hospitals, and ambulance services in each first aid kit.

B. Have at least one person thoroughly trained in first aid and CPR procedures present on the site when work is in progress. Contractor to conform to protocols and requirements for training and protection against “blood borne pathogens”.

3.05 FIRE PROTECTION

A. Conform to specified fire protection and prevention requirements established by Federal, State, or local governmental agencies and as provided in Safety Program.

3.06 SECURITY MEASURES

A. Protect the Work, materials, equipment, and property from loss, theft, damage, or vandalism. Protect City property used in performance of the Contract.

B. If existing fencing or barriers are breached or removed for purposes of construction, provide and maintain temporary security fencing equal to existing.

3.07 PROTECTION OF UTILITIES AND PIPELINES

A. Prevent damage to existing public utilities during construction. Approximate locations of known utilities are shown on Drawings, but all lines may not be shown. Excavate with caution and repair lines damaged by construction operations.

B. Use the Utility Coordinating Committee One Call System, telephone number, (713) 223-4567, which must be called 48 hours in advance. The toll free telephone number is 1-800-669-8344, Texas One Call System.

C. Before excavating, locate underground utilities by appropriate means including the use of metal detection equipment, and probes, or by excavation or surveys. Repair damage caused by investigative work and by failure to locate or to preserve underground utilities.

D. Give utility owners a minimum five days notice before commencing excavation to allow time to locate utilities and make adjustments or

relocations when they conflict with the Work. Include cost for temporary relocation of water, wastewater, and storm drainage lines, necessary to accommodate construction, in unit prices for utility construction unless otherwise noted. Bypassing of sanitary waste to storm drainage facilities is not allowed.

E. Prior to excavation near pipelines, request a representative of the pipeline company to meet with Contractor and Project Manager at the site to discuss procedures to be used. Request pipeline company's representative to locate the pipelines in at least three locations: at each side and at centerline of proposed excavation of proposed utility. Also request representative and Project Manager to be present to observe Contractor operations when excavation is conducted within 15 feet of pipeline.

F. Utility service lines are not shown on the construction document drawings. Contractor should anticipate that such service lines exit and should exercise extreme caution during construction. The utility service lines should be repaired and restored immediately as per the specification, if damaged due to any construction activities. No separate payment will be made for this repair and restoration work. Include payment in unit price for work in appropriate sections.

G. Prior to abandonment of utility, make appropriate arrangements with City and owner of utility to terminate service, remove meters, tranformers, and poles as may be required by site conditions.

3.08 PROTECTION OF THE WORK AND PROPERTY

A. Preventive Actions

1. Take necessary precautions and actions to prevent damage, injury, or loss to the Work or public and private property, including:

a. Storage of apparatus, supplies, and Products in an orderly, safe manner to limit interference with progress of the Work or work of other contractors, utility service companies, or the City's operations.

b. Suitable storage for Products subject to damage by exposure to weather, theft, breakage, etc.

c. Limitation of loading pressures imposed upon portions of the Work.

d. Frequent clean up of refuse, scrap materials, and debris from construction operations, necessary to maintain the site in a safe and orderly condition.

e. Provision of barricades and guard rails to protect pedestrian and traffic around openings, scaffolding, temporary stairs and ramps, excavations, elevated walkways, and other hazardous areas.

2. Protect public and private property adjacent to the site. Obtain written consent before entering or occupying privately-owned land except on easements provided for construction. Restore property damaged by construction operations to condition equal to or better than that existing before the damage.

B. Barricades and Warning Systems

1. Where work is performed on or adjacent to roadways, rights-of-ways, or public land, provide barricades, fences, lights, warning signs, danger signals, and other precautionary measures necessary for protection of persons or property and for protection of the Work.

a. Erect sufficient barricades to keep vehicles and pedestrians from entering the Work. Paint barricades to be visible at night. From sunset to sunrise, provide at least one light at each barricade.

b. Maintain barricades, signs, lights, and provide watchmen until Project Manager approves removal. Whenever work creates encroachment onto public roadways, station flagmen to manage traffic flow in accordance with approved traffic control plan.

c. Conform to requirements of section 01555 – Traffic Control and regulation.

C. PROTECTION OF EXISTING STRUCTURES

1. Underground Facilities

a. Known Underground Facilities are shown on the Drawings but all Facilities may not be shown. Explore sufficiently ahead of trenching and excavation work to locate Underground Facilities in order to prevent damage to them and to prevent interruption of utility services. Restore damage to Underground Facilities to original condition at no additional cost to the City.

b. If necessary to avoid unanticipated Underground Facilities, Project Manager may make changes in location of the Work.

c. If permanent relocation of an Underground Facility is required

and not provided for in the Contract documents, City Engineer will direct Contractor in writing to perform the Work under Modification provisions in Document 00700 - General Conditions.

2. Surface Structures include buildings, tanks, walls, bridges, roads, dams, channels, open drainage, piping, poles, wires, posts, signs, markers, curbs, walks, guard cables, fencing, and other facilities that are visible above the ground level.

3. Protection of Underground Facilities and Surface Structures:

   a. Support in place and protect Underground Facilities and Surface Structures located within or adjacent to the limits of the Work from damage. Install supports as required by the owner of the structure. Satisfy Project Manager that the owner of the facility or structure has approved methods and procedures before installing structure supports.

   b. Avoid moving or changing public utility or private corporation property without prior written consent of a responsible official of the facility or structure. Allow representatives of utilities to enter the construction site for maintenance and repair purposes or to make necessary changes.

   c. Notify utility and pipeline owners and operators of the nature of construction operations and dates when operations will be performed. When construction operations are required in immediate vicinity of existing structures, pipelines, or utilities, give a minimum of five working days advance notice. Probe and flag location of Underground Facilities prior to commencement of excavation. Keep flags in place until construction operations uncover the facility.

   d. Assume risk for damages and expenses to Underground Facilities and Surface Structures within or adjacent to the Work.

D. Employ a structural engineer to ensure protection measures are adequate for the safety and integrity of structures and facilities.

E. PROTECTION OF INSTALLED PRODUCTS:

1. Provide protection of Installed Products to prevent damage from subsequent operations. Remove protection facilities when no longer needed, prior to completion of the Work.

2. Control traffic to prevent damage to Products and surfaces.

3. Provide coverings to protect Products from damage. Cover projections, wall corners, jambs, sills, and exposed sides of openings in areas used for traffic and passage of materials in subsequent work.

3.09 ROADS AND PARKING

A. Prevent interference with traffic and operations of the City on existing roads.

B. Designate temporary parking areas to accommodate construction and City personnel. When site space is not adequate, provide additional off-site parking. Locate as approved by Project Manager.

C. Minimize use by construction traffic on existing streets and driveways.

D. Do not allow heavy vehicles or construction equipment in existing parking areas.

3.10 ENVIRONMENTAL CONTROLS

A. Use methods, equipment, and temporary construction necessary for control of environmental conditions at the site and adjacent areas.

B. Comply with statutes, regulations, and ordinances relating to prevention of environmental pollution and preservation of natural resources including National Environmental Policy Act of 1969, PL 91-190, Executive Order 11514.

C. Minimize impact to the surrounding environment. Do not use construction procedures that cause unnecessary excavation and filling of terrain, indiscriminate destruction of vegetation, air or stream pollution, or harassment or destruction of wildlife.

D. Limit disturbed areas to boundaries established by the Contract. Do not pollute on-site streams, sewers, wells, or other water sources.

E. Do not burn rubbish, debris or waste materials.

3.11 POLLUTION CONTROL

A. Provide methods, means, and facilities necessary to prevent contamination of soil, water or the atmosphere by discharge of Pollutants from construction operations.

B. Provide equipment and personnel to perform emergency measures to contain spillage, and to remove contaminated soils or liquids. Excavate and dispose of contaminated earth off-site in accordance with laws and regulations, and

replace with suitable compacted fill and topsoil.

C. Provide systems necessary for control of Pollutants.

1. Prevent toxic concentrations of chemicals.

2. Prevent harmful dispersal of Pollutants into the environment.

D. Use equipment that conforms to current Federal, State, and local laws and regulations.

3.12 PEST AND RODENT CONTROL

A. Provide rodent and pest control as necessary to prevent infestation of construction or storage areas.

B. Employ methods and use materials that will not adversely affect conditions at site or on adjoining properties.

3.13 NOISE CONTROL

A. Provide vehicles, equipment, and use construction activities that minimize noise to the greatest degree practicable. Conform to noise levels of Chapter 30 –Noise and Sound Level Regulation, City Code of Ordinances, and latest OSHA standards. Do not permit noise levels to interfere with the Work or create a nuisance to surrounding areas.

B. Conduct construction operations during daylight hours except as approved by Project Manager.

C. Select construction equipment that operates with minimum noise and vibration. When directed by Project Manager, correct objectionable noise or vibration produced by operation of equipment at no additional cost to the City. Sound Power Level (PWL) of equipment shall not exceed 85 dbA (re: 10^{-12} watts) measured five feet from the equipment, or at a lower level if prescribed by City Ordinances. Equipment noise requirements are contained in equipment specifications.

3.14 DUST CONTROL

A. Use water or other methods approved by Project Manager to control amount of dust generated by vehicle and equipment operations.

3.15 WATER RUNOFF AND EROSION CONTROL

A. Comply with requirements of section 01410 – TPDES Requirements.

B. Conduct fill, grading and ditching operations and provide adequate methods necessary to control surface water, runoff, subsurface water, and water from excavations and structures in order to prevent damage to the Work, the site, or adjoining properties.

1. Plan and execute construction and earthwork by methods that control surface drainage from cuts and fills, and from borrow and waste disposal areas.

2. Minimize area of bare soil exposed at one time.

3. Provide temporary control measures, such as berms, dikes, and drains.

4. Provide, operate, and maintain equipment and facilities of adequate size to control surface water.

5. Construct fill and waste areas by selective placement of materials to eliminate erosion of surface silts or clays that may erode.

6. Direct water away from excavations, pits, tunnels, and other construction areas to prevent erosion, sedimentation or damage.

7. Maintain existing drainage patterns adjacent to the site by constructing temporary earth berms, sedimentation basins, retaining areas, and temporary ground cover.

8. Dispose of drainage water in a manner to prevent flooding, erosion, or other damage to the site or adjoining areas, in conformance with environmental requirements.

9. Inspect earthwork periodically to detect any evidence of erosion. Take corrective measures as required to control erosion.

END OF SECTION

Section 01506

DIVERSION PUMPING

PART 1 G E N E R A L

1.01 DEFINITIONS

A. Diversion-pumping: Installation and operation of bulkheads, plugs, hoses, piping, and pumps required to maintain sewer flow and prevent backups and overflows.

1.02 SYSTEM DESCRIPTION

A. Provides continuous sewer service to users of sewer systems while maintenance or construction operations are in progress, by diverting flow around construction locations. Maintain sewer flow to prevent backup or overflow onto streets, yards and unpaved areas or into buildings, adjacent ditches, storm sewers, and waterways. Do not divert sewage outside of sanitary sewer system.

B When pumps are operating, have an experienced operator on site to monitor operation, adjust pumps, make minor repairs to system, and report problems.

1.03 SUBMITTALS

A. Conform to requirements of Section 01330 - Submittals Procedures.

B. For systems that bypass sanitary sewer line segments of 42-inch diameter or larger, submit a Diversion Pumping Plan prior to installation. Show location, number and size of pumps, number, location, size and type of hoses or rigid piping, and location of downstream discharge; and special features where pipes or hoses cross roadways, temporary trenches, support bridges.

1.04 SCHEDULING

A. When the City operates or maintains diversion pumping in construction areas, coordinate construction activities with Project Manager.

B. Cease operation of diversion pumping when approved by Project Manager.

PART 2 P R O D U C T S

2.01 MATERIALS

A. Design piping, joints and accessories to withstand at least twice maximum system pressure or 50 psi, whichever is greater.

B. Use self-priming type or submersible electric pumps, with a working pressure gauge on the discharge. Pumps shall meet requirements of City of Houston Noise and Sound Level Regulations.

PART 3 E X E C U T I O N

3.01 FIELD QUALITY CONTROL

A. During diversion pumping, do not allow sewage to leak, dump, or spill into or onto areas outside of existing sanitary sewer systems.

B. In the event of an accidental spill or overflow, immediately stop discharge and take action to clean up and disinfect spill. Promptly notify Project Manager so required reporting can be made to the Texas Commission on Environmental Quality (TCEQ) and the Environmental Protection Agency (EPA).

3.02 CLEANING

A. When diversion-pumping operations are complete, drain sewage within piping into sanitary sewers prior to disassembly.

END OF SECTION

Section 01520

TEMPORARY FIELD OFFICE

PART 1 G E N E R A L

1.01 SECTION INCLUDES

A Temporary field office building and associated parking area.

1.02 FACILITY DESCRIPTION

A Temporary field office to be utilized by authorized representatives of the City to coordinate and monitor daily construction activities performed by Contractor.

B. Field office shall be a non-smoking facility.

PART 2 P R O DUCTS

2.01 FIELD OFFICE

A General:

1. Locate office in vicinity of the Work at a location approved by Project Manager or where indicated on Drawings.

2. Furnish, Install and maintain field office for exclusive use of authorized representatives of the City. Provide sufficient room for Project meetings and Inspector's office.

3. Provide office within 10 days of Date of Commencement of the Work.

4. Construct two all-weather, hard surfaced parking spaces for exclusive use of authorized representatives of the City. Provide all-weather surfaced walk between parking spaces and field office.

B. Minimum Construction:

1 Structurally sound foundation and superstructure.

Weather tight with insulated roof, walls and 7-foot ceiling (minimum).

3. Stairs or walkway with handrail and covered entrance platform (minimum 4 feet by 4 feet) with mud scraper at door.

4. Resilient floor covering.

5. Screened windows with area equal to approximately 10 percent of floor area sufficient for light, view of the site, and ventilation. Provide each window with operable sash and burglar bars.

6. Secure exterior doors with dead-bolt cylinder locks and burglar bars.

C. Minimum Services:

1. Exterior entrance light.

2. Interior lighting of 75 foot-candles minimum at desktop height

3. Automatic heating to maintain 65 degrees F in winter.

4. Automatic cooling to maintain 75 degrees F in summer.

5. Electric power service.

6. Three telephone service lines one for voice, one for data, and one for fax, for exclusive use of authorized representatives of the City.

7. Sanitary facilities in field office with one water closet, one lavatory, and one medicine cabinet for exclusive use of authorized representatives of the City.

D. Minimum Furnishings:

1. One 5-drawer desk

2. Two swivel desk chairs with casters.

3. One plan table.

4. One drawing plan rack.

5. One 4-drawer legal file cabinet complete with fifty legal-size hanging folders and two full-sized carriers.

6. One marker board with cleaner and markers.

7. Two waste baskets.

8. One 30-inch by 36-inch tack board.

9. One all-purpose fire extinguisher.

10. Six protective helmets (hard hats) with ratchet adjustment for exclusive use of authorized representatives of the City.

11. Conference table and chairs to accommodate 10 persons.

12. All in one printer, copier, plain paper fax machine.

13. Telephone instrument separate from fax machine.

E. Provide adequate space for one set of Contract documents for ready reference.

PART 3 E X E C U T I O N

3.01 MAINTENANCE

A Maintain all-weather surface driveway and parking areas, buildings, walkways, stairs and required furnishings and equipment for duration of the Contract.

B. Provide janitorial services for duration of the Contract consisting of twice weekly sweeping and mopping floors, trash removal, weekly restroom cleaning, and weekly dusting of furniture and equipment.

C. Provide soap, paper towels, toilet paper, cleansers and other necessary consumables.

D. Immediately repair damage, leaks or defective service.

3.02 PROJECT CLOSEOUT

A Remove temporary field office and signs and restore site as specified in Section 01770 - Closeout Procedures.

END OF SECTION

SECTION 01554

TRAFFIC CONTROL AND STREET SIGNS

PART 1 GENERAL

1.01 SECTION INCLUDES

A. Materials, hardware and installation of Traffic Signs.

1.02 SUBMITTALS

A. Contractor shall submit a list of intended suppliers and products to be used for all signs, posts, and associated hardware. City reserves the right to request actual product samples prior to approval.

1.03 MEASUREMENT AND PAYMENT

A. Signs installed or replaced will be measured by the each sign. Signs refurbished will be measured by each sign.

B. Payment for installation of traffic signs will be on the basis of each sign installed.

C. The price is full compensation for furnishing and installing new signs and hardware. Cost of associated posts, footings, and miscellaneous mounting hardware will not be paid for directly but is to be included in the unit price bid for installation of each traffic sign.

D. Non-standard signs installed or replaced will be measured by the square foot of the sign face. Non-standard signs shall not be installed without prior approval from the City.

PART 2 PRODUCTS

2.01 MATERIALS

A. The following ASTM Standards and documents, of the issue in effect on the date of Invitation for Bid, form a part of this specification to the extent herein.

1. ASTM B 209 Specification for Aluminum and Aluminum Alloy Sheet and Plate

2. ASTM D 523 Standard Method for Test for Specular Gloss

3. ASTM D 4956 Standard Specification for Retroreflective Sheeting for Traffic Control

4. ASTM E 284 Standard Definition of Terms Relating to Appearance of Materials

5. ASTM E 308 Computing the Colors of Objects by Using the CIE System

6. ASTM E 810 Standard Test Method for Coefficient of Retroreflection of Retroreflective Sheeting

7. ASTM E 1164 Standard Practice for Obtaining Spectrophotometric Data for Object-Color Evaluation

B. Substrate (Sign Blanks). This shall be aluminum alloy 5052-H38 and otherwise in conformance with ASTM B-209 and have gold chromate finish. The size, shape and thickness of the sign blanks are as indicated on the standard detail sheet in the plans or as specified by the Engineer.

1. Metal working. The aluminum shall be free of burrs and pits on both sides, including
edges and holes, and shall be made ready for applications of the sheeting.

2. Surface Preparation. The aluminum shall be thoroughly cleaned and degreased with solvent and alkaline emulsions cleaner by immersion, spray, or vapor degreasing and dried prior to application of the gold chromate sheeting coat. The aluminum shall be new and corrosion-free with holes drilled or punched, corners rounded to the radii shown in the standard detail sheet, and all edges smoothed prior to application of sheeting. The heavy or medium chromate coating shall conform in color and corrosion resistance to that imparted by the Alodine 1200F treatment.

3. Size. The dimensions of substrate applications for regulatory, warning, and guide signs shall be as specified by the Engineer and as shown on the plans.

C. Sign Face (Background, Legends, Symbols, and Colors). These shall be in accordance with the Standard Highway Sign Designs (SHSD) for Texas and with the Texas Manual of Uniform Traffic Control Devices (TMUTCD).

1. The sign face, made of electronic film and retro-reflective sheeting shall comply with the appearance, specification, and good workmanship designated by the using agency for sign faces constructed of screen processed retro-reflective sheeting of the same type.

2. All sign blanks shall be covered with appropriate retro-reflective sheeting.

   a. All ground mounted stop signs, warning signs, and other regulatory signs, shall use at a minimum High Intensity Prismatic Reflective Sheeting.

   b. All overhead signs shall use Diamond Grade Reflective Sheeting.

   c. All other signs shall use Super Engineer Grade Sheeting

3. Application Methods. The method of application of sheeting, letters, numbers, and symbols shall be precisely as prescribed in writing by the manufacturer.

   a. Legend Spacing and Layout. Spacing and layout for all traffic control signs shall conform to the SHSD.

   b. Tolerance for Horizontal Alignment. Letters, numerals, and symbols shall be horizontally aligned to a tolerance of 1/16 inch.

   c. Tolerance for Vertical Alignment. Letters, numerals, and symbols shall be vertically aligned to a tolerance of 1/16 on each letter in each line.

D. Sign Posts**.** Steel post shall conform to the standard specification for hot rolled carbon sheet steel, structural quality, ASTM designation A570, Grade 50. Average minimum yield strength after cold forming is 60,000 psi. The cross section of the post shall be square tube formed steel, carefully rolled to size and shall be welded directly in the corner by high frequency resistance welding or equivalent process and externally scarified to agree with corner radii. Sign posts shall be hot dipped galvanized conforming to ASTM A653, G90.

1. Installation. The square end of the post shall not be modified or pointed.

   a. Flange. When sign post installation is required over building basements, bridges and cavities, a galvanized cast iron pipe flange shall be used. The base shall be 8 inches in diameter with six 5/16 inch holes drilled equidistant around the circumference, ⅝ inch from the outer edge. The neck of the flange shall be 3inches in diameter, drilled and threaded to receive a 2 inch diameter galvanized post.

   b. Hardware. All ground mounted signs shall be attached to posts using 5/16” nut and bolt assembly, the bolt being 2 ½” in length. Stainless steel banding material, brackets and clips will be used for signs installed on light standards or mast arms.

c. Construction. Anchors shall be anchored in a minimum of one cubic foot of class “C” concrete, 28 inches deep, with a 6 inch long, ⅜ inch diameter pin inserted through the pre-drilled hole 3 inches from the bottom of the pole. Where the pole installation requires surface mounting, an 8 inch flange with a 2 inch threaded collar shall be used. The pole shall be galvanized, two inches in diameter and threaded to fit the flange. Sign placement and orientation shall be as specified in the construction plans.

E. Each finished sign shall have the following sticker affixed to the back in a location where it will be visible when the sign is installed:

The sticker shall be Zebra Technologies Z-Ultimate 3000 White or approved equal. Finished product shall be weather and fade resistant for the expected life of the sign.

F. Warranty. The Contractor shall warrant the materials and workmanship of each sign in accordance with the maximum limits of material warranties extended by manufacturers of raw materials, subject to the conditions they specify. The retro-reflective sheeting will be considered unsatisfactory if it has deteriorated due to natural causes to the extent that: (1) the sign is ineffective for its intended purpose when viewed from a moving vehicle under normal day and night driving conditions; or (2) the coefficient of retro-reflection is less than the minimum specified for that sheeting. When sign failure occurs prior to the minimum years indicated and an inspection demonstrates that the failure is caused by materials warranted to contractor to endure at least that long, the sign will be replaced or repaired free of materials charges. When failure occurs and inspection demonstrates that such failure is due to poor workmanship, the sign will be replaced or repaired at Contractor's expense, including shipping charges.

PART 3 EXECUTION

3.01.1 EQUIPMENT

A. The contractor shall provide machinery, tools, and equipment necessary for proper execution of the work.

3.01.2 CONSTRUCTION

A. Construction shall be high quality with no visible defects in the finished product. Fabrication shall be in accordance with these specifications. Street name signs shall always be supplied and installed at each project intersection whether signs previously existed at the location or not.

B. The removal of existing signs shall be coordinated with the Traffic Operations Section of the Public Works Department (713-803-3054) and arrangements made for a convenient time to deliver City signs and poles. All salvaged traffic signs shall be delivered to the Traffic Operations Center located at 2200 Patterson Street. All deliveries to the Traffic Operations Center requires a minimum notice of two (2) working days prior to returning or delivering any sign and/or sign related material.

3.03 RESPONSIBILITIES

A. The contractor is responsible for providing and supplying aluminum traffic signs covered with retro-reflective sheeting, applying standard legends (or special legends if shown in the plans) to the covered sign blanks, galvanized steel sign poles, pole anchors, all hardware for installing the signs and poles, and for installing traffic signs, poles and anchors as shown in the plans or call for in the contract documents, complete and ready for field installations.

END OF SECTION

Section 01555

TRAFFIC CONTROL AND REGULATION

PART 1 G E N E R A L

1.01 SECTION INCLUDES

A. Requirements for signs, signals, control devices, traffic barriers, flares, lights and traffic signals; construction parking control, designated haul routes, and bridging of trenches and excavations.

B. Qualifications and requirements for use of flagmen.

1.02 MEASUREMENT AND PAYMENT

A. Unit Price Contracts.

1. Traffic control and regulation. Payment for traffic control and regulation is on a lump sum basis. Include preparation and submittal of traffic control plan if different than shown on Drawings, and provision of traffic control devices, equipment, and personnel necessary to protect the Work and public. Payment will be based on Contractor's Schedule of Values for traffic control and regulation.

2. Payment for traffic control will be authorized by Project Manager in three (3) parts. Partial payment will be made according to following schedule:

a. Payment of 25 percent of traffic control amount will be authorized when permanent control devices and necessary temporary markings, sufficiently deployed along job site as required to maintain progress of work, are installed at job site and approved. This limiting percentage will be prorated based upon extent of Contractor's setup.

b. A payment of 50 percent of traffic control amount will be authorized when pavement replacement commences. This limiting percentage will be prorated based upon linear footage, as measured along centerline axis of water main, of pavement replaced.

c. A payment of 25 percent of traffic control amount will be authorized when permanent pavement markings are restored and all unnecessary permanent and temporary control devices removed. This limiting percentage will be prorated based upon the extent of restoration.

3. Flagmen: Measurement is on a lump sum basis for flagmen as required for the project. The amount invoiced shall be determined based on the schedule of value submitted for flagmen.

4. New Portable Concrete Low Profile Traffic Barrier Provided. Payment is on a unit price basis for each linear foot of low profile traffic barrier provided, installed with hardware assemblies and connected together in accordance with the approved traffic control plan.

5. Portable Concrete Low Profile Traffic Barrier picked up from City of Houston Stockpile. Payment is on a unit price basis for each linear foot of low profile traffic barrier picked up from designated stockpile, moved onto the project, set at location and connected together.

6. Portable Concrete Low Profile Traffic Barrier Installed. Payment is on a unit price basis for each linear foot of low profile traffic barrier delivered to the project location, installed with hardware assemblies and connected together in accordance with the approved traffic control plan.

7. Portable Concrete Low Profile Traffic Barrier Moved and Reset. Payment is on a unit price basis for each linear foot of low profile traffic barrier disassembled, moved on the project, reset at the new locations and connected together. Include cost to repair roadway in the unit price.

8. Portable Concrete Low Profile Traffic Barrier Removed. Payment is on a unit price basis for each linear foot of low profile traffic barrier removed from the project, including hardware assemblies, and stockpiling at location listed in Section 01110 – Summary of Work. Include cost to repair roadway in the unit price.

9. Refer to Section 01270 - Measurement and Payment for unit price procedures.

B. Stipulated Price Contracts. Include payment for work under this section in the total Stipulated Price.

1.03 REFERENCES

A. Texas Manual on Uniform Traffic Control Devices (TMUTCD)

B. Article 4413 (29bb), commonly referred to as Private Investigators and Private Security Agencies Act, and Article 2.12, Texas Code of Criminal Procedure.

C. Code of Ordinances, City of Houston, Texas.

1. Chapter 10 Buildings And Neighborhood Protection, Article X Cleanup After Demolition Or Removal Of Structures

2. Chapter 40 Streets and Sidewalks, Article XVII Pedestrian Way Impairments

1.04 SUBMITTALS

A. Conform to requirements of Section 01330 - Submittal Procedures.

B. Traffic control plan:

1. If using traffic control plan contained in the Contract without modification, submit a letter confirming use of the plan.

2. If using a different traffic control plan, submit the plan for approval. The plan must conform to TMUTCD requirements and be sealed by a Registered Texas Professional Engineer.

C. Submit copies of approved lane closure permits issued by City Traffic Engineering Branch.

D. Submit Schedules of Values for traffic control plan and flagmen within 30 days following Notice to Proceed.

E. Submit records verifying qualifications of Uniformed Peace Officers and Certified Flagmen proposed for use on the Work.

F. When working in the central business district, submit copies of approved Pedestrian Way permits issued by the City's Traffic Engineering Branch.

1.05 FLAGMEN

A. Use Uniformed Peace Officers and Certified Flagmen to control movement of vehicular and pedestrian traffic when construction operations encroach on public traffic lanes. Unless otherwise approved by Project Manager, use Uniformed Peace Officer for work along major thoroughfares, schools, churches, hospitals and Work at signalized intersections.

B. Uniformed Peace Officer: Individual employed full-time as a peace officer who receives separate compensation as a privately employed flagman. Private employment may be an employee-employer relationship or on an individual basis. Flagman may not be in the employ of another peace officer nor be a reserve peace officer.

1. Uniformed Peace Officers may be:

   a. sheriffs and their deputies;

   b. constables and deputy constables;

   c. marshals or police officers of an incorporated city, town or village; or

   d. as otherwise provided by Article 2.12, Code of Criminal Procedure.

2. The Uniformed Peace Officer must be a full-time peace officer, must work a minimum average of 32 paid hours per week, and must be paid a rate not less than the prevailing minimum hourly wage rate set by the federal Wage and Hour Act. The individual must be entitled to vacation, holidays, and insurance and retirement benefits.

C. Certified Flagman: Individual who receives compensation as a flagman and meets the following qualifications:

1. Formally trained and certified in traffic control procedures by the City s E. B. Cape Center.

2. Speaks English. Ability to speak Spanish is desirable but not required.

3. Paid for flagman duty at an hourly rate not less than the wage rate set for Rough Carpenter under the City's Wage Scale for Engineering Construction.

D. Certified Flagmen must wear a distinctive uniform, bright-colored vest, and be equipped with appropriate flagging and communication devices while at the Work site. They must also have in their possession while on duty, a proof of training identification card issued by the appropriate training institute.

PART 2 P R O D U C T S

2.01 SIGNS, SIGNALS, AND DEVICES

A. Comply with TMUTCD requirements.

B. Traffic cones and drums, flares and lights: Conform to local jurisdictions' requirements.

C. When working in the Central business district, provide pedestrian pathway

signage approved by the City's Traffic Engineering Branch.

2.02 PORTABLE LOW PROFILE CONCRETE BARRIERS

A. The low profile concrete barrier is a patented design. Information concerning this barrier may be obtained from Texas Transportation Institute, Texas A&M University System, College Station, Texas 77843-3135, (409) 845-1712.

PART 3 E X E C U T I O N

3.01 PUBLIC ROADS

A. Submit requests forms for lane closure and sidewalk closure to the City's Traffic Engineering Branch at least three working days prior to need for blocking vehicular lanes or sidewalks. Do not block lanes or sidewalks without approved permits. Obtain application from the City's Traffic Engineering Branch at 611 Walker, 5th floor or at the following internet address: http://www.ci.houston.tx.us/pwe/mrow/laneclosure.htm.

B. Follow laws and regulations of governing jurisdictions when using public roads. Pay for and obtain permits from jurisdiction before impeding traffic or closing lanes. Coordinate activities with Project Manager.

C. Give Project Manager one-week notice before implementing approved traffic control phases. Inform local businesses of impending traffic control activities.

D. Notified police department, fire department, METRO, and local schools, churches, and businesses in writing a minimum of five business days prior to beginning work.

E. Maintain 10-foot wide all-weather lanes adjacent to the Work for emergency vehicle use. Keep all-weather lanes free of construction equipment and debris.

F. Do not to obstruct normal flow of traffic from 7:00 a.m. to 9:00 a.m. and 4:00 p.m. to 6:00 p.m. on designated major arterials or as directed by Project Manager.

G. Maintain local driveway access to residential and commercial properties adjacent to work areas at all times. Use all-weather materials approved by Project Manager to maintain temporary driveway access to commercial and residential driveways.

H. Keep streets entering and leaving job site free of excavated material, debris, and foreign material resulting from construction operations in compliance with

applicable ordinances.

I. Remove existing signage and striping that conflict with construction activities or that may cause driver confusion.

J. Provide safe access for pedestrians along major cross streets.

K. Alternate closures of cross streets so that two adjacent cross streets are not closed simultaneously.

L. Do not close more than two consecutive esplanade openings at a time without prior approval from Project Manager.

3.02 CONSTRUCTION PARKING CONTROL

A. Control vehicular parking to prevent interference with public traffic and parking, access by emergency vehicles, and the City's operations.

B. Monitor parking of construction personnel's vehicles in existing facilities. Maintain vehicular access to and through parking areas.

C. Prevent parking on or adjacent to access roads or in non-designated areas.

3.03 FLARES AND LIGHTS

A. Provide flares and lights during hours of low visibility to delineate traffic lanes and to guide traffic.

3.04 HAUL ROUTS

A. Utilize haul routes designated by authorities or shown on drawings for construction traffic.

B. Confine construction traffic to designated haul routes.

C. Provide traffic control at critical areas of haul routes to regulate traffic and minimize interference with public traffic.

3.05 TRAFFIC SIGNS AND SIGNALS

A. Construct necessary traffic control devices for temporary signals required to complete the Work including loop detectors, traffic signal conduits, traffic signal wiring and crosswalk signals. Notify the City's Traffic Engineering Branch a minimum of 60 days in advance of need for control boxes and switchgear. The City will perform necessary service, programming or adjustments, to signal boxes and switchgear if required during construction.

B. Install and operate traffic control signals to direct and maintain orderly traffic flow in areas under Contractor's control affected by Contractor's operations. Post notices, signs and traffic controls before moving into next phase of traffic control.

C. Relocate traffic signs and signals as the Work progresses to maintain effective traffic control.

D. Unless otherwise approved by Project Manager, provide driveway signs with name of business that can be accessed from each crossover. Use two signs for each crossover.

E. Replace existing traffic control devices in Project area.

F. Project Manager may direct Contractor to make minor adjustments to traffic control signage to eliminate driver confusion and maintain orderly traffic flow during construction at no additional cost to the City.

3.06 BRIDGING TRENCHES AND EXCAVATIONS

A. When necessary, construct bridges over trenches and excavation to permit an unobstructed flow of traffic across construction areas and major drives. Use steel plates of sufficient thickness to support H-20 loading and install to operate with minimum noise.

B. Shore trench or excavation to support bridge and traffic.

C. Secure bridging against displacement with adjustable cleats, angles, bolts or other devices when:

1. bridging is placed over existing bus routes,

2. more than five percent of daily traffic is comprised of commercial or truck traffic,

3. more than two separate plates are used for bridging, and

4. when bridge is to be used for more than five consecutive days.

D. Extend steel plates used for bridging a minimum of 1 foot beyond edges of trench or excavation. Use temporary paving materials such as premix to feather edges of plates to minimize wheel impact on secured bridging.

3.07 REMOVAL

A. Remove equipment and devices when no longer required.

B. Repair damage caused by installation.

C. Remove post settings to a depth of 2 feet.

3.08 TRAFFIC CONTROL, REGULATION AND DIRECTION

A. Use Flagmen to control, regulate and direct an even flow and movement of vehicular and pedestrian traffic, for periods of time as may be required to provide for public safety and convenience, where:

1. multi-lane vehicular traffic must be diverted into single lane vehicular traffic,

2. vehicular traffic must change lanes abruptly,

3. construction equipment must enter or cross vehicular traffic lanes and walks,

4. construction equipment may intermittently encroach on vehicular traffic lanes and unprotected walks and crosswalk,

5. traffic regulation is needed due to rerouting of vehicular traffic around the Work site, and

6. where construction activities might affect public safety and convenience.

B. Use of Flagmen to assist in the regulation of traffic flow and movement does not relieve Contractor of responsibility to take other means necessary to protect the Work and public.

3.09 INSTALLATION STANDARDS

A. Place temporary pavement for single lane closures, in accordance with TMUTCD.

B. Reinstall temporary and permanent pavement markings as approved by Project Manager. When weather conditions do not allow application according to manufacturer's requirements, alternate markings may be considered. Submit proposed alternate to Project Manager for approval prior to installation. No additional payment will be made for use of alternate markings.

3.10 MAINTENANCE OF EQUIPMENT AND MATERIAL

A. Submit name, address and telephone number of individual designated to be

responsible for maintenance of traffic handling at construction site to Project Manager. Individual must be accessible at all times to immediately correct deficiencies in equipment and materials used to handle traffic including missing, damaged, or obscured signs, drums, barricades, or pavement markings.

B. Inspect signs, barricades, drums, lamps and temporary pavement markings daily to verify that they are visible, in good working order, and conform with traffic handling plans as approved by Project Manager. Immediately repair, clean, relocate, realign, or replace equipment or materials that are not in compliance.

C. Keep equipment and materials, signs and pavement markings, clean and free of dust, dirt, grime, oil, mud, or debris.

D. Obtain approval of Project Manager to reuse damaged or vandalized signs, drums, and barricades.

END OF SECTION

Section 01562

TREE AND PLANT PROTECTION

PART 1 G E N E R A L

1.01 SECTION INCLUDES

A. Tree and plant protection.

B. Minimum qualifications of Arborist and Urban Forester.

1.02 MEASUREMENT AND PAYMENT

A. Payment for Tree Protection, including tree pruning or tree removal, shall be paid as a Lump Sum basis that shall include all items specified in this section unless payment is specified otherwise in this section

B Payment for Zero Curb Cutback will be on a per linear foot basis.

C. Payment for Checker Plate will be on a square foot basis.

D. Refer to Section 01270-Measurement and Payment for unit price procedures.

1.03 SUBMITTALS

A. Conform to requirements of Section 01330 – Submittal Procedures.

B. Submit name and experience of qualified Arborist, proposed for use on the Work, to Project Manager.

1.04 PROJECT CONDITIONS

A. Preserve and protect existing trees and plants to remain from foliage, branch, trunk, or root damage that could result from construction operations.

B. Prevent following types of damage:

1. Compaction of root zone by foot or vehicular traffic, or material storage.

2. Trunk damage from equipment operations, material storage, or from nailing or bolting.

3. Trunk and branch damage caused by ropes or guy wires.

4. Root or soil contamination from spilled solvents, gasoline, paint, lime slurry, and other noxious materials.

5. Branch damage due to improper pruning or trimming.

6. Damage from lack of water due to:

   a. Cutting or altering natural water migration patterns near root zones.

   b. Failure to provide adequate watering

7. Damage from alteration of soil pH factor caused by depositing lime, concrete, plaster, or other base materials near roots zones.

8. Cutting of roots larger than one inch in diameter.

1.05 DAMAGE ASSESSMENT

A. When trees other than those designated for removal are destroyed or damaged as result of construction operations, remove and replace with same size, species, and variety up to and including 8 inches in trunk diameter. Trees larger than 8 inches in diameter shall be replaced with an 8 inch diameter tree of the same species and variety and total contract amount will be reduced by an amount determined from the following formula and paid to Tree Fund 0.7854 x D2 x $13.25 where D is diameter in inches of tree or shrub trunk measured 12 inches above grade for that portion of the tree which is greater than 8 inches in diameter. A permit must be applied for and approved by the City of Houston, Urban Forestry Division prior to removal of any tree not scheduled for removal in the tree treatment schedule. Contractor shall contact City of Houston, Urban Forestry, at 832-395-8459 to apply for tree removal permit when needed.

PART 2 P R O D U C T S

2.01 MATERIALS

A. Pruning Paint: Black latex, water based paint, free of all petroleum products.

B. Fertilizer: Fertilizer shall be a root stimulant that contains at a minimum the following ingredients: Ectomycorrhizal Fungi, VA Mycorrhizal (VAM) Fungi, Rhizosphere Bacillus spp., Kelp Meal Humic Acid, and Soluble Yucca.

C. Tree Protection Fencing: Orange, plastic mesh fenching, 4 feet in height with 6 feet high “t” bar posts installed 10 feet on centers as per drawings.

D. Plastic Root/Soil Protection: Clear polyethylene sheeting, minimum 6 mil, thickness.

PART 3 E X E C U T I O N

3.01 PROTECTION OF EXISTING TREES AND SHRUBS

A. Site preparation work and/or construction work shall not begin in any area where tree preservation measures have not been completed and approved.

B. Protect exposed roots and root zone areas from contamination from stabilization materials and concrete using polyethylene.

C. Cover exposed roots within 4 hours to reduce damage caused by desiccation. Roots may be covered with soil, mulch, polyethylene, or wet burlap to help protect them from drying.

D. Designate limited areas as concrete washout areas. Locate concrete washout areas away from root zones.

E. Install root pruning trenching where designated in tree treatment schedule and shown on the tree protection drawings. Trees scheduled for root pruning are called out specifically in the treatment schedule. Trench shall be located 2 ft. from the edge of proposed waterline or sanitary sewer for trees called out for root pruning for water or fittings, or sanitary sewer in the treatment schedule, 2 ft. from edge of proposed storm sewer pipe for trees called out for root pruning for storm in the treatment schedule, 30” back of proposed curb for trees called out for root pruning for street, and at edge of sidewalk for trees called out for root pruning for sidewalk. Root pruning shall not be performed where there is not adequate space to be located sufficiently away from tree to prevent damage. All pruning must be evaluated by Contractor’s Certified Arborist and reviewed and approved by City Forester before being performed. Trench locations shown on tree preservation plan are drawn to scale and should be located in field as drawn on plan. Exact locations shall be approved in the field by engineer and/or project urban forester prior to installation. Trenching depth shall be a minimum of 2 ft. deep and a maximum of 6 inches wide for water, fittings, sanitary sewer, storm, and street. Trenching depth shall be to the anticipated bottom of sidewalk and base material for sidewalk root pruning, roots lower than sidewalk shall not be pruned. All roots shall be cut by trencher, chainsaw, or handsaw to the specified depth. Roots shall be cut cleanly, and or not ripped, torn, or chopped. Trench shall be backfilled and compacted immediately after trenching. Trench shall be installed prior to any clearing and grubbing, excavation for underground, or any other site work.

F. Install tree protection fencing around each tree to be preserved as indicated in the tree treatment schedule and on the tree protection plan.

1. Each tree to be preserved shall be protected with a tree protection fence. The fencing shall be continuous between posts, shall be pulled taut prior to securing to posts, and shall be firmly attached to the posts with a minimum of 4 wire ties.

2. All tree protection fencing shall be installed prior to site work or construction activity. The fence shall be placed in a continuous alignment as shown on the tree protection plan. Fences shown on tree protection plan are drawn to scale and shall be installed as drawn, in the field. In general fences shall be placed 30” back of existing curb or edge of pavement where root pruning or zero curb cutback is not specified, and 6” back of root pruning trench where root pruning is specified and immediately back of curb where zero curb cutback is specified. Exact locations shall be approved by the project urban forester and/or engineer in the field. The Fences shall be placed to protect roots, trunks, and foliage. The contractor shall not remove or relocate tree protection fencing and shall not operate within the limits shown without direct approval of the project urban forester. In areas where the proposed waterline is located in the existing road side ditch and where tree protection fencing can not be installed across the ditch, the fencing shall be installed at the top of outside ditch bank and no bore pits, peep holes, service taps, or any excavation should occur in the area immediately in front of the tree protection fencing for trees called out with “bore” in the Tree Treatment Schedule. The “bore” limits shall be the same as the limits of the tree protection fencing.

3. Storage of equipment or materials will not be allowed inside a fence. Entryways and access into a protected area shall not be provided unless approved by the project urban forester.

4. Damage to tree fences occurring during the progress of the work shall be repaired immediately at no additional cost to owner. Workmen shall be clearly instructed to exercise caution in performance of work near trees being preserved.

5. Tree protection fencing shall be removed by contractor, at no additional costs, upon completion of all construction activity in each work zone area. Tree protection fencing materials used in the first two work zone areas shall be removed and utilized in subsequent work zone areas. Materials and labor shall be paid for each linear foot of fencing installed in first two work areas. All fencing installed in subsequent work zone areas shall be paid for labor only.

G. Boring/Auguring of water lines or sanitary sewer lines

1. Water line or sanitary sewer line shall be bored/augured/ horizontally drilled under

critical root zones areas of trees designated with auger or bore in the tree treatment schedule. The entire area protected with tree protection fencing shall be bored. No bore pits, come through holes, peep holes, push pits, or long or short side service taps shall be allowed in the areas protected by tree protection fencing. The tree protection plan takes into consideration the limits of augering equipment, there should be room for adequately spaced bore pits, peep holes, come through holes, and push pits. Any changes to the location of the tree protection fencing shall be authorized by the project Urban Forester and City Engineer.

H. Hand digging of Service taps and leads

1. Trees called out for Hand dig short side service tap are located in very close proximity to existing short side water meters. Excavating the service tap with machinery would significantly impact the tree and be in violation of the City of Houston's Street Tree Ordinance. These short side service taps shall be excavated with manual labor to expose any roots 1" in diameter and larger. The first 24" of excavation shall be completed manually to expose the roots. Any root 1" in diameter and larger shall remain undamaged, the roots shall not be cut , nor shall the bark and cambium layer be scraped or damaged. Once the roots are exposed, if there is adequate room to utilize a mini-excavator without damaging the roots, the mini-excavator can be utilized to complete the excavation down to the water line. 1" plywood shall be placed on grade to provide root protection in the area of access of the mini-excavator. If roots 1" diameter or larger are cut or damaged, responsible party will be subject to a citation under the Street Tree Ordinance, and may also be required to incur the cost of tree removal and replacement of damaged tree on an inch for inch basis, if required by City of Houston Urban Forestry Division.

2. Trees called out for Hand dig short side or long side service lead are located in very close proximity to existing water meters. Excavating the service lead with machinery would significantly impact the tree and be in violation of the City of Houston's Street Tree Ordinance. Short side leads shall be excavated with manual labor to expose any roots 1" in diameter and larger from the service tap of the meter. Come out hole and excavation required for long service leads shall be excavated with manual labor to expose roots 1" in diameter and larger, from the come out hole to the meter. In each case, all roots 1" in diameter and larger shall remain undamaged, the roots shall not be cut, nor shall the bark and cambium layer be scraped or damaged. If roots 1" diameter or larger are cut or damaged, responsible party will be subject to a citation under the cost of tree removal and replacement of damaged tree on an inch by inch basis, if required by City of Houston Urban Forestry Division.

3. Trees called out for Hand dig sanitary stub up are located in very close proximity to proposed service lead. Excavating the service lead with machinery would significantly impact the tree and be in violation of the City of Houston's Street Tree

Ordinance. Excavation for sanitary stub up shall be completed with manual labor to expose any roots 1” in diameter and larger. The lead shall be bored from face of curb to stub up hole when called out in the tree treatment schedule. Come out and stub up holes shall be excavated with manual labor to expose roots 1” in diameter and larger. In case, all roots 1” in diameter and larger shall remain undamaged, the roots shall not be cut, nor shall the bark and cambium layer be scraped or damaged. If roots 1” diameter or larger are cut or damaged, responsible party will be subject to a citation under the Street Tree Ordinance, and may be required to incur the cost of tree removal and replacement of damaged tree on an inch by inch basis, if required by City of Houston Urban Forestry Division.

4. Long side service taps shall not be located in an area specified to be bored in the tree treatment schedule. Should it be absolutely necessary to locate a long side service tap in an area specified to be bored, the excavation shall be completed as specified in paragraph 1 of this section-Hand digging short side service taps.
5. All water meters and sanitary service leads called out on P&P drawings and visible in the field have been addressed in the Tree Protection Plan. Should any additional meters or lead be found during construction, or in any new meters or leads installed beneath the canopy of any tree, fenced for tree protection, the excavation shall be completed as specified in paragraph 1 and/or 2 of this section and paid for at the unit cost for each included in contract.

I. Pruning of Trees

1. Trees shall be pruned in accordance with the American National Standard for tree pruning, ANSI A300 (Part 1) – 2001 Pruning Revision of ANSI A300-1995 Tree, Shrub and Other Woody Plant Maintenance – Standard Practices. Pruning shall be completed by professional arborists who has received training in proper pruning techniques.

2. Clearance prune designated trees for public streets, sidewalks, and construction areas. Provide minimum 14 feet and maximum of 18 feet of vertical clearance over proposed water trunk lines. Provide minimum of 14 feet and maximum of 16 feet of vertical clearance over proposed street construction, from 24” back of curb on one side to 24” back of curb on the other side. Provide 20’ of vertical clearance over proposed storm sewer up to 38” in size, and 30’ of vertical clearance for storm sewer larger than 38” in size. Pruning to be installed prior to any construction activity. Contractor shall notify property owner prior to trimming or pruning any trees with trunks located on private property. Exceptions will be made for trees determined to be arboriculturally significant by City of Houston Urban Forestry. Pruning of trees identified will be completed with approval and supervision of City of Houston Urban Forestry.

3. All cuts should be made sufficiently close to the parent limb or trunk without cutting into the branch collar or leaving a protruding stub, so that closure can readily start under normal conditions. All lateral cuts shall be made to a lateral that is least 1/3 the diameter of the parent limb. Clean cuts shall be made at all times.

4. Trees shall be pruned in a manner that will not destroy or alter the natural shape and character of the tree. Apply black latex paint to all fresh wounds on Oak (Quercus) species immediately after each cut is made.

5. Crown cleaning prune designated trees shall include selective removal of dead, diseased, and/or broken limbs.

J. Tree Removal

1. Trees scheduled for removal shall be sawed down and debris hauled from the site the same day. The stump shall be ground to 6” below grade and excess grindings shall be hauled from the site the same day, so that a pile of grindings is not left where the stump was ground. Enough grindings should be left so that an open hole does not remain.

2. Only those trees called out for removal in the Tree Treatment Schedule shall be removed, or otherwise damaged. Should it be determined that any additional trees must be removed, a permit must be applied for and approved from the City of Houston Urban Forestry Division prior to removal. Contractor shall contact Urban Forestry at 832-395-8459.

K. Root Stimulation

1. Deep root stimulate designated trees. Mix fertilizer with wetting agent per label instructions.

2. Stimulate entire root zone area within the dripline of the tree and continue 10 feet beyond the dripline, leaving out areas of anticipated root loss (construction areas).

3. Mixture shall be injected into the top 10 inches of soil under pressure of 150 to 200 psi as soil conditions warrant.

4. Mix in a tank with agitation capability per label instructions. Inject the mixture on a 2.5 ft. square grid at 4 lbs, actual nitrogen per 1,000 sq. ft.

L. Regularly water trees which have received root damage, to eliminate additional stress caused by lack of moisture. Water during periods without adequate rainfall. For example, should 1.0” of rain not be received within a week period, the trees should be thoroughly watered.

March through September, water once every two weeks. October through February, water every three weeks. Water thoroughly to saturate the entire root zone area.

M. Chemically treat tree trunks with evidence of borer activity with the appropriate approved insecticide mixed and applied per the manufacturer's product application recommendations. Trees shall be sprayed within 24 hours after observance of borer activity.

N. Grading and filling around trees.

1. Maintain existing grade within the dripline of trees, unless otherwise indicated.

2. Where existing grade around trees is above new finish grade, under supervision of project urban forester, carefully hand excavate within the dripline to make transition to new finish grade.

3. Where existing grade is below new finish grade, place clean bank sand in a single layer to make the transition to new grade. Do not compact; hand grade to required elevation. Specifically to areas where proposed curb is higher than existing and backfill will be required.

O. Demolition, Forming and Pouring Sidewalks (Sidewalk on Grade)

1. Demolition of existing sidewalks, located in or adjacent to the limits of tree protection fencing, shall be completed without disturbing, cutting, or otherwise damaging tree roots and soil located beneath them.

2. The new sidewalk shall be formed at or above the elevation of the existing sidewalk, without disturbing, cutting or otherwise damaging tree roots. Every effort has been made to address tree root and sidewalk elevation issues with information available in the field and on plan and profile sheets. The elevation of every tree root was not available, if tree roots are found to be in conflict with proposed sidewalk, project engineer and urban forester shall be consulted as to how to install sidewalks with minimal impacts to adjacent trees.

3. Checkerplate shall be installed in areas called out only if tree root elevations prohibit construction of ADA compliant sloped concrete sidewalks. Checkerplate shall be installed per detail.

P. Zero curb cutback

1. Disturbance of tree roots or soil behind the existing and/or proposed curb within root zones of trees designated for zero curb cutback shall be prohibited. If the curb can not be removed without disturbing soil or damaging roots back of curb when using

equipment for demolition, the curb shall be broken using a hand held jackhammer and removed by hand.

2. The exposed roots and soil shall be covered immediately after demolition with 6 mil polyethylene in order to avoid desiccation, and contamination by the lime used for road bed stabilization. The polyethylene shall be placed so that it covers the vertical face of soil back of curb and laid back onto the grade 12 inches back of curb. The polyethylene should remain in place, across the entire area specified for zero curb cutback, from the time the existing curb is demolished until the time when the new curb is formed and backfilled. The polyethylene can be pulled up from the vertical face while the road bed is being graded or mixed, to avoid catching the plastic with machinery, but shall be replaced immediately after equipment has completed. The vertical face shall not be exposed for more than 8 hours in any 24 hour period.

3. There shall be no stabilization back of curb in the zero curb cutback areas, or forming with steel forms. The existing grade and roots back of existing curb shall not be disturbed. This may require forming of the new street with wooden forms with stakes inside forms, which may require leaving the forms in place after the street is poured. Should wooden forms be utilized, the wood shall be at minimum a 2x6. The new curb may require hand finishing, as a slip curb machine may not have adequate clearance without disturbing the roots that are to be protected with the zero curb cutback.

4. Roots extending into the street, or on top of the existing curb, in areas to paved shall be cut and removed by hand prior to disturbance or removal with equipment. Roots shall be pruned flush with the proposed back of curb. Roots one inch in diameter and larger shall be cut in a manner to provide a smooth, clean cut surface. Cuts shall be made with the appropriate pruning shears or pruning saws. Roots shall not be chopped or broken.

5. In areas where proposed curb will be may be lower than existing top of curb and tree roots 2” diameter or larger are present, the soil and roots shall not be graded or laid back. The existing elevation shall be maintained and the curb formed to meet elevation or a short elevation difference roots and top of curb maintained.

Q. Demolition, Forming and Pouring of Drive Way Approaches

1. Demolition of existing driveway approaches located beneath the dripline of any tree shall be completed without disturbing, cutting, or otherwise damaging tree roots and soil located beneath them.

2. The new approach shall be formed at or above the elevation of the existing approach where tree roots 2” diameter or larger are present, without disturbing, cutting or

otherwise damaging tree roots. Maximum drive slopes may be needed at bottom of apron to allow forming of drive over tree roots at top of drive. As with sidewalks, the elevation of every tree roots was not available in design. If tree roots are found to be in conflict with proposed approach, project engineer and urban forester shall be consulted as to how to install drive way with minimal impacts to adjacent trees.

R. Replacement Trees for Tree Removals under Ordinance

1. Location, species, and size of replacement trees are indicated on the drawings. Contractor shall layout individual trees at locations shown on drawings. Contractor shall layout individual trees at locations shown on drawings and be responsible for utility locate requirements. In case of conflicts, notify City Engineer and City Urban Forestry before proceeding with work. Trees shall be laid out and locations approved by City Engineer prior to planting.

2. Trees shall meet and be planted according to City of Houston Standard Specification 02915.

S. Arborist and Urban Forester Qualifications

1. Arborist – Employ qualified arborist acceptable to City's Parks and Recreation Department to complete all tree treatments. Arborist shall be normally engaged in the field and have a minimum of 5 years experience. Qualifications of the selected arborist shall be submitted for review and approval by the project engineer and City of Houston.

2. Urban Forester – An Urban forester shall be hired to monitor and assist with field layout (exact locations of fencing, root pruning, and zero curb cutback) of the tree preservation program during demolition and construction to ensure tree protection procedures and techniques are practiced as specified to address concerns and conditions which occur in the field. At a minimum, the individual responsible for monitoring and field layout of the tree protection shall have a minimum of 5 years of experience as a consultant, and shall not be affiliated with a tree care contractor in the Houston area. Qualifications of the selected urban forester shall be submitted for review and approval by the project engineer and City of Houston Urban Forestry Department.

END OF SECTION

Section 01570

STORM WATER POLLUTION PREVENTION CONTROL

PART 1 G E N E R A L

1.01 SECTION INCLUDES

A. Implementation of Storm Water Pollution Prevention Plans (SWP3) described in Section 01410 – TPDES Requirement.

B. Installation, maintenance and removal, of storm water pollution prevention structures: diversion dikes, interceptor dikes, diversion swales, interceptor swales, down spout extenders, pipe slope drains, paved flumes and level spreaders. Structures are used during construction and prior to final development of the site.

C. Filter Fabric Barriers:

1. Type 1: Temporary filter fabric barrier for erosion and sediment control in non-channelized flow areas.

2. Type 2: Temporary reinforced filter fabric barrier for erosion and sediment control in channelized flow areas.

D. Hay Bale Fence.

E. Drop Inlet Basket

F. Inlet Sediment Traps

G. Brush Berm

H. Sand Bag Barrier

I. Bagged Gravel Barrier

J. Sediment Basin

K. Inlet Protection Barrier

1.02 MEASUREMENT AND PAYMENT

A. UNIT PRICES

1. Payment for filter fabric barrier is on a linear foot basis measured between limits of beginning and ending of stakes.

2. Payment for reinforced filter fabric barrier is on a linear foot basis measured between limits of beginning and ending of stakes.

3. Payment for drop inlet baskets is on a unit price basis for each drop inlet basket.

4. Payment for storm inlet sediment traps is on a unit price basis for each storm inlet sediment trap.

5. Payment for storm water pollution prevention structures is on a lump sum basis for the project. Earthen structures with outlet and piping include diversion dikes, interceptor dikes, diversion swales, interceptor swales, and excavated earth-outlet sediment trap, embankment earth-outlet sediment trap, down spout extenders, pipe slope drains, paved flumes, stone outlet sediment trap, and level spreaders.

6. Payment for hay bale barrier, if included in Document 00410 - Bid Form, is on a linear foot of accepted bale barriers, if not include in cost of storm water pollution prevention structures.

7. Payment for brush berm, if included in Document 00410 - Bid Form, is on a linear foot of accepted brush berm, if not include in cost of storm water pollution prevention structures.

8. Payment for sandbag barrier, if included in Document 00410 - Bid Form, is on a linear foot basis measured between limits of beginning and ending of sandbags, if not include in cost of storm water pollution prevention structures.

9. Payment for bagged gravel barrier, if included in Document 00410 - Bid Form, is on a linear foot basis measured between limits of beginning and ending of bagged gravel barrier, if not include in cost of storm water pollution prevention controls.

10. Payment for inlet protection barriers, if included in Document 00410 - Bid Form, is on a linear foot basis measured along outside face of inlet protection barrier, if not include in cost of storm water pollution prevention structures.

11. Refer to Section 01270 - Measurement and Payment for unit price procedures.

B. Stipulated Price (Lump Sum) Contract. If Contract is Stipulated Price Contract, payment for Work in this Section is included in total Stipulated

1.03 REFERENCE STANDARDS

A. ASTM

1. A 36 – Standard Specification for Carbon Structural Steel.

2. D698 – Standard Test Methods for Laboratory Compaction Characteristics of Soil Using Standard Effort (12,400 ft-lbf/ft3 (600kN-m/m3)).

3. D3786 – Standard Test Method for Hydraulic Bursting Strength for knitted Goods and Nonwoven Fabrics.

4. D 4355 - Standard Test Method for Deterioration of Geotextiles from Exposure to Ultraviolet Light and Water (Xenon-Arc Type Apparatus).

5. D 4491 - Standard Test Methods for Water Permeability of Geotextiles by Permittivity.

6. D 4632 - Standard Test Method for Grab Breaking Load and Elongation of Geotextiles.

7. D 4833 - Standard Test Method for Index Puncture Resistance of Geotextiles, Geomembranes, and Related Products.

8. D 6382 - Standard Practice for Dynamic Mechanical Analysis and Thermogravimetry of Roofing and Waterproofing Membrane Material.

B. Storm Water Management Handbook for Construction Activities prepared by City of Houston, Harris County and Harris County Flood Control District.

1.04 SYSTEM DESCRIPTIONS

A. Filter Fabric Barrier Type 1 and Type 2: Install to allow surface or channel runoff percolation through fabric in sheet-flow manner and to retain and accumulate sediment. Maintain Filter Fabric Barriers to remain in proper position and configuration at all times.

B. Hay Bale Fence: Install to allow surface runoff percolation through hay in sheet-flow manner and to retain and accumulate sediment. Maintain Hay Bale Fence to remain in proper position and configuration at all times.

C. Interceptor Dikes and Swales: Construct to direct surface or channel runoff around the project area or runoff from project area into sediment traps.

D. Drop Inlet Baskets: Install to allow runoff percolation through the basket and to retain and accumulate sediment. Clean accumulation of sediment to prevent clogging and backups.

E. Sediment Traps: Construct to pool surface runoff from construction area to allow sediment to settle onto the bottom of trap.

F. Sand Bags: Are used during construction activities in unstabilized minor swales, ditches, or streambeds when the contributing drainage area is no greater than 2 acres. It is also sediment barrier for stage one Inlet.

G. Bagged Gravel Barrier: Are used during construction activities in unstabilized minor swales, ditches, or streambeds when the contributing drainage area is no greater than 2 acres. It is also sediment barrier for stage two Inlet.

H. Drop Inlet Insert Basket: Is a temporary barrier placed within a storm drain inlet (Lower Portion of Stage I and Upper Portion of Stage II Inlets) consisting of a filter fabric supported by a metal frame work to prevent sediment and other pollutants from entering convey system.

I. Brush Berm: Brush Berm is constructed at the perimeter of a distribute site within the developing area.

1.05 SUBMITTALS

A. Conform to requirements of Section 01330 - Submittal Procedures.

B. Submit manufacturer's literature for product specifications and installation instructions.

C. Submit manufacturer=s catalog sheets and other product data on geotextile or filter fabrics, outlet pipe, perforated riser and connectors.

D. Submit proposed methods, equipment, materials, and sequence of operations for storm-water pollution prevention structures.

E. Submit shop drawings for Drop Inlet Baskets.

PART 2 P R O D U C T S

2.01 CONCRETE

A. Concrete: Class B in accordance with Section 03315 – Concrete for Utility Construction or as shown on the Drawings.

2.02 AGREGATE MATERIALS

A. Use poorly graded cobbles with diameter greater than 3 inches and less than 5 inches.

B. Provide gravel lining in accordance with Section 2320 – Utility Backfill Materials or as shown on the drawings.

C. Provide clean cobbles and gravel consisting of crushed concrete or stone. Use clean, hard crushed concrete or stone free from adherent coatings, salt, alkali, dirt, clay, loam, shale, soft or flaky materials, or organic matter.

D. Sediment Pump Pit Aggregate: Use nominal 2-inch diameter river gravel.

2.03 PIPE

A. Polyethylene culvert pipe or PVC sewer pipe in accordance with Section 02505- High Density Polyethylene (HDPE) Solid and Profile Wall Pipe and Section 02506 Polyvinyl Chloride Pipe or as shown on the Drawings.

B. Inlet Pipes: Galvanized steel pipe in accordance with Section 02642 Corrugated Metal Pipe or as shown on the Drawings.

C. Standpipe for Sediment Pump Pits: Galvanized round culvert pipe or round PVC pipe, minimum of 12-inch and a maximum of 24-inch diameter, perforate at 6 to 12 inch centers around circumference.

2.04 GEOTEXTILE FILTER FABRIC

A. Woven or nonwoven geotextile filter fabric made of either polypropylene, polyethylene, ethylene, or polyamide material, in continuous rolls of longest practical length.

B. Grab Strength: 100 psi in any principal direction (ASTM D-4632), Mullen burst strength >200 psi (ASTM D-3786), and equivalent opening size between 50 and 140.

C. Furnish ultraviolet inhibitors and stabilizers for minimum 6 months of expected usable construction life at temperature range of 0 degrees F to 120 degrees F.

D. Mirafi, Inc., Synthetic Industries, or equivalent

2.05 BARRIER

A. Wire Barrier: Woven galvanized steel wire, 14 gauge by 6-inch square mesh spacing, minimum 24 inch roll or sheet width of longest practical length.

B. Barrier Stakes: Nominal 2 by 2 inch moisture-resistant treated wood or steel posts (min. of 1.25 lbs. per linear foot and Brinell Hardness greater than 140) with safety caps on top; length as required for minimum 8 inch bury and full

height of filter fabric.

2.06 SANDBAGS

A. Provide woven material made of polypropylene, polyethylene, or polyamide material.

1. Minimum unit weight of four ounces per square yard.

2. Minimum grab strength of 100 lbs in any principal direction (ASTM D4632)

3. Mullen burst strength exceeding 300 lbs (ASTM D4833).

4. Ultraviolet stability exceeding 70 percent. After 500 hours of exposure (ASTM 4355).

5. Size: Length:18 to 24 inches. Width: 12 to 18 inches. Thickness: 6 to 8 inches. Weight: Approximately 40 to 50 pounds not to exceed 75 pounds.

2.07 Bagged gravel Barrier

1. Minimum unit weight of four ounces per square yard.

2. Minimum grab strength of 100 lbs in any principal direction (ASTM D4632)

3. Mullen burst strength exceeding 300 lbs (ASTM D4833).

4. Ultraviolet stability exceeding 70 percent. After 500 hours of exposure (ASTM 4355).

5. Size: Length:18 to 24 inches. Width: 12 to 18 inches. Thickness: 6 to 8 inches. Weight: Approximately 40 to 50 pounds not to exceed 75 pounds.

2.08 DROP INLET BASKET

A. Provide steel frame members in accordance with ASTM A36.

B. Construct top frame of basket with two short sides of 2 inch by 2 inch and single long side of 1 inch by 1 inch, 1/8 inch angle iron. Construct basket hangers of 2 inch by 1/4 inch iron bars. Construct bottom frame of 1 inch by 1/4 inch iron bar or 1/4 inch plate with center 3 inches removed. Use minimum 1/4 inch diameter iron rods or equivalent for sides of inlet basket.

Weld minimum of 14 rods in place between top frame/basket hanger and bottom frame. Exact dimensions for top frame and insert basket will be determined based on dimensions of type of inlet being protected.

2.09 HAY BALE

A. Hay: Standard-baled agricultural hay bound by wire, nylon, or polypropylene rope. Do not use jute or cotton binding.

B. Hay Bale Stakes (applicable where bales are on soil): No. 3 (3/8 diameter) reinforcing bars, deformed or smooth at Contractor's option, length as required for minimum 18 inch bury and full height bales.

PART 3 E X E C U T I O N

3.01 PREPARATION, INSTALLATION AND MAINTEINANCE

A. Provide erosion and sediment control structures at locations shown on the Drawings.

B. Do not clear, grub or rough cut until erosion and sediment control systems are in place unless approved by Project Manger to allow installation of erosion and sediment control systems, soil testing and surveying.

C. Maintain existing erosion and sediment control systems located within project site until acceptance of Project or until directed by Project Manger to remove and discard existing system.

D. Regularly inspect and repair or replace damaged components of erosion and sediment control structures. Unless otherwise directed, maintain erosion and sediment control structure until project area stabilization is accepted. . Redress and replace granular fill at outlets as needed to replenish depleted granular fill. Remove erosion and sediment control structures promptly when directed by Project Manger. Dispose of materials in accordance with Section 01576 - Waste Material Disposal.

E. Remove and dispose sediment deposits at the designated spoil site for the Project. If a project spoil site is not designated on Drawings, dispose of sediment off site at approved location in accordance with Section 01576 - Waste Material Disposal.

F. Unless otherwise shown on the Drawings, compact embankments, excavations, and trenches in accordance with Section 02315 Roadway

Excavation or Section 2317 Excavation and Backfill for Utilities.

G. Prohibit equipment and vehicles from maneuvering on areas outside of dedicated right of way and easements for construction. Immediately repair damage caused by construction traffic to erosion and sediment control structures.

H. Protect existing trees and plants in accordance with Section 1562 – Tree and Plant Protection.

3.02 SEDIMENT TRAPS

A. Install sediment traps so that surface runoff shall percolate through system in sheet flow fashion and allow retention and accumulation of sediment.

B. Inspect sediment traps after each rainfall, daily during periods of prolonged rainfall, and at a minimum once each week. Repair or replace damaged sections immediately.

C. Use fill material for embankment in accordance with Section 02320 – Utility Backfill Materials.

D. Excavation length and height shall be as specified on Drawings. Use side slopes of 2:1 or flatter.

E. Stone outlet sediment traps:

1. Maintain minimum of 6 inches between top of core material and top of stone outlet, minimum of 4 inches between bottom of core material and existing ground and minimum of 1 foot between top of stone outlet and top of embankment.

2. Embed cobbles minimum of 4 inches into existing ground for stone outlet. Core shall be minimum of 1 foot in height and in width and wrapped in triple layer of geotextile filter fabric.

F. Sediment Basin with Pipe Outlet Construction Methods: Install outlet pipe and riser as shown on the Drawings.

G. Remove sediment deposits when design basin volume is reduced by one-third or sediment level is one foot below principal spillway crest, whichever is less.

3.03 FILTER FABRIC BARRIER CONSTRUCTION METHODS

A. Fence Type 1: Filter Fabric: Barrier

1. Install stakes 3 feet on center maximum and firmly embed minimum 8 inches in soil. If filter fabric is factory preassembled with support netting, then maximum support spacing is 8 feet. Install wood stakes at a slight angle toward the source of anticipated runoff.

2. Trench in the toe of the fence lines so the downward face of the trenches is flat and perpendicular to direction of flow. V-trench configuration as shown on Drawings may also be used.

3. Lay fabric along edges of trenches in longest practical continuous runs to minimize joints. Make joints only at a support post. Splice with minimum 6-inch overlap and seal securely.

4. Staple filter fabric to stakes at maximum 3 inches on center. Extend fabric minimum 18 inches and maximum 36 inches above natural ground.

5. Backfill and compact trench.

B. Barrier Type 2: Reinforced Filter Fabric Barrier

1. Layout barrier same as for Type 1.

2. Install stakes at 6 feet on center maximum and at each joint in wire fence, firmly embedded 1-foot minimum, and inclined it as for Type 1.

3. Tie wire fence to stakes with wire at 6 inches on center maximum. Overlap joints minimum one bay of mesh.

4. Install trench same as for Type 1.

5. Fasten filter fabric wire fence with tie wires at 3 inches on center maximum.

6. Layout fabric same as for Type 1. Fasten to wire fence with wire ties at 3 inches on center maximum and, if applicable, to stakes above top of wire fence it as for Type 1.

7. Backfill and compact trench.

8. Attach filter fabric to wooden fence stakes spaced a maximum of 6 feet apart or steel fence stakes spaced a maximum of 8 feet apart and embedded a minimum of 12 inches. Install stakes at a slight angle toward source of anticipated runoff.

9. Trench in toe of filter fabric barrier with spade or mechanical trencher so that downward face of trench is flat and perpendicular to direction of flow. A V-trench configuration may also be used. Lay filter fabric along edges of trench. Backfill and compact trench upon completion of Construction.

10. Filter fabric fence shall have a minimum height of 18 inches and a maximum height of 36 inches above natural ground.

11. Cut length of fence to minimize use of joints. When joints are necessary, splice fabric together only at support post with minimum 6 inch overlap and seal securely.

12. When used in swales, ditches or diversions, elevation of barrier at top of filter fabric at flow line location in channel shall be lower than bottom elevation of filter fabric at ends of barrier or top of bank, whichever is less, in order to keep storm water discharge in channel from overtopping bank.

C. Triangular Filter Fabric Barrier Construction Methods

1. Attach filter fabric to wire fencing, 18 inches on each side. Provide a fabric cover and skirt with continuous wrapping of fabric. Skirt should form continuous extension of fabric on upstream side of fence.

2. Secure triangular fabric filter barrier in place using one of the following methods:
   a. Toe-in skirt 6 inches with mechanically compacted material;
   b. Weight down skirt with continuous layer of 3-inch to 5-inch graded rock; or
   c. Trench-in entire structure 4 inches.

3. Anchor triangular fabric filter barrier structure and skirt securely in place using 6-inch wire staples on 2-foot centers on both edges and on skirt, or staked using 18-inch by 3/8-inch diameter re-bar with tee ends.

4. Lap fabric filter material by 6 inches to cover segment joints. Fasten joints with galvanized shoat rings.

3.04 DIKE AND SWALE

A. Unless otherwise indicated, maintain minimum dike height of 18 inches, measured from cleared ground at up slope toe to top of dike. Maintain side slopes of 2:1 or flatter.

B. Dike and Swale Stabilization: When shown on the Drawings, place gravel lining 3 inches thick and compacted into the soil or 6 inches thick if truck crossing is expected. Extend gravel lining across bottom and up both sides of swale minimum height of 8 inches vertically, above bottom. Gravel lining on dike side shall extend up the up slope side of dike a minimum height of 8 inches, measured vertically from interface of existing or graded ground and up slope toe of dike, as shown on Drawings.

C. Divert flow from dikes and swales to sediment basins, stabilized outlets, or sediment trapping devices of types and at locations shown on Drawings. Grade dikes and swales as shown on Drawings, or, if not specified, provide positive drainage with maximum grade of 1 percent to outlet or basin.

D. Clear in accordance with Section 2233 – Clearing and Grubbing Compact embankments in accordance with Section 2315 – Roadway Excavation.

E. Carry out excavation for swale construction so that erosion and water pollution is minimal. Minimum depth shall be 1 foot and bottom width shall be 4 feet, with level swale bottom. Excavation slopes shall be 2:1 or flatter. Clear, grub and strip excavation area of vegetation and root material.

3.05 DOWN SPOUT EXTENDER

A. Down spout extender shall have slope of approximately 1 percent. Use pipe diameter of 4 inches or as shown on the Drawings. Place pipe in accordance with Section 2317 - Bedding and Backfill for Utilities.

3.06 PIPE SLOPE DRAIN

A. Compact soil around and under drain entrance section to top of embankment in lifts appropriately sized for method of compaction utilized.

B. Inlet pipe shall have slope of 1 percent or greater. Use pipe diameter as shown on the Drawings.

C. Top of embankment over inlet pipe and embankments directing water to pipe shall be at least 1 foot higher at all points than top of inlet pipe.

D. Pipe shall be secured with hold-down grommets spaced 10 feet on centers.

E. Place riprap apron with a depth equal to pipe diameter with 2:1 side slopes.

3.07 PAVED FLUME

A. Compact soil around and under the entrance section to top of the embankment in lifts appropriately sized for method of compaction utilized.

B. Construct subgrade to required elevations. Remove and replace soft sections and unsuitable material. Compact subgrade thoroughly and shape to a smooth, uniform surface.

C. Construct permanent paved flumes in accordance with Drawings.

D. Remove sediment from riprap apron when sediment has accumulated to depth of one foot.

3.08 LEVEL SPREADER

A. Construct level spreader on undisturbed soil and not on fill. Ensure that spreader lip is level for uniform spreading of storm runoff.

B. Maintain at required depth, grade, and cross section as specified on Drawings. Remove sediment deposits as well as projections or other irregularities which will impede normal flow.

3.09 INLET PROTECTION BARRIER

A. Place sandbags for Stage I, Bagged gravel for Stage II and filter fabric barriers at locations shown on the SWP3. Maintain to allow minimal inlet in flow restrictions / blockage during storm event.

3.10 DROP INLET BASKET CONSTRUCTION METHODS

A. Fit inlet insert basket into inlet without gaps around insert at locations shown on the SWP3.

B. Support for inlet insert basket shall consist of fabricated metal as shown on Drawings.

C. Push down and form filter fabric to shape of basket. Use sheet of fabric large enough to be supported by basket frame when holding sediment and extend at least 6 inches past frame. Place inlet grates over basket/frame to serve as fabric anchor.

D. Remove sediment deposit after each storm event and whenever accumulation exceeds 1-inch depth during weekly inspections.

3.11 HAY BALE FENCE CONSTRUCTION METHODS

A. Place bales in row with ends tightly abutting adjacent bales. Place bales with bindings parallel to ground surface.

B. Embed bale in soil a minimum of 4 inches.

C. Securely anchor bales in place with Hay Bale Stakes driven through bales a minimum of 18-inches into ground. Angle first stake in each bale toward previously laid bale to force bales together.

D. Fill gaps between bales with straw to prevent water from channeling between bales. Wedge carefully in order not to separate bales.

E. Replace with new hay bale fence every two months or as required by Project Manager.

3.12 BRUSH BERM CONSTRUCTION METHODS

A. Construct brush berm along contour lines by hand placing method. Do not use machine placement of brush berm.

B. Use woody brush and branches having diameter less than 2-inches with 6-inches overlap. Avoid incorporation of annual weeds and soil into brush berm.

C. Use minimum height of 18-inches measured from top of existing ground at upslope toe to top of berm. Top width shall be 24 inches minimum and side slopes shall be 2:1 or flatter.

D. Embed brush berm into soil a minimum of 4-inches and anchor using wire, nylon or polypropylene rope across berm with a minimum tension of 50 pounds. Tie rope securely to 18-inch x 3/8-inch diameter rebar stakes driven into ground on 4-foot centers on both sides of berm.

3.13 STREET AND SIDEWALK CLEANING

A. Keep areas clean of construction debris and mud carried by construction vehicles and equipment. If necessary, install stabilized construction exits at construction, staging, storage, and disposal areas, following Section 01575-Stabilized Construction Exit.

B. In lieu of or in addition to stabilized construction exits, shovel or sweep pavements as required to keep areas clean. Do not waterhose or sweep debris and mud off street into adjacent areas, except, hose sidewalks during off-peak hours, after sweeping.

3.14 WASTE COLLECTION AREAS

A. Prevent water runoff from passing through waste collection areas, and prevent water runoff from waste collection areas migrating outside collection areas.

3.15 EQUIPMENT MAINTENANCE AND REPAIR

A. Confine maintenance and repair of construction machinery and equipment to areas specifically designated for that purpose, so fuels, lubricants, solvents, and other potential pollutants are not washed directly into receiving streams or storm water conveyance systems. Provide these areas with adequate waste disposal receptacles for liquid and solid waste. Clean and inspect maintenance areas daily.

B. Where designated equipment maintenance areas are not feasible, take precautions during each individual repair or maintenance operation to prevent potential pollutants from washing into streams or conveyance systems. Provide temporary waste disposal receptacles.

3.16 VEHICLE/ EQUIPMENT WASHING AREAS

A. Install wash area (stabilized with coarse aggregate) adjacent to stabilized construction access, as required to prevent mud and dirt run-off. Release wash water into drainage swales or inlets protected by erosion and sediment controls. Build wash areas following Section 01575- Stabilized Construction access. Install gravel or rock base beneath wash areas.

B. Wash vehicles only at designated wash areas. Do not wash vehicles such as concrete delivery trucks or dump trucks and other construction equipment at locations where runoff flows directly into waterways or storm water conveyance systems.

C. Locate wash areas to spread out and evaporate or infiltrate wash water directly into ground, or collect runoff in temporary holding or seepage basins.

3.17 WATER RUNOFF AND EROSION CONTROL

A. Control surface water, runoff, subsurface water, and water from excavations and structures to prevent damage to the Work, the site, or adjoining properties. Follow environment requirements.

B. Control fill, grading and ditching to direct water away from excavations, pits, tunnels, and other construction areas, and to direct drainage to proper runoff courses to prevent erosion, sedimentation or damage.

C. Provide, operate, and maintain equipment and facilities of adequate size to control surface water.

D. Retain existing drainage patterns external to the site by constructing temporary earth berms, sedimentation basins, retaining areas, and temporary ground cover as required to control conditions.

E. Plan and execute construction and earth work to control surface drainage from cuts and fills, and from borrow and waste disposal areas, to prevent erosion and sedimentation.

1. Hold area of bare soil exposed at one time to a minimum.

2. Provide temporary controls such as berms, dikes, and drains.

F. Construct fill and waste areas by selective placement to eliminate surface silts or clays which will erode.

G. Inspect earthwork periodically to detect start of erosion. Immediately apply corrective measures as required to control erosion.

H. Dispose of sediments offsite, not in or adjacent to waterways or floodplains, nor allow sediments to flush into streams or drainage ways. Assume responsibility for offsite disposal location.

I. Unless otherwise indicated, compact embankments, excavations, and trenches by mechanically blading, tamping, and rolling soil in maximum of 8-inch layers. Provide compaction density at minimum 90 percent Standard Proctor ASTM D-698-78 density. Make at least one test per 500 cubic yards of embankment.

J. Prohibit equipment and vehicles from maneuver on areas outside of dedicated rights-of-way and easements for construction. Immediately repair damage to erosion and sedimentation control systems caused by construction traffic.

K. Do not damage existing trees intended to remain.

3.18 REMOVAL OF CONTROLS

A. Remove erosion and sediment controls when the site is finally stabilized or as directed by Project Manager.

B. Dispose of sediments and waste products following Section 01505-Temporary Facilities.

END OF SECTION

Section 01575

STABILIZED CONSTRUCTION ACCESS

PART 1 G E N E R A L

1.01 SECTION INCLUDES

A. Installation and removal of erosion and sediment control for stabilized construction access used during construction and prior to final development of site, as shown in City of Houston Standard Construction details, DWG No. 01571-01.

1.02 MEASUREMENT AND PAYMENT

A. Unit Price Contracts. If Contract is Unit Price Contract, payment for work in this Section will be based on the following:

1. Stabilized construction roads, parking areas, access and wash areas: per square yard of aggregate/recycled concrete without reinforcing placed in 8-inch layers. No separate payment will be made for street cleaning necessary to meet TPDES requirements. Include cost of work for street cleaning under related Specification section.

B. Stipulated Price (Lump Sum) Contracts. If the Contract is a Stipulated Price Contract, include payment for work under this Section in the total Stipulated Price.

1.03 SUBMITTALS

A. Conform to requirements of Section 01330 - Submittal Procedures.

B. Submit manufacturer-s catalog sheets and other Product Data on geotextile fabric.

C. Submit sieve analysis of aggregates conforming to requirements of this Specification.

1.04 REFERENCES

A. ASTM D 4632 - Standard Test Method for Grab Breaking Load and Elongation of Geotextiles.

B. Storm Water Quality Management Handbook For Construction Activities prepared by the City of Houston, Harris County and Harris County Flood Control District.

PART 2 P R O D U C T S

2.01 GEOTEXTILE FABRIC

A. Provide woven or non-woven geotextile fabric made of polypropylene, polyethylene, ethylene, or polyamide material.

B. Geotextile fabric: Minimum grab strength of 200 lbs in any principal direction (ASTM D-4632) and equivalent opening size between 50 and 140.

C. Geotextile and threads: Resistant to chemical attack, mildew, and rot and contain ultraviolet ray inhibitors and stabilizers to provide minimum of six months of expected usable life at temperature range of 0 to 120 degrees F.

D. Representative Manufacturers: Mirafi, Inc. or equal.

2.02 COARSE AGGREGATES

A. Coarse aggregate: Crushed stone, gravel, crushed blast furnace slag, or combination of these materials. Aggregate shall be composed of clean, hard, durable materials free from adherent coatings of, salt, alkali, dirt, clay, loam, shale, soft or flaky materials, or organic and injurious matter.

B. Coarse aggregates to consist of open graded rock 2” to 8” in size.

PART 3 EXECUTION

3.01 PREPARATION AND INSTALLATION

A. Provide stabilized construction roads and access at construction, staging, parking, storage,
and disposal areas to keep street clean of mud carried by construction vehicles and equipment. Construct erosion and sediment controls in accordance with Drawings and Specification requirements.

B. Do not clear grub or rough cut until erosion and sediment control systems are in place, unless approved by Project Manager to allow soil testing and surveying.

C. Maintain existing construction site erosion and sediment control systems until acceptance of the Work or until removal of existing systems is approved by Project Manager.

D. Regularly inspect, repair or replace components of stabilized construction access. Unless otherwise directed, maintain stabilized construction roads and

access until the City accepts the Work. Remove stabilized construction roads and access promptly when directed by Project Manager. Discard removed materials off-site.

E. Remove and dispose of sediment deposits at designated spoil site for Project. If a spoil site is not designated on Drawings, dispose of sediment off-site at a location not in or adjacent to stream or flood plain. Assume responsibility for off-site disposal.

F. Spread compacted and stabilized sediment evenly throughout site. Do not allow sediment to flush into streams or drainage ways. Dispose of contaminated sediment in accordance with existing federal, state, and local rules and regulations.

G. Prohibit equipment and vehicles from maneuvering on areas outside of dedicated rights-of-way and easements for construction. Immediately repair damage to erosion and sediment control systems caused by construction traffic.

H. Conduct construction operations in conformance with erosion control requirements of Specification 01570 – Storm Water Pollution Control.

3.02 CONSTRUCTION MAINTENANCE

A. Provide stabilized access roads, subdivision roads, parking areas, and other on-site vehicle transportation routes where shown on Drawings.

B. Provide stabilized construction access and vehicle washing areas, when approved by Project Manager, of sizes and at locations shown on Drawings or as specified in this Section.

C. Clean tires to remove sediment on vehicles leaving construction areas prior to entering public right-of-ways. Construct wash areas needed to remove sediment. Release wash water into drainage swales or inlets protected by erosion and sediment control measures.

D. Details for stabilized construction access are shown on Drawings. Construct other stabilized areas to same requirements. Maintain minimum roadway widths of 14 feet for one-way traffic and 20 feet for two-way traffic and of sufficient width to allow ingress and egress. Place geotextile fabric as a permeable separator to prevent mixing of coarse aggregate with underlaying soil. Limit exposure of geotextile fabric to elements between laydown and cover to a maximum 14 days to minimize potential damage.

E. Grade roads and parking areas to provide sufficient drainage away from stabilized areas. Use sandbags, gravel, boards, or similar materials to prevent sediment from entering public right-of-ways, waterways or

storm water conveyance systems.

F. Inspect and maintain stabilized areas daily. Provide periodic top dressing with additional coarse aggregates to maintain required depth. Repair and clean out damaged control systems used to trap sediment. Immediately remove spilled, dropped, washed, or tracked sediment from public right-of-ways.

G. Maintain lengths of stabilized areas as shown on Drawings or a minimum of 50 feet. Maintain a minimum thickness of 8 inches. Maintain minimum widths at all points of ingress or egress.

H. Stabilize other areas with the same thickness, and width of coarse aggregate required for stabilized construction access, except where shown otherwise on Drawings.

I. Stabilized areas may be widened or lengthened to accommodate truck washing areas when authorized by Project Manager.

J. Clean street daily before end of workday. When excess sediments have tracked onto streets, Project Manager may direct Contractor to clean street as often as necessary. Remove and legally dispose of sediments.

K. Use other erosion and sediment control measures to prevent sediment runoff during rain periods and non-working hours and when storm discharges are expected.

END OF SECTION

Section 01576

WASTE MATERIAL DISPOSAL

PART 1 G E N E R A L

1.01 SECTION INCLUDES

A. Disposal of waste material and salvageable material.

1.02 SUBMITTALS

A. Conform to requirements of Section 01330 - Submittal Procedures.

B. Submit copy of approved "Development Permit", as defined in Chapter 19 of Flood Plain Ordinance (City Ordinance Number 81-914 and Number 85-1705), prior to disposal of excess material in areas designated as being in "100-year Flood Hazard Area" within the City. Contact the City of Houston Flood Plain Manager, 3300 Main Street, at (713) 525-7605 for flood plain information.

C. Obtain and submit disposal permits for proposed disposal sites, if required by local ordinances.

D. Submit copy of written permission from property owner, with description of property, prior to disposal of excess material adjacent to Project. Submit written and signed release from property owner upon completion of disposal work.

E. Describe waste materials expected to be stored on-site and a description of controls to reduce Pollutants from these materials, including storage practices to minimize exposure of materials to storm water; and spill prevention and response measures in the Project's Storm Water Pollution Prevention Plan (SWPPP). Refer to Section 01410 – TPDES Requirements.

PART 2 P R O D U C T S - Not Used

PART 3 E X E C U T I O N

3.01 SALVAGEABLE MATERIAL

A. Excavated Material: When indicated on Drawings, load, haul, and deposit excavated material at location or locations shown on Drawings outside limits of Project.

B. Base, Surface, and Bedding Material: Load shell, gravel, bituminous, or other base and surfacing material designated for salvage into City trucks.

C. Pipe Culvert: Load culverts designated for salvage into City trucks.

D. Other Salvageable Materials: Conform to requirements of individual Specification Sections.

E. Coordinate loading of salvageable material on City trucks with Project Manager.

3.02 EXCESS MATERIAL

A. Remove and legally dispose of vegetation, rubble, broken concrete, debris, asphaltic concrete pavement, excess soil, and other materials not designated for salvage from job site.

B. Excess soil may be deposited on private property adjacent to Project when written permission is obtained from property owner. See Paragraph 1.02 D above.

C. Verify flood plain status of any proposed disposal site. Do not dispose of excavated materials in area designated as within 100-year Flood Hazard Area unless “Development Permit” has been obtained. Remove excess material placed in "100-year Flood Hazard Area" within the City, without “Development Permit", at no additional cost to the City.

D. Remove waste materials from site daily, in order to maintain site in neat and orderly condition.

END OF SECTION

Section 01578

CONTROL OF GROUND AND SURFACE WATER

PART 1 G E N E R A L

1.01 SECTION INCLUDES

A. Dewatering, depressurizing, draining, and maintaining trenches, shaft excavations, structural excavations and foundation beds in stable condition, and controlling ground water conditions for tunnel excavations.

B. Protecting work against surface runoff and rising floodwaters.

C. Trapping suspended sediment in the discharge form the surface and ground water control systems.

1.02 MEASUREMENT AND PAYMENT

A. UNIT PRICES

1. When noted, dewatering of trench or excavation during course of project shall be measured per linear foot and paid for at contract unit prices for dewatering, when directed to perform such work by Project Manager. Dewatering must be fully detailed in submittal and submittal must be approved prior to performing dewatering work before payment will be made for dewatering. No payment will be made for work unless directed to perform work by Project Manager.

2. Presence of a pump on project does not constitute dewatering for payment under bid item "Ground Water Control for Open Cut Construction."

3. Dewatering required during course of project to lower water table for other utility installation less than 24 inches in diameter, construction of structures, removal of standing water, surface drainage seepage, or to protect against rising waters or floods shall be considered incidental to Work unless otherwise noted.

4. No separate payment will be made for groundwater control associated with augering, tunnels or casing. Include cost in unit price for augering.

5. Refer to Section 01270 - Measurement and Payment for unit price procedures.

B. Stipulated Price (Lump Sum) Contract. If the Contract is a Stipulated Price Contract, include payment for work under this section in the total Stipulated

Price.

1.03 REFERENCES

A. ASTM D 698 - Standard Test Methods for Laboratory Compaction of Soils Using Standard Effort (12,400 ft-lbf/ft3 (600kN-m/m3)

B. Federal Regulations, 29 CFR Part 1926, Standards-Excavation, Occupational Safety and Health Administration (OSHA)

C. Storm Water Management Handbook for Construction Activities prepared by City of Houston, Harris County and Harris County Flood Control District.

1.04 DEFINITIONS

A. Ground water control system: system used to dewater and depressurize water-bearing soil layers.

1. Dewatering: lowering the water table and intercepting seepage that would otherwise emerge from slopes or bottoms of excavations, or into tunnels and shafts; and disposing of removed water. Intent of dewatering is to increase stability of tunnel excavations and excavated slopes, prevent dislocation of material from slopes or bottoms of excavations, reduce lateral loads on sheeting and bracing, improve excavating and hauling characteristics of excavated material, prevent failure or heaving of bottom of excavations, and to provide suitable conditions for placement of backfill materials and construction of structures and other installations.

2. Depressurization: includes reduction in piezometric pressure within strata not controlled by dewatering alone, necessary to prevent failure or heaving of excavation bottom or instability of tunnel excavations.

B. Excavation drainage: includes keeping excavations free of surface and seepage water.

C. Surface drainage: includes use of temporary drainage ditches and dikes and installation of temporary culverts and sump pumps with discharge lines necessary to protect Work from any source of surface water.

D. Monitoring facilities for ground water control system: includes piezometers, monitoring wells and flow meters for observing and recording flow rates.

1.05 PERFORMANCE REQUIREMENTS

A. Conduct subsurface investigations to identify groundwater conditions and to

provide parameters for design, installation, and operation of groundwater control systems. Submit proposed method and spacing of readings for review prior to obtaining water level readings.

B. Design ground water control system, compatible with requirements of Federal Regulations 29 CFR Part 1926 and Section 02260 - Trench Safety Systems, to produce following results:

1. Effectively reduce hydrostatic pressure affecting:

   a. Excavations

   b. Tunnel excavation, face stability or seepage into tunnels

2. Develop substantially dry and stable subgrade for subsequent construction operations

3. Preclude damage to adjacent properties, buildings, structures, utilities, installed facilities and other work

4. Prevent loss of fines, seepage, boils, quick condition, or softening of foundation strata

5. Maintain stability of sides and bottom of excavations

C. Provide ground water control systems that include single-stage or multiple-stage well point systems, eductor and ejector-type systems, deep wells, or combinations of these equipment types.

D. Provide drainage of seepage water and surface water, as well as water from other sources entering excavation. Excavation drainage may include placement of drainage materials, crushed stone and filter fabric, together with sump pumping.

E. Provide ditches, berms, pumps and other methods necessary to divert and drain surface water from excavation and other work areas.

F. Locate ground water control and drainage systems so as not to interfere with utilities, construction operations, adjacent properties, or adjacent water wells.

G. Assume sole responsibility for ground water control systems and for any loss or damage resulting from partial or complete failure of protective measures and settlement or resultant damage caused by ground water control operations. Modify ground water control systems or operations if they cause or threaten to cause damage to new construction, existing site improvements, adjacent property, adjacent water wells, or potentially contaminated areas. Repair damage caused by ground water control systems or resulting from

failure of system to protect property as required.

H. Install an adequate number of piezometers installed at proper locations and depths, necessary to provide meaningful observations of conditions affecting excavation, adjacent structures and water wells.

I. Install environmental monitoring wells at proper locations and depths necessary to provide adequate observations of hydrostatic conditions and possible contaminant transport from contamination sources into work area or ground water control system.

1.06 SUBMITTALS

A. Conform to requirements of Section 01330 - Submittals Procedures.

B. Submit Ground Water and Surface Water Control Plan for review by Project Manager prior to start of excavation work. Include the following:

1. Results of subsurface investigations and description of extent and characteristics of water bearing layers subject to ground water control

2. Names of equipment Suppliers and installation Subcontractors

3. Description of proposed ground water control systems indicating arrangement, location, depth and capacities of system components, installation details and criteria and operation and maintenance procedures

4. Description of proposed monitoring facilities indicating depths and locations of piezometers and monitoring wells, monitoring installation details and criteria, type of equipment and instrumentation with pertinent data and characteristics

5. Description of proposed filters including types, sizes, capacities and manufacturer's application recommendations

6. Design calculations demonstrating adequacy of proposed systems for intended applications. Define potential area of influence of ground water control operation near contaminated areas.

7. Operating requirements, including piezometric control elevations for dewatering and depressurization

8. Excavation drainage methods including typical drainage layers, sump pump application and other means

9. Surface water control and drainage installations

10. Proposed methods and locations for disposing of removed water

C. Submit following records upon completion of initial installation:

1. Installation and development reports for well points, eductors, and deep wells

2. Installation reports and baseline readings for piezometers and monitoring wells

3. Baseline analytical test data of water from monitoring wells

4. Initial flow rates

D. Submit the following records weekly during control of ground and surface water operations:

1. Records of flow rates and piezometric elevations obtained during monitoring of dewatering and depressurization. Refer to Paragraph 3.02, Requirements for Eductor, Well Points, or Deep Wells.

2. Maintenance records for ground water control installations, piezometers and monitoring wells

1.07 ENVIRONMENTAL REQUIREMENTS

A. Comply with requirements of agencies having jurisdiction.

B. Comply with Texas Commission on Environmental Quality regulations and Texas Water Well Drillers Association for development, drilling, and abandonment of wells used in dewatering system.

C. Obtain necessary permits from agencies with jurisdiction over use of groundwater and matters affecting well installation, water discharge, and use of existing storm drains and natural water sources. Since review and permitting process may be lengthy, take early action to obtain required approvals.

D. Monitor ground water discharge for contamination while performing pumping in vicinity of potentially contaminated sites.

PART 2 P R O D U C T S

2.01 EQUIPMENT AND MATERIALS

A. Select equipment and materials necessary to achieve desired results for dewatering. Selected equipment and materials are subject to review by Project Manager through submittals required in Paragraph 1.06, Submittals.

B. Use experienced contractors, regularly engaged in ground water control system design, installation, and operation, to furnish and install and operate educators, well points, or deep wells, when needed

C. Maintain equipment in good repair and operating condition.

D. Keep sufficient standby equipment and materials available to ensure continuous operation, where required.

E. Portable Sediment Tank System: Standard 55-gallon steel or plastic drums, free of hazardous material contamination.

1. Shop or field fabricate tanks in series with main inlet pipe, inter-tank pipes and discharge pipes, using quantities sufficient to collect sediments from discharge water.

PART 3 E X E C U T I O N

3.01 GROUND WATER CONTROL

A. Perform necessary subsurface investigation to identify water bearing layers, piezometric pressures and soil parameters for design and installation of ground water control systems. Perform pump tests, if necessary to determine draw down characteristics. Present results in the Ground Water and Surface Water Control Plan. submittal

B. Provide labor, material, equipment, techniques and methods to lower, control and handle ground water in manner compatible with construction methods and site conditions. Monitor effectiveness of installed system and its effect on adjacent property.

C. Install, operate, and maintain ground water control systems in accordance with the Ground Water and Surface Water Control Plan. Notify Project Manager in writing of changes made to accommodate field conditions and changes to Work. Provide revised drawings and calculations with notification.

D. Provide continuous system operation, including nights, weekends, and holidays. Arrange appropriate backup if electrical power is primary energy source for dewatering system.

E. Monitor operations to verify systems lower ground water piezometric levels at rate required to maintain dry excavation resulting in stable subgrade for

subsequent construction operations.

F. Depressurize zones where hydrostatic pressures in confined water bearing layers exist below excavations to eliminate risk of uplift or other instability of excavation or installed works. Define allowable piezometric elevations in the Ground Water and Surface Water Control Plan.

G. Removal of ground water control installations.

1. Remove pumping system components and piping when ground water control is no longer required.

2. Remove piezometers, including piezometers installed during design phase investigations and left for Contractor's use, upon completion of testing, as required in accordance with Part 3 of applicable specification.

3. Remove monitoring wells when directed by Project Manager.

4. Grout abandoned well and piezometer holes. Fill piping that is not removed with cement-bentonite grout or cement-sand grout.

H. During backfilling, maintain water level a minimum of 5 feet below prevailing level of backfill. Do not allow the water level to cause uplift pressures in excess of 80 percent of downward pressure produced by weight of structure or backfill in place. Do not allow water levels to rise into cement-stabilized sand until at least 48 hour after placement.

I. Provide uniform pipe diameter for each pipe drain run constructed for dewatering. Remove pipe drains when no longer required. If pipe removal is impractical, grout connections at 50-foot intervals and fill pipe with cement-bentonite grout or cement-sand grout after removal from service.

J. The extent of ground water control for structures with permanent perforated underground drainage systems may be reduced, for units designed to withstand hydrostatic uplift pressure. Provide a means to drain affected portions of underground systems, including standby equipment. Maintain drainage systems during construction operations.

K. Remove systems upon completion of construction or when dewatering and control of surface or ground water is no longer required.

L. Compact backfill to not less than 95 percent of maximum dry density in accordance with ASTM D 698.

M. Foundation Slab: Maintain saturation line at least 3 feet below lowest elevations where concrete is to be placed. Drain foundations in areas where

concrete is to be placed before placing reinforcing steel. Keep free from water for 3 days after concrete is placed.

3.02 REQUIREMENTS FOR EDUCTOR, WELL POINTS, OR DEEP WELLS

A. For aboveground piping in ground water control system, include a 12-inch minimum length of clear, transparent piping between each eductor well or well point and discharge header to allow visual monitoring of discharge from each installation.

B. Install sufficient piezometers or monitoring wells to show that trench or shaft excavations in water bearing materials are pre-drained prior to excavation. Provide separate piezometers for monitoring of dewatering and for monitoring of depressurization. Install piezometers and monitoring wells for tunneling as appropriate for selected method of work.

C. Install piezometers or monitoring wells at least one week in advance of the start of associated excavation.

D. Dewatering may be omitted for portions of under drains or other excavations, where auger borings and piezometers or monitoring wells show that soil is pre-drained by existing systems and that ground water control plan criteria are satisfied.

E. Replace installations that produce noticeable amounts of sediments after development.

F. Provide additional ground water control installations, or change method of control if, ground water control plan does not provide satisfactory results based on performance criteria defined by plan and by specifications. Submit revised plan according to Paragraph 1.06B.

3.03 SEDIMENT TRAPS

A. Install sediment tank as shown on approved plan.

B. Inspect daily and clean out tank when one-third of sediment tank is filled with sediment.

3.04 SEDIMENT SUMP PIT

A. Install sediment sump pits as shown on approved plan.

B. Construct standpipe by perforating 12 inch to 24-inch diameter corrugated metal or PVC pipe.

C. Extend standpipe 12 inches to 18 inches above lip of pit.

D. Convey discharge of water pumped from standpipe to sediment trapping device.

E. Fill sites of sump pits, compact to density of surrounding soil and stabilize surface when construction is complete.

3.05 EXCAVATION DRAINAGE

A. Use excavation drainage methods if well-drained conditions can be achieved. Excavation drainage may consist of layers of crushed stone and filter fabric, and sump pumping, in combination with sufficient ground water control wells to maintain stable excavation and backfill conditions.

3.06 MAINTENANCE AND OBSERVATION

A. Conduct daily maintenance and observation of piezometers or monitoring wells while ground water control installations or excavation drainage is operating at the site, or water is seeping into tunnels, and maintain systems in good operating condition.

B. Replace damaged and destroyed piezometers or monitoring wells with new piezometers or wells as necessary to meet observation schedules.

C. Cut off piezometers or monitoring wells in excavation areas where piping is exposed, only as necessary to perform observation as excavation proceeds. Continue to maintain and make specified observations

D. Remove and grout piezometers inside or outside of excavation area when ground water control operations are complete. Remove and grout monitoring wells when directed by Project Manager.

3.07 MONITORING AND RECORDING

A. Monitor and record average flow rate of operation for each deep well, or for each wellpoint or eductor header used in dewatering system. Also, monitor and record water level and ground water recovery. Record observations daily until steady conditions are achieved and twice weekly thereafter.

B. Observe and record elevation of water level daily as long as ground water control system is in operation, and weekly thereafter until Work is completed or piezometers or wells are removed, except when Project Manager determines more frequent monitoring and recording are required. Comply with Project Manager's direction for increased monitoring and recording and

take measures necessary to ensure effective dewatering for intended purpose.

3.08 SURFACE WATER CONTROL

A. Intercept surface water and divert it away from excavations through use of dikes, ditches, curb walls, pipes, sumps or other approved means. Requirement includes temporary works required to protect adjoining properties from surface drainage caused by construction operations.

B. Divert surface water and seepage water into sumps and pump it into drainage channels or storm drains, when approved by agencies having jurisdiction. Provide settling basins when required by agencies.

END OF SECTION

Section 01580

PROJECT IDENTIFICATION SIGNS

PART 1 G E N E R A L

1.01 SECTION INCLUDES

A. Project identification sign description.

B. Project sign installation.

C. Maintenance and removal of Project sign.

1.02 SYSTEM DESCRIPTION

A. Sign Construction: Construct signs of new materials in accordance with Standard Detail provided at the Pre-construction Conference.

B. Appearance: Maintain signs to present a clean and neat look throughout contract duration.

C. Sign Manufacturer: Experienced professional sign company.

D. Sign Placement: At locations shown in Drawings unless otherwise specified by Project Manager at pre-construction meeting.

1. Provide one sign at each end of a linear Project involving paving, overlay, sewer line, storm drainage, or water main construction located in rights-of-ways.

2. Provide one sign for site or building construction Contracts

3. Provide one sign at each site for Contracts with multiple sites.

4. Sign Relocation: As work progresses, relocate signs if directed by Project Manager in writing. Include cost for one relocation of post-mounted signs in Contract Price. Subsequent relocations, if directed by Project Manager in writing, will be subject to Change Order.

E. Skid-mounted signs: Use for projects with noncontiguous locations where work progresses from one location to another. Design skid structure to withstand a 60 mile-per-hour wind load to the face or back of sign using stakes, straps, or ballast. Contractor shall be responsible for security of signs at each site.

1.03 SUBMITTALS

A. Submit Shop Drawings under provisions of Section 01330 - Submittal procedures.

B. Show content, layout, lettering style, lettering size, and colors. Make sign and lettering to scale, clearly indicating condensed lettering, if used.

PART 2 P R O D U C T S

2.01 SIGN MATERIALS

A. Structure and Framing: Use new sign materials.

1. Sign Posts: 4-inch by 4-inch pressure treated wood posts, 9 feet long for skid mounting and 12 feet long minimum for in-ground mounting.

2. Skid Bracing: 2-inch by 4-inch wood framing material.

3. Skid Members: 2-inch by 6-inch wood framing material.

4. Fasteners:
   a. Galvanized steel.
   b. Attach sign to posts with 1/2-inch by 5-1/2 inch button head carriage bolts and secure with nuts and flat head washers.
   c. Cover button heads with white reflective film or paint to match sign background.
   d. Use metal brackets and braces and 3/4-inch wood screws to attach sign header.

B. Sign and Sign Header: 3/4-inch thick marine plywood. Use 4-foot by 8 -foot sheet for the sign and a single piece for the header to minimize joints. Do not piece wood sheets to fabricate sign face.

C. Paint and Primers: White industrial grade, fast-drying, oil-based paint with gloss finish for structural and framing members, sign, and sign header material surfaces. Paint all sign surfaces prior to adding adhesive applications.

D. Colors:

1. Sign Background: Reflective white 3M Scotchlite Engineer Grade, Pressure Sensitive Sheeting (White), or approved equal.

2. Border: For red border around area, which designates project name and project amount, use reflective red 3M Scotchlite Engineer Grade, Pressure Sensitive Sheeting (Red), or approved equal.

3. Sign Film: 3M Scotchcal Pressure Sensitive Films, or approved equal for legends, symbols, lettering, and artwork. Match colors to 3M Scotchcal Pressure Sensitive Films.

a.	Lettering Below Seal:	Black
b.	Lettering Above Project Name:	Vivid Blue
c.	Lettering on Blue Background:	White
d.	Background Behind Project Name:	Vivid Blue

E. City Seal: Project Manager will provide City seals to Contractor, as needed.

2.02 SIGN LAYOUT

A. Lettering:

1. Style, Size, and Spacing: Helvetica Regular lettering.

2. Condensed Style: Text may be condensed if needed to maintain sign composition.

B. Composition:

1. Lines with Standard Text
   a. Top line shall read “BUILDING TOGETHER FOR THE FUTURE”.
   b. Use lower left below City Seal to list names and titles for Mayor, Controller and Council Members. Place as shown on Drawings with indicated size and spacing.
   c. Center telephone number of the Customer Response Center, “311”, near the bottom of the area with the blue background.

2. Lines with Variable Text. Use blue background space for Project name and dollar amount.
   a. Project Manager will provide Project name and dollar amount of Project for preparation of sign. Center name on one or two lines, and dollar amount immediately below Project name, in area with blue background. Use condensed lettering if necessary.

2.03 LAYOUT AND COMPOSITION FOR HEADER

A. City of Houston Seal:
1. A space of approximately 24 inches in diameter is provided for the City seal, the top 6 inches of which extends above the sign on the sign header.

2. Construct sign header of same material as sign face. Cut material to match curve of the City seal.

3. Project Manager will provide the seal to be affixed to the sign by sign maker.

PART 3 E X E C U T I O N

3.01 INSTALLATION

A. Install Project identification signs within seven days after Date of Commencement of the Work.

B. Erect signs at locations shown in Drawings unless otherwise designated by Project Manager at pre-construction meeting. Position sign so it is fully visible and readable to general public.

C. Erect sign level and plumb.

D. If mounted on posts, sink posts 3 to 4 feet below grade and stabilize posts to minimize lateral motion. Leave a minimum of 8 feet of post above existing grade for mounting of sign.

E. Erect sign so that top edge of sign is at a nominal 8 feet above existing grade.

3.02 MAINTENANCE AND REMOVAL

A. Keep signs and supports clean. Repair deterioration and damage.

B. Remove signs, framing, supports, and foundations to a depth of at least 2 feet upon completion of Project. Restore area to a condition equal to or better than before construction.

PROJECT No.: **(FILE NO:)**	**CONTRACT No.:**	**REVIEWED BY:**

***INSTRUCTIONS TO SIGN MAKER** (LIST COMPANY NAME)**:**

QTY.	ACTION ITEMS:
	Make new sign(s)
	Follow City standards attached
	Provide submittal (drawing) to the City for project sign showing content, layout, lettering style, lettering size, and colors

VARIABLE TEXT

Line 1	Project Name:	
Line 2	Project Amount (rounded to nearest $1000):	

ATTACHMENTS INCLUDED

QTY.	SEALS / LOGOS
	City of Houston - 24" diameter
	STANDARDS
	Standard Specification Section 01580 - Project Identification Signs
	Standard Detail 01580-03 Construction Sign

(*Instructions on reverse.)*

INSTRUCTIONS

Contractor produces this form. Contractor shall insert the information and provide the form to the sign maker with Contractor's purchase order.

List PROJECT No., (FILE No.), CONTRACT No., and name of City's Project Manager REVIEWED BY.

INSTRUCTIONS TO SIGN MAKER:

- Give COMPANY NAME of sign maker.
- Indicate QUANTITY of new signs to be made.
- Direction for sign maker to follow City Standards in making signs.
- Require submittals from sign maker, who provides Shop Drawing of Project sign showing content, layout, lettering style, lettering size, and colors.

VARIABLE TEXT:

- Give PROJECT NAME. Write it out in all caps and suggest line break. Lines are required.
- Give Project amount to be listed on sign. Round off to nearest $1000.

ATTACHMENTS INCLUDED:

- **Seals**

  City provides the quantity of City seals required one for each Project sign.

- **Standards**

  Contractor provides set of Standards to sign maker, including (Specification Section 01580 - Project Identification Signs, and Standard Detail No. 01580-03 - Construction Sign.

Section 01581

EXCAVATION IN PUBLIC WAY PERMIT SIGNS

PART 1 G E N E R A L

1.01 SECTION INCLUDES

A. Project sign installation.

B. Maintenance and removal of Project sign.

1.02 SYSTEM DESCRIPTION

A. Sign Construction: Construct signs of new materials.

B. Appearance: Maintain signs to present a clean and neat look throughout the Contract duration.

C. Sign Placement: Place signs at each street entrance to street cut excavation.

1.03 SUBMITTALS

A. Submit Shop Drawings under provisions of Section 01330 - Submittal Procedures.

B. Show content, layout, lettering style, lettering size and colors. Make sign and lettering to scale, clearly indicating condensed lettering, if used.

PART 2 P R O D U C T S

2.01 SIGN LAYOUT

A. Conform to Texas Manual on Uniform Traffic Control Devices. Minimum size: 36 inches by 36 inches.

B. Lettering: Uppercase Helvetica Regular lettering.

C. Composition: Include on sign copy of street cut permit, title “City of Houston”, contracting department’s name, address, and emergency telephone number and Contractor’s name. Project Manager will provide department name, address, and emergency telephone number for preparation of sign.

PART 3 E X E C U T I O N

3.01 INSTALLATION

A. Install Project signs before commencement of pavement excavation in Public Way.

B. Position sign so it is fully visible and readable to general public.

C. Erect sign level and plumb.

D. Erect sign so that top edge of sign is at a nominal 8 feet above existing grade.

3.02 MAINTENANCE AND REMOVAL

A. Keep signs and supports clean. Repair deterioration and damage.

B. Remove signs, framing, supports and foundations to depth of at least 2 feet upon completion of the Work. Restore area to condition equal to or better than before construction.

END OF SECTION

Section 01610

BASIC PRODUCT REQUIREMENTS

PART 1 G E N E R A L

1.01 SECTION INCLUDES

A. Requirements for transportation, delivery, handling, and storage of Products.

1.02 PRODUCTS

A. Products: Defined in Document 00700 – General Conditions. Does not include machinery and equipment used for preparation, fabrication, conveying and erection of the Work. Products may also include existing materials or components designated for reuse.

B. For material and equipment specifically indicated or specified to be reused in the work:

1. Use special care in removal, handling, storage and reinstallation, to assure proper function in completed work.

2. Arrange for transportation, storage and handling of products which require off-site storage, restoration or renovation. Include cost in unit price for related items.

C. When contract documents require that installation of work comply with manufacturer's printed Instructions, obtain and distribute copies of such instructions to parties involved in installation, including two copies to Project Manager. Maintain one set of complete instructions at job site during installation until completion.

D. Provide Products from the fewest number of manufacturers as practical, in order to simplify spare parts inventory and to allow for maximum interchangeability of components. For multiple components of the same size, type or application, use the same make and model of component throughout the Work.

1.03 TRANSPORTATION

A. Make arrangements for transportation, delivery, and handling of Products required for timely completion of the Work.

B. Transport and handle Products in accordance with manufacturer's instructions.

C. Consign and address shipping documents to proper party giving name of the Project and its complete street address. Shipments shall be delivered to

Contractor.

1.04 DELIVERY

A. Arrange deliveries of Products to accommodate short-term site completion schedules and in ample time to facilitate inspection prior to Installation. Avoid deliveries that cause lengthy storage or overburden of limit storage space.

B. Coordinate deliveries to avoid conflict with the Work and conditions at the site and to accommodate the following:

1. Work of other contractors or the City.

2. Limitations of storage space.

3. Availability of equipment and personnel for handling Products.

4. The City's use of premises.

C. Have Products delivered to the site in manufacturer's original, unopened, labeled containers.

D. Immediately upon delivery, inspect shipment to assure:

1. Product complies with requirements of the Contract.

2. Quantities are correct.

3. Containers and packages are intact; labels are legible.

4. Products are properly protected and undamaged.

1.05 PRODUCT HANDLING

A. Coordinate off-loading of Products delivered to the site. If necessary during construction, move and relocate stored Products at no additional cost to the City.

B. Provide equipment and personnel necessary to handle Products, including those provided by the City, by methods to prevent damage to Products or packaging.

C. Provide additional protection during handling as necessary to prevent breaking, scraping, marring, or otherwise damaging Products or surrounding areas.

D. Handle Products by methods to prevent over-bending or overstressing.

E. Lift heavy components only at designated lifting points.

F. Handle Products in accordance with manufacturer's recommendations.

G. Do not drop, roll, or skid Products off delivery vehicles. Hand-carry or use Suitable materials handling equipment.

1.06 STORAGAE OF PRODUCTS

A. Store and protect Products in accordance with manufacturer's recommendations and requirements of these Specifications.

B. Make necessary provisions for safe storage of Products. Place Products so as to prevent damage to any part of the Work or existing facilities and to maintain free access at all times to all parts of the Work and to utility service company installations in the vicinity of the Work. Keep Products neatly and compactly stored in locations that will cause minimum inconvenience to other contractors, public travel, adjoining owners, tenants, and occupants. Arrange storage in a manner so as to provide easy access for inspection.

C. Restrict storage to areas available on the site for storage of Products as shown on Drawings or approved by Project Manager.

D. Provide off-site storage and protection when on-site storage is not adequate. Provide addresses of, and access to, off-site storage locations for inspection by Project Manager.

E. Do not use lawns, grass plots, or other private property for storage purposes without written permission of owner or other person in possession or control of premises.

F. Protect stored Products against loss or damage.

G. Store in manufacturers' unopened containers.

H. Neatly, safely, and compactly stack Products delivered and stored along the line of the Work to avoid inconvenience and damage to property owners and general public, and maintain at least 3 feet clearance around fire hydrants. Keep public, private driveways and street crossings open.

I. Repair or replace damaged lawns, sidewalks, streets or other improvements to satisfaction of Project Manager. Total length that Products may be distributed along route of construction at one time is 1000 linear feet, unless otherwise approved in writing by Project Manager.

PART 2 P R O D U C T S - Not Used

PART 3 E X E C U T I O N - Not Used

END OF SECTION

Section 01630

PRODUCT SUBSTITUTION PROCEDURES

PART 1 G E N E R A L

1.01 SECTION INCLUDES

A. Options for making Product or process selections.

B. Procedures for proposing equivalent Products or processes, including pre-approved, pre-qualified, and approved Products or processes.

1.02 DEFINITIONS

A. Product: As defined in Document 00700 – General Conditions. Product does not include machinery and equipment used for production, fabrication, conveying, and erection of the Work. Products may also include existing materials or components designated for reuse.

B. Process: Any proprietary system or method for installing system components resulting in an integral, functioning part of the Work. For this Section, the word Products includes Processes.

1.03 SELECTION OPTIONS

A. Pre-approved Products: Construction products of certain manufacturers or Suppliers designated in Specifications as "pre-approved." The City maintains a list of pre-approved products. Pre-approved Products for this Project are designated as pre-approved in Specifications. Products of other manufacturers or suppliers are not acceptable for this Project and will not be considered under the submittal process for approving alternate products.

B. Pre-qualified Products: Construction products of certain manufacturers or Suppliers designated in Specifications as "pre-qualified." Pre-qualified Products for this Project are designated as pre-qualified in Specifications. Products of other manufacturers or suppliers are not acceptable for this Project and will not be considered under the submittal process for approving alternate products.

C. Approved Products: Construction products of certain manufacturers or Suppliers designated in Specifications followed by words "or approved equal." Approval of alternate products not listed in Specifications may be obtained through provisions for product options and substitutions in Document 00700 - General Conditions, and by following submittal procedures specified in

Section 01330- Submittal Procedures. The procedure for approval of alternate products is not applicable to pre-approved or pre-qualified products.

D. Product Compatibility: To the maximum extent possible, provide Products that are of the same type or function from a single manufacturer, make, or source. Where more than one choice is available, select Product that is compatible with other Products already selected, specified, or in use by the City.

1.04 CONTRACTOR'S RESPONSIBILITY

A. Responsibility related to Product options and substitutions is defined in Document 00700 - General Conditions.

B. Furnish information Project Manager deems necessary to judge equivalency of alternate Product.

C. Pay for laboratory testing, as well as any other review or examination costs, needed to establish equivalency between products in order to obtain information upon which Project Manager can base a decision.

D. If Project Manager determines alternate product is not equal to that named in Specifications, Furnish one of the specified Products.

1.05 CITY REVIEW

A. Use alternate Products only when approved in writing by Project Manager. Project Manager's determination regarding acceptance of proposed alternate Product is final.

B. Alternate Products shall be accepted if Products are judged by Project Manager to be equivalent to specified Product or to offer substantial benefit to the City.

C. The City retains the right to accept any Product deemed advantageous to the City, and similarly, to reject any product deemed not beneficial to City.

1.06 SUBSTITUTION PROCEDURE

A. Collect and assemble technical information applicable to the proposed Product to aid in determining equivalency as related to the approved Product specified.

B. Submit a written request for a construction Product to be considered as an alternate Product.

C. Submit Product information after the effective date of the Contract and within the time period allowed for substitution submittals given in Document 00700 - General Conditions. After the submittal period has expired, requests for alternate Products shall be considered only when specified Product becomes unavailable because of conditions beyond Contractor's control.

D. Submit five copies of each request for alternate Product approval. Include the following information:

1. Complete data substantiating compliance of proposed substitution with the Contract.

2. For Products:
   a. Product identification, including manufacturer's name and address.
   b. Manufacturer's literature with Product description, performance and test data, and reference standards.
   c. Samples, as applicable.
   d. Name and address of similar projects on which Product was used and date of installation. Include names of Owner, design consultant, and installing contractor.

3. For construction methods:
   a. Detailed description of proposed method.
   b. Drawings illustrating methods.

4. Itemized comparison of proposed substitution with Product or method specified.

5. Data relating to changes in Construction Schedule.

6. Relation to separate contracts, if any.

7. Accurate cost data on proposed substitution in comparison with Product or method specified.

8. Other information requested by Project Manager.

E. Approved alternate Products will be subject to the same review process as the specified Product would have been for Shop Drawings, Product Data, and Samples.

PART 2 P R O D U C T S - Not Used

PART 3 E X E C U T I O N - Not Used

END OF SECTION

Section 01725

FIELD SURVEYING

PART 1 G E N E R A L

1.01 QUALITY CONTROL

A. Conform to State of Texas laws for surveys requiring licensed surveyors. Employ a surveyor acceptable to Project Manager if required by the Contract.

1.02 MEASUREMENT AND PAYMENT

A. UNIT PRICES

1. No separate payment will be made for field surveying. Include cost in unit price for related items.

1.03 SUBMITTALS

A. Conform to requirements of Section 01330 - Submittal Procedures.

B. Submit name, address, and telephone number of Surveyor to Project Manager before starting survey work.

C. Submit documentation verifying accuracy of survey work on request.

D. Submit certificate signed by Surveyor, that elevations and locations of the Work are in conformance with the Contract.

1.04 PROJECT RECORD DOCUMENTS

A. Maintain a complete and accurate log of control and survey work as it progresses.

B. Prepare a certified survey setting forth dimensions, locations, angles, and elevations of construction and site work upon completion of foundation walls and major site improvements.

C. Submit record documents under provisions of Section 01785 - Project Record Documents.

1.05 EXAMINATION

A. Verify locations of survey control points prior to starting the Work.

B. Notify Project Manager immediately if any discrepancies are discovered.

1.06 SURVEY REFERENCE POINTS

A. The City will establish survey control datum as provided in Document 00700 - General Conditions and as indicated on Drawings. Inform Project Manager in Advance of time horizontal and vertical control points will be established so

verification deemed necessary by Project Manager may be done with minimum inconvenience to the City or Contractor.

B. Locate and protect survey control points prior to starting site work; preserve permanent reference points during construction.

C. Notify Project Manager a minimum of 48 hours before relocation of reference points is needed due to changes in grades or other reasons.

D. Promptly report loss or destruction of reference points to Project Manager.

E. Reimburse the City for cost of reestablishment of permanent reference points disturbed by construction operations.

1.07 SURVEY REQUIREMENTS

A. Utilize recognized engineering survey practices.

B. Establish a minimum of two permanent benchmarks on site, referenced to established control points. Record horizontal and vertical location data on Project record documents.

C. Establish elevations, lines and levels to provide quantities required for measurement and payment and for appropriate controls for the Work. Locate and lay out the following with appropriate instruments:

1. Site improvements including grading, fill and topsoil placement, utilities, and footings and slabs

2. Grid or axis for structures

3. Building foundation, column locations, and ground floor elevations

D. Periodically verify layouts.

PART 2 P R O D U C T S - Not Used

PART 3 E X E C U T I O N - Not Used

END OF SECTION

Section 01731

CUTTING AND PATCHING

PART 1 G E N E R A L

1.01 SECTION INCLUDES

A. Cutting, patching and fitting of the Work or work under construction. Coordinating Installation or connection of the Work to existing facilities, or uncovering work for access, inspection or testing and related submittals.

1.02 MEASUREMENT AND PAYMENT

A. UNIT PRICES

1. No separate payment will be made for cutting and patching. Include cost in unit price for related items.

1.03 CUTTING AND PATCHING

A. Perform activities to avoid interference with facility operations and work of others in accordance with Document 00700 - General Conditions of Contract.

B. Execute cutting and patching, including excavation, backfill and fitting to:

1. Remove and replace defective work or work not conforming to Drawings and Specifications;

2. Take samples of installed work as required for testing;

3. Remove construction required to provide for specified alterations or additions to existing work;

4. Uncover work to allow inspection or reinspection by Project Manager or regulatory agencies having jurisdiction;

5. Connect uninstalled work to completed work in proper sequence;

6. Remove or relocate existing utilities and pipes that obstruct work;

7. Make connections or alterations to existing or new facilities;

8. Provide openings, channels, chases and flues and cut, patch, and finish; if required; or

9. Provide protection for other portions of the Work.

C. Restore existing work to a condition equal to or better than that which existed Prior to cutting and patching, and to standards required by Specifications.

D. Support, anchor, attach, match, trim and seal materials to work of others. Unless otherwise specified, Furnish and Install sleeves, inserts, and hangers required for execution of the Work.

E. Provide shoring, bracing and support necessary to maintain structural integrity and to protect adjacent work from damage during cutting and patching. Request written approval from Project Manager, before cutting structural members such as beams, anchors, lintels, or other supports. Follow approved submittals, as applicable.

F. Match new materials to existing materials by bonding, lapping, mechanically tying, anchoring or other effective means in order to prevent cracks and to minimize evidence of patching. Conceal effects of demolition and patching by blending new construction to existing surfaces. Avoid obvious breaks, joints or changes of surface appearance unless shown on Drawings or authorized by Project Manager.

1.04 SUBMITTALS

A. Conform to requirements of Section 01330 - Submittal Procedures.

B. Submit a written request to Project Manager for consent to proceed, before conducting cutting operations that might affect structural integrity, design function, City operations, or work of another contractor.

C. Include the following in submittal:

1. Identification of Project

2. Description of affected work

3. Necessity for cutting

4. Effect on other work and on structural integrity

5. Describe the proposed work including:
   a. Scope of cutting and patching
   b. Contractor, Subcontractor or Supplier who will execute the work
   c. Proposed Products
   d. Extent of refinishing
   e. Schedule of operations

6. Alternatives to cutting and patching

D. When work conditions or schedules dictate the need for change of materials or methods, submit a written recommendation to Project Manager that includes:

1. conditions necessitating the change;

2. recommendations for alternative materials or methods; and

3. submittals required for proposed substitutions

E. Notify Project Manager in writing when work will be uncovered for observation. Do not begin cutting or patching operations until authorized by Project Manager.

1.05 CONNECTIONS TO EXISTING FACILITIES

A. Perform construction operations necessary to complete connections and tie-ins to existing facilities. Keep existing facilities in continuous operation unless otherwise permitted in the Specifications or approved in writing by Project Manager.

B. Coordinate interruption of service requiring connection to existing facilities with Project Manager. Do not bypass wastewater or sludge to waterways. Provide temporary pumping facilities to handle wastewater if necessary. Use temporary bulkheads to minimize disruption. Provide temporary power and piping to facilitate construction where necessary.

C. Submit a detailed schedule of proposed connections, including shut-downs and tie-ins. Include proposed time and date as well as anticipated duration of work. Coordinate the connection schedule with the construction schedule.

1. Submit specific times and dates to Project Manager at least 48 hours in advance of proposed work.

D. Procedures and Operations:

1. Operate existing pumps, valves and gates in required sequence under supervision of Project Manager. Do not operate valves, gates or other items of equipment without Project Manager's knowledge.

2. If possible, test equipment under operating conditions before making final tie-ins to connect equipment to existing facility.

3. Coordinate work and schedules. Notify Project Manger at least 48 Hours before shutdowns or bypasses are required.

PART 2 P R O D U C T S Not Used

PART 3 E X E C U T I O N Not Used

END OF SECTION

Section 01732

PROCEDURE FOR WATER VALVE ASSISTANCE

PART 1 G E N E R A L

1.01 SECTION INCLUDES

A. Operation of valves. City of Houston employees will operate existing valves. Contractor's employees may operate new valves included in the Project prior to acceptance by the City.

1.02 PROCEDURE

A. Perform activities listed in Exhibit A attached to this Section.

1.03 SUBMITTALS

A. Submit request for work order planning meetings in accordance with Exhibit A. Include information listed in Step 1 of Exhibit A, attached to this Section.

1.04 CANCELLATION

A. Contractor, Project Manager, or Public Utilities Division may cancel a scheduled valve assistance appointment at no extra cost or payment to Contractor. Contractor shall notify City's appointed Project Inspector ("Inspector") 24 hours in advance of cancellation. Inspector shall notify Central Operation Service (COS) immediately upon receipt of cancellation notice. Cancellation may be caused by bad weather, preparation work taking longer than anticipated, or unforeseen delays by one or more of the three parties.

PART 2 P R O D U C T S - Not Used

PART 3 E X E C U T I O N - Not Used

END OF SECTION

PAGE LEFT INTENTIONALLY BLANK

EXHIBIT A

PROCEDURE FOR VALVE ASSISTANCE

The following procedure will be used by Utility Maintenance Branch personnel when completing a service request from individual Contractors, through Inspector, for operation of existing water valves.

ROUTINE VALVE ASSISTANCE REQUEST (NON-EMERGENCY JOBS):

Step 1. a. When notified by Contractor, Inspector will schedule a work order planning meeting by calling Central Operation Service (COS) at **(713) 295-5521** and providing information shown below. The work order planning meeting shall be conducted a minimum of three days after the request; excluding weekends, holidays, inclement weather days, and the day of the call.

Location of Work (Street Intersection)	Project #
Project Description	Contractor (Company Name)
Job Superintendent's Name	Superintendent's Office #/Mobile #/Pager #
Contractor's Emergency Information	Name and Phone #/Mobile #/Pager #
Inspector/Senior Inspector	Name, Phone #/Mobile #/Pager #
Date & Time assistance is requested	

b. COS will create a work order for each wet connection, cut and plug, etc. that will be designated as a "Code 40" (Private Contractor).

c. COS will give Inspector the work order number. This work order number must be used as a reference in all communications regarding this request for Valve Assistance.

d. Valve personnel must have the work order number on their route sheet. When valve personnel arrive at the job site for the Work Order Planning Meeting between Inspector, Contractor, and Utility Maintenance valve personnel, they will verify the street intersection and work order number with the Inspector before beginning Work Order Planning Meeting.

e. During Work Order Planning Meeting, the work to be performed will be outlined and the actual date work will be performed will be mutually determined by Inspector, Contractor and City's Utility Maintenance Division valve personnel, based upon relevant factors such as preparatory work needed, customer requirements, etc.

f. Valve personnel will perform work specifically outlined in the work order requested. Also, Utility Maintenance Branch valve personnel will only operate existing water valves. Inspector must contact COS and request a new work order for additional work.

g. Valve personnel will contact the dispatcher and advise when the job is complete. Valve personnel will list all appropriate information on the Crew Activity Report.

Step 2. Should valve personnel not be able to keep an appointment to provide valve assistance, Utility Maintenance Branch will provide notification to appropriate Inspector by phone at least 24 hours prior, with that fact and rescheduling information, if available.

Step 3. Inspector will notify COS if valve personnel have not arrived at the site within 30 minutes of scheduled appointment. If Contractor is not ready when valve operator arrives to provide valve assistance, the City shall charge Contractor $50.00 per hour, starting 15 minutes after the scheduled appointment time, minimum one hour charge.

Step 4. Contractor will not be due delay claims or downtime if Utility Maintenance Branch has notified Inspector that they will not be able to provide valve assistance as scheduled.

Step 5. Test installed new valves in the presence of Inspector before substantial completion inspection is scheduled. Place new valves in open position on or before the Date of Substantial Completion.

Step 6. Project Manager will notify, in writing, Utility Maintenance Branch two months before the warranty expires to report any problems they have with new water lines. Project Manager will notify Contractor about these problems.

EMERGENCY REQUEST FOR VALVE ASSISTANCE PROCEDURE:

Step 1. When notified by Contractor, Inspector will request emergency Valve Assistance due to a broken line/service, etc. by calling COS at **(713) 295-5521** and providing the following information:

Location of Work (Street Intersection)	Project #
Project Description	Superintendent's Office #/Mobile #/Pager #
Contractor (Company Name)	Name and Phone #/Mobile #/Pager #
Job Superintendent's Name	Name, Phone #/Mobile #/Pager #
Contractor's Emergency Information	
Inspector/Senior Inspector	
Date & Time assistance is requested	

Step 2. COS will create an emergency work order number and describe the work to be performed.

Step 3. COS will give Inspector the emergency work order number. Reference work order number in all communications regarding request for Valve Assistance.

Step 4. COS will contact designated valve personnel and assign emergency work order. Dispatcher will follow standard COS procedures if this situation occurs after normal working hours.

Step 5. Valve personnel must have the emergency work order number on the route sheet. When valve personnel arrive at the job site for emergency work, they will verify the street intersection and emergency work order number with Inspector prior to beginning work requested for operating existing water valves. Valve personnel will coordinate verification of street intersection and work order number with Inspector prior to performing work.

Section 01740

SITE RESTORATION

PART 1 G E N E R A L

1.01 SECTION INCLUDES

A. Restoration of site affected by the Work in public or private property, including pavement, esplanades, sidewalks, driveways, fences, lawns and landscaping.

1.02 MEASUREMENT AND PAYMENT

A. Unit Prices.

1. Payment for restoration of Project site disturbed by utility construction operations is on a linear foot basis. Measurement will be as provided for corresponding utility in each Specification section. No separate payment made for branch pipe, valves and, other associated work for utilities. Measurement for restoration with multiple utilities within the same right-of-way will be on a linear foot basis for only one utility.

2. No separate payment made for facility or roadway projects. Include cost in the surface improvements associated with the facility or roadway construction.

3. Payment includes required site restoration within the right-of-way or easement regardless of size or type of pipe, method of construction, paved or unpaved areas or thickness and width of pavement.

4. No separate payment made for site restoration for service connections under this Section. Include cost in appropriate utility section.

5. Refer to Section 01270 – Measurement and Payment for Unit Price procedures.

B. Stipulated Price (Lump Sum) Contracts. If Contract is Stipulated Price Contract, include payment for work under this section in total Stipulated Price.

1.03 DEFINITIONS

A. Phase: Locations identified on the plans and listed in Section 1110 – Summary of Work under Work Sequence.

B. Site Restoration: Replacement or reconstruction of Site Improvements located in rights-of-way, easements, public property, and private property affected or altered by the Work.

C. Site Improvement: Includes pavement, curbs and gutters, esplanades, sidewalks, driveways, fences, lawns, irrigation systems, landscaping, and other improvements in existence at the Project site before commencement of construction operations.

1.04 SUBMITTALS

A. Conform to requirements of Section 01330 - Submittal Procedures.

B. Schedule of testing, service connections, abandonment, backfill, and site restoration.

C. Sample of notices to residents outlining their responsibility for maintenance of site improvements adjacent to the Project that are not disturbed by construction operations

1.05 SCHEDULING

A. Schedule testing, service connections, abandonment, backfill and site restoration immediately following completion of pipe laying work or paving within each block or line segment.

B. Phased Construction:

1. Commencement of subsequent Phase will follow scheduling of site restoration of prior Phase. Limit work to a maximum of two Phases of the project.

C. Construction of Projects with no Phases listed in Section 01110- Summary of Work:

1. Complete site restoration prior to disturbing over 50% of total project linear feet or 2,000 linear feet, whichever is greater, of right-of-way or easement.

2. Limit work to a maximum of 50% of total project linear feet or 2,000 linear feet, whichever is greater, of right-of-way and easement. Commence work in additional right-of-way or easement after completion of site restoration.

PART 2 P R O D U C T S

2.01 MATERIALS

A. Pavement, Sidewalks and Driveways: Materials specified in Section 02951 - Pavement Repair and Resurfacing.

B. Seeding and Sodding: Sod specified in Section 02922 - Sodding and Seed specified in Section 02921 - Hydromulch Seeding.

C. Trees, Shrubs and Plantings: Conform to requirements of Section 01562 – Tree and Plant Protection.

PART 3 E X E C U T I O N

3.01 Preparatory Work

A. Provide cleanup and restoration crews to work closely behind pipe laying and roadway construction crews, and where necessary, during testing, service restoration, abandonment, backfill and surface restoration.

B. Water Lines: Unless otherwise approved by Project Manager, comply with the following:

1. Once Project Manager approves work within a Phase, immediately begin preparatory work for disinfection effort.

2. No later than three days after completing disinfection preparatory work, submit to City appropriate request for disinfection.

3. If City fails to perform initial disinfection of lines in accordance with Section 2514 - Disinfection of Water Lines, within seven days from submission of appropriate request, and if approved by Project Manager, pipe laying operations may continue beyond approved limits until the City responds.

4. Immediately after transfer of services, begin abandonment of old water lines and site restoration.

C. Wastewater Lines:

1. Once Project Manager approves work within a Line Segment, immediately begin preparatory work for testing effort.

2. No later than three days after completing preparatory work for testing, initiate testing work.

3. Immediately after transfer of service connections, begin abandonment of old wastewater lines, and site restoration.

D. Street Construction and Paving Projects

1. Once Project Manager approves work within a Line Segment or block, immediately begin preparatory work for testing effort.

2. No later than three days after completing preparatory work for testing, initiate testing work.

3. Immediately after testing begin site restoration.

E. Street Construction and Paving Projects

1. Once Project Manager approves work within a block, immediately begin preparatory work for sidewalk construction, sodding and hydromulching and tree planting.

2. No later than seven days after completing preparatory work, initiate construction.

3.02 CLEANING

A. Remove debris and trash to maintain a clean and orderly site in accordance with requirements of General Conditions and Section 01576 - Waste Material Disposal.

3.03 LANDSCAPING AND FENCES

A. Seeding and Sodding.

1. Remove construction debris and level area with bank sand so that new grass surface matches level of existing grass and maintains pre-construction drainage patterns. Level and fill minor ruts or depressions caused by construction operations with bank sand, where grass is still viable.

2. Restore previously existing turfed areas with sod and fertilize in accordance with Section 02922 - Sodding. Sod to match existing turf.

3. Restore unpaved areas not requiring sodding with hydromulch seeding conforming to Section 02921 - Hydromulch Seeding.

B. Trees, Shrubbery and Plants.

1. Remove and replant trees, shrubs, and plants in accordance with requirements of Section 01562 – Tree and Plant Protection.

C. Fence Replacement.

1. Replace removed or damaged fencing to equal or better condition than existed prior to construction, including concrete footings and mow strips. Provide new wood posts, top and bottom railing and panels. Metal fencing material, not damaged by the Work, may be reused.

2. Remove and dispose of damaged or substandard material.

3.04 MAINTENANCE

A. Maintain shrubs, plantings, sodded areas and seeded areas.

B. Replace shrubs, plantings and seeded or sodded areas that fail to become established.

C. Refer to Section 01562 - Tree and Plant Protection, Section 02921 - Hydromulch Seeding and Section 02922 - Sodding for maintenance requirements.

END OF SECTION

Section 01755

STARTING SYSTEMS

PART 1 G E N E R A L

1.01 SECTION INCLUDES

A. Starting systems.

B. Demonstration and instructions.

C. Testing, adjusting and balancing.

PART 2 P R O D U C T S - Not Used

PART 3 E X E C U T I O N

3.01 PREPARATION

A. Coordinate schedule for start-up of various equipment and systems.

B. Notify Project Manager seven days prior to startup of each item.

C. Verify each piece of equipment or system has been checked for proper lubrication, drive rotation, belt tension, control sequence, or other damage-causing conditions.

D. Verify tests, meter readings, and specified electrical characteristics agree with those required by equipment or system manufacturer.

E. Verify wiring and support components for equipment are complete and tested.

F. Execute start-up under supervision in accordance with manufacturer's instructions.

G. When specified in individual Specification sections, require manufacturer to provide an authorized representative to be present at the site to inspect, check and approve equipment or system installation prior to start-up, and to supervise placing equipment or system in operation.

H. Submit written report indicating that equipment or system has been properly installed and is functioning correctly.

3.02 DEMONSTRATION AND INSTRUCTIONS

A. Demonstrate operation and maintenance of Products to Project Manager two weeks prior to Date of Substantial Completion.

B. Utilize O&M Manuals as the basis for instruction. Review contents of manual with Project Manager in detail to explain aspects of operation and maintenance.

C. Demonstrate start-up, operation, control, adjustment, trouble-shooting, servicing, maintenance, and shutdown of each item of equipment at agreed-upon times, at the equipment location.

D. Prepare and insert additional data in O&M Manuals when the need for additional data becomes apparent during instruction.

E. At a minimum, Contractor will demonstrate the following:

1. Products and procedures to be used in maintaining various surfaces, e.g., counter tops, toilet partitions, tile floors and carpeting;

2. procedures to set and maintain landscape irrigation system;

3. procedures to set and maintain security and fire alarm systems; and

4. procedures to set and maintain HVAC systems.

3.03 TESTING, ADJUSTING AND BALANCING

A. Contractor shall appoint, employ and pay for the services of an independent firm to perform testing, adjusting and balancing.

B. Submit reports by the independent firm to Project Manager describing observations and results of tests and signifying compliance or non-compliance with specified requirements and requirements of the Contract.

END OF SECTION

Section 01770

CLOSEOUT PROCEDURES

PART 1 G E N E R A L

1.01 SECTION INCLUDES

A. Procedures to establish Date of Substantial Completion.

B. Closeout procedures for final submittals, O&M data, warranties, spare parts and maintenance materials.

C. Texas Department of Licensing and Regulation (TDLR) inspection for Texas Accessibility Standards (TAS) compliance.

1.02 SUBSTANTIAL COMPLETION

A. Comply with Document 00700 - General Conditions regarding Date of Substantial Completion when Contractor considers the Work, or portion thereof designated by Project Manager, to be substantially complete.

B. Insure the following items have been completed when included in the Work, prior to presenting a list of items to be inspected by Project Manager for issuance of a Certificate of Substantial Completion:

1. cutting, plugging, and abandoning of water, wastewater, and storm sewer lines, as required by Contract documents for each item;

2. construction of, and repairs to, pavement, driveways, sidewalks, and curbs and gutters;

3. sodding and hydromulch seeding, unless waived by Project Manager in writing;

4. general clean up including pavement markings, transfer of services, successful testing and landscape;

5. additional requirements contained in Section 01110 - Summary of Work.

C. Assist Project Manager with inspection of Contractor's list of items and complete or correct the items, including items added by Project Manager, within specified time period.

D. Should Project Manager's inspection show failure of Contractor to comply with requirements to obtain Date of Substantial Completion, including those items in Paragraph 1.02 B. of this section, Contractor shall complete or correct the items, before requesting another inspection by Project Manager.

1.03 CLOSEOUT PROCEDURES

A. Comply with Document 00700 - General Conditions regarding final completion and final payment when the Work is complete and ready for Project Manager's final inspection.

B. Provide Project Record Documents in accordance with Section 01785 - Project Record Documents.

C. Complete or correct items on punch list, with no new items added. Address new items during warranty period.

D. The City will occupy portions of the Work as specified in other sections.

1.04 FINAL CLEANING

A. Execute final cleaning prior to final inspection.

B. For facilities, clean interior and exterior glass and surfaces exposed to view; remove temporary labels, stains and foreign substances, polish transparent and glossy surfaces, vacuum carpeted and soft surfaces.

C. Clean equipment and fixtures to sanitary condition.

D. Clean or replace filters of operating equipment.

E. Clean debris from roofs, gutters, down spouts, and drainage systems.

F. Clean site; sweep paved areas, and rake clean landscaped surfaces.

G. Remove waste and surplus materials, rubbish, and temporary construction facilities from site following final test of utilities and completion of the Work.

1.05 ADJUSTING

A. Adjust operating equipment to ensure smooth and unhindered operation. Value of this testing and adjusting is five percent of Lump Sum Price in the Schedule of Values for item being tested.

1.06 OPERATION AND MAINTENANCE DATA

A. Submit O&M data as noted in Section 01330 - Submittal Procedures.

B. Five percent of lump sum amount of each piece of equipment as indicated in Schedule of Unit Price Work or Schedule of Values will be paid after the required O&M data submittals are received and approved by Project Manager.

1.07 WARRANTIES

A. Provide one original of each warranty from Subcontractors, Suppliers, and manufacturers.

B. Provide Table of Contents and assemble warranties in a 3-ring/D binder with durable plastic cover.

C. Submit warranties prior to final progress payment.

D. Warranties shall commence in accordance with the requirements in Document 00700 - General Conditions.

1.08 SPARE PARTS AND MAINTENANCE MATERIALS

A. Provide Products, spare parts, maintenance and extra materials in quantities specified in individual Specification sections.

B. Deliver to a location within the City limits as directed by Project Manager. Applicable items must be delivered prior to issuance of a final Certificate for Payment.

PART 2 P R O D U C T S - Not Used

PART 3 E X E C U T I O N - Not Used

END OF SECTION

SECTION 01782 (Large Diameter)

OPERATIONS AND MAINTENANCE PERSONNEL INSTRUCTION

PART 1 GENERAL

1.01 SECTION INCLUDES

A. Requirements of services of manufacturer-approved factory-trained maintenance specialist to instruct City's operations and maintenance personnel in recommended corrective and preventive maintenance procedures for equipment as specified in respective equipment section.

1.02 MEASUREMENT AND PAYMENT

A. No separate payment will be made for work performed under this section. Include cost of such training, instruction material, submittals and resubmittals in contract unit prices for items listed in bid form for which equipment is a part.

1.03 REQUIREMENTS

A. Qualifications of specialist to be subject to approval by City's representative.

B. Responsible for coordinating these services at times acceptable to Engineer, with a minimum of 30 days' prior notice.

C. Provide combination of classroom and/or field training. Conduct all training at City of Houston facilities in Houston, Texas.

D. Training sessions may be videotaped by City. Taped sessions are property of City and City retains right to use tapes for training of City of Houston personnel.

E. Schedule training for particular item or system after complete installation and testing for that item or system. Submit training schedules to Engineer for approval.

F. Minimum requirements for training are as shown by item/system and unless otherwise noted elsewhere minimum number of training hours to be provided is 4 per item/system. Hours shown are actual "instruction hours" (classroom or demonstrations) irrespective of number of people attending training session. Additional training requirements may be specified in other sections of specifications.

1.04 SUBMITTALS

A. Submit all items required within this section in accordance with Section 01330 - Submittals.

B. Submit for approval a proposed Lesson Plan for instruction 30 days prior to commencement of scheduled training.

C. Submit for approval credentials of designated maintenance instructor. Credentials will include resume and specific details of instructor's experience with maintenance of and training on items specified.

D. Operation and Maintenance Data: In addition to specific data required by various sections of specifications, provide following information for each piece of equipment which requires periodic maintenance:

1. Manufacturer's Data:

   a. Name and description.

   b. Size and/or model number.

   c. Manufacturer's name, address and telephone number.

   d. Supplier's name, address and telephone number.

   e. All equipment serial numbers.

2. Nameplate Data: Supply all applicable information for each piece of equipment listed in paragraph above.

   a. Volts.

   b. Amps.

   c. Watts.

   d. Phases.

   e. Hertz.

   f. Frame.

   g. Type.

   h. PSI.

   i. Other pertinent information.

3. Manufacturer's operations, maintenance and repair literature and other information. Provide following information as a minimum:

a. Manufacturer's recommended preventive maintenance procedures and maintenance intervals. Give maintenance intervals in terms of both calendar time and operation time.

b. Parts Information:

1) Exploded-view assembly drawing(s) of equipment. Clearly show all parts including maintainable subassembly parts in drawing(s). Consider all subassemblies maintainable unless City acknowledges in writing that subassembly is disposable. Identify all parts with number or letter which references Parts List Table described in section 2) below.

2) A Parts List Table which includes all of the following information:

a) Part reference number or letter from the exploded-view drawing.

b) Brief description of part.

c) Manufacturer's part number/drawing reference number.

d) Standard part description when applicable, i.e. 1/2-inch hex head bolt.

e) Quantity of each part contained in equipment, assembly or subassembly.

f) Manufacturer's recommendation for stocking of spare parts for each item in Parts List Table.

c. Special Tools: List any special tools and/or equipment required to comply with manufacturer's recommended maintenance instructions.

d. Overhaul Procedures: Provide step-by-step procedures by manufacturers for complete disassembly, overhaul and reassembly of equipment.

e. Operating Procedures: Provide detailed information on following:

1) Pre-startup checkout procedure.

2) Startup procedures.

3) During operation checks and procedures.

4) Shutdown procedures for following:

a) Routine shutdown.

b) Emergency shutdown.

c) Extended shutdown.

f. Safety precautions.

g. Comprehensive troubleshooting guide.

h. Electrical and instrumentation wiring diagrams.

i. Test data and performance curves.

4. Assemble required manufacturer's information in logical format. Provide Items 1 through 3 in tabular form for each piece of equipment. Provide cross references to manufacturer data submittals as required by Section 01340 - Shop Drawings, Product Data and Samples. All information to be 8-1/2" x 11" or 11" x 17" in size and of quality suitable for reproductions. Items submitted by the Contractor which do not produce an acceptable quality reproduction will be returned for resubmittal. All information shall be bound in a suitable hard-covered, weatherproof binder. Provide six copies of above information.

5. Contractor, by way of his bid, acknowledges that any or all of above Operation and Maintenance submittal requirements may be more extensive and more detailed than what Contractor typically supplies. However, it is understood that, in case of any piece of equipment requiring periodic maintenance, NO PAYMENT FOR SUPPLY, DELIVERY AND INSTALLATION OF SUCH EQUIPMENT WILL BE MADE UNTIL ALL REQUIREMENTS SPECIFICALLY NOTED IN THIS TECHNICAL SPECIFICATION RELATING TO OPERATION AND MAINTENANCE DATA HAVE BEEN COMPLIED WITH.

PART 2 PRODUCTS

2.01 INSTRUCTION LESSON PLAN

A. Proposed Lesson Plan to include elements presented in Outline of Instruction Lesson Plan in paragraph 2.01D. Specific components and procedures to be identified in proposed Lesson Plan.

B. Detail specific instruction topics in proposed Lesson Plan. Reference and attach, where applicable to proposed Lesson Plan, training aids to be utilized in instruction. Describe "hands-on" demonstrations planned for instruction in Lesson Plan.

C. Indicate estimated duration of each segment of training Lesson Plan.

D. Outline of Instruction Lesson Plan:

1. Equipment Operation:

   a. Describe equipment's operating function.

   b. Describe equipment's fundamental operating principals and dynamics.

   c. Identify equipment's mechanical, electrical and electronic components and features.

   d. Identify all support equipment associated with operation of subject equipment (i.e., valve operators, anodes, test stations).

2. Detailed Component Description:

   a. Identify and describe in detail each component's function.

   b. Where applicable, group related components into subsystem. Describe subsystem functions and their interaction with other subsystems.

   c. Identify and describe in detail equipment safeties and control interlocks.

3. Equipment Preventive Maintenance (PM):

   a. Describe PM inspection procedures required to:

      1) Perform an inspection of equipment in operation.

      2) Spot potential trouble symptoms (anticipate breakdowns).

      3) Forecast maintenance requirements (predictive maintenance).

   b. Define recommended PM intervals for each component.

   c. Provide lubricant and replacement part recommendations and limitations.

   d. Describe appropriate cleaning practices and recommended intervals.

4. Equipment Troubleshooting:

   a. Define recommended systematic troubleshooting procedures.

   b. Provide component specific troubleshooting checklists.

   c. Describe applicable equipment testing and diagnostic procedures to facilitate troubleshooting.

5. Equipment Corrective Maintenance:

   a. Describe recommended equipment preparation requirements.

   b. Identify and describe use of any special tools required for maintenance of equipment.

   c. Describe component removal/installation and disassembly/ assembly procedures.

   d. Perform at least two "hands-on" demonstrations of common corrective maintenance repairs.

   e. Describe recommended measuring instruments and procedures, and provide instruction on interpreting alignment measurements, as appropriate.

   f. Define recommended torquing, mounting, calibration and/or alignment procedures and settings, as appropriate.

   g. Describe recommended procedures to check/test equipment following a corrective repair.

6. Other items as contained in operation and maintenance manual, as defined in Section 01330 - Submittals.

2.02 TRAINING AIDS

A. Instructor shall incorporate training aids as appropriate to assist in instruction. Include text and figure handouts as a minimum in training aids. Other appropriate training aids are:

   1. Audiovisual aids (e.g., films, slides, videotapes, overhead transparencies, posters, blueprints, diagrams, catalogue sheets).

   2. Equipment cutaways and samples (e.g., spare parts, damaged equipment).

3. Tools (e.g., repair tools, customized tools, measuring and calibrating instruments).

B. Instructor shall utilize descriptive class handouts during instruction. Photocopied class handouts shall be good quality reproductions. Class handouts should accompany instruction with frequent reference made to them. Customized handouts developed especially for instruction are encouraged. Handouts planned for instruction shall be attached with manufacturer's proposed Lesson Plan.

PART 3 EXECUTION

3.01 "HANDS-ON" DEMONSTRATIONS

A. Manufacturer's instructor shall present at least two "hands-on" demonstrations of common corrective maintenance repairs for each scheduled group. Manufacturer shall provide tools and equipment to conduct demonstrations. Requests for supplemental assistance and facilities should be submitted with proposed Lesson Plan. Proposed "hands-on" demonstrations should be described in proposed Lesson Plan.

END OF SECTION

Section 01785

PROJECT RECORD DOCUMENTS

PART 1 G E N E R A L

1.01 SECTION INCLUDES

A. Maintenance and submittal of record documents and Samples.

1.02 MAINTENANCE OF DOCUMENTS AND SAMPLES

A. Maintain one record copy of documents at the site in accordance with Document 00700 - General Conditions.

B. Store record documents and Samples in field office, if a field office is required by the Contract, or in a secure location. Provide files, racks, and secure storage for record documents and Samples.

C. Label each document "PROJECT RECORD" in neat, large, printed letters.

D. Maintain record documents in a clean, dry, and legible condition. Do not use record documents for construction purposes. Do not use permit drawings to record Modifications to the Work.

E. Keep record documents and Samples available for inspection by Project Manager.

F. Bring record documents to progress review meetings for viewing by Project Manager and, if applicable, Design Consultant.

1.03 RECORDING

A. Record information legibly with red ink pen on a set of blueline opaque drawings, concurrently with construction progress. Maintain an instrument on site at all times for measuring elevations accurately. Do not conceal work until required information is recorded

B. Contract Drawings and Shop Drawings: Mark each item to record completed Modifications, or when minor deviations exist, the actual construction including:

1. Measured depths of elements of foundation in relation to finish first floor datum.
2. Measured horizontal locations and elevations of Underground Facilities and appurtenances, referenced to permanent surface improvements.

3. Elevations of Underground Facilities referenced to City of Houston benchmark utilized for the Work.

4. Measured locations of internal utilities and appurtenances concealed in construction, referenced to visible and accessible features of the Work.

5. Dimensions and details of field changes

6. Changes made by Modifications.

7. Details not on original Drawings.

8. References to related Shop Drawings and Modifications.

C. Survey all joints of water mains at the time of construction. Record on Drawings, water main invert elevation, elevation top of manway, and centerline horizontal location relative to baseline.

D. For large diameter water mains, mark specifications and addenda to record:

1. Manufacturer, trade name, catalog number and Supplier of each Product actually Installed.

2. Changes made by Modification or field order.

3. Other matters not originally specified.

E. Annotate Shop Drawings to record changes made after review.

1.04 SUBMITTALS

A. At closeout of the Contract, deliver Project record documents to Project Manager.

PART 2 P R O D U C T S - Not Used

PART 3 E X E C U T I O N - Not Used

END OF SECTION

SECTION 02371(Large Diameter)

EROSION CONTROL AND VEGETATION MAT

PART 1 GENERAL

1.01 SECTION INCLUDES

A. Installation of erosion control and vegetation mat for disturbed areas that are seeded.

1.02 PAYMENT

A. No separate payment will be made for erosion control and vegetation mat. Include cost in unit price for regrading existing ditches.

1.03 DESCRIPTION

A. Mat shall cover newly seeded and fertilized ground, and shall be held in place with netting and staples driven into ground.

B. Mat shall assist in germination of grass seedlings and protect seedlings and establish vegetation.

C. Mat shall be specifically designed for use on steep slopes and other hard-to-hold problem areas.

D. Mat shall help ground retain moisture, control surface temperature fluctuations of soil, conform to terrain, protect seedlings against sun burnout, and break up raindrops to prevent erosion.

E. Wood fibers of blanket ultimately shall attach to soil, stabilize terrain, and act as mulch after vegetation has started.

F. Netting shall degrade in time in sunlight.

PART 2 PRODUCTS

2.01 MATERIALS

A. Erosion Blanket:
   1. Machine produced mat consisting of 100 percent wood with 80 percent 6-inch or longer fiber length, with consistent thickness and fiber evenly distributed over entire area of blanket.

2. Topside of blanket shall be covered with 3/4-inch by 3/4-inch mesh of biodegradable netting.
3. Blanket shall be made smolder-resistant with use of chemical additives.

B. Staples:
1. 11-gauge biodegradable steel.
2. "U" shaped with legs 6 inches in length and 1-inch crown.

2.02 ACCEPTABLE PRODUCT

A. Standard Excelsior Erosion Control Blanket; Erosion Control Systems, Inc.

PART 3 EXECUTION

3.01 PREPARATION

A. Properly cultivate, seed and fertilize area to be covered in compliance with Section 02921 - Hydromulch Seeding.

B. Apply blanket immediately over prepared ground.

3.02 APPLICATION

A. Unroll blanket over prepared area; keep netting on top and fibers in contact with soil over entire area.

B. Apply blankets in ditches in direction of water flow.

C. Butt edges snugly (overlap maximum 2 inches) and fasten to ground with staples driven into ground.

D. Engage portion of netting with staple and set flush with soil surface.

E. Use average of 1 to 1-1/2 staples per yard and maximum of 1-1/2 feet distance between staples at ends. Follow stapling procedure as recommended by manufacturer.

F. Individual blanket size: 7.5 feet by 96 feet (80 square yards) with weight of 68 pounds plus or minus 1 pound.

END OF SECTION

Section 02425(Large Diameter)

TUNNEL EXCAVATION AND PRIMARY LINER FOR WATER MAINS

PART 1 GENERAL

1.01 SECTION INCLUDES

A. Tunnel construction operation with primary lined tunnel installed during tunnel drive followed by placement of water line inside tunnel after completion of tunnel construction. This Specification is intended to be primarily functional in nature and to define in general terms work to be accomplished. Contractor granted full discretion to select method of tunnel construction, subject to review by City Engineer.

1.02 MEASUREMENT AND PAYMENT

A. No separate payment will be made for other work performed under this Specification such as excavation, liner, grouting, or instrumentation. Include cost of such other work in contract unit prices for items listed in bid form for Section 02517 - Water Main in Tunnels.

B. Where such effort is necessary, cost for ground water control during course of tunnel work included in unit prices for water main in tunnel.

C. Ground water control required during course of Project to lower water table for other utility installation, to remove standing water, surface drainage seepage, or to protect ongoing work against rising waters or floods considered incidental to work being performed.

1.03 REFERENCE STANDARDS

A. The publications listed below form part of this specification to extent referenced. publications are referred to in text by abbreviations only.

1. AREMA Manual for Railway Engineering (Applicable sections).

2. American Association of State Highway and Transportation Officials (AASHTO).

3. American Society for Testing and Materials (ASTM).

   a. ASTM A36 - Standard Specifications for Carbon Structural Steel.

   b. ASTM A82 - Standard Specifications for Steel Wire, Plain, for Concrete Reinforcement.

   c. ASTM A185 - Standard Specifications for Steel Welded Wire Fabric for Concrete Reinforcement.

d. ASTM A283 - Standard Specifications for Low and Intermediate Tensile Strength Carbon Steel Plates.

e. ASTM A307 - Standard Specifications for Carbon Steel Bolts and Studs, 60,000 PSI Tensile Strength.

f. ASTM A328 - Standard Specifications for Steel Sheet Piling.

g. ASTM A496 - Standard Specifications for Steel Wire, Deformed, for Concrete Reinforcement.

h. ASTM A615 - Standard Specifications for Deformed and Plain Billet-Steel Bars for Concrete Reinforcement.

i. ASTM C33 - Standard Specification for Concrete Aggregates.

j. ASTM C150 - Standard Specifications for Portland Cement.

4. American Water Works Association (AWWA)

a. AWWA C200 - Steel Water Pipe 6-inches and Larger.

5. Occupational Safety and Health Administration (OSHA): Particular attention is called to Subpart S of OSHA Standards (29 CFR 1926/1920), published as U.S. Department of Labor Publication 2207, Revised Oct. 1, 1979. Second revision dated August 1, 1989. See Federal Register dated June 2, 1989 for revised standard and commentary.

1.04 DEFINITION

A. Tunneling Work Plan defined as written description together with sketches, drawings, schedules, and other documents defining Contractor's planned methods and procedures to construct referenced item. Contractor's Construction Drawings defined as drawings by which Contractor proposes to furnish, construct, install, and operate referenced item. Submission of Tunneling Work Plans, including construction drawings, required for providing City Engineer sufficient details to verify that Contractor's planned work and work in progress is in accordance with intent of design and specification requirements.

B. Primary Liner defined as Contractor's initial construction liner and tunnel support installed by Contractor for ground stability and safety during construction preparatory to installation of water line. Contractor chooses method of construction in accordance with this Specification. Inclusion of various methods in specification or reviews by City Engineer of Contractor's submittals shall not be construed by Contractor as endorsement by City Engineer that all such methods are constructible or will work for specific subsurface soils encountered.

C. Carrier Pipe is referred to as water line or permanent (secondary) liner. Such water line/permanent liner defined and installed in accordance with Section 02517 - Water Main in Tunnels or Section 02511 - Water Mains.

1.05 SUBMITTALS

A. Review: Conform to requirements of Section 01330 - Submittals Procedures. City Engineer will review submitted plans, details and data for compliance with requirements of Specification. Such review shall not be construed to relieve Contractor of responsibilities under Contract. Contractor shall not commence work on items requiring Contractor's work plan, construction drawings or other submittals until submittals have been reviewed and accepted by City Engineer. All structural designs and other engineered components signed and sealed by Professional Engineer registered in the State of Texas.

B. Tunneling: Submit for review Tunneling Work Plan with complete construction drawings, complete written description identifying details of proposed method of construction and sequence of operations to be performed during construction, as required by method of tunnel excavation and liner installation. Sufficiently detail construction drawings and descriptions detailed to demonstrate to City Engineer whether proposed materials and procedures will meet requirements of Specification.

1. Depending on Contractor's method of construction, submit Contractor's work plan and construction drawings on following items:

a. If use of mechanized excavating equipment (such as TBM or shielded excavators) is proposed, submit arrangement drawings and technical specifications of machine and trailing equipment (included modifications), experience record with this type of machine of both Contractor and proposed operator and copy of manufacturer's operation manual for machine.

b. The Contractor may elect to use tunnel shield that is separate from mechanized excavation equipment or for use with hand excavation. When use of tunnel shield is proposed, submit arrangement drawings, design criteria, dimensional data and method of excavation and operation of shield, including acceptable method for supporting, controlling and closing face of heading.

c. Complete details of equipment, methods and procedures to be used for ground support, including but not limited to primary liner installation, timing of installation in relation to excavation plan, bulkheads and equipment.

d. Grouting techniques meeting requirements this Section and Section 02431 - Tunneling Grout.

e. Procedures for measuring excavation quantities versus forward progress during tunneling operation (for earth pressure balance TBM only).

f. Method of controlling line and grade of excavation.

g. Details of muck removal, including equipment type, number and disposal location.

h. Description of ventilation system, lighting system, and electrical system.

i. Proposed contingency plans for critical phases and areas of tunneling.

2. Submit for review design criteria established by Contractor's Engineer for primary liner, including design calculations and installation details, and certification by qualified Engineer Registered in the State of Texas that structural design of primary tunnel meets criteria and specified requirements for range of field conditions.

3. Include in work plan special activities at critical utility crossings, or for work potentially effecting other facilities and existing installations, where special precautions must be taken during construction.

4. Submit for review layout and design of proposed access shafts and shafts for permanent installations in accordance with Section 02400 - Tunnel Shafts.

5. Ground water control system per requirements in this Section and in accordance with Section 01578 - Control of Ground Water and Surface Water, as required by construction method.

6. All structural designs and other engineered items signed and sealed by qualified Professional Engineer Registered in the State of Texas unless otherwise specified.

C. Quality Control Methods: At least 30 days prior to start of tunneling, submit description of quality control methods he proposes to use in this operation to City Engineer. Include in submittal:

1. Supervision: Supervisory control to ensure that work is performed in accordance with Drawings and Specifications and Contractor's work plan and construction drawings.

2. Line and Grade: Procedures for surveying, controlling and checking line and grade, including field forms for establishing and checking line, and grade.

3. Tunneling Observation and Monitoring: Procedures for preparing and submitting daily logs of tunneling operations, including field forms, to meet requirement of Paragraphs 3.06, Tunneling Data and Paragraph 3.07, Control of Tunnel Line and Grade.

4. Monitoring Instrumentation: Conform to requirements of Paragraph 3.09A, Monitoring Instrumentation.

a. Name of instrument installation subcontractors.

b. Layout of instrumentation points.

c. Procedures, forms and schedules for periodic submittals of readings.

5. Settlement Survey Plan, to meet requirements of Paragraph 3.09C, Settlement Surveying. This plan may be submitted as part of Instrumentation Monitoring Plan.

6. Building Condition/Assessment Plans: Conform to requirements of Paragraph 3.09B, Buildings and Structures Assessment.

D. Geotechnical and Environmental Investigation: Include results of geotechnical and environmental investigations performed by Contractor as relevant to tunneling in Work Plan.

E. Safety: Submit procedures to meet all applicable OSHA requirements including the following as minimum: Submit these procedures for record purpose only and they will not be subject to approval by City Engineer.

1. Protection against soil instability and ground water inflow.

2. Safety for shaft access and exit including ladders, stairs, walkways, and hoists.

3. Protection against mechanical and hydraulic equipment operations, and for lifting and hoisting equipment and material.

4. Ventilation, lighting, and communication systems.

5. Monitoring for hazardous gases.

6. Protection against flooding.

7. Means for emergency evacuation.

8. Protection of shaft including traffic barriers, accidental or unauthorized entry, and falling objects.

9. Emergency protection equipment and self-rescue equipment.

10. Safety supervising responsibilities.

1.06 DESIGN CRITERIA

A. Design primary liner for appropriate loading conditions, including but not limited to: overburden and lateral earth pressures, handling and installation stresses, loads imposed by tunnel shield or tunnel boring machine thrust jacks, subsurface soil and water loads, grouting,

and all other conditions of service. Contractor responsible for design of primary liner to carry thrust of jacking or other construction forces or loads anticipated.

B. Use Cooper E-80 locomotive loading distributions in accordance with AREA specifications for culverts for criteria at railroad crossings. Account for additive loadings for multiple tracks in design. Provide liner type for railroad crossings as specified or as otherwise required by railroad authority. Acceptable monitoring devices, such as closed circuit television, which permit continuous monitoring of conditions at face by qualified observers, from outside tunnel, may be used.

C. Use HS-20 vehicle loading distributions for truck loading criteria in accordance with AASHTO.

D. Compatibility of Methods:

1. Use compatible methods of excavation, liner, and ground stabilization and ground water control.

2. Design primary lining, when used to provide thrust for propulsion of shield, to withstand this thrust without damage or distortion. Configure propulsion jacks on shield so that thrust is uniformly distributed and will not damage or distort primary liner.

3. Use compatible tunneling method with possible restrictions on work, such as influence on existing installations or potential ground water contamination.

1.07 JOB CONDITIONS

A. Safety Requirements:

1. Perform work in manner to maximize safety and avoid exposure of men and equipment to hazardous and potentially hazardous conditions, in accordance with applicable safety standards and Contractor's safety procedures.

2. Whenever there is emergency or stoppage of work which is likely to endanger tunnel excavation or adjacent structures, operate full work force for 24 hours day, including weekends and holidays, without intermission until potentially hazardous conditions no longer exist or jeopardize stability and safety of work or existing installations.

3. Perform tunnel construction in manner that will minimize movement of ground in front and surrounding tunnel. Prevent significant subsidence of surface and protect structures and utilities above, and in vicinity of, tunnel from damage.

4. Support ground continuously in manner to prevent loss of ground and keep perimeters and faces of tunnel and bottoms of shafts stable. Use filter-fabric and other means as necessary behind primary liner to prevent soil migration into tunnel.

B. Surveillance of Headings: When Contractor is not able to close face of machine because of maintenance requirements, maintain qualified personnel on duty to observe conditions that might threaten stability of heading whenever tunnel excavation is suspended or shut down. Equip personnel with approved contingency plan to take appropriate action to prevent or limit damage should conditions which threaten stability of heading occur.

C. Air Quality:

1. Conduct tunneling operations by methods and with equipment which will positively control dust, fumes, vapors, gases or other atmospheric impurities in accordance with OSHA, Federal, State and City requirements.

2. Provide approved mining instrumentation for testing quality of tunnel atmosphere and obtain samples, under working conditions, at prescribed intervals in accordance with above referenced requirements. Submit results of air quality tests to City Engineer.

D. Ground Conditions: Perform sufficient exploration by geotechnical and environmental borings in advance of construction to define necessary parameters for design of primary tunnel liner, planning and designing ground water control system, and for selection of tunneling method and equipment to successfully complete each tunnel reach. Present results of Contractor's geotechnical and environmental investigations in related work plans.

PART 2 PRODUCTS

2.01 GENERAL

A. Use of various construction methods for tunnel excavation and ground support, such as by tunnel boring machine (TBM), hand tunneling or shield will be allowed, provided it can be demonstrated to City Engineer that proposed method will complete Project in accordance with Specifications, this Section, applicable safety codes, and Project schedules.

1. Contractor's Engineer responsible for design of primary tunnel liner system.

2. Contractor responsible for final constructed product, materials and tools used, and for furnishing labor and qualified superintendents necessary for selected method of construction.

3. Demonstrate that chosen method will prevent flow of water or soil into tunnel and provide stability of face under anticipated conditions.

B. Use tunnel liner or casing of size so that minimum clearance between bottom of carrier pipe and inside of liner is minimum 4 inches, and minimum clearance between top of pipe and inside of liner or casing is in accordance with following:

Carrier Pipe Net I.D.	Minimum Clearance to Top
≥ 48"	9"
42"	7"
36"	5"
≤ 30"	3"

This clearance also applies to distance between carrier pipe and electrical conducting pipe support system.

C. Furnish all items, such as TBM or shield with excavation equipment, spoil disposal systems, muck trains, hoist, grouting, signal systems, ventilation, safety equipment, and survey controls necessary to excavate and advance tunnel and construct primary tunnel liner by selected method.

2.02 LINER AND SUPPORTS

A. The primary tunnel liner may consist of steel ribs and lagging, steel liner plates, precast concrete segments, steel casing pipe, or combinations of these. Lagging may be timber or steel. Box tunnels with timber supports or steel sets with timber lagging may be constructed when ground conditions are suitable. Utilize additional support elements including shotcrete, additional steel sets, breasting, spilling, forepoling, crown bars, soil anchors, or fabrics, as required to provide safe, stable excavation.

B. Use steel liner plates, steel casing or steel lagging with steel ring beams as primary liner for tunneling under Texas Department of Transportation rights-of-way. Use steel casing as primary liner for tunneling under railroad rights-of-way. Timber lagging or timber falsework permitted in tunnels at other locations as shown on Drawings.

C. Use steel casing as primary liner for tunneling in fault zone crossings.

2.03 MATERIALS

A. Where use of following materials is required, conform to requirements of following minimum standards:

Material	Reference Standards
Cement	ASTM C150
Structural Concrete	See Section 03300
Reinforcing Steel Wire	ASTM A82 or A496
Reinforcing Steel Wire Fabric	ASTM A185 or A497
Reinforcing Steel Bars	ASTM A615, Grade 60
Sand and Aggregate	ASTM C33
Structural Steel	ASTM A36

Steel Piles, Sheets	ASTM A328
Rings and Ribs	ASTM A36
Steel Plates	ASTM A36 and A283
Lumber and Timber	Hardwood, sound or better, as defined by Commercial Standard C560
Steel Casing Pipe	AWWA C200

2.04 STEEL LINER PLATES

A. Except as otherwise specified, furnish materials according to applicable requirements of AREMA Manual for Railway Engineering.

B. Bolts and nuts: Conform to ASTM A307, Grade A. Use bolts no less than 1/2 inch in diameter for plate gauge 7 or thinner and no less than 5/8 inch in diameter for greater plate thicknesses.

C. Punch plates for bolting on both longitudinal and circumferential seams and fabricate to permit complete erection from inside tunnel. Use plates of uniform fabrication and use interchangeable plates for those intended for one size tunnel .

D. Use new material for construction of liner plates. City Engineer, at his option, may allow used plates provided that thickness of used plates after removal of rust is, at minimum, equal to thickness of new plates suitable for use on this Project; shape and dimensions meet acceptance tolerance for new plates; and used plates are free from other defects. City Engineer will determine acceptability of used plates.

E. Provide steel liner plates manufactured by Contech Construction Products (2-flange), Commercial Pantex Sika, Inc. (4-flange), or approved equal, and certified by manufacturer of compliance with specifications. Provide tensile strength, yield strength and minimum elongation of liner plates. Also, provide design calculations for either 2-or 4-flange liner plates, as appropriate for Contractor's method of construction. All steel liner plate designs shall meet following minimum factors of safety:

Seam Strength = 3
Buckling = 2
Maximum Deflection = 2% (of normal tunnel diameter)

F. Maintain minimum thickness of metal for these steel plates as shown on drawings, allowing for standard mill tolerances.

G. Equip steel liner plates with approximately 2-inch-diameter grout holes furnished with plugs. Locate holes near plate centers, such that when plates are installed there will be one line of holes along crown and along each side of tunnel, not more than 18 inches above invert. Locate holes in each line at no more than every other plate and stagger.

H. Protective coating not required for steel liner plates, unless otherwise specified or shown on Drawings.

I. Install gaskets between liner plates when required to control seepage, or as specified or shown in Drawings.

J. Steel ribs used with liner plates: Conform to requirements of Paragraph 2.05, Steel Beams and Lagging.

2.05 STEEL CASING PIPE

A. Casing pipe: Provide new uncoated welded steel pipe, manufactured in accordance with AWWA C200.

B. Design stress in pipe wall shall be 50 percent of minimum yield point of steel or 18,000 psi, whichever is less when subjected to loading conditions.

C. Design deflection to be used in determining wall thickness shall not exceed 3 percent of nominal casing pipe size.

D. Bedding constant to be used in determining wall thickness shall be 0.10. Lag factors shall be 1.0 for all live loads.

E. Minimum thickness of steel casing shall be as shown on drawing. When casing is installed without benefit of protective coating, and said casing is not cathodically protected, increase wall thickness shown on drawings to nearest standard size, which is minimum of 0.0633 inches greater than thickness shown except for diameters under 12-3/4 inches.

F. Casing pipe design shall also include stresses due to jacking forces when pipe is to be installed by jacking method.

G. Equip casing pipe with approximately 2-inch diameter grout holes furnished with plugs. Place holes in pattern so that each succeeding hole from top dead center is 60 degrees right, then 60 degrees left, then top dead center. Locate holes in each line no more than 9 feet apart.

H. Conform casing pipe used in fault zones to welding and weld testing requirements specified in Section 02502 - Steel Pipe and Fittings.

I. Casing pipe used in fault zones must be plugged at each end with clay bricks around O.D. of pipe minimum of one foot thickness measured into casing to prevent infiltration of soil into annular space.

2.06 STEEL BEAMS AND LAGGING

A. Steel ribs and auxiliary structural members shall be free of defects which may impair or reduce their structural integrity. Ribs shall be accurately curved to proper radius of tunnel section (or

shaft section) and rib segments shall fit closely for bolted connections at segmental and transverse joints. Provide steel appurtenances required for installation of ribs such as tie road, bolts, splice plates, dutchmen and drift pins, with ribs.

B. Minimum factors of safety:

Buckling = 2
Stiffness = 3

2.07 FILTER FABRIC

A. See Section 02621 - Geotextile for requirements of material and minimum installation requirements. Install fabric, and backer rods, as required to prevent loss of fine-soil sediments into tunnel.

2.08 TIMBER

A. Use new timber for primary liner ground support without defects, of true dimensions and of quality grade and wood type defined by Contractor's Engineer.

PART 3 EXECUTION

3.01 PREPARATION

A. Contractor shall be responsible for his means and methods of tunneling construction and shall ensure safety of work, Contractor's employees, public, and adjacent property, whether public or private.

B. Execute work of excavating, lining, grouting, and construction of tunnel so that ground settlement or loss will be minimized. Completed primary tunnel lining shall have full bearing against earth with no voids or pockets left in work. Fill peripheral space between support elements and excavated surface no less frequently than after each shore or close by expanding support elements against ground as shield advances.

C. Maintain clean working conditions inside tunnel and remove muck, debris, material spills, unusable supports, and other material not required for tunneling.

D. Be aware that various existing soil borings, piezometers, or instrument wells may coincide with proposed tunnel alignment. These may or may not have been backfilled with grout and therefore caution should be used in tunneling through these existing borings. Take mitigating measures to counter effect these boreholes, piezometers, or instrument wells may have on tunneling operations.

E. Perform tunneling under railroad embankments, highways, or streets to prevent interference with operation of railroad, highways, or streets.

F. Do not perform any surface activities pertaining to water line construction within a tunnel area unless otherwise approved by City Engineer.

3.02 GROUND WATER CONTROL AND GROUND STABILIZATION

A. Provide necessary ground water control measures to perform work and to provide safe working conditions. Prevent excessive inflow of water into excavation during construction of tunnel and installation of carrier pipe and grouting of annular space. Ground water control method shall provide means to prevent piping of fines into shafts or tunnel and other adverse effects due to ground water inflow. Additional requirements are included in Section 01578 - Control of Ground Water and Surface Water. Other methods of construction, including tunnel work under compressed air, may be considered when Contractor is able to demonstrate that it will prevent flow of materials or water into tunnel excavation and allows construction of work to meet requirements of drawings and specifications. Additional requirements are included in Section 01578 - Control of Ground Water and Surface Water.

B. Anticipate that portions of tunnel excavation may be below ground water table and in cohesionless soils, even when not indicated on soil borings, and in conditions which may require ground water control system for tunneling operations. Install filter fabrics, backer-rods and other means as necessary to prevent piping of fines into tunnel. Remove water that may be encountered during course of work by pumping, well pointing, deep well pumping, or other means determined by Contractor as necessary to achieve stable conditions and applied in manner as described in Section 01578 - Control of Ground Water and Surface Water. Standing water not permitted at face, in tunnel or shafts.

C. The ground water control method used shall not cause damage to adjacent structures or property due to lowering of water table and subsequent ground settlement. In event damage does occur, correct damage and settle claims arising from damage.

D. If Contractor chooses pumping installations to control ground water level or installs pervious liner through water bearing layers, install and maintain instrumentation system to monitor water level and to detect movement in adjacent structures and property. Monitor water level by recording initial water level before dewatering is started and thereafter on weekly basis. Remove water monthly from piezometers to demonstrate that they are operable. Submit weekly reports of water levels to City Engineer. Provide access to piezometers for City Engineer to perform independent measurements.

E. Maintain dewatering system for tunnels in continuous operation until minimum of 48 hours after carrier pipe has been installed and annular space is fully grouted, or until watertight liner designed for hydrostatic pressures is installed.

F. If eductors, well points or deep wells are used, space them adequately to provide necessary dewatering. Use sand packing, and other means to prevent pumping of fine sands or silts from subsurface and to minimize ground subsidence. Check continuously to ensure that subsurface soil is not being removed by ground water control operation or subsurface drainage

into shafts or through pervious liner. Before operations begin, maintain availability of pumping equipment and other machinery on site to assure that operation of dewatering system can be maintained.

G. When groundwater control is necessary, do not begin tunneling operations until monitoring data shows that it is safe to do so. When dewatering is sole means of ground water control, draw piezometric level at least down below elevation of invert of tunnel, or to lower elevation as required for excavation face and tunnel stability.

3.03 EQUIPMENT

A. Tunneling method or equipment which Contractor can demonstrate based on past experience will produce specified results for soils encountered will be considered. However, use tunneling method, whether hand or machine, with full-face closure capabilities.

B. Diesel, electrical, hydraulic, or air-powered equipment will be acceptable, subject to applicable Federal and State regulations. Diesel engines equipped with scrubbers are acceptable only when tunneling in free air with adequate ventilation. Provide compressed air and electricity for Contractor's operations from source outside tunnel.

C. Tunnel Boring Machine: When tunnel boring machine is used, employ equipment that will be capable of handling various anticipated ground conditions. In addition, TBM shall:

1. Be capable of minimizing loss of ground ahead of and around machine and providing satisfactory support of excavated face. Use TBM with, when necessary for ground control, earth-pressure balance or slurry-shield capabilities.

2. Conform to shape of tunnel with uniform perimeter that is free of projections that could produce over-excavation or voids. TBM shield shall be continuous around its full perimeter; open-bottom shield is not acceptable.

3. Have tail section long enough to enable setting of initial supports within machine, while still providing at least 12-inches of overlap beyond last installed support elements when thrusting jacks are extended to fullest extent possible.

4. Have propulsion jacks capable of moving machine in forward direction while maintaining construction tolerances with respect to line and grade, without damage to previously-installed tunnel supports. Design propulsion system so that in event of failure of any element of system, there is no movement backward and there is no overstressing or distortion of tunnel supports.

5. Incorporate seal in TBM tail shield to prevent leakage of grout between shield and liner into tunnel space, when grout is required immediately behind shield.

6. Have motors and operating controls protected against water inflow.

7. Provide bi-directional drive on cutter head wheel, or fins or grippers to control roll due to rotation.

8. Provide means for maintaining tunnel face under wet and adverse soil conditions. Use closure doors on cutter wheel or other means, such as earth-pressure balance or slurry shield, acceptable to City Engineer.

D. Tunnel Shield: tunnel shield is used (with or without attached mechanized excavating equipment),employ shield that will be capable of handling various anticipated ground conditions. In addition, shield shall:

1. Conform to shape of tunnel with uniform perimeter that is free of projections that could produce over excavation or voids. Appropriately sized overcutting bead or taper along length of shield may be provided to facilitate steering. Shield shall be continuous around its full perimeter; open bottom shield is not acceptable. Although it is recognized that capability to over excavate beyond perimeter of shield may be necessary under certain conditions, make provisions to prevent accidental over excavation.

2. Have hood, poling or breasting plates, shelves and breast jacks, breast tables, and combinations of these and other bracing as necessary to fully support face of tunnel excavation without loss of ground.

3. Have tail section long enough to enable setting of initial supports within shield while still providing at least 12-inches of overlap beyond last-installed support elements when shield has been pushed forward to fullest extent possible.

4. Have propulsion system for moving shield in forward direction, while maintaining construction tolerances with respect to line and grade, without damage to previously-installed tunnel support. Design propulsion system so that in event of failure of any element of system, there is no movement backward and there is no overstressing or distortion of tunnel supports.

5. Have motors and operating controls protected against water inflow.

6. Incorporate seal in tail of shield to prevent leakage of grout between shield and liner into tunnel space, when grout is required immediately behind shield.

E. Air Quality: Provide equipment to adequately ventilate entire tunnel operation during construction.

1. Provide portable testing equipment for carbon monoxide gas, hydrogen sulfide gas, oxygen deficiency, and explosive gases. Monitoring for other constituents may be required while tunneling in potentially contaminated areas as defined in Contractor's safety plan.

2. Provide audible automatic gas alarm on TBM to detect explosive gases Locate alarm near tunnel face.

3. Equip motors and controls with automatic shutoff methane monitoring system.

F. Lighting: Provide adequate lighting with lights at 50 feet, maximum spacing in tunnel. Fixtures shall be in watertight enclosures with suitable guards. Provide separate circuits for lighting and for electrical equipment.

G. Electrical: Equip electrical systems utilized on TBM with appropriate ground fault system. Electrical systems are to be insulated, not permitting bare-wire exposures.

H. Access: Provide safe access through tunnel to TBM.

1. Provide walkway in tunnels greater than 10 feet in diameter which is separate from tracks used by spoil removal equipment.

2. Equip locomotives or cars used for transport of personnel with necessary safety devices.

I. Necessary equipment for tunnel excavation includes telephones, signal systems, fire extinguishers, safety equipment, and other equipment required by Contractor's method of construction, work plan and safety plan. Maintain equipment in good repair, and readily available at place of work.

3.04 SHAFTS

A. Construction of Shafts: Conform work for all shafts, with or without permanent structures in them, to requirements of Section 02400 - Tunnel Shafts. Contractor responsible for selecting shaft locations in agreement with his planned method of tunneling and for sizing shafts.

3.05 TUNNEL EXCAVATION AND PRIMARY LINER INSTALLATION

A. Tunnel Excavation:

1. Methods of tunnel excavation at Contractor's option, subject to review of City Engineer.

2. Conduct tunneling operations in accordance with applicable safety rules and regulations, and Contractor's safety plan. Use methods which include due regard for safety of workmen, adjacent structures, utilities, and public.

3. Limit tunnel excavation to within easements and rights-of-way indicated on Drawings, and to lines and grades designated on Drawings. Perform excavation of sufficient size to allow installation of water line to lines and grades indicated on Drawings.

4. Locate equipment powered by combustible fuels at suitable distances from shafts to prevent possibility of explosion and fire in shafts or tunnel.

5. During open-face excavation:

   a. Excavate face commencing at crown and proceed down to invert. Excavate both sides of heading simultaneously. Keep hood buried in soil ahead where soils include sands and silts.

   b. Keep face breasted or otherwise supported; employ other means as necessary to maintain face stability and prevent falls, excessive ravelling, or erosion. Maintain standby face supports for immediate use when needed.

   c. During shut-down periods, support face of excavation by positive means; do not rely solely on hydraulic pressure for support. When face is untouched for more than 24 hours, and when required by City Engineer, fully breast face and shove shield tight against it.

6. During closed-face excavation:

   a. Carefully control and monitor volume of spoil removed. For earth-pressure balance TBM, balance spoil removed with advance rate and excavation rate.

   b. When cutting face is withdrawn, keep excavated face stabilized as required.

7. Advancing Shield: During forward movement of shield, provide sufficient support at excavation face to prevent movement of materials except materials as are physically displaced by elements of shield itself.

B. Size of Tunnel: Determine adequate tunnel size and section to match construction methods described in work plan. Build tunnels of sufficient size to permit efficient excavation operations, to provide sufficient working space for placing primary tunnel liner, and to allow for installation of water line as shown on Drawings or indicated in Specifications. Dimensions shown on Drawings represent minimum dimensions acceptable to City Engineer and do not necessarily represent size or section suitable for construction methods or operational procedures as may be proposed or conducted by Contractor.

C. Primary Liner:

1. Provide primary liner for tunnel which is capable of supporting ground, and hydrostatic forces until permanent water pipe has been installed and grouted in place, and to resist construction loads.

2. Use methods that ensure full bearing of soil against primary liner without significant settlement or movement of surrounding soil. To fill void behind primary liner, either expandable liner (e.g., ring beams and timber lagging) or nonexpandable liner (e.g., bolted steel liner plates) may be used provided grout is placed behind nonexpandable

liner. Box tunnel where ground is excavated to true shape may be ungrouted. Grout excavation not to true shape as result of careless excavation or loss of ground.

3. The primary liner's seepage inflow for each 100-foot length of tunnel shall not exceed 3 gallons per minute, including inflow through face or shield. Localized inflow shall not exceed 0.5 gallons per minute. Provide drainage facilities to remove inflow of water from tunnels and shafts. Provide means to prevent inflow of soil fines associated with water inflow by use of filter fabrics or other approved methods.

4. Expandable liner shall be continuous and shall be expanded to limits of excavation promptly after it is out of shield.

5. During excavation of tunnel, advance TBM or shield only far enough to permit construction of one primary liner ring beam set, or rings of bolted steel liner plates that can be assembled entirely within tail shield of TBM.

6. Install filter fabric around exterior of primary liner when using non-watertight liner and when tunneling through sandy or silty ground conditions. Install backer rods at ribs as required to control migration of fines. Close windows in lagging.

7. Provide hog rods, struts or similar members when required to maintain roundness. After grouting liner shall be no more than 3 percent out of round as measured by difference between maximum and minimum measured diameter divided by average diameter.

D. Hand Jacking of Casing:

1. Provide heavy-duty jacks of capacity suitable for forcing casing pipe through ground. Construct operating jacks so that even pressure is applied to all jacks used. Provide suitable jacking head, (timber, etc.), and suitable bracing between jacks and jacking head. Provide suitable jacking frame and/or back stop. Set casing pipe to be jacked on guides, (timber, etc.), properly braced together, to support section of pipe and direct it to proper line and grade. Place whole jacking assembly so as to line up with direction and grade of casing pipe.

2. Excavate ground material just ahead of casing pipe by use of air-powered tools, excavating machine or other acceptable means, and remove through casing pipe. Then force casing pipe through ground with jacks, into space thus provided. Dispose excavated material as specified.

3. Trim excavation in manner so that at least one third of circumference of excavation conforms to contour and grade of casing pipe. Provide clearance of not more than 2 inches for upper half of casing pipe with clearance tapering off to zero at point where excavation conforms to contour of casing pipe. cutting edge of steel plate installed around head end of casing pipe extending short distance beyond end of casing pipe with

inside angles or lugs to keep cutting edge from slipping back onto casing pipe may be used.

4. In addition to requirements set for in this specification, Contractor shall:

   a. Excavate face commencing at crown and proceed down to invert. Excavate heading so that both sides of heading are excavated simultaneously.

   b. At all times maintain standby face supports to allow for immediate use when needed.

   c. At end of each shift and whenever excavation is suspended or shut down, install breast boards, or other approved methods, across full face of heading.

5. Distance that excavation extends beyond end of casing pipe shall not exceed three feet. Decrease this distance as directed by Engineer, or due to character of material being excavated.

6. The casing pipe, insofar as practical, jack from low or downstream end. Lateral or vertical variation in final position of casing pipe from line and grade as established by Engineer will be permitted only to extent of 1 inch in 10 feet, provided that variation is regular and only in one direction and that final grade of flow line is in direction indicated on plans. Remedy overcutting by pressure grouting entire length of installation. Use of grout mix immediately behind shield tail shall have efficient tail seal to prevent flow of grout into shield.

7. Depending on character of soil encountered during jacking operation, carry on operation without interruption, insofar as practical, to prevent casing pipe from becoming firmly set in ground.

8. Remove and replace casing pipe damaged in jacking operations by Contractor at no additional cost to Owner.

9. Backfill pits or trenches which have been excavated to aid jacking operations as soon as casing pipe is complete in place, equipment and appurtenances have been removed and structure, which is to be built in excavated zone, is in place. In no case shall pits remain open without appropriate safety barricades, concrete traffic barriers (CTB's), railing or plates.

10. When jacking casing pipe, water jetting of casing pipe bedding or backfill is not allowed. In unconsolidated soil formations, use gel-forming colloidal drilling fluid consisting of at least 10 percent of high grade fully hydrated bentonite to seal voids outside walls and furnish lubrication for installation of casing pipe.

E. Grouting:

1. Furnish and operate suitable equipment for grouting operations to effectively and completely fill voids outside of primary tunnel liner as quickly as possible.

2. Additional requirements pertaining to grout mix design and tunnel grouting are provided in Section 02431 - Tunneling Grout.

3. Provide in tunneling work plan description of primary liner grouting operations, including:

   a. Arrangement of grouting equipment including mixer, pumps, piping and hoses, valves, pressure gauges and injection fixtures.

   b. Location, spacing and size of grout ports and vents.

   c. Grouting sequence for initial backfill of voids between liner and ground, and for second stage back grouting.

   d. Grout injection pressures and estimated volumes.

   e. Procedure to check for remaining voids.

   f. Sampling procedures and locations for quality control testing.

   g. Grout production and quality shall be in accordance with Contractor's mix design and grout production plan as required by Section 02431 - Tunneling Grout.

4. Use care in grouting operations to prevent damage to adjacent utilities or other properties. Ensure that pressure used in grouting is not great enough to distort or imperil work.

5. Fill voids behind nonexpandable primary liner with sand-cement grout promptly after liner is out of shield. Grout pressure shall not exceed value that may cause damage or distortion to installed liner plate rings. Grout from bottom up and plug each grout hole promptly after grout has been placed. Provide seals on tail of TBM which will prevent grout from moving into shield.

6. Liner requiring grout shall be back grouted (second stage grouting) once each shift, or more often when required to ensure that all voids are filled.

7. Place grout behind tunnel liner at end of each day or at every 10 feet of tunnel installed, whichever is less, unless in opinion of Engineer, ground conditions are such as to require each ring to be grouted immediately after erection. Upon completion of each grouting operation, sound primary liner and immediately correct voids discovered by necessary means as approved by Engineer. After all voids are successfully filled, grout

holes will be packed, when necessary, with dry mortar mix and threaded taps securely placed in holes.

8. Completely and immediately fill voids outside limits of tunnel excavation created by caving or collapse of earth cover over excavation, or by other cause, with sand cement grout. Perform second grouting to fill soft spots or voids which may be detected, no later than 24 hours after initial grouting of primary liner.

9. Perform quality control sampling and testing of grout.

   a. Grout production shall be in accordance with Section 02431 - Tunneling Grout.

   b. Measure density of grout throughout placement procedure as directed by City Engineer. Measure grout density at discharge point and discharge grout until density is within 0.3 pounds per gallon of input density.

   c. Take samples of well-mixed grout for 28-day compressive strength tests at beginning, middle and end of each grouting operation.

3.06 TUNNELING DATA

A. Submit shift logs of construction events and observations within 24 hours of operation on at least following:

1. Location of face by station and progress of tunnel drive during shift.

2. Observation of lost ground and other signs of ground movement.

3. Location and elevation of significant soil strata boundaries and brief soil descriptions.

4. Ground water control operations, piezometric levels, ground water inflow location and rates.

5. Completed field forms for establishing and checking line and grade and achieved tolerance relative to design alignment.

6. Operation shut-down periods or other interruptions in work, and reason.

7. Any unusual condition or event.

B. Clearly mark primary liner every 20 feet along tunnel with distance in feet from centerline of preceding shaft.

3.07 CONTROL OF TUNNEL LINE AND GRADE

A. Construction Control:

1. The City Engineer will establish baseline and benchmarks indicated on Drawings. check these baseline and benchmarks at beginning of work and report errors or discrepancies to City Engineer.

2. Use baseline and benchmarks established by City Engineer to furnish and maintain reference lines and grades for construction. Use these lines and grades to establish location of tunnel, water line, and structures.

3. Establish and be fully responsible for accuracy of controls for construction of Project, including access shaft locations, structures, tunnel line, and grade. Utilize laser to insure line and grade are maintained during tunneling process.

4. Establish control points sufficiently removed from tunnel operation not to be affected by potential ground movement.

5. maintain daily surveying records of alignment and grade and submit three copies of records to City Engineer by end of day after work performed. Locate points at top, bottom and each side of springline.

6. check tunnel survey control against aboveground undisturbed reference at least once each week and once for each 250 feet of tunnel constructed, or more often as needed or directed by City Engineer.

B. Earth Movement: Contractor responsible for damages due to settlement from construction-induced activities or occurrences.

1. Take precautions to avoid damage or settlement to buildings, structures, roads, and utilities to work in proximity of tunnel. Minimum precautions to include use of construction methods and equipment to minimize loss of earth at tunnel face and settlement of soil around primary tunnel liner.

2. Refer to Paragraph 3.09, Monitoring for detecting earth movement.

3. In event movement of ground is detected, City Engineer may order work stopped and secured. Before proceeding, correct problems causing or resulting from movement.

4. Be aware that when settlement of ground surface should occur during construction of tunnel which will affect accuracy of temporary benchmarks established by City Engineer, detect and report movement. Locations of permanent City of Houston monumentation benchmarks are indicated on Drawings; Contractor may use these to verify temporary benchmark accuracy. Advise City Engineer of settlement affecting permanent monumentation benchmarks. Upon completion, submit field books pertaining to monitoring of permanent monumentation benchmarks to City Engineer.

C. Tunnel Line and Grade:

1. Survey crown, invert, and springline on each side of primary liner at 50-foot intervals, or minimum of once per shift, or more frequently when line and grade tolerances have been exceeded, to ensure alignment is within tolerances specified. Conduct survey immediately behind tunnel excavation to allow immediate correction of misalignment.

2. When excavation is off line and grade, make corrections to plan line and grade at rate of 3 inches per 100 feet.

3. Control excavation of tunnel and construction of primary liner to allow construction of carrier pipe within 6 inches on line and 4 inches on grade and to maintain circular shape of tunnel.

4. Alignment adjustments between primary tunnel liner and water main shall not encroach on minimum required clearance of 4 inches defined in Section 02517 - Water Main in Tunnels.

5. If unable to maintain specified tolerances, bear full responsibility and expense of correction (redesign, easement acquisition, etc.). when these tolerances are exceeded and redesign of structures is required, obtain services of qualified Professional Engineer registered in the State of Texas for redesign. Submit plans showing changes to City Engineer for review.

6. Backfill (grout) and reconstruct tunnel built outside tolerance or which is outside City's right-of-way to be within tolerance when so directed by City Engineer.

3.08 TUNNEL CONNECTIONS, TERMINATIONS, AND TEMPORARY BULKHEADS

A. Connect new tunnels to existing structures by removing existing bulkheads, when necessary, and sealing junction as shown on Drawings.

B. Seal terminations of tunnels, which are not connected to permanent structures, by temporary bulkhead.

C. Design temporary bulkheads where and when required and obtain City Engineer's acceptance of design prior to constructing it. Provide bulkheads capable of resisting lateral earth and hydrostatic pressures, waterproof, and capable of being removed without damaging water line or plastic liner.

3.09 MONITORING

A. Monitoring Instrumentation: This specification establishes minimum instrumentation requirements for tunneling. Additional instrumentation requirements for critical areas may be specified elsewhere in Specifications or on Drawings. Contractor may install more extensive system at Contractor's sole expense. Instrumentation specified shall be accessible at all times to City Engineer.

1. Submit for review, prior to construction, Monitoring Plan including instrument installation design, instrumentation points location and layout, manufacturer's catalog literature, installation report formats.

2. Install and maintain system of instrumentation to monitor tunneling operation and to detect movement in soil and adjacent structures. Instruments shall consist of no less than sufficient number of inclinometers and crack monitors at bridge and adjacent structures and sufficient piezometers. Use monuments sufficiently removed from construction to avoid errors in readings due to ground settlement.

3. Installation of instrumentation by Contractor shall not preclude City Engineer, through independent contractor or consultant, from installing instrumentation in, on, near, or adjacent to construction work. Provide access to work for independent installations.

4. Install soil instruments such as piezometers, inclinometers, extensometers, and crack monitors by qualified subcontractor specializing in geotechnical work.

5. Install extensometers to depth of 5 feet above crown of water line tunnel as shown on Drawings to measure vertical movements in soils during and subsequent to tunneling. Extensometer consists typically of three-prong anchor, 1/4-inch standard stainless steel inner pipe, and 1-inch standard Schedule 80 PVC outer pipe. Pipes are assembled in sections and fastened together with standard couplings to required anchor depths. Locate top of extensometer within flush-mounted hand hole cover capable of withstanding HS-20 truck loading. Geotechnical instrumentation installation subcontractor shall provide procedures for installation of extensometers as part of Monitoring Plan.

B. Building and Structures Assessment: Submit for review prior to construction, Building and Structures Assessment Plan. Provide preconstruction and post-construction assessment reports for buildings and structures located within distance equal to depth of tunnel but at least 50 feet in plan from proposed tunnel centerline and shafts. Include photographs or video of existing damage to structures in vicinity of water line alignment in assessment reports.

C. Settlement Surveying: This specification establishes minimum settlement survey requirements for structures and ground surface monitoring points.

1. Submit settlement surveying and monitoring plan for review prior to construction. Plan shall identify location of settlement monitoring points, reference benchmarks, survey schedules and procedures and reporting formats.

2. Locate survey points on all structures within distance equal to depth of tunnel but at least 50 feet in plan from tunnel centerline.

3. Record horizontal coordinates and elevations (with accuracy of 0.01 feet) for each survey point location. Reference survey points so that they may be accurately re-establishedwhen lost or destroyed.

4. Unless otherwise specified, record ground surface elevations on center line ahead of TBM and at 20 feet either side of center line at minimum of 100-foot intervals or at least three locations per tunnel drive. Starting 100 feet ahead of TBM and continuing until TBM is 100 feet beyond measurement point or until further movement is not detected, unless otherwise directed by City Engineer. Record cross-sectional points at 10-foot spacing for distance of 50 feet each side of center line or to ROW, whichever is less.

5. Locate survey points at crossings under installations as follows:

   a. Roads: Centerline and each shoulder.

   b. Railroad: Track subbase at centerline of each track.

   c. Utilities and Pipelines: Directly above and 10 feet before and after intersection.

6. For shaft settlement see Section 02400 - Tunnel Shafts.

D. Measure and maintain records of deformation of primary liner.

E. Reading Schedule and Reporting: Submit readings from various instruments and survey points weekly to City Engineer. Take daily Readings as required by City Engineer when construction is approaching or near critical structures (structures, bridge piers, pipelines, etc., partially or entirely located within distance equal to depth of tunnel but at least 50 feet in plan from tunnel centerline). Take initial readings of surface points before excavation or construction is started.

1. Immediately report to City Engineer movement, cracking, or settlement which is detected and take immediate remedial action. Contractor shall be fully responsible for damage to adjacent structures.

2. At end of construction after water line is installed, and dewatering is discontinued, make final survey of control points established for instrumentation and observation. Submit final readings to City Engineer. Make visual inspection of structures adjacent to water line and report to City Engineer condition of structures, damage incurred during construction, and corrective action taken.

3.10 DISPOSAL OF EXCESS MATERIAL

A. Remove spoil from job site and dispose in accordance with Section 01504 - Temporary Facilities and Controls.

END OF SECTION

Section 02441(Large Diameter)

MICROTUNNELING TUNNELS

PART 1 GENERAL

1.01 SECTION INCLUDES

A. Tunnel construction of casings by one-pass methods without man entry. Construction methods involve jacking casing following micro-tunnel boring machine (MTBM), with casing serving as tunnel liner after completion of construction.

1.02 MEASUREMENT AND PAYMENT

A. Unit Prices.

1. Payment of water line installed by tunneling is by linear foot along center line of completed water line as designated on Drawings.

2. Payment for installation of water line in tunnel constructed will be authorized by Project Manager in three parts. Pay estimates for partial payments will be made as measured above according to following schedule:

   a. 60 percent of installation will be authorized when excavation and primary liner installation is complete.

   b. 95 percent of installation will be authorized when water line installation and grouting is complete.

   c. 100 percent of installation will be authorized when section successfully hydrostatically tested.

3. Refer to section 01270 – Measurement and Payment for unit price procedures.

B. No separate payment will be made for other work performed under this Specification such as excavation, casing, grouting, or instrumentation and monitoring. Include cost of such other work in contract unit prices for items listed in bid form for Section 02517 -Water Main in Tunnels. Where such effort is necessary, cost for ground water control during course of tunnel work included in unit prices for water main in tunnel.

C. Stipulated Price (Lump Sum): If Contract is Stipulated Price Contract, payment for work in this Section is included in total Stipulated Price.

1.03 REFERENCE STANDARDS

A. American Railway Engineering and Maintenance-of-Way Association (AREMA) Manual for Railway Engineering.

B. American Association of State Highway and Transportation Officials (AASHTO).

C. American Society for Testing and Materials (ASTM).

a. ASTM A36 -Standard Specifications for Carbon Structural Steel.

b. ASTM A283 -Standard Specifications for Low and Intermediate Tensile Strength Carbon Steel Plates.

c. ASTM A328 -Standard Specifications for Steel Sheet Piling.

D. American Water Works Association (AWWA)

a. AWWA C200 -Steel Water Pipe 6-inches and Larger.

E. National Electrical Code - (NFPA 70).

F. Occupational Safety and Health Administration (OSHA).

1.04 DEFINITION

A. Jacked casing. Method for installing casing that serves as initial construction lining and tunnel support, installed for stability and safety during construction. Casing is shoved forward, or jacked, as tunnel is advanced.

B. Microtunneling. Method of installing casing by jacking casing behind microtunnel boring machine which is connected to and shoved forward by casing being installed, generally precluding man entry.

C. Microtunnel Boring Machine (MTBM). Mechanized excavating equipment that is remotely-controlled, steerable, guided and articulated, connected to and shoved forward by casing being installed, usually precluding man entry.

D. Tunneling Methodology. Written description, together with supporting documentation that defines plans and procedures for microtunneling or casing jacking operations.

E. Zone of Active Excavation. Area located within radial distance about surface point immediately above face of excavation equal to depth to bottom of excavation.

F. Carrier Pipe is referred to as water line or permanent (secondary) liner. Such water line/permanent liner defined and installed in accordance with Section 02517 -Water Main in Tunnels or Section 02511 -Water Mains.

G. Critical Structure. Building, structure, bridge, pier, or similar construction partially or entirely located within zone of active excavation.

1.05 SUBMITTALS

A. Conform to requirements of Section 01330 - Submittal Procedures.

B. Following submittals are required:

1. Tunneling Methodology. Brief description of proposed tunnel methodology. Description should be sufficient to convey following:

   a. Proposed method of tunnel construction

      i. including type of face support,

      ii. method of controlling line and grade of excavation,

      iii. proposed contingency plans for critical phases and areas of tunneling.

   b. Manufacturer and type of tunneling equipment proposed; type of lighting and ventilation systems, as required.

   c. Number and duration of shifts planned to be worked each day.

   d. Sequence of operations.

   e. Locations of access shafts and proposed work sites layout.

   f. Method of spoil transportation from face, surface storage and disposal location, including procedures for measuring excavation quantities versus forward progress during tunneling operation.

   g. Capacity of jacking equipment and type of cushioning.

   h. Identify critical utility crossings and special precautions proposed.

   i. Grouting techniques meeting requirements this Section and Section 02431 Tunneling Grout.

2. Drawings and Calculations: Submit for record purposes, drawings and calculations for tunnel support system. Provide adequate drawings and installation details for construction. Documents must be signed and sealed by Professional Engineer registered in State of Texas. Calculations shall include clear statement of criteria used for design as described in Paragraph 1.06, Design Criteria.

3. Quality Control: Submit for review brief description of quality control methods including:

   a. Method and frequency of survey control, controlling and checking line and grade, including field forms for establishing and che4cking line and grade.

   b. Example of tunnel daily log.

4. Geotechnical Investigation: When geotechnical investigations are conducted, submit results to Project Manager for record purposes.

5. Monitoring and Instrumentation Plans:

   a. Instrumentation Monitoring Plan: Submit, prior to construction, monitoring plan that includes schedule of instrumentation design, layout of instrumentation points, equipment installation details, manufacturer's catalog literature, and monitoring report forms.

   b. Surface Settlement Monitoring Plan. Submit settlement monitoring plan for review prior to construction. Identify on plan location of settlement monitoring points, reference benchmarks, survey frequency and procedures, and reporting formats.

6. Structures Assessment. Provide preconstruction and post-construction assessment reports for critical structures, namely those located within zone of active excavation from proposed tunnel centerline. Include photographs or video of existing damage to structures in vicinity of sewer alignment in assessment reports.

7. Readings of all monitoring shall be submitted to Project Manager.

8. Daily Reports: Maintain shift log as defined in Paragraph 3.04, jacked casing Tunneling Data, and make available to Project Manager on request.

1.06 DESIGN CRITERIA

A. Assume responsibility for selection of appropriate casing and wall thickness to carry thrust of any jacking forces or other construction loads in combination with overburden, earth and hydrostatic loads. Design of casing indicated on Drawings considers in-place loads only and does not take into account any construction loads. Determine criteria for longitudinal loading (jacking forces) on casing, based on selected method of construction.

B. Jacked casing shall be designed to withstand thrust from MTBM and pipe advance without damage or distortion. Configure propulsion jacks so that thrust is uniformly distributed and will not damage or distort casing pipe.

C. Take into account loads from handling and storing.

D. Use Cooper E-80 locomotive loading distributions in accordance with AREA specifications for culverts for criteria at railroad crossings. Account for additive loadings for multiple tracks in design.

E. Use HS-20 vehicle loading distributions for truck loading in accordance with AASHTO.

F. Provide minimum casing of diameter shown on Drawings. Substitution of casing with larger diameter to suit MTBM equipment requires Project Manager approval and must address minimum clearance requirements.

G. Perform sufficient exploration by geotechnical and environmental borings prior to beginning construction to define necessary parameters for selection of tunneling method and equipment to successfully complete each tunnel reach. Present results of Contractor's geotechnical and environmental investigations in related work plans.

PART 2 PRODUCTS

2.01 GENERAL

A. Assume responsibility for selecting appropriate casing to safely carry loads imposed during construction, including jacking forces. Casing joints shall be flush with outside casing face when casing sections are assembled.

B. Demonstrate that chosen method will prevent flow of water or soil into tunnel and provide stability of face under anticipated conditions.

C. Use casing of size so minimum clearance between bottom of carrier pipe and inside of casing is minimum 4 inches, and minimum clearance between top of pipe 3J1d inside of casing in accordance with following:

Carrier Pipe Net I.D.	Minimum Clearance to Top
≥ 48"	9"
42"	7"
36"	5"
≤30"	3"

Clearance applies to distance between carrier pipe and electrical conducting pipe support system.

2.02 STEEL CASING PIPE

A. Casing pipe: Provide new uncoated welded steel pipe, manufactured in accordance with AWWAC200.

B. Design stress in pipe wall shall be 50 percent of minimum yield point of steel or 18,000 psi, whichever is less when subjected to loading conditions.

C. Design deflection to be used in determining wall thickness shall not exceed 3 percent of nominal casing pipe size.

D. Bedding constant to be used in determining wall thickness shall be 0.10. Lag factors shall be 1.0 for all live loads.

E. Minimum thickness of steel casing shall be as shown on Drawing.

F. Design casing pipe to include stresses due to jacking forces.

G. Equip casing pipe with approximately 2-inchdiameter grout holes furnished with plugs. Place holes in pattern so that each succeeding hole from top dead center is 60 degrees right, then 60 degrees left, then top dead center. Locate holes in each line no more than 9 feet apart.

H. Conform casing pipe to welding and weld testing requirements specified in Section 02502 -Steel Pipe and Fittings.

PART 3 EXECUTION

3.01 CONSTRUCTION OPERATIONS CRITERIA

A. Use methods for microtunneling operations that will minimize ground settlement. Select MTBM method which will control flow of water and prevent loss of soil into tunnel and provide stability of face under anticipated conditions.

B. Conduct tunneling operations in accordance with applicable safety rules and regulations, OSHA standards and Contractor's safety plan. Use methods which include due regard for safety of adjacent structures, utilities, and public.

C. Maintain clean working conditions inside tunnel and remove muck, debris, material spills, and other material not required for tunneling.

D. Be aware that various existing soil borings, piezometers, or instrument wells may coincide with proposed tunnel alignment. These may or may not have been backfilled with grout and therefore caution should be used in tunneling through these existing borings. Take mitigating measures to counter effect these boreholes, piezometers, or instrument wells may have on tunneling operations.

E. Perform installation so as to avoid interference with operation of railroads, highways, or streets, except as approved by owner of facility.

3.02 GROUND WATER CONTROL

A. Provide ground water control measures in conformance with Section 01578 - Control of Ground Water and Surface Water, when necessary to perform Work.

B. Provide necessary ground water control measures to perform work and to provide safe working conditions. Prevent excessive inflow of water into excavation during construction of tunnel and installation of carrier pipe and grouting of annular space. Ground water control method shall provide means to prevent piping of fines into shafts or tunnel and other adverse effects due to ground water inflow.

C. Anticipate that portions of tunnel excavation may be below ground water table and in cohesionless soils, and in conditions which may require ground water control system

for tunneling operations. Remove water that may be encountered during course of work by pumping, well pointing, deep well pumping, or other means determined by Contractor as necessary to achieve stable conditions. Standing water not permitted in tunnel or shafts.

D. Maintain dewatering system in continuous operation until minimum of48 hours after carrier pipe has been installed and annular space is fully grouted.

3.03 EQUIPMENT

A. Full directional guidance of MTBM is prerequisite of this method of construction.

B. Assume responsibility for selection of tunneling equipment which, based on past experience, has proven to be satisfactory for excavation of soils to be encountered.

C. Employ tunneling equipment that will be capable of handling various anticipated ground conditions and is capable of minimizing loss of soil ahead of and around machine and shall provide satisfactory support of excavated face.

D. Microtunneling Equipment. Use spoil transportation system which:

1. Balances soil and ground water pressures by use of slurry or earth pressure balance system; system shall be capable of adjustments required to maintain face stability for particular soil condition and shall monitor and continuously balance soil and ground water pressure to prevent loss of slurry or uncontrolled soil and ground water inflow, or, in case of slurry spoil transportation system:

   a. Provides pressure at excavation face by use of slurry pumps, pressure control valves, and flow meter.

   b. Includes slurry bypass unit in system to allow direction of flow to be changed and isolated, as necessary.

   c. Includes separation process. Design it to provide adequate separation of spoil from slurry so that slurry with sediment content within limits required for successful tunneling can be returned to cutting face for reuse. Appropriately contain spoil at site prior to disposal.

   d. Uses type of separation process suited to size of tunnel being constructed, soil type being excavated, and work space available at each work area for operating plant.

   e. Allow composition of slurry to be monitored to maintain slurry weight and viscosity limits required.

2. Remote Control System. Provide remote control system with following features:

a. Allows for operation of system without need for personnel to enter tunnel. Has display available to operator, at remote operation console, showing position of shield in relation to design reference together with other information such as face pressure, roll, pitch, steering attitude, valve positions, thrust force, and cutter head torque; rate of advance and installed length.

b. Integrates system of excavation and removal of spoil and its simultaneous replacement by casing. As each casing section is jacked forward, control system shall synchronize all operational functions of system.

3. Active Direction Control. Provide active direction control system with following features:

a. Controls line and grade by guidance system that relates actual position of MTBM to design reference (by laser beam transmitted from jacking shaft along casing to target mounted in shield).

b. Provides active steering information which shall be monitored and transmitted to operating console.

c. Provides positioning and operation information to operator on control console.

4. Use generator which is suitably insulated for noise ("hospital" type).

E. Casing Jacking Equipment. Provide casing jacking system with following features:

1. Has main jacks mounted in jacking frame located in starting shaft.

2. Has jacking frame which successively pushes string of connected casing following tunneling excavation equipment toward receiving shaft.

3. Has sufficient jacking capacity to push tunneling excavation equipment and string of casing through ground.

4. Has capacity at least 20 percent greater than calculated maximum jacking load.

5. Develops uniform distribution of jacking forces on end of casing by use of spreader rings and packing, measured by operating gauges.

6. Provides and maintains casing lubrication system at all times to lower friction developed on surface of casing during jacking.

7. Jack Thrust Reactions. Use reactions for casing jacking that are adequate to support jacking pressure developed by main jacking system. Special care shall be taken when setting pipe guide rails in jacking shaft to ensure correctness of alignment, grade, and stability.

F. Air Quality. Provide equipment to maintain proper air quality of tunnel operations during construction in accordance with OSHA requirements.

1. Provide portable testing equipment for carbon monoxide gas, hydrogen sulfide gas, oxygen deficiency, and explosive gases. Monitoring for other constituents may be required while tunneling in potentially contaminated areas as defined in Contractor's safety plan.

2. Equip motors and controls with automatic shutoff methane monitoring system.

G. Enclose lighting fixtures in watertight enclosures with suitable guards. Provide separate circuits for lighting and other equipment.

H. Electrical systems shall conform to requirements of National Electrical Code - NFPA70.

3.04 JACKED CASING TUNNELING DATA

A. Maintain shift logs of construction events and observations. Provide Project Manager access to logs with regard to following information:

1. Location of boring machine face by station and progress of tunnel drive during shift.

2. Hours worked per shift on tunneling operations.

3. Completed field forms, such as steering control logs, for checking line and grade of tunneling operation, showing achieved tolerance relative to design alignment.

4. Maximum casing jacking pressures per drive.

5. Location, elevation and brief soil descriptions of soil strata.

6. Ground water control operations and piezometric levels.

7. Observation of any lost ground or other ground movement.

8. Any unusual conditions or events.

9. Reasons for operational shutdown in event drive is halted.

3.05 EXCAVATION AND JACKING OF CASING

A. Tunnel Excavation.

1. Keep tunnel excavation within easements and rights-of-way indicated on Drawings and to lines and grades designated on Drawings.

2. Perform tunneling operations in manner that will minimize movement of ground in front of and surrounding tunnel. Prevent damage to structures and utilities above and in vicinity of tunneling operations.

3. Closed-Face Excavation:

   a. Carefully control volume of spoil removed. Balance spoil removed with advance rate and excavation rate to avoid over-excavation or loss of ground.

   b. When cutting head is withdrawn or is open for any purpose, keep excavated face supported and stabilized.

4. Excavated diameter shall be minimum size to permit pipe installation with allowance for bentonite injection into annular space.

5. Whenever there is condition encountered which could endanger tunnel excavation or adjacent structures, operate without intermission including 24-hour working, weekends and holidays, until condition no longer exists.

6. Assume responsibility for damage due to settlement from any construction-induced activities.

B. Casing Jacking

1. Cushion casing joints as necessary to transmit jacking forces without damage to casing or joints.

2. Maintain envelope of bentonite slurry around exterior of casing during jacking and excavation operation to reduce exterior friction and possibility of casing seizing in place.

3. In event section of casing is damaged during jacking operation, or joint failure occurs, as evidenced by inspection, visible ground water inflow or other observations, submit for approval methods for repair or replacement of damaged casing.

C. Grouting. See additional Grouting requirements in Section 02431 - Tunnel Grout.

1. Provide in tunneling work plan description of grouting operations, including:

   a. Location, spacing and size of grout ports and vents.

   b. Grouting sequence for initial backfill of voids between casing and ground, and for second stage back grouting.

   c. Procedure to check for remaining voids.

   d. Sampling procedures and locations for quality control testing.

2. Use care in grouting operations to prevent damage to adjacent utilities or other properties. Ensure that pressure used in grouting is not great enough to distort or imperil work.

3. Grout from bottom up and plug each grout hole promptly after grout has been placed.

4. Upon completion of grouting operation, sound casing and immediately correct voids discovered by necessary means as approved by Project Manager. After all voids are successfully filled, pack grout holes, when necessary, with dry mortar mix and place threaded taps securely in holes.

3.06 CONTROL OF LINE AND GRADE

A. Construction Control.

1. Project Manager will establish baselines and benchmarks indicated on Drawings. Check baselines and benchmarks at beginning of Work and report any errors or discrepancies to Project Manager.

2. Use baselines and benchmarks established by Project Manager to establish and maintain construction control points, reference lines and grades for tunnel.

3. Establish construction control points sufficiently far from work so as not to be affected by ground movement caused by tunneling operations.

B. Bench Mark Movement. Ensure that if settlement of ground surface occurs during construction which affects accuracy of temporary benchmarks, detect and report such movement and reestablish temporary bench marks. Locations of permanent City of Houston monumentation benchmarks are indicated on Drawings. Advise Project Manager of any settlement affecting permanent monumentation benchmarks.

C. Line and Grade.

1. Check and record survey control for tunnel against above-ground undisturbed reference at least once for each 50 feet of tunnel constructed, or minimum of once per shift.

2. Record exact position of MTBM after each shove to ensure alignment is within specified tolerances. Make immediate correction to alignment before allowable tolerances are exceeded.

3. When excavation is off line or grade, make alignment corrections.

4. Control excavation of tunnel and construction of primary liner to allow construction of carrier pipe within 6 inches on line and 4 inches on grade and to maintain circular shape of tunnel.

5. Alignment adjustments between primary tunnel liner and water main shall not encroach on minimum required clearance of4 inches defined in Section 02517 - Water Main in Tunnels.

3.07 MONITORING

A. Instrumentation Monitoring. Instrumentation specified shall be accessible at all times to Project Manager. Readings shall be submitted promptly to Project Manager.

1. Submit for review, prior to construction, Monitoring Plan including instrument installation, instrumentation points location and layout, manufacturer's catalog literature, and installation report formats.

2. Instruments shall consist of no less than sufficient number of inclinometers and crack monitors at bridge and adjacent structures and sufficient piezometers.

3. Install and maintain instrumentation system to monitor and detect movement of ground surface and adjacent structures. Establish vertical control points at distance from construction areas that avoids disturbance due to ground settlement.

4. Installation of instrumentation shall not preclude Project Manager, through independent contractor or consultant, from installing instrumentation in, on, near, or adjacent to construction work. Access shall be provided to work for such independent installations.

5. Install soil instruments such as piezometers, inclinometers, extensometers, and crack monitors by qualified subcontractor specializing in geotechnical work. Instruments shall be installed in accordance with manufacturer's recommendations.

6. Install extensometers to depth of 5 feet above crown of water line tunnel as shown on Drawings to measure vertical movements in soils during and subsequent to tunneling. Extensometer consists typically of three-prong anchor, 1I4-inch standard stainless steel inner pipe, and I-inch standard Schedule 80 PVC outer pipe. Pipes are assembled in sections and fastened together with standard couplings to required anchor depths. Locate top of extensometer within flush-mounted hand hole cover capable of withstanding HS-20truck loading. Geotechnical instrumentation installation subcontractor shall provide procedures for installation of extensometers as part of Monitoring Plan.

B. Surface Settlement Monitoring

1. Establish monitoring points on all critical structures.

2. Record location of settlement monitoring points with respect to construction baselines and elevations. Record elevations to accuracy of 0.01 feet for each monitoring point location. Establish monitoring points at locations and by methods that protect them from damage by construction operations, tampering, or other external influences.

3. Ground surface elevations shall be recorded on centerline ahead of tunneling operations at minimum of 100-foot intervals or at least three locations per tunnel drive. Record ground surface elevations starting 100 feet ahead of MTBM and continuing until MTBM is 100 feet beyond measurement point or until further movement is not detected. Record cross-sectional points at 1O-foot spacing for distance of 20 feet and 50 feet each side of center line or to ROW, whichever is less. Locate survey points on all structures within distance equal to depth of tunnel but at least 50 feet in plan from tunnel centerline. Clearly mark settlement monitoring points by studs or paint for ease of locating.

4. Roads. Monitor ground settlement at centerline and each shoulder.

5. Railroads. Monitor ground settlement of track subbase at centerline of each track.

6. Utilities and Pipelines. Monitor ground settlement directly above and 10 feet before and after utility or pipeline intersection.

C. Reading Frequency and Reporting. Submit to Project Manager, records of readings from various instruments and survey points.

1. Read instrumentation monitoring results at frequency specified and, unless otherwise specified, shall be started prior to zone of active excavation reaching that point, and shall be continued until zone of active excavation has passed and until no further detectable movement occurs.

2. Surface settlement monitoring readings shall be taken:

   a. Prior to zone of active excavation reaching that point.

   b. When tunnel face reaches monitoring point (in plan).

   c. When zone of active excavation has passed and no further movement is detected.

3. Promptly submit monitoring readings to Project Manager.

4. Immediately report to Project Manager any movement, cracking, or settlement detected.

5. After water line is installed, and shaft dewatering is discontinued, make final survey of control points established for instrumentation and observation. Make visual inspection of structures adjacent to water line and report to

Project Manager condition of structures, damage incurred during construction, and corrective action taken.

6. Following substantial completion but prior to final completion, make final survey of all monitoring points.

3.08 DISPOSAL OF EXCESS MATERIAL

A. Remove spoil in accordance with Section 01576 - Waste Material Disposal.

END OF SECTION

Section 02716 (Large Diameter)

CEMENT STABILIZED SAND BASE

PART 1 GENERAL

1 SECTION INCLUDES

A. Cement stabilized sand base material.

2 MEASUREMENT AND PAYMENT

A. Unit Prices.

1. Payment for work under this section will be on a square yard basis for the thickness shown on Drawings. Limits of measurement will match actual pavement replaced, but no greater than the maximum pavement replacement limits shown on Drawings. Limits for measurement will be extended to include installed cement stabilized sand base course material that extends 1 foot beyond outside edge of pavement to be replaced, except where proposed pavement section shares a common longitudinal or transverse edge with existing pavement section. No pavement will be made for cement stabilized sand base in areas beyond these limits.

2. A price reduction for deficient thickness or strength will be applied in accordance with paragraph 3.08.

B. Stipulated Price (Lump Sum). If the Contract is a Stipulated Price Contract, payment for work in this Section is included in the total Stipulated Price.

3 REFERENCES

A. ASTM D558 - Standard Test Methods for Moisture-Density Relations of Soil-Cement Mixtures.

4 SUBMITTALS

A. Submittals shall conform to requirements of Section 01330 - Submittal Procedures.

B. Submit material qualification and mix design tests to include:

1. Three series of tests of sand or fine aggregate material from proposed source. Test procedures are defined in Paragraph 2.01.

2. Three moisture-density relationship tests prepared using the material qualified by the tests of Paragraph 1.04 B.1. Test blends of fine aggregate from crushed

concrete and bank run sand at ratio to be used for mix design testing.

3. Mix design report to meet design requirements of Paragraph 2.01. Include compressive strength tests after 48-hours and 7 days curing.

C. Submit source of cement-sand material.

PART 2 PRODUCTS

1 MATERIALS

A. Conform to requirements of Section 02321 - Cement Stabilized Sand.

2 MIXING MATERIALS

A. Conform to requirements of Section 02321 - Cement Stabilized Sand.

PART 3 EXECUTION

1 FIELD QUALITY CONTROL

A. Conform to requirements of Section 02321 -Cement Stabilized Sand for performance, testing and adjustment for deficient strength.

B. Material not placed, compacted and finished within 4 hours after mixing shall be rejected.

2 PREPARATION OF SUBGRADE

A. After excavation and/or fill is made to subgrade lines, remove soft or undesirable material and replace with material as specified under Section 02317 - Excavation and Backfill for Utilities. Grade and shape subgrade required to construct cement-stabilized sand base in conformance with lines, grades, thickness and typical cross section shown on Drawings.

B. Compact subgrade material as specified in Section 02317 - Excavation and Backfill for Utilities.

3 PLACING

A. Do not exceed percentage of moisture in soil subgrade at time of cement-stabilized sand base placement that permits uniform and intimate cement sand curing during placement operations. Do not exceed specified optimum moisture content for surrounding soil.

B. Place cement-stabilized base in uniform layers to produce depth indicated on Drawings. Place material in a single layer for depth of 6 inches or less. Place no single layer thicker

than 6 inches or less than 3 inches for depth greater than 6 inches.

C. Provide material on dry side of optimum moisture content during compaction but sufficient for hydration.

D. Make vertical construction joints between new material and material placed for more than 4 hours. Form plane of joint by a header removed immediately prior to placing new base, or cut base placed first to a vertical edge immediately prior to placing new base.

E. Do not place base when air temperature is below 40°F and falling. Place when temperature is above 35°F and rising. Take temperature in shade and away from artificial heat.

4 COMPACTION

A. Roll loose mixture with tamping rollers in addition to plate compactors or tandem rollers. Compact with mechanical hand tampers in places inaccessible to roller

B. Compact to 95 percent ASTM D558, unless otherwise specified.

C. Reconstruct sections when moisture content of uncompacted material exceeds amount required for proper hydration of cement.

5 FINISHING

A. Finish surface to grade by blading and seal with pneumatic or flat wheel rollers after final course is compacted. Other means providing a dense, uniform surface and avoiding compaction planes are permitted.

B. Correct any deviation from plan surface in excess of 1/4 inch in cross section and in length of 16 feet measured longitudinally prior to paving. Correct irregularities or weak spots by removing full depth of affected areas. Replace with suitable material as required. Reshape and compact.

C. Maintain moisture content of surface material at ±2 percent of optimum moisture. Proceed with surface compaction and finishing to produce a smooth, closely knit surface, free of cracks, ridges or loose material. Conform to crown, grade and line shown on Drawings, or as required to ensure proper drainage of pavement.

6 CURING

A. Protect finished surface against rapid drying by maintaining a moist condition. Sprinkle for not less than 3 days or until surface or pavement is placed.

7 TRAFFIC AND MAINTENANCE

A. Completed section of cement-stabilized sand base may be opened to local traffic and construction equipment after curing period, provided base material has hardened sufficiently to prevent marring or distorting surface by equipment or traffic.

B. Maintain cement-stabilized base in good condition until pavement replacement has been completed and accepted. Immediately repair defects, as often as needed to keep area intact. Repair cement-stabilized base to full depth by replacement. Do not repair by adding a thin surface layer to damaged part.

8 ADJUSTMENT FOR DEFICIENT BASE THICKNESS AND STRENGTH

A. Construct base to thickness and typical section shown on Drawings. Where base does not conform:

1. City may core drill base prior to final acceptance. Cores will be drilled full thickness of section. At least three core thicknesses will be averaged to determine base thickness.

2. A base within ½ inch of required thickness will be considered as satisfactory.

3. A base thickness between ½ inch less and 1½ inches less than required thickness will be considered deficient. Adjusted unit price will be used in payment.

   a. Adjusted unit price will bear same ratio to unit price as square of actual average thickness of base bears to square of thickness shown.

   b. Length of area of such deficient thickness will be determined by additional cores taken at 10-foot intervals in both directions until cores are obtained which are at least that required thickness less ½ inch.

   c. Width of deficiency will be entire width of base as placed in one operation within length as determined above.

4. No payment will be made for base found more than 1½ inches deficient. Length of unsatisfactory area will be determined by additional cores at 10-foot intervals in both directions until cores are obtained which are required thickness less ½ inch. Width will be entire base as placed in one operation within length determined as above. Remove and replace such base with base of specified thickness.

5. No additional payment over unit price will be made for thickness exceeding that required.

6. Contractor responsible for cost of cores taken to define limits of deficient base thickness.

B. Refer to Section 02321 - Cement Stabilized Sand, paragraph 3.03 for payment adjustment for deficient strength.

END OF SECTION

Item 360
Concrete Pavement

1. DESCRIPTION

Construct hydraulic cement concrete pavement with or without curbs on the concrete pavement.

2. MATERIALS

2.1. **Hydraulic Cement Concrete**. Provide hydraulic cement concrete in accordance with Item 421, "Hydraulic Cement Concrete." Use compressive strength testing unless otherwise shown on the plans. Provide Class P concrete designed to meet a minimum average compressive strength of 3,200 psi or a minimum average flexural strength of 450 psi at 7 days or a minimum average compressive strength of 4,000 psi or a minimum average flexural strength of 570 psi at 28 days. Test in accordance with Tex-448-A or Tex-418-A.

Obtain written approval if the concrete mix design exceeds 520 lb. of cementitious material.

Use coarse aggregates for continuously reinforced concrete pavements to produce concrete with a coefficient of thermal expansion not more than 5.5×10^{-6} in./in./°F. Provide satisfactory Tex-428-A test data from an approved testing laboratory if the coarse aggregate coefficient of thermal expansion listed on the Department's *Concrete Rated Source Quality Catalog* is not equal to or less than 5.5×10^{-6} in./in./°F.

Provide Class HES concrete for very early opening of small pavement areas or leave-outs to traffic when shown on the plans or allowed. Design Class HES to meet the requirements of Class P and a minimum average compressive strength of 3,200 psi or a minimum average flexural strength of 450 psi in 24 hr., unless other early strength and time requirements are shown on the plans or allowed.

Use Class A or P concrete for curbs that are placed separately from the pavement. Provide concrete that is workable and cohesive, possesses satisfactory finishing qualities, and conforms to the mix design and mix design slump.

2.2. **Reinforcing Steel**. Provide Grade 60 or above, deformed steel for bar reinforcement in accordance with Item 440, "Reinforcement for Concrete." Provide positioning and supporting devices (baskets and chairs) capable of securing and holding the reinforcing steel in proper position before and during paving. Provide corrosion protection when shown on the plans.

2.2.1. **Dowels**. Provide smooth, straight dowels of the size shown on the plans, free of burrs, and conforming to the requirements of Item 440, "Reinforcement for Concrete." Coat dowels with a thin film of grease, wax, silicone or other approved de-bonding material. Provide dowel caps on the lubricated end of each dowel bar used in an expansion joint. Provide dowel caps filled with a soft compressible material with enough range of movement to allow complete closure of the expansion joint.

2.2.2. **Tie Bars**. Provide straight deformed steel tie bars. Provide either multiple-piece tie bars or single-piece tie bars as shown on the plans. Furnish multiple piece tie bar assemblies from the list of approved multiple-piece tie bars that have been prequalified in accordance with DMS-4515 "Multiple Piece Tie Bars for Concrete Pavements," when used. Multiple-piece tie bars used on individual projects must be sampled in accordance with Tex-711-I, and tested in accordance with DMS-4515 "Multiple Piece Tie Bars for Concrete Pavements."

2.3. **Alternative Reinforcing Materials**. Provide reinforcement materials of the dimensions and with the physical properties specified when allowed or required by the plans. Provide manufacturer's certification of required material properties.

2.4. **Curing Materials**. Provide Type 2 membrane curing compound conforming to DMS-4650, "Hydraulic Cement Concrete Curing Materials and Evaporation Retardants." Provide SS-1 emulsified asphalt conforming to Item 300, "Asphalts, Oils, and Emulsions," for concrete pavement to be overlaid with asphalt concrete under this Contract unless otherwise shown on the plans or approved. Provide materials for other methods of curing conforming to the requirements of Item 422, "Concrete Superstructures." Provide insulating blankets for curing fast track concrete pavement with a minimum thermal resistance (R) rating of 0.5 hour-square foot F/BTU. Use insulating blankets that are free from tears and are in good condition.

2.5. **Epoxy**. Provide Type III, Class C epoxy in accordance with DMS-6100, "Epoxies and Adhesives," for installing all drilled-in reinforcing steel. Submit a work plan and request approval for the use of epoxy types other than Type III, Class C.

2.6. **Evaporation Retardant**. Provide evaporation retardant conforming to DMS-4650., "Hydraulic Cement Concrete Curing Materials and Evaporation Retardants."

2.7. **Joint Sealants and Fillers**. Provide Class 5 or Class 8 joint-sealant materials and fillers unless otherwise shown on the plans or approved and other sealant materials of the size, shape, and type shown on the plans in accordance with DMS-6310, "Joint Sealants and Fillers."

3. EQUIPMENT

Furnish and maintain all equipment in good working condition. Use measuring, mixing, and delivery equipment conforming to the requirements of Item 421, "Hydraulic Cement Concrete." Obtain approval for other equipment used.

3.1. **Placing, Consolidating, and Finishing Equipment**. Provide approved self-propelled paving equipment that uniformly distributes the concrete with minimal segregation and provides a smooth machine-finished consolidated concrete pavement conforming to plan line and grade. Provide an approved automatic grade control system on slip-forming equipment. Provide approved mechanically-operated finishing floats capable of producing a uniformly smooth pavement surface. Provide equipment capable of providing a fine, light water fog mist.

Provide mechanically-operated vibratory equipment capable of adequately consolidating the concrete. Provide immersion vibrators on the paving equipment at sufficiently close intervals to provide uniform vibration and consolidation of the concrete over the entire width and depth of the pavement and in accordance with the manufacturer's recommendations. Provide immersion vibrator units that operate at a frequency in air of at least 8,000 cycles per minute. Provide enough hand-operated immersion vibrators for timely and proper consolidation of the concrete along forms, at all joints and in areas not covered by other vibratory equipment. Surface vibrators may be used to supplement equipment-mounted immersion vibrators. Provide tachometers to verify the proper operation of all vibrators.

For small or irregular areas or when approved, the paving equipment described in this Section is not required.

3.2. **Forming Equipment**.

3.2.1. **Pavement Forms**. Provide metal side forms of sufficient cross-section, strength, and rigidity to support the paving equipment and resist the impact and vibration of the operation without visible springing or settlement. Use forms that are free from detrimental kinks, bends, or warps that could affect ride quality or alignment. Provide flexible or curved metal or wood forms for curves of 100-ft. radius or less.

3.2.2. **Curb Forms**. Provide curb forms for separately placed curbs that are not slipformed that conform to the requirements of Item 529, "Concrete Curb, Gutter, and Combined Curb and Gutter."

3.3. **Reinforcing Steel Inserting Equipment**. Provide inserting equipment that accurately inserts and positions reinforcing steel in the plastic concrete parallel to the profile grade and horizontal alignment in accordance to plan details when approved.

3.4. **Texturing Equipment**.

3.4.1. **Carpet Drag**. Provide a carpet drag mounted on a work bridge or a manual moveable support system. Provide a single piece of carpet of sufficient transverse length to span the full width of the pavement being placed and adjustable so that a sufficient longitudinal length of carpet is in contact with the concrete being placed to produce the desired texture. Obtain approval to vary the length and width of the carpet to accommodate specific applications.

3.4.2. **Tining Equipment**. Provide a self-propelled metal tine device equipped with steel tines with cross-section approximately 1/32 in. thick × 1/12 in. wide. Provide tines for transverse tining equipment spaced at approximately 1 in., center-to-center, or provide tines for longitudinal tining equipment spaced at approximately 3/4 in., center-to-center. Manual methods that produce an equivalent texture may be used when it is impractical to use self-propelled equipment, such as for small areas, narrow width sections, and in emergencies due to equipment breakdown.

3.5. **Curing Equipment**. Provide a self-propelled machine for applying membrane curing compound using mechanically-pressurized spraying equipment with atomizing nozzles. Provide equipment and controls that maintain the required uniform rate of application over the entire paving area. Provide curing equipment that is independent of all other equipment when required to meet the requirements of Section 360.4.9., "Curing." Hand-operated pressurized spraying equipment with atomizing nozzles may only be used on small or irregular areas, narrow width sections, or in emergencies due to equipment breakdown.

3.6. **Sawing Equipment**. Provide power-driven concrete saws to saw the joints shown on the plans. Provide standby power-driven concrete saws during concrete sawing operations. Provide adequate illumination for nighttime sawing.

3.7. **Grinding Equipment**. Provide self-propelled powered grinding equipment that is specifically designed to smooth and texture concrete pavement using circular diamond blades when required. Provide equipment with automatic grade control capable of grinding at least a 3-ft. width longitudinally in each pass without damaging the concrete.

3.8. **Testing Equipment**. Provide testing equipment regardless of job-control testing responsibilities in accordance with Item 421, "Hydraulic Cement Concrete," unless otherwise shown on the plans or specified.

3.9. **Coring Equipment**. Provide coring equipment capable of extracting cores in accordance with the requirements of Tex-424-A when required.

3.10. **Miscellaneous Equipment**. Furnish both 10-ft. and 15-ft. steel or magnesium long-handled, standard straightedges. Furnish enough work bridges, long enough to span the pavement, for finishing and inspection operations.

4. CONSTRUCTION

Obtain approval for adjustments to plan grade-line to maintain thickness over minor subgrade or base high spots while maintaining clearances and drainage. Maintain subgrade or base in a smooth, clean, compacted condition in conformity with the required section and established grade until the pavement concrete is placed. Keep subgrade or base damp with water before placing pavement concrete.

Adequately light the active work areas for all nighttime operations. Provide and maintain tools and materials to perform testing.

4.1. **Paving and Quality Control Plan**. Submit a paving and quality control plan for approval before beginning pavement construction operations. Include details of all operations in the concrete paving process, including methods to construct transverse joints, methods to consolidate concrete at joints, longitudinal construction joint layout, sequencing, curing, lighting, early opening, leave-outs, sawing, inspection, testing, construction methods, other details and description of all equipment. List certified personnel performing the testing. Submit revisions to the paving and quality control plan for approval.

4.2. **Job-Control Testing**. Perform all fresh and hardened concrete job-control testing at the specified frequency unless otherwise shown on the plans. Provide job-control testing personnel meeting the requirements of Item 421, "Hydraulic Cement Concrete." Provide and maintain testing equipment, including strength testing equipment at a location acceptable to the Engineer. Use of a commercial laboratory is acceptable. Maintain all testing equipment calibrated in accordance with pertinent test methods. Make strength-testing equipment available to the Engineer for verification testing.

Provide the Engineer the opportunity to witness all tests. The Engineer may require a retest if not given the opportunity to witness. Furnish a copy of all test results to the Engineer daily. Check the first few concrete loads for slump and temperature to verify concrete conformance and consistency on start-up production days. Sample and prepare strength-test specimens (2 specimens per test) on the first day of production and for each 3,000 sq. yd. or fraction thereof of concrete pavement thereafter. Prepare at least 1 set of strength-test specimens for each production day. Perform slump and temperature tests each time strength specimens are made. Monitor concrete temperature to ensure that concrete is consistently within the temperature requirements. The Engineer will direct random job-control sampling and testing. Immediately investigate and take corrective action as approved if any Contractor test result, including tests performed for verification purposes, does not meet specification requirements.

The Engineer will perform job-control testing when the testing by the Contractor is waived by the plans; however, this does not waive the Contractor's responsibility for providing materials and work in accordance with this Item.

4.2.1. **Job-Control Strength**. Use 7-day job-control concrete strength testing in accordance with Tex-448-A or Tex-418-A unless otherwise shown on the plans or permitted.

Use a compressive strength of 3,200 psi or a lower job-control strength value proven to meet a 28-day compressive strength of 4,000 psi as correlated in accordance with Tex-427-A for 7-day job-control by compressive strength. Use a flexural strength of 450 psi or a lower job-control strength value proven to meet a 28-day flexural strength of 570 psi as correlated in accordance with Tex-427-A for 7-day job-control by flexural strength.

Job control of concrete strength may be correlated to an age other than 7 days in accordance with Tex-427-A when approved. Job-control strength of Class HES concrete is based on the required strength and time.

Investigate the strength test procedures, the quality of materials, the concrete production operations, and other possible problem areas to determine the cause when a job-control concrete strength test value is more than 10% below the required job-control strength or when 3 consecutive job-control strength values fall below the required job-control strength. Take necessary action to correct the problem, including redesign of the concrete mix if needed. The Engineer may suspend concrete paving if the Contractor is unable to identify, document, and correct the cause of low-strength test values in a timely manner. The Engineer will evaluate the structural adequacy of the pavements if any job-control strength is more than 15% below the required job-control strength. Remove and replace pavements found to be structurally inadequate at no additional cost when directed.

4.2.2. **Split-Sample Verification Testing**. Perform split-sample verification testing with the Engineer on random samples taken and split by the Engineer at a rate of at least 1 for every 10 job-control samples. The Engineer will evaluate the results of split-sample verification testing. Immediately investigate and take corrective action as approved when results of split-sample verification testing differ more than the allowable differences shown in Table 1, or the average of 10 job-control strength results and the Engineer's split-sample strength result differ by more than 10%.

Table 1
Verification Testing Limits

Test Method	Allowable Differences
Temperature, Tex-422-A	2°F
Slump, Tex-415-A	1 in.
Flexural strength, Tex-448-A	19%
Compressive strength, Tex-418-A	10%

4.3. **Reinforcing Steel and Joint Assemblies**. Accurately place and secure in position all reinforcing steel as shown on the plans. Place dowels at mid-depth of the pavement slab, parallel to the surface. Place dowels for transverse contraction joints parallel to the pavement edge. Tolerances for location and alignment of dowels will be shown on the plans. Stagger the lap locations so that no more than 1/3 of the longitudinal steel is spliced in any given 12-ft. width and 2-ft. length of the pavement. Use multiple-piece tie bars, drill and epoxy grout tie bars, or, if approved, mechanically-inserted single-piece tie bars at longitudinal construction joints. Verify that tie bars that are drilled and epoxied or mechanically inserted into concrete at longitudinal construction joints develop a pullout resistance equal to a minimum of 3/4 of the yield strength of the steel after 7 days. Test 15 bars using ASTM E488, except that alternate approved equipment may be used. All 15 tested bars must meet the required pullout strength. Perform corrective measures to provide equivalent pullout resistance if any of the test results do not meet the required minimum pullout strength. Repair damage from testing. Acceptable corrective measures include but are not limited to installation of additional or longer tie bars.

4.3.1. **Manual Placement**. Secure reinforcing bars at alternate intersections with wire ties or locking support chairs. Tie all splices with wire.

4.3.2. **Mechanical Placement**. Complete the work using manual placement methods described above if mechanical placement of reinforcement results in steel misalignment or improper location, poor concrete consolidation, or other inadequacies.

4.4. **Joints**. Install joints as shown on the plans. Joint sealants are not required on concrete pavement that is to be overlaid with asphaltic materials. Clean and seal joints in accordance with Item 438, “Cleaning and Sealing Joints.” Repair excessive spalling of the joint saw groove using an approved method before installing the sealant. Seal all joints before opening the pavement to all traffic. Install a rigid transverse bulkhead, for the reinforcing steel, and shaped accurately to the cross-section of the pavement when placing of concrete is stopped.

4.4.1. **Placing Reinforcement at Joints**. Complete and place the assembly of parts at pavement joints at the required location and elevation, with all parts rigidly secured in the required position, when shown on the plans.

4.4.2. **Transverse Construction Joints**.

4.4.2.1. **Continuously Reinforced Concrete Pavement (CRCP)**. Install additional longitudinal reinforcement through the bulkhead when shown on the plans. Protect the reinforcing steel immediately beyond the construction joint from damage, vibration, and impact.

4.4.2.2. **Concrete Pavement Contraction Design (CPCD)**. Install and rigidly secure a complete joint assembly and bulkhead in the planned transverse contraction joint location when the placing of concrete is intentionally stopped. Install a transverse construction joint either at a planned transverse contraction joint location or mid-slab between planned transverse contraction joints when the placing of concrete is unintentionally stopped. Install tie bars of the size and spacing used in the longitudinal joints for mid-slab construction joints.

4.4.2.3. **Curb Joints**. Provide joints in the curb of the same type and location as the adjacent pavement. Use expansion joint material of the same thickness, type, and quality required for the pavement and of the section shown for the curb. Extend expansion joints through the curb. Construct curb joints at all transverse pavement joints. Place reinforcing steel into the plastic concrete pavement for non-monolithic curbs as shown on the plans unless otherwise approved. Form or saw the weakened plane joint across the full width

of concrete pavement and through the monolithic curbs. Construct curb joints in accordance with Item 529, "Concrete Curb, Gutter, and Combined Curb and Gutter."

4.5. **Placing and Removing Forms**. Use clean and oiled forms. Secure forms on a base or firm subgrade that is accurately graded and that provides stable support without deflection and movement by form riding equipment. Pin every form at least at the middle and near each end. Tightly join and key form sections together to prevent relative displacement.

Set side forms far enough in advance of concrete placement to permit inspection. Check conformity of the grade, alignment, and stability of forms immediately before placing concrete, and make all necessary corrections. Use a straightedge or other approved method to test the top of forms to ensure that the ride quality requirements for the completed pavement will be met. Stop paving operations if forms settle or deflect more than 1/8 in. under finishing operations. Reset forms to line and grade, and refinish the concrete surface to correct grade.

Avoid damage to the edge of the pavement when removing forms. Repair damage resulting from form removal and honeycombed areas with a mortar mix within 24 hr. after form removal unless otherwise approved. Clean joint face and repair honeycombed or damaged areas within 24 hr. after a bulkhead for a transverse construction joint has been removed unless otherwise approved. Promptly apply membrane curing compound to the edge of the concrete pavement when forms are removed before 72 hr. after concrete placement.

Forms that are not the same depth as the pavement, but are within 2 in. of that depth are permitted if the subbase is trenched or the full width and length of the form base is supported with a firm material to produce the required pavement thickness. Promptly repair the form trench after use. Use flexible or curved wood or metal forms for curves of 100-ft. radius or less.

4.6. **Concrete Delivery**. Clean delivery equipment as necessary to prevent accumulation of old concrete before loading fresh concrete. Use agitated delivery equipment for concrete designed to have a slump of more than 5 in. Segregated concrete is subject to rejection.

Begin the discharge of concrete delivered in agitated delivery equipment conforming to the requirements of Item 421, "Hydraulic Cement Concrete." Place non-agitated concrete within 45 min. after batching. Reduce times as directed when hot weather or other conditions cause quick setting of the concrete.

4.7. **Concrete Placement**. Do not allow the pavement edge to deviate from the established paving line by more than 1/2 in. at any point. Place the concrete as near as possible to its final location, and minimize segregation and rehandling. Distribute concrete using shovels where hand spreading is necessary. Do not use rakes or vibrators to distribute concrete.

4.7.1. **Consolidation**. Consolidate all concrete by approved mechanical vibrators operated on the front of the paving equipment. Use immersion-type vibrators that simultaneously consolidate the full width of the placement when machine finishing. Keep vibrators from dislodging reinforcement. Use hand-operated vibrators to consolidate concrete along forms, at all joints and in areas not accessible to the machine-mounted vibrators. Do not operate machine-mounted vibrators while the paving equipment is stationary. Vibrator operations are subject to review.

4.7.2. **Curbs**. Conform to the requirements of Item 529, "Concrete Curb, Gutter, and Combined Curb and Gutter" where curbs are placed separately.

4.7.3. **Temperature Restrictions**. Place concrete that is between 40°F and 95°F when measured in accordance with Tex-422-A at the time of discharge, except that concrete may be used if it was already in transit when the temperature was found to exceed the allowable maximum. Take immediate corrective action or cease concrete production when the concrete temperature exceeds 95°F.

Do not place concrete when the ambient temperature in the shade is below 40°F and falling unless approved. Concrete may be placed when the ambient temperature in the shade is above 35°F and rising or

above 40°F. Protect the pavement with an approved insulating material capable of protecting the concrete for the specified curing period when temperatures warrant protection against freezing. Submit for approval proposed measures to protect the concrete from anticipated freezing weather for the first 72 hr. after placement. Repair or replace all concrete damaged by freezing.

4.8. **Spreading and Finishing**. Finish all concrete pavement with approved self-propelled equipment. Use power-driven spreaders, power-driven vibrators, power-driven strike-off, screed, or approved alternate equipment. Use the transverse finishing equipment to compact and strike-off the concrete to the required section and grade without surface voids. Use float equipment for final finishing. Use concrete with a consistency that allows completion of all finishing operations without addition of water to the surface. Use the minimal amount of water fog mist necessary to maintain a moist surface. Reduce fogging if float or straightedge operations result in excess slurry.

4.8.1. **Finished Surface**. Perform sufficient checks with long-handled 10-ft. and 15-ft. straightedges on the plastic concrete to ensure the final surface is within the tolerances specified in Surface Test A in Item 585, "Ride Quality for Pavement Surfaces." Check with the straightedge parallel to the centerline.

4.8.2. **Maintenance of Surface Moisture**. Prevent surface drying of the pavement before application of the curing system by means that may include water fogging, the use of wind screens, and the use of evaporation retardants. Apply evaporation retardant at the manufacturer's recommended rate. Reapply the evaporation retardant as needed to maintain the concrete surface in a moist condition until curing system is applied. Do not use evaporation retardant as a finishing aid. Failure to take acceptable precautions to prevent surface drying of the pavement will be cause for shutdown of pavement operations.

4.8.3. **Surface Texturing**. Complete final texturing before the concrete has attained its initial set. Drag the carpet longitudinally along the pavement surface with the carpet contact surface area adjusted to provide a satisfactory coarsely textured surface. Prevent the carpet from getting plugged with grout. Do not perform carpet dragging operations while there is excessive bleed water.

A metal-tine texture finish is required unless otherwise shown on the plans. Provide transverse tining unless otherwise shown on the plans. Immediately following the carpet drag, apply a single coat of evaporation retardant, if needed, at the rate recommended by the manufacturer. Provide the metal-tine finish immediately after the concrete surface has set enough for consistent tining. Operate the metal-tine device to obtain grooves approximately 3/16 in. deep, with a minimum depth of 1/8 in., and approximately 1/12 in. wide. Do not overlap a previously tined area. Use manual methods to achieve similar results on ramps, small or irregular areas, and narrow width sections of pavements. Repair damage to the edge of the slab and joints immediately after texturing. Do not tine pavement that will be overlaid or that is scheduled for blanket diamond grinding or shot blasting.

Target a carpet drag texture of 0.04 in., as measured by Tex-436-A, when carpet drag is the only surface texture required on the plans. Ensure adequate and consistent macro-texture is achieved by applying enough weight to the carpet and by keeping the carpet from getting plugged with grout. Correct any location with a texture less than 0.03 in. by diamond grinding or shot blasting. The Engineer will determine the test locations at points located transversely to the direction of traffic in the outside wheel path.

4.8.4. **Small, Irregular Area, or Narrow Width Placements**. Use hand equipment and procedures that produce a consolidated and finished pavement section to the line and grade where machine placements and finishing of concrete pavement are not practical.

4.8.5. **Emergency Procedures**. Use hand-operated equipment for applying texture, evaporation retardant, and cure in the event of equipment breakdown.

4.9. **Curing**. Keep the concrete pavement surface from drying as described in Section 360.4.8.2., "Maintenance of Surface Moisture," until the curing material has been applied. Maintain and promptly repair damage to curing materials on exposed surfaces of concrete pavement continuously for at least 3 curing days. A curing day is defined as a 24-hr. period when either the temperature taken in the shade away from artificial heat is above 50°F for at least 19 hr. or the surface temperature of the concrete is maintained above 40°F for 24 hr.

Curing begins when the concrete curing system has been applied. Stop concrete paving if curing compound is not being applied promptly and maintained adequately. Other methods of curing in accordance with Item 422, "Concrete Superstructures," may be used when specified or approved.

4.9.1. **Membrane Curing**. Spray the concrete surface uniformly with 2 coats of membrane curing compound at an individual application rate of no more than 180 sq. ft. per gallon. Apply the curing compound before allowing the concrete surface to dry.

Manage finishing and texturing operations to ensure placement of curing compound on a moist concrete surface, relatively free of bleed water, to prevent any plastic shrinkage cracking. Time the application of curing compound to prevent plastic shrinkage cracking.

Maintain curing compounds in a uniformly agitated condition, free of settlement before and during application. Do not thin or dilute the curing compound.

Apply additional compound at the same rate of coverage to correct damage where the coating shows discontinuities or other defects or if rain falls on the newly coated surface before the film has dried enough to resist damage. Ensure that the curing compound coats the sides of the tining grooves.

4.9.2. **Asphalt Curing**. Apply a uniform coating of asphalt curing at a rate of 90 to 180 sq. ft. per gallon when an asphaltic concrete overlay is required. Apply curing immediately after texturing and once the free moisture (sheen) has disappeared. Obtain approval to add water to the emulsion to improve spray distribution. Maintain the asphalt application rate when using diluted emulsions. Maintain the emulsion in a mixed condition during application.

4.9.3. **Curing Class HES Concrete**. Provide membrane curing in accordance with Section 360.4.9.1., "Membrane Curing," for all Class HES concrete pavement. Promptly follow by wet mat curing in accordance with Section 422.4.8., "Final Curing," until opening strength is achieved but not less than 24 hr.

4.9.4. **Curing Fast-Track Concrete**. Provide wet mat curing unless otherwise shown on the plans or as directed. Cure in accordance with Section 422.4.8., "Final Curing." Apply a Type 1-D or Type 2 membrane cure instead of wet mat curing if the air temperature is below 65°F and insulating blankets are used.

4.10. **Sawing Joints**. Saw joints to the depth shown on the plans as soon as sawing can be accomplished without damage to the pavement regardless of time of day or weather conditions. Some minor raveling of the saw-cut is acceptable. Use a chalk line, string line, sawing template, or other approved method to provide a true joint alignment. Provide enough saws to match the paving production rate to ensure sawing completion at the earliest possible time to avoid uncontrolled cracking. Reduce paving production if necessary to ensure timely sawing of joints. Promptly restore membrane cure damaged within the first 72 hr. of curing.

4.11. **Protection of Pavement and Opening to Traffic**. Testing for early opening is the responsibility of the Contractor regardless of job-control testing responsibilities unless otherwise shown on the plans or as directed. Testing result interpretation for opening to traffic is subject to approval.

4.11.1. **Protection of Pavement**. Erect and maintain barricades and other standard and approved devices that will exclude all vehicles and equipment from the newly placed pavement for the periods specified. Protect the pavement from damage due to crossings using approved methods before opening to traffic. Where a detour is not readily available or economically feasible, an occasional crossing of the roadway with overweight equipment may be permitted for relocating equipment only but not for hauling material. When an occasional crossing of overweight equipment is permitted, temporary matting or other approved methods may be required.

Maintain an adequate supply of sheeting or other material to cover and protect fresh concrete surface from weather damage. Apply as needed to protect the pavement surface from weather.

4.11.2. **Opening Pavement to All Traffic**. Pavement that is 7 days old may be opened to all traffic. Clean pavement, place stable material against the pavement edges, seal joints, and perform all other traffic safety related work before opening to traffic.

4.11.3. **Opening Pavement to Construction Equipment**. Unless otherwise shown on the plans, concrete pavement may be opened early to concrete paving equipment and related delivery equipment after the concrete is at least 48 hr. old and opening strength has been demonstrated in accordance with Section 360.4.11.4., "Early Opening to All Traffic," before curing is complete. Keep delivery equipment at least 2 ft. from the edge of the concrete pavement. Keep tracks of the paving equipment at least 1 ft. from the pavement edge. Protect textured surfaces from the paving equipment. Restore damaged membrane curing as soon as possible. Repair pavement damaged by paving or delivery equipment before opening to all traffic.

4.11.4. **Early Opening to All Traffic**. Concrete pavement may be opened after curing is complete and the concrete has attained a flexural strength of 450 psi or a compressive strength of 3,200 psi, except that pavement using Class HES concrete may be opened after 24 hr. if the specified strength is achieved.

4.11.4.1. **Strength Testing**. Test concrete specimens cured under the same conditions as the portion of the pavement involved.

4.11.4.2. **Maturity Method**. Use the maturity method, Tex-426-A, to estimate concrete strength for early opening pavement to traffic unless otherwise shown on the plans. Install at least 2 maturity sensors for each day's placement in areas where the maturity method will be used for early opening. Maturity sensors, when used, will be installed near the day's final placement for areas being evaluated for early opening. Use test specimens to verify the strength–maturity relationship in accordance with Tex-426-A, starting with the first day's placement corresponding to the early opening pavement section.

Verify the strength–maturity relationship at least every 10 days of production after the first day. Establish a new strength–maturity relationship when the strength specimens deviate more than 10% from the maturity-estimated strengths. Suspend use of the maturity method for opening pavements to traffic when the strength–maturity relationship deviates by more than 10% until a new strength–maturity relationship is established.

The Engineer will determine the frequency of verification when the maturity method is used intermittently or for only specific areas.

4.11.5. **Fast Track Concrete Pavement**. Open the pavement after the concrete has been cured for at least 8 hr. and attained a minimum compressive strength of 1,800 psi or a minimum flexural strength of 255 psi when tested in accordance with Section 360.4.11.4.1., "Strength Testing," or Section 360.4.11.4.2., "Maturity Method," unless otherwise directed. Cover the pavement with insulating blankets when the air temperature is below 65°F until the pavement is opened to traffic.

4.11.6. **Emergency Opening to Traffic**. Open the pavement to traffic under emergency conditions, when the pavement is at least 72 hr. old when directed in writing. Remove all obstructing materials, place stable material against the pavement edges, and perform other work involved in providing for the safety of traffic as required for emergency opening.

4.12. **Pavement Thickness**. The Engineer will check the thickness in accordance with Tex-423-A unless other methods are shown on the plans. The Engineer will perform 1 thickness test consisting of 1 reading at approximately the center of each lane every 500 ft. or fraction thereof. Core where directed, in accordance with Tex-424-A, to verify deficiencies of more than 0.2 in. from plan thickness and to determine the limits of deficiencies of more than 0.75 in. from plan thickness. Fill core holes using an approved concrete mixture and method.

4.12.1. **Thickness Deficiencies Greater than 0.2 in.** Take one 4-in. diameter core at that location to verify the measurement when any depth test measured in accordance with Tex-423-A is deficient by more than 0.2 in. from the plan thickness.

Take 2 additional cores from the unit (as defined in Section 360.4.12.3., "Pavement Units for Payment Adjustment") at intervals of at least 150 ft. and at selected locations if the core is deficient by more than 0.2 in., but not by more than 0.75 in. from the plan thickness, and determine the thickness of the unit for payment purposes by averaging the length of the 3 cores. In calculations of the average thickness of this unit of pavement, measurements in excess of the specified thickness by more than 0.2 in. will be considered as the specified thickness plus 0.2 in.

4.12.2. **Thickness Deficiencies Greater than 0.75 in.** Take additional cores at 10-ft. intervals in each direction parallel to the centerline to determine the boundary of the deficient area if a core is deficient by more than 0.75 in. The Engineer will evaluate any area of pavement found deficient in thickness by more than 0.75 in., but not more than 1 in. Remove and replace the deficient areas without additional compensation or retain deficient areas without compensation, as directed. Remove and replace any area of pavement found deficient in thickness by more than 1 in. without additional compensation.

4.12.3. **Pavement Units for Payment Adjustment**. Limits for applying a payment adjustment for deficient pavement thickness from 0.20 in. to not more than 0.75 in. are 500 ft. of pavement in each lane. Lane width will be as shown on typical sections and pavement design standards.

For greater than 0.75 in. deficient thickness, the limits for applying zero payment or requiring removal will be defined by coring or equivalent nondestructive means as determined by the Engineer. The remaining portion of the unit determined to be less than 0.75 in. deficient will be subject to the payment adjustment based on the average core thickness at each end of the 10-ft. interval investigation as determined by the Engineer.

Shoulders will be measured for thickness unless otherwise shown on the plans. Shoulders 6 ft. wide or wider will be considered as lanes. Shoulders less than 6 ft. wide will be considered part of the adjacent lane.

Limits for applying payment adjustment for deficient pavement thickness for ramps, widenings, acceleration and deceleration lanes, and other miscellaneous areas are 500 ft. in length. Areas less than 500 ft. in length will be individually evaluated for payment adjustment based on the plan area.

4.13. **Ride Quality**. Measure ride quality in accordance with Item 585, "Ride Quality for Pavement Surfaces," unless otherwise shown on the plans.

5. MEASUREMENT

This Item will be measured as follows:

5.1. **Concrete Pavement**. Concrete pavement will be measured by the square yard of surface area in place. The surface area includes the portion of the pavement slab extending beneath the curb.

5.2. **Curb**. Curb on concrete pavement will be measured by the foot in place.

6. PAYMENT

These prices are full compensation for materials, equipment, labor, tools, and incidentals.

6.1. **Concrete Pavement**. The work performed and materials furnished in accordance with this Item and measured as provided under "Measurement" will be paid for at the adjusted unit price bid for "Concrete Pavement" of the type and depth specified as adjusted in accordance with Section 360.6.2., "Deficient Thickness Adjustment."

6.2. **Deficient Thickness Adjustment**. Where the average thickness of pavement is deficient in thickness by more than 0.2 in. but not more than 0.75 in., payment will be made using the adjustment factor as specified in Table 2 applied to the bid price for the deficient area for each unit as defined under Section 360.4.12.3., "Pavement Units for Payment Adjustment."

Table 2
Deficient Thickness Price Adjustment Factor

Deficiency in Thickness Determined by Cores (in.)	Proportional Part of Contract Price Allowed (Adjustment Factor)
Not deficient	1.00
Over 0.00 through 0.20	1.00
Over 0.20 through 0.30	0.80
Over 0.30 through 0.40	0.72
Over 0.40 through 0.50	0.68
Over 0.50 through 0.75	0.57

6.3. **Curb**. Work performed and furnished in accordance with this Item and measured as provided under "Measurement" will be paid for at the unit price bid for "Curb" of the type specified.

Item 361
Repair of Concrete Pavement

1. DESCRIPTION

Repair concrete pavement to half-depth or full-depth in accordance with the details shown on the plans and the requirements of this Item.

2. MATERIALS

Provide materials that meet the pertinent requirements of the following:

- Item 360, "Concrete Pavement"
- Item 421, "Hydraulic Cement Concrete"
- Item 440, "Reinforcement for Concrete"
- DMS-6100, "Epoxies and Adhesives"
- DMS-4655, "Concrete Repair Materials"

2.1. **Half-Depth Repair**. Obtain approval for the repair material mix design. The selection of repair material should be based on the time for opening to traffic and temperature range during the repair.

Provide Class HES concrete designed to attain a minimum average flexural strength of 255 psi or a minimum average compressive strength of 1,800 psi within the timeframe designated for opening to traffic if it is less than 72 hr. after concrete placement. Otherwise, provide Class S conforming to Item 421, "Hydraulic Cement Concrete" or Class P concrete conforming to Item 360, "Concrete Pavement."

Provide material meeting the requirements of DMS-4655, "Concrete Repair Materials," Type A-1 or A-2 when concrete in accordance with Item 421, "Hydraulic Cement Concrete," does not meet the strength requirement within the designated timeframe.

2.2. **Full-Depth Repair**. Obtain approval for the repair material mix design. The selection of repair material should be based on the time for opening to traffic and temperature range during the repair.

2.2.1. **Hydraulic Cement Concrete for Pavement**. Provide Class HES concrete designed to attain a minimum average flexural strength of 255 psi or a minimum average compressive strength of 1,800 psi within the designated timeframe if the timeframe designated for opening to traffic is less than 72 hr. after concrete placement. Otherwise, provide Class P concrete conforming to Item 360, "Concrete Pavement."

2.2.2. **Base Material**. Furnish cold-mix asphaltic materials for replacement base material when shown on the plans. The Engineer may waive quality control (QC) tests for base material.

2.2.3. **Asphalt Concrete**. Furnish asphalt concrete material for overlay and asphalt shoulder repair as shown on the plans. The Engineer may waive QC tests for this material.

3. EQUIPMENT

Provide tools and equipment necessary for proper execution of the work that meet the pertinent requirements of the following:

- **Item 360, "Concrete Pavement"**
- **Concrete Demolition Equipment**. Provide chipping hammers or hydro-demolition equipment for the bulk removal of concrete.

- **Concrete Lift-Out Equipment**. Provide steel chains, lift pins, and a crane or front-end loader capable of lifting the concrete and loading it onto a flatbed or dump truck.
- **Drill**. Use a maximum 40-lb. drill with tungsten carbide bits.
- **Air Compressor**. Provide compressor equipped with filters designed to remove oil from the air and capable of delivering air to remove dust and debris.

4. CONSTRUCTION

Submit for approval all materials and methods of application at least 2 weeks before beginning any repair work. Repair locations will be as indicated on the plans or as directed. Repair areas may be adjusted after removing distressed concrete. Switch the half-depth repair to the full-repair if exposed existing longitudinal bars are deficient, as approved. Compensation will be made for unexpected volumes of repair areas or changes in scope of work.

4.1. **Half-Depth Repair**. Repair locations will be as indicated on the plans or as directed. Repair boundaries should be square or rectangular with a minimum length and width of 12 in.

Saw-cut repair boundaries to a minimum depth of 1-1/2 in. Do not saw-cut longitudinal or transverse steel. If the longitudinal steel is cut, a full-depth repair may be required as directed without additional compensation.

Remove concrete from the repair area as designated. Start at the center of the repair area. Ensure all loose concrete materials are removed and only sound concrete is left in place. Increase the repair area and perform a full-depth repair as directed if longitudinal steel bars were damaged by the removal operations. No additional compensation will be made.

Clean the area to be repaired by approved methods. Remove all loose particles, dirt, deteriorated concrete, or other substances that would impair the bond of the repair material.

Mix, place, and cure in accordance with the manufacturer's recommendation when material in DMS-4655, "Concrete Repair Materials," is used. Mix, place, and cure concrete in accordance with Item 360, "Concrete Pavement." when Class S, Class P, or Class HES is used. Test Class S, Class P, and Class HES concrete to the requirements of Section 360.4.2., "Job-Control Testing."

Match the grade and alignment of existing concrete pavement unless otherwise shown on the plans. Concrete pavement may be opened to traffic when specified strength is achieved.

4.2. **Full-Depth Repair**. Repair areas identified by the Engineer. Make repair areas rectangular, at least 6 ft. long and at least 1/2 a full lane in width unless otherwise shown on the plans. Accept ownership of all removed material, and dispose of it in accordance with federal, state, and local regulations unless otherwise shown on the plans. Saw-cut and remove existing asphalt concrete overlay at least 2 ft. longer than the repair patch in each longitudinal direction when there is existing asphalt concrete overlay over the repair area.

Saw-cut the full depth through the concrete around the perimeter of the repair area before removal. Schedule work so that concrete placement follows full-depth saw-cutting by no more than 7 days unless otherwise shown on the plans or approved.

Remove the slab by lifting the slab with a minimum disturbance to the base materials and surrounding concrete. Do not spall or fracture concrete adjacent to the repair area. Saw-cut and remove additional concrete as directed, after slab removal, if distresses are found in the surrounding concrete pavement. Repair damages to concrete pavement caused by the Contractor's operation without additional compensation. Perform repairs as directed.

Remove loose or damaged base material completely, leaving no loose base material.

Recompact base materials to the satisfaction of the Engineer. Level the base layer with cold-mix asphalt to the original bottom line and grade of the concrete slab before repair concrete is placed when shown on the plans. Place concrete directly onto the compacted base layer unless otherwise directed.

Use tie bars to restore the continuity of the concrete pavement. Demonstrate, through simulated job conditions, that the bond strength of the epoxy-grouted tie bars meets a pullout strength of at least 3/4 of the yield strength of the tie bar when tested in accordance with ASTM E488 within the epoxy manufacturer's recommended curing time. Increase embedment depth and retest when necessary to meet testing requirements. Perform tie bar testing before starting repair work.

Place tie bars as shown on the plans. Drill holes into the existing concrete at least 10 in. deep unless otherwise directed. Use a drill bit with a diameter that is 1/8 in. greater than that of tie bars. Clean the holes with a wire brush and compressed air to remove all the dust and moisture. Follow the epoxy manufacturer's instructions to apply the epoxy. Insert the tip of the epoxy cartridge or the tip of the machine applicator to the end of the tie bar hole, and inject Type III, Class C epoxy to fill the entire hole. Insert tie bars.

Place new deformed reinforcing steel bars of the same size and spacing as shown on the plans for Continuously Reinforced Concrete Pavement (CRCP) repairs. Lap all longitudinal reinforcing steel at least 25 in. Provide and place approved supports to firmly hold the new reinforcing steel in place when needed.

Place dowel bars as shown on the plans for Concrete Pavement Contraction Design (CPCD) repairs. Provide and place approved supports to firmly hold the dowel bars in place.

Mix, place, cure, and test concrete to the requirements of Item 360, "Concrete Pavement," and Item 421, "Hydraulic Cement Concrete." Broom-finish the concrete surface unless otherwise shown on the plans.

Perform a timely saw-cut over the dowel bars and restore the transverse contraction joint for CPCD. Restore the existing longitudinal joints to the requirements of Section 360.4.4., "Joints."

Match the grade and alignment of existing concrete pavement. Replace any asphalt overlay and shoulder material removed with new asphalt concrete material after concrete strength requirements have been met.

Remove repair area debris from the right of way each day. Concrete pavement may be opened to traffic when specified strength is achieved.

5. MEASUREMENT

This Item will be measured by the square foot in place of the completed concrete surface area repaired.

6. PAYMENT

The work performed and the materials furnished in accordance with this Item and measured as specified under "Measurement" will be paid for at the unit price bids for "Repair of Concrete Pavement (Half-Depth)" and "Repair of Concrete Pavement (Full-Depth)." This price is full compensation for removal, stockpiling, and disposal of waste material and for equipment, materials, labor, tools, and incidentals. Asphalt concrete, base material, and curbing will not be paid for directly but will be considered subsidiary to this Item.

Item 420
Concrete Substructures

1. DESCRIPTION

Construct concrete substructures including footings, columns, caps, abutments, piers, culverts, other bridge substructure elements, and other concrete structures as indicated.

2. MATERIALS

2.1. **Concrete**. Provide concrete in accordance with Item 421, "Hydraulic Cement Concrete." Provide the class of concrete for each type of structure or unit as shown on the plans or in pertinent governing specifications.

2.2. **Grout or Mortar**. Provide grout for dowelling anchors or precast connections in accordance with DMS-4675, "Cementitious Grouts and Mortars for Miscellaneous Applications."

2.3. **Latex Curing Materials**. Provide an acrylic-polymer latex admixture (acrylic resin emulsion per DMS-4640, "Chemical Admixtures for Concrete") suitable for producing polymer-modified concrete or mortar. Do not allow latex to freeze.

2.4. **Reinforcing Steel**. Provide reinforcing steel in accordance with Item 440, "Reinforcement for Concrete."

2.5. **Expansion Joint Material**. Provide materials in accordance with DMS-6310, "Joint Sealants and Fillers."

- Provide preformed fiber expansion joint material that conforms to the dimensions shown on the plans.
- Provide preformed bituminous fiber material unless otherwise specified.
- Provide asphalt board that conforms to dimensions shown on the plans.
- Provide re-bonded neoprene filler that conforms to the dimensions shown on the plans.

2.6. **Waterstop**. Provide rubber or polyvinyl chloride (PVC) waterstops in accordance with DMS-6160, "Water Stops, Nylon Reinforced Neoprene Sheet, and Elastomeric Pads," unless otherwise shown on the plans.

2.7. **Curing Materials**. Provide membrane curing compounds in accordance with DMS-4650, "Hydraulic Cement Concrete Curing Materials and Evaporation Retardants."

Provide cotton mats that consist of a filling material of cotton "bat" or "bats" (at least 12 oz. per square yard) completely covered with unsized cloth (at least 6 oz. per square yard) stitched longitudinally with continuous parallel rows of stitching spaced at less than 4 in., or tuft both longitudinally and transversely at intervals less than 3 in. Provide cotton mats that are free from tears and in good general condition. Provide a flap at least 6 in. wide consisting of 2 thicknesses of the covering and extending along 1 side of the mat.

Provide polyethylene sheeting that is at least 4 mils thick and free from visible defects. Provide only clear or opaque white sheeting when the ambient temperature during curing exceeds 90°F or when applicable to control temperature during mass pours.

Provide burlap-polyethylene mats made from burlap impregnated on 1 side with a film of opaque white pigmented polyethylene, free from visible defects. Provide laminated mats that have at least 1 layer of an impervious material such as polyethylene, vinyl plastic, or other acceptable material (either as a solid sheet or impregnated into another fabric) and are free of visible defects.

Provide burlap material which complies with AASHTO M 182, Class 3 (10 oz. per square yard) with the following additions:

- Manila hemp may also be used to make burlap.
- Do not use burlap fabricated from bags.
- Do not use burlap containing any water soluble ingredient which will retard the setting time of concrete.

Provide used burlap complying with the requirements stated above and that has only been used previously for curing concrete. “Like new” cleanliness is not expected, but contamination with any substance foreign to the concrete curing process, such as grease or oil, will be cause for rejection.

2.8. **Epoxy**. Provide epoxy materials in accordance with DMS-6100, “Epoxies and Adhesives,” unless otherwise specified.

3. EQUIPMENT

3.1. **Transporting and Placing Equipment**. Use appropriate transporting and placing equipment such as buckets, chutes, buggies, belt conveyors, pumps, or other equipment as necessary. Ensure concrete is not transported or conveyed through equipment made of aluminum.

Use tremies to control the fall of concrete or for underwater placement. Use tremies that are watertight and of large enough diameter to allow the placement of the concrete but less than 14 in. in diameter. Construct the tremie so the bottom can be sealed and opened once the tremie has been fully charged with concrete for underwater placements.

Use pumps with lines at least 5 in. inside diameter (I.D.) where Grade 2 or smaller coarse aggregate is used, and at least 8 in. I.D. for Grade 1 coarse aggregate.

3.2. **Vibrators**. Use immersion-type vibrators for consolidation of concrete. Provide at least 1 standby vibrator for emergency use. Furnish vibrator head covered by a rubberized or elastomeric cover when used near epoxy coated reinforcing steel.

3.3. **Temperature Recording Equipment**. Use strip chart temperature recording devices, recording maturity meters in accordance with Tex-426-A, or other approved devices that are accurate to within ±2°F within the range of 32°F to 212°F for mass concrete operations, cold weather placements, and as otherwise specified.

3.4. **Artificial Heating Equipment**. Use artificial heating equipment as necessary for maintaining the concrete temperatures as specified in Section 420.4.7.11., “Placing Concrete in Cold Weather.”

3.5. **Spraying Equipment**. Use mechanically powered pressure sprayers, either air or airless, with appropriate atomizing nozzles for the application of membrane curing. Use hand-pressurized spray equipment with 2 or 3 fan-spray nozzles if approved. Ensure the spray from each nozzle overlaps the spray from adjacent nozzles by approximately 50%.

3.6. **Concrete Testing Equipment**. Provide testing equipment for use by the Engineer in accordance with Section 421.3.3., “Testing Equipment.”

4. CONSTRUCTION

Obtain approval for proposed construction methods before starting work. Approval of construction methods and equipment does not relieve the Contractor’s responsibility for safety or correctness of methods, adequacy of equipment, or completion of work in full accordance with the Contract.

Unless otherwise shown on the plans, it is the Contractor’s option to perform testing on structural concrete (structural classes of concrete are identified in Table 8 of Section 421.4.1., “Classification of Concrete Mix Designs,”) to determine the in-situ strength to address the schedule restrictions in Section 420.4.1., “Schedule Restrictions.” The Engineer may require the Contractor to perform this testing for concrete placed in cold weather. Make enough test specimens for Contractor-performed testing to ensure strength

requirements are met for the operations listed in Section 420.4.1., "Schedule Restrictions." Make at least 1 set of test specimens for each element cast each day. Cure these specimens under the same conditions as the portion of the structure involved for all stages of construction. Ensure safe handling, curing, and storage of all test specimens. Provide testing personnel, and sample and test the hardened concrete in accordance with Section 421.4.8., "Sampling and Testing of Concrete." The maturity method, Tex-426-A, may be used for in-situ strength determination for schedule restrictions if approved. Coring will not be allowed for in-situ strength determination for schedule restrictions. Provide the Engineer the opportunity to witness all testing operations. Report all test results to the Engineer.

If the Contractor does not wish to perform schedule restriction testing, the Engineer's 7-day lab-cured tests, performed in accordance with Article 421.5., "Acceptance of Concrete," will be used for schedule restriction determinations. The Engineer may require additional time for strength gain to account for field curing conditions such as cold weather.

4.1. **Schedule Restrictions**. Construct and open completed structures to traffic with the following limitations unless otherwise shown on the plans:

4.1.1. **Setting Forms**. Attain at least 2,500 psi compressive strength before erecting forms on concrete footings supported by piling or drilled shafts, or on individual drilled shafts. Erect forms on spread footings and culvert footings after the footing concrete has aged at least 2 curing days as defined in Section 420.4.10., "Curing Concrete." Place concrete only after the forms and reinforcing steel have been inspected by the Engineer.

Support tie beam or cap forms by falsework on previously placed tie beams only if the tie beam concrete has attained a compressive strength of 2,500 psi and the member is properly supported to eliminate stresses not provided for in the design. Maintain curing as required until completion of the curing period.

Place superstructure forms or falsework on the substructure only if the substructure concrete has attained a compressive strength of 3,000 psi.

4.1.2. **Removal of Forms and Falsework**. Keep in place weight-supporting forms and falsework for bridge components and culvert slabs until the concrete has attained a compressive strength of 2,500 psi in accordance with Section 420.4.11., "Removal of Forms and Falsework." Keep all forms for mass placements in place for 4 days following concrete placement unless otherwise approved based on the outcome of the heat control plan outlined in Section 420.4.7.14., "Mass Placements."

4.1.3. **Placement of Superstructure Members**. Erect or place superstructure members or precast substructure members only after the substructure concrete has attained a compressive strength of 3,000 psi.

4.1.4. **Opening to Traffic**. Direct traffic culverts may be opened to construction traffic when the design strength specified in Section 421.4.1., "Classification of Concrete Mix Design," has been attained if curing is maintained. Obtain approval before opening direct traffic culverts to the traveling public. Open other noncritical structural and nonstructural concrete for service upon the completion of curing unless otherwise specified or directed.

4.1.5. **Post-Tensioned Construction**. Ensure strength requirements on the plans for structural elements designed to be post-tensioned are met for stressing and staged loading of structural elements.

4.1.6. **Backfilling**. Backfill in accordance with Section 400.3.3., "Backfill."

4.2. **Plans for Falsework and Forms**. Submit plans for falsework and forms for the following items: vertical forms for piers and single column bents; load supporting forms for caps and tie-beams; form attachments for bridges to be widened; and other items as indicated or directed. Provide design calculations when requested. Show all essential details of proposed forms, falsework, and bracing. Have a licensed professional engineer design, seal, and sign these plans. Department approval is not required, except as noted in Table 1 of Item 5, "Control of the Work," when forms or falsework are located such that public safety can be affected, but the Department reserves the right to request modifications to the plans. The Contractor is responsible for the adequacy of these plans. Design job-fabricated formwork assuming a weight of 150 pcf for concrete, and

include a liveload allowance of 50 psf of horizontal surface of the form. Do not exceed 125% of the allowable stresses used by the Department for the design of structures.

4.3. **Falsework**. Design and construct falsework to safely carry the maximum anticipated loads, including wind loads, and to provide the necessary rigidity. Consult AASHTO's *Guide Design Specifications for Bridge Temporary Works* and *Construction Handbook for Bridge Temporary Works* for falsework and shoring information not indicated below. Submit details in accordance with Section 420.4.2., "Plans for Falsework and Forms."

Design job-fabricated falsework assuming a weight of 150 pcf for concrete, and include a minimum liveload allowance of 50 psf of horizontal surface of the form. Do not exceed 125% of the allowable stresses used by the Department for the design of structures.

Do not exceed the manufacturer's maximum allowable working loads for moment and shear or end reaction for commercially produced structural units used in falsework. Include a minimum liveload allowance of 35 psf of horizontal form surface in determining the maximum allowable working load for commercially produced structural units.

Provide timber that is sound, in good condition, and free from defects that would impair its strength. Provide timber that meets or exceeds the species, size, and grade requirements in the submitted falsework plans.

Provide wedges made of hardwood or metal in pairs to adjust falsework to desired elevations to ensure even bearing. Do not use wedges to compensate for incorrectly cut bearing surfaces.

Use sills or grillages large enough to support the superimposed load without settlement. Take precautions to prevent settling of the supporting material unless the sills or grillages are founded on solid rock, shale, or other hard materials.

Place falsework that cannot be founded on a satisfactory spread footing on piling or drilled shafts with enough bearing capacity to support the superimposed load without settlement. Drive falsework piling to the required resistance determined by the applicable formula in Item 404, "Driving Piling." Design drilled shafts for falsework to carry the superimposed load using both skin friction and point bearing.

Weld in conformance with Item 448, "Structural Field Welding." Securely brace each falsework bent to provide the stiffness required, and securely fasten the bracing to each pile or column it crosses.

Remove falsework when it is no longer required or as indicated on the submitted falsework plan. Pull or cut off foundations for falsework at least 2 ft. below finished ground level. Completely remove falsework, piling, or drilled shafts in a stream, lake, or bay to the approved limits to prevent obstruction to the waterway.

4.4. **Forms**. Submit formwork plans in accordance with Section 420.4.2., "Plans for Falsework and Forms."

4.4.1. **General**. Provide forms of either timber or metal except where otherwise specified or permitted.

Design forms for the pressure exerted by a liquid weighing 150 pcf. Take the rate of concrete placement into consideration in determining the depth of the equivalent liquid. Include a minimum liveload allowance of 50 psf of horizontal surface for job-fabricated forms. Do not exceed 125% of the Department's allowable stresses for the design of structures.

Do not exceed the manufacturer's maximum allowable working loads for moment and shear or end reaction for commercially produced structural units used for forms. Include a minimum liveload allowance of 35 psf of horizontal form surface in determining the maximum allowable working load for commercially produced structural units.

Provide steel forms for round columns unless otherwise approved. Refer to Item 427, "Surface Finishes for Concrete," for additional requirements for off-the-form finishes.

Provide commercial form liners for imprinting a pattern or texture on the concrete surface as shown on the plans and specified in Section 427.4.3.5., "Form Liner Finish."

Provide forming systems that are practically mortar-tight, rigidly braced, and strong enough to prevent bulging between supports, and maintain them to the proper line and grade during concrete placement. Maintain forms in a manner that prevents warping and shrinkage. Do not allow offsets at form joints to exceed 1/16 in.

Use only material that is inert, non-biodegradable, and nonabsorptive for forms to be left in place.

Construct all forms to permit their removal without marring or damaging the concrete. Clean all forms and footing areas of any extraneous matter before placing concrete. Provide openings in forms if needed for the removal of laitance or foreign matter.

Treat the facing of all forms with bond-breaking coating of composition that will not discolor or injuriously affect the concrete surface. Take care to prevent coating of the reinforcing steel.

Complete all preparatory work before requesting permission to place concrete.

Cease placement if the forms show signs of bulging or sagging at any stage of the placement, and remove the portion of the concrete causing this condition immediately as directed. Reset the forms and securely brace them against further movement before continuing the placement.

4.4.2. **Timber Forms**. Provide properly seasoned, good-quality lumber that is free from imperfections that would affect its strength or impair the finished surface of the concrete. Provide timber or lumber that meets or exceeds the requirements for species and grade in the submitted formwork plans.

Maintain forms or form lumber that will be reused so it stays clean and in good condition. Do not use any lumber that is split, warped, bulged, or marred, or that has defects in any way that will produce inferior work. Promptly remove such lumber from the work.

Provide form lining for all formed surfaces except:

- the inside of culvert barrels, inlets, manholes, and box girders;
- surfaces that are subsequently covered by backfill material or are completely enclosed; and
- any surface formed by a single finished board or by plywood.

Provide form lining of an approved type such as masonite or plywood. Do not provide thin membrane sheeting such as polyethylene sheets for form lining.

Use plywood at least 3/4 in. thick. Place the grain of the face plies on plywood forms parallel to the span between the supporting studs or joists unless otherwise indicated on the submitted form drawings.

Use plywood for forming surfaces that remain exposed that meets the requirements for B-B Plyform Class I or Class II Exterior of the U.S. Department of Commerce Voluntary Product Standard PS 1.

Space studs and joists so the facing form material remains in true alignment under the imposed loads.

Space wales closely enough to hold forms securely to the designated lines, scabbed at least 4 ft. on each side of joints to provide continuity. Place a row of wales near the bottom of each placement.

Place facing material with parallel and square joints, securely fastened to supporting studs.

Place forms with the form panels symmetrical (long dimensions set in the same direction) for surfaces exposed to view and receiving only an ordinary surface finish as defined in Section 420.4.13., "Ordinary Surface Finish." Make horizontal joints continuous.

Make molding for chamfer strips or other uses of materials of a grade that will not split when nailed and can be maintained to a true line without warping. Dress wood molding on all faces. Fill forms at all sharp corners and edges with triangular chamfer strips measuring 3/4 in. on the sides unless otherwise shown on the plans.

Use metal form ties of an approved type or a satisfactory substitute of a type that permits ease of removal of the metal to hold forms in place. Cut back wire ties at least 1/2 in. from the face of the concrete.

Use devices to hold metal ties in place that are able to develop the strength of the tie and adjust to allow for proper alignment.

Entirely remove metal and wooden spreaders that separate the forms as the concrete is being placed.

Provide adequate clean-out openings for narrow walls and other locations where access to the bottom of the forms is not readily attainable.

4.4.3. **Metal Forms**. Requirements for timber forms regarding design, mortar-tightness, filleted corners, beveled projections, bracing, alignment, removal, reuse, and wetting also apply to metal forms except metal forms do not require lining unless specifically noted on the plans.

Use form metal thick enough to maintain the true shape without warping or bulging. Countersink all bolt and rivet heads on the facing sides. Design clamps, pins, or other connecting devices to hold the forms rigidly together and to allow removal without damage to the concrete. Use metal forms that present a smooth surface and line up properly. Keep metal free from rust, grease, and other foreign materials.

4.5. **Drains**. Install and construct weep holes and roadway drains as shown on the plans.

4.6. **Placing Reinforcement and Post-Tensioning**. Place reinforcement as provided in Item 440, "Reinforcement for Concrete." Do not weld reinforcing steel supports to other reinforcing steel except where shown on the plans.

Place post-tensioning ducts, anchorages, and other hardware in accordance with the approved prestressing details and Item 426, "Post-Tensioning." Keep ducts free of obstructions until all post-tensioning operations are complete.

4.7. **Placing Concrete**. Give the Engineer sufficient advance notice before placing concrete in any unit of the structure to permit the inspection of forms, reinforcing steel placement, and other preparations.

Do not place concrete when impending weather conditions would impair the quality of the finished work. Place concrete in early morning or at night or adjust the placement schedule for more favorable weather when conditions of wind, humidity, and temperature are such that concrete cannot be placed without the potential for weather-related distress.

Adequately illuminate the entire placement site as approved when mixing, placing, and finishing concrete in non-daylight hours.

Furnish adequate shelter to protect the concrete against damage from rainfall or freezing temperatures as outlined in this Item if changes in weather conditions require protective measures after work starts. Continue operations during rainfall only if approved. Use protective coverings for the material stockpiles. Cover aggregate stockpiles only to the extent necessary to control the moisture conditions in the aggregates.

Allow at least 1 curing day after the concrete has achieved initial set before placing strain on projecting reinforcement to prevent damage to the concrete.

4.7.1. **Placing Temperature**. Place concrete according to the following temperature limits for the classes of concrete defined in Section 421.4.1., "Classification of Concrete Mix Designs."

- Place Class C, F, H, K, or SS concrete only when its temperature at time of placement is between 50°F and 95°F. Increase the minimum placement temperature to 60°F if ground-granulated blast furnace (GGBF) slag is used in the concrete.
- Place Class S concrete, used in this Item only as indicated for culvert top slabs, only when its temperature is between 50°F and 85°F. Increase the minimum placement temperature to 60°F if ground-granulated blast furnace (GGBF) slag is used in the concrete.
- Place Class A, B, and D concrete only when its temperature at the time of placement is greater than 50°F.
- Place mass concrete in accordance with Section 420.4.7.14., "Mass Placements," only when its temperature at the time of placement is between 50°F and 75°F.

4.7.2. **Transporting Time**. Begin the discharge of concrete delivered in truck mixers within the times listed in Table 14 of Item 421, "Hydraulic Cement Concrete."

4.7.3. **Workability of Concrete**. Place concrete with a slump as specified in Section 421.4.2.5., "Slump." Water may be added to the concrete before discharging any concrete from the truck to adjust for low slump provided that the maximum mix design water–cement ratio is not exceeded. Mix concrete in accordance with Section 421.4.6., "Mixing and Delivering Concrete," after introduction of any additional water or chemical admixtures. Do not add water or chemical admixtures after any concrete has been discharged.

4.7.4. **Transporting Concrete**. Transport concrete by buckets, chutes, buggies, belt conveyors, pumps, or other methods.

Protect concrete transported by conveyors from sun and wind to prevent loss of slump and workability. Shade or wrap with wet burlap pipes through which concrete is pumped as necessary to prevent loss of slump and workability.

Arrange and use chutes, troughs, conveyors, or pipes so the concrete ingredients will not be separated. Terminate such equipment in vertical downspouts when necessary to prevent segregation. Extend open troughs and chutes, if necessary, down inside the forms or through holes left in the forms.

Keep all transporting equipment clean and free from hardened concrete coatings. Discharge water used for cleaning clear of the concrete.

4.7.5. **Preparation of Surfaces**. Thoroughly wet all forms and hardened concrete on which concrete is to be placed before placing concrete on them. Remove any remaining puddles of excess water before placing concrete. Provide surfaces that are in a moist, saturated surface-dry condition when concrete is placed on them.

Ensure the subgrade or foundation is moist before placing concrete on grade. Lightly sprinkle the subgrade if dry.

4.7.6. **Expansion Joints**. Construct joints and devices to provide for expansion and contraction in accordance with plan details.

Use light wire or nails to anchor any preformed fiber joint material to the concrete on 1 side of the joint.

Ensure finished joints conform to the plan details with the concrete sections completely separated by the specified opening or joint material.

Remove all concrete within the joint opening soon after form removal and again where necessary after surface finishing to ensure full effectiveness of the joint.

4.7.7. **Construction Joints**. A construction joint is the joint formed by placing plastic concrete in direct contact with concrete that has attained its initial set. Monolithic placement means the manner and sequence of concrete placing does not create a construction joint.

Make construction joints of the type and at the locations shown on the plans. Additional joints in other members are not permitted without approval. Place authorized additional joints using details equivalent to those shown on the plans for joints in similar locations.

Make construction joints square and normal to the forms unless otherwise required. Use bulkheads in the forms for all vertical joints.

Thoroughly roughen the top surface of a concrete placement terminating at a horizontal construction joint as soon as practical after initial set is attained.

Thoroughly clean the hardened concrete surface of all loose material, laitance, dirt, and foreign matter, and saturate it with water. Remove all free water and moisten the surface before concrete or bonding grout is placed against it. Ensure the surface of the existing concrete is in a saturated surface-dry condition (SSD) just before placing subsequent concrete. Wet the existing concrete by ponding water on the surface for 24 hr. before placing subsequent concrete. Use high-pressure water blasting if ponding is not possible to achieve SSD conditions 15 to 30 min. before placing the concrete. An SSD condition is achieved when the surface remains damp when exposed to sunlight for 15 min.

Draw forms tight against the existing concrete to avoid mortar loss and offsets at joints.

Bonding agents are not required unless indicated otherwise. Coat the joint surface with bonding mortar, grout, epoxy, or other material if a bonding agent is required as indicated on the plans. Provide Type V epoxy per DMS-6100, “Epoxies and Adhesives,” for bonding fresh concrete to hardened concrete. Place the bonding epoxy on a clean, dry surface, and place the fresh concrete while the epoxy is still tacky. Place bonding mortar or grout on a surface that is SSD, and place the concrete before the bonding mortar or grout dries. Place other bonding agents in accordance with the manufacturer’s recommendations.

4.7.8. **Handling and Placing**. Minimize segregation of the concrete and displacement of the reinforcement when handling and placing concrete. Produce a uniform, dense compact mass.

Ensure concrete free-falls no more than 5 ft. except in the case of drilled shafts, thin walls such as in culverts, or as allowed by other Items. Remove any hardened concrete splatter ahead of the plastic concrete.

Fill each part of the forms by depositing concrete as near its final position as possible. Do not deposit large quantities of concrete at 1 point and run or move the concrete along to fill the forms.

Deposit concrete in the forms in layers of suitable depth but no more than 36 in. deep unless otherwise permitted.

Avoid cold joints in a monolithic placement. Sequence successive layers or adjacent portions of concrete so they can be vibrated into a homogeneous mass with the previously placed concrete before it sets. Allow no more than 1 hr. to elapse between adjacent or successive placements of concrete when re-vibration of the concrete is shown on the plans except as otherwise allowed by an approved placing procedure. This time limit may be extended by 1/2 hr. if the concrete contains at least the minimum recommended dosage of a Type B or D admixture.

4.7.9. **Consolidation**. Carefully consolidate concrete and flush mortar to the form surfaces with immersion type vibrators. Do not use vibrators that operate by attachment to forms or reinforcement except where approved on steel forms.

Vibrate the concrete immediately after deposit. Systematically space points of vibration to ensure complete consolidation and thorough working of the concrete around the reinforcement, embedded fixtures, and into the corners and angles of the forms. Insert the vibrators vertically where possible. Vibrate the entire depth of

each lift, allowing the vibrator to penetrate several inches into the preceding lift. Do not use the vibrator to move the concrete to other locations in the forms. Do not drag the vibrator through the concrete. Thoroughly consolidate concrete along construction joints by operating the vibrator along and close to but not against the joint surface. Continue the vibration until the concrete surrounding reinforcements and fixtures is completely consolidated. Hand-spade or rod the concrete if necessary to ensure flushing of mortar to the surface of all forms.

4.7.10. **Installation of Dowels and Anchor Bolts**. Install dowels and anchor bolts by casting them in-place or by grouting with grout, epoxy, or epoxy mortar unless noted otherwise. Form or drill holes for grouting. Follow the manufacturer's recommended installation procedures for pre-packaged grout or epoxy anchor systems. Test anchors if required on the plans or by other Items.

Drill holes for anchor bolts to accommodate the bolt embedment required by the plans. Make holes for dowels at least 12 in. deep unless otherwise shown on the plans. Make the hole diameter at least twice the dowel or bolt diameter, but not exceeding the dowel or bolt diameter plus 1-1/2 in. when using cementitious grout or epoxy mortar. Make the hole diameter 1/16 to 1/4 in. greater than the dowel or bolt diameter when using neat epoxy unless indicated otherwise by the epoxy manufacturer.

Thoroughly clean holes of all loose material, oil, grease, or other bond-breaking substance, and blow them clean with filtered compressed air. Use a wire brush followed by oil-free compressed air to remove all loose material from the holes, repeating as necessary until no more material is removed. Ensure holes are in a surface-dry condition when epoxy type materials are used and in a surface-moist condition when cementitious grout is used. Develop and demonstrate for approval a procedure for cleaning and preparing the holes for installation of the dowels and anchor bolts. Completely fill the void between the hole and dowel or bolt with grouting material. Follow exactly the requirements for cleaning outlined in the product specifications for pre-packaged systems.

Provide hydraulic cement grout for cast-in-place or grouted systems in accordance with DMS-4675, "Cementitious Grouts and Mortars for Miscellaneous Applications." Provide a Type III epoxy per DMS-6100, "Epoxies and Adhesives," when neat epoxy is used for anchor bolts or dowels. Provide Type VIII epoxy per DMS-6100, "Epoxies and Adhesives," when an epoxy grout is used. Provide grout, epoxy, or epoxy mortar as the binding agent unless otherwise indicated on the plans.

Provide other anchor systems as required on the plans.

4.7.11. **Placing Concrete in Cold Weather**. Protect concrete placed under weather conditions where weather may adversely affect results. Permission given by the Engineer for placing during cold weather does not relieve the Contractor of responsibility for producing concrete equal in quality to that placed under normal conditions. Remove and replace concrete as directed at the Contractor's expense if it is determined unsatisfactory due to poor conditions.

Do not place concrete in contact with any material coated with frost or with a temperature of 32°F or lower. Do not place concrete when the ambient temperature in the shade is below 40°F and falling unless approved. Place concrete when the ambient temperature in the shade is at least 35°F and rising or above 40°F.

Provide and install recording thermometers, maturity meters, or other suitable temperature measuring devices to verify all concrete is effectively protected as follows:

- Maintain the temperature at all surfaces of concrete in bents, piers, culvert walls, retaining walls, parapets, wingwalls, top slabs of non-direct traffic culverts, and other similar formed concrete at or above 40°F for 72 hr. from the time of placement.
- Maintain the temperature of all other concrete, including the bottom slabs (footings) of culverts, placed on or in the ground above 32°F for 72 hr. from the time of placement.

Use additional covering, insulated forms, or other means and, if necessary, supplement the covering with artificial heating. Avoid applying heat directly to concrete surfaces. Cure as specified in Section 420.4.10., "Curing Concrete," during this period until all requirements for curing have been satisfied.

Have all necessary heating and covering material ready for use before permission is granted to begin placement when impending weather conditions indicate the possible need for temperature protection.

4.7.12. **Placing Concrete in Hot Weather**. Keep the concrete at or below the maximum temperature at time of placement as specified in Section 420.4.7.1., "Placing Temperature." Sprinkle and shade aggregate stockpiles or use ice, liquid nitrogen systems, or other approved methods as necessary to control the concrete temperature.

4.7.13. **Placing Concrete in Water**. Deposit concrete in water only when shown on the plans or with approval. Make forms or cofferdams tight enough to prevent any water current passing through the space in which the concrete is being deposited. Do not pump water during the concrete placing or until the concrete has set for at least 36 hr.

Place the concrete with a tremie or pump, or use another approved method, and do not allow it to fall freely through the water or disturb it after it is placed. Keep the concrete surface level during placement.

Support the tremie or operate the pump so it can be easily moved horizontally to cover all the work area and vertically to control the concrete flow. Submerge the lower end of the tremie or pump hose in the concrete at all times. Use continuous placing operations until the work is complete.

Design the concrete mix in accordance with Item 421, "Hydraulic Cement Concrete," with a minimum cement content of 650 lb. per cubic yard for concrete to be placed under water. Include an anti-washout admixture in the mix design as necessary to produce a satisfactory finished product.

4.7.14. **Mass Placements**. Develop and obtain approval for a heat control plan for monolithic placements designated on the plans as mass concrete to ensure the following during the heat dissipation period:

- the temperature differential between the central core of the placement and the exposed concrete surface does not exceed 35°F and
- the temperature at the central core of the placement does not exceed 160°F.

Use the ConcreteWorks© software available from the Department, or another approved method based on the guidelines in ACI 207, "Mass Concrete," to develop the heat control plan. The Department will make available technical assistance on the use of ConcreteWorks©. Develop the heat control plan using historical temperature ranges for the anticipated time of the mass placement. Re-create the plan if the work schedule shifts by more than one month.

The heat control plan may include a combination of the following elements:

- selection of concrete ingredients including aggregates, gradation, and cement types, to minimize heat of hydration;
- use of ice or other concrete cooling ingredients;
- use of liquid nitrogen dosing systems;
- controlling rate or time of concrete placement;
- use of insulation or supplemental external heat to control heat loss;
- use of supplementary cementing materials;
- use of a cooling system to control the core temperature; or
- vary the duration formwork remains in place.

Furnish and install 2 pairs of temperature recording devices, maturity meters, or other approved equivalent devices. Install devices to measure the surface temperature no more than 3 in. from the surface. Install devices to measure the core temperature a distance of half the least dimension from the nearest surface near the point of maximum predicted heat. Use these devices to simultaneously measure the temperature of

the concrete at the core and the surface. Maintain temperature control methods for 4 days unless otherwise approved based on the submitted heat control plan. Do not use maturity meters to predict strength of mass concrete. Revise the heat control plan as necessary to maintain the temperature limitations shown above.

If the core temperature exceeds 160°F, the mass concrete element will be subject to review and acceptance by the Engineer using forensic analyses to determine its potential reduction in service life or performance. Proceed with subsequent construction on the affected element only when notified regarding acceptance. Repair any resulting cracking if the temperature differential between the central core of the placement and the nearest concrete surface exceeds 35°F at no expense to the Department and revise the heat control plan as necessary to prevent further occurrences.

4.7.15. **Placing Concrete in Foundation and Substructure**. Do not place concrete in footings until the depth and character of the foundation has been inspected and permission has been given to proceed.

Place concrete footings upon seal concrete after the cofferdams are free from water and the seal concrete is cleaned. Perform any necessary pumping or bailing during the concreting from a suitable sump located outside the forms.

Construct or adjust all temporary wales or braces inside cofferdams as the work proceeds to prevent unauthorized construction joints.

Omit forms when footings can be placed in a dry excavation without the use of cofferdams, if approved, and fill the entire excavation with concrete to the elevation of the top of footing.

Place concrete in columns monolithically between construction joints unless otherwise directed. Columns and caps or tie beams supported on them may be placed in the same operation or separately. Allow for settlement and shrinkage of the column concrete, if placed in the same operation, by placing it to the lower level of the cap or tie beam, and delay placement between 1 and 2 hr. before proceeding with the cap or tie beam placement.

4.7.16. **Placing Concrete in Box Culverts**. Allow between 1 and 2 hr. to elapse where the top slab and walls are placed monolithically in culverts more than 4 ft. in clear height before placing the top slab to allow for settlement and shrinkage in the wall concrete.

Accurately finish the footing slab at the proper time to provide a smooth uniform surface. Finish top slabs that carry direct traffic as specified in Item 422, “Concrete Superstructures.” Give top slabs of fill type culverts a float finish.

4.8. **Extending Existing Substructures**. Verify pertinent dimensions and elevations of the existing structure before ordering any required materials.

4.8.1. **Removal**. Remove portions of the existing structure to the lines and dimensions shown on the plans or as directed. Dispose of these materials as shown on the plans or as directed. Repair any portion of the remaining structure damaged as a result of the construction.

Do not use explosives to remove portions of the existing structure unless approved in writing. Do not use a demolition ball, other swinging weight, or impact equipment unless shown on the plans. Use pneumatic or hydraulic tools for final removal of concrete at the “break” line. Use removal equipment, as approved, that will not damage the remaining concrete.

4.8.2. **Reuse of Removed Portions of Structure**. Detach and remove all portions of the old structure that are to be incorporated into the extended structure to the lines and details as specified on the plans or as directed. Move the unit to be reused to the new location specified using approved methods. Place the reinforcement and extension concrete according to the plan details.

4.8.3. **Splicing Reinforcing Steel**. Splice new reinforcing bars to exposed bars in the existing structure using lap splices in accordance with Item 440, “Reinforcement for Concrete,” unless otherwise shown on the plans. The new reinforcing steel does not need to be tied to the existing steel where spacing or elevation does not

match that of the existing steel provided the lap length is attained. Weld in accordance with Item 448, when welded splices are permitted. Install any required dowels in accordance with Section 420.4.7.10., "Installation of Dowels and Anchor Bolts."

4.8.4. **Concrete Preparation**. Roughen and clean concrete surfaces that are in contact with new construction before placing forms. Prepare these construction joint surfaces in accordance with Section 420.4.7.7., "Construction Joints."

4.9. **Treatment and Finishing of Horizontal Surfaces**. Strike off to grade and finish all unformed upper surfaces. Do not use mortar topping for surfaces constructed under this Section.

Float the surface with a suitable float after the concrete has been struck off.

Slope the tops of caps and piers between bearing areas from the center slightly toward the edge, and slope the tops of abutment and transition bent caps from the backwall to the edge, as directed, so water drains from the surface. Give the concrete a smooth trowel finish. Construct bearing areas for steel units in accordance with Section 441.3.11.6., "Bearing and Anchorage Devices." Give the bearing area under the expansion ends of concrete slabs and slab and girder spans a steel-trowel finish to the exact grades required. Give bearing areas under elastomeric bearing pads or nonreinforced bearing seat buildups a textured, wood float finish. Do not allow the bearing area to vary from a level plane more than 1/16 in. in all directions.

Cast bearing seat buildups or pedestals for concrete units integrally with the cap or a construction joint. Provide a latex-based mortar, an epoxy mortar, or an approved proprietary bearing mortar for bearing seat buildups cast with a construction joint. Mix mortars in accordance with the manufacturer's recommendations. Construct pedestals of Class C concrete, reinforced as shown on the plans or as indicated in Figure 1 and Figure 2. The Engineer of Record will design pedestals higher than 12 in.

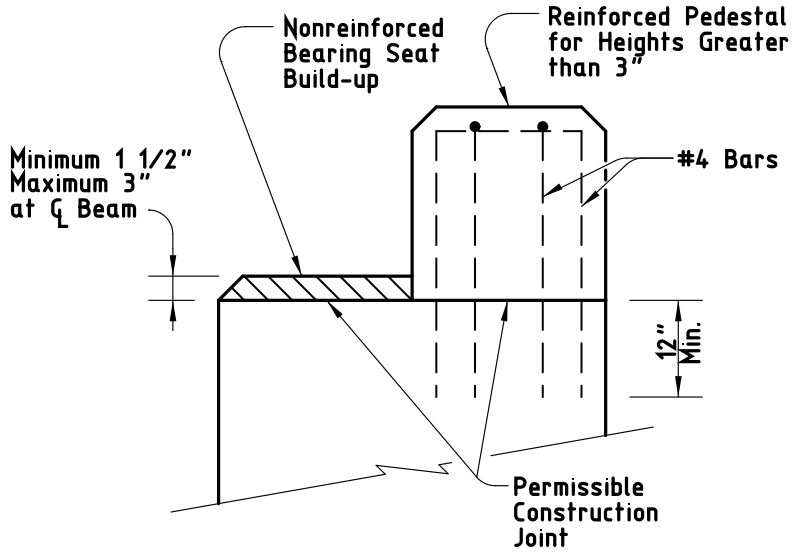

Figure 1
Section through Bearing Seat Buildups

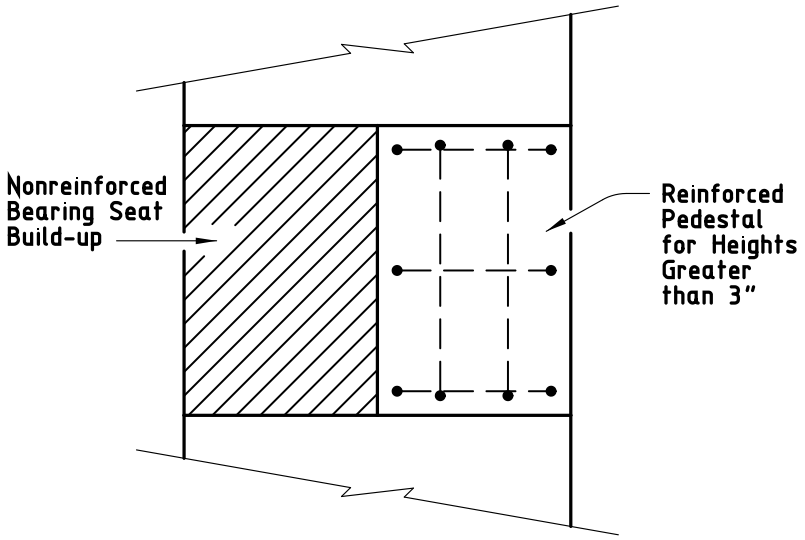

Figure 2
Plan View of Bearing Seat Buildups

4.10. **Curing Concrete**. Obtain approval of the proposed curing methods, equipment, and materials before placing concrete. The Engineer may require the same curing methods for like portions of a single structure. Inadequate curing or facilities may delay all concrete placements on the job until remedial action is taken.

A curing day is a calendar day when the temperature, taken in the shade away from artificial heat, is above 50°F for at least 19 hr. or, on colder days if the temperature of all surfaces of the concrete is maintained above 40°F, for the entire 24 hr. The required curing period begins when all concrete has attained its initial set unless indicated otherwise. Tex-440-A may be used to determine when the concrete has attained its initial set.

Cure all concrete for 4 consecutive days except as allowed for the curing options listed below. Use form or membrane curing for vertical surfaces unless otherwise approved. Use only water curing for horizontal surfaces of HPC or mass concrete. Use water or membrane curing for horizontal or unformed surfaces for all other concrete.

Use one of the following curing options for vertical surfaces, unless indicated otherwise.

- Form cure for 48 hr. after placement.
- Form cure for 12 hr. after placement followed by membrane curing.
- For HPC Concrete, form cure for 48 hr. after placement followed by membrane curing.
- For mass concrete, form cure as required by the heat control plan followed by membrane curing if forms are removed before 4 days.

Apply membrane curing, if used, within 2 hr. of form removal.

Use only water curing in accordance with this Section for the top surface of any concrete unit upon which concrete is to be placed and bonded at a later interval (stub walls, caps with backwalls, risers, etc.).

Cure all other concrete as specified in the pertinent Items. Use the following methods for curing concrete, subject to the requirements of this Item.

4.10.1. **Form Curing**. When forms are left in intimate contact with the concrete, other curing methods are not required except for exposed surfaces and for cold weather protection. Use another approved curing method if forms are removed before the 4-day required curing period.

4.10.2. **Water Curing**. Keep all exposed surfaces of the concrete wet continuously for the required curing time. Use water curing in accordance with concrete mixing water in Section 421.2.5., "Water." Do not use seawater or water that stains or leaves an unsightly residue.

4.10.2.1. **Blankets**. Keep the concrete continuously wet by maintaining wet cotton or burlap mats in direct contact with the concrete for the required curing time. Weight the mats adequately to provide continuous contact with all concrete. Cover surfaces that cannot be cured by direct contact with mats, forming an enclosure well anchored to the forms or ground so outside air cannot enter the enclosure. Provide sufficient moisture inside the enclosure to keep all surfaces of the concrete wet.

4.10.2.2. **Water Spray**. Overlap sprays or sprinklers to keep all unformed surfaces continuously wet.

4.10.2.3. **Ponding**. Cover the surfaces with at least 2 in. of clean granular material, kept wet at all times, or at least 1 in. deep water. Use a dam to retain the water or saturated granular material.

4.10.3. **Membrane Curing**. Choose either Type 1-D or Type 2 membrane-curing compound unless otherwise shown on the plans. Use the same type of curing compound on an individual member.

Apply membrane curing just after free moisture has disappeared at a rate of approximately 180 sq. ft. per gallon. Do not spray curing compound on projecting reinforcing steel or concrete that will later form a construction joint. Do not apply membrane curing to dry surfaces. Dampen formed surfaces and surfaces that have been given a first rub so they are moist at the time of application of the membrane.

Leave the film unbroken for the minimum curing period specified when membrane is used for complete curing. Correct damaged membrane immediately by reapplication of membrane. Polyethylene sheeting, burlap-polyethylene mats, or laminated mats in close contact with the concrete surfaces are equivalent to membrane curing.

4.11. **Removal of Forms and Falsework**. Remove forms for vertical surfaces after the concrete has aged a minimum of 12 hr. after initial set provided the removal can be done without damage to the concrete unless otherwise directed. Keep forms for mass placements in place for 4 days following concrete placement unless otherwise approved based on the outcome of the heat control plan outlined in Section 420.4.7.14., "Mass Placements."

Leave in place weight-supporting forms and falsework spanning more than 1 ft. for all bridge components and culvert slabs except as directed otherwise until the concrete has attained a compressive strength of 2,500 psi. Remove forms for other structural components as necessary.

Remove inside forms (walls and top slabs) for box culverts and sewers after concrete has attained a compressive strength of 1,800 psi if an approved overhead support system is used to transfer the weight of the top slab to the walls of the box culvert or sewer before removal of the support provided by the forms.

Forms or parts of forms may be removed only if constructed to permit removal without disturbing forms or falsework required to be left in place for a longer period on other portions of the structure.

Remove all metal appliances used inside forms for alignment to a depth of at least 1/2 in. from the concrete surface. Make the appliances so metal may be removed without undue chipping or spalling of the concrete, and so it leaves a smooth opening in the concrete surface when removed. Do not burn off rods, bolts, or ties.

Remove all forms and falsework unless otherwise directed.

4.12. **Defective Work**. Repair defective work as soon as possible. Remove and replace at the expense of the Contractor any defect that cannot be repaired to the satisfaction of the Engineer.

4.13. **Ordinary Surface Finish**. Apply an ordinary surface finish to all concrete surfaces. Provide flat or textured surfaces as specified with uniform appearance. Address defects and surface irregularities not consistent with the intent of the expected finish by the following:

- Chip away all loose or broken material to sound concrete where porous, spalled, or honeycombed areas are visible after form removal.
- Repair spalls in accordance with the procedures outlined in the *Concrete Repair Manual* available on the Department's website.
- Clean and fill holes or spalls caused by the removal of form ties, etc., with latex grout, cement grout, or epoxy grout as approved. Fill only the holes. Do not blend the patch with the surrounding concrete. On surfaces to receive a rub finish in accordance with Item 427, "Surface Finishes for Concrete," chip out exposed parts of metals chairs to a depth of 1/2 in. and repair the surface.
- Remove all fins, rust staining, runs, drips, or mortar from surfaces that will be exposed. Smooth all form marks and chamfer edges by grinding or dry-rubbing.
- Ensure all repairs are dense, well-bonded, and properly cured. Finish exposed large repairs to blend with the surrounding concrete where a higher class of finish is not specified.

Apply an ordinary surface finish as the final finish to the following exposed surfaces unless noted otherwise:

- inside and top of inlets,
- inside and top of manholes,
- inside of sewer appurtenances, and
- inside of culvert barrels.

Form marks and chamfer edges do not need to be smoothed for the inside of culvert barrels.

5. MEASUREMENT

This Item will be measured by the cubic yard, square yard, foot, square foot, or by each structure.

5.1. **General**. Concrete quantities will be based on the dimensions shown on the plans or those established in writing by the Engineer.

In determining quantities, no deductions will be made for chamfers less than 2 in. or for embedded portions of steel or prestressed concrete beams, piling, anchor bolts, reinforcing steel, drains, weep holes, junction boxes, electrical or telephone conduit, ducts and voids for prestressed tendons, or embedded portions of light fixtures.

Variation in concrete headwall quantity incurred when an alternate bid for pipe is permitted will not be cause for payment adjustment.

Quantities revised by a change in design, measured as specified, will be increased or decreased and included for payment.

5.2. **Plans Quantity**. Structure elements designated in Table 1 and measured by the cubic yard are plans quantity measurement items. The quantity to be paid for plans quantity items is the quantity shown in the proposal unless modified by Article 9.2., "Plans Quantity Measurement." Additional measurements or calculations will be made if adjustments of quantities are required.

No adjustment will be made for footings or other in-ground elements where the Contractor has been allowed to place concrete in an excavation without forms.

Table 1
Plans Quantity Payment
(Cubic Yard Measurement Only)

Culverts and culvert wing walls	Abutments
Headwalls for pipe	Footings
Retaining walls	Pile bent caps
Inlets and manholes	Post-tensioned elements

Note—Other elements, including pier and bent concrete, may be paid for as "plans quantity" when shown on the plans.

5.3. **Measured in Place**. Items not paid for as "plans quantity" will be measured in place.

6. PAYMENT

The work performed and materials furnished in accordance with this Item and measured as provided under "Measurement" will be paid for at the unit price bid for the class of concrete and element identified and by the special designation when appropriate. This price is full compensation for furnishing, hauling, and mixing concrete materials; furnishing, bending, fabricating, splicing, welding and placing the required reinforcement; clips, blocks, metal spacers, ties, wire, or other materials used for fastening reinforcement in place; furnishing, placing, and stressing post-tensioning system; placing, finishing, and curing concrete; mass placement controls; applying ordinary surface finish; furnishing and placing drains, metal flashing strips, and expansion-joint material; excavation, subgrade preparation; and forms and falsework, equipment, labor, tools, and incidentals.

Price will be adjusted in accordance with Section 421.6., "Measurement and Payment" when required to address non-compliance of project acceptance testing

Design and installation of foundations for falsework is at the Contractor's expense.

In addition to the work described above, for extending structures the unit prices bid for the various classifications of concrete shown are full compensation for removing and disposing of, if necessary, the designated portion of the existing structure; removing, stockpiling if necessary, and replacing headwall units for reuse; cleaning, bending, and cutting of exposed reinforcing steel; splicing of new reinforcing steel to existing reinforcing steel; installation of dowels; and cleaning and preparing existing concrete surfaces.

Item 438
Cleaning and Sealing Joints

1. DESCRIPTION

Clean and seal joints in new or existing rigid concrete pavements and bridge decks. Resize joints in rigid concrete pavements and approach slabs as shown on the plans.

2. MATERIALS

Use sealants of the class specified on the plans that meet the requirements of DMS-6310, "Joint Sealants and Fillers." Use primers recommended by the manufacturer of the sealant if required.

Provide backer rods that are circular and are 25% larger than the joint opening. Use backer rods compatible with the sealant that do not react or bond together.

3. EQUIPMENT

Use equipment that meets sealant manufacturer's recommendations. Use air compressors equipped with appropriate filters for removing oil and water from the air. Provide concrete saws with sufficient capacity to cut full depth of concrete pavement, approach slabs, and pan girder joints.

4. CONSTRUCTION

Submit information from the sealant manufacturer showing recommended equipment and installation procedures before starting work. All equipment and procedures will be subject to approval. If the equipment causes damage to dowels, reinforcing steel, concrete, base, sub-base, or subgrade, repair the damage and change the procedure and equipment to prevent further damage.

4.1. **Preparation**. Remove all debris, dirt, dust, saw-cuttings, and other foreign material from joint by an approved method. Collect and dispose of all the removed material.

Remove existing preformed bituminous fiber board material or other spacer material the full depth of the joint along with all other debris in the joint opening. Resize the joint sealant space by sawing to the width and depth shown on the plans to accommodate the type of sealant specified.

Clean debris from the diaphragm windows below the joints on concrete slab and girder bridges.

Abrasive blast clean the vertical faces of joints armored with steel to remove all visible rust, paint, mill scale, and other forms of contamination, leaving a white metal appearance. Clean concrete and other surfaces by method approved and in accordance with the manufacturer's specifications before placing sealant. Air blast the joint after cleaning to remove all dust.

Saw-cut concrete pavement and concrete approach slab full depth to provide joint opening as shown on the plans and as directed. Clean all debris out of the joint full depth of concrete pavement.

4.2. **Sealing**. Place the sealant in accordance with the manufacturer's recommended procedures. Apply the primer, when required, at the specified rate and time interval before applying the sealant. Apply the sealant to dry joint surfaces unless otherwise recommended by the sealant manufacturer. Tool any sealant material that is not self-leveling to force the sealant against the joint surfaces.

Place approved support spacers into joints as shown on the plans for concrete pavement. Place a backer rod in the joint opening to prevent the sealant from flowing through the joint and to hold the sealant at its required elevation unless directed otherwise. Set the top of the sealant and thickness of sealant as shown on the plans. Do not place sealant in an expansion-type joint if surface temperature is below 55°F or above 90°F.

5. MEASUREMENT

When specified on the plans to be a pay item, this Item will be measured by the foot of sealant placed.

6. PAYMENT

Unless otherwise specified on the plans, the work performed and materials furnished as this Item requires will not be paid for directly but will be subsidiary to bid items of the Contract.

When shown as a pay item, the work performed and materials furnished in accordance with this Item and measured as provided under “Measurement” will be paid for at the unit price bid for “Cleaning and Sealing Existing Joints,” “Cleaning and Sealing Joints” of the class, if specified, and “Cleaning Existing Joints,” and “Resizing and Sealing Joints.” This price is full compensation for furnishing all materials; sawing, routing, and cleaning and installing; disposing of debris; and equipment, labor, tools, and incidentals.

Item 440
Reinforcement for Concrete

1. DESCRIPTION

Furnish and place reinforcement of the type, size, and details shown on the plans.

2. MATERIALS

Use deformed steel bar reinforcement unless otherwise specified or allowed.

2.1. **Approved Mills**. Before furnishing steel, producing mills of reinforcing steel for the Department must be pre-approved in accordance with DMS-7320, "Qualification Procedure for Reinforcing Steel Producing Mills," by the Construction Division. The Department's MPL has a list of approved producing mills. Reinforcing steel obtained from unapproved sources will not be accepted.

Contact the Construction Division with the name and location of the producing mill for stainless reinforcing steel, low carbon/chromium reinforcing steel, or dual-coated reinforcing steel at least 4 weeks before ordering any material.

2.2. **Deformed Steel Bar Reinforcement**. Provide deformed reinforcing steel conforming to one of the following:

- ASTM A615, Grades 60, 75, or 80;
- ASTM A996, Type A, Grade 60;
- ASTM A996, Type R, Grade 60, permitted in concrete pavement only (Furnish ASTM A996, Type R bars as straight bars only and do not bend them. Bend tests are not required.); or
- ASTM A706, Grades 60 or 80.

Provide the grade of reinforcing steel shown on the plans. Provide Grade 60 if no grade is shown.

The nominal size, area, and weight of reinforcing steel bars this Item covers are shown in Table 1.

Table 1
Size, Area, and Weight of Reinforcing Steel Bars

Bar Size Number (in.)	Diameter (in.)	Area (sq. in.)	Weight per Foot (lbs.)
3	0.375	0.11	0.376
4	0.500	0.20	0.668
5	0.625	0.31	1.043
6	0.750	0.44	1.502
7	0.875	0.60	2.044
8	1.000	0.79	2.670
9	1.128	1.00	3.400
10	1.270	1.27	4.303
11	1.410	1.56	5.313
14	1.693	2.25	7.650
18	2.257	4.00	13.60

2.3. **Smooth Steel Bar Reinforcement**. Provide smooth bars for concrete pavement with a yield strength of at least 60 ksi and meeting ASTM A615. Provide steel conforming to ASTM A615 or meet the physical requirements of ASTM A36 for smooth bars that are larger than No. 3. Designate smooth bars by size number up to No. 4 and by diameter in inches above No. 4.

2.4. **Spiral Reinforcement**. Provide bars or wire for spiral reinforcement of the grade and minimum size or gauge shown on the plans.

Provide smooth or deformed wire conforming to ASTM A1064. Provide bars conforming to ASTM A615; ASTM A996, Type A; or ASTM A675, Grade 80, meeting dimensional requirements of ASTM A615.

2.5. **Weldable Reinforcing Steel**. Provide reinforcing steel conforming to ASTM A706 or with a maximum carbon equivalent (C.E.) of 0.55% if welding of reinforcing steel is required or desired. Provide a report showing the percentages of elements necessary to establish C.E. for reinforcing steel that does not meet ASTM A706, in order to be structurally welded. These requirements do not pertain to miscellaneous welds on reinforcing steel as defined in Section 448.4.2.1.1., "Miscellaneous Welding Applications."

Calculate C.E. using the following formula:

$$C.E. = \%C + \frac{\%Mn}{6} + \frac{\%Cu}{40} + \frac{\%Ni}{20} + \frac{\%Cr}{10} - \frac{\%Mo}{50} - \frac{\%V}{10}$$

Do not weld stainless reinforcing steel without permission from the Engineer. Provide stainless reinforcing steel suitable for welding, if required, and submit welding procedures and electrodes to the Engineer for approval.

2.6. **Welded Wire Reinforcement**. Provide welded wire reinforcement (WWR) conforming to ASTM A1064. Observe the relations shown in Table 2 among size number, diameter in inches, and area when ordering wire by size numbers, unless otherwise specified. Precede the size number for deformed wire with "D" and for smooth wire with "W."

Designate WWR as shown in the following example: 6 × 12 – W16 × W8 (indicating 6-in. longitudinal wire spacing and 12-in. transverse wire spacing with smooth No. 16 wire longitudinally and smooth No. 8 wire transversely).

Table 2
Wire Size Number, Diameter, and Area

Size Number (in.)	Diameter (in.)	Area (sq. in.)
31	0.628	0.310
30	0.618	0.300
28	0.597	0.280
26	0.575	0.260
24	0.553	0.240
22	0.529	0.220
20	0.505	0.200
18	0.479	0.180
16	0.451	0.160
14	0.422	0.140
12	0.391	0.120
10	0.357	0.100
8	0.319	0.080
7	0.299	0.070
6	0.276	0.060
5.5	0.265	0.055
5	0.252	0.050
4.5	0.239	0.045
4	0.226	0.040
3.5	0.211	0.035
2.9	0.192	0.035
2.5	0.178	0.025
2	0.160	0.020
1.4	0.134	0.014
1.2	0.124	0.012
0.5	0.080	0.005

Note—Size numbers (in.) are the nominal cross-sectional area of the wire in hundredths of a square inch. Fractional sizes between the sizes listed above are also available and acceptable for use.

2.7. **Epoxy Coating**. Provide epoxy coated reinforcing steel as shown on the plans. Before furnishing epoxy coated reinforcing steel, an epoxy applicator must be pre-approved in accordance with DMS-7330, "Qualification Procedure for Reinforcing Steel Epoxy Coating Applicators." The Department's MPL has a list of approved applicators.

Furnish coated reinforcing steel meeting the requirements in Table 3.

Table 3
Epoxy Coating Requirements for Reinforcing Steel

Material	Specification
Bar	ASTM A775 or A934
Wire or WWR	ASTM A884 Class A or B
Mechanical couplers	As shown on the plans
Hardware	As shown on the plans

Use epoxy coating material and coating repair material that complies with DMS-8130, "Epoxy Powder Coating for Reinforcing Steel." Patch no more than 1/4-in. total length in any foot at the applicator's plant.

Maintain identification of all reinforcing steel throughout the coating and fabrication process and until delivery to the project site.

Furnish 1 copy of a written certification verifying the coated reinforcing steel meets the requirements of this Item and 1 copy of the manufacturer's control tests.

2.8. **Mechanical Couplers**. Use couplers of the type specified in DMS-4510, "Mechanical Couplers for Reinforcing Steel," Article 4510.5.A, "General Requirements" when mechanical splices in reinforcing steel bars are shown on the plans.

Furnish only couplers pre-qualified in accordance with DMS-4510, "Mechanical Couplers for Reinforcing Steel." Ensure sleeve-wedge type couplers are not used on coated reinforcing. Sample and test couplers for use on individual projects in accordance with DMS-4510, "Mechanical Couplers for Reinforcing Steel." Furnish couplers only at locations shown on the plans.

Furnish couplers for stainless reinforcing steel with the same alloy designation as the reinforcing steel.

2.9. **Fibers**. Supply fibers conforming to DMS-4550 "Fibers for Concrete" at the minimum dosage listed in the Department's MPL, when allowed by the plans. Use non-metallic fibers when shown on the plans.

2.10. **Stainless Reinforcing Steel**. Provide deformed steel bars of the types listed in Table 4 and conforming to ASTM A955, Grade 60 or higher when stainless reinforcing steel is required on the plans.

Table 4
Acceptable Types of Deformed Stainless Steel Bar

UNS Designation	S31653	S31803	S24100	S32304
AISI Type	316LN	2205	XM-28	2304

2.11. **Low Carbon/Chromium Reinforcing Steel**. Provide deformed steel bars conforming to ASTM A1035, Grade 100 when low carbon/chromium reinforcing steel is required on the plans.

2.12. **Dual-Coated Reinforcing Steel**. Provide deformed bars conforming to ASTM A1055, Grade 60 or higher when dual-coated reinforcing steel is required on the plans.

2.13. **Glass Fiber Reinforced Polymer Bars (GFRP)**. Provide bars conforming to the AASHTO LRFD *Bridge Design Guide Specifications for GFRP-Reinforced Concrete Bridge Decks and Traffic Railings*, Section 4, "Material Specifications" when GFRP bars are required on the plans. Provide sample certification demonstrating the GFRP bar supplier has produced bar that meets the Material Specifications 2 mo. before fabrication. Furnish certification upon shipment that the GFRP bar supplied meets the Material Specifications.

3. CONSTRUCTION

3.1. **Bending**. Fabricate reinforcing steel bars as prescribed in the CRSI *Manual of Standard Practice* to the shapes and dimensions shown on the plans. Fabricate in the shop if possible. Field-fabricate, if permitted, using a method approved by the Engineer. Replace improperly fabricated, damaged, or broken bars at no additional expense to the Department. Repair damaged or broken bars embedded in a previous concrete placement using a method approved by the Engineer.

Unless otherwise shown on the plans, the inside diameter of bar bends, in terms of the nominal bar diameter (d), must be as shown in Table 5.

Table 5
Minimum Inside Diameter of Bar Bends

Bend	Bar Size Number (in.)	Pin Diameter
Bends of 90° and greater in stirrups, ties, and other secondary bars that enclose another bar in the bend	3, 4, 5	4d
	6, 7, 8	6d
Bends in main bars and in secondary bars not covered above	3 through 8	6d
	9, 10, 11	8d
	14, 18	10d

Bend-test representative specimens as described for smaller bars in the applicable ASTM specification where bending No. 14 or No. 18 Grade 60 bars is required. Make the required 90° bend around a pin with a diameter of 10 times the nominal diameter of the bar.

Bend stainless reinforcing steel in accordance with ASTM A955.

3.2. **Tolerances**. Fabrication tolerances for bars are shown in Figure 1.

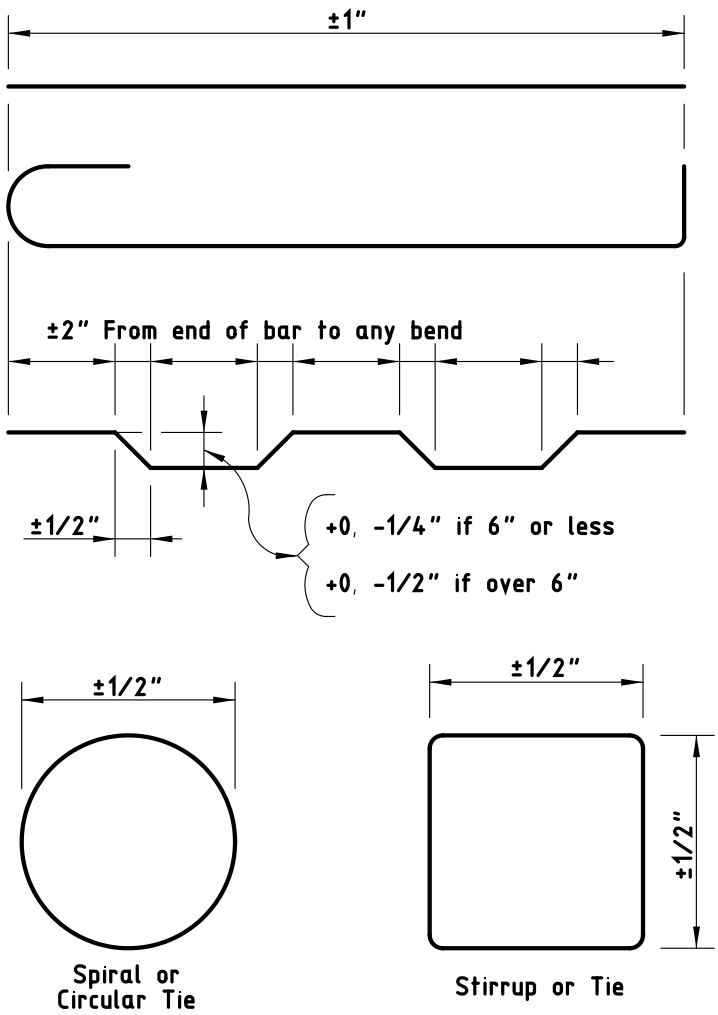

Figure 1
Fabrication Tolerances for Bars

3.3. **Storage**. Store reinforcement above the ground on platforms, skids, or other supports, and protect it from damage and deterioration. Ensure reinforcement is free from dirt, paint, grease, oil, and other foreign materials when it is placed in the work. Use reinforcement free from defects such as cracks and delaminations. Rust, surface seams, surface irregularities, or mill scale will not be cause for rejection if the minimum cross-sectional area of a hand wire-brushed specimen meets the requirements for the size of steel specified.

Do not allow stainless reinforcing steel to be in direct contact with uncoated reinforcing steel, nor with galvanized reinforcing steel. This does not apply to stainless steel wires and ties. Store stainless reinforcing steel separately, off the ground on wooden supports.

3.4. **Splices**. Lap-splice, weld-splice, or mechanically splice bars as shown on the plans. Additional splices not shown on the plans will require approval. Splices not shown on the plans will be permitted in slabs no more than 15 in. in thickness, columns, walls, and parapets.

- Do not splice bars less than 30 ft. in plan length unless otherwise approved. For bars exceeding 30 ft. in plan length, the distance center-to-center of splices must be at least 30 ft. minus 1 splice length, with no more than 1 individual bar length less than 10 ft. Make lap splices not shown on the plans, but otherwise

permitted, in accordance with Table 6. Maintain the specified concrete cover and spacing at splices, and place the lap-spliced bars in contact, securely tied together.

Table 6
Minimum Lap Requirements for Steel Bar Sizes through No. 11

Bar Size Number (in.)	Uncoated Lap Length	Coated Lap Length
3	1 ft. 4 in.	2 ft. 0 in.
4	1 ft. 9 in.	2 ft. 8 in.
5	2 ft. 2 in.	3 ft. 3 in.
6	2 ft. 7 in.	3 ft. 11 in.
7	3 ft. 5 in.	5 ft. 2 in.
8	4 ft. 6 in.	6 ft. 9 in.
9	5 ft. 8 in.	8 ft. 6 in.
10	7 ft. 3 in.	10 ft. 11 in.
11	8 ft. 11 in.	13 ft. 5 in.

- Do not lap No. 14 or No. 18 bars.
- Lap spiral steel at least 1 turn.
- Splice WWR using a lap length that includes the overlap of at least 2 cross wires plus 2 in. on each sheet or roll. Splices using bars that develop equivalent strength and are lapped in accordance with Table 6 are permitted.
- Lap the existing longitudinal bars with the new bars as shown in Table 6 for box culvert extensions with less than 1 ft. of fill. Lap at least 1 ft. 0 in. for extensions with more than 1 ft. of fill.
- Ensure welded splices conform to the requirements of the plans and of Item 448, "Structural Field Welding." Field-prepare ends of reinforcing bars if they will be butt-welded. Delivered bars must be long enough to permit weld preparation.
- Install mechanical coupling devices in accordance with the manufacturer's recommendations at locations shown on the plans. Protect threaded male or female connections, and ensure the threaded connections are clean when making the connection. Do not repair damaged threads.
- Mechanical coupler alternate equivalent strength arrangements, to be accomplished by substituting larger bar sizes or more bars, will be considered if approved in writing before fabrication of the systems.

3.5. **Placing**. Place reinforcement as near as possible to the position shown on the plans. Do not vary bars from plan placement by more than 1/12 of the spacing between bars in the plane of the bar parallel to the nearest surface of concrete. Do not vary bars from plan placement by more than 1/4 in in the plane of the bar perpendicular to the nearest surface of concrete. Provide a minimum 1-in. clear cover of concrete to the nearest surface of bar unless otherwise shown on the plans.

For bridge slabs, the clear cover tolerance for the top mat of reinforcement is −0, +1/2 in.

Locate the reinforcement accurately in the forms, and hold it firmly in place before and during concrete placement by means of bar supports that are adequate in strength and number to prevent displacement and keep the reinforcement at the proper distance from the forms. Provide bar supports in accordance with the CRSI *Manual of Standard Practice*. Use Class 1 supports, approved plastic bar supports, precast mortar, or concrete blocks when supports are in contact with removable or stay-in-place forms. Use Class 3 supports in slab overlays on concrete panels or on existing concrete slabs. Bar supports in contact with soil or subgrade must be approved.

Use Class 1A supports with epoxy coated reinforcing steel. Provide epoxy or plastic coated tie wires and clips for use with epoxy coated reinforcing steel.

Use mortar or concrete with a minimum compressive strength of 5,000 psi for precast bar supports. Provide a suitable tie wire in each block for anchoring to the bar.

Place individual bar supports in rows at 4-ft. maximum spacing in each direction. Place continuous type bar supports at 4-ft. maximum spacing. Use continuous bar supports with permanent metal deck forms.

The exposure of the ends of longitudinals, stirrups, and spacers used to position the reinforcement in concrete pipe and storm drains is not cause for rejection.

Tie reinforcement for bridge slabs and top slabs of direct traffic culverts at all intersections, except tie only alternate intersections where spacing is less than 1 ft. in each direction. Tie the bars at enough intersections to provide a rigid cage of reinforcement for reinforcement cages for other structural members. Fasten mats of WWR securely at the ends and edges.

Clean mortar, mud, dirt, debris, oil, and other foreign material from the reinforcement before concrete placement. Do not place concrete until authorized.

Stop placement until corrective measures are taken if reinforcement is not adequately supported or tied to resist settlement, reinforcement is floating upward, truss bars are overturning, or movement is detected in any direction during concrete placement.

3.6. **Handling, Placing, and Repairing Epoxy Coated Reinforcing Steel**.

3.6.1. **Handling**. Provide systems for handling coated reinforcing steel with padded contact areas. Pad bundling bands or use suitable banding to prevent damage to the coating. Lift bundles of coated reinforcement with a strongback, spreader bar, multiple supports, or a platform bridge. Transport the bundled reinforcement carefully, and store it on protective cribbing. Do not drop or drag the coated reinforcement.

3.6.2. **Placing**. Do not flame-cut coated reinforcement. Saw or shear-cut only when approved. Coat cut ends as specified in Section 440.3.6.3., "Repairing Coating."

Do not weld or mechanically couple coated reinforcing steel except where specifically shown on the plans. Remove the epoxy coating at least 6 in. beyond the weld limits before welding and 2 in. beyond the limits of the coupler before assembly. Clean the steel of oil, grease, moisture, dirt, welding contamination (slag or acid residue), and rust to a near-white finish after welding or coupling. Check the existing epoxy for damage. Remove any damaged or loose epoxy back to sound epoxy coating.

Coat the splice area after cleaning with epoxy repair material to a thickness of 7 to 17 mils after curing. Apply a second application of repair material to the bar and coupler interface to ensure complete sealing of the joint.

3.6.3. **Repairing Coating**. Use material that complies with the requirements of this Item and ASTM D3963 for repairing of the coating. Make repairs in accordance with procedures recommended by the manufacturer of the epoxy coating powder. Apply at least the same coating thickness as required for the original coating for areas to be patched. Repair all visible damage to the coating.

Repair sawed and sheared ends, cuts, breaks, and other damage promptly before additional oxidation occurs. Clean areas to be repaired to ensure they are free from surface contaminants. Make repairs in the shop or field as required.

3.7. **Handling and Placing Stainless Reinforcing Steel**. Handle, cut, and place stainless reinforcing steel bar using tools that are not used on carbon steel. Do not use carbon steel tools, chains, slings, etc. when handling stainless steel. Use only nylon or polypropylene slings. Cut stainless steel reinforcing using shears, saws, abrasive cutoff wheels, or torches. Remove any thermal oxidation using pickling paste. Do not field bend stainless steel reinforcing without approval.

Use 16 gauge fully annealed stainless steel tie wire conforming to the material properties listed in Section 440.2.10., "Stainless Reinforcing Steel." Support all stainless reinforcing steel on solid plastic, stainless steel, or epoxy coated steel chairs. Do not use uncoated carbon steel chairs in contact with stainless reinforcing steel.

3.8. **Bending, Handling, Repairing, and Placing GFRP Bars**. Fabricate, handle, repair, and place GFRP bars in accordance with the AASHTO LRFD Bridge Design Guide Specifications for GFRP-Reinforced Concrete Bridge Decks and Traffic Railings, Section 5, Construction Specifications.

4. MEASUREMENT AND PAYMENT

The work performed, materials furnished, equipment, labor, tools, and incidentals will not be measured or paid for directly but will be considered subsidiary to pertinent Items.

APPENDIX A

STORM WATER POLLUTION PREVENTION PROGRAM

STORM WATER POLLUTION PREVENTION PLAN

PROPOSED 24-INCH WATER LINE ALONG WEST BELLFORT STREET
FROM STELLA LINK ROAD TO BUFFALO SPEEDWAY
CITY OF HOUSTON WBS NO. S-000900-0125-3

TPDES GENERAL PERMIT NO. TX150000
FEBRUARY 2015

Prepared for

Kuo & Associates, Inc.
CONSULTING ENGINEERS - SURVEYORS

KUO & ASSOCIATES, INC.
10700 RICHMOND AVENUE, SUITE 113
HOUSTON, TX 77042

Prepared by

TTL Corp
P.O. Box 1537
Cypress, TX 77410-1537
Tel: 713-501-6993
Fax: 281-213-9535

PROPOSED 24-INCH WATER LINE ALONG WEST BELLFORT STREET FROM STELLA LINK ROAD TO BUFFALO SPEEDWAY

Storm Water Pollution Prevention Plan Engineering Report

City of Houston WBS No. S-000900-0125-3

Prepared for
Kuo & Associates, Inc.

2/9/2015

Prepared by
TTL Corp
(FIRM RN: F-7725)

February 2015

Table of Contents

1. PROJECT DESCRIPTION

1.1. Description of Construction Activities 1

1.2. Sequence of Major Activities 1

1.3. Potential Pollutants 2

1.4. Estimated Total Site Area and Total Disturbed Area 2

1.5. Runoff Coefficient 2

1.6 Site Map 2

1.7 Site Drainage 2

1.8. Soils 3

1.9. Name of Receiving Waters and Extent of Wetlands 3

1.10. Endangered Species 3

1.11. Environmental Site Assessment Phase I 3

2. CONTROLS

2.1. Erosion and Sediment Controls

2.1.1. Stabilization Practices 4
2.1.2. Structural Practices 4
2.1.3. Sequence of Major Erosion and Sediment Control Activities 4

2.2. Storm Water Quality Management 5

2.3. Other Controls

2.3.1. Waste Material Disposal 5
2.3.2. Offsite Vehicle Tracking 5
2.3.3. Street Sweeping and Cleaning 5
2.3.4. Wind Erosion Control 5
2.3.5. Material Stock Piles 6
2.3.6. Demonstration of Compliance with State and Local Regulations 6

3. MAINTENANCE

3.1. Stabilization Practices 7

3.2. Structural Practices 7

4. INSPECTIONS

4.1. Personnel 8

4.2. Revisions to Plan 8

4.3. Inspection Reports 8

5. NON-STORM WATER DISCHARGES

5.1. Inventory for Pollution Prevention Plan 10

5.2. Spill Prevention

5.2.1. Good Housekeeping 10
5.2.2. Hazardous Products 11
5.2.3. Product Specific Practices 11
5.2.4. Spill Prevention Practices 12

6. STANDARD SPECIFICATIONS 13

7. INSPECTION FORMS 14

8. CERTIFICATIONS 15

APPENDICES

1. Location Map and Drainage System Map
2. Inspection Forms
3. Certifications
4. SWPPP Design Set (5 sheets)

1. PROJECT DESCRIPTION

Prior to the start of construction activities, a Small Construction Site Notice must be posted with a copy to be sent to MS 4 – City of Houston. As a requirement of the General Permit, this Storm Water Pollution Prevention Plan (SWPPP) is prepared and shall be implemented throughout the construction.

All contractors and subcontractors shall be notified of the requirement for the SWPPP measures. A list of contractors and subcontractors will be maintained (Appendix 3 Certifications) and included in the SWPPP. If subcontractor(s) change during the project, the list shall be updated accordingly. Duties of the City of Houston and Contractor/Subcontractor(s) include but are not limited to:

- Ensuring full compliance with the SWPPP
- Implementing all elements of the SWPPP, including but not limited to:
    - Prompt and effective erosion and sediment control measures
    - Non-storm water management, and materials and waste management activities such as: monitoring discharges (dewatering, diversion devices); general site clean-up; vehicle and equipment cleaning, fueling and maintenance; spill control; ensuring that no materials other than storm water are discharged.
- Pre-storm inspections
- Storm event inspections
- Post-storm inspections
- Routine inspections as specified
- Immediate repairs to the control measures as needed
- Updates/amendments to the SWPPP, as needed

1.1 Description of Construction Activities

This project proposes approximately 4,586-LF 24-inch water line along Bellfort Street from Stella Link Road to Buffalo Speedway. Details of project scope include:

1. The proposed 24-in water line will be tunneled when crossing Highway 90. The remaining 24-in water lines will be open cut.

2. Associated construction including:
    a. Proposed water line fittings, reducer, air valves and vents, service manholes and fire hydrants.
    b. Existing 8" and 12" waterline reconstruction, and connection to existing 30-in waterline at the project east end.
    c. Roadway pavement (mainly along median) reconstructions. All disturbed areas are curb/gutter boulevard sections with storm sewers.

1.2 Sequences of Major Activities

The Project shall be accomplished in one phase with the following sequence:

1. Establishing the approach traffic signage and delineation devices.
2. Inspect to verify existing grades and flows, and establish SWPPP measures.

3. Excavate pavement to be reconstructed.
4. Open cut trenches for laying the waterlines.
5. Cover the trenches, reconstruct pavement, and stabilize disturbed unpaved areas.
6. Upon inspection and acceptance, removing SWPPP measures.
7. Remove traffic control devices.

1.3 Potential Pollutants

The primary pollutant sources are disturbed soils and subsequent surface water runoff within the project boundary. Other potential pollutant sources include debris from the clearing operations and petroleum products needed for the construction equipments.

1.4 Estimated Total Site Area and Total Disturbed Area

The total site area to be open cut and disturbed, all within the limits of public ROW or easements is approximately 1.49-acre, including 0.55-acre roadway pavement replacements, and 0.94-acre unpaved area. The total disturbed area is same as the site area.

1.5 Runoff Coefficient

The existing runoff coefficient "C" prior to construction is approximately 0.55 for the site area (i.e. disturbed area). The rainfall runoff coefficient "C" following the proposed water line construction will be same since no new pavement will be added, just restoration only. The calculation assumes "C"=0.35 for unpaved area and "C"=0.90 for the pavement areas.

1.6 Site Map

Location and drainage system maps are attached in Appendix I. The site is also identified as 29°40'23.6" N latitude, 95°25'54.2" W longitude.

According to FEMA FIRM Panels 48201C0865L and 48201C0870L, the construction site is inside unshaded Zone X, outside FEMA defined flood hazard areas.

1.7 Site Drainage

Exhibits 1& 2 show that:

1. Bellfort Street from approximate 370-ft west of Highway 90 flows west through 30-in/36-in storm sewers, and ties to Stella Link storm sewer through a 24-in storm sewer at the project west end.

2. Bellfort Street from approximate 370-ft west of Highway 90 to Highway 90 flows east to Highway 90 storm system.

3. Bellfort Street from Highway 90 to west of Buffalo Speedway flows west through 24-in/36-in/42-in/48-in/52-in storm sewers to Highway 90 storm system.

4. The intersection of Bellfort Street and Buffalo Speedway flow east through storm sewers to Kirby Drive storm system.

1.8 Soils

Based on Aviles Engineering Corporation (AEC) October 2014 Geotechnical Investigation (Report G148-14), subsurface soil conditions along the project alignment generally consist of approximately 2 to 4 feet of stiff to very stiff lean/fat clay (CL/CH) fill at the ground surface, underlain by stiff to hard lean/fat clay (CL/CH) to the boring termination depths. The subsurface clayey soils encountered in the borings have none to very high plasticity, with liquid limits (LL) ranging from 26 to 82, and plasticity indices (PI) ranging from 7 to 52.

1.9 Name of Receiving Waters and Extent of Wetlands

Project flow from Bellfort Street west of Highway 90 flows north through Stella Link Road storm sewers into Brays Bayou (HCFCD Unit D100-00-00). Project flow from Bellfort Street east of Highway 90 flows north to HCFCD Unit D135-00-00, which outfalls into the Brays Bayou. The construction area is limited to already developed areas, so there is no known wetland.

1.10 Endangered Species

The construction area is limited to already developed areas, so there are no known threatened or endangered species will be impacted by the construction.

1.11 Environmental Site Assessment (ESA) Phase I

HVJ Associates Inc. October 10 2014 ESA I Report HE1414800 identified seven sites with possible recognized environmental conditions (REC) along project alignment, including:

1. Best Super Drive In Grocery LPST facility at 9954 Stella Link
2. Two former oil well locations near the project alignment east end.
3. Two former oil well locations near the project alignment east end.
4. Former Pilgrim Laundry and Dry Cleaners Express at 10002 Stella Link
5. Former Stella Link Shell Service facility 10100 Stella Link Road.

HVJ recommends further environmental investigations.

2. CONTROLS

2.1 Erosion and Sediment Controls

Erosion control protects or stabilizes the soil surfaces, so as to prevent soil particles from detaching and becoming transported in storm water runoff. Sediment controls are structural measures that are designed to intercept and settle soil particles that have been detached and transported by storm water runoff. Erosion and sediment controls are shown on the Storm Water Pollution Prevention Plan (Appendix 4).

2.1.1 Stabilization Practices

1. Preserve existing vegetations where required and when feasible; and limit construction disturbance area to the minimum.

2. Construction road access, staging and parking areas will be stabilized using coarse aggregate.

3. Texture soil surfaces on new exposed areas to reduce sheet flow and improve water impoundment.

4. Stabilize non-active area immediately upon completion of the project segment. Seeding date and application rates are as defined in Specification Section 02921.

5. Upon completion of construction, apply permanent erosion control to all remaining disturbed soil areas.

2.1.2 Structural Practices

1. Inlet protection barriers or gravel bags will be placed around all inlets that catch flow from the disturbed area. They will be removed after completion of paving construction, and restoration and final stabilization of the construction site.

2. If needed, filter fabric fences or reinforced fabric fences will be installed along downslope side of the area to be disturbed. Reinforced filter fabric fence will be installed around temporary stockpiles.

2.1.3 Sequence of Major Erosion and Sediment Control Activities

1. Stabilized construction accesses, silt fencing, washing area with sediment trap, staging/parking area, temporary stock piles, and inlet barriers along anticipated flow paths from the construction area will be installed prior to any excavation.

2. The contractor shall maintain all erosion and sediment control measures during the construction. All disturbed areas to be exposed will be hydromulch seeded immediately upon construction completion. All excavated unsuitable material shall be hauled off site to an adequate disposal site. When all construction activity is complete and the site is stabilized and inspected, structural controls then can be removed. Any soil disturbed by the removal of the control measures shall be re-seeded.

2.2 Storm Water Quality Management

Existing roadside vegetations will be maintained as much as possible during the construction to provide flow attenuation, vegetative filtration and minimizing erosion.

2.3 Other Controls

2.3.1 Waste Material Disposal

All waste materials will be collected and stored in securely lidded metal dumpsters rented from a licensed solid waste management company. The dumpster will meet all local and state solid waste management regulations. All trash and construction debris from the site will be deposited in the dumpster. The trash and debris will be hauled to an approved landfill. No construction waste material will be buried onsite. All personnel will be instructed regarding the correct procedure for waste disposal. Notices to stating these practices will be posted in the office trailer and the individual, who manages the day-to-day operations, will be responsible for ensuring that these procedures are followed.

No hazardous waste is expected to be generated or encountered in this project. In the event that hazardous waste is encountered, all hazardous waste materials will be disposed of in the manner specified by local or state regulations or by the manufacturer. The individual, who manages the day-to-day operations, will be responsible for seeing that these procedures are followed.

A licensed sanitary waste management contractor will regularly collect all sanitary waste from the portable units if used on-site.

2.3.2 Offsite Vehicle Tracking

Stabilized construction entrances and exits help to reduce vehicle tracking of sediments. The paved streets adjacent to site entrance or exit shall be cleaned daily to remove any excess mud, dirt or rock tracked from the site.

2.3.3 Street Sweeping and Cleaning

Regular scraping and sweeping of streets, driveways and sidewalks must be conducted, so as to reduce sediment tracking from the construction site onto private or public roads.

2.3.4 Wind Erosion Control

Wind erosion or dust control consists of applying water as necessary to prevent or alleviate dust nuisance generated by construction activities. Watering prevents dust only for a short period and should be applied daily (or more often) to be effective.

2.3.5 Material Stock Piles

Earth materials and landscape materials such as sod, rock and mulch shall not be stockpiled, placed or stored on driveways, streets, sidewalks or in runoff flow paths. Cover the stock piles when applicable.

2.3.6 Demonstration of Compliance with State and Local Regulations

The proposed project will be in compliance with applicable state and local waste disposal and sanitary regulations.

3 MAINTENANCE

The Following is a list of erosion and sediment controls to be used in this project.

3.1 Stabilization Practices

1. Stabilization of construction accesses, staging and parking areas.
2. Texture soil surface on exposed areas to reduce direct sheet flow and improve water impoundment.
3. Hydromulch seeding to be provided immediately upon completion of the disturbed areas.

3.2 Structural Practices

1. Inlet protection barriers or gravel bags to be installed at all inlets.
2. If needed, silt fences to be installed at locations shown on the drawings until that area has achieved proper stabilization.

To maintain the above practices, the following will be performed:

1. All control measures shall be maintained in good working order.
2. Maintenance and repairs will be conducted within 24 hours of inspection report.
3. Sediment will be removed from behind the silt fences when reaching about 1/3 the height of the fence, or 6 inches, whichever is less.
4. Silt fence fabric is securely attached to the fence posts, and the fence posts are firmly in the ground.
5. Any sediment around the storm inlets is to be removed immediately.

4. INSPECTIONS

Qualified personnel shall inspect disturbed areas of the construction site which have not been fully stabilized, structural control measures, and locations where vehicles enter or exit the site.
Such inspections shall be conducted prior to, during and after a storm event that causes runoff from the construction site; and at least once every seven (7) calendar days. The results of all inspections and assessments shall be documented in the SWPPP report.

4.1 Personnel

Each contractor will designate a qualified person or persons to perform the following inspections:

1. Disturbed areas and areas used for storage of materials that are exposed to precipitation will be inspected for evidence of, or the potential for pollutants entering the drainage system.

2. Erosion and sediment control measures identified in the plan will be observed to ensure that they are operating correctly.

3. Where discharge locations or points are accessible, they will be inspected to ascertain whether erosion control measures are effective in preventing significant impacts to receiving streams.

4. Locations where vehicles enter or exit the site will be inspected for evidence of offsite sediment tracking.

5. Hydromulch seeding and planting will be inspected for bare spots, washouts, or healthy growth.

The inspection will be conducted by the responsible person at least once every 7-calendar day and within 24 hours after a storm of 0.5 inch or greater. Contractor shall provide, at his expense, a rain tube or other suitable device to measure rainfall. Contractor shall also provide an emergency contact that is available during non-business hours.

4.2 Revisions to Plan

Based on results of the inspections, whenever there is a change in construction or operations which may affect the discharge of pollutants to surface waters or storm sewer systems, the site control and maintenance measures (Sections 2 & 3) and the Storm Water Pollution Prevention Plan (SWPPP) shall be revised as appropriate, no later than 7 calendar days following the inspections.

4.3 Inspection Reports

A report summarizing the scope of the inspection, name(s) and qualifications of the personnel making the inspection, the date(s) of the inspection, major observations relating to implementation of Storm Water Pollution Prevention Plan, and actions taken shall be made and retained as part of

the Storm Water Pollution Prevention Plan for the last three (3) years from the date that the site is finally stabilized. The report shall be signed in accordance with Part VI.G of the General Permit.

Copies of the forms to be used for the inspection and maintenance report are included in Appendix 2 as part of this SWPPP. Inspection and maintenance reports include:

1. Stabilization Measures
2. Filter Fabric Fence
3. Inlet Protection Barriers
4. Reinforced Filter Fabric Barrier
5. Stabilized Construction Access/Staging Area
6. Changes Required to the Storm Water Pollution Prevention Plan

5 NON-STORM WATER DISCHARGES

5.1 Inventory for Pollution Prevention Plan

The substances listed below are expected to be present onsite during construction:

- Aggregate
- Concrete
- Asphalt
- Detergents
- Paints
- Fertilizer
- Petroleum Products including Fuels
- Cleaning Solvents
- Lubricants
- Wood
- Steel Products

Authorized non-storm water discharges anticipated during the project:

1. Water from waterline flushing
2. Water for vehicle or equipment washing or dust control
3. Irrigation drainage from watering vegetation
4. Pavement wash water (not from toxic or hazardous material spill areas)
5. Uncontaminated groundwater from excavations

These effluents are to be controlled as required to minimize creation of sediment discharge.

5.2 Spill prevention

The following are the material management practices that will be used to reduce the risk of spills or other accidental exposure of materials and substances to storm water runoff. Contractor is responsible for cleaning up any spill.

5.2.1 Good Housekeeping

The following good housekeeping practices will be followed onsite during the construction project:

1. An effort will be made to store only enough products required to do the job.

2. All materials stored onsite will be stored in a neat, orderly manner in their appropriate containers and, if possible, under a roof or other enclosure.

3. Products will be kept in their original containers with the original manufacturer's label.

4. Substances will not be mixed with one another unless recommended by the manufacturer.

5. Whenever possible, all of a product will be used up before disposing of the container.

6. Manufacturer's recommendations for proper use and disposal will be followed.

7. Designated areas for equipment maintenance and repair (control of oil, grease, and fuel spills).

8. Waste receptacles with regular collection for liter and construction debris.

9. Equipment wash-down areas onsite with appropriate control of wash waters (including concrete truck wash down).

10. Proper storage areas for chemicals, paints, solvents, fertilizers, and other potentially toxic materials.

11. Adequately maintained sanitary facilities.

12. Properly control of raw materials stored onsite (for example, sand, aggregate and cement used in the manufacturing of concrete or stockpile of topsoils).

13. Street sweeping or cleaning.

The site superintendent will inspect daily to ensure proper use and disposal of materials onsite.

5.2.2 Hazardous Products

These practices will be followed to reduce the risks associated with hazardous materials, if hazardous materials are used.

1. Products will be kept in original containers unless they are not resealable.

2. Original labels and materials safety data will be retained.

3. If surplus product must be disposed of, manufacturers or local and state recommended methods of proper disposal will be followed.

5.2.3 Product Specific Practices

The following practices will be followed:

1. Petroleum Products: All on-site vehicles will be monitored for leaks and receive regular preventative maintenance to reduce the chance of leakage. Petroleum products will be stored in tightly sealed containers that are clearly labeled. Any asphalt substances used onsite will be applied according to manufacturer's recommendations.

2. Fertilizers: Fertilizers used will be applied only in minimum amounts recommended by the manufacturer. Once applied, fertilizer will be worked in the soil to limit exposure to storm water. Storage will be in a covered shed. The contents of any partially used bags of fertilizer will be transferred to sealable plastic bag to avoid spills.

3. Paints: All containers will be tightly sealed and stored when not required for use. Excess paint will not be discharged to the storm sewer system but will be properly disposed of according to manufacturer's recommendations.

4. Concrete trucks: Concrete trucks will not be allowed to wash out or discharge surplus concrete or drum wash water at this project site.

5.2.4 Spill Prevention Practices

In addition to the good housekeeping and material management practices discussed in the previous sections of this plan, the following practices will be followed for spill prevention and cleanup:

1. Manufacturer's recommended methods for spill cleanup and will be clearly posted and sited personnel will be made aware of the procedures and the location of the information and cleanup supplies.

2. Materials and equipment necessary for spill cleanup will be kept in the material storage area on-site. Equipment and materials will include but not limited to brooms, dustpans, mops, rags, gloves, goggles, kitty litter, sand, sawdust, and plastic and metal trash container specifically for this purpose.

3. All spills must be cleaned up immediately after discovery.

4. The spill area will be kept well ventilated and personnel will wear appropriate protective clothing to prevent injury from contact with a hazardous substance.

5. Spills of toxic or hazardous materials will be reported to the appropriate state or local government agency, regardless of the size.

6. The spill prevention plan will be adjusted to include measures to prevent this type of spill from recurring and how to clean up the spill if there is another one. A description of the spill, what caused it, and cleanup measures will also be included.

7. The site superintendent responsible for the day-to-day operations will be the spill prevention and cleanup coordinator. He will designate at least three other site personnel who will receive spill prevention and cleanup training. These individuals will each become responsible for a particular phase of prevention and cleanup. The names of responsible spill personnel will be posted in the material storage area and in the office trailer onsite.

6 STANDARD SPECIFICATIONS

The SWPPP ensures the project complies with the requirements for General Permits for storm water discharges associated with construction activity under the National Pollution Discharge Elimination System (NPDES), or Texas Pollutant Discharge Elimination System (TPDES) after July 8, 2003. The latest Storm Water Discharges from Construction Activities - TXR150000 is dated February 15, 2008. The technical specifications cover the installation of erosion and sedimentation controls during construction is listed below.

Item	Title	Release Date
01410	TPDES requirements (with Attachments)	February 1, 2011
01570	Storm Water Pollution Prevention Control	January 28, 2012
01575	Stabilized Construction Exit	February 1, 2011
01576	Waste Material Disposal	August 1, 2003
02921	Hydro Mulch Seeding	January 1, 2011

7 INSPECTION FORMS

See Appendix 2.

8 CERTIFICATIONS

See Appendix 3 for the following certifications:

1. Contractor/Subcontractor Certification
2. TPDES Operator Information
3. City of Houston Site Inspection Form
4. EPA Site Inspection Form
5. Notice to Be Posted

Appendix 1

Location Map and Drainage Map

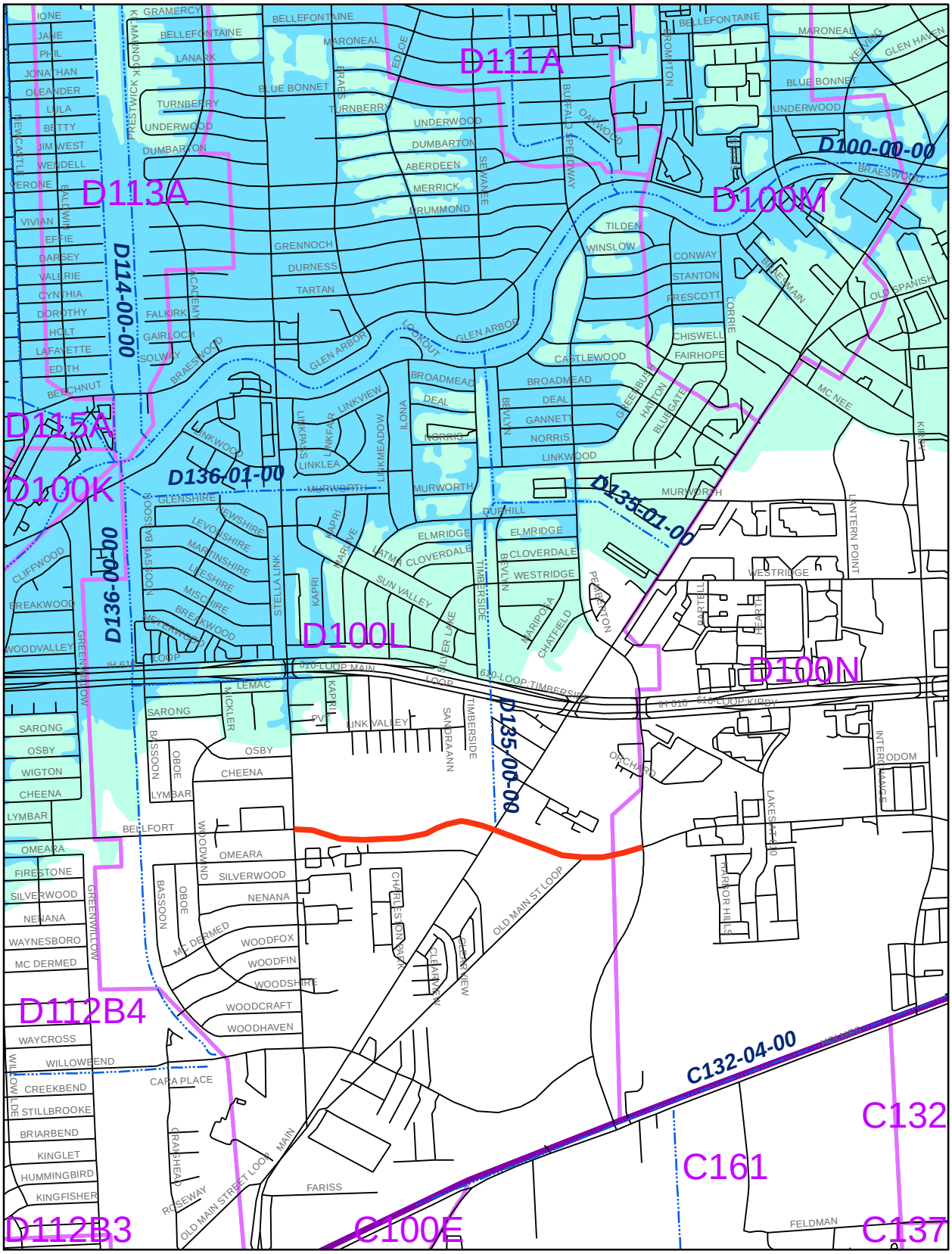

Proposed 24-Inch Water Line along West Bellfort Street
-Stella Link Road to Buffalo Speedway

EXHIBIT 1. LOCATION MAP

ROCHDALE
SUN VALLEY
WESTRIDGE
WOODMEADOW
SILVER LAKE
LINKMEADOW
HOOKTOWN
HONA
TIMBERSIDE
BEVILLE
MANITOBA
CLAIRFIELD
PEMBERTON
LOOP
LOOP 610
TIMBERSIDE
BELLFORT
OLD MAIN ST LOOP
GLENCOVE
CLEARVIEW
WILLOWBEND
GMEARS
MONTANA
WOODFOX
ELIZABETH
OAK VALLEY
BETANY
ROSE VALLEY
ROSE VALLEY
ROSE VALLE

Appendix 2

Inspection Forms

PROPOSED 24-INCH WATER LINE ALONG WEST BELLFORT STREET
FROM STELLA LINK ROAD TO BUFFALO SPEEDWAY

INSPECTION AND MAINTENANCE REPORT

INSPECTOR: _____ DATE: _____

DAYS SINCE LAST RAINFALL: _____ AMOUNT OF LAST RAINFALL: _____ INCHES

STABILIZATION MEASURES

FROM	DATE SINCE LAST DISTURBED	DATE OF NEXT DISTURBANCE	STABILIZED?	STABILIZED WITH	CONDITION
_____	_____	_____	_____	_____	_____
_____	_____	_____	_____	_____	_____
_____	_____	_____	_____	_____	_____
_____	_____	_____	_____	_____	_____
_____	_____	_____	_____	_____	_____
_____	_____	_____	_____	_____	_____
_____	_____	_____	_____	_____	_____

STABILIZATION REQUIRED:
_____
_____
_____

TO BE PERFORMED BY: _____ ON OR BEFORE: _____

PROPOSED 24-INCH WATER LINE ALONG WEST BELLFORT STREET
FROM STELLA LINK ROAD TO BUFFALO SPEEDWAY

INSPECTION AND MAINTENANCE REPORT

STRUCTURAL CONTROLS

FILTER FABRIC FENCE

LOCATION	BOTTOM OF FABRIC STILL BURIED	FABRIC TORN OR SAGGING?	POSTS TIPPING OVER?	HOW DEEP IS THE SEDIMENT?
_____	_____	_____	_____	_____
_____	_____	_____	_____	_____
_____	_____	_____	_____	_____
_____	_____	_____	_____	_____
_____	_____	_____	_____	_____
_____	_____	_____	_____	_____

MAINTENANCE REQUIRED FOR SILT FENCE:

_____
_____
_____

TO BE PERFORMED BY: _____ ON OR BEFORE: _____

PROPOSED 24-INCH WATER LINE ALONG WEST BELLFORT STREET
FROM STELLA LINK ROAD TO BUFFALO SPEEDWAY

INSPECTION AND MAINTENANCE REPORT

STRUCTURAL CONTROLS

INLET PROTECTION BARRIERS

LOCATION	IN PLACE?/ CONDITION?	DEPTH OF SEDIMENT	CONDITION OF INLET
_____	_____	_____	_____
_____	_____	_____	_____
_____	_____	_____	_____
_____	_____	_____	_____
_____	_____	_____	_____
_____	_____	_____	_____
_____	_____	_____	_____

MAINTENANCE REQUIRED FOR INLET PROTECTION BARRIER:

_____
_____
_____

TO BE PERFORMED BY: _____ ON OR BEFORE: _____

PROPOSED 24-INCH WATER LINE ALONG WEST BELLFORT STREET
FROM STELLA LINK ROAD TO BUFFALO SPEEDWAY

INSPECTION AND MAINTENANCE REPORT

STRUCTURAL CONTROLS

REINFORCED FILTER FABRIC BARRIER

LOCATION	BOTTOM OF FABRIC STILL BURIED	FABRIC TORN OR SAGGING?	POSTS TIPPING OVER?	HOW DEEP IS THE SEDIMENT?
_____	_____	_____	_____	_____
_____	_____	_____	_____	_____
_____	_____	_____	_____	_____
_____	_____	_____	_____	_____
_____	_____	_____	_____	_____
_____	_____	_____	_____	_____

MAINTENANCE REQUIRED FOR REINFORCED FILTER FABRIC BARRIER:

_____
_____
_____

TO BE PERFORMED BY: _____ ON OR BEFORE: _____

PROPOSED 24-INCH WATER LINE ALONG WEST BELLFORT STREET
FROM STELLA LINK ROAD TO BUFFALO SPEEDWAY

INSPECTION AND MAINTENANCE REPORT

OTHER CONTROLS

STABILIZED CONSTRUCTION ENTRANCE/ STAGING AREA

DOES MUCH SEDIMENT GET TRACKED ONTO ROAD?	ENTRY SURFACE CLEAN OR SEDIMENT FILLED?	DOES ALL TRAFFIC USE ENTRANCE?
_____	_____	_____
_____	_____	_____
_____	_____	_____
_____	_____	_____
_____	_____	_____

MAINTENANCE REQUIRED FOR STABILIZED CONSTRUCTION ENTRANCE/ STAGING AREA:

_____
_____
_____

TO BE PERFORMED BY: _____ ON OR BEFORE: _____

PROPOSED 24-INCH WATER LINE ALONG WEST BELLFORT STREET
FROM STELLA LINK ROAD TO BUFFALO SPEEDWAY

INSPECTION AND MAINTENANCE REPORT

CHANGES REQUIRED TO THE STORM WATER POLLUTION PREVENTION PLAN

_____
_____
_____

REASONS FOR CHANGES:

_____
_____
_____

PREPARED BY: _____

INSPECTOR'S SIGNATURE: _____ DATE: _____

Appendix 3

Certifications

ATTACHMENT 4

CONTRACTOR'S / SUBCONTRACTOR'S

CERTIFICATION FOR TPDES PERMITTING

I certify under penalty of law that I understand the terms and conditions of TPDES General Permit No. TXR150000 and the Storm Water Pollution Prevention Plan for the construction site identified as part of this certification.

Signature: _____

Name: (printed or typed) _____

Title: _____

Company: _____

Address: _____

Date: _____

Signature: _____

Name: (printed or typed) _____

Title: _____

Company: _____

Address: _____

Date: _____

Signature: _____

Name: (printed or typed) _____

Title: _____

Company: _____

Address: _____

Date: _____

ATTACHMENT 3

TPDES OPERATOR'S INFORMATION

Owner's Name and Address: City of Houston

Mr. _____
(City Official)

_____
(Department)
P. O. Box 1562
Houston, Texas 77251-1562
(713) 247-1000

Contractors' Names and Addresses:

General Contractor: _____
_____
_____
_____
Telephone: _____

Site Superintendent: _____
_____
_____
_____
Telephone: _____

Erosion Control and Maintenance Inspection: _____
_____
_____
_____
Telephone: _____

Subcontractors' Names and Addresses:

_____ _____
_____ _____
_____ _____
_____ _____
Phone: _____ Phone: _____

Note: Insert name, address, and telephone number of person or firms

ATTACHMENT 6

City of Houston

Storm Water Pollution Prevention Plan
Construction Site Inspection Report

TPDES/EPA Permit Number _____

COH Storm Water Quality Permit Number _____

DATE _____

No exceptions noted.

The following must be corrected prior to continuing work:

Public Notice improperly posted

Initial Construction Site Inspection Report information requires updating

Copy of NOI not on site

Storm water pollution prevention plan not on site

Erosion and sediment controls improperly installed

Erosion and sediment control devices improperly maintained

Fueling or washout areas not properly protected

Portocan or other sanitary facilities not properly protected

Self-inspection and maintenance records incomplete

Sediment from site outside area of construction

Other (see description below)

_____

_____

Please contact the Storm Water Quality Engineer at
611 Walker, RA-257, Houston TX 77002
713-837-7383 fax 713-837-0570

Once the above items have been corrected, call to arrange for reinspection. No further inspections for any construction related activity shall be made until the above items have been corrected.

Inspector's Signature	Contractor's Signature
Inspector's Name	Contractor's Name

not present

Distribution Stormwater Quality Engineer, Code Enforcement, Inspector, Operator
(Operator is Contractor)

Form _____ (10-01-01)

EPA NPDES Construction Inspection Form

The following inspection is being performed in compliance with Part IV.D.4. of the NPDES Region 6 Storm Water Construction General Permit [63 Fed. Reg. 36502] and being retained in accordance with Part V of the Permit. Qualified personnel (provided by the permittee or cooperatively by multiple permittees) shall inspect disturbed areas of the construction site that have not been finally stabilized, areas used for storage of materials that are exposed to precipitation, placement and effectiveness of structural control measures, and locations where vehicles enter or exit the site. Inspections shall be performed at least once every 14 days and within 24 hours of the end of a storm event of 0.5 inches or greater. Where sites have been temporarily stabilized, runoff is unlikely due to winter conditions, or during seasonal arid periods in arid areas (0-10 inches of rainfall annually) and semi-arid areas (10-20 inches annually) such inspections shall be conducted at least once every month. This form is primarily intended for use with construction projects in Texas and New Mexico. Permittees on Indian Country lands in Oklahoma, Louisiana and Arkansas and some oil and gas facilities in Oklahoma may use this form if they are eligible for this permit. Other facilities need to check with their NPDES authority before using this form.

If you do not know your NPDES Permit Number, contact the NOI Processing Center at (301)495-4145. This form was prepared as an example and it is not a required form for use with the permit. Alternative forms may be used if they contain all of the required information as set forth in the permit. This form and additional information regarding the NPDES Region 6 storm water program may be found on the Internet at http://www.epa.gov/region6/sw/. Any person with a complaint about the operation of this facility in regards to this permit should contact EPA Region 6 at (214)665-7112.

Permit Number(s) covered by this inspection (e.g. owners, developers, general contractor, builders)	
Signature and Certification in accordance with Part VI.G of the permit:	I certify under penalty of law that this document and all attachments were prepared under my direction or supervision in accordance with a system designed to assure that qualified personnel properly gathered and evaluated the information submitted. Based on my inquiry of the person or persons who manage the system, or those persons directly responsible for gathering the information, the information submitted is, to the best of my knowledge and belief, true, accurate, and complete. I am aware that there are significant penalties for submitting false information, including the possibility of fine and imprisonment for knowing violations. Signature_____Date_____
Date of Inspection	
Inspector Name	
Is there a copy of the permit language with the SWPPP?	” YES ” NO
Is the inspector qualified and are the qualifications documented in the SWPPP?	” YES ” NO
Is an NPDES storm water construction sign posted at the entrance for all permittees?	” YES ” NO

You may want to use EPA Region 6 construction checklist to assure components of the SWPPP are complete. This form, the construction sign, and the checklist are available on the Region 6 NPDES Storm Water Forms and Documents web page which may be found on the internet at http://www.epa.gov/earth1r6/6en/w/formsw.htm In addition to the checklist, you should provide a narrative (see next page) on the existing Best Management Practices and Structural Controls found during each inspection. Any problems identified in an inspection should be corrected within 7 days. The inspection should cover all components of the SWPPP and all potential pollutants. While eroded soil is the primary pollutant of concern, do not forget to inspect for other pollutant sources such as fuel tanks, paints, solvents, stabilization materials, concrete hardner, batch plants, and construction debris. The inspector will need to update the SWPPP to reflect findings of the inspection. The site map should be updated after an inspection to show controls that have been added or removed, to ensure the site map is kept current in accordance with Part IV.C. of the permit.

Narrative Findings of the inspection:

Observations should include any findings of Best Management Practices or controls that are not in accordance with the SWPPP. If a control is not in place or failed, observe the reason why. A control removed temporarily for work is not necessarily a violation if properly recorded in the SWPPP. If it has been removed, record why it was removed and, if applicable, when it will be reinstalled. If the control has failed, observe the conditions so a conclusion may be made as to wether the control failed for improper maintenance or improper design. The qualified inspector will know when a failed control is inadequate and should be replaced by an improved control mechanism. Qualified inspectors are to have authority to make changes to the SWPPP to assure compliance. Controls that have not been installed should be given a reason why they are not installed and/or a scheduled date for installation if they are designed for a later phase of construction. After the inspection, the SWPPP and its site map should be updated to reflect current conditions of controls and Best Management Practices at the time of the inspection. This includes removing uninstalled controls from the site map or otherwise denoting on the site map if they are no longer installed if the controls have been removed because they are no longer necessary (e.g. stabilization has been achieved in that area).

SMALL CONSTRUCTION SITE NOTICE

FOR THE
Texas Commission on Environmental Quality (TCEQ)
Storm Water Program

TPDES GENERAL PERMIT TXR150000

The following information is posted in compliance with **Part II.E.2.** of the TCEQ General Permit Number TXR150000 for discharges of storm water runoff from small construction sites. Additional information regarding the TCEQ storm water permit program may be found on the internet at:

http://www.tceq.state.tx.us/nav/permits/wq_construction.html

Operator Name:	
Contact Name and Phone Number:	
Project Description: *Physical address or description of the site's location, estimated start date and projected end date, or date that disturbed soils will be stabilized*	
Location of Storm Water Pollution Prevention Plan:	

For Small Construction Activities Authorized Under Part II.E.2. (Obtaining Authorization to Discharge) the following certification must be completed:

I _____ (Typed or Printed Name Person Completing This Certification) certify under penalty of law that I have read and understand the eligibility requirements for claiming an authorization under Part II.E.2. of TPDES General Permit TXR150000 and agree to comply with the terms of this permit. A storm water pollution prevention plan has been developed and will be implemented prior to construction, according to permit requirements. A copy of this signed notice is supplied to the operator of the MS4 if discharges enter an MS4. I am aware there are significant penalties for providing false information or for conducting unauthorized discharges, including the possibility of fine and imprisonment for knowing violations.

Signature and Title_____ Date _____

_____*Date Notice Removed*
____*MS4 operator notified per Part II.F.3.*

Appendix 4

SWPPP Design Sheets (5)

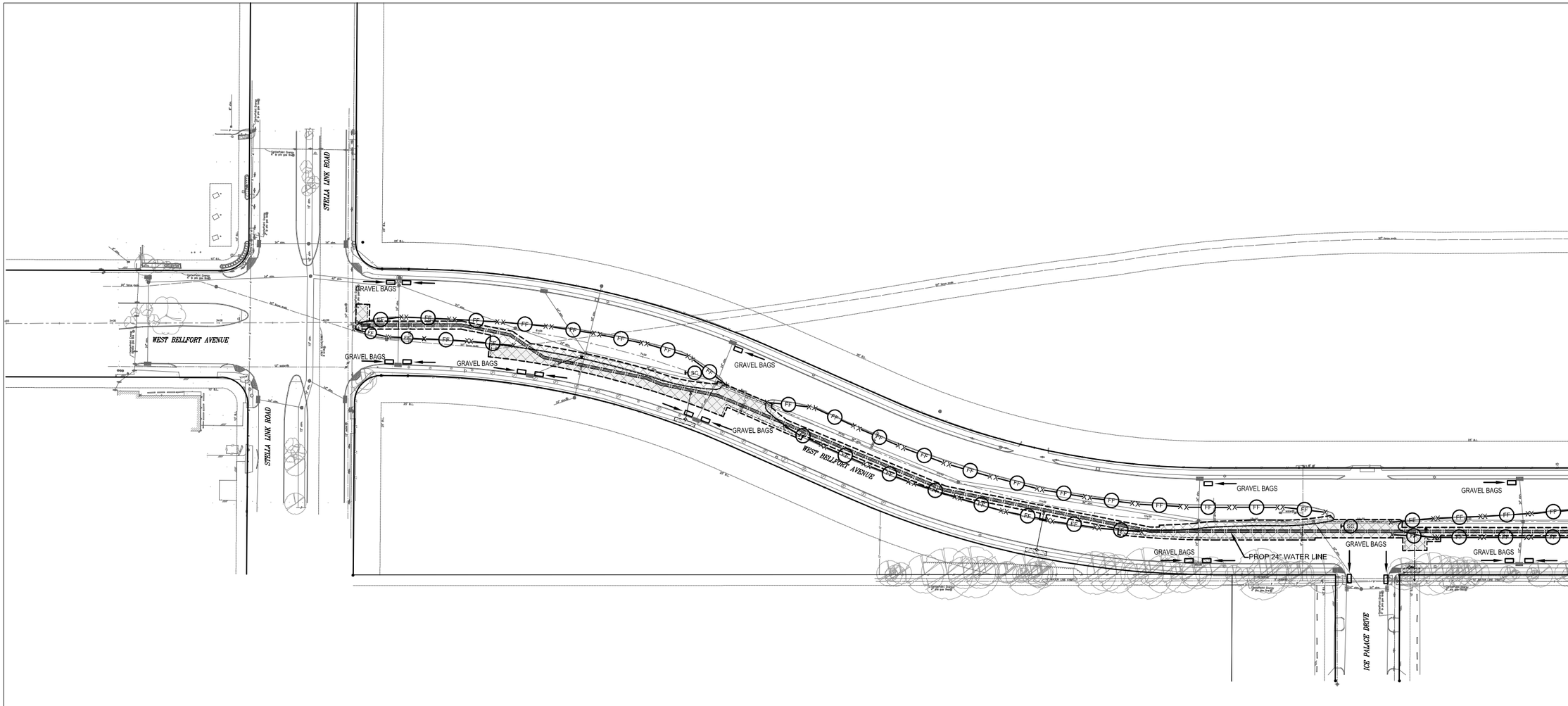

No.	Date	Revisions	App.

Surface Water Transmission Program

KUO & associates, Inc.
Consulting Engineers & Surveyors
10700 Richmond Ave., Ste 113, Houston, Texas 77042
Tel: 713-975-5169, Fax: 713-975-0500
www.kuoassociates.com
TBPE Firm Registration No. F-4578
TBPLS Firm Registration No. 10075600

TTL CORP
P.O. BOX 1537, CYPRESS, TX 77410-1537
TEL: 713-501-6993 FAX: 281-213-9535
(TBPE AN: F-7725)

SURVEYED BY:
KUO & ASSOCIATES, Inc.
C.O.H. Field Book P-5896

CITY OF HOUSTON
DEPARTMENT OF PUBLIC WORKS AND ENGINEERING

24" WATER LINE ON W BELLFORT FROM STELLA LINK TO BUFFALO SPEEDWAY

STORM WATER POLLUTION PREVENTION PLAN

SHEET 1 OF 4

WBS NO.
S-000900-0125-4

DRAWING SCALE
1"=100'

CITY OF HOUSTON PM
ARTHUR MORRIS, P.E.

SHEET NO. 1 OF 5

PROP LEGEND

- IPB — INLET PROTECTION BARRIER
- DSB — DEWATERING SETTLING BASIN
- X—FF—X FILTER FABRIC FENCE
- X—RFB—X REINFORCED FILTER FABRIC BARRIER
- SURFACE FLOW DIRECTION
- DISTURBED AREA
- SC — STABILIZED CONSTRUCTION ENTRANCE/EXIT
- INLET PROTECTION - GRAVEL BAGS
- PAVEMENT REPLACEMENT AREA

NOTES:

1. CONTRACTOR SHALL PROVIDE STABILIZED CONSTRUCTION ACCESSES AT BOTH ENDS OF EACH CONSTRUCTION SEGMENT.
2. CONTRACTOR SHALL PROVIDE STABILIZED STAGING/PARKING AREA.
3. MAINTENANCE AND INSPECTION OF EROSION/SEDIMENT CONTROL DEVICES SHALL BE PROVIDED PER SWPPP REPORT.
4. INLET PROTECTION BARRIER SHALL NOT IMPEDE TRAFFIC FLOW.

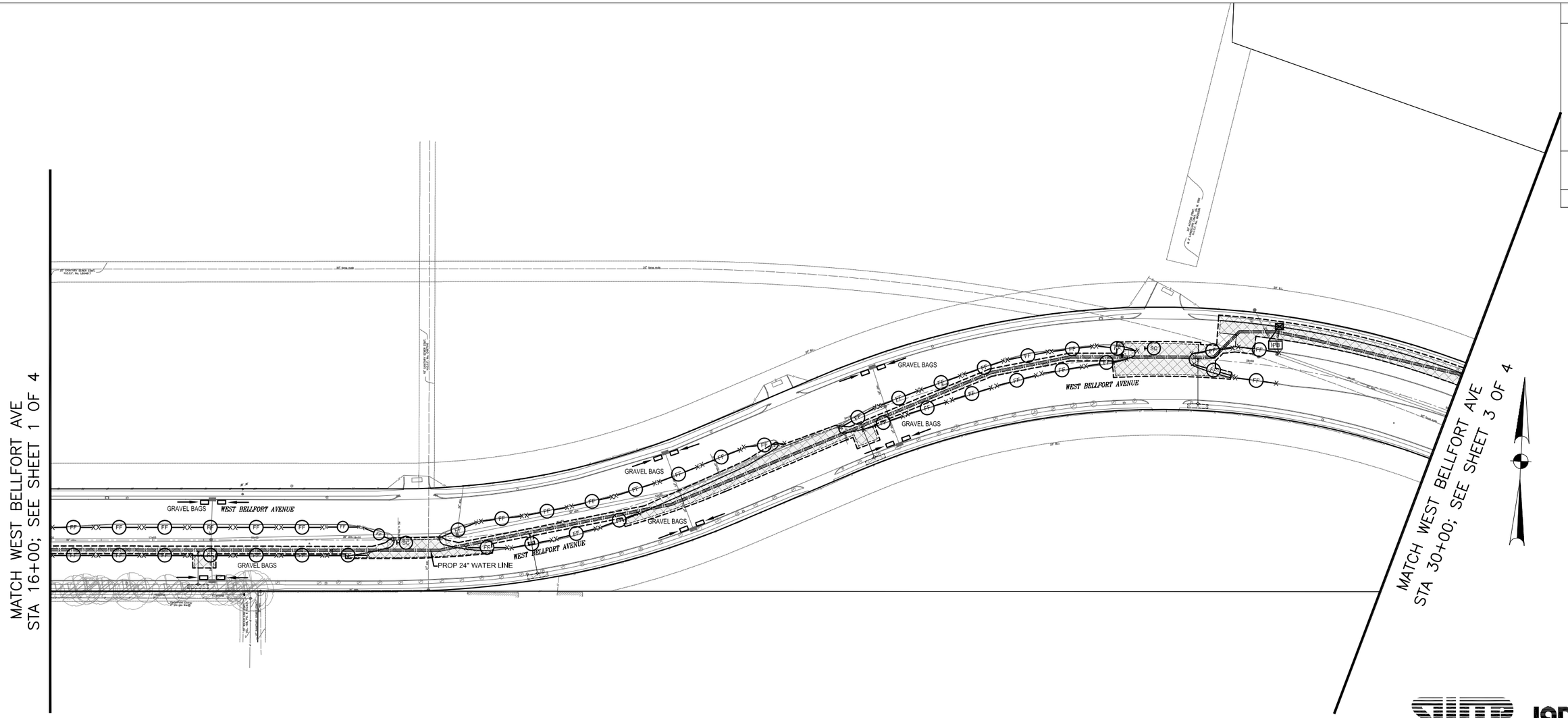

No.	Date	Revisions	App.

PROP LEGEND

- IPB — INLET PROTECTION BARRIER
- DSB — DEWATERING SETTLING BASIN
- FF — FILTER FABRIC FENCE
- RFB — REINFORCED FILTER FABRIC BARRIER
- SURFACE FLOW DIRECTION
- DISTURBED AREA
- SC — STABILIZED CONSTRUCTION ENTRANCE/EXIT
- INLET PROTECTION - GRAVEL BAGS
- PAVEMENT REPLACEMENT AREA

NOTES:

1. CONTRACTOR SHALL PROVIDE STABILIZED CONSTRUCTION ACCESSES AT BOTH ENDS OF EACH CONSTRUCTION SEGMENT.
2. CONTRACTOR SHALL PROVIDE STABILIZED STAGING/PARKING AREA.
3. MAINTENANCE AND INSPECTION OF EROSION/SEDIMENT CONTROL DEVICES SHALL BE PROVIDED PER SWPPP REPORT.
4. INLET PROTECTION BARRIER SHALL NOT IMPEDE TRAFFIC FLOW.

SWTP Surface Water Transmission Program

LAN

KUO & associates, Inc.
Consulting Engineers & Surveyors
10700 Richmond Ave., Ste 113, Houston, Texas 77042
Tel: 713-975-8169, Fax: 713-975-0302
www.kuoassociates.com
TBPE Firm Registration No. F-4578
TBPLS Firm Registration No. 10076600

TTL CORP
P.O. BOX 1537, CYPRESS, TX 77410-1537
TEL: 713-501-6993 FAX: 281-213-9535
(TBPE RN- F-7725)

SURVEYED BY:
KUO & ASSOCIATES, Inc.
C.O.H. Field Book P-5896

CITY OF HOUSTON
DEPARTMENT OF PUBLIC WORKS AND ENGINEERING

24" WATER LINE ON W BELLFORT FROM STELLA LINK TO BUFFALO SPEEDWAY

STORM WATER POLLUTION PREVENTION PLAN

SHEET 2 OF 4

WBS NO. S-000900-0125-4	
DRAWING SCALE	
1"=100'	
CITY OF HOUSTON PM	
ARTHUR MORRIS, P.E.	
SHEET NO. 2 OF 5	

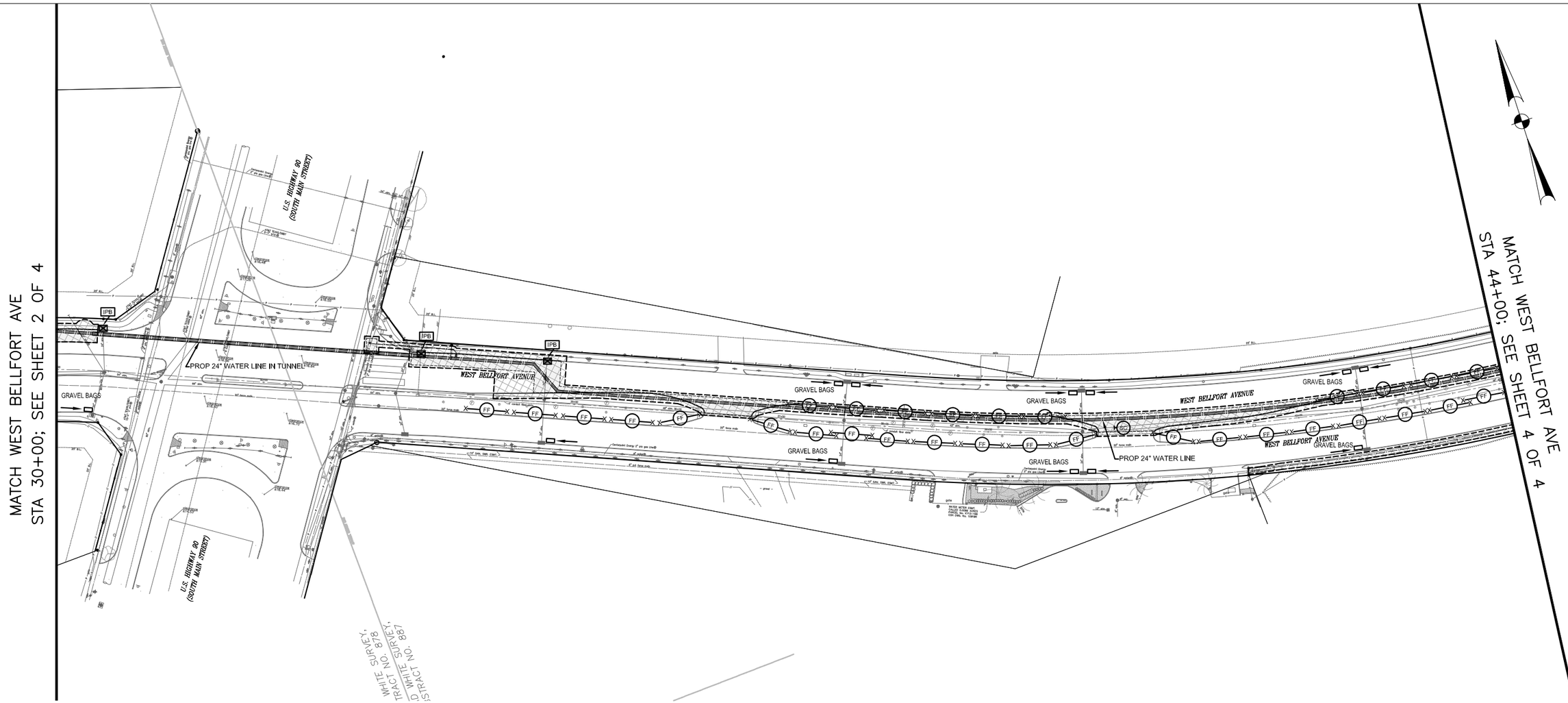

PROP LEGEND

- IPB — INLET PROTECTION BARRIER
- DSB — DEWATERING SETTLING BASIN
- FF — FILTER FABRIC FENCE
- RFB — REINFORCED FILTER FABRIC BARRIER
- SURFACE FLOW DIRECTION
- DISTURBED AREA
- SC — STABILIZED CONSTRUCTION ENTRANCE/EXIT
- INLET PROTECTION - GRAVEL BAGS
- PAVEMENT REPLACEMENT AREA

NOTES:

1. CONTRACTOR SHALL PROVIDE STABILIZED CONSTRUCTION ACCESSES AT BOTH ENDS OF EACH CONSTRUCTION SEGMENT.
2. CONTRACTOR SHALL PROVIDE STABILIZED STAGING/PARKING AREA.
3. MAINTENANCE AND INSPECTION OF EROSION/SEDIMENT CONTROL DEVICES SHALL BE PROVIDED PER SWPPP REPORT.
4. INLET PROTECTION BARRIER SHALL NOT IMPEDE TRAFFIC FLOW.

No.	Date	Revisions	App.

SWTP
Surface Water Transmission Program

KUO & associates, Inc.
Consulting Engineers & Surveyors
10700 Richmond Ave., Ste 113, Houston, Texas 77042
Tel: 713-975-5169, Fax: 713-975-0500
www.kuoassociates.com
TBPE Firm Registration No. F-4578
TBPLS Firm Registration No. 10075600

TTL CORP
P.O. BOX 1537, CYPRESS, TX 77410-1537
TEL: 713-501-6993 FAX: 281-213-9535
(TBPE FIN- F-7725)

SURVEYED BY:
KUO & ASSOCIATES, Inc.
C.O.H. Field Book P-5896

CITY OF HOUSTON
DEPARTMENT OF PUBLIC WORKS AND ENGINEERING

24" WATER LINE ON W BELLFORT FROM STELLA LINK TO BUFFALO SPEEDWAY

STORM WATER POLLUTION PREVENTION PLAN

SHEET 3 OF 4

WBS NO.
S-000900-0125-4

DRAWING SCALE
1"=100'

CITY OF HOUSTON PM
ARTHUR MORRIS, P.E.

SHEET NO. 3 OF 5

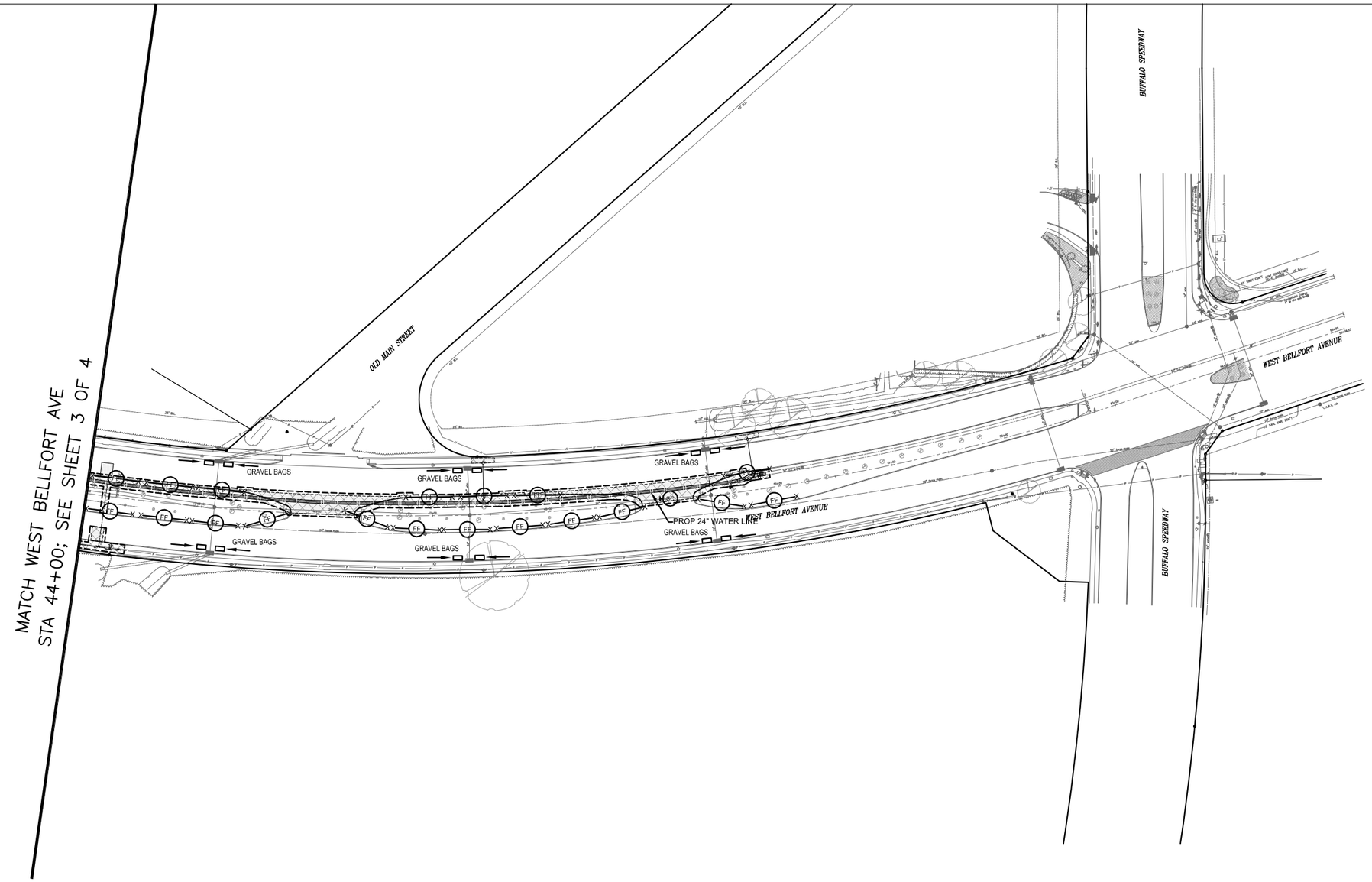

No.	Date	Revisions	App.

PROP LEGEND

- IPB — INLET PROTECTION BARRIER
- DSB — DEWATERING SETTLING BASIN
- FF — FILTER FABRIC FENCE
- RFB — REINFORCED FILTER FABRIC BARRIER
- SURFACE FLOW DIRECTION
- DISTURBED AREA
- SC — STABILIZED CONSTRUCTION ENTRANCE/EXIT
- INLET PROTECTION - GRAVEL BAGS
- PAVEMENT REPLACEMENT AREA

NOTES:

1. CONTRACTOR SHALL PROVIDE STABILIZED CONSTRUCTION ACCESSES AT BOTH ENDS OF EACH CONSTRUCTION SEGMENT.
2. CONTRACTOR SHALL PROVIDE STABILIZED STAGING/PARKING AREA.
3. MAINTENANCE AND INSPECTION OF EROSION/SEDIMENT CONTROL DEVICES SHALL BE PROVIDED PER SWPPP REPORT.
4. INLET PROTECTION BARRIER SHALL NOT IMPEDE TRAFFIC FLOW.

SWTP Surface Water Transmission Program

LAN

KUO & associates, Inc.
Consulting Engineers & Surveyors
10700 Richmond Ave., Ste 113, Houston, Texas 77042
Tel: 713-974-3100, Fax: 713-975-0202
www.kuoassociates.com
TBPE Firm Registration No. F-4578
TBPLS Firm Registration No. 10075600

TTL CORP
P.O. BOX 1537, CYPRESS, TX 77410-1537
TEL: 713-501-6993 FAX: 281-213-9535
(TBPE RN- F-7725)

SURVEYED BY:
KUO & ASSOCIATES, Inc.
C.O.H. Field Book P-5896

CITY OF HOUSTON
DEPARTMENT OF PUBLIC WORKS AND ENGINEERING

24" WATER LINE ON W BELLFORT FROM STELLA LINK TO BUFFALO SPEEDWAY

STORM WATER POLLUTION PREVENTION PLAN

SHEET 4 OF 4

WBS NO.
S-000900-0125-4

DRAWING SCALE
1"=100'

CITY OF HOUSTON PM
ARTHUR MORRIS, P.E.

SHEET NO. 4 OF 5

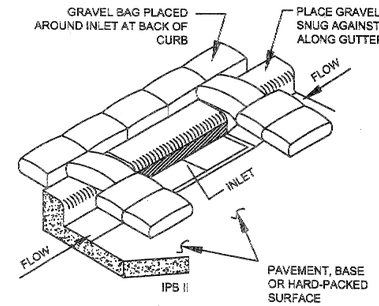

GENERAL NOTES:

1. PLACE GRAVEL BAGS IN THE GUTTER ON EACH SIDE OF THE INLET OPENING.
2. GRAVEL BAGS SHALL BE PLACED TIGHTLY AGAINST THE CURB.
3. PLACE GRAVEL BAGS AT BACK OF CURB ALONG INLET.
4. GRAVEL BAGS SHALL NOT BLOCK THROAT INLET, UNLESS DIRECTED BY ENGINEER.
5. IF THE LINE ADJACENT TO THE INLET IS CLOSED TO TRAFFIC THEN ADDITIONAL GRAVEL BAGS SHALL BE PLACED CONTINUOUSLY ACROSS THE FRONT OF THE INLET, BUT SHALL NOT BLOCK THE THROAT OF THE INLET.

GRAVEL BAG INLET PROTECTION BARRIER
(FOR STAGE II INLETS)

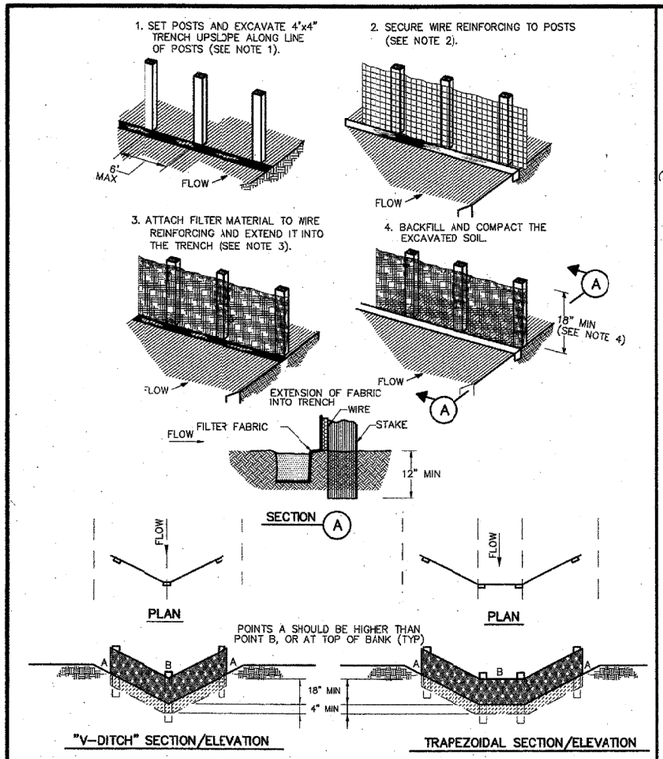

CONSTRUCTION NOTES:

1. SET 2 INCH BY 2 INCH WOODEN STAKES SPACED A MAX OF 6 FEET APART AND EMBEDDED A MIN OF 12 INCHES.
2. WOVEN WIRE REINFORCING TO BE FASTENED SECURELY TO BARRIER POSTS WITH STAPLES.
3. FILTER CLOTH TO BE FASTENED SECURELY TO WOVEN WIRE REINFORCING, WITH TIES SPACED EVERY 24 INCHES AT TOP AND MIDSECTION.
4. MINIMUM HEIGHT OF FILTER SHOULD BE 18 INCHES AND A MAXIMUM OF 36 INCHES ABOVE NATURAL GROUND.
5. WHEN TWO SECTIONS OF FILTER CLOTH ADJOIN EACH OTHER THEY SHALL BE OVERLAPPED 6 INCHES AT THE POSTS, AND FOLDED.
6. SEE COH STANDARD SPECIFICATION FOR FILTER FABRIC BARRIER.

X— (RFB) —X
SYMBOL

REINFORCED FILTER FABRIC BARRIER

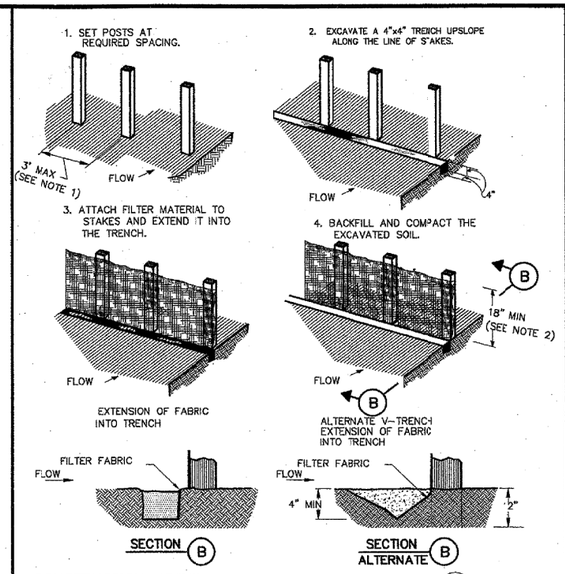

CONSTRUCTION NOTES:

1. 2 INCH THICK BY 2 INCH WOODEN STAKES TO BE SET AT MAX SPACING OF 3 FEET AND EMBEDDED A MIN OF 8 INCHES. IF PREASSEMBLED BARRIER WITH SUPPORT NETTING IS USED, SPACING OF POST MAY BE INCREASED TO 8 FEET MAX.
2. ATTACH FILTER FABRIC TO WOODEN STAKES. FILTER FABRIC BARRIER SHALL HAVE A MIN HEIGHT OF 18 INCHES AND MAX HEIGHT OF 36 INCHES ABOVE NATURAL GROUND.
3. WHEN TWO SECTIONS OF FILTER CLOTH ADJOIN EACH OTHER THEY SHOULD BE OVERLAPPED 6 INCHES AT THE POSTS, AND FOLDED.
4. SEE COH STANDARD SPECIFICATION FOR FILTER FABRIC BARRIER.

FILTER FABRIC BARRIER

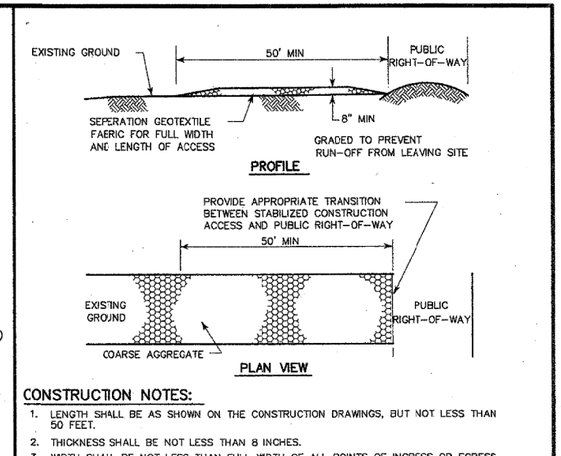

CONSTRUCTION NOTES:

1. LENGTH SHALL BE AS SHOWN ON THE CONSTRUCTION DRAWINGS, BUT NOT LESS THAN 50 FEET.
2. THICKNESS SHALL BE NOT LESS THAN 8 INCHES.
3. WIDTH SHALL BE NOT LESS THAN FULL WIDTH OF ALL POINTS OF INGRESS OR EGRESS.
4. STABILIZATION FOR OTHER AREAS SHALL HAVE THE SAME AGGREGATE THICKNESS AND WIDTH REQUIREMENTS AS THE STABILIZED CONSTRUCTION ACCESS, UNLESS OTHERWISE SHOWN ON THE CONSTRUCTION DRAWINGS.
5. STABILIZED AREA MAY BE WIDENED OR LENGTHENED TO ACCOMODATE A WASHING AREA. AN OUTLET SEDIMENT TRAP MUST BE PROVIDED FOR THE WASHING AREA.
6. COH STANDARD SPECIFICATION FOR STABILIZED CONSTRUCTION ACCESS.
7. STABILIZED CONSTRUCTION ACCESS SHALL BE MAINTAINED FREE OF SEDIMENT FOR THE DURATION OF THE PROJECT.

(SC)
SYMBOL

STABILIZED CONSTRUCTION ACCESS

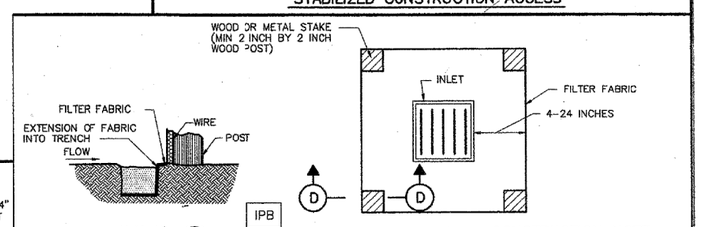

SILT FENCE NLET PROTECTION BARRIER

CONSTRUCTION NOTE:

1. SEE CONSTRUCTION NOTES FOR RFB.

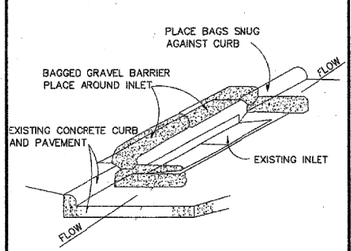

INLET PROTECTION BARRIER
(FOR STAGE II INLETS)
BAGGED GRAVEL BARRIER

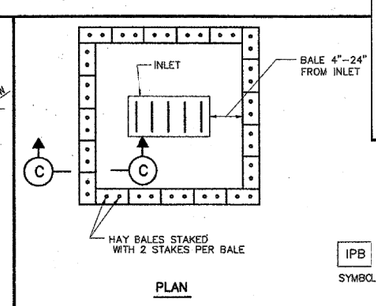

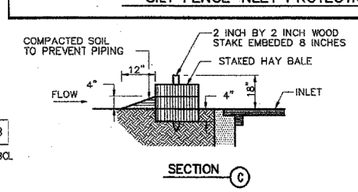

HAY BALE INLET PROTECTION BARRIER

CITY OF HOUSTON
DEPARTMENT OF PUBLIC WORKS AND ENGINEERING

STORM WATER POLLUTION PREVENTION PLAN DETAILS
(NOT TO SCALE)

APPROVED: CITY ENGINEER
APPROVED: DIRECTOR OF PUBLIC WORKS AND ENGINEERING

EFF DATE: JULY-01-2010 DWG NO: 01571-01

No.	Date	Revisions	App.

SWTP Surface Water Transmission Program
LAN

KUO & associates, Inc.
Consulting Engineers & Surveyors
10700 Richmond Ave., Ste 113, Houston, Texas 77042
Tel: 713-975-5169, Fax: 713-975-0201
www.kuoassociates.com
TBPE Firm Registration No. F-4578
TBPLS Firm Registration No. 10075600

TTL CORP
P.O. BOX 1537, CYPRESS, TX 77410-1537
TEL: 713-501-6993 FAX: 281-213-9535
(TBPE RN- F-7726)

SURVEYED BY:
KUO & ASSOCIATES, Inc.
C.O.H. Field Book P-5896

CITY OF HOUSTON
DEPARTMENT OF PUBLIC WORKS AND ENGINEERING

24" WATER LINE ON W BELLFORT FROM STELLA LINK TO BUFFALO SPEEDWAY
STORM WATER POLLUTION PREVENTION PLAN
STANDARD DETAILS

WBS NO. S-000900-0125-4
DRAWING SCALE
NO SCALE
CITY OF HOUSTON PM
ARTHUR MORRIS, P.E.
SHEET NO. 5 OF 5