CITY OF HOUSTON
DEPARTMENT OF PUBLIC WORKS AND ENGINEERING
ENGINEERING AND CONSTRUCTION DIVISION

PROJECT MANUAL

REHABILITATION OF DISTRIBUTION PUMPS, MOTORS, VALVES, PIPING AND PUMP STATION BUILDINGS AT VARIOUS FACILITIES PACKAGE B

WBS No. S-001000-0046-4

VOLUME 1 of 1

Divisions 00 through 16

May 2015

STATE OF TEXAS
ALEXANDER V. KUZOVKOV
108422
LICENSED
PROFESSIONAL ENGINEER

05/15/15

Klotz Associates, Inc.
1160 Dairy Ashford Road, #500
Houston, Texas 77079
281-589-7257
Texas P.E. Firm Reg. # F-929

Document 00010

TABLE OF CONTENTS

NOTE: Bold capitalized Specification Sections are included in the City of Houston Department of Public Works and Engineering Standard Construction Specifications for Wastewater Collection Systems, Water Lines, Storm Drainage, Street Paving and Traffic located here: http://edocs.publicworks.houstontx.gov/engineering-and-construction/specifications/division-02-16-standard-specifications.html; and are incorporated in Project Manuals by reference as if copied verbatim. Documents listed "for filing" are to be provided by Bidder and are not included in this Project Manual unless indicated for example only. The Document numbers and titles hold places for actual documents to be submitted by Contractor during Bid, post-bid, or construction phase of the Project. Specification Sections marked with an asterisk (*) are amended by a supplemental specification, printed on blue paper and placed in front of the Specification it amends. Documents in the 200, 300 and 400 series of Division 00, except for Document 00410B – Bid Form, Part B, are not part of the Contract.

Doc. No.	Document Title	Doc. Date
	INTRODUCTORY INFORMATION	
00010	Table of Contents	08-15-2015
00015	List of Drawings	04-16-2015
00041	List of Prequalified Asbestos and Lead Abatement Contractors	03-21-2012
	BIDDING REQUIREMENTS	
	INSTRUCTIONS TO BIDDERS	
00200	Instructions to Bidders	08-01-2015
00210	Supplementary Instructions to Bidders	08-01-2015
00220	Request for Bid Information	06-11-2004
	INFORMATION AVAILABLE TO BIDDERS	
00320	Geotechnical Information	09-02-2005
00340	Environmental Information	09-14-2005
	BID FORMS AND SUPPLEMENTS	
00410	Bid Form, Parts A & B	08-01-2015
00430	Bidder's Bond (For filing; Example Form)	02-01-2004
00450	Bidder's Statement of MWBE/PDBE/DBE/SBE Status	07-01-2013
00452	Contractor Submission List - Fair Campaign Ordinance	04-30-2004
00453	Bidder's Statement of Residency	02-01-2004
00454	Affidavit of Non-interest	02-01-2004

Doc. No.	Document Title	Doc. Date
00455	Affidavit of Ownership or Control	09-04-2007
00457	Conflict of Interest Questionnaire	02-28-2006
00460	Pay or Play Acknowledgement Form (POP-1A)	07-03-2012
00470	Bidder's MWSBE Participation Plan	08-01-2015
00471	Pre-bid Good Faith Efforts	08-01-2015
00472	Bidder's Goal Deviation Request	08-01-2015
POST-BID PROCEDURES		
00495	Post-bid Procedures	08-01-2013

CONTRACTING REQUIREMENTS

AGREEMENT		
00501	Resolution of Contractor	02-01-2010
00520	Agreement	07-01-2013
00570	Contractor's Revised MWSBE Participation Plan	08-01-2013
00571	Record of Post-Award Good Faith Efforts	08-01-2013
00572	Contractor's Request for Plan Deviation	08-01-2013
BONDS AND CERTIFICATES		
00600	List of Proposed Subcontractors and Suppliers	07-01-2013
00601	Drug Policy Compliance Agreement	02-01-2004
00602	Contractor's Drug Free Workplace Policy (For filing)	
00604	History of OSHA Actions and List of On-the-job Injuries	02-01-2004
00605	List of Safety Impact Positions	02-01-2004
00606	Contractor's Certification of No Safety Impact Positions	02-01-2004
00610	Performance Bond	05-17-2005
00611	Statutory Payment Bond	05-17-2005
00612	One-year Maintenance Bond	05-17-2005
00620	Affidavit of Insurance (with attached Certificates of Insurance)	02-01-2004
00622	Name and Qualifications of Proposed Superintendent (For filing)	
00624	Affidavit of Compliance with Affirmative Action Program	02-01-2004
00630	Certification of Agreement with Pay or Play Program (POP-2)	07-03-2012
00631	City of Houston Pay or Play Program – List of Participating Subcontractors (POP-3)	07-03-2012
00642	Monthly Subcontractor Payment Reporting Form	02-01-2010
00646	Payment Notification Explanation of Withholding	02-01-2010
GENERAL CONDITIONS		
00700	General Conditions	08-15-2015
SUPPLEMENTARY CONDITIONS		
00800	Supplementary Conditions	08-15-2015

Doc. No.	Document Title	Doc. Date
00805	Equal Employment Opportunity Program Requirements	05-01-2012
00808	Requirement for the City of Houston Program for Minority Women, and Small Business Enterprise (MWSBE), and Persons with Disabilities Business Enterprises (PDBE) Program	08-01-2013
00820	Wage Scale for Engineering Construction	02-01-2015
00821	Wage Scale for Building Construction	02-01-2015
00830	Trench Safety Geotechnical Information	02-01-2004
00840	Pay or Play Program Requirements	07-03-2012

ADDENDA AND MODIFICATIONS

SPECIFICATIONS

DIVISION 1 - GENERAL REQUIREMENTS

01110	Summary of Work	04-16-2015
01145	Use of Premises	01-01-2011
01255	Change Order Procedures	08-01-2003
01270S	Measurement and Payment	04-16-2015
*01270	Measurement and Payment	08-01-2003
01292	Schedule of Values	08-01-2003
01312	Coordination and Meetings	08-01-2003
01321	Construction Photographs	08-01-2003
01326	Construction Schedule (Bar Chart)	08-01-2003
01330	Submittal Procedures	08-01-2003
01340	Shop Drawings, Product Data, and Samples	08-01-2003
01351	Environmental Safety and Worker Protection	01-01-2011
01410	TPDES Requirements (with Attachments)	02-01-2011
01422	Reference Standards	08-01-2003
01450	Contractor's Quality Control	08-01-2003
01452	Inspection Services	08-01-2003
01454	Testing Laboratory Services	08-01-2003
01502	Mobilization	08-01-2008
01504	Temporary Facilities and Controls	01-01-2011
01506	Diversion Pumping	08-01-2003
01520	Temporary Field Office	02-08-2012
01562	Tree and Plant Protection	01-01-2011
01570	Storm Water Pollution Prevention Control	01-26-2012
01575	Stabilized Construction Access	02-01-2011
01576	Waste Material Disposal	08-01-2003
01578	Control of Ground and Surface Water	01-01-2011
01580	Project Identification Signs	08-01-2003
01610	Basic Product Requirements	01-01-2011
01630	Product Substitution Procedures	08-01-2003

Doc. No.	Document Title	Doc. Date
01650	Equipment Nomenclature, Data Identification and Data Input	03-01-2014
01725	Field Surveying	01-01-2011
01731	Cutting and Patching	01-01-2011
01732	Procedure for Water Valve Assistance (with Attachments)	08-01-2003
01740	Site Restoration	08-01-2013
01755	Starting Systems	08-01-2003
01770	Closeout Procedures	08-01-2003
01782	Operations and Maintenance Data	08-01-2003
01785	Project Record Documents	08-01-2003

DIVISION 2 - SITE WORK

02084	**FRAMES, GRATES, RINGS, AND COVERS**	**08-01-2008**
02085	**VALVE BOXES, METER BOXES, AND METER VAULTS**	**01-01-2011**
02086	**ADJUSTING MANHOLES, INLETS, AND VALVE BOXES TO GRADE**	**01-01-2011**
02136	**WASTE MATERIAL HANDLING, TESTING AND DISPOSAL**	**01-01-2011**
02201	**SITE PREPARATION, GRADING, RESTORATION AND CLEAN UP FOR WATER STORAGE TANKS**	**01-01-2011**
02221	**REMOVING EXISTING PAVEMENTS AND STRUCTURES**	**07-01-2009**
02260	**TRENCH SAFETY SYSTEM**	**02-01-2011**
02316	**EXCAVATION AND BACKFILL FOR STRUCTURES**	**01-01-2011**
02317	**EXCAVATION AND BACKFILL FOR UTILITIES**	**01-01-2011**
02318	**EXTRA UNIT PRICE WORK FOR EXCAVATION AND BACKFILL**	**01-01-2011**
02319	**BORROW**	**01-01-2011**
02320	**UTILITY BACKFILL MATERIALS**	**01-01-2011**
02321	**CEMENT STABILIZED SAND**	**01-01-2011**
02322	**FLOWABLE FILL**	**08-01-2008**
02336	**LIME-STABILIZED SUBGRADE**	**10-01-2002**
02337	**LIME/FLY-ASH STABILIZED SUBGRADE**	**10-01-2002**
02338	**PORTLAND CEMENT STABILIZED SUBGRADE**	**10-01-2002**
02447	**AUGERING PIPE AND CONDUIT**	**10-01-2002**
02501	**DUCTILE IRON PIPE AND FITTINGS**	**02-01-2011**
02502	**STEEL PIPE AND FITTINGS**	**01-01-2011**
02503	**COPPER TUBING**	**10-01-2002**
02506	**POLYVINYL CHLORIDE PIPE**	**01-01-2011**
02511	**WATER LINES**	**01-01-2011**
02512	**WATER TAP AND SERVICE LINE INSTALLATION**	**04-27-2012**
02513	**WET CONNECTIONS**	**10-01-2002**
02514	**DISINFECTION OF WATER LINES**	**01-01-2011**
02515	**HYDROSTATIC TESTING OF PIPELINES**	**01-01-2011**
02516	**CUT, PLUG, AND ABANDONMENT OF WATER LINES**	**01-01-2011**
02521	**GATE VALVES**	**01-01-2011**

Doc. No.	Document Title	Doc. Date
02522	**BUTTERFLY VALVES**	**01-01-2011**
02524	**AIR RELEASE AND VACUUM RELIEF VALVES**	**01-01-2011**
02525	**TAPPING SLEEVES AND VALVES**	**01-01-2011**
02526	**WATER METERS**	**01-01-2011**
02527	**POLYURETHANE COATINGS ON STEEL OR DUCTILE IRON PIPE**	**10-01-2002**
02528	**POLYETHYLENE WRAP**	**01-01-2011**
02531	**GRAVITY SANITARY SEWERS**	**01-01-2011**
02611	**REINFORCED CONCRETE PIPE**	**02-01-2011**
02621	**GEOTEXTILE**	**10-01-2002**
02631	**STORM SEWERS**	**01-26-2012**
02633	**PRECAST CONCRETE INLETS, HEADWALLS AND WINGWALLS**	**10-01-2002**
02662	**PIPING, VALVES, FITTINGS, AND ACCESSORIES FOR WATER STORAGE TANKS**	**01-01-2011**
02712	**CEMENT STABILIZED BASE COURSE**	**10-01-2002**
02713	**RECYCLED CRUSHED CONCRETE BASE COURSE**	**07-01-2009**
02751	**CONCRETE PAVING**	**07-01-2009**
02752	**CONCRETE PAVEMENT JOINTS**	**10-01-2002**
02753	**CONCRETE PAVEMENT CURING**	**10-01-2002**
02754	**CONCRETE DRIVEWAYS**	**09-01-2002**
02775	**CONCRETE SIDEWALKS**	**10-01-2002**
02911	**TOPSOIL**	**10-01-2002**
02912	**TREE, PLANT, AND HARDSCAPE PROTECTION**	**07-01-2009**
02915	**TREE PLANTING**	**01-01-2011**
02921	**HYDROMULCH SEEDING**	**01-01-2011**
02951	**PAVEMENT REPAIR AND RESTORATION**	**07-01-2009**

DIVISION 3 - CONCRETE

03100	CONCRETE FORMWORK	04-16-2015
03151	JOINTS IN CONCRETE STRUCTURES	04-16-2015
03211	REINFORCING STEEL	04-16-2015
03310	STRUCTURAL CONCRETE	04-16-2015
03315	**CONCRETE FOR UTILITY CONSTRUCTION**	**10-01-2002**
03350	CONCRETE FINISHING	04-16-2015
03390	CONCRETE CURING	04-16-2015
03600	STRUCTURAL GROUT	04-16-2015

DIVISION 4 – MORTAR – NOT USED

DIVISION 5 - METALS

05501	**METAL FABRICATIONS**	**01-01-2011**
05520	PIPE RAILING	04-16-2015

Doc. No.	Document Title	Doc. Date
05532	ALUMINUM GRATING	04-16-2015
DIVISION 6 - WOOD AND PLASTICS – NOT USED		
DIVISION 7 - THERMAL AND MOISTURE PROTECTION – NOT USED		
DIVISION 8 - DOORS AND WINDOWS		
08332	OVERHEAD COILING DOORS	04-16-2015
DIVISION 9 - FINISHES		
09901	**PROTECTIVE COATINGS**	**01-01-2011**
DIVISION 10 - SPECIALTIES – NOT USED		
DIVISION 11 – EQUIPMENT		
11133	HORIZONTAL SPLIT CASE CENTRIFUGAL PUMPS	04-16-2015
11210	VERTICAL TURBINE PUMPS	04-16-2015
11250	POLYETHYLENE STORAGE TANK	04-16-2015
11260	CHLORINATION SYSTEM	04-16-2015
11280	LAS CHEMICAL FEED SYSTEM	04-16-2015
DIVISION 12 - FURNISHINGS – NOT USED		
DIVISION 13 - SPECIAL CONSTRUCTION		
13120	PRECAST SEGMENTAL CONCRETE BUILDINGS	04-16-2015
13300	PROCESS INSTRUMENTATION AND CONTROLS - GENERAL PROVISIONS	10-08-2014
13315	PROCESS INSTRUMENTATION AND CONTROLS – PRODUCTS	04-16-2015
13325	CONTROL PANELS AND PANEL MOUNTED EQUIPMENT	04-16-2015
13430	SYSTEM REQUIREMENTS	04-16-2015
13441	SCADA SOFTWARE ENGINEERING SECURITY AND QUALITY REQUIREMENTS	04-16-2015
DIVISION 14 - CONVEYING SYSTEMS		
14622	ELECTRIC HOIST AND MOTORIZED TROLLEY	04-16-2015
DIVISION 15 – MECHANICAL		
15060	HANGERS AND SUPPORTS	04-16-2015
15070	HANGERS AND SUPPORTS FOR PLUMBING	04-16-2015
15140	DOMESTIC WATER PIPING	04-16-2015
15150	SANITARY WASTE AND VENT PIPING	04-16-2015
15190	MECHANICAL IDENTIFICATION	04-16-2015
15201	VALVES FOR WATER PLANT SERVICE	04-16-2015

Doc. No.	Document Title	Doc. Date
15260	PIPING INSULATION	04-16-2015
15410	PLUMBING FIXTURES	04-16-2015
15430	PLUMBING SPECIALTIES	04-16-2015
15480	TANKLESS WATER HEATER	04-16-2015
15640	**JOINT BONDING AND ELECTRICAL ISOLATION**	**01-01-2011**
15641	**CORROSION CONTROL TEST STATIONS**	**01-01-2011**
DIVISION 16 – ELECTRICAL		
16010	BASIC ELECTRICAL REQUIREMENTS	04-16-2015
16060	ELECTRICAL DEMOLITION	04-16-2015
16111	CONDUIT, FITTINGS AND BOXES	04-16-2015
16120	600 VOLT BUILDING WIRE AND CABLE	04-16-2015
16123	MEDIUM VOLTAGE POWER CABLE	04-16-2015
16126	INSTRUMENTATION CABLE	04-16-2015
16131	DEVICE, PULL AND JUNCTION BOXES	04-16-2015
16140	WIRING DEVICES	04-16-2015
16161	PANELBOARDS	04-16-2015
16170	GROUNDING AND BONDING	04-16-2015
16171	LOW VOLTAGE MOTORS	04-16-2015
16195	ELECTRICAL IDENTIFICATION	04-16-2015
16220	AUTOMATIC TRANSFER SWITCHES	04-16-2015
16361	MEDIUM VOLTAGE METAL ENCLOSED FUSIBLE SWITCHGEAR	04-16-2015
16402	UNDERGROUND DUCT BANKS	04-16-2015
16428	SWITCHBOARD	04-16-2015
16461	DRY-TYPE TRANSFORMERS	04-16-2015
16475	OVERCURRENT PROTECTIVE DEVICES	04-16-2015
16476	DISCONNECTS AND CIRCUIT BREAKERS	04-16-2015
16480	MOTOR CONTROL CENTER	04-16-2015
16481	MOTOR CONTROLLERS	04-16-2015
16484	MEDIUM VOLTAGE MOTOR CONTROLLER SWITCHGEAR	04-16-2015
16950	UNINTERRUPTIBLE POWER SUPPLIES	04-16-2015
16990	FACILITIES FOR CENTERPOINT ENERGY'S USE	04-16-2015

END OF DOCUMENT

SECTION 00015

LIST OF DRAWINGS

SHEET NO.	DWG NO.	DRAWING NAME
GENERAL		
1	G-1	COVER SHEET
2	G-2	DRAWING INDEX
3	G-3	LEGEND, ABBREVIATIONS AND UTILITY NOTES
4	G-4	FACILITY VICINITY MAPS
5	STD-C-1	SITE WORK DETAILS SHEET 1 OF 2
6	STD-C-2	SITE WORK DETAILS SHEET 2 OF 2
7	STD-C-3	WATER LINE DETAILS
8	STD-C-4	CITY OF HOUSTON CONSTRUCTION SIGN DETAIL
9	STD-C-5	STORM WATER POLUTION PREVENTION PLAN DETAILS
10	STD-M-1	MISCELLANEOUS MECHANICAL DETAILS SHEET 1 OF 3
11	STD-M-2	MISCELLANEOUS MECHANICAL DETAILS SHEET 2 OF 3
12	STD-M-3	MISCELLANEOUS MECHANICAL DETAILS SHEET 3 OF 3
13	STD-S-1	STRUCTURAL DETAILS
14	G-E-1	ELECTRICAL LEGEND AND ABBREVIATIONS
DISTRICT 111 #2		
15	111#2-C-1	EXISTING SITE PLAN AND DEMOLITION PLAN
16	111#2-C-2	PROPOSED SITE PLAN
17	111#2-C-3	STORM WATER POLLUTION PREVENTION PLAN
18	111#2-C-4	SURVEY CONTROL MAP FOR DISTRICT 111#2
19	111#2-M-1	BOOSTER PUMPS AND PIPING DEMOLITION PLAN
20	111#2-M-2	BOOSTER PUMPS AND PIPING PROPOSED PLAN
21	111#2-M-3	BOOSTER PUMPS AND PIPING PROPOSED SECTION
22	111#2-S-1	FOUNDATION FOR BOOSTER PUMPS
23	111#2-E-1	EXISTING DEMOLITION ONE LINE DIAGRAM
24	111#2-E-2	MODIFIED ONE LINE DIAGRAM
25	111#2-E-3	EXISTING ELECTRICAL SITE PLAN
26	111#2-E-4	PROPOSED ELECTRICAL SITE PLAN
27	111#2-E-5	EXISTING PUMP BUILDING POWER PLAN
28	111#2-E-6	PANELBOARD SCHEDULES
29	111#2-E-7	ELECTRICAL DETAILS SHEET 1 OF 2
30	111#2-E-8	ELECTRICAL DETAILS SHEET 2 OF 2
31	111#2-E-9	EXISTING CONTROL SYSTEM ARCHITECTURE DIAGRAM
32	111#2-E-10	PROPOSED CONTROL SYSTEM ARCHITECTURE DIAGRAM
33	111#2-E-11	EXISTING PLC INPUT/OUTPUT TABLE SHEET 1 OF 2

SHEET NO.	DWG NO.	DRAWING NAME
34	111#2-E-12	EXISTING PLC INPUT/OUTPUT TABLE SHEET 2 OF 2
35	111#2-E-13	PROPOSED PLC INPUT/OUTPUT TABLE
WEST HOUSTON #3		
36	WH#3-C-1	EXISTING SITE PLAN
37	WH#3-C-2	DEMOLITION PLAN
38	WH#3-C-3	PROPOSED SITE PLAN
39	WH#3-C-4	GRADING AND DETENTION PLAN
40	WH#3-C-5	STORM WATER POLLUTION PREVENTION PLAN
41	WH#3-C-6	PROPOSED SANITARY SEWER SERVICE LINE AND WATER SERVICE LEAD
42	WH#3-C-7	PROPOSED YARD PIPING PLAN
43	WH#3-C-8	SURVEY CONTROL MAP
44	WH#3-M-1	BOOSTER PUMPS AND PIPING DEMOLITION PLAN
45	WH#3-M-2	BOOSTER PUMPS AND PIPING PROPOSED PLAN
46	WH#3-M-3	BOOSTER PUMPS AND PIPING PROPOSED SECTION
47	WH#3-M-4	PROPOSED LAS BUILDING PLAN AND LAS SCHEMATIC
48	WH#3-S-1	FOUNDATION FOR FUEL TANK AND RESTROOM BLDG
49	WH#3-S-2	LAS CHEMICAL CONTAINMENT AREA AND LAS BLDG
50	WH#3-S-3	FOUNDATION FOR PROPOSED BOOSTER PUMP AREA
51	WH#3-S-4	LAS CHEMICAL INJECTION VAULT DETAIL
52	WH#3-S-5	TRANSFORMER FOUNDATION
53	WH#3-P-1	SANITARY AND WATER PLANS
54	WH#3-P-2	FIXTURE SCHEDULE AND NOTES
55	WH#3-P-3	RISERS AND DETAILS
56	WH#3-E-1	EXISTING DEMOLITION ONE LINE DIAGRAM
57	WH#3-E-2	MODIFIED ONE LINE DIAGRAM
58	WH#3-E-3	EXISTING ELECTRICAL SITE PLAN
59	WH#3-E-4	PROPOSED ELECTRICAL SITE PLAN
60	WH#3-E-5	EXISTING PUMP BUILDING LIGHTING & POWER PLAN
61	WH#3-E-6	PROPOSED PUMP BUILDING LIGHTING & POWER PLAN
62	WH#3-E-7	PROPOSED LAS BUILDING LIGHTING & POWER PLAN
63	WH#3-E-8	EXISTING RESTROOM LIGHTING & POWER PLAN
64	WH#3-E-9	PLC PANELS INTERIOR
65	WH#3-E-10	PANELBOARD SCHEDULES AND LIGHT FIXTURE SCHEDULE
66	WH#3-E-11	WATER WELL CONTROL DIAGRAM
67	WH#3-E-12	ELECTRICAL MCC ELEVATION DETAILS
68	WH#3-E-13	ELECTRICAL DETAILS
69	WH#3-E-14	PROPOSED CONTROL SYSTEM ARCHITECTURE DIAGRAM
70	WH#3-E-15	EXISTING PLC INPUT/OUTPUT TABLE

SHEET NO.	DWG NO.	DRAWING NAME
71	WH#3-E-16	PROPOSED PLC INPUT/OUTPUT TABLE
PARK TEN CENTRAL		
72	PTC-C-1	EXISTING SITE PLAN
73	PTC-C-2	PROPOSED SITE PLAN
74	PTC-C-3	GRADING PLAN
75	PTC-C-4	STORM WATER POLLUTION PREVENTION PLAN
76	PTC-C-5	SURVEY CONTROL MAP
77	PTC-M-1	BOOSTER PUMPS AND PIPING DEMOLITION PLAN
78	PTC-M-2	BOOSTER PUMPS AND PIPING PROPOSED PLAN
79	PTC-M-3	BOOSTER PUMPS AND PIPING PROPOSED SECTIONS
80	PTC-S-1	CONCRETE FOUNDATION FOR BUILDING, PLAN AND SECTION
81	PTC-S-2	TRANSFORMER FOUNDATION
82	PTC-H-1	ELECTRICAL BUILDING HVAC PLAN
83	PTC-E-1	EXISTING DEMOLITION ONE LINE DIAGRAM
84	PTC-E-2	PROPOSED ONE LINE DIAGRAM SHEET 1 OF 3
85	PTC-E-3	PROPOSED ONE LINE DIAGRAM SHEET 2 OF 3
86	PTC-E-4	PROPOSED ONE LINE DIAGRAM SHEET 3 OF 3
87	PTC-E-5	OVERALL SITE PLAN
88	PTC-E-6	EXISTING PUMP BUILDING DEMOLITION PLAN
89	PTC-E-7	EXISTING PUMP BUILDING LIGHTING AND POWER PLANS
90	PTC-E-8	ELECTRICAL BUILDING EQUIPMENT PLAN
91	PTC-E-9	ELECTRICAL BUILDING LIGHTING PLAN
92	PTC-E-10	ELECTRICAL BUILDING POWER PLAN
93	PTC-E-11	PANELBOARD SCHEDULES AND LIGHT FIXTURE SCHEDULE
94	PTC-E-12	WATER WELL CONTROL DIAGRAM
95	PTC-E-13	BOOSTER PUMP WITH RVSS & BYPASS CONTROL DIAGRAM
96	PTC-E-14	BOOSTER PUMP WITHOUT RVSS CONTROL DIAGRAM
97	PTC-E-15	PLC CONTROL PANEL ELEVATION
98	PTC-E-16	MOTOR CONTROL CENTER "PTC" ELEVATION
99	PTC-E-17	LIGHTING CONTROL SCHEMATIC DIAGRAM
100	PTC-E-18	ELECTRICAL DETAILS
101	PTC-E-19	EXISTING CONTROL SYSTEM ARCHITECTURE DIAGRAM
102	PTC-E-20	PROPOSED CONTROL SYSTEM ARCHITECTURE DIAGRAM
103	PTC-E-21	EXISTING PLC INPUT/OUTPUT TABLE
104	PTC-E-22	PROPOSED PLC INPUT/OUTPUT TABLE SHEET 1 OF 2
105	PTC-E-23	PROPOSED PLC INPUT/OUTPUT TABLE SHEET 2 OF 2
SHARPSTOWN #1		
106	SH#1-C-1	EXISTING CONDITION SITE AND DEMOLITION PLAN

SHEET NO.	DWG NO.	DRAWING NAME
107	SH#1-C-2	PROPOSED SITE PLAN
108	SH#1-C-3	GRADING PLAN
109	SH#1-C-4	STORM WATER POLLUTION PREVENTION PLAN
110	SH#1-C-5	PROPOSED YARD PIPING PLAN
111	SH#1-C-6	SURVEY CONTROL MAP FOR SHARPSTOWN 1
112	SH#1-M-1	BOOSTER PUMPS AND PIPING PROPOSED PLAN
113	SH#1-M-2	BOOSTER PUMPS AND PIPING PROPOSED SECTIONS SHEET 1 OF 2
114	SH#1-M-3	BOOSTER PUMPS AND PIPING PROPOSED SECTIONS SHEET 2 OF 2
115	SH#1-S-1	CONCRETE FOUNDATION FOR BUILDING PLAN AND SECTION
116	SH#1-S-2	TRANSFORMER FOUNDATION
117	SH#1-H-1	BUILDING HVAC PLAN
118	SH #1-E-1	EXISTING ONE LINE DIAGRAM
119	SH #1-E-2	PROPOSED ONE LINE DIAGRAM SHEET 1 OF 3
120	SH #1-E-3	PROPOSED ONE LINE DIAGRAM SHEET 2 OF 3
121	SH #1-E-4	PROPOSED ONE LINE DIAGRAM SHEET 3 OF 3
122	SH #1-E-5	EXISTING SITE PLAN
123	SH #1-E-6	PROPOSED SITE PLAN
124	SH #1-E-7	BUILDING EQUIPMENT PLAN
125	SH #1-E-8	BUILDING LIGHTING PLAN
126	SH #1-E-9	BUIDLING POWER PLAN
127	SH #1-E-10	480V MOTOR CONTROL DIAGRAM
128	SH #1-E-11	5KV MOTOR CONTROL DIAGRAM
129	SH #1-E-12	SWITCHGEAR "SH1" ELEVATION
130	SH #1-E-13	MCC "SH1" ELEVATION
131	SH #1-E-14	BOOSTER PUMP BLOCK DIAGRAM
132	SH #1-E-15	PLC CONTROL PANEL ELEVATION
133	SH #1-E-16	PANELBOARD SCHEDULES AND LIGHT FIXTURES SCHEDULE
134	SH #1-E-17	ELECTRICAL DETAILS SHEET 1 OF 2
135	SH #1-E-18	ELECTRICAL DETAILS SHEET 2 OF 2
136	SH #1-E-19	PROPOSED CONTROL SYSTEM ARCHITECTURE DIAGRAM
137	SH #1-E-20	EXISTING PLC INPUT/OUPUT TABLE
138	SH #1-E-21	PROPOSED PLC INPUT/OUTPUT TABLE SHEET 1 OF 2
139	SH #1-E-22	PROPOSED PLC INPUT/OUTPUT TABLE SHEET 2 OF 2

END OF DOCUMENT

Document 00041

LIST OF PRE-QUALIFIED ASBESTOS/LEAD ABATEMENT, MOLD & SOIL REMEDIATION, DEMOLITION AND PETROLEUM STORAGE TANK REMOVAL CONTRACTORS

1.01 DOCUMENT INCLUDES

A. Authorization

B. List of Authorized Contractors.

2.0 RELATED DOCUMENTS

A. Section 13280 – Hazardous Materials Remediation

B. Section 13281&13282 – Abatement of Asbestos/Lead Containing Materials

3.0 AUTHORIZATION

A. The list of Contractors Pre-qualified for Asbestos/Lead Abatement, Mold & Soil Remediation, Demolition & Petroleum Storage Tank Removal ("List") was authorized on March 21, 2012, by City of Houston Council Motion No. 12-0180.

B. Only those firms on the List can be utilized by Bidder in subcontracting for asbestos & lead abatement, mold & soil remediation, demolition & petroleum storage tank removal included in the Work.

C. The List is administered by General Services Department. All inquiries should be directed to Gabriel Mussio (832-393-8079).

4.0 LIST OF AUTHORIZED CONTRACTORS

A. As of the date specified in paragraph 3.0.A., all contractors listed in paragraph 4.0.B were licensed in the State of Texas for the type of work. Authorized Contractors must maintain there license to be on the list.

B. Authorized Contractors:

1. AAR Incorporated, 6640 Signat Drive, Houston, Texas 77041

2. A & M Environmental, LLC, 6536 Supply Row, Houston, Texas 77011

3. ARC Abatement Inc., 6827 Signat Drive, Houston, Texas 77041

4. AIA General Contractors, Inc., 18331 Running Vine Lane, Spring, Texas 77379

5. Arrow Services, Inc., 10202 Airline Drive, Suite A, Houston, Texas 77037

6. Basic Environmental Group, LLC., 1839 Key Biscayne Court, Houston,

Texas 77065

7. Cherry Environmental Services, Inc., 4501 Cherry Lane, Santa Fe, Texas 77517

8. Clark-Tech Environmental Systems, Inc., 1515 Globe Street, Houston, Texas 77034

9. CRG Environmental Services, LLC., 2504 Avenue I, Rosenberg, Texas 77471

10. DNB Enterprises, Inc., 12969 West Hardy, Houston, Texas 77037

11. Dunphey Petroleum Services, Inc., 3505 Daphne, Houston, Texas 77021

12. EC Government Services, 5850 San Felipe, Suite 400, Houston, Texas 77057

13. Effective Environmental, Inc., 9950 Chemical Road, Pasadena, Texas 77507

14. GenTech Construction Company, LLC., 2211 West 34th Street, Houston, Texas 77018

15. Hazard Assessment Leaders, Inc., dba HAL, Inc., 5311 Petty Street, Houston, Texas 77007

16. Inland Environmental, Ltd., PO Box 6751, Kingwood, Texas 77325

17. J.T.B. Services, Inc., 9026 Lambright, Houston, Texas 77075

18. NCM, 16421 Aldine Westfield Road, Houston, Texas 77032

19. PfP Abatement Group, LLC., 3823 Shadow Trail Drive, Houston, Texas 77084

20. PEMCO, Inc., PO Box 2009, Pearland, Texas 77588-2009

21. RNDI Companies, Inc., 2255 Ridge Road, Suite 216, Rockwell, Texas 75807

22. Separation Systems Consultants, Inc., 17041 El Camino Real, Suite 200 Houston, Texas 77058

23. Texas Environmental Control, Inc., 4623 Steffani Lane, Houston, Texas 77041

24. Weston Solutions, Inc., 5599 San Felipe, Suite 700, Houston, Texas 77056

25. 1 Priority Environmental Services, Inc., 2573 Gravel Drive, Fort Worth, Texas 76118

END OF DOCUMENT

Document 00200

TABLE OF CONTENTS

INSTRUCTIONS TO BIDDERS

PARA	TITLE	PAGE
1.0	*RELATED DOCUMENTS*	3
2.0	*DEFINITIONS*	3
3.0	*NOTICE TO BIDDERS*	3
4.0	*BID DOCUMENTS*	4
5.0	*EXAMINATION OF DOCUMENTS, SITE, AND LOCAL CONDITIONS*	4
6.0	*INTERPRETATIONS DURING BIDDING*	4
7.0	*ADDENDA*	4
8.0	*SUBSTITUTION OF PRODUCTS*	5
9.0	*PREPARATION OF BIDS*	5
10.0	*BID SUBMISSION*	5
11.0	*BID SECURITY*	5
12.0	*SUBCONTRACTORS AND SUPPLIERS*	6
13.0	*MODIFICATION OR WITHDRAWAL OF BID*	6
14.0	*BID DISQUALIFICATION*	6
15.0	*PREBID MEETING*	6
16.0	*OPENING OF BIDS*	6
17.0	*EVALUATION AND CONSIDERATION OF BIDS*	6
18.0	*ACCEPTANCE OF THE BID*	6

Document 00200

INSTRUCTIONS TO BIDDERS

1.0 *RELATED DOCUMENTS*

A. Document 00210 – Supplementary Instructions to Bidders.

B. Document 00320 – Geotechnical Information.

C. Document 00330 – Existing Conditions.

D. Document 00410 – Bid Form, Parts A & B.

E. Document 00495 – Post-Bid Procedures.

F. Document 00520 – Agreement.

G. Document 00700 – General Conditions.

H. Document 00800 – Supplementary Conditions.

2.0 *DEFINITIONS*

A. Definitions set forth in Document 00700 – General Conditions and in other documents of Project Manual, are applicable to Bid Documents.

B. *Addendum:* Written or graphic instrument issued prior to Bid opening, which clarifies, modifies, corrects, or changes Bid Documents.

C. *Alternate:* The total amount bid for additions to work, as described in Section 01110 – Summary of Work. Each Alternate includes cost of effects on adjacent or related components, and Bidder's overhead and profit.

D. *Bid:* A complete and properly signed offer to perform the Work in accordance with this Document and Document 00210 – Supplementary Instructions to Bidders.

E. *Bid Date:* Date and time set for receipt of Bids as stated in Document 00210 – Supplementary Instructions to Bidders, or as modified by Addenda.

F. *Bid Documents:* Project Manual, Drawings, and Addenda.

G. *Bid Supplement: A* Bid submittal that is required in Document 00410 – Bid Form.

H. *Bidder:* Person or firm, identified in Document 00410B – Bid Form – Part B, including its successors, and its authorized representative.

I. *Code:* Code of Ordinances, Houston, Texas.

J. *Low Bidder:* Apparent successful Bidder that qualifies as a responsible Bidder and that submits Bid with lowest Total Bid Price.

K. *Project Manager:* Person designated in Document 00100 – Advertisement for Bids and Document 00220 – Request for Bid Information to represent the City during bidding and post-bid periods.

L. *Project Manual:* Volume assembled for the Work that includes the bidding requirements, sample forms, Conditions of the Contract, and Specifications.

M. *Security Deposit:* A certified check, cashier's check, or bid bond in the amount of 10 percent of the Total Bid Price.

N. *Total Bid Price:* Total amount bid for performing the Work as identified by Bidder in Document 00410B – Bid Form – Part B, which amount includes:

1. Stipulated Price;
2. Total Base Unit Prices;
3. Total Extra Unit Prices;
4. Total Cash Allowances; and
5. Total Alternates.

3.0 *NOTICE TO BIDDERS*

A. The City of Houston Fair Campaign Ordinance makes it unlawful for a Contractor to offer any contribution to a candidate for City elective office (including elected officers and officers-elect) during a certain period of time prior to and following the award of the Contract by the City Council. The term "Contractor" includes proprietors of proprietorships, all partners of partnerships, and all officers, directors, and holders of 10 percent or more of the outstanding shares of corporations. A statement disclosing the names and business addresses of each of those persons will be required to be submitted with each bid or proposal; for a City Contract. Bidder shall complete and submit Document 00452 – Form A, Contractor Submission List, City of Houston Fair Campaign Ordinance, with its Bid to comply with this requirement. See Chapter 18 of the Code for further information.

B. Chapter 15, Article VIII, of the City's Code provides that no contract shall be let, nor any other business transaction entered into, by the City with any person indebted to the City or a qualifying entity, if the contractor or transaction comes within the provisions of Section 15-1 (c) of the Code. Exceptions are provided in Section 15-126 of the Code. Bidder shall complete and submit Document 00455 – Affidavit of Ownership or Control, with its Bid to comply with this requirement.

C. Neither bidder(s) nor any person acting on bidder(s)'s behalf shall attempt to influence the outcome of the award by the offer, presentation or promise of gratuities, favors, or anything of value to any appointed or elected official or employee of the City of Houston, their families or staff members. All inquiries regarding the solicitation are to be directed to the designated City Representative identified on the first page of the solicitation. Upon issuance of the solicitation through the pre-award phase and up to the date the City Secretary publicly posts notice of any City Council agenda containing the applicable award, aside from bidder's formal response to the solicitation, through the pre-award phase, written requests for clarification during the period officially designated for such purpose by the City Representative, neither bidder(s) nor persons acting on their behalf shall communicate with any appointed or elected official or employee of the City of Houston, their families or staff through written or oral means in an attempt to persuade or influence the outcome of the award or to obtain or deliver information intended to or which could reasonably result in an advantage to any bidder. However, nothing in this paragraph shall prevent a bidder from making public statements to the City Council convened for a regularly scheduled session after the official selection has been made and placed on the City Council agenda for action, or to a City Council committee convened to discuss a recommendation regarding the solicitation.

4.0 *BID DOCUMENTS*

A. The Bid Documents may be obtained at location specified in Document 00210 – Supplementary Instructions to Bidders.

B. The Bid Documents are made available only for the purpose of bidding on the Work. Receipt of Bid Documents does not grant a license for other purposes.

C. On receipt of Bid Documents, Bidder shall verify that documents are legible and complete, compare contents of Project Manual with Document 00010 – Table of Contents, and compare Index of Drawings with Document 00015 – List of Drawings. Bidder shall notify Project Manager if Bid Documents are incomplete.

D. If City of Houston Standard Specifications or Standard Details are required by the Project Manual, Bidder shall refer to Document 00210 – Supplementary Instructions to Bidders for purchase information.

5.0 *EXAMINATION OF DOCUMENTS, SITE, AND LOCAL CONDITIONS*

A. Bidder shall examine Project site, become familiar with local conditions under which the Work shall be performed, conduct appropriate investigations, and correlate personal observations with requirements of the Bid Documents before submitting a Bid.

B. Bidder shall make site investigations to the extent Bidder deems necessary to ascertain extent of subsurface conditions.

C. Failure of Bidder to perform the investigations prior to submitting a Bid does not relieve Bidder of responsibility for investigations, interpretations and proper use of available information in the preparation of its Bid.

D. Bidder shall observe limitations of access to occupied or restricted site as stated in Document 00210 – Supplementary Instructions to Bidders.

6.0 *INTERPRETATIONS DURING BIDDING*

A. Bidder shall immediately submit Document 00220 – Request for Bid Information to Project Manager upon finding errors, discrepancies, or omissions in Bid Documents. Confirmation of receipt of questions by the City is the responsibility of Bidder. Verbal discussions and answers are not binding.

B. Document 00220 – Request for Bid Information must be received at least 10 days before the Bid Date to allow issuance of Addenda in accordance with Paragraph 7.O.D. Replies, if issued, are by Addenda.

7.0 *ADDENDA*

A. Addenda that affect bidding requirements are applicable only during applicable only through issuance of the Notice to Proceed. Addenda that affect the Contract are a part of the Contract.

B. BIDDERS WHO SUBMIT A BID ON THIS PROJECT SHALL BE PRESUMED TO HAVE RECEIVED ALL ADDENDA AND TO HAVE INCLUDED ANY COST THEREOF IN THEIR BIDS, REGARDLESS OF WHETHER THEY ACKNOWLEDGE THE ADDENDA OR NOT.

C. The City will make Addenda available at same location where the Bid Documents may be obtained. The City will notify plan holders of record when Addenda are available. Bidders are responsible for obtaining Addenda after notification.

D. No Addendum will be issued later than noon on Monday before Bid Date, except Addenda with minor clarifications, withdrawing request for Bids, or postponing Bid Date.

8.0 *SUBSTITUTION OF PRODUCTS*

A. No substitutions of Products will be considered during the bidding period.

9.0 *PREPARATION OF BIDS*

A. Bidder shall fill in applicable blanks in Document 00410A&B – Bid Form – Parts A & B and Bid Supplements. In addition, Bidder shall bid all Alternates. Bidder shall properly sign Document 00410B -Bid Form.

B. Bidder shall initial all pages, except signature page, of Document 00410B – Bid Form – Part B.

C. Bidder is responsible for all costs incurred by the Bidder, associated with preparation of its Bid and compliance with Post-bid Procedures.

D. Bidder may not adjust preprinted price on line items stating "Fixed Unit Price" in the description on the Bid Form.

E. Bidder may increase, but not decrease, preprinted price on line items stating "Minimum Bid Price" in the description on the Bid Form by crossing out the minimum and inserting revised price on the line above. Bidder **may not** decrease the preprinted price on line items stating "Minimum Bid Price".

F. Bidder may decrease, but not increase, preprinted price on line items stating "Maximum Bid Price" in the description on the Bid Form by crossing out the maximum and inserting revised price on the line above. Bidder **may not** increase the preprinted price on line items stating "Maximum Bid Price".

G. Bidder shall insert a price no greater than the maximum preprinted range and no less than the preprinted range for line items stating "Fixed Range Unit Price" in the description on the Bid Form by crossing out prices noted and inserting revised price on the line above.

H. Bidder may not adjust Cash Allowance amounts.

10.0 *BID SUBMISSION*

A. City Secretary will receive Bids on Bid Date at location specified in Document 00210 – Supplementary Instructions to Bidders.

B. Bids submitted after Bid Date will be returned to Bidder unopened.

C. Verbal, facsimile, or electronic Bids are invalid and will not be considered.

D. Bidder shall submit in person or by mail one copy of the signed Document 00410 – Bid Form, Parts A and B, along with required Security Deposit, and required Bid Supplements, in a sealed, opaque envelope. In addition, Bidder shall clearly identify Project, Bid Date and Bidder's name on outside of envelope. If forwarded by mail, the sealed envelope containing the Bid must be enclosed in another envelope addressed for postal delivery.

11.0 *BID SECURITY*

A. Bidder shall submit a Security Deposit with its Bid.

B. Certified Check or Cashier's Check

1. Bidder shall make check payable to the City of Houston.

2. A check is submitted on the condition that if Bidder is named Low Bidder and fails either to timely and properly submit documents required in Document 00495 – Post-Bid Procedures, the City will cash the check in accordance with Paragraph 11.0.E.

C. Bid Bond

1. The bid bond must be a valid and enforceable bond, signed by a surety that complies with other requirements set out by law.

2. The bid bond must name the City of Houston as obligee, and be signed by the Bidder as principal and signed and sealed by the surety.

3. The bid bond must be conditioned such that if Bidder is named Low Bidder and then fails to timely and properly submit documents required in Document 00495 – Post-Bid Procedures, surety will be obligated to pay to the City an amount in accordance with Paragraph 11.0.E.

D. Security Deposits will be retained until after the Contract is awarded or all Bids are rejected.

E. Low Bidder forfeits Security Deposit if it fails to timely and properly submit documents required in Document 00495 – Post-Bid Procedures. The City may claim an amount equal to the difference between the Total Bid Price of the defaulting Bidder and the Total Bid Price of the Bidder awarded the Contract. If Security Deposit is a check, the City will reimburse any remaining balance to the defaulting Bidder.

12.0 *SUBCONTRACTORS AND SUPPLIERS*

A. The City may reject proposed Subcontractors or Suppliers.

B. Refer to Document 00800 – Supplementary Conditions, for MWBEPDBE, DBE and SBE goals.

13.0 *MODIFICATION OR WITHDRAWAL OF BID*

A. A Bidder may modify or withdraw a Bid submitted before the Bid Date by written notice to the City Secretary. The notice may not reveal the amount of the original Bid and must be signed by the Bidder.

B. Bidder may not modify or withdraw its Bid by verbal, facsimile, or electronic means.

C. A withdrawn Bid may be resubmitted up to the time designated for receipt of Bids.

14.0 *BID DISQUALIFICATION*

A. The City may disqualify a Bid if the Bidder:

1. fails to provide required Security Deposit in the proper amount;

2. improperly or illegibly completes information required by the Bid Documents;

3. fails to sign Bid or improperly signs Bid;

4. qualifies its Bid; or

5. improperly submits its Bid.

B. When requested, Low Bidder shall present satisfactory evidence that Bidder has regularly engaged in performing construction work as proposed, and has the capital, labor, equipment, and material to perform the Work.

15.0 *PREBID MEETING*

A. A prebid meeting is scheduled to be held at the place, time, and date listed in Document 00210 – Supplementary Instructions to Bidders.

B. All Bidders, subcontractors, and suppliers are invited to attend.

C. Representatives of City Engineer will attend.

16.0 *OPENING OF BIDS*

A. Bids are opened by the City Secretary and publicly read in City Council Chambers on the Public Level in City Hall Annex at 11:00 a.m. on Bid Date.

B. Place and date of Bid opening may be changed in accordance with Sections 15-3(b)(5) and 15-3(b)(6) of the City Code.

17.0 *EVALUATION AND CONSIDERATION OF BIDS*

A. Project Manager will tabulate, record and evaluate Bids.

B. The City may reject all Bids or may reject any defective Bid.

18.0 *ACCEPTANCE OF THE BID*

A. The City will send to Low Bidder Document 00498 – Notice of Intent to Award. Acceptance by the City is conditioned upon Bidder's timely and proper submittal of documents required in Document 00495 – Post-Bid Procedures.

B. The Bid remains open to acceptance and is irrevocable for the period of time stated in Document 00410A – Bid Form – Part A.

END OF DOCUMENT

Document 00210

SUPPLEMENTARY INSTRUCTIONS TO BIDDERS

The following Paragraphs modify Document 00200 - Instructions to Bidders. Where a portion of the Instructions to Bidders is modified or deleted by these Supplementary Instructions, the unaltered portions of the Instructions to Bidders remains in effect.

2.0 – DEFINITIONS: Add the following Paragraphs to this Section:

O. *Office of Business Opportunity (OBO):* All references to Affirmative Action Contract Compliance Division (AACC) set forth in Document 00700 – General Conditions and in other documents of the Project Manual, shall refer to, and include, the Office of Business Opportunity.

3.0 - NOTICE TO BIDDERS: Add the following Paragraph to this Section:

C. The City will award this contract to a "Local Business", as that term is defined in Section 15-176 of the City of Houston Code of Ordinances ("the Code"):

- If the bid of the Local Business is less than $100,000 and is the lowest responsible bid or is within 5% of the lowest bid received, or
- If the bid of the Local Business is more than $100,000 and is the lowest responsible bid or is within 3% of the lowest bid received, and
- Unless the Director determines that such an award would unduly interfere with contract needs, as provided in Section 15-181 of the Code.

If there is no bid of a Local Business that meets these criteria, the City will award the contract to the lowest responsible bidder.

4.0 – BID DOCUMENTS: Add the following Paragraphs to this Section:

A. Add the following Paragraph A.1:

1. Bid documents may only be obtained electronically at the City's website: http://bidsets.publicworks.houstontx.gov/.

D. Add the following Paragraph D.1:

1. Copies of the City Standard Specifications and Details may be acquired at no cost on the City's website **http://documents.publicworks.houstontx.gov/document-center/cat_view/88-engineering-and-construction/92-specifications/208-division-02-16-standard-specifications.html**

E. The following plan rooms, whose names, addresses, phone and fax numbers were last updated on April 9, 2007, have been authorized by the City to display Bid Documents for examination:
(Note: The Bid Documents furnished to the plan rooms for examination can be in electronic format, in hard copies, or in any other formats pertaining to each City Contracting Division's discretion.)

1. AMTEK Information Services, Inc., 4001 Sherwood Lane, Houston, TX 77092, 713-956-0100, Fax 713-956-5340, Email: planroom@amtekusa.com

2. Associated Builders & Contractors, Inc., (ABC), 3910 Kirby, Suite 131, Houston, TX 77098-4151, 713-523-6222, Fax 713-874-0747. Email: lori@abchouston.org

3. Associated General Contractors (AGC-BB) Building Branch, 3825 Dacoma, Houston, TX 77092-8717, 713-843-3700, Fax 713-843-3701. Email: karla.s@agchouston.org

4. Associated General Contractors, (AGC-HHUI), Highway, Heavy Utilities and Industrial Branch, 2400 Augusta St., Suite 180, Houston, TX 77057, 713-334-7100, Fax 713-334-7130. Email: houston@agctx.org (Attention: Mel Keyser)

5. Construction Information Network, 1225 North Loop West, Suite 550, Houston, TX 77008, 713-868-2233 ext. 329, Fax 866-852-2713. Email: paul.tilford@cnsx.com

6. F. W. Dodge Corporation, 4101 Greenbriar, Suite 320, Houston, TX 77098, 713-529-4895, Fax 713-524-7639. Email: terrie_harris@mcgraw-hill.com

7. Hispanic Contractors Association of Houston (HCA-GHA), 11 Parker Road, Suite 7, Houston, TX 77241, 713-699-2732 or 832-754-3705, Fax 713-695-1556, Email: hispanicontractorsassociation@yahoo.com; or Randymagdaleno@yahoo.com

8. Houston Minority Business Development Center, 2900 Woodridge, Suite 124, Houston, TX 77087, 713-644-0821, Fax 713-644-3523. Email: gtamez@gacompanies.com

9. Reed Construction Data, 30 Technology Parkway South, Suite 100, Norcross, GA – 30092-8629. Tel. 1-800-424-3996 or 1-800-699-8640; Fax 1-800-317-0870 or 1-800-508-5370.

10. The Builders' Exchange of Texas, Inc., 3910 Kirby, Suite 131, Houston, TX 77098, 210-564-6900, Fax: 210-564-6921, Email: houston@bxtx.com

F. Add the following Paragraph F.1:

1. **Designation as a City Business or Local Business**

To be designated as a City or Local Business for the purpose of the Hire Houston First Program, as set out in Article XI of Chapter 15 of the Houston City Code, a bidder or proposer must submit the Hire Houston First Application and Affidavit to the Director of the Mayor's Office of Business Opportunity (OBO) and receive notice that the designation has been approved prior to submission of a bid or proposal. Submit with your bid a valid official letter from OBO with your designation as a City or Local Business.

5.0 - EXAMINATION OF DOCUMENTS, SITE, AND LOCAL CONDITIONS: Insert the following paragraph:

A. Add the following Paragraph D.1:

1. A site inspection tour will be conducted immediately after the Prebid Meeting if requested by bidders.

9.0 – PREPARATION OF BIDS: Add the following Paragraph I to this Paragraph:

I. For math errors the City encounters in analyzing Bids, the following guidance will be used:

In the event of a conflict between:	The Bid Price is:
1. Individual Unit Price and Extension of that Unit Price	Individual Unit Price times Estimated Quantity
2. A Unit Price extension and total of Unit Price Extensions	Sum of all Individual Unit Price Extensions
3. Individual Alternate and total of Alternates	Sum of all Individual Alternates
4. Individual subtotals for Stipulated Price, Base Unit Prices, Extra Unit Prices, Contractor Bonus, Cash Allowances, and Alternates; and the Total Bid Price	Sum of Individual subtotals for Stipulated Price, Base Unit Prices, Extra Unit Prices, Contractor Bonus, Cash Allowances and Alternates

10.0 – BID SUBMISSION: Add the following Paragraph A.1 to this Section:

A. Add the following Paragraph A.1:

1. City Secretary will receive Bids at 900 Bagby, Room P101, Houston, Texas until 10:30 a.m., local time on October 15, 2015.

15.0 – PREBID MEETING: Add the following Paragraph A.1 to this Section:

A. Add the following Paragraph A.1:

1. A Prebid Meeting will be held at 10:00 A.M. on Tuesday, September 29, 2015, in 15th Floor, Conference Room No. 1546 at 611 Walker Street, Houston, Texas 77002.

END OF DOCUMENT

Document 00220

REQUEST FOR BID INFORMATION

PROJECT: Rehabilitation of Distribution Pumps, Motors, Valves, Piping and Pump Station Buildings at Various Facilities – Package B

PROJECT No.: WBS No. S-001000-0046-4

TO: Tina Yao, P.E.
15th Floor
611 Walker, Houston, Texas 77002

Phone No. (832) 395-2324
Fax No. (832) 395-2344
Email Addr. Tina.Yao@houstontx.gov

(Type or Print question legibly; use back if more space is needed)

_____
_____
_____
_____
_____
_____
_____
_____
_____

This request relates to _____ and/or _____
Drawing / Detail No. Specification Section No.

Attachments to this request: _____
_____
_____

_____ _____
Signature Date

_____
(Type or Print Name)

_____
(Type or Print Company Name)

END OF DOCUMENT

Document 00320

GEOTECHNICAL INFORMATION

1. DOCUMENT INCLUDES

   A. Soils investigation reports.
   B. Bidder's responsibilities.

2. RELATED DOCUMENTS

   A. Document 00340 – Environmental Information
   B. Section 02260 - Trench Safety Systems

3. SITE INVESTIGATION REPORTS

   A. In the design and preparation of Contract documents for this Project, the City and Design Consultant have used information in geotechnical reports for the investigation and analysis of soils and subsurface conditions at the Project site.

   B. An electronic copy of the report for this project is included in a CD-Rom affixed to the inside front cover of the project manual.

   C. Neither the City nor Design Consultant is responsible for accuracy or completeness of any information or data.

4. GEOTECHNICAL REPORTS

   A. Report No.: G14-197 Prepared by (Firm Name): Associated Testing Laboratories, Inc.; Title: Report Geotechnical Investigation Proposed Water Plant Improvements – Package B / WBS No. S-001000-0046-4.; Report Date: March 12, 2015 No. of Pages: 18 + Attachments + Contents.

5. BIDDER RESPONSIBILITIES

   A. Bidder shall take full responsibility for interpretation and use of information contained in above listed reports for its bidding and construction purposes.

   B. Bidder may perform additional soils investigations as Bidder deems appropriate.

END OF DOCUMENT

Document 00340

ENVIRONMENTAL INFORMATION

1.0 DOCUMENT INCLUDES

A. Environmental Site Assessment, if applicable.

B. Asbestos and Lead Surveys, if applicable.

C. Bidder's responsibilities.

2.0 RELATED DOCUMENTS

A. Document 00320 - Geotechnical Information

3.0 SITE INVESTIGATION REPORTS

A. In the design and preparation of Contract documents for this Project, the City and Design Consultant have used information in environmental site assessment reports for the investigation and analysis of soils and subsurface conditions at the Project site.

B. In the design and preparation of Contract documents for this Project, the City and Design Consultant have relied upon information in surveys taken for Asbestos-containing Materials (ACMs) and lead at the Project site.

C. An electronic copy of each report for this project is included in a CD-Rom affixed to the inside front cover of the project manual.

D. Neither the City nor Design Consultant is responsible for accuracy or completeness of any information or data.

4.0 REPORTS

A. Environmental Assessment Surveys

Not Appilcable.

B. Asbestos and Lead Surveys

1. Report No.: Task No. 14-13 Prepared by (Firm Name): ECMS, Inc. Title: Asbestos Survey report / Water Facility - Park Ten Central # 1 & 2 Well / WBS No. S-001000-0046-4.; Report Date: January 15, 2015; No. of Pages: 6 + Attachments +Contents.

2. Report No.: Task No. 14-13 Prepared by (Firm Name): ECMS, Inc. Title: Asbestos Survey report / Water Facility – West Houston # 3 / WBS No. S-001000-0046-4.; Report Date: January 15, 2015; No. of Pages: 6 + Attachments +Contents.

3. Report No.: Task No. 14-13 Prepared by (Firm Name): ECMS, Inc. Title: Asbestos Survey report / Water Facility – District 111 # 2 Well / WBS No. S-001000-0046-4.; Report Date: January 15, 2015; No. of Pages: 6 + Attachments + Contents

4. Report No.: Task No. 14-13 Prepared by (Firm Name): ECMS, Inc. Title: Asbestos Survey report / Water Facility - Sharpstown # 1 Plant 1A & 3A Wells / WBS No. S-001000-0046-4.; Report Date: January 15, 2015; No. of Pages: 6 + Attachments + Contents.

5.0 BIDDER RESPONSIBILITIES

A. Bidder shall take full responsibility for interpretation and use of information contained in above listed reports for bidding and construction purposes.

B. Bidder may perform additional investigations as Bidder deems appropriate.

END OF DOCUMENT

Document 00410A

BID FORM – PART A

To: **The Honorable Mayor and City Council of the City of Houston**
City Hall Annex
900 Bagby Street
Houston, Texas 77002

Project: Rehabilitation of Pump, Motors, Valves, Piping and Buildings at Various Facilities – Package B

Project No.: WBS S-001000-0046-4

Bidder: _____

(Print or type full name of proprietorship, partnership, corporation, or joint venture.)

OFFER

A. Total Bid Price: Having examined the Project location and all matters referred to in Bid Documents for the Project, we, the undersigned, offer to enter into a Contract to perform the Work for the Total Bid Price shown on the signature page of this Document

B. Security Deposit: Included with the Bid is a Security Deposit in the amount of 10 percent of the Total Bid Price subject to terms described in Document 00200 – Instructions to Bidders.

C. Period for Bid Acceptance: This offer is open to acceptance and is irrevocable for 90 days from Bid Date. That period may be extended by mutual written agreement of the City and Bidder.

D. Addenda: All Addenda have been received. Modifications to Bid Documents have been considered and all related costs are included in the Total Bid Price.

E. Bid Supplements: The following documents are attached:

[X] Security Deposit *(as defined in Document 00200 – Instructions to Bidders)*

[X] Document 00450 - Bidder's Statement of MWSBE Status

[X] Document 00452 - Contractor's Submission List - Fair Campaign Ordinance Form A

[X] Document 00453 – Bidder's Statement of Residency *(not required for AIP funded project)*

[X] Document 00454 - Affidavit of Non-interest

[X] Document 00455 - Affidavit of Ownership or Control

[ ] Document 00456 - Bidder's Certificate of Compliance with Buy American Program *(required for AIP funded project)*

[X] Document 00457 – Conflicts of Interest Questionnaire (CIQ)

[ ] Document 00458 - Bidder's Certificate Regarding Foreign Trade Restriction *(required for AIP funded project)*

[ ] Document 00459 - Contractor's Statement Regarding Previous Contracts Subject to EEO *(required for AIP funded project)*

[X] Document 00460 – Pay or Play Acknowledgement Form (POP 1-A)

[X] Document 00470 – Bidder's MWSBE Participation Plan *(required unless no MWSBE participation goal is provided in Document 00800* (the "Goal")).

[ ] Document 00471 – Bidder's Record of Good Faith Efforts *(required if the goal in Bidder's Participation Plan–Document 00470 is lower than the Goal).*

[ ] Document 00472 – Bidder's Goal Deviation Request *(required if the goal in Bidder's Participation Plan–Document 00470 is lower than the Goal).*

[X] Others as listed: Valid official letter from OBO with your designation as a City or Local Business *(Bidder's Participation Hire Houston First)*

CONTRACT TIME

A. If offer is accepted, Contractor shall achieve Date of Substantial Completion within 550 days after Date of Commencement of the Work, subject to adjustments of Contract Time as provided in the Contract.

Document 00410B

BID FORM – PART B

1.0 TOTAL BID PRICE HAS BEEN CALCULATED BY BIDDER, USING THE FOLLOWING COMPONENT PRICES AND PROCESS (PRINT OR TYPE NUMERICAL AMOUNTS):

A. STIPULATED PRICE: $ N/A

(Total Bid Price; minus Base Unit Prices, Extra Unit Prices, Cash Allowances and All Alternates, if any)

B. BASE UNIT PRICE TABLE:

Item No.	Spec. Ref	Base Unit Description	Units	Est. Quantity	Unit Price	Total in Figures
District 111 #2						
1	01502	Mobilization	LS	1	$29,800(1)	$29,800(1)
2	01270S	Storm Water Pollution Prevention Control Measures	LS	1		
3	01270S	Civil and site work including demolition, site grading and restoration	LS	1		
4	01270S	Concrete Work	LS	1		
5	11210	Vertical Turbine Pump and Motor Assembly – 500 gpm, 30 hp	EA	2		
6	11210	Vertical Turbine Pump and Motor Assembly – 700 gpm, 40 hp	EA	1		
7	01270S	Modifications to pump suction and discharge piping, including pipe, fittings, valves accessories, pipe supports, disinfection and testing	LS	1		
8	01270S	Electrical, Instrumentation and Control modifications	LS	1		
				Total District 111 #2	$_____	

Bidder's Initials [ ]

Item No.	Spec. Ref	Base Unit Description	Units	Est. Quantity	Unit Price	Total in Figures
Park Ten Central						
9	01502	Mobilization	LS	1	$84,400(1)	$84,400(1)
10	01270S	Storm Water Pollution Prevention Control Measures	LS	1		
11	01270S	Civil and site work including demolition, storm sewer, site grading and restoration	LS	1		
12	01270S	Concrete Work	LS	1		
13	11133	Horizontal Split Case Pump and Motor Assembly – 500 gpm, 40 hp	EA	1		
14	11133	Horizontal Split Case Pump and Motor Assembly – 1,250 gpm, 100 hp	EA	2		
15	01270S	Modifications to pump suction and discharge piping, including pipe, fittings, valves accessories, pipe supports, disinfection and testing	LS	1		
16	13120	Precast Concrete Building	LS	1		
17	01270S	Electrical, Instrumentation and Control modifications	LS	1		
18	01270S	HMI Node License	LS	1	$8,800(2)	
				Total Park Ten Central	**$**_____	
Sharpstown #1						
19	01502	Mobilization	LS	1	$119,970(1)	$119,970(1)
20	01270S	Storm Water Pollution Prevention Control Measures	LS	1		
21	01270S	Civil and site work including demolition, storm sewer, tree removal, site grading	LS	1		

Bidder's Initials [ ]

Item No.	Spec. Ref	Base Unit Description	Units	Est. Quantity	Unit Price	Total in Figures
		and restoration				
22	01270S	Concrete Work	LS	1		
23	11133	Horizontal Split Case Pump and Motor Assembly – 500 gpm, 40 hp	EA	1		
24	11133	Horizontal Split Case Pump and Motor Assembly – 2,500 gpm, 150 hp	EA	2		
25	01270S	Modifications to pump suction and discharge piping, including pipe, fittings, valves accessories, pipe supports, disinfection and testing	LS	1		
26	11260	Chlorination System	LS	1		
27	13120	Precast Concrete Building	LS	1		
28	14622	Electric Crane, Hoist and Motorized Trolley	EA	1		
29	01270S	Electrical, Instrumentation and Control modifications	LS	1		
				Total Sharpstown #1	**$_____**	
West Houston #3						
30	01502	Mobilization	LS	1	$58,600(1)	$58,600(1)
31	01270S	Storm Water Pollution Prevention Control Measures	LS	1		
32	01270S	Civil and site work including demolition, storm sewer, site grading and restoration	LS	1		
33	01270S	Concrete Work	LS	1		
34	11210	Vertical Turbine Pump and Motor Assembly – 950 gpm, 50 hp	EA	3		

Bidder's Initials [ ]

Item No.	Spec. Ref	Base Unit Description	Units	Est. Quantity	Unit Price	Total in Figures
35	01270S	Modifications to pump suction and discharge piping, including pipe, fittings, valves accessories, pipe supports, disinfection and testing	LS	1		
36	01270S	LAS Feed System, including polyethylene storage tank, piping, fittings and accessories	LS	1		
37	13120	Precast Concrete Building	LS	1		
38	01270S	Restroom Plumbing, Modification, and Relocation	LS	1		
39	01270S	Electrical, Instrumentation and Control modifications	LS	1		
				Total West Houston #3	**$_____**	

BASE UNIT PRICE TOTAL _____

Bidder's Initials [ ]

C. EXTRA UNIT PRICE TABLE:

Item No.	Spec. Ref	Extra Unit Short Title	Units	Est. Quantity	Unit Price	Total in Figures
40	02318	Extra Hand Excavation	CY	20	$15.00(2)	$300.00(2)
41	02318	Extra Machine Excavation	CY	50	$20.00(2)	$1,000.00(2)
42	02318	Extra Placement Backfill Material	CY	50	$6.00(2)	$300.00(2)
43	01270S	Abatement and disposal of 1 mercury pressure switches. Includes abatement plan and regulatory reporting.	LS	1	$2,500.00(2)	$2,500.00(2)
44	16111	1" Rigid Aluminum Conduit installed above ground	LF	600	$10.50(2)	$6,300.00(2)
45	16111	2" Rigid Aluminum Conduit installed above ground	LF	400	$19.50(2)	$7,800.00(2)
46	16111	3" Rigid Aluminum Conduit installed above ground	LF	400	$35.50(2)	$14,200.00(2)
47	16120	Copper No. 14 AWG conductor with XHHW-2 insulation, installed	LF	3,000	$0.75(2)	$3,750.00(2)
48	16120	Copper No. 12 AWG conductor with XHHW-2 insulation, installed	LF	4,000	$0.92(2)	$3,680.00(2)
49	16120	Copper No. 10 AWG conductor with XHHW-2 insulation, installed	LF	2,000	$1.14(2)	$2,280.00(2)

Item No.	Spec. Ref	Extra Unit Short Title	Units	Est. Quantity	Unit Price	Total in Figures
50	16120	Copper No. 6 AWG conductor with XHHW-2 insulation, installed	LF	2,000	$1.70(2)	$3,400.00(2)
51	16120	Copper No. 2 AWG conductor with XHHW-2 insulation, installed	LF	1,000	$2.75(2)	$2,750.00(2)
52	16120	Copper No. 1 AWG conductor with XHHW-2 insulation, installed	LF	500	$3.70(2)	$1,850.00(2)
53	16120	Copper No. 1/0 AWG conductor with XHHW-2 insulation, installed	LF	500	$4.60(2)	$2,300.00(2)
54	16120	Copper No. 3/0 AWG conductor with XHHW-2 insulation, installed	LF	500	$6.10(2)	$3,050.00(2)
55	16120	Copper No. 500 kcmil copper conductor with XHHW-2 insulation, installed	LF	600	$17.00(2)	$10,200.00(2)
56	16123	Copper No. 2/0 (5KV) conductor, installed	LF	400	$21.00(2)	$8,400.00(2)
57	16126	2/C or 3/C, #16 AWG twisted shielded instrument cable, installed	LF	2,000	$2.10(2)	$4,200.00(2)
58	16402	1" PVC Schedule 40 Conduit Installed in Underground Duct	LF	1,000	$2.60(2)	$2,600.00(2)

Item No.	Spec. Ref	Extra Unit Short Title	Units	Est. Quantity	Unit Price	Total in Figures
		Bank				
59	16402	2" PVC Schedule 40 Conduit Installed in Underground Duct Bank	LF	1,000	$3.90(2)	$3,900.00(2)
60	16402	4" PVC Schedule 40 Conduit Installed in Underground Duct Bank	LF	500	$5.90(2)	$2,950.00(2)
61	16402	Duct bank trenching, rebar, concrete encasement and backfill for duct banks where the top of the ducts is maximum 48" below grade	LF	300	$50.00(2)	$15,000.00(2)

EXTRA UNIT PRICE TOTAL _____

D. CASH ALLOWANCE TABLE:

Item No.	Spec. Ref	Cash Allowance Short Title	Cash Allowance in Figures
62	01110	Building Permit Fees	$50,000(1)
63	01110	CenterPoint Energy Electrical Service	$175,000(1)
TOTAL CASH ALLOWANCES			$225,000(1)

REST OF PAGE INTENTIONALLY LEFT BLANK

Bidder's Initials [ ]

E. TOTAL BID PRICE: $_____
(Add Totals for Items A., B., C., and D. above)

2.0 SIGNATURES: By signing this Document, I agree that I have received and reviewed all Addenda and considered all costs associated with the Addenda in calculating the Total Bid Price.

Bidder: _____
(Print or type full name of your proprietorship, partnership, corporation, or joint venture.*)

**By: _____
Signature Date

Name: _____
(Print or type name) Title

Address: _____
(Mailing)

_____
(Street, if different)

Telephone and Fax Number: _____
(Print or type numbers)

* If Bid is a joint venture, add additional Bid Form signature sheets for each member of the joint venture.

** Bidder certifies that the only person or parties interested in this offer as principals are those named above. Bidder has not directly or indirectly entered into any agreement, participated in any collusion, or otherwise taken any action in restraint of free competitive bidding.

Note: This document constitutes a government record, as defined by § 37.01 of the Texas Penal Code. Submission of a false government record is punishable as provided in § 37.10 of the Texas Penal Code.

Footnotes for Tables B through E:
(1) Fixed Unit Price determined prior to Bid. Cannot be adjusted by the Bidder.
(2) Minimum Bid Price determined prior to Bid. Can be increased by the Bidder, but not decreased, by crossing out the Minimum and inserting revised price on the line above. **Cannot** be decreased by the Bidder.
(3) Maximum Bid Price determined prior to Bid. Can be decreased by the Bidder, but not increased, by crossing out the Maximum and inserting revised price on the line above. A Bid that increases the Maximum Bid Price may be found non-conforming and non-responsive. **Cannot** be increased by the Bidder.
(4) Fixed Range Bid Price determined prior to Bid. Unit Price can be adjusted by Bidder to any amount within the range defined by crossing out prices noted and noting revised price on the line above.

Bidder's Initials [ ]

Document 00430

BIDDER'S BOND

THAT WE, _____, as Principal,
(Bidder)
("Bidder"), and the other subscriber hereto, _____, as Surety, do hereby acknowledge ourselves to be held and firmly bound to the City of Houston, a municipal corporation, in the sum of _____ Dollars ($_____) (an amount equal to 10 percent of the Total Bid Price, including Cash Allowances and Alternates, if any, for the payment of which sum, well and truly to be made to the City of Houston and its successors, the Bidder and Surety do bind themselves, their heirs, executors, administrators, successors, and assigns, jointly and severally.

THE CONDITIONS OF THIS OBLIGATION ARE SUCH THAT:

WHEREAS, the Bidder has submitted on or about this day a proposal offering to perform the following:

_____
(Project Name, Location and Number)
in accordance with the Drawings, Specifications, and terms and conditions related thereto to which reference is hereby made.

NOW, THEREFORE, if the Bidder's offer as stated in the Document 00410 – Bid Form is accepted by the City, and the Bidder executes and returns to the City Document 00520 – Agreement, required by the City, on the forms prepared by the City, for the Work and also executes and returns the same number of the Performance, Payment and Maintenance Bonds (such bonds to be executed by a Corporate Surety authorized by the State Board of Insurance to conduct insurance business in the State of Texas, and having an underwriting limitation in at least the amount of the bond) and other submittals as required by Document 00495 - Post-Bid Procedures, in connection with the Work, within the Contract Time, then this obligation shall become null and void; otherwise it is to remain in full force and effect.

If Bidder is unable to or fails to perform the obligations undertaken herein, the undersigned Bidder and Surety shall be liable to the City for the full amount of this obligation which is hereby acknowledged as the amount of damages which will be suffered by the City on account of the failure of such Bidder to perform such obligations, the actual amount of such damages being difficult to ascertain.

Notices required or permitted hereunder shall be in writing and shall be deemed delivered when actually received or, if earlier, on the third day following deposit in a United States Postal Service post office or receptacle, with proper postage affixed (certified mail, return receipt requested), addressed to the respective other Party at the address prescribed in the Contract documents, or at such other address as the receiving Party may hereafter prescribe by written notice to the sending Party.

IN WITNESS THEREOF, the Bidder and Surety have signed and sealed this instrument on the respective dates written below their signatures and have attached current Power of Attorney.

ATTEST, SEAL: (if a corporation)
WITNESS: (if not a corporation)

By: _____
Name:
Title:

ATTEST/SURETY WITNESS: (SEAL)

By: _____
Name:
Title:
Date:

_____
(Name of Bidder)

By: _____
Name:
Title:
Date:

_____
(Full Name of Surety)

_____
(Address of Surety for Notice)

_____
(Telephone Number of Surety)

By: _____
Name:
Title:
Date:

END OF DOCUMENT

Document 00450

BIDDER'S STATEMENT OF MWBE/PDBE/DBE/SBE STATUS

This certifies that the status of the Bidder, _____, in
(Bidder's Name)
regard to the City of Houston Code of Ordinances, Chapter 15, Article V, relating to City-wide percentage goals for contracting with Minority and Women-owned Business Enterprises (MWBE) and Disadvantaged Business Enterprises (DBE), Chapter 15, Article VI, relating to City-wide percentage goals for contracting with Persons with Disabilities Business Enterprises (PDBE) and Chapter 15, Article IX, relating to City-wide percentage goals for contracting with a Small Business Enterprise (SBE) is as follows:

1. Bidder (individual, partnership, corporation) is [__] is not [__] a Minority Business Enterprise as certified by the Office of Business Opportunity.

2. Bidder (individual, partnership, corporation) is [__] is not [__] a Women-owned Business Enterprise as certified by the Office of Business Opportunity

3. Bidder (individual, partnership, corporation) does [__] does not [__] declare itself to be a Persons with Disabilities Business Enterprise as defined above.

4. Bidder (individual, partnership, corporation) does [__] does not [__] declare itself to be a Disadvantaged Business Enterprise as defined above.

5. Bidder (individual, partnership, corporation) does [__] does not [__] declare itself to be a Small Business Enterprise as defined above.

Signature: _____

Title: _____

Date: _____

END OF DOCUMENT

Document 00452
Form A
CONTRACTOR SUBMISSION LIST
CITY OF HOUSTON FAIR CAMPAIGN ORDINANCE

The City of Houston Fair Campaign Ordinance makes it unlawful for a Contractor to offer any contribution to a candidate for City elective office (including elected officers-elect) during a certain period of time prior to and following the award of the Contract by the City Council. The term "Contractor" includes proprietors of proprietorships, partners or joint venturers having an equity interest of 10 percent or more for the partnership or joint venture, and officers, directors and holders of 10 percent or more of the outstanding shares of corporations. Submission of a statement disclosing the names and business addresses of each of those persons is required with each Bid/Proposal for a City Contract. See Chapter 18 of the City of Houston Code of Ordinances for further information.

This list is submitted under the provisions of Section 18-36(b) of the City of Houston Code of Ordinances in connection with the attached Bid/Proposal of:

Firm or Company Name: _____
Firm or Company Address: _____
_____

The firm/company is organized as indicated below. Check one as applicable and attach additional pages if needed to supply the required names and addresses.

[ ] SOLE PROPRIETOR

Name _____ _____
Proprietor Address

[ ] A PARTNERSHIP

LIST EACH PARTNER HAVING EQUITY INTEREST OF 10% OR MORE OF PARTNERSHIP (IF NONE STATE "NONE")

Name _____ _____
Partner Address

Name _____ _____
Partner Address

[ ] A CORPORATION

LIST ALL DIRECTORS OF THE CORPORATION (IF NONE STATE "NONE")

Name _____ _____
Director Address

Name _____ _____
Director Address

Name _____ _____
Director Address

LIST ALL OFFICERS OF THE CORPORATION (IF NONE STATE "NONE")

Name _____ _____
Officer Address

Name _____ _____
Officer Address

Name _____ _____
Officer Address

LIST ALL INDIVIDUALS OWNING 10% OR MORE OF OUTSTANDING SHARES OF STOCK OF THE CORPORATION (IF NONE STATE "NONE")

Name _____ _____
Owner Address

Name _____ _____
Owner Address

Name _____ _____
Owner Address

I certify that I am duly authorized to submit this list on behalf of the firm, that I am associated with the firm in the capacity noted below, and that I have knowledge of the accuracy of the information provided herein.

_____
Signature

_____
Printed Name

_____
Title

Note: This list constitutes a government record as defined by § 37.01 of the Texas Penal Code.

END OF DOCUMENT

Document 00453

BIDDER'S STATEMENT OF RESIDENCY

The City may not award a contract for general construction, services, or purchases to a Nonresident Bidder unless Nonresident's Bid is lower than the lowest Bid submitted by a responsible Texas Resident Bidder by the same amount that a Texas Resident bidder would be required to underbid the Nonresident Bidder to obtain a comparable contract in the state in which Nonresident's principle place of business is located.

1. This certifies that the Bidder, _____, is a State of Texas Resident Bidder as defined in TEX. GOVT. CODE ANN. § 2252.001(4) (Vernon 1994).

   _____ _____
   Signature Title

   "Texas Resident Bidder" means a bidder whose principal place of business is in this State, and includes a Contractor whose ultimate parent company or majority owner has its principal place of business in this State. *When bidder cannot sign 1, above, proceed to 2.*

2. a. _____ is a resident of _____ and is a Nonresident Bidder as defined in TEX. GOVT. CODE ANN. § 2252.001(3) (Vernon 1994).

   _____ _____
   Signature Title

   "Nonresident Bidder" means a bidder whose principal place of business is not in this State, but excludes a contractor whose ultimate parent company or majority owner has its principal place of business in this State.

   b. The State of _____ _____ have a state statute giving
   Bidder's resident state Does or Does Not
   preference to resident bidders.

   _____ _____
   Signature Title

   If the answer to 2.b is that your state does have a statute giving preference to resident bidders, then you must provide a copy and proceed to 3.

3. A copy of the State of _____ statute is attached.

   _____ _____
   Signature Title

   _____
   Date

END OF DOCUMENT

Document 00454

AFFIDAVIT OF NON-INTEREST

BEFORE ME, the undersigned authority, a Notary Public in and for the State of Texas, on this day personally appeared _____, who
Affiant

being by me duly sworn on his oath stated that he is _____, of
Title

_____,
Name of Firm

the firm named and referred to and in the foregoing; and that he knows of no officer, agent, or employee of the City of Houston being in any manner interested either directly or indirectly in such Contract.

_____
Affiant's Signature

SWORN AND SUBSCRIBED before me on _____.
Date

_____
Notary Public in and for the State of TEXAS

_____
Print or type name

My Commission Expires: _____
Expiration Date

END OF DOCUMENT

Document 00455

AFFIDAVIT OF OWNERSHIP OR CONTROL

ORIG. DEPT.: DEPARTMENT OF PUBLIC WORKS AND ENGINEERING **FILE/I.D. NO.:** S-001000-0046-4

INSTRUCTION: ENTITIES USING AN ASSUMED NAME SHOULD DISCLOSE SUCH FACT TO AVOID REJECTION OF THE AFFIDAVIT. THE FOLLOWING FORMAT IS RECOMMENDED: CORPORATE/LEGAL NAME DBA ASSUMED NAME.

STATE OF _____ §
§ **AFFIDAVIT OF OWNERSHIP OR CONTROL**
COUNTY OF _____ §

BEFORE ME, the undersigned authority, on this day personally appeared _____ [*FULL NAME*] (hereafter "Affiant"), _____ [*STATE TITLE/CAPACITY WITH CONTRACTING ENTITY*] of _____ [*CONTRACTING ENTITY'S CORPORATE/LEGAL NAME*] ("Contracting Entity"), who being by me duly sworn on oath stated as follows:

1. Affiant is authorized to give this affidavit and has personal knowledge of the facts and matters herein stated.

2. Contracting Entity seeks to do business with the City in connection with _____ [*DESCRIBE PROJECT OR MATTER*] which is expected to be in an amount that exceeds $50,000.

3. The following information is submitted in connection with the proposal, submission or bid of Contracting Entity in connection with the above described project or matter.

4. Contracting Entity is organized as a business entity as noted below (check box as applicable).

FOR PROFIT ENTITY:

[ ] SOLE PROPRIETORSHIP
[ ] CORPORATION
[ ] PARTNERSHIP
[ ] LIMITED PARTNERSHIP
[ ] JOINT VENTURE
[ ] LIMITED LIABILITY COMPANY
[ ] OTHER (Specify type in space below)

NON-PROFIT ENTITY:

[ ] NON-PROFIT CORPORATION
[ ] UNINCORPORATED ASSOCIATION

_____

_____

_____

5. The information shown below is true and correct for the Contracting Entity and all owners of 5% or more of the Contracting Entity and, where the Contracting Entity is a non-profit entity, the required information has been shown for each officer, *i.e.*, president, vice-president, secretary, treasurer, etc. ***[NOTE: IN ALL CASES, USE FULL NAMES, LOCAL BUSINESS AND RESIDENCE ADDRESSES AND TELEPHONE NUMBERS. DO NOT USE POST OFFICE BOXES FOR ANY ADDRESS. INCLUSION OF E-MAIL ADDRESSES IS OPTIONAL, BUT RECOMMENDED. ATTACH ADDITIONAL SHEETS AS NEEDED.]***

Contracting Entity

Name: _____

Business Address *[NO./STREET]* _____

[CITY/STATE/ZIP CODE] _____

Telephone Number (____)_____

Email Address *[OPTIONAL]* _____

Residence Address *[NO./STREET]* _____

[CITY/STATE/ZIP CODE] _____

Telephone Number (____)_____

Email Address *[OPTIONAL]* _____

5% Owner(s) or More (IF NONE, STATE "NONE.")

Name: _____

Business Address *[NO./STREET]* _____

[CITY/STATE/ZIP CODE] _____

Telephone Number (____)_____

Email Address *[OPTIONAL]* _____

Residence Address *[NO./STREET]* _____

[CITY/STATE/ZIP CODE] _____

Telephone Number (____)_____

Email Address *[OPTIONAL]* _____

6. *Optional Information*

Contracting Entity and/or _____ [***NAME OF OWNER OR NON-PROFIT OFFICER***] is actively protesting, challenging or appealing the accuracy and/or amount of taxes levied against _____ [***CONTRACTING ENTITY, OWNER OR NON-PROFIT OFFICER***] as follows:

Name of Debtor: _____

Tax Account Nos. _____

Case or File Nos. _____

Attorney/Agent Name _____

Attorney/Agent Phone No. (_____)_____

Tax Years _____

Status of Appeal ***[DESCRIBE]*** _____

_____

_____

_____

Affiant certifies that he or she is duly authorized to submit the above information on behalf of the Contracting Entity, that Affiant is associated with the Contracting Entity in the capacity noted above and has personal knowledge of the accuracy of the information provided herein, and that the information provided herein is true and correct to the best of Affiant's knowledge and belief.

_____
Affiant

SWORN TO AND SUBSCRIBED before me this _____ day of _____, 20_____.

(Seal)

_____
Notary Public

NOTE:
This affidavit constitutes a **government record** as defined by Section 37.01 of the Texas Penal Code. Submission of a false government record is punishable as provided in Section 37.10 of the Texas Penal Code. Attach additional pages if needed to supply the required names and addresses.

END OF DOCUMENT

Document 00457

Conflict of Interest Questionnaire

****

Print out latest version of CIQ form from website listed below:

****

Local Government Code Chapter 176 requires Bidders with the City of Houston ("City") to file a Conflict of Interest Questionnaire with the City Secretary of the City of Houston.

The Conflict of Interest Questionnaire is available for downloading on the Texas Ethics Commission's website at: http://www.ethics.state.tx.us/forms/CIQ.pdf. The completed Conflict of Interest Questionnaire will be posted on the City Secretary's website. Also you will find a list of the City Local Government Officers on the City Secretary's website.

For your convenience the CIQ form is attached as part of this document. Although the City has provided this document for the Bidders convenience, it is the Bidders responsibility to submit the latest version of the CIQ form as promulgated by the Texas Ethics Commission.

The Failure of any Bidder to comply with this law is a Class C misdemeanor.

END OF DOCUMENT

Document 00460
(POP -1)
City of Houston
Pay or Play Program
Acknowledgement Form

It has been determined that the project currently open for bidding meets the criteria of the City of Houston Pay or Play program. This form acknowledges your awareness of the Pay or Play program which is authorized by Ordinance 2007-534. Your signature below affirms that you will comply with the requirements of the program if you are the successful bidder/proposer, and ensure the same on behalf of subcontracts subject to the Pay or Play Program.

I declare under penalty of perjury under the laws of the State of Texas that if awarded this contract which meets the criteria for the City of Houston's Pay or Play Program, I will comply with all requirements of the Pay or Play Program in accordance with Executive Order 1-7.

***Fill out all information below and submit this form with your bid/proposal packet.**

_____
Solicitation Number

_____ _____
Signature Date

_____ _____
Print Name City Vendor ID

_____ _____
Company Name Phone Number

_____
Email Address

Note: For more information contact your POP Liaison or the POP Contract Administrator. All contact information can be found on www.houstontx.gov →Departments→Office of Business Opportunity→Pay or Play.

Document 00470

BIDDER'S MWSBE PARTICIPATION PLAN

ne Bidder or Proposer shall submit this completed form with the bid, to demonstrate the Bidder/Proposer's plan to meet the contract-specific MWSBE goal ("contract goal"). If the Bidder or Proposer cannot meet the contract goal, the Bidder/Proposer has the burden to demonstrate "Good Faith Efforts", which shall include correctly and accurately preparing and submitting this form, a Record of Good Faith Efforts (Document 00471), a Request for Deviation from the Goal (Document 00472), and providing supporting documentation evidencing their "Good Faith Efforts", as required by the City of Houston's Good Faith Efforts Policy (Document 00808). The City will review the Participation Plan and Good Faith Efforts at the time of bid opening. Visit http://www.houstontx.gov/obo for more information.

City Contract Goal	MBE 13%	WBE 7%	• MBE and WBE Goals are two separate Contract Goals. • Any excess of one Goal cannot be applied to meet another Goal. • An SBE can be applied to the MBE and/or WBE Goal, but not to exceed 4%.

NAICS Code (6 digit)	Description of Work (Plan Sheet #, Unit Price #, Scope of Work #, as applicable)	% of Total Bid Price (2 decimal places; for example, 5.00%)	Cert. Type for Goal: MBE, WBE, or SBE	Certified Firm Name Firm Address Contact Name Phone No. and E-Mail
			MBE ☐ WBE ☐ SBE ☐	
			MBE ☐ WBE ☐ SBE ☐	
			MBE ☐ WBE ☐ SBE ☐	
			MBE ☐ WBE ☐ SBE ☐	
			MBE ☐ WBE ☐ SBE ☐	
			MBE ☐ WBE ☐ SBE ☐	
			MBE ☐ WBE ☐ SBE ☐	

Bidder's Participation Plan Total	MBE	WBE	SBE

Signature for Company: _____*

Printed Name: _____

Company Name: _____

Phone #: _____

Date: _____

*I understand that supplying inaccurate information may violate Texas Penal Code Section 37.10 and lead to City sanctions.

Document 00470

CONTINUATION PAGE

NAICS Code (6 digit)	Description of Work (Plan Sheet #, Unit Price #, Scope of Work #, as applicable)	% of Total Bid Price (2 decimal places; for example, 5.00%)	Cert. Type for Goal MBE, WBE, or SBE	Certified Firm Name Firm Address Contact Name Phone No. and E-Mail
			MBE ☐ WBE ☐ SBE ☐	
			MBE ☐ WBE ☐ SBE ☐	
			MBE ☐ WBE ☐ SBE ☐	
			MBE ☐ WBE ☐ SBE ☐	
			MBE ☐ WBE ☐ SBE ☐	
			MBE ☐ WBE ☐ SBE ☐	
			MBE ☐ WBE ☐ SBE ☐	
			MBE ☐ WBE ☐ SBE ☐	
			MBE ☐ WBE ☐ SBE ☐	
			MBE ☐ WBE ☐ SBE ☐	
			MBE ☐ WBE ☐ SBE ☐	
			MBE ☐ WBE ☐ SBE ☐	

Signature for Company: _____* Date: _____

Print Name/Company Name:_____ Phone: _____

*I understand that supplying inaccurate information may violate Texas Penal Code Section 37.10 and lead to City sanctions.

Document 00471

PRE-BID GOOD FAITH EFFORTS

Bidder Name: _____ **Project Name**_____

A Bidder or Proposer that may be unable to complete or follow a Participation Plan (Document 00470) to meet the Contract Goal in the Supplemental Conditions (Document 00800), must submit this completed form, Goal Deviation Request Form (Document 00472), providing supporting documentation evidencing their "Good Faith Efforts", as required by the City of Houston's Good Faith Efforts Policy (see Document 00808).

The Bidder or Prime Contractor has the burden to demonstrate "Good Faith Efforts" to meet the MWSBE goal, which includes correctly and accurately preparing and submitting this form and other efforts described in the City's Good Faith Efforts Policy (Document 00808). The Office of Business Opportunity will review Good Faith Efforts and Participation Plan after selection of an apparent low bidder.

UNLESS THE BIDDER'S/PROPOSER'S PARTICIPATION PLAN MEETS THE CONTRACT GOAL, FAILURE TO SUBMIT THIS FORM MAY RESULT IN THE BID BEING FOUND NON-RESPONSIVE.

NAICS Code	Plan Item No.	MWSBE Type for Goal	Certified Firm Name Address, Phone No., and E-Mail	Certified Firm Contact Person	Methods of Contact	Prime Contact Dates	Certified Firm Response	Results of Contact (why suitable or not suitable for work)
		MBE ☐ WBE ☐ SBE ☐			Phone ☐ E-mail ☐ Fax ☐			
		MBE ☐ WBE ☐ SBE ☐			Phone ☐ E-mail ☐ Fax ☐			
		MBE ☐ WBE ☐ SBE ☐			Phone ☐ E-mail ☐ Fax ☐			
		MBE ☐ WBE ☐ SBE ☐			Phone ☐ E-mail ☐ Fax ☐			

Authorized Signature: _____ Date: _____ Phone: _____

Print Name: _____ Email Address: _____

Company Name: _____

CONTINUATION PAGE

NAICS Code	Plan Item No.	MWSBE Type for Goal	Certified Firm Name Address, Phone No., and E-Mail	Certified Firm Contact Person	Method of Contact	Prime Contact Dates	Certified Firm Respons e	Results of Contact (why suitable or not suitable for work)
		MBE ☐ WBE ☐ SBE ☐			Phone ☐ E-mail ☐ Fax ☐			
		MBE ☐ WBE ☐ SBE ☐			Phone ☐ E-mail ☐ Fax ☐			
		MBE ☐ WBE ☐ SBE ☐			Phone ☐ E-mail ☐ Fax ☐			
		MBE ☐ WBE ☐ SBE ☐			Phone ☐ E-mail ☐ Fax ☐			
		MBE ☐ WBE ☐ SBE ☐			Phone ☐ E-mail ☐ Fax ☐			
		MBE ☐ WBE ☐ SBE ☐			Phone ☐ E-mail ☐ Fax ☐			
		MBE ☐ WBE ☐ SBE ☐			Phone ☐ E-mail ☐ Fax ☐			

Authorized Signature: _____ Date: _____ Phone: _____

Print Name: _____ Email Address: _____

Company Name: _____

Document 00472
BIDDER'S MWSBE GOAL DEVIATION REQUEST

Company Name: _____

Project Name: _____

	MBE	WBE	Total
Department Approved Contract Goals	%	%	%

	MBE	WBE	SBE (Max 4% for Credit)	Total
Bidder's Proposed Participation Plan	%	%	%	%

Justification: Please provide the reason the Bidder is unable to meet the Contract Goal in Document 00800.

_____

_____

_____

Good Faith Efforts: Please list any efforts not listed in the Bidder's Pre-Bid Good Faith Effort (Document 00471) and provide supporting documentation evidencing "Good Faith Efforts", as required by the City of Houston's Good Faith Efforts Policy (Document 808).

_____

_____

_____

_____

Date: _____ Company Name: _____
Email: _____ Company Representative: _____
Phone Number: _____ Title: _____

FOR OFFICIAL USE ONLY: Approved [ ] Not Approved [ ]

OBO Representative _____ Date: _____

_____ Title: _____

Document 00495

POST-BID PROCEDURES

3.0 DOCUMENT ADDRESSES

A. Notice of Intent to Award

B. Monitoring Authority/Contracting Department

C. Requirements of Bidder

D. Failure of Bidder to comply with requirements

E. Notice to Proceed

4.0 NOTICE OF INTENT TO AWARD

A. The City will provide written Notice of Intent to Award to Low Bidder.

5.0 DEFINITIONS

A. The "Monitoring Authority" or "OBO" for this Project is:

Director, Office of Business Opportunity Division
City of Houston
611 Walker Street, 7th Floor
Houston, Texas 77002

B. The "Contracting Department" for this Project is:
Director, Department of DEPARTMENT OF PUBLIC WORKS AND ENGINEERING
City of Houston
611 Walker Street
Houston, Texas 77002
ATTN: **Tina Yao, P.E.,**

6.0 REQUIREMENTS OF BIDDER

A. Within10 days of receipt of Notice of Intent to Award, Low Bidder shall execute and deliver to Tina Yao, P.E., Project Manager and Monitoring Authority, for the City's approval, documents indicated by an "X" below:
[ ] Document 00570 – Revised MWSBE Participation Plan *(Do not submit if OBO Director approved Bidder's Plan – Document 00470)*

[X] Executed Subcontract(s), Letter(s) of Intent, or documentation of good faith efforts to meet the MWSBE goals

B. Within 10 days of receipt of Notice of Intent to Award, Low Bidder shall execute and deliver to Tina Yao, P.E., Project Manager for the City's approval, documents indicated by an "X" below:

[ ] Document 00500 - Form of Business
[X] Document 00501 - Resolution of Contractor
[X] Document 00520 - Agreement
[X] Document 00600 - List of Proposed Subcontractors and Suppliers
[X] Document 00601 - Drug Policy Compliance Agreement
[X] Document 00602 - Contractor's Drug-free Workplace Policy *(Contractor creates this document.)*
[X] Document 00604 - History of OSHA Actions and List of On-the-job Injuries
[X] Document 00605 - List of Safety Impact Positions *(Contractor completes this list. Do not submit if submitting Document 00606.)*
[ ] Document 00606 - Contractor's Certification of No Safety Impact Positions *(Do not submit if submitting Document 00605.)*
[ ] Document 00607 - Certification Regarding Debarment, Suspension, and Other Responsibility Matters
[ ] Document 00608 - Contractor's Certification Regarding Non-segregated Facilities for Project Funded by AIP Grant
[X] Document 00610 - Performance Bond
[X] Document 00611 - Statutory Payment Bond
[X] Document 00612 - One-year Maintenance Bond
[ ] Document 00613 - One-year Surface Correction Bond
[X] Document 00620 - Affidavit of Insurance *(with Certificate of Insurance attached)*
[X] Document 00622 - Name and Qualifications of Proposed Superintendent *(Contractor creates this document.)*
[ ] Document 00623 - Contractor's Act of Assurance (SRF Form ED-103)
[X] Document 00624 - Affidavit of Compliance with S/WMBE Program
[ ] Document 00625 - SRF Participation Summary
[ ] Document 00626 - SRF Affirmative Steps Solicitation Report
[ ] Document 00627 - SRF Prime Contractor Affirmative Steps Certification and Goals
[ ] Document 00629 - Affidavit for FAA Form 7460-1
[X] Document 00630 - Certification of Compliance with Pay or Play Program
[X] Document 00631 - City of Houston Pay or Play Program – List of Subcontractors
[ ] Document 00809 – CDBG Requirements for Federally Funded Projects

C. Within 10 days of receipt of Notice of Intent to Award, Low Bidder shall execute the following forms and deliver them directly to the Monitoring Authority.

1. Original forms contained in Document 00805 – Equal Employment Opportunity Program Requirements:
   [X] Pages 00805-3 to 00805-5, Certification by Bidder Regarding Equal

Employment Opportunity

[X] *Page 00805-6, Total Work Force Composition of the Company, or copy of latest EEO-1 form (required only if Contractor has a work force of 50 or more people and the Original Contract Price is $50,000 or more)*

[X] *Page 00805-7, Equal Employment Opportunity Compliance Program*

[X] *Page 00805-26, Certification by Proposed Subcontractor Regarding Equal Employment Opportunity*

[X] *Page 00805-29, Certification by Proposed Material Supplier, Lessor, and Professional Service Providers Regarding Equal Employment Opportunity*

2. Original completed form Document 00633 - Certification by Proposed Material Suppliers, Lessors, and Professional Service Providers Regarding Equal Employment Opportunity, for each proposed material supplier and equipment supplier.

3. Original forms contained in Document 00820 – Wage Scale for Engineering Construction.

[X] *Certificate from Contractor Appointing Officer or Employee to Supervise Payment of Employees*

[ ] *Certificate from SubContractor Appointing Officer or Employee to Supervise Payment of Employees*

[ ] Document 00812, Exhibit "A" – Certificate from Contractor Appointing Officer or Employee to Supervise Payment of Employees

D. Designations of Subcontractors and Suppliers, who have been selected by Bidder in Document 00600 - List of Proposed Subcontractors and Suppliers, and accepted by the City, may be changed only with prior notice and acceptance by Project Manager as provided in Conditions of the Contract. For each Product Supplier subsequently added or substituted, provide an original completed form, Document 00633 - Certification by Proposed Material Suppliers, Lessors, and Professional Service Providers Regarding Equal Employment Opportunity, directly to the Monitoring Authority.

E. On Bidder's written request, Tina Yao, P.E., Project Manager may grant an extension of time, not to exceed 5 days, to furnish documents specified in Paragraphs 4.0.A and 4.0.B. If Bidder is required to resubmit documents specified in Paragraph 4.0.A or 4.0.B, Bidder shall do so within time limits provided in the request for resubmission.

F. Designations of Subcontractors and Suppliers, who have been selected by Bidder in its Participation Plan, and accepted by the City, may be changed only with prior notice and acceptance by the Monitoring Authority as provided in Document 00808 – Bidder/Contractor Requirements for the City of Houston Minority, Women, and Small Business Enterprise (MWSBE), and Persons with Disabilities Business Enterprise (PDBE).

5.0 FAILURE OF BIDDER TO COMPLY WITH REQUIREMENTS

A. Should Bidder, on receipt of Notice of Intent to Award, fail to comply with requirements of this Document 00495 within stated time, the City may declare award in default and require forfeiture of the Security Deposit.

B. After the City's written notice of default to Low Bidder, the City may award the Contract to Bidder whose offer is the next lowest bid, and Security Deposit of Bidder in default shall be forfeited to the City in accordance with provisions of Document 00200 - Instructions to Bidders.

6.0 NOTICE TO PROCEED

A. Upon the City's execution of the Agreement and delivery to Contractor, City Engineer will give Document 00551 - Notice to Proceed to Contractor, which establishes Date of Commencement of the Work.

END OF DOCUMENT

Document 00501

RESOLUTION OF CONTRACTOR

_____ ("Contractor"),
(Name of Contractor, e.g., "Biz. Inc.", "Biz LLP")

is a _____,
(Type of Organization, e.g.: Corporation, Limited Partnership, Limited Liability Partnership, Limited Liability Company, etc.)

which is bound by acts of _____,
(Name and Form of Governing Entity, e.g., "Biz Inc. Board of Directors", "Bill Smith, GP", etc.)

("Governing Entity").

On the _____ day of _____, 20___, the Governing Entity resolved, in accordance with all documents, rules, and laws applicable to the Contractor, that

_____, is authorized to act as the
(Contractor's Representative)

Contractor's Representative in all business transactions (initial one) ____ conducted in the State of Texas OR ____ related to this Contract; and

The Governing Entity warrants that the above resolution (a) was entered into without dissent or reservation by the Governing Entity, (b) has not been rescinded or amended, and (c) is now in full force and effect; and

In authentication of the adoption of this resolution, I subscribe my name on this day of _____, 20___.

_____ _____
(Authorized Signature for Governing Entity) (Print or Type Name and Title of Authorized Signatory)

SWORN AND SUBSCRIBED before me on _____
Date

_____
Notary Public in and for the State of Texas

My Commission Expires: _____ _____
Expiration Date Print or Type Name of Notary Public

Document 00520

AGREEMENT

Project: Rehabilitation of Distribution Pumps, Motors, Valves, Piping and Pump Station Buildings at Various Facilities – Package B

Project Location: Park Ten Central – 6910 Langham Creek; West Houston #3 – 14925 South Richmond Avenue; District 111 #2 – 10301 Sun City Court; Sharpstown #1 – 6910 Bintliff Drive.(Key Map No. 447 Y, 487 Z, 528 V, 530 H)

Project No: WBS No. S-001000-0046-4

The City: THE CITY OF HOUSTON, 900 Bagby Street, Houston, Texas 77002 (the "City")

and

Contractor: _____

(Address for Written Notice) _____

_____

Fax Number: _____ **Phone Number:** _____

City Engineer, with respect to Sections 4.3 thru 4.5 of the General Conditions, is:

J. Timothy Lincoln, P.E. (or his successor)

P. O. Box 1562, Houston, Texas 77251-1562 (Address for Written Notice)

City Engineer, with respect to all other terms of the General Conditions, is:

Joseph T. Myers, P.E. (or his successor)

Fax Number: (832) 395-2410

THE CITY AND CONTRACTOR AGREE AS FOLLOWS:

ARTICLE 1
THE WORK OF THE CONTRACT

1.1 Contractor shall perform the Work in accordance with the Contract.

ARTICLE 2
CONTRACT TIME

2.1 Contractor shall achieve Date of Substantial Completion within **550** days after Date of Commencement of the Work, subject to adjustments of Contract Time as provided in the Contract.

2.2 The Parties recognize that time is of the essence for this Agreement and that the City will suffer financial loss if the Work is not completed within the Contract Time. Parties also recognize delays, expense,

and difficulties involved in proving in a legal or arbitration proceeding actual loss suffered by the City if the Work is not completed on time. Accordingly, instead of requiring any such proof, the Parties agree that as liquidated damages for delay (but not as a penalty), Contractor shall pay the City the amount stipulated in Document 00800 – Supplementary Conditions, for each day beyond Contract Time.

ARTICLE 3
CONTRACT PRICE

3.1 Subject to terms of the Contract, the City will pay Contractor in current funds for Contractor's performance of the Contract, Contract Price of $_____ which includes Alternates, if any, accepted below.

3.2 The City accepts Alternates as follows:

****
Delete or add lines below to indicate all Alternates that were included in Request for competative sealed proposals. Remove brackets and instructions when done. Change color of remaining text to black.
****

Alternate No. 1 ___[*Accepted or Not Accepted*]_____
Alternate No. 2 ___[*Accepted or Not Accepted*]_____
Alternate No. 3 ___[*Accepted or Not Accepted*]_____
Alternate No. 4 ___[*Accepted or Not Accepted*]_____

ARTICLE 4
PAYMENTS

4.1 The City will make progress payments to Contractor as provided below and in Conditions of the Contract.

4.2 The Period covered by each progress payment is one calendar month ending on the [___] 15th or [___] last day of the month.

4.3 The City will issue Certificates for Payment and will make progress payments on the basis of such Certificates as provided in Conditions of the Contract.

4.4 Final payment, constituting entire unpaid balance of Contract Price, will be made by the City to Contractor as provided in Conditions of the Contract.

ARTICLE 5
CONTRACTOR REPRESENTATIONS

5.1 Contractor represents:

5.1.1 Contractor has examined and carefully studied Contract documents and other related data identified in Request For or Competitive Sealed Proposals or Competitive Sealed Bids.

5.1.2 Contractor has visited the site and become familiar with and is satisfied as to general, local, and site conditions that may affect cost, progress, and performance of the Work.

5.1.3 Contractor is familiar with and is satisfied as to all federal, state, and local laws and regulations that may affect cost, progress, and performance of the Work.

5.1.4 Contractor has carefully studied all: (1) reports of explorations and tests of subsurface conditions at or contiguous to the site and all drawings of physical conditions in or relating to existing surface or subsurface structures at or contiguous to the site (except Underground Facilities) which have been identified in Contract documents and (2) reports and drawings of a hazardous environmental condition, if any, at the site which has been identified in Contract documents.

5.1.5 Contractor has obtained and carefully studied (or assumes responsibility for having done so) all additional or supplementary examinations, investigations, explorations, tests, studies, and data concerning conditions (surface, subsurface, and Underground Facilities) at or contiguous to the site which may affect cost, progress, or performance of the Work or which relate to any aspect of the means, methods, techniques, sequences, and procedures of construction to be employed by Contractor, including applying specific means, methods, techniques, sequences, and procedures of construction, if any, expressly required by the Contract to be employed by Contractor, and safety precautions and programs incident thereto

5.1.6 Contractor does not consider that any further examinations, investigations, explorations, tests, studies, or data are necessary for performance of the Work at Contract Price, within Contract Time, and in accordance with the Contract.

5.1.7 Contractor is aware of general nature of work to be performed by the City and others at the site that relates to the Work as indicated in Contract documents.

5.1.8 Contractor has correlated information known to Contractor, information and observations obtained from visits to the site, reports and drawings identified in the Contract, and all additional examinations, investigations, explorations, tests, studies, and data with the Contract.

5.1.9 Contractor has given City Engineer written notice of all conflicts, errors, ambiguities, or discrepancies that Contractor has discovered in the Contract, and written resolution thereof by City Engineer is acceptable to Contractor.

5.1.10 Contract documents are generally sufficient to indicate and convey understanding of all terms and conditions for performance and furnishing of the Work.

ARTICLE 6
MISCELLANEOUS PROVISIONS

6.1 The Contract may be terminated by either Party as provided in Conditions of the Contract.

6.2 The Work may be suspended by the City as provided in Conditions of the Contract.

ARTICLE 7
ENUMERATION OF CONTRACT DOCUMENTS

7.1 The following documents are incorporated into this Agreement:

7.1.1 Document 00700 - General Conditions.

7.1.2 Document 00800 - Supplementary Conditions.

7.1.3 Division 01 - General Requirements.

7.1.4 Divisions 02 through 16 of Specifications.

7.1.5 Drawings listed in Document 00015 - List of Drawings. Drawing No. None and bound separately.

7.1.6 Addenda [and Riders] which apply to the Contract, are as follows:

Addendum No. 1, dated None

Addendum No. 2, dated None

Addendum No. 3, dated None

Rider No. [___], dated None

7.1.7 Other documents:

	Document No.	Title
[X]	00410B	Bid Form – Part B
[X]	00470	Standard Pre-Bid Participation Plan Document
[ ]	00471	Pre-Bid Good Faith Efforts Report
[ ]	00472	Goal Deviation Request
[ ]	00500	Form of Business
[X]	00501	Resolution of Contractor (if a corporation)
[ ]	00570	Amended S/MWBE Participation Plan
[ ]	00571	Contractor's Good Faith Efforts Report
[ ]	00572	Plan Deviation Request
[ ]	00608	Contractor's Certification Regarding Non-Segregated Facilities for Project Funded by AIP Grant
[X]	00610	Performance Bond
[X]	00611	Statutory Payment Bond
[X]	00612	One-year Maintenance Bond
[ ]	00613	One-year Surface Correction Bond
[X]	00620	Affidavit of Insurance (with the Certificate of Insurance attached)
[ ]	00623	Contractor's Act of Assurance (SRF Form ED-103)
[X]	00624	Affidavit of Compliance with Affirmative Action Program
[ ]	00628	Affidavit of Compliance with Disadvantaged Business Enterprise (DBE) Program for Project Funded By AIP Grant
[X]	00630	(POP-2) Certification of Compliance with Pay or Play Program
[X]	00631	(POP-3) City of Houston Pay or Play Program – List of Subcontractors
[X]	00800	Supplementary Conditions for Project CIP or AIP Funded
[ ]	00801	Supplementary Conditions for Project AIP Funded
[ ]	00802	SRF Supplementary Conditions
[X]	00805	Equal Employment Opportunity Program Requirements
[ ]	00806	EPA DBE and Wage Rate Requirements (SRF only)
[ ]	00807	Bidder/Contractor Requirements for DBE Program
[X]	00808	Minority and Women-owned Business Enterprise (MWBE) & Persons with Disabilities Business Enterprise (PDBE) Program

[ ]	00810	Federal Wage Rate - Highway
[ ]	00811	Federal Wage Rate - Building
[ ]	00812	Federal Wage Rate - Heavy
[X]	00820	Wage Rate for Engineering Construction
[X]	00821	Wage Rate for Building Construction
[ ]	00830	Trench Safety Geotechnical Information
[X]	00840	Pay or Play Program
[ ]	00912	Rider

ARTICLE 8
SIGNATURES

8.1 This Agreement is executed in two original copies and is effective as of the date of countersignature by City Controller.

CONTRACTOR:

By: _____

Name: _____

Title: _____

Date: _____

Tax Identification Number: _____

(If Joint Venture)

By: _____

Name: _____

Title: _____

Date: _____

Tax Identification Number: _____

CITY OF HOUSTON, TEXAS

APPROVED:

By: _____
Director,
Department of Public Works and Engineering

SIGNED:

By: _____
Mayor

COUNTERSIGNED:

By: _____
City Controller

Date Countersigned:

_____

ATTEST/SEAL:

By: _____
City Secretary

8.2 This Contract and Ordinance have been reviewed as to form by the undersigned legal assistant and have been found to meet established Legal Department criteria. Legal Department has not reviewed the content of these documents.

_____
Legal Assistant

_____
Date

END OF DOCUMENT

Document 00570

CONTRACTOR'S REVISED MWSBE PARTICIPATION PLAN

As soon as the Contractor becomes aware that the Contractor may not abide by the most current approved Plan, the Contractor shall submit this completed form with a Record of Post-Bid Good Faith Efforts (Document 00571), a Request for Plan Deviation (Document 00572), and any other document evidencing "Good Faith Efforts", as required by the Good Faith Efforts Policy (Document 00808). The City will review this Revised Participation Plan and may approve this Revised Plan if the Contractor has made Good Faith Efforts. For more information, visit http://www.houstontx.gov/obo.

Original Participation Plan Percentage	MBE	WBE	SBE	Revised Participation Plan Percentage	MBE	WBE	SBE

NAICS Code (6 digit)	Description of Work (Plan Sheet #, Unit Price #, Scope of Work #, as applicable)	% of Total Bid Price (2 decimal places)	Cert. Type for Goal (MBE, WBE, SBE)	Certified Firm Name Firm Address Contact Name Phone No. and E-Mail (if available)

Signature for Company: _____* Date: _____
Print Name: _____ Phone: _____

*I understand that supplying inaccurate information may violate Texas Penal Code Section 37.10 and lead to City sanctions.

Document 00570

CONTINUATION PAGE

NAICS Code (6 digit)	Plan Item Number (if applicable)/ Description of Work	% of Total Bid Price (2 decimal places)	Cert. Type for Goal (MBE, WBE, SBE)	Certified Firm Name Firm Address Contact Name Phone No. and E-Mail (if available)

Signature for Company: _____* Date: _____
Print Name: _____ Phone: _____

* understand that supplying inaccurate information may violate Texas Penal Code Section 37.10 and lead to City sanctions.

Document 00571

RECORD OF POST-AWARD GOOD FAITH EFFORTS

Contractor Name: _____ **Project Name:**_____

A Contractor that may be unable to follow an agreed Participation Plan (Document 00470 or 00570) must submit this completed form, a Plan Deviation Request Form (Document 00572), and any other documentation of "Good Faith Efforts" (see Document 00808) that the OBO Representative may require. The Contractor shall submit one completed Document 00571 (Part A) for each Certified Firm that is no longer performing part or all of its work duties under the Approved Plan. The Contractor has the burden to demonstrate "Good Faith Efforts" to meet the MWSBE goal, which includes correctly and accurately preparing and submitting this form and other efforts described in the Good Faith Efforts Policy (Document 00808). The Office of Business Opportunity may review Participation Plan and Good Faith Efforts from time to time and may request that the Contractor submit this form and other information.

UNLESS THE CONTRACTOR MEETS THE GOALS IN THE AGREED PARTICIPATION PLAN, FAILURE TO SUBMIT THIS FORM MAY RESULT IN A DEFAULT OF THE CONTRACT.

PART A (REASON FOR NON-USE OF CERTIFIED FIRM IN AGREED PLAN)

NAICS Code	Plan Item No.	MWSBE Type for Goal	Certified Firm Name, Address, Phone No. and E-mail	Plan Goal & Actual Use (in % of total)	Method of Contact	Reason for Non-Use (why the Contractor was not able to use the Certified Firm in accordance with the Agreed Plan)
				Plan %: ____ Actual %: ____	Phone ☐ E-mail ☐ Fax ☐	

PART B (REASON FOR NONUSE OF REPLACEMENT CERTIFIED FIRMS—IF APPLICABLE)

NAICS Code	Plan Item No.	MWSBE Type for Goal	Certified Firm Name Address, Phone No. and E-Mail	Certified Firm Contact Person	Method of Contact	Prime Contact Date	Certified Firm Response	Results of Contact (why Certified Firm was unsuitable or unusable)
					Phone ☐ E-mail ☐ Fax ☐			
					Phone ☐ E-mail ☐ Fax ☐			

Authorized Signature: _____ Date: _____ Phone: _____

Print Name: _____ Email Address: _____

Document 00571

PART B CONTINUATION (REASON FOR NONUSE OF REPLACEMENT CERTIFIED FIRMS)

NAICS Code	Plan Item No.	MWSBE Type for Goal	Certified Firm Name Address, Phone No. and E-Mail	Certified Firm Contact Person	Method of Contact	Prime Contact Date	Certified Firm Response	Results of Contact (why Certified Firm was unsuitable or unusable)
					Phone ☐ E-mail ☐ Fax ☐			
					Phone ☐ E-mail ☐ Fax ☐			
					Phone ☐ E-mail ☐ Fax ☐			
					Phone ☐ E-mail ☐ Fax ☐			
					Phone ☐ E-mail ☐ Fax ☐			
					Phone ☐ E-mail ☐ Fax ☐			
					Phone ☐ E-mail ☐ Fax ☐			
					Phone ☐ E-mail ☐ Fax ☐			

Authorized Signature: _____ Date: _____ Phone: _____

Print Name: _____ Email Address: _____

Document 00572

CONTRACTOR'S REQUEST FOR PLAN DEVIATION

Contractor Name:_____

Project Name:_____

	MBE	WBE	SBE	Total
Approved Participation Plan Percentages	%	%	%	%

	MBE	WBE	SBE	Total
Contractor's Requested Participation Plan	%	%	%	%

Justification: Please provide the reason the Contractor is unable to meet the MWSBE goal in the Approved Plan.

_____

_____

_____

Good Faith Efforts: Please list any efforts not listed in Contractor's Record of Good Faith Effort (Document 00571).

_____

_____

_____

_____

Please attach additional pages if the space for Justification or Good Faith Efforts is insufficient.

Date:_____ *Contractor:_____

E-mail: _____ *By:_____

Phone Number: _____ Title:_____

*I understand that the approval of this deviation request does not constitute a final decision by OBO that Contractor has used Good Faith Efforts in meeting the Contracting Goal.

FOR OFFICIAL USE ONLY: Approved ☐ Not Approved ☐

OBO Representative Date:_____

_____ Title: _____

Document 00600

LIST OF PROPOSED SUBCONTRACTORS AND SUPPLIERS

PROJECT NAME: Rehabilitation of Distribution Pumps, Motors, Valves, Piping and Pump Station Buildings at Various Facilities – Package B
ORIG. CONTRACT PRICE: $_____
PROJECT NO.: WBS No. S-001000-0046-4
DATE OF REPORT: _____

TOTAL DBE AWARD: $ _____
TOTAL MWSBE AWARD: $ _____
TOTAL HUB AWARD: $ _____
TOTAL PDBE AWARD: $ _____

NAICS (6 digits)	**SUBCONTRACTOR OR SUPPLIER (INCLUDE "MWSBE", "PDBE", "DBE", OR "HUB" DESIGNATION)**[2]	**ADDRESS**	**SCOPE OF WORK**[3]

NOTES:
1. RETURN FOR ALL PROJECTS AS REQUIRED IN DOCUMENT 00800 – SUPPLEMENTARY CONDITIONS. RETURN WITHIN THE SPECIFIED NUMBER OF DAYS AFTER RECEIPT OF NOTICE OF INTENT TO AWARD
2. DESIGNATE FIRMS CERTIFIED BY THE CITY OFFICE OF BUSINESS OPPORTUNITY ON THIS FORM.
3. DESCRIBE THE WORK TO BE PERFORMED, FOR WHICH THE FIRM IS CERTIFIED, SUCH AS "PAVING", "ELECTRICAL", ETC.
4. **CONTRACTOR SHALL EXECUTE CONTRACTS WITH APPROVED SUBCONTRACTORS AND SUPPLIERS WITHIN 30 DAYS AFTER THE DATE OF THE NOTICE TO PROCEED. COPIES OF CONTRACTS WITH DESIGNNATED FIRMS MUST BE SENT TO THE OFFICE OF BUSINESS OPPORTUNITY.**

SIGNATURE: _____ COMPANY NAME: _____

NAME: _____ TITLE: _____
(Type or Print)

Document 00600

Continuation Page

PROJECT NAME: Rehabilitation of Distribution Pumps, Motors, Valves, Piping and Pump Station Buildings at Various Facilities – Package B
DATE OF REPORT: _____
PROJECT NO.: WBS No. S-001000-0046-4

NAICS (6 digits)	**SUBCONTRACTOR OR SUPPLIER (INCLUDE "MWSBE", "PDBE", "DBE", OR "HUB" DESIGNATION)**[2]	**ADDRESS**	**SCOPE OF WORK**[3]

SIGNATURE: _____ COMPANY NAME: _____

NAME: _____ TITLE: _____
(Type or Print)

END OF DOCUMENT

Document 00601

DRUG POLICY COMPLIANCE AGREEMENT

I, _____ _____,
Name Title

of _____
Contractor

have authority to bind Contractor with respect to its Bid, Proposal, or performance of any and all contracts it may enter into with the City of Houston; and that by making this Agreement, I affirm that Contractor is aware of and by the time the Contract is awarded will be bound by and agree to designate appropriate safety impact positions for company employee positions, and to comply with the following requirements before the City issues a Notice to Proceed:

1. Develop and implement a written Drug Free Workplace Policy and related drug testing procedures for Contractor that meet the criteria and requirements established by the Mayor's Amended Policy on Drug Detection and Deterrence (Mayor's Drug Policy) and the Mayor's Drug Detection and Deterrence Procedures for Contractors (Executive Order No. 1-31).

2. Obtain a facility to collect urine samples consistent with Health and Human Services (HHS) guidelines and an HHS-certified drug-testing laboratory to perform drug tests.

3. Monitor and keep records of drug tests given and results; and upon request from the City of Houston, provide confirmation of such testing and results.

4. Submit semi-annual Drug Policy Compliance Declarations.

I affirm on behalf of Contractor that full compliance with the Mayor's Drug Policy and Executive Order No. 1-31 is a material condition of the Contract with the City of Houston,

I further acknowledge that falsification, failure to comply with or failure to timely submit declarations or documentation in compliance with the Mayor's Drug Policy or Executive Order No. 1-31 will be considered a breach of the Contract with the City and may result in non-award or termination of the Contract by the City.

_____ _____
Contractor Title

_____ _____
Signature Date

END OF DOCUMENT

Document 00604

HISTORY OF OSHA ACTIONS AND LIST OF ON-THE-JOB INJURIES

Prior to award of the Contract, Low Bidder will be required to file the following with the City:

1. A history of all OSHA actions, advisories, etc., Contractor has received on all jobs worked in any capacity, prime or subcontractor. The history shall be for the two-year period preceding the Bid Date of the Project.

2. A list of all on-the-job injuries, accidents, and fatalities suffered by any present or former employees of Contractor during the same two-year period.

3. If less than the two-year period, give the date Contractor started doing business.

This information must be submitted to the City within the time period stated in Document 00498 - Notice of Intent to Award. An officer of the company must certify in a notarized statement that the information submitted is true and correct.

END OF DOCUMENT

Document 00605

LIST OF SAFETY IMPACT POSITIONS

****

Contractor is to provide a complete List of Employee Classifications that are considered in a "Safety Impact Position" and the number of employees in each of those classifications.

****

Employee Classification	**Number of Employees**

END OF DOCUMENT

Document 00606

CONTRACTOR'S CERTIFICATION OF
NO SAFETY IMPACT POSITIONS IN PERFORMANCE OF A CITY CONTRACT

BEFORE ME, the undersigned authority, on this day personally appeared

_____,
Affiant

who being by me duly sworn on his oath stated that he is _____
Title

of _____
Contractor

and that no employee safety impact positions, as defined in §5.17 of Executive Order No. 1-31, will be involved in performing _____.
Project

Contractor agrees and covenants that it shall immediately notify the City of Houston Director of Personnel if any safety impact positions are established to provide services in performing this City Contract.

_____
Affiant's Signature

SWORN AND SUBSCRIBED before me on this day of _____, 20__.

_____
Notary Public in and for the State of TEXAS

_____
Print or Type Notary Public Name

My Commission Expires: _____
Expiration Date

END OF DOCUMENT

Document 00610

PERFORMANCE BOND

THAT WE, _____, as Principal, (the "Contractor"), and the other subscriber hereto, _____, as Surety, do hereby acknowledge ourselves to be held and firmly bound to the City of Houston (the "City"), a municipal corporation, in the penal sum of $_____ for the payment of which sum, well and truly to be made to the City, its successors and assigns, Contractor and Surety do bind themselves, their heirs, executors, administrators, successors and assigns, jointly and severally.

THE CONDITIONS OF THIS OBLIGATION ARE SUCH THAT:

WHEREAS, the Contractor has on or about this day executed a Contract in writing with the City for _____
_____,
all of such work to be done as set out in full in said Contract documents therein referred to and adopted by the City Council, all of which are made a part of this instrument as fully and completely as if set out in full herein.

NOW THEREFORE, if the said Contractor shall faithfully and strictly perform the Contract in all its terms, provisions, and stipulations in accordance with its true meaning and effect, and in accordance with the Contract documents referred to therein and shall comply strictly with each and every provision of the Contract and with this Bond, then this obligation shall become null and void and shall have no further force and effect; otherwise the same is to remain in full force and effect. Should the Contractor fail to faithfully and strictly perform the Contract in all its terms, including but not limited to the indemnifications thereunder, the Surety shall be liable for all damages, losses, expenses and liabilities that the City may suffer in consequence thereof, as more fully set forth herein.

It is further understood and agreed that the Surety does hereby relieve the City or its representatives from the exercise of any diligence whatever in securing compliance on the part of the Contractor with the terms of the Contract, and the Surety agrees that it shall be bound to take notice of and shall be held to have knowledge of all acts or omissions of the Contractor in all matters pertaining to the Contract. The Surety understands and agrees that the provision in the Contract that the City will retain certain amounts due the Contractor until the expiration of 30 days from the acceptance of the Work is intended for the City's benefit, and the City will have the right to pay or withhold such retained amounts or any other amount owing under the Contract without changing or affecting the liability of the Surety hereon in any degree.

It is further expressly agreed by Surety that the City or its representatives are at liberty at any time, without notice to the Surety, to make any change in the Contract documents and in the Work to be done thereunder, as provided in the Contract, and in the terms and conditions thereof, or to make any change in, addition to, or deduction from the Work to be done thereunder; and that such changes, if made, shall not in any way vitiate the obligation in this Bond and undertaking or release the Surety therefrom.

It is further expressly agreed and understood that the Contractor and Surety will fully indemnify and save harmless the City from any liability, loss, cost, expense, or damage arising out of Contractor's performance of the Contract.

If the City gives Surety notice of Contractor's default, Surety shall, within 45 days, take one of the following actions:

1. Arrange for Contractor, with consent of the City, to perform and complete the Contract; or

2. Take over and assume completion of the Contract itself, through its agents or through independent contractors, and become entitled to the payment of the balance of the Contract Price.

If the Surety fails to take either of the actions set out above, it shall be deemed to have waived its right to perform and complete the Contract and receive payment of the balance of the Contract Price and the City shall be entitled to enforce any remedies available at law, including but not limited to completing the Contract itself and recovering any cost in excess of the Original Contract Price from the Surety.

This Bond and all obligations created hereunder shall be performable in Harris County, Texas. This Bond is given in compliance with the provisions of Chapter 2253, Texas Government Code, as amended, which is incorporated herein by this reference.

Notices required or permitted hereunder shall be in writing and shall be deemed delivered when actually received or, if earlier, on the third day following deposit in a United States Postal Service post office or receptacle, with proper postage affixed (certified mail, return receipt requested), addressed to the respective other Party at the address prescribed in the Contract documents, or at such other address as the receiving party may hereafter prescribe by written notice to the sending party.

IN WITNESS THEREOF, the said Contractor and Surety have signed and sealed this instrument on the respective dates written below their signatures and have attached current Power of Attorney.

ATTEST, SEAL: (if a corporation)
WITNESS: (if not a corporation)

_____
Name of Contractor

By: _____
Name:
Title:

By: _____
Name:
Title:
Date:

ATTEST/SURETY WITNESS:

(SEAL)

_____
Full Name of Surety

_____
Address of Surety for Notice

_____

_____
Telephone Number of Surety

By: _____
Name:
Title:
Date:

By: _____
Name:
Title: Attorney-in-Fact
Date:

This Ordinance or Contract has been reviewed as to form by the undersigned legal assistant and have been found to meet established Legal Department criteria. The Legal Department has not reviewed the content of these documents.

_____
Legal Assistant

_____
Date

END OF DOCUMENT

Document 00611

STATUTORY PAYMENT BOND

THAT WE, _____, as Principal, hereinafter called Contractor and the other subscriber hereto, _____, as Surety, do hereby acknowledge ourselves to be held and firmly bound unto the City of Houston, a municipal corporation, in the sum of $_____ for the payment of which sum, well and truly to be made to the City of Houston, and its successors, the said Contractor and Surety do bind themselves, their heirs, executors, administrators, successors, jointly and severally.

THE CONDITIONS OF THIS OBLIGATION ARE SUCH THAT:

WHEREAS, the Contractor has on or about this day executed a contract in writing with the City of Houston for _____
_____,
all of such work to be done as set out in full in said Contract documents therein referred to and adopted by the City Council, all of which are made a part of this instrument as fully and completely as if set out in full herein;

NOW, THEREFORE, if the said Contractor shall pay all claimants supplying labor and materials to him or a Subcontractor in the prosecution of the Work provided for in the Contract, then, this obligation shall be void; otherwise the same is to remain in full force and effect;

PROVIDED HOWEVER, that this Bond is executed pursuant to the provisions of Chapter 2253, Texas Government Code, as amended, and all liabilities on this Bond shall be determined in accordance with the provisions of said Article to the same extent as if it were copied at length herein.

IN WITNESS THEREOF, the said Contractor and Surety have signed and sealed this instrument on the respective dates written below their signatures and have attached current Power of Attorney.

ATTEST, SEAL: (if a corporation)
WITNESS: (if not a corporation)

_____
Name of Contractor

By: _____
Name:
Title:

By: _____
Name:
Title:
Date:

ATTEST/SURETY WITNESS:

(SEAL)

_____
Full Name of Surety

_____
Address of Surety for Notice

_____

_____
Telephone Number of Surety

By: _____
Name:
Title:
Date:

By: _____
Name:
Title: Attorney-in-Fact
Date:

This Ordinance or Contract has been reviewed as to form by the undersigned legal assistant and have been found to meet established Legal Department criteria. The Legal Department has not reviewed the content of these documents.

_____
Legal Assistant

_____
Date

END OF DOCUMENT

Document 00612

ONE-YEAR MAINTENANCE BOND

THAT WE, _____, as Principal, hereinafter called Contractor, and the other subscriber hereto, _____, as Surety, do hereby acknowledge ourselves to be held and firmly bound to the City of Houston, a municipal corporation, in the sum of $_____, for the payment of which sum well and truly to be made to the City of Houston and its successors, the said Contractor and Surety do bind themselves, their heirs, executors, administrators, successors, jointly and severally.

THE CONDITIONS OF THIS OBLIGATION ARE SUCH THAT:

WHEREAS, the Contractor has on or about this day executed a Contract in writing with the City of Houston for _____
_____,
all of such work to be done as set out in full in said Contract documents therein referred to and adopted by the City Council, all of which are made a part of this instrument as fully and completely as if set out in full herein.

NOW THEREFORE, if the said Contractor shall comply with the provisions of Paragraph 11.5.1 of the General Conditions, and correct work not in accordance with the Contract documents discovered within the established one-year period, then this obligation shall become null and void, and shall be of no further force and effect; otherwise, the same is to remain in full force and effect.

Notices required or permitted hereunder shall be in writing and shall be deemed delivered when actually received or, if earlier, on the third day following deposit in a United States Postal Service post office or receptacle, with proper postage affixed (certified mail, return receipt requested), addressed to the respective other party at the address prescribed in the Contract documents, or at such other address as the receiving party may hereafter prescribe by written notice to the sending party.

IN WITNESS THEREOF, the said Contractor and Surety have signed and sealed this instrument on the respective dates written below their signatures and have attached current Power of Attorney.

ATTEST, SEAL: (if a corporation)
WITNESS: (if not a corporation)

_____
Name of Contractor

By: _____
Name:
Title:

By: _____
Name:
Title:
Date:

ATTEST/SURETY WITNESS:

(SEAL)

_____
Full Name of Surety

_____
Address of Surety for Notice

_____

_____
Telephone Number of Surety

By: _____
Name:
Title:
Date:

By: _____
Name:
Title: Attorney-in-Fact
Date:

This Ordinance or Contract has been reviewed as to form by the undersigned legal assistant and have been found to meet established Legal Department criteria. The Legal Department has not reviewed the content of these documents.

_____
Legal Assistant

_____
Date

END OF DOCUMENT

Document 00620

AFFIDAVIT OF INSURANCE

BEFORE ME, the undersigned authority, on this day personally appeared

_____, who
Affiant

being by me duly sworn on his oath stated that he is _____, of
Title

_____,
Contractor's Company Name

the Contractor named and referred to within the Contract documents; that he is fully competent and authorized to give this affidavit and that the attached original insurance certificate truly and accurately reflects the insurance coverage that is now available and will be available during the term of the Contract.

_____
Affiant's Signature

SWORN AND SUBSCRIBED before me on _____.
Date

_____
Notary Public in and for the State of TEXAS

_____
Print or type Notary Public name

My Commission Expires: _____
Expiration Date

END OF DOCUMENT

Document 00624

AFFIDAVIT OF COMPLIANCE WITH
AFFIRMATIVE ACTION PROGRAM

BEFORE ME, the undersigned authority, on this day personally appeared

_____, who
Affiant

being by me duly sworn on his oath stated that he is _____,
Title

of _____,
Contractor

the Contractor named and referred to within the Contract documents; that he is fully competent and authorized to give this affidavit and that the Contract is in compliance with the Affirmative Action Program of the City and has done all that is required by the Contract documents, the Affirmative Action Program, and pursuant to Chapter 15, Code of Ordinances, City of Houston, §15.16 et seq.

_____
Affiant's Signature

SWORN AND SUBSCRIBED before me on this day of _____, 20__.

_____
Notary Public in and for the State of TEXAS

_____
Print or Type Notary Public Name

My Commission Expires: _____
Expiration

END OF DOCUMENT

Document 00630
(POP-2)
City of Houston
Certification of Compliance with
Pay or Play Program

Contractor Name: _____ $ _____
(Contractor/Subcontractor) *(Amount of Contract)*

Contractor Address: _____

Project No.: «WBSNo» _____

Project Name: «LegalPrjName» _____

POP Liaison Name: _____

In accordance with the City of Houston Pay or Play Program authorized by Ordinance 2007-534 and Executive Order 1-7, Contractor/Subcontractor agrees to abide by the terms of this Program. This certification is required of all contractors for contracts subject to the program. You must agree EITHER to PAY or to PLAY for all covered employees. The Contractor/Subcontractor may also Pay on behalf of some covered employees and Play on behalf of other covered employees.

The Contractor/Subcontractor will comply with all provisions of the Pay or Play Program and will furnish all information and reports requested to determine compliance with program requirements of the Pay or Play Program (See Executive Order 1-7 for the terms of the Pay or Play program) The criteria of the program is as follows:

The Contractor/Subcontractor agrees to **"Pay"** $1.00 per hour for work performed by covered employees under the contract with the City. If independent contract labor is utilized the Contractor/Subcontractor agrees to report hours worked by the independent contract laborer and pay $1.00 per hour for work performed.

Otherwise the Contractor/Subcontractor agrees to **"Play"** by providing health benefits to each covered employee. The health benefits must meet the following criteria:

1. The employer will contribute no less than $150 per employee per month toward the total premium cost for single coverage only; and
2. The employee contribution, if any amount, will be no greater than 50% of the total premium cost and no more than $150 per month.
3. Pursuant to E.O. 1-7 section 4.04 a contractor is deemed to have complied with respect to a covered employee who is not provided health benefits if the employee refuses the benefits and the employee's contribution to the premium is no more than $40 per month.

Please select whether you choose to:	Pay	Play	Both

The Contractor/Subcontractor will file compliance reports with the City, which will include activity for covered employees subject to the program, in the form and to the extent requested by the administering department. Compliance reports shall contain information including, but not limited to, documentation showing employee health coverage and employee work records.
Note: The Contractor is responsible to the City for the compliance of covered employees of covered subcontractors and only forms that are accurate and complete will be accepted.

*Estimated Number of:	Prime Contractor	Sub-Contractor
Total Employees on City Job		
Covered Employees		
Non-Covered Employees		
Exempt Employees		

***Required**

I hereby certify that the above information is true and correct.

_____ _____
Contractor ***(Signature)*** Date

_____
Name and Title ***(Print or type)***

Document 00631
(POP-3)
City of Houston
Pay or Play Program
List of Subcontractors

Prime Contractor: _____
Project Number/Description: _____

POP Contact Person: _____
Address: _____
Email: _____
Phone: _____

Note: Include ALL subcontractors (use additional form if necessary)

Subcontractor Name	Supplier Y/N?	Amount of Subcontract	Check One: Pay	Check One: Play	Check One: Both (Pay and Play)	Check One: N/A	Contact Person	Phone	Email Address	Mailing Address

*If the above information is found to be submitted fraudulently with the intent to bypass or deceive the purpose of the Pay or Play Program the contractor will be held liable for all compliance requirements from the inception of the contract. All subcontracts that surpass the $200,000.00 threshold will be responsible for Pay or Play compliance from the inception of the contract.

Affidavit

I hereby solemnly affirm, certify and confirm that the total sub-contract value stated above is the final value of the contract (*) including all material costs, fuel, payroll, taxes, fees, profit sharing, labor or any payments in relation to the contracted work and no separate payment or contract has been made for the sub-contract under contract no._____ . The above sub-contract value includes all the costs related to work under the contract. The contractor and sub-contractor(s) agree to inform The Mayor's Office of Business Opportunity of any related cost(s) added to the contracted work and re-submit POP-3 with the current value of the sub-contract. I understand that compliance with "Pay or Play" program is mandatory and nothing has been hidden to circumvent the program requirements.

_____
Contractor Authorized Representative & Title Date
Name & Signature

Document 00642

MONTHLY SUBCONTRACTOR PAYMENT REPORTING FORM

Legal Project Name:_____

Outline Agreement No.:_____ WBS No.:_____

Contractor's Company Name: _____

Address: _____

CERTIFICATION

_____, Contractor's Representative for the above referenced Contract, hereby certifies that (1) Contractor has paid all subcontractors, except those noted below, (2) Contractor made such payments (a) in proportion to the amount City paid Contractor and (b) in accordance and compliance with all applicable Contract Documents and laws; and (3) Contractor withheld no sums from any subcontractor for allegations of deficiency in Work. The term "subcontractor", as used herein, includes all persons or firms furnishing work, materials, services or equipment Contractor ordered incorporated into Work or placed near the Project for which the City made partial payment.

EXCEPTION: Contractor sent Payment Notifications to the following subcontractors explaining why Contractor withheld payment. Copies are attached.

Subcontractor Name:_____	Subcontractor Name: _____
Street Address: _____	Street Address: _____
City, State, and Zip Code: _____	City, State, and Zip Code: _____
Amount of Payment Withheld:_____	Amount of Payment Withheld: _____
Date Payment First Withheld: _____	Date Payment First Withheld: _____
Description of Good Faith Reason:_____	Description of Good Faith Reason:_____
_____	_____

_____
(Signature of Contractor's Representative)

_____
(Print or Type Name of Contractor's Representative)

SWORN TO AND SUBSCRIBED before me on:

_____
Date

_____
Notary Public in and for the State of Texas

My Commission Expires: _____
Expiration Date

_____
Print or Type Name of Notary Public

Document 00646

PAYMENT NOTIFICATION – EXPLANATION OF WITHHOLDING

Legal Project Name:_____

Outline Agreement No.:_____ WBS No.:_____

Contractor's Company Name: _____

Address: _____

Date: _____

SUBCONTRACTOR PAYMENT INFORMATION:

Subcontractor Name:_____

Street Address: _____

City, State, and Zip Code: _____

Business Phone Number: _____

Amount of Subcontractor Invoice: _____

Amount of Payment Made: _____

Amount of Payment Withheld:_____

Date Payment First Withheld: _____

DETAILED EXPLANATION OF WITHHOLDING: _____

_____

_____

_____

_____

_____ _____

(Signature of Contractor's Representative) (Print or Type Name of Contractor's Representative)

Document 00700

GENERAL CONDITIONS

August 15, 2015 EDITION

TABLE OF ARTICLES

1. GENERAL PROVISIONS
2. THE CITY
3. CONTRACTOR
4. ADMINISTRATION OF THE CONTRACT
5. SUBCONTRACTORS AND SUPPLIERS
6. CONSTRUCTION BY THE CITY OR BY SEPARATE CONTRACTORS
7. CHANGES IN THE WORK
8. TIME
9. PAYMENTS AND COMPLETION
10. SAFETY PRECAUTIONS
11. INSURANCE AND BONDS
12. UNCOVERING AND CORRECTION OF THE WORK
13. MISCELLANEOUS PROVISIONS
14. TERMINATION OR SUSPENSION OF THE CONTRACT

ARTICLE 1 - GENERAL PROVISIONS 3

1.1 DEFINITIONS 3
1.2 EXECUTION, CORRELATION, AND INTENT 5
1.3 OWNERSHIP AND USE OF DOCUMENTS 6
1.4 INTERPRETATION 6

ARTICLE 2 - THE CITY 6

2.1 LIMITATIONS OF THE CITY'S OFFICERS AND EMPLOYEES 6
2.2 DUTIES OF THE CITY 6
2.3 AVAILABILITY OF LAND AND USE OF SITE 6
2.4 THE CITY'S RIGHT TO STOP THE WORK 7
2.5 THE CITY'S RIGHT TO CARRY OUT WORK 7

ARTICLE 3 - CONTRACTOR 7

3.1 RESPONSIBILITIES 7
3.2 REVIEW OF CONTRACT AND FIELD CONDITIONS BY CONTRACTOR 7
3.3 SUPERVISION AND CONSTRUCTION PROCEDURES 7
3.4 SUPERINTENDENT 8
3.5 LABOR 8
3.6 PREVAILING WAGE RATES 9
3.7 LABOR CONDITIONS 9
3.8 DRUG DETECTION AND DETERRENCE 9
3.9 MATERIALS & EQUIPMENT 10
3.10 PRODUCT OPTIONS AND SUBSTITUTIONS 10
3.11 CASH ALLOWANCES 11
3.12 WARRANTY 11
3.13 TAXES 12
3.14 PERMITS, FEES, AND NOTICES 12
3.15 CONSTRUCTION SCHEDULES 12
3.16 DOCUMENTS AND SAMPLES AT THE SITE 12
3.17 MANUFACTURER'S SPECIFICATIONS 12
3.18 SHOP DRAWINGS, PRODUCT DATA, AND SAMPLES 13
3.19 CULTURAL RESOURCES AND ENDANGERED SPECIES 13
3.20 CUTTING AND PATCHING 14
3.21 CLEANING 14
3.22 SANITATION 14
3.23 ACCESS TO WORK AND TO INFORMATION 14
3.24 TRADE SECRETS 14
3.25 INDEMNIFICATION 14
3.26 RELEASE AND INDEMNIFICATION – PATENT, COPYRIGHT, TRADEMARK, AND TRADE SECRET INFRINGEMENT 15
3.27 INDEMNIFICATION PROCEDURES 15
3.28 CONTRACTOR DEBT 156

ARTICLE 4 - ADMINISTRATION OF THE CONTRACT 16

4.1 CONTRACT ADMINISTRATION 16
4.2 COMMUNICATIONS IN ADMINISTRATION OF THE CONTRACT 17
4.3 CLAIMS AND DISPUTES 17
4.4 RESOLUTION OF CLAIMS AND DISPUTES 18
4.5 CONDITION PRECEDENT TO SUIT; WAIVER OF ATTORNEYFEES AND INTEREST 18
4.6 INTERIM PAYMENT WAIVER & RELEASE 18

ARTICLE 5 - SUBCONTRACTORS AND SUPPLIERS 19

5.1 AWARD OF SUBCONTRACTS OTHER CONTRACTS FOR PORTIONS OF THE WORK 19
5.2 CONTRACTOR RESPONSIBILITY FOR SUBCONTRACTORS 19

ARTICLE 6 - CONSTRUCTION BY THE CITY OR BY SEPARATE CONTRACTORS 19

6.1 THE CITY'S RIGHT TO PERFORM CONSTRUCTION AND TO AWARD SEPARATE CONTRACTS 19
6.2 COORDINATION 19
6.3 MUTUAL RESPONSIBILITY 20
6.4 THE CITY'S RIGHT TO CLEAN UP 20

ARTICLE 7 - CHANGES IN THE WORK 20

7.1 CHANGES 20
7.2 WORK CHANGE DIRECTIVES 20
7.3 ADJUSTMENTS IN CONTRACT PRICE 21
7.4 MINOR CHANGES IN THE WORK 22

ARTICLE 8 - TIME 22

8.1 PROGRESS AND COMPLETION 22
8.2 DELAYS AND EXTENSIONS OF TIME 22

ARTICLE 9 - PAYMENTS AND COMPLETION 23

9.1 UNIT PRICE WORK 23
9.2 ESTIMATES FOR PAYMENT, UNIT PRICE WORK 23
9.3 STIPULATED PRICE WORK 24
9.4 APPLICATIONS FOR PAYMENT, STIPULATED PRICE WORK 24
9.5 CERTIFICATES FOR PAYMENT 24
9.6 COMPUTATIONS OF CERTIFICATES FOR PAYMENT 24
9.7 DECISIONS TO WITHHOLD CERTIFICATION 24
9.8 PROGRESS PAYMENTS 25
9.9 DATE OF SUBSTANTIAL COMPLETION 25
9.10 PARTIAL OCCUPANCY OR USE 26
9.11 FINAL COMPLETION AND FINAL PAYMENT 26

9.12 LIQUIDATED DAMAGES 27

ARTICLE 10 - SAFETY PRECAUTIONS 27

10.1 SAFETY PROGRAMS 27
10.2 POLLUTANTS AND POLLUTANT FACILITIES 28
10.3 SAFETY OF THE ENVIRONMENT, PERSONS, AND PROPERTY 28
10.4 EMERGENCIES 28

ARTICLE 11 - INSURANCE AND BONDS 28

11.1 GENERAL INSURANCE REQUIREMENTS 28
11.2 INSURANCE TO BE PROVIDED BY CONTRACTOR 29
11.3 PROOF OF INSURANCE 32
11.4 PERFORMANCE AND PAYMENT BONDS 33
11.5 MAINTENANCE BONDS 33
11.6 SURETY 33
11.7 DELIVERY OF BONDS 344

ARTICLE 12 - UNCOVERING AND CORRECTION OF THE WORK 344

12.1 UNCOVERING OF THE WORK 34
12.2 CORRECTION OF THE WORK 34
12.3 ACCEPTANCE OF NONCONFORMING WORK 34

ARTICLE 13 - MISCELLANEOUS PROVISIONS 34

13.1 GOVERNING LAWS 34
13.2 SUCCESSORS 345
13.3 BUSINESS STRUCTURE AND ASSIGNMENTS . 355
13.4 WRITTEN NOTICE 35
13.5 RIGHTS AND REMEDIES 35
13.6 TESTS AND INSPECTIONS 35
13.7 INTEREST 35
13.8 PARTIES IN INTEREST 36
13.9 ENTIRE CONTRACT 36
13.10 WRITTEN AMENDMENT 36
13.11 COMPLIANCE WITH LAWS 36
13.12 SEVERABILITY 36

ARTICLE 14 - TERMINATION OR SUSPENSION OF THE CONTRACT 36

14.1 TERMINATION BY THE CITY FOR CAUSE 36
14.2 TERMINATION BY THE CITY FOR CONVENIENCE 37
14.3 SUSPENSION BY THE CITY FOR CONVENIENCE 37
14.4 TERMINATION BY CONTRACTOR 38

ARTICLE 1 - GENERAL PROVISIONS

1.1 DEFINITIONS

1.1.1 Agreement: Document signed by the Parties and binding the Parties, containing the name of Contractor, title and location of the Project, Original Contract Time, Original Contract Price, enumeration of documents included in the Contract, and other provisions.

1.1.2 Bonds: Performance Bond, Payment Bond, Maintenance Bond, and other Surety instruments executed by Surety. When in singular form, refers to individual instrument.

1.1.3 Business Enterprise: Any business entity registered in a program authorized by 49 C.F.R. § 26 (where applicable) or City Code of Ordinances, Chapter 15, Article II, relating to Equal Opportunity Employment and taking affirmative action to ensure that applicants are employed and employees are treated without regard to race, religion, color, sex, national origin, or age. The term "Business Enterprise" may include any Disadvantaged Business Enterprise ("DBE"), Minority Business Enterprise ("MBE"), Woman Business Enterprise ("WBE"), Small Business Enterprise ("SBE"), Person with Disability Enterprise ("PDBE"), and any Historically Underutilized Business ("HUB").

1.1.4 Business Enterprise Policy: Contract documents and applicable policies relating to Business Enterprises and authorized under 49 C.F.R. § 26 or City Code of Ordinances, Chapter 15, Article II.

1.1.5 Cash Allowance: An estimated sum of money to be used only for a limited class of expenditures such as utility relocation costs, fees for special licenses or permits, or other "pass-through" costs that would be the same for any contractor. Cash Allowances may not be used to purchase goods or services that are not specified in the Contract. The unspecified items must be purchased according to the terms of Article 7.

1.1.6 Change Order: Written instrument prepared by the City and signed by City Engineer and Contractor, specifying the following:

1.1.6.1 a change in the Work;
1.1.6.2 a change in Contract Price, if any; and
1.1.6.3 a change in Contract Time, if any.

The value of a Change Order is the net amount after offsetting all deductions against all additions effected by the Change Order.

1.1.7 City: The City of Houston, a home rule municipality located principally within Harris County, Texas, including its successors and its authorized representatives.

1.1.8 City Engineer: The City Engineer, or the City employee representing the City Engineer, designated in the Agreement and authorized to represent the City, or successors.

1.1.9 Claim: Written demand or written assertion by one Party seeking adjustment of the Contract, payment of money, extension of time, or other relief under the Contract and includes, but is not limited to, claims for materials, labor, equipment, delay, changes, adjustments, substitutions, fees and third party claims. The Party making the Claim has the responsibility to substantiate the Claim.

1.1.10 Conditions of the Contract: General Conditions and Supplementary Conditions.

1.1.11 Construction Manager: Person or firm under contract with the City as its authorized representative to oversee and administer construction of the Work, and who may perform the role of Project Manager and Inspector, as designated by City Engineer in writing.

1.1.12 Contract: The Agreement; documents enumerated in and incorporated into the Agreement, Modifications, and amendments.

1.1.13 Contract Price: The monetary amount stated in the Agreement adjusted by Change Order, and increases or decreases in Unit Price Quantities, if any.

1.1.14 Contract Time: The number of days stated in the Agreement to substantially complete the Work, plus days authorized by Change Order.

1.1.15 Contractor: Person or firm identified as such in the Agreement including its successors and its authorized representatives.

1.1.16 Date of Commencement of the Work: Date established in Notice to Proceed on which Contract Time will commence. This date will not be changed by failure of Contractor, or persons or entities for whom Contractor is responsible, to act.

1.1.17 Date of Substantial Completion: Date that construction, or portion thereof designated by City Engineer, is certified by City Engineer to be substantially complete.

1.1.18 Design Consultant: Person or firm, under contract with the City, to provide professional services during construction and its authorized representatives. If a Design Consultant is not employed for services during construction, Project Manager will perform duties of Design Consultant designated in the Contract in addition to usual duties of Project Manager.

1.1.19 Drawings: Graphic and pictorial portions of the Contract that define the character and scope of the Work.

1.1.20 Extra Unit Price: Unit Prices, which may be required for completion of the Work. These Unit Prices and Unit Price Quantities are in the Contract and are included in Original Contract Price.

1.1.21 Furnish: To supply, pay for, deliver to the site, and unload.

1.1.22 General Requirements: The sections of Division 01 Specifications that specify administrative and procedural requirements and temporary facilities required for the Work.

1.1.23 Inspector: City's employee or agent authorized to assist with inspection of the Work.

1.1.24 Install: Unpack, assemble, erect, place, anchor, apply, work to dimension, finish, cure, clean, protect, and similar operations.

1.1.25 Legal Holiday: Day established by the City Council as a holiday.

1.1.26 Major Unit Price Work: An individual Unit Price item,

1.1.26.1 whose value is greater than five percent of Original Contract Price,

1.1.26.2 whose value becomes greater than five percent of Original Contract Price as the result of an increase in quantity, or

1.1.26.3 whose value is $100,000, whichever is least.

1.1.27 Minor Change in the Work: A written change in the Work, ordered by City Engineer, that does not change Contract Price or Contract Time, and that is consistent with the general scope of the Contract.

1.1.28 Modification: Change Order, Work Change Directive, or Minor Change in the Work.

1.1.29 Notice of Noncompliance: A written notice by City Engineer to Contractor regarding defective or nonconforming work that does not meet the Contract requirements, and that establishes a time by which Contractor shall correct the defective or nonconforming work.

1.1.30 Notice to Proceed: A written notice by City Engineer to Contractor establishing Date of Commencement of the Work.

1.1.31 Office of Business Opportunity: any reference to, or use of, the "Office of Affirmative Action" shall mean the Office of Business Opportunity, or any such future name to which it is changed.

1.1.32 Original Contract Price: The monetary amount originally stated in the Agreement.

1.1.33 Parties: Contractor and the City. When in singular form, refers to Contractor or the City.

1.1.34 Pollutant: Any materials subject to the Texas Solid Waste Disposal Act.

1.1.35 Pollutant Facility: Any facility regulated by the State of Texas to protect the health and environment from contamination by Pollutants, including without limitation, landfills, oil and gas production and storage facilities, wastewater facilities, waste injection wells, and storage tanks (including drums).

1.1.36 Product: Materials, equipment, or systems incorporated into the Work or to be incorporated into the Work.

1.1.37 Product Data: Illustrations, standard schedules, performance charts, instructions, brochures, diagrams, and other information furnished by Contractor to illustrate a Product.

1.1.38 Project: Total construction, of which the Work performed under the Contract may be the whole or a part, and which may include construction by the City or by separate contractors.

1.1.39 Project Manager: City Engineer's authorized representative for administration of the Work. Titles used within the City's departments may be different than those used in this definition.

1.1.40 Provide: Furnish and Install, complete, ready for intended use.

1.1.41 *Samples:* Physical examples that illustrate Products, or workmanship, and establish standards by which the Work is judged.

1.1.42 *Shop Drawings:* Drawings, diagrams, schedules, and other data specially prepared for the Work by Contractor, Subcontractor or Supplier, to illustrate a portion of the Work.

1.1.43 *Specifications:* Divisions 01 through 16 of the documents that are incorporated into the Agreement, consisting of written General Requirements and requirements for Products, standards, and workmanship for the Work, and performance of related services.

1.1.44 *Stipulated Price:* Single lump sum amount stated in the Contract for completion of the Work, or for designated portion of the Work.

1.1.45 *Subcontractor:* Person or firm that has direct or indirect contract with Contractor or with another Subcontractor to perform a portion of the Work and its authorized representatives.

1.1.46 *Superintendent:* Employee of Contractor having authority and responsibility to act for and represent Contractor.

1.1.47 *Supplementary Conditions:* Part of Conditions of the Contract that amends or supplements General Conditions.

1.1.48 *Supplier:* Manufacturer, distributor, materialman, or vendor having a direct agreement with Contractor or Subcontractor for Products, or services and its authorized representatives.

1.1.49 *Surety:* Corporate entity that is bound by one or more Bonds, and is responsible for completion of the Work, including the correction period, and for payment of debts incurred in fulfilling the Contract. Surety shall include co-surety or reinsurer, as applicable.

1.1.50 *Underground Facilities:* Pipes, conduits, ducts, cables, wires, manholes, vaults, tanks, tunnels, or other such facilities or attachments and encasements containing such facilities that exist below ground level.

1.1.51 *Unit Price:* An amount stated in the Contract for an individual, measurable item of work, which, when multiplied by actual quantity incorporated into the Work, amounts to full compensation for completion of the item, including work incidental to it.

1.1.52 *Unit Price Quantities:* Quantities indicated in the Contract that are approximations made by the City for contracting purposes.

1.1.53 *Work:* Entire construction required by the Contract, including all labor, Products, and services provided by Contractor to fulfill Contractor's obligations. The Work may constitute the whole or a portion of the Project.

1.1.54 *Work Change Directive:* A written change in the Work, ordered by City Engineer, that is within the general scope of the Contract and consisting of additions, deletions, or other revisions. A Work Change Directive will state proposed basis for adjustment, if any, in Contract Price or Contract Time, or both.

1.2 *EXECUTION, CORRELATION, AND INTENT*

1.2.1 Execution of the Contract by Contractor is conclusive that Contractor has visited the Work site, become familiar with local conditions under which the Work will be performed, and fully informed itself as to conditions and matters which can affect the Work or costs. Contractor further agrees that it has carefully correlated personal observations with requirements of the Contract.

1.2.2 The Contract and Modifications have been read and carefully considered by Contractor, who understands and agrees to their sufficiency for the Work. The Contract may not be more strongly construed against the City than against Contractor and Surety.

1.2.3 Contractor shall include all items necessary for proper execution and completion of the Work.

1.2.4 Reference to standard specifications, manuals, or codes of a technical society, organization, or association, or to laws or regulations of a governmental authority, whether specific or implied, mean the latest edition in effect as of date of receipt of bids, except as may be otherwise specifically stated in the Contract.

1.2.5 No provision of any referenced standard, specification, or manual changes the duties and responsibilities of the City, City Engineer, Contractor, or Design Consultant from those set forth in the Contract. Nor do these provisions assign to Design Consultant any duty or authority to supervise or direct performance of the Work or any duty or

authority to undertake any actions contrary to provisions of the Contract.

1.2.6 Organization of Specifications into divisions, sections, and articles and arrangement of Drawings does not control Contractor in dividing the Work among Subcontractors or in establishing the extent of work to be performed by any trade.

1.2.7 Unless otherwise defined in the Contract, words which have well-known construction industry technical meanings are used in the Contract in accordance with these recognized meanings.

1.3 OWNERSHIP AND USE OF DOCUMENTS

1.3.1 Drawings, Specifications, and other documents prepared by the City or by Design Consultant are instruments of service through which the Work to be executed by Contractor is described. Contractor may retain one Contract record set.

1.3.2 Neither Contractor, Subcontractor, nor Supplier will own or claim a copyright to documents contained in the Contract or any part of the Contract.

1.3.3 Documents contained in the Contract, prepared by the City or by Design Consultant, and copies furnished to Contractor, are for use solely with respect to the Work. They may not be used by Contractor, Subcontractor or Supplier on other projects or for additions to the Work, outside the scope of the Work, without the specific written consent of City Engineer, and Design Consultant, when applicable.

1.3.4 Contractor, Subcontractors, and Suppliers are granted a limited license to use and reproduce applicable portions of the Contract appropriate to and for use in execution of their work under the Contract.

1.4 *INTERPRETATION*

1.4.1 Specifications are written in an imperative streamlined form and are directed to Contractor, unless noted otherwise. When written in this form, words "shall be" are included by inference where a colon (:) is used within sentences or phrases.

1.4.2 In the interest of brevity, the Contract frequently omits modifying words such as "all" and "any" and articles such as "the" and "an", but an absent modifier or article is not intended to affect interpretation of a statement.

ARTICLE 2 - THE CITY

2.1 *LIMITATIONS OF THE CITY'S OFFICERS AND EMPLOYEES*

2.1.1 No officer or employee of the City may authorize Contractor to perform an act or work contrary to the Contract, except as otherwise provided in the Contract.

2.2 *DUTIES OF THE CITY*

2.2.1 If a building permit is required, the City will process an application for, and Contractor shall purchase the building permit before Date of Commencement of the Work.

2.2.2 The City will make available to Contractor a reproducible set of Drawings. Additional copies will be furnished, on Contractor's request, at the cost of reproduction.

2.2.3 When necessary for performance of the Work, the City will provide surveys describing physical characteristics, legal limitations, legal description of site, and horizontal and vertical control adequate to lay out the Work.

2.2.4 Information or services that the City is required to provide under the Contract will be provided by the City with reasonable promptness to avoid delay in orderly progress of the Work.

2.2.5 The Contract imposes no implied duty on the City. The City does not warrant any plans or specifications associated with the Contract.

2.2.6 Except as expressly stated in this Article, the City owes no duty to the Contractor or any subcontractor.

2.3 *AVAILABILITY OF LAND AND USE OF SITE*

2.3.1 The City will furnish, as indicated in the Contract, rights-of-way, land on which the Work is to be performed, and other land designated in the Contract for use by Contractor unless otherwise provided in the Contract.

2.3.2 Contractor shall confine operations at site to those areas permitted by law, ordinances, permits, and the Contract, and may not unreasonably encumber site with materials or equipment.

2.3.3 In addition to land provided by the City under Section 2.3, Contractor shall provide all land and access to land that may be required for use by Contractor for temporary construction facilities or for storage of materials and equipment, and shall indemnify the City during its use of the land as stated in Section 3.25.

2.4 *THE CITY'S RIGHT TO STOP THE WORK*

2.4.1 If Contractor fails to carry out the Work in accordance with the Contract, or fails to correct work which is not in accordance with requirements of the Contract as required in Sections 12.1 and 12.2, the City may, by Notice of Noncompliance, order Contractor to stop the Work or any portion of the Work until the cause for the order has been eliminated. However, the right of the City to stop the Work will not give rise to a Claim for delay or to a duty on the part of the City to exercise this right for the benefit of Contractor or any other person or entity, except to the extent required by Section 6.2. If Contractor corrects the defective or nonconforming work within the time established in Notice of Noncompliance, City Engineer will give written notice to Contractor to resume performance of the Work.

2.5 *THE CITY'S RIGHT TO CARRY OUT WORK*

2.5.1 If Contractor fails to carry out work in accordance with the Contract, and fails within the period established in a Notice of Noncompliance to correct the nonconforming work, the City may, after expiration of the required period, correct the deficiencies without prejudice to other remedies the City may have, including rights of the City under Section 14.1.

2.5.1.1 When the City corrects deficiencies, City Engineer will issue an appropriate Change Order and deduct from payments then or thereafter due Contractor the cost of correcting the deficiencies, including compensation for Design Consultant's and Construction Manager's additional services and expenses made necessary by such default, neglect, or failure. This action by the City and amounts charged to Contractor are both subject to prior approval of City Engineer. If payments, then or thereafter due Contractor, are not sufficient to cover these amounts, Contractor shall pay the difference to the City.

2.5.2 Notwithstanding the City's right to carry out work, maintenance and protection of the Work remains Contractor's responsibility, as provided in the Contract.

ARTICLE 3 - CONTRACTOR

3.1 *RESPONSIBILITIES*

3.1.1 Contractor shall maintain office with agent in the greater City of Houston area during the Contractor's performance under the Contract. Contractor shall file its street address with City Engineer.

3.1.2 Contractor and Contractor's employees shall not give or lend money or anything of value to an officer or employee of the City. Should this Paragraph 3.1.2 be violated, City Engineer may terminate the Contract under Section 14.1.

3.2 *REVIEW OF CONTRACT AND FIELD CONDITIONS BY CONTRACTOR*

3.2.1 Contractor shall carefully study and compare documents contained in the Contract with each other and with information furnished by the City pursuant to Section 2.2 and shall immediately report, in writing, any errors, inconsistencies, or omissions to City Engineer. If work is affected, Contractor shall obtain a written interpretation or clarification from City Engineer before proceeding with the affected work. However, Contractor will not be liable to the City for failure to report an error, inconsistency, or omission in the Contract unless Contractor had actual knowledge or should have had knowledge of the error, inconsistency, or omission.

3.2.2 Contractor shall take field measurements and verify field conditions, and shall carefully compare the conditions and other information known to Contractor with the Contract, before commencing activities. Contractor shall immediately report, in writing, to City Engineer for interpretation or clarification of discrepancies, inconsistencies, or omissions discovered during this process.

3.2.3 Contractor shall make a reasonable attempt to understand the Contract before requesting interpretation from City Engineer.

3.3 *SUPERVISION AND CONSTRUCTION PROCEDURES*

3.3.1 Contractor shall supervise, direct, and inspect the Work competently and efficiently, devoting the attention and applying the skills and

expertise as necessary to perform the Work in accordance with the Contract. Contractor is solely responsible and has control over construction means, methods, techniques, sequences, and procedures of construction; for safety precautions and programs in connection with the Work; and for coordinating all work under the Contract.

3.3.2 Regardless of observations or inspections by the City or City's consultants, Contractor shall perform and complete the Work in accordance with the Contract and submittals approved pursuant to Section 3.18. The City is not liable or responsible to Contractor or Surety for work performed by Contractor that is not in accordance with the Contract regardless of whether discovered during construction or after acceptance of the Work.

3.4 *SUPERINTENDENT*

3.4.1 Contractor shall employ a competent Superintendent and necessary assistants who shall be present at the site during performance of the Work. Communications given to Superintendent are binding on the Contractor.

3.4.2 Contractor shall notify City Engineer in writing of its intent to replace the Superintendent. Contractor may not replace the Superintendent if City Engineer makes a reasonable objection in writing.

3.5 *LABOR*

3.5.1 Contractor shall provide competent, qualified personnel to survey and lay out the Work and perform construction as required by the Contract. The City may, by written notice, require Contractor to remove from the Work any employee of Contractor or Subcontractors to whom City Engineer makes reasonable objection.

3.5.2 Contractor shall comply with the applicable Business Enterprise Policy set out in this Agreement and in the Supplementary Conditions, as set out in Chapter 15, Article V of the City of Houston Code of Ordinances.

3.5.3 When Original Contract Price is greater than $1,000,000, Contractor shall make Good Faith Efforts to award subcontracts or supply agreements in at least the percentages set out in the Supplementary Conditions for Business Enterprise Policy. Contractor acknowledges that it has reviewed the requirements for Good Faith Efforts on file with the City's Office of Business Opportunity and shall comply with them.

3.5.3.1 Contractor shall require written subcontracts with Business Enterprises and shall submit all disputes with Business Enterprises to voluntary mediation. Business Enterprise subcontracts complying with City Code of Ordinances Chapter 15, Article II must contain the terms set out in Subparagraph 3.5.3.2. If Contractor is an individual person, as distinguished from a corporation, partnership, or other legal entity, and the amount of the subcontract is $50,000 or less, the subcontract must also be signed by the attorneys of the respective parties.

3.5.3.2 Contractor shall ensure that subcontracts with Business Enterprise firms are clearly labeled **"THIS CONTRACT MAY BE SUBJECT TO MEDIATION ACCORDING TO THE TEXAS ALTERNATIVE DISPUTE RESOLUTION ACT"** and contain the following terms:

3.5.3.2.1 (Business Enterprise) may not delegate or subcontract more than 50 percent of work under this subcontract to any other subcontractor without the express written consent of the City's OBO Director (the "Director").

3.5.3.2.2 (Business Enterprise) shall permit representatives of the City of Houston, at all reasonable times, to perform (1) audits of the books and records of the Subcontractors and Suppliers, and (2) inspections of all places where work is to be undertaken in connection with this subcontract. (Business Enterprise) shall keep the books and records available for this purpose for at least four years after the end of its performance under this subcontract. Nothing in this provision shall affect the time for bringing a cause of action nor the applicable statute of limitations.

3.5.3.2.3 Within five business days of execution of this subcontract, Contractor and (Business Enterprise) shall designate in writing to the Director an agent for receiving any notice required or permitted to be given pursuant to Chapter 15 of the Houston City Code of Ordinances, along with the street and mailing address and phone number of the agent.

3.5.4 The requirements and terms of the City of Houston Pay or Play Program, as set out in Executive Order 1-7 and Ordinance 2007-0534, are incorporated into the Contract for all purposes. Contractor shall comply with the terms and conditions of the Pay or Play Program as they are set out at the time of City Council approval of this

agreement. IF CONTRACTOR DOES NOT PAY IN ACCORDANCE WITH THE PAY OR PLAY PROGRAM WITHIN 30 DAYS OF THE DATE CITY ENGINEEER SENDS CONTRACTOR WRITTEN NOTIFICATION, CITY CONTROLLER MAY DEDUCT FUNDS UP TO THE AMOUNT OWED FROM ANY PAYMENTS OWED TO CONTRACTOR UNDER THIS AGREEMENT, AND CONTRACTOR WAIVES ANY RECOURSE.

3.6 *PREVAILING WAGE RATES*

3.6.1 Contractor shall comply with governing statutes providing for labor classification of wage scales for each craft or type of laborer, worker, or mechanic.

3.6.2 Prevailing wage rates applicable to the Work may be one or a combination of the following wage rates identified in Division 00:

- 3.6.2.1 Federal Wage Rate General Decisions
  - 3.6.2.1.1 Highway Rates
  - 3.6.2.1.2 Building Rates
  - 3.6.2.1.3 Heavy Construction Rates
  - 3.6.2.1.4 Residential Rates
- 3.6.2.2 City Prevailing Wage Rates
  - 3.6.2.2.1 Building Construction Rates
  - 3.6.2.2.2 Engineering Construction Rates
  - 3.6.2.2.3 Asbestos Worker Rates

3.6.3 Each week Contractor shall submit to the City's Mayor's Office of Business Opportunity certified copies of payrolls showing classifications and wages paid by Contractor, Subcontractors, and Suppliers for each employee under the Contract, for any day included in the Contract.

3.7 *LABOR CONDITIONS*

3.7.1 In the event of labor disputes affecting Contractor or Contractor's employees, Contractor shall utilize all possible means to resolve disputes in order that the Work not be delayed to any extent. These means will include seeking injunctive relief and filing unfair labor practice charges, and any other action available to Contractor.

3.7.2 When Contractor has knowledge that any actual or potential labor dispute is delaying or is threatening to delay timely performance of the Work, Contractor shall immediately notify City Engineer in writing. No Claims will be accepted by City Engineer for costs incurred as a result of jurisdictional or labor disputes.

3.8 *DRUG DETECTION AND DETERRENCE*

3.8.1 It is the policy of the City to achieve a drug-free work force and to provide a workplace that is free from the use of illegal drugs and alcohol. It is also the policy of the City that manufacture, distribution, dispensation, possession, sale, or use of illegal drugs or alcohol by contractors while on the City's premises is prohibited. By executing the Contract, Contractor represents and certifies that it meets and will comply with all requirements and procedures set forth in the Mayor's Policy on Drug Detection and Deterrence, City Council Motion No. 92-1971 ("Mayor's Policy") and the Mayor's Drug Detection and Deterrence Procedures for Contractors, Executive Order No. 1-31, (Revised) ("Executive Order"). Mayor's Policy is on file in the office of the City Secretary. Copies of Executive Order may be obtained at the location specified in the Advertisement for Bids.

3.8.1.1 The Executive Order applies to the City's contracts for labor or services except the following:

- 3.8.1.1.1 contracts authorized by Emergency Purchase Orders,
- 3.8.1.1.2 contracts in which imposition of requirements of the Executive Order would exclude all potential bidders or proposers, or would eliminate meaningful competition for the Contract,
- 3.8.1.1.3 contracts with companies that have fewer than 15 employees during any 20-week period during a calendar year and no safety impact positions,
- 3.8.1.1.4 contracts with non-profit organizations providing services at no cost or reduced cost to the public, and
- 3.8.1.1.5 contracts with federal, state, or local governmental entities.

3.8.1.2 Prior to execution of the Contract, Contractor shall have filed with the City:

- 3.8.1.2.1 a Drug Policy Compliance Agreement form (Attachment "A" to the Executive Order), and
- 3.8.1.2.2 a copy of Contractor's drug free workplace policy, and
- 3.8.1.2.3 a written designation of all safety impact positions, if applicable, or a Contractor's Certification of a No Safety Impact Positions form (Attachment "C" to the Executive Order).

3.8.1.3 Every six months during performance of the Contract and upon completion of the Contract, Contractor shall file a Drug Policy Compliance Declaration form (Attachment "B" to the Executive Order). The Contractor shall submit the Drug Policy Compliance Declaration within 30 days of expiration of each six-month period of performance and within 30 days of completion of the Contract. The first six-month period shall begin on Date of Commencement of the Work.

3.8.1.4 Contractor shall have a continuing obligation to file updated designation of safety impact positions when additional safety impact positions are added to Contractor's employee workforce during performance of the Work.

3.8.1.5 Contractor shall require its Subcontractors and Suppliers to comply with the Mayor's Policy and Executive Order. Contractor is responsible for securing and maintaining required documents from Subcontractors and Suppliers for the City inspection throughout the term of the Contract.

3.8.1.6 Failure of Contractor to comply with requirements will be a material breach of the Contract entitling the City to terminate in accordance with Section 14.1.

3.9 *MATERIALS & EQUIPMENT*

3.9.1 Unless otherwise provided in the Contract, Contractor shall provide and assume full responsibility for Products, labor, transportation, construction equipment and machinery, tools, appliances, fuel, power, light, heat, telephone, water, sanitary facilities, transportation, temporary facilities, supplies, and other facilities and incidentals necessary for Furnishing, performing, testing, starting-up, and completing the Work.

3.9.1.1 Contractor, Subcontractors, and Suppliers shall use Ultra Low Sulfur Diesel Fuel in all diesel operating vehicles and motorized equipment utilized in performing the Work. Ultra Low Sulfur Diesel Fuel is defined as diesel fuel having 15 ppm or the applicable standard set by state or federal law or rules and regulations of the Texas Commission on Environmental Quality, or the Environmental Protection Agency, whichever is less in sulfur content. Off-road Ultra Low Sulfur Diesel Fuel may be used in lieu of on-road Ultra Low Sulfur Diesel Fuel. Contractor shall provide, upon request by City Engineer, proof that Contractor, Subcontractors, and Suppliers are using Ultra Low Sulfur Diesel Fuel.

3.9.2 Contractor shall provide Products that are:

3.9.2.1 new, unless otherwise required or permitted by the Contract, and

3.9.2.2 of specified quality.

If required by City Engineer, Contractor shall furnish satisfactory evidence, including reports of required tests, as to kind and quality of Products.

3.9.3 Contractor shall store Products in a safe, neat, compact, and protected manner. Contractor shall also store Products delivered during the work, along the right-of-way:

3.9.3.1 so as to cause the least inconvenience to property owners, tenants, and general public; and

3.9.3.2 so as not to block access to, or be closer than, three feet to any fire hydrant.

Contractor shall protect trees, lawns, walks, drives, streets, and other improvements that are to remain, from damage. If private or public property is damaged by Contractor, Contractor shall, at its sole expense, restore the damaged property to at least its original condition.

3.9.3.1 Contractor shall obtain City Engineer's approval for storage areas used for Products for which payment has been requested under Paragraph 9.6.1. Contractor shall provide the City access to the storage areas for inspection purposes. Products, once paid for by the City, become the property of the City and may not be removed from place of storage, without City Engineer's written permission except for a movement to the site. Contractor's Installation Floater, required under Section 11.2, shall cover all perils, including loss or damage to Products during storage, loading, unloading, and transit to the site.

3.10 *PRODUCT OPTIONS AND SUBSTITUTIONS*

3.10.1 For Products specified by reference standards or by description only, Contractor may provide any Product meeting those standards or description.

3.10.2 For Products specified by naming one or more manufacturers with provision for substitutions or equal, Contractor may submit a request for substitution for any manufacturer not named.

3.10.3 City Engineer will consider requests for substitutions only within the first 15 percent of Contract Time, or first 90 days after date of Notice to Proceed, whichever is less.

3.10.4 Contractor shall document each request for substitution with complete data

substantiating compliance of proposed substitution with the Contract.

3.10.5 A request for substitution constitutes a representation that Contractor:

3.10.5.1 has investigated the proposed Product and determined that it meets or exceeds the quality level of the specified Product;

3.10.5.2 shall provide the same warranty for the substitution as for the specified Product;

3.10.5.3 shall coordinate installation of the proposed substitution and make changes to other work which may be required for the Work to be completed, with no additional cost or increase in time to the City;

3.10.5.4 confirms that cost data is complete and includes all related costs under the Contract;

3.10.5.5 waives Claim for additional costs or time extensions that may subsequently become apparent; and

3.10.5.6 shall provide review or redesign services by a design consultant with appropriate professional license and shall obtain re-approval and permits from authorities.

3.10.6 City Engineer will not consider and will not approve substitutions when:

3.10.6.1 they are indicated or implied on Shop Drawing or Product Data submittals without separate written request; or

3.10.6.2 acceptance will require revision to the Contract.

3.10.7 City Engineer may reject requests for substitution, and his decision will be final and binding on the Parties.

3.11 *CASH ALLOWANCES*

3.11.1 Contract Price includes Cash Allowances as identified in the Contract.

3.11.2 The City will pay the actual costs of Cash Allowance item exclusive of profit, overhead or administrative costs. If actual costs exceed the Cash Allowance, City Engineer must approve a Change Order for the additional costs.

3.12 *WARRANTY*

3.12.1 Contractor warrants to the City that Products furnished under the Contract are:

3.12.1.1 free of defects in title;

3.12.1.2 of good quality; and

3.12.1.3 new, unless otherwise required or permitted by the Contract.

If required by the City Engineer, Contractor shall furnish satisfactory evidence as to kind, quality and title of Products, and that Products conform to requirements of the Contract.

3.12.2 In the event of a defect in a Product, either during construction or warranty period, Contractor shall take appropriate action with manufacturer of Product to assure correction or replacement of defective Product with minimum delay.

3.12.3 Contractor warrants that the Work is free of defects not inherent in the quality required or permitted, and that the Work does conform with the requirements of the Contract. Contractor further warrants that the Work has been performed in a thorough and workmanlike manner.

3.12.4 Contractor warrants that the Work is free of concentrations on polychlorinated biphenyl (PCB) and other substances defined as hazardous by the Comprehensive Environmental Response Compensation and Liability Act (CERCLA) or any other applicable law or regulation.

3.12.5 Work not conforming to requirements of Section 3.12, including substitutions not properly approved and authorized, may be considered nonconforming work.

3.12.6 Contractor's warranty excludes remedy for damage or defect caused by:

3.12.6.1 improper or insufficient maintenance by the City;

3.12.6.2 normal wear and tear under normal usage; or

3.12.6.3 claim that hazardous material was incorporated into the Work, if that material was specified in the Contract.

3.12.7 Contractor warrants that title to all work covered by Contractor's request for payment passes to the City upon incorporation into the Work or upon Contractor's receipt of payment, whichever occurs first. The Contractor further warrants that the title is free of all liens, claims, security interests or other interests ("Encumbrances"). If not, upon written demand from City Engineer, Contractor shall immediately take legal action necessary to remove Encumbrances.

3.13 *TAXES*

3.13.1 Contractor shall pay all sales, consumer, use, and similar taxes, which are in effect or scheduled to go into effect on or before bids are received, related to work provided by Contractor.

3.13.2 Contractor shall obtain, and require Subcontractors and Suppliers to obtain, necessary permits from the state and local taxing authorities to perform contractual obligations under the Contract, including sales tax permits.

3.13.3 The City is exempt from the Federal Transportation and Excise Tax. Contractor shall comply with federal regulations governing the exemptions.

3.13.4 Products incorporated into the Work are exempt from state sales tax according to provisions of the TEX. TAX CODE ANN. CH. 151, Subsection H.

3.14 *PERMITS, FEES, AND NOTICES*

3.14.1 Unless otherwise provided in the Contract, Contractor shall secure and pay for all construction permits, licenses, and inspections:

3.14.1.1 necessary for proper execution and completion of the Work; and

3.14.1.2 legally required at time bids are received.

3.15 *CONSTRUCTION SCHEDULES*

3.15.1 On receipt of Notice to Proceed, Contractor shall promptly prepare and submit construction schedule for the Work for City Engineer's review. The schedule must reflect the minimum time required to complete the Work not to exceed Contract Time.

3.15.2 Contractor shall give 24-hour written notice to City Engineer before commencing work or resuming work where work has been stopped. Contractor shall also give the same notice to inspectors.

3.15.3 Contractor shall incorporate milestones specified in Summary of Work Specification into the construction schedule. Contractor's failure to meet a milestone, as determined by City Engineer, may be considered a material breach of the Contract.

3.15.4 Each month, Contractor shall submit to City Engineer a copy of an updated construction schedule indicating actual progress, incorporating applicable changes, and indicating courses of action required to assure completion of the Work within Contract Time.

3.15.5 Contractor shall keep a current schedule of submittals that coordinates with the construction schedule, and shall submit the initial schedule of submittals to City Engineer for approval.

3.16 *DOCUMENTS AND SAMPLES AT THE SITE*

3.16.1 Contractor shall maintain at the site, and make available to City Engineer, one record copy of Drawings, Specifications, and Modifications. Contractor shall maintain the documents in good order and marked currently to record changes and selections made during construction. In addition, Contractor shall maintain at the site, approved Shop Drawings, Product Data, Samples, and similar submittals, which will be delivered to City Engineer prior to final inspection as required in Paragraph 9.11.4.

3.16.2 Contractor shall maintain all books, documents, papers, accounting records, and other relevant documentation pursuant to the Work and shall make the books, documents, papers, and accounting records available to representatives of the City for review and audits during the Contract term and for the greater of three years following Date of Substantial Completion or until all litigation or audits are fully resolved.

3.16.3 Contractor shall provide to City Attorney all documents and records that City Attorney deems necessary to assist in determining Contractor's compliance with the Contract, with the exception of those documents made confidential by federal or state law or regulation.

3.17 *MANUFACTURER'S SPECIFICATIONS*

3.17.1 Contractor shall handle, store, and Install Products and perform all work in the manner required by Product manufacturer. Should the Contract and manufacturer's instructions conflict, Contractor shall report conflict to City Engineer for resolution prior to proceeding with the affected work.

3.17.2 References in the Contract to the manufacturer's specifications, directions, or recommendations, mean manufacturer's current published documents in effect as of date of receipt of bids, or in the case of a Modification, as of date of Modification.

3.18 SHOP DRAWINGS, PRODUCT DATA, AND SAMPLES

3.18.1 Shop Drawings, Product Data, and Samples are not part of the Contract. The purpose of Contractor submittals is to demonstrate, for those portions of the Work for which submittals are required, the way Contractor proposes to conform to information given and design concept expressed in the Contract.

3.18.2 Contractor shall submit to Project Manager for review the Shop Drawings, Product Data, and Samples, which are required by the Contract. Review by Project Manager is subject to limitations of Paragraph 4.1.4. Contractor shall transmit the submittals to the Project Manager with reasonable promptness and in a sequence, so as to cause no delay in the Work or in activities of the City or of separate contractors. Contractor shall transmit submittals in time to allow a minimum of 30 days for Project Manager's review prior to date Contractor needs reviewed submittals returned. This time may be shortened for a particular job requirement if approved by Project Manager in advance of submittal.

3.18.3 Contractor shall certify that the content of submittals conforms to the Contract without exception by affixing Contractor's approval stamp and signature. By certifying and submitting Shop Drawings, Product Data, and Samples, Contractor represents, and Contractor's stamp of approval shall state, that Contractor has determined and verified materials, quantities, field measurements, and field construction criteria related to the submittal, and has checked and coordinated information contained within the submittals with requirements of the Contract.

3.18.4 Contractor may not perform any work requiring submittal and review of Shop Drawings, Product Data, or Samples until the submittal has been returned with appropriate review decision by the Project Manager. Contractor shall perform work in accordance with the review.

3.18.5 If Contractor performs any work requiring submittals prior to review and acceptance of the submittals by Project Manager, such work is at Contractor's risk and the City is not obligated to accept work if the submittals are later found to be unacceptable.

3.18.6 If, in the opinion of Project Manager, the submittals are incomplete, or demonstrate an inadequate understanding of the Work or lack of review by the Contractor, then submittals may be returned to the Contractor for correction and resubmittal.

3.18.7 Contractor shall direct specific attention in writing and on the resubmitted Shop Drawings, Product Data, or Samples to any additional proposed revisions, other than those revisions requested by Project Manager on previous submittals.

3.18.8 Contractor is not relieved of responsibility for deviations from requirements of the Contract by Project Manager's review of Shop Drawings, Product Data, or Samples unless Contractor has specifically informed Project Manager in writing of the deviation at the time of the submittal, and Project Manager has given written approval of the deviation.

3.18.9 When professional certification of performance criteria of Products is required by the Contract, the City may rely upon accuracy and completeness of the calculations and certifications.

3.18.10 For Product colors or textures to be selected by the City, Contractor shall submit all samples together to allow preparation of a complete selection schedule.

3.18.11 Contractor shall submit informational submittals, on which Project Manager is not expected to take responsive action, as required by the Contract.

3.18.12 Submittals made by Contractor which are not required by the Contract may be returned to Contractor without action.

3.19 CULTURAL RESOURCES AND ENDANGERED SPECIES

3.19.1 Contractor may not remove or disturb, or cause to be removed or disturbed, any historical, archaeological, architectural, or other cultural artifacts, relics, vestiges, remains, or objects of antiquity. If Contractor discovers one of these items, Contractor shall immediately notify City Engineer and further comply with the requirements of 13 Tex. Admin. Code Chs. 25 and 26 (2002), or successor regulation. Contractor shall protect site and cultural resources from further disturbance until professional examination can be made or until clearance to proceed is authorized in writing by City Engineer.

3.19.2 Should either threatened or endangered plant or animal species be encountered,

Contractor shall cease work immediately in the area of encounter and notify City Engineer.

3.20 *CUTTING AND PATCHING*

3.20.1 Contractor is responsible for necessary cutting, fitting, and patching to accomplish the Work and shall suitably support, anchor, attach, match, and trim or seal materials to work of other contractors. Contractor shall coordinate the Work with work of other contractors to minimize conflicts, as provided in Article 6.

3.20.2 Contractor may not endanger work by cutting, digging, or other action, and may not cut or alter work of other contractors except by written consent of City Engineer and affected contractor.

3.21 *CLEANING*

3.21.1 Contractor shall perform daily cleanup of all dirt, debris, scrap materials and other disposable items resulting from Contractor's operations, whether on-site or off-site. Unless otherwise authorized in writing by City Engineer, Contractor shall keep all streets, access streets, driveways, areas of public access, walkways, and other designated areas clean and open at all times.

3.21.2 Failure of Contractor to maintain a clean site, including access streets, is the basis for City Engineer to issue a Notice of Noncompliance. Should compliance not be attained within the time period in the Notice of Noncompliance, City Engineer may authorize necessary cleanup to be performed by others and the cost of the cleanup will be deducted from monies due Contractor.

Contractor shall legally dispose off-site, all waste materials and other excess materials resulting from Contractor's operations.

3.22 *SANITATION*

3.22.1 Contractor shall provide and maintain sanitary facilities at site for use of all construction forces under the Contract. Newly-constructed or existing sanitary facilities may not be used by Contractor.

3.23 *ACCESS TO WORK AND TO INFORMATION*

3.23.1 Contractor shall provide the City, Design Consultant, testing laboratories, and governmental agencies which have jurisdictional interests, access to the Work in preparation and in progress wherever located. Contractor shall provide proper and safe conditions for the access.

3.23.2 If required by City Engineer, Contractor shall furnish information concerning character of Products and progress and manner of the Work, including information necessary to determine cost of the Work, such as number of employees, pay of employees, and time employees worked on various classes of the Work.

3.24 *TRADE SECRETS*

3.24.1 Contractor will not make any claim of ownership of trade secrets as to products used in the Work, or preparation of any mixture for the Work. City Engineer will at all times have the right to demand and Contractor shall furnish information concerning materials or samples of ingredients of any materials used, or proposed to be used, in preparation of concrete placed or other work to be done. Mixtures, once agreed on, shall not be changed in any manner without knowledge and consent of City Engineer. The City will make its best efforts to protect confidentiality of proprietary information.

3.25 *INDEMNIFICATION*

3.25.1 CONTRACTOR AGREES TO AND SHALL DEFEND, INDEMNIFY, AND HOLD THE CITY, ITS AGENTS, EMPLOYEES, OFFICERS, AND LEGAL REPRESENTATIVES (COLLECTIVELY THE "CITY") HARMLESS FOR ALL CLAIMS, CAUSES OF ACTION, LIABILITIES, FINES, AND EXPENSES (INCLUDING, WITHOUT LIMITATION, ATTORNEYS' FEES, COURT COSTS, AND ALL OTHER DEFENSE COSTS AND INTEREST) FOR INJURY, DEATH, DAMAGE, OR LOSS TO PERSONS OR PROPERTY SUSTAINED IN CONNECTION WITH OR INCIDENTAL TO PERFORMANCE UNDER THE CONTRACT INCLUDING, WITHOUT LIMITATION, THOSE CAUSED BY:

3.25.1.1 CONTRACTOR'S AND/OR ITS AGENTS', EMPLOYEES', OFFICERS', DIRECTORS', CONTRACTORS', OR SUBCONTRACTORS' (COLLECTIVELY IN NUMBERED SUBPARAGRAPHS .1 through .3, "CONTRACTOR") ACTUAL OR ALLEGED NEGLIGENCE OR INTENTIONAL ACTS OR OMISSIONS;

3.25.1.2 THE CITY'S AND CONTRACTOR'S ACTUAL OR ALLEGED CONCURRENT NEGLIGENCE, WHETHER CONTRACTOR IS IMMUNE FROM LIABILITY OR NOT;

3.25.1.3 THE CITY'S AND CONTRACTOR'S ACTUAL OR ALLEGED STRICT PRODUCTS LIABILITY OR STRICT STATUTORY LIABILITY, WHETHER CONTRACTOR IS IMMUNE FROM LIABILITY OR NOT.

CONTRACTOR SHALL DEFEND, INDEMNIFY, AND HOLD THE CITY HARMLESS DURING THE TERM OF THE CONTRACT AND FOR FOUR YEARS AFTER THE CONTRACT TERMINATES. CONTRACTOR SHALL NOT INDEMNIFY THE CITY FOR THE CITY'S SOLE NEGLIGENCE.

3.25.2 NOTWITHSTANDING ANYTHING TO THE CONTRARY, THE LIABILITY OF CONTRACTOR FOR THE CITY'S CONCURRENT NEGLIGENCE SHALL NOT EXCEED $1,000,000.

3.26 *RELEASE AND INDEMNIFICATION – PATENT, COPYRIGHT, TRADEMARK, AND TRADE SECRET INFRINGEMENT*

3.26.1 UNLESS OTHERWISE SPECIFICALLY REQUIRED BY THE CONTRACT, CONTRACTOR AGREES TO AND SHALL RELEASE AND DEFEND, INDEMNIFY, AND HOLD HARMLESS THE CITY, ITS AGENTS, EMPLOYEES, OFFICERS, AND LEGAL REPRESENTATIVES (COLLECTIVELY THE "CITY") FROM ALL CLAIMS OR CAUSES OF ACTION BROUGHT AGAINST THE CITY BY ANY PARTY, INCLUDING CONTRACTOR, ALLEGING THAT THE CITY'S USE OF ANY EQUIPMENT, SOFTWARE, PROCESS, OR DOCUMENTS CONTRACTOR FURNISHES DURING THE TERM OF THE CONTRACT INFRINGES ON A PATENT, COPYRIGHT, OR TRADEMARK, OR MISAPPROPRIATES A TRADE SECRET. CONTRACTOR SHALL PAY ALL COSTS (INCLUDING, WITHOUT LIMITATION, ATTORNEYS' FEES, COURT COSTS, AND ALL OTHER DEFENSE COSTS, AND INTEREST) AND DAMAGES AWARDED.

3.26.2 CONTRACTOR SHALL NOT SETTLE ANY CLAIM ON TERMS WHICH PREVENT THE CITY FROM USING THE EQUIPMENT, SOFTWARE, PROCESS, OR PRODUCT WITHOUT THE CITY ENGINEER'S PRIOR WRITTEN CONSENT.

3.26.3 UNLESS OTHERWISE SPECIFICALLY REQUIRED BY THE CONTRACT, WITHIN 60 DAYS AFTER BEING NOTIFIED OF THE CLAIM, CONTRACTOR SHALL, AT ITS OWN EXPENSE, EITHER:

3.26.3.1 OBTAIN FOR THE CITY THE RIGHT TO CONTINUE USING THE EQUIPMENT, SOFTWARE, PROCESS, OR PRODUCT, OR

3.26.3.2 IF BOTH PARTIES AGREE, REPLACE OR MODIFY THEM WITH COMPATIBLE AND FUNCTIONALLY EQUIVALENT PRODUCTS.

IF NONE OF THESE ALTERNATIVES IS REASONABLY AVAILABLE, THE CITY MAY RETURN THE EQUIPMENT, SOFTWARE, OR PRODUCT, OR DISCONTINUE THE PROCESS, AND CONTRACTOR SHALL REFUND THE PURCHASE PRICE.

3.27 *INDEMNIFICATION PROCEDURES*

3.27.1 *Notice of Indemnification Claims:* If the City or Contractor receives notice of any claim or circumstances which could give rise to an indemnified loss, the receiving party shall give written notice to the other Party within 10 days. The notice must include the following:

3.27.1.1 a description of the indemnification event in reasonable detail,

3.27.1.2 the basis on which indemnification may be due, and

3.27.1.3 the anticipated amount of the indemnified loss.

This notice does not estop or prevent the City from later asserting a different basis for indemnification or a different amount of indemnified loss than that indicated in the initial notice. If the City does not provide this notice within the 10-day period, it does not waive any right to indemnification except to the extent that Contractor is prejudiced, suffers loss, or incurs expense because of the delay.

3.27.2 *Defense of Indemnification Claims:*

3.27.2.1 *Assumption of Defense:* Contractor may assume the defense of the claim at its own expense with counsel chosen by it that is reasonably satisfactory to the City. Contractor shall then control the defense and any negotiations to settle the claim. Within 10 days after receiving written notice of the indemnification request, Contractor must advise the City as to whether or not it will defend the claim. If Contractor does not assume the defense, the City shall assume and control the defense, and all defense expenses constitute an indemnified loss.

3.27.2.2 *Continued Participation:* If Contractor elects to defend the claim, the City may

retain separate counsel to participate in, but not control, the defense and to participate in, but not control, any settlement negotiations. Contractor may settle the claim without the consent or agreement of the City, unless it:

3.27.2.2.1 would result in injunctive relief or other equitable remedies or otherwise require the City to comply with restrictions or limitations that adversely affect the City;

3.27.2.2.2 would require the City to pay amounts that Contractor does not fund in full; or

3.27.2.2.3 would not result in the City's full and complete release from all liability to the plaintiffs or claimants who are parties to or otherwise bound by the settlement.

3.28 ***CONTRACTOR DEBT***

IF CONTRACTOR, AT ANY TIME DURING THE TERM OF THIS AGREEMENT, INCURS A DEBT, AS THE WORD IS DEFINED IN SECTION 15-122 OF THE HOUSTON CITY CODE OF ORDINANCES, IT SHALL IMMEDIATELY NOTIFY CITY CONTROLLER IN WRITING. IF CITY CONTROLLER BECOMES AWARE THAT CONTRACTOR HAS INCURRED A DEBT, IT SHALL IMMEDIATELY NOTIFY CONTRACTOR IN WRITING. IF CONTRACTOR DOES NOT PAY THE DEBT WITHIN 30 DAYS OF EITHER SUCH NOTIFICATION, CITY CONTROLLER MAY DEDUCT FUNDS IN AN AMOUNT EQUAL TO THE DEBT FROM ANY PAYMENTS OWED TO CONTRACTOR UNDER THIS AGREEMENT, AND CONTRACTOR WAIVES ANY RECOURSE THEREFOR. CONTRACTOR SHALL FILE A NEW AFFIDAVIT OF OWNERSHIP, USING THE FORM DESIGNATED BY CITY, BETWEEN FEBRUARY 1 AND MARCH 1 OF EVERY YEAR DURING THE TERM OF THE CONTRACT.

ARTICLE 4 - ADMINISTRATION OF THE CONTRACT

4.1 *CONTRACT ADMINISTRATION*

4.1.1 City Engineer will provide administration of the Contract and City Engineer is authorized to issue Change Orders, Work Change Directives, and Minor Changes in the Work.

4.1.2 City Engineer may act through Project Manager, Design Consultant, or Inspector. When the term "City Engineer" is used in the Contract, action by City Engineer is required unless City Engineer delegates his authority in writing. The City Engineer may not delegate authority to render decisions under Section 4.4.

The City does not have control over or charge of, and is not responsible for, supervision, construction, and safety procedures enumerated in Section 3.3. The City does not have control over or charge of and is not responsible for acts or omissions of Contractor, Subcontractors, or Suppliers.

4.1.3 The City and Design Consultant may attend project meetings and visit the site to observe progress and quality of the Work. The City and Design Consultant are not required to make exhaustive or continuous on-site inspections to check quality or quantity of the Work.

4.1.4 Project Manager will review and approve or take other appropriate action on Contractor's submittals, but only for limited purpose of checking for conformance with information given and design concept expressed in the Contract.

4.1.5 Project Manager's review of the submittals is not conducted for purpose of determining accuracy and completeness of other details, such as dimensions and quantities, or for substantiating instructions for installation or performance of Products, all of which remain the responsibility of Contractor.

4.1.6 Project Manager's review of submittals does not relieve Contractor of its obligations under Sections 3.3, 3.12, and 3.18. Review does not constitute approval of safety precautions or, unless otherwise specifically stated by Project Manager in writing, of construction means, methods, techniques, sequences, or procedures. Project Manager's review of a specific item does not indicate approval of an assembly of which the item is a component.

4.1.7 Based on field observations and evaluations, Project Manager will process Contractor's progress payments, certify amounts due Contractor, and issue Certificates for Payment in the amount certified.

4.1.8 Project Manager will receive and forward to City Engineer for his review and records, written warranties and related documents required by the Contract and assembled by Contractor.

4.1.9 Upon written request by Contractor or Project Manager, City Engineer will resolve matters of interpretation of or performance of the Contract, which are not Claims. City Engineer's decisions are final and binding on the Parties.

4.1.10 City Engineer may reject work which does not conform to the Contract.

4.1.11 When City Engineer considers it necessary to implement the intent of the Contract, City Engineer may require additional inspection or testing of work in accordance with Paragraphs 13.6.3 and 13.6.4, whether such work is fabricated, Installed, or completed.

4.2 *COMMUNICATIONS IN ADMINISTRATION OF THE CONTRACT*

4.2.1 Except as otherwise provided in the Contract or when authorized by City Engineer in writing, Contractor shall communicate with Project Manager. Contractor shall communicate with Design Consultant, Design Consultant's subconsultants, and separate contractors through Project Manager. The City will communicate with Subcontractors and Suppliers through Contractor.

4.3 *CLAIMS AND DISPUTES*

4.3.1 *Documentation by Project Manager:* Contractor shall submit Claims, including those alleging an error or omission by Project Manager or Design Consultant, to Project Manager for documentation and recommendation to City Engineer.

4.3.2 *Decision of City Engineer:* Upon submission of Claim by Project Manager or Contractor, City Engineer will resolve Claims in accordance with Section 4.4.

4.3.3 *Time Limits on Claims:* Claims by Contractor must be made within 90 days after occurrence of event giving rise to the Claim.

4.3.4 *Continuing the Contract Performance:* Pending final resolution of a Claim including referral to non-binding mediation, unless otherwise agreed in writing, Contractor shall proceed diligently with the performance of the Contract and the City will continue to make payments in accordance with the Contract.

4.3.4.1 Pending final resolution of a Claim including referral to non-binding mediation, Contractor is responsible for safety and protection of physical properties and conditions at site.

4.3.5 *Claims for Concealed or Unknown Conditions:* Concealed or unknown physical conditions include utility lines, other man-made structures, storage facilities, Pollutants and Pollutant Facilities, and the like, but do not include conditions arising from Contractor operations, or failure of Contractor to properly protect and safeguard subsurface facilities. Concealed conditions also include naturally-occurring soil conditions outside the range of soil conditions identified through geotechnical investigations, but do not include conditions arising from groundwater, rain, or flood.

4.3.5.1 If conditions are encountered at the site which are Underground Facilities or otherwise concealed or unknown conditions which differ materially from:

4.3.5.1.1 those indicated by the Contract; or

4.3.5.1.2 conditions which Contractor could have discovered through site inspection, geotechnical testing, or otherwise;

then Contractor will give written notice to City Engineer no later than five days after Contractor's first observation of the condition and before condition is disturbed. Contractor's failure to provide notice constitutes a waiver of a Claim.

4.3.5.2 City Engineer will promptly investigate concealed or unknown conditions. If City Engineer determines that conditions at the site are not materially different and that no change in Contract Price or Contract Time is justified, City Engineer will notify Contractor in writing, stating reasons. If City Engineer determines the conditions differ materially and cause increase or decrease in Contractor's cost or time required for performance of part of the Work, City Engineer will recommend an adjustment in Contract Price or Contract Time, or both, as provided in Article 7. Opposition by a Party to the City Engineer's determination must be made within 21 days after City Engineer has given notice of the decision. If the Parties cannot agree on adjustment to Contract Price or Contract Time, adjustment is subject to further proceedings pursuant to Section 4.4.

4.3.6 *Claims for Additional Cost:* If Contractor wishes to make a Claim for increase in Contract Price, Contractor shall give written notice before proceeding with work for which Contractor intends to submit a Claim. Prior notice is not required for Claims relating to an emergency

endangering life or property arising under Section 10.4.

4.3.6.1 Contractor may file a Claim in accordance with Section 4.4 if Contractor believes it has incurred additional costs, for the following reasons:

- 4.3.6.1.1 written interpretation of City Engineer;
- 4.3.6.1.2 order by City Engineer to stop the Work when Contractor is not at fault;
- 4.3.6.1.3 suspension of the Work by City Engineer;
- 4.3.6.1.4 termination of the Contract by City Engineer; or
- 4.3.6.1.5 The City's non-compliance with another provision of the Contract.

4.3.6.2 No increase in Contract Price is allowed for delays or hindrances to the Work, except for direct and unavoidable extra costs to Contractor caused by failure of the City to provide information and services, or to make land and materials available, when required of the City under the Contract. Any increase claimed is subject to the provisions of Section 4.4 and Article 7.

4.3.6.3 The City is not liable for Claims for delay when Date of Substantial Completion occurs prior to expiration of Contract Time.

4.3.7 *Claims for Additional Time:* If Contractor wishes to make a Claim for an increase in Contract Time, Contractor shall give written notice as provided in Section 8.2. In case of continuing delay, only one Claim is necessary.

4.4 *RESOLUTION OF CLAIMS AND DISPUTES*

4.4.1 City Engineer will review Claims and take one or more of the following preliminary actions within 30 days of receipt of Claim:

- 4.4.1.1 submit a suggested time to meet and discuss the Claim with City Engineer;
- 4.4.1.2 reject Claim, in whole or in part, stating reasons for rejection;
- 4.4.1.3 recommend approval of the Claim by the other Party;
- 4.4.1.4 suggest a compromise; or
- 4.4.1.5 take other actions as City Engineer deems appropriate to resolve the Claim.

4.4.2 City Engineer may request additional supporting data from claimant. Party making Claim shall, within 10 days after receipt of City Engineer's request, submit additional supporting data requested by City Engineer.

4.4.3 At any time prior to rendering a written decision regarding a Claim, City Engineer may refer Claim to non-binding mediation. If Claim is resolved, City Engineer will prepare and obtain all appropriate documentation. If Claim is not resolved, City Engineer will take receipt of Claim and begin a new review under Section 4.4.

4.4.4 If Claim is not referred to or settled in non-binding mediation, City Engineer may conduct a hearing and will render a written decision, including findings of fact, within 75 days of receipt of Claim, or a time mutually agreed upon by the Parties in writing. City Engineer may notify Surety and request Surety's assistance in resolving Claim. City Engineer's decision is final and binding on the Parties.

4.5 *CONDITION PRECEDENT TO SUIT; WAIVER OF ATTORNEY FEES AND INTEREST*

4.5.1 Neither the City nor Contractor may recover attorney fees for any claim brought in connection with this Contract.

4.5.2 Neither the City nor the Contractor may recover interest for any damages claim brought in connection with this Contract except as allowed by TEXAS LOCAL GOVERNMENT CODE Chapter 2251.

4.6 *INTERIM PAYMENT WAIVER & RELEASE*

4.6.1 In accordance with section 4.3, the Contractor shall use due diligence in the discovery and submission of any Claim against the City related to the Contractor's work.

4.6.2 The Contractor shall submit any Claim to the City not later than the 90th day after the occurrence of the event giving rise to the Claim.

4.6.3 Any failure to timely comply with the requirements of section 4.6.2 waives and releases any Claim when the Contractor submits an application for payment after the 90th day.

4.6.4 This waiver does not cover any retainage. In case of any conflict of law, this language shall be revised to the minimum extent necessary to avoid legal conflict. This waiver is made specifically for the benefit of the City.

ARTICLE 5 - SUBCONTRACTORS AND SUPPLIERS

5.1 *AWARD OF SUBCONTRACTS OTHER CONTRACTS FOR PORTIONS OF THE WORK*

5.1.1 Contractor may not contract with a Subcontractor, Supplier, person, or entity that City Engineer has made a reasonable and timely objection to.

5.1.2 If City Engineer has a reasonable objection to person or entity proposed by Contractor, Contractor shall propose another with whom City Engineer has no reasonable objection.

5.1.3 Contractor shall execute contracts with approved Subcontractors, Suppliers, persons, or entities before the Subcontractors or Suppliers begin work under the Contract. All such contracts must be executed and sent to the OBO Director and Contracting Department within 30 days after the date of the Notice to Proceed and must include provisions set forth in Articles 3 and 5 of this Document.

5.1.4 Contractor shall notify City Engineer in writing of any proposed change of Subcontractor, Supplier, person, or entity previously accepted by the City.

5.1.5 Contractor shall make timely payments to Subcontractors and Suppliers for performance of the Contract. Contractor shall protect, defend, and indemnify the City from any claim or liability arising out of Contractor's failure to make the payments. Disputes relating to payment of Business Enterprise Subcontractors or Suppliers will be submitted to arbitration in same manner as other disputes under Business Enterprise subcontracts. Failure of Contractor to comply with decisions of arbitrator may be determined by City Engineer a material breach leading to termination of the Contract.

5.2 *CONTRACTOR RESPONSIBILITY FOR SUBCONTRACTORS*

5.2.1 Contractor is responsible to the City, as may be required by laws and regulations, for all acts and omissions of Subcontractors, Suppliers, and other persons and organizations performing or furnishing any of the Work under direct or indirect contract with Contractor.

5.2.2 Contractor shall make available to each proposed Subcontractor, prior to execution of subcontract, copies of the Contract to which Subcontractor is bound by this Section 5.2. Contractor shall notify Subcontractor of any terms of proposed subcontract which may be at variance with the Contract.

5.2.3 The City's approval of Subcontractor or Suppliers does not relieve Contractor of its obligation to perform, or to have performed to the full satisfaction of the City, the Work required by the Contract.

5.2.4 Unless there is a contractual relationship between Contractor and a Subcontractor or Supplier to the contrary, Contractor shall withhold no more retainage from Subcontractors or Suppliers than City withholds from Contractor under this Agreement. However, once a Subcontractor or Supplier completes performance, Contractor shall release all retainage to that Subcontractor or Supplier regardless if City continues to retain under this Agreement.

5.2.5 Prior to a Subcontractor or Supplier commencing performance for Contractor, Contractor shall meet with that Subcontractor or Supplier to provide instructions on invoicing procedures, dispute resolution procedures, and statutory rights, such as claim filing procedures under the McGregor Act. Subcontractors and Suppliers must certify to the City Engineer that Contractor has fulfilled the requirements of this Section.

ARTICLE 6 - CONSTRUCTION BY THE CITY OR BY SEPARATE CONTRACTORS

6.1 *THE CITY'S RIGHT TO PERFORM CONSTRUCTION AND TO AWARD SEPARATE CONTRACTS*

6.1.1 The City may perform on-site construction operations related to the Work and as part of the Project with the City's workforce or with separate contractors.

6.2 *COORDINATION*

6.2.1 The City will coordinate activities of the City's workforce and of each separate contractor with work of Contractor, and Contractor shall cooperate with the City and separate contractors.

6.2.1.1 Contractor shall participate with other separate contractors and the City in reviewing their construction schedules when directed to do so by the Project Manager. Contractor shall make revisions to construction schedule and Contract Price deemed

necessary after joint review and mutual agreement. Construction schedules shall then constitute schedules to be used by Contractor, separate contractors, and the City, until subsequently revised.

6.2.2 Contractor shall afford to the City and to separate contractors reasonable opportunity for introduction and storage of their materials and equipment, and for performance of their activities.

6.2.3 If part of Contractor's work depends on proper execution of construction or operations by the City or a separate contractor, Contractor shall, prior to proceeding with that portion of the Work, inspect the other work and promptly report to City Engineer apparent discrepancies or defects in the other construction that would render it unsuitable for the proper execution of the Work. Failure of Contractor to report apparent discrepancies or defects in the other construction shall constitute acknowledgment that the City's or separate contractor's completed or partially completed construction is fit and proper to receive Contractor's work, except as to discrepancies or defects not then reasonably discoverable.

6.3 *MUTUAL RESPONSIBILITY*

6.3.1 The responsible party bears the costs caused by delays, by improperly timed activities, or by nonconforming construction.

6.3.2 Contractor shall promptly remedy damage caused by Contractor to completed or partially completed construction or to property of the City or separate contractor.

6.3.3 Claims or disputes between Contractor and other City contractors, or subcontractors of other City contractors, working on the Project must be submitted to binding arbitration in accordance with Construction Industry Arbitration Rules of the American Arbitration Association upon demand by any party to the dispute or by the City.

6.4 *THE CITY'S RIGHT TO CLEAN UP*

6.4.1 If dispute arises among Contractor, separate contractors, and the City as to responsibility under their respective contracts for maintaining premises and surrounding area free from waste materials and rubbish as described in Section 3.21, the City may clean up and allocate cost among those responsible, as determined by City Engineer.

ARTICLE 7 - CHANGES IN THE WORK

7.1 *CHANGES*

7.1.1 Changes in scope of the Work, subject to limitations in Article 7 and elsewhere in the Contract, may be accomplished without invalidating the Contract, or without notifying Surety by:

- 7.1.1.1 Change Order;
- 7.1.1.2 Work Change Directive; or
- 7.1.1.3 Minor Change in the Work.

7.1.2 The following types of Change Orders require City Council approval:

- 7.1.2.1 a single Change Order that exceeds five percent of Original Contract Price,
- 7.1.2.2 a Change Order which, when added to previous Change Orders, exceeds five percent of Original Contract Price,
- 7.1.2.3 a Change Order, in which the total value of increases outside of the general scope of work approved by City Council, when added to increases outside the general scope of work approved by City Council in previous Change Orders, exceeds 40 percent of the Original Contract Price, even if the net increase to the Original Contract Price is five percent or less.

  In this context, "increase" means an increase in quantity resulting from the addition of locations not within the scope of work approved by City Council, or the addition of types of goods or services not bid as unit price items.

Nothing in this Section is intended to permit an increase of the Contract Price in excess of the limit set out in TEX. LOC. GOV'T CODE ANN. §252.048 or its successor statute.

7.1.3 Contractor shall proceed promptly to execute changes in the Work provided in Modifications, unless otherwise stated in the Modification.

7.2 *WORK CHANGE DIRECTIVES*

7.2.1 A Work Change Directive cannot change Contract Price or Contract Time, but is evidence that the Parties agree that a change, ordered by directive, will be incorporated in a subsequently issued Change Order as to its effect, if any, on Contract Price or Contract Time.

7.2.2 Failure by Contractor to commence work identified in a Work Change Directive within the time specified by City Engineer, or to complete the

work in a reasonable period of time, may be determined by City Engineer to be a material breach of Contract.

7.2.3 A Work Change Directive is used in the absence of total agreement of the terms of a Change Order. Interim payments are made in accordance with Paragraph 9.6.1.

7.2.4 If Contractor signs a Work Change Directive, then Contractor agrees to its terms including adjustment in Contract Price and Contract Time or method for determining them. Agreement by the Parties to adjustments in Contract Price and Contract Time are immediately recorded as a Change Order.

7.2.5 City Engineer, by Work Change Directive, may direct Contractor to take measures as necessary to expedite construction to achieve Date of Substantial Completion on or before expiration of Contract Time. When the Work is expedited solely for convenience of the City and not due to Contractor's failure to prosecute timely completion of the Work, then Contractor is entitled to an adjustment in Contract Price equal to actual costs determined in accordance with Article 7.

7.3 *ADJUSTMENTS IN CONTRACT PRICE*

7.3.1 Adjustments in Contract Price are accomplished by Change Order and are based on one of the following methods:

- 7.3.1.1 mutual acceptance of fixed price, properly itemized and supported by sufficient data to permit evaluation;
- 7.3.1.2 unit prices stated in the Contract or subsequently agreed upon;
- 7.3.1.3 cost to be determined in a manner agreed upon by the Parties and mutually acceptable fixed or percentage fee; or
- 7.3.1.4 as provided in Paragraph 7.3.2.

7.3.2 If Contractor does not agree with a change in Contract Price or Contract Time or the method for adjusting them specified in the Work Change Directive within 21 days from date of the Work Change Directive's issuance, method and adjustment are determined by City Engineer. If Project Manager or Contractor disagree with City Engineer's determination they then may file a Claim in accordance with Section 4.4.

7.3.2.1 If City Engineer determines a method and adjustment in Contract Price under Paragraph 7.3.2, Contractor shall provide, in a form as City Engineer may prescribe, appropriate supporting data for items submitted under Paragraph 7.3.2. Failure to submit the data within 21 days of request for the data by City Engineer shall constitute waiver of a Claim.

7.3.2.2 Unless otherwise provided in the Contract, costs for the purposes of this Paragraph 7.3.2 are limited to the following:

- 7.3.2.2.1 costs of labor, including labor burden as stated below for social security, unemployment insurance, customary and usual fringe benefits required by agreement or custom, and Workers' Compensation insurance;
  - 7.3.2.2..1.1 the maximum labor burden applied to costs of labor for changes in the Work is 55 percent;
- 7.3.2.2.2 costs of materials, supplies, and equipment, including cost of transportation, whether incorporated or consumed;
- 7.3.2.2.3 rental costs of machinery and equipment, exclusive of hand tools, whether rented from Contractor or others, with prior approval of City Engineer;
- 7.3.2.2.4 costs of premiums for Bonds and insurance and permit fees related to the change in the Work;
- 7.3.2.2.5 additional costs of direct supervision of work and field office personnel directly attributable to the change; and
- 7.3.2.2.6 allowances for overhead and profit as stated below.
  - 7.3.2.2.6.1 the maximum allowances for overhead and profit on increases due to Change Orders:
  - 7.3.2.2.6.2 for changes in the Work performed by Contractor and Subcontractors, allowance for overhead and profit are applied to an amount equal to cost of all additions less cost of all deletions to the Work. Allowance for overhead to Contractor and first tier Subcontractors on changes performed by Subcontractors are applied to an amount equal to the sum of all increases to the Work by applicable Subcontractors.

	Overhead	Profit
to Contractor for change in the Work performed by Subcontractors:	10 percent	0 percent
to first tier Subcontractors for change in the Work performed by its Subcontractors:	10 percent	0 percent
to Contractor and Subcontractor for change in the Work performed by their respective firms:	10 percent	5 percent

7.3.3 If the City deletes or makes a change, which results in a net decrease in Contract Price, the City is entitled to a credit calculated in accordance with Paragraphs 7.3.1 and 7.3.2 and Subparagraphs 7.3.2.1, and 7.3.2.2.1 through 7.3.2.2.5. When both additions and credits covering related work or substitutions are involved in a change, allowance for overhead and profit is figured on the basis of a net increase, if any, with respect to that change in accordance with Subparagraph 7.3.2.2.6.

7.3.4 When Contractor agrees with the determination made by City Engineer concerning adjustments in Contract Price and Contract Time, or the Parties otherwise reach agreement upon the adjustments, the agreement will be immediately recorded by Change Order.

7.4 *MINOR CHANGES IN THE WORK*

7.4.1 A Minor Change in Work is binding on the Parties. Contractor shall acknowledge, in a written form acceptable to City Engineer, that there is no change in Contract Time or Contract Price and shall carry out the written orders promptly.

ARTICLE 8 - TIME

8.1 *PROGRESS AND COMPLETION*

8.1.1 Time is of the essence in the Contract. By executing the Contract, Contractor agrees that Contract Time is a reasonable period for performing the Work.

8.1.2 *Computation of Time:* In computing any period of time prescribed or allowed by the General Conditions, the day of the act, event, or default after which designated period of time begins to run is not to be included. Last day of the period so computed is to be included, unless it is a Sunday or Legal Holiday, in which event the period runs until end of next day which is not a Sunday or Legal Holiday. Sundays and Legal Holidays are considered to be days and are to be included in all other time computations relative to Contract Time.

8.1.3 Contractor may not commence the Work prior to the effective date of insurance and Bonds required by Article 11.

8.1.4 Contractor shall proceed expeditiously and without interruption, with adequate forces, and shall achieve Date of Substantial Completion within Contract Time.

8.1.5 Should progress of the Work fall behind construction schedule, except for reasons stated in Paragraph 8.2.1, Contractor shall promptly submit at the request of Project Manager, updated construction schedule to City Engineer for approval. Contractor's failure to submit updated schedule may, at City Engineer's discretion, constitute a material breach of the Contract. Contractor shall take action necessary to restore progress by working the hours, including night shifts and lawful overtime operations as necessary, to achieve Date of Substantial Completion within Contract Time.

8.1.6 Except in connection with safety or protection of persons or the Work or property at the site or adjacent to the site, and except as otherwise indicated in the Contract, all the Work at the site will be performed Monday through Saturday between the hours of 7:00 a.m. and 7:00 p.m. Contractor may not perform work between 7:00 p.m. and 7:00 a.m., on a Sunday, or on a Legal Holiday, without giving City Engineer 24-hour prior written notice and receiving written consent of City Engineer.

8.2 *DELAYS AND EXTENSIONS OF TIME*

8.2.1 Contractor may request extension of Contract Time for a delay in performance of work that arises from causes beyond control and without fault or negligence of Contractor. Examples of these causes are:

- 8.2.1.1 acts of God or of the public enemy;
- 8.2.1.2 acts of government in its sovereign capacity;
- 8.2.1.3 fires;
- 8.2.1.4 floods;
- 8.2.1.5 epidemics;
- 8.2.1.6 quarantine restrictions;
- 8.2.1.7 strikes;
- 8.2.1.8 freight embargoes;
- 8.2.1.9 unusually severe weather; and
- 8.2.1.10 discovery of Pollutants or Pollutant Facilities at the site.

8.2.2 For any reason other than those listed in Section 4.3.6.2, if the Contractor's work is delayed in any manner or respect, the Contractor shall have no claim for damages and shall have no right of additional compensation from the City by reason of any delay or increased expense to the Contractor's work, except for an extension of time as provided in this provision.

8.2.3 Contractor may request an extension of Contract Time for delay only if:

8.2.3.1 delay is caused by failure of Subcontractor or Supplier to perform or make progress; and

8.2.3.2 cause of failure is beyond control of both Contractor and Subcontractor or Supplier.

8.2.4 Claims relating to Contract Time must be made in accordance with Paragraph 4.3.7.

8.2.5 Claims for extending or shortening Contract Time are based on written notice promptly delivered by the Party making Claim to other Party. Claim must accurately describe occurrence generating Claim, and a statement of probable effect on progress of the Work.

8.2.6 Claims for extension of Contract Time are considered only when a Claim is filed within the time limits stated in Paragraph 4.3.3.

8.2.6.1 Notwithstanding paragraph 4.3.3, an extension of time for delays under this paragraph may be granted only upon written application by the Contractor within 48 hours from the claimed delay.

8.2.7 Written notice of Claim must be accompanied by claimant's written statement that adjustment claimed is entire adjustment to which claimant is entitled as a result of the occurrence of the event. When the Parties cannot agree, Claims for adjustment in Contract Time are determined by City Engineer in accordance with Section 4.4.

8.2.8 Adjustments to Contract Time are accomplished by Change Order.

ARTICLE 9 - PAYMENTS AND COMPLETION

9.1 *UNIT PRICE WORK*

9.1.1 Where the Contract provides that all or part of the Work is based on Unit Prices, the Original Contract Price includes, for all Unit Price work, an amount equal to the sum of Unit Prices times Unit Price Quantities for each separately identified item of Unit Price work.

9.1.2 Each Unit Price includes an amount to cover Contractor's overhead and profit for each separately identified item.

9.1.3 The Contractor may not make a Claim against the City for excess or deficiency in Unit Price Quantities provided in the Contract, except as provided in Subparagraph 9.1.4. Payment at the prices stated in the Contract is in full for the completed work. Contractor is not entitled to additional payment for materials, supplies, labor, tools, machinery and all other expenditures incidental to satisfactory completion of the Work.

9.1.4 City Engineer may increase or decrease quantities of the Work within limitations stated in Paragraph 7.1.2. Contractor is entitled to payment for actual quantities of items provided at Unit Prices set forth in the Contract.

9.1.5 Where the final quantity of work performed by Contractor on Major Unit Price Work item differs by more than 25 percent from quantity of the item stated in the Contract, a Party may request an adjustment in Unit Price, for the portion that differs by more than 25 percent, by a Change Order under Section 7.3.

9.2 *ESTIMATES FOR PAYMENT, UNIT PRICE WORK*

9.2.1 Following the day of each month indicated in the Contract, Project Manager will prepare a Certificate for Payment for the preceding monthly period based on estimated units of work completed. Prior to preparing Certificate of Payment, Contractor shall have submitted to City Engineer, on a form approved by the Director of the Office of Business Opportunity, evidence satisfactory to the City Engineer of payments made to Subcontractors and Suppliers for the month preceding the month for which the Certificate for Payment is prepared, including evidence of electronic submission of certified payrolls.

9.2.2 Before final completion, City Engineer will review and confirm with Contractor the actual final installed Unit Price quantities. City Engineer's determination of actual final installed Unit Price quantities will be included in the final Certificate for Payment and any previous underpayments and overpayments will be reconciled with the actual final Unit Price quantities. Contractor shall file written notice of intent to appeal, if any, City Engineer's

determination within 10 days of receipt of final Certificate for Payment. Upon expiration of the 10-day period, City Engineer's decision is final and binding on the Parties. If Contractor submits notice within the 10-day period, Contractor shall submit a Claim in accordance with Section 4.4.

9.3 *STIPULATED PRICE WORK*

9.3.1 For work contracted on a Stipulated Price basis, 10 days before submittal of first Application for Payment, Contractor shall submit to City Engineer a Schedule of Values allocated to various portions of the Work, prepared in the form and supported by the data as City Engineer may require to substantiate its accuracy. This schedule, as approved by City Engineer, is used as a basis for approval of Contractor's Applications for Payment.

9.4 *APPLICATIONS FOR PAYMENT, STIPULATED PRICE WORK*

9.4.1 For work contracted on a Stipulated Price basis, Contractor shall submit Applications for Payment to City Engineer each month on a form acceptable to City Engineer in accordance with Schedule of Values. Application must indicate percentages of completion of each portion of the Work listed in Schedule of Values as of the end of the period covered by the Application for Payment.

9.4.2 Applications for Payment must be supported by substantiating data as City Engineer may require and must reflect retainages as provided below. Evidence satisfactory to the City Engineer of payments made to Subcontractors and Suppliers for the month preceding the month for which the Application for Payment is submitted must accompany each Application for Payment on a form approved by the Director of the Office of Business Opportunity. Evidence of electronic submission of certified payrolls must be included. Application must be sworn and notarized.

9.5 *CERTIFICATES FOR PAYMENT*

9.5.1 City Engineer will, within 10 days after the date specified in the Contract for Unit Price work, or upon receipt of Contractor's Application for Payment for Stipulated Price work, issue a Certificate for Payment for work based on amount which City Engineer determines is properly due, with copy to Contractor.

9.5.2 Unless otherwise provided in the Contract, payment for completed work and for properly stored Products is conditioned upon compliance with procedures satisfactory to City Engineer to protect the City's interests. Procedures will include applicable insurance, storage, and transportation to site for materials and equipment stored off-site. Contractor is responsible for maintaining materials and equipment until Date of Substantial Completion.

9.5.3 Contractor shall document its use of Ultra Low Sulfur Diesel Fuel by providing invoices and receipts evidencing Contractor's use.

9.6 *COMPUTATIONS OF CERTIFICATES FOR PAYMENT*

9.6.1 Subject to the provisions of the Contract, the amount of each Certificate for Payment is calculated as follows:

- 9.6.1.1 that portion of Contract Price allocated to completed work as determined by:
  - 9.6.1.1.1 multiplying the percentage of completion of each portion of the Work listed in the Schedule of Values by the value of that portion of the Work, or
  - 9.6.1.1.2 multiplying Unit Price quantities Installed times the Unit Prices listed in the Contract;
- 9.6.1.2 plus progress payments for completed work that has been properly authorized by Modifications;
- 9.6.1.3 less retainage of five percent;
- 9.6.1.4 plus actual costs, properly substantiated by certified copies of invoices and freight bills, of non-perishable materials and equipment delivered and properly stored, if approved in advance by Project Manager, less 15 percent;
- 9.6.1.5 less any previous payments by the City.

9.7 *DECISIONS TO WITHHOLD CERTIFICATION*

9.7.1 City Engineer may decline to certify payment and may withhold payment in whole or in part to the extent reasonably necessary to protect the City if, in City Engineer's opinion, there is reason to believe that:

- 9.7.1.1 nonconforming work has not been remedied;
- 9.7.1.2 the Work cannot be completed for unpaid balance of Contract Price;
- 9.7.1.3 there is damage to the City or another contractor;
- 9.7.1.4 the Work will not be completed within Contract Time and that unpaid balance

will not be adequate to cover actual and liquidated damages;

9.7.1.5 probable evidence that third party claims will be filed in court, in arbitration, or otherwise;

9.7.1.6 Contractor has failed to make payments to Subcontractors or Suppliers for labor, material, or equipment; or

9.7.1.7 Contractor has persistently failed to carry out work in accordance with the Contract.

9.7.1.8 Contractor has not paid Subcontractors or Suppliers because of a payment dispute; or

9.7.1.9 Contractor has failed to provide satisfactory evidence described in Paragraphs 9.2.1, 9.4.2, and 9.8.2.

9.7.2 When the above reasons for withholding certification are removed, certification will be made for amounts previously withheld.

9.7.3 City Engineer may decline to certify payment and may withhold request for payment in whole or in part upon failure of Contractor to submit initial construction schedule or monthly schedule updates, as required in Paragraphs 3.15.1 and 3.15.3.

9.8 *PROGRESS PAYMENTS*

9.8.1 The City will make payment, in an amount certified by City Engineer, within 20 days after City Engineer has issued a Certificate for Payment.

9.8.2 The City has no obligation to pay or to facilitate the payment to a Subcontractor or Supplier, except as may otherwise be required by law. Contractor shall comply with the prompt payment requirements of Chapter 2251 of the Government Code. State law requires payment of Subcontractors and Suppliers by Contractor within 7 calendar days of Contractor's receipt of payment from the City, unless there is a payment dispute between Contractor and a Subcontractor or Supplier evidenced on a form approved by the Director of Mayor's Office of Business Opportunity and submitted to the City Engineer each month with Application for Payment or Estimate for Payment. **CONTRACTOR SHALL DEFEND AND INDEMNIFY THE CITY FROM ANY CLAIMS OR LIABILITY ARISING OUT OF CONTRACTOR'S FAILURE TO MAKE THESE PAYMENTS.**

9.8.2.1 The City may, upon request and at the discretion of City Engineer, furnish to Subcontractor information regarding percentages of completion or the amounts applied for by Contractor, and action taken thereon by the City because of work done by the Subcontractor.

9.8.2.2 Contractor shall prepare and submit to City Engineer a Certification of Payment to Subcontractors and Suppliers form to be attached to each monthly Estimate for Payment or Application for Payment.

9.8.3 A Certificate for Payment, a progress payment, or partial or entire use or occupancy of the Work by the City, does not constitute acceptance of work which is not in accordance with the Contract.

9.9 *DATE OF SUBSTANTIAL COMPLETION*

9.9.1 When Contractor considers the Work, or a portion thereof designated by City Engineer, to be substantially complete, Contractor shall prepare and submit to Project Manager a comprehensive punch list of items to be completed or corrected. Failure to include an item on the punch list does not alter the responsibility of Contractor to comply with the Contract.

9.9.1.1 By submitting the punch list to Project Manager, Contractor represents that work on the punch list will be completed within the time provided for in Subparagraph 9.9.4.3.

9.9.2 Upon receipt of Contractor's punch list, Project Manager will inspect the Work, or designated portion thereof, to verify that the punch list contains all items needing completion or correction. If Project Manager's inspection discloses items not on Contractor's punch list, the items must be added to the punch list of items to be completed or corrected. If Project Manager's inspection reveals that Contractor is not yet substantially complete, Contractor shall complete or correct the deficiencies and request another inspection by Project Manager. The City may recover the costs of re-inspection from Contractor.

9.9.3 Prior to City Engineer's issuing a Certificate of Substantial Completion, Contractor shall also provide:

9.9.3.1 Certificate of Occupancy for new construction, or Certificate of Compliance for remodeled work, as applicable, and

9.9.3.2 compliance with Texas Accessibility Standards through state inspection of the Work, if required. If Contractor calls for inspection in a timely manner and the inspection is delayed through no fault of Contractor, and City Engineer so confirms, City Engineer may, upon request by Contractor, add the inspection to the punch list in Paragraph 9.9.2 and issue a Certificate of Substantial Completion.

9.9.4 When the Work, or designated portion thereof, is determined by City Engineer to be sufficiently complete in accordance with the Contract so the City can occupy or utilize the Work, or designated portion thereof, for the purpose for which it is intended, City Engineer will prepare a Certificate of Substantial Completion that incorporates the punch list in Paragraph 9.9.2 and establishes:

9.9.4.1 Date of Substantial Completion;

9.9.4.2 responsibilities of the Parties for security, maintenance, heating, ventilating and air conditioning, utilities, damage to the Work, and insurance; and

9.9.4.3 fixed time within which Contractor shall complete all items on punch list of items to be corrected accompanying the certificate.

9.9.5 Warranties required by the Contract shall commence on the Date of Substantial Completion unless otherwise provided by City Engineer in Certificate of Substantial Completion. Warranties may not commence on items not substantially completed.

9.9.6 After Date of Substantial Completion and upon application by Contractor and approval by City Engineer, the City may make payment, reflecting adjustment in retainage, if any, as follows:

9.9.6.1 with the consent of Surety, the City may increase payment to Contractor to 96 percent of Contract Price, less value of items to be completed and accrued liquidated damages.

9.9.7 Contractor shall complete or correct the items in Paragraph 9.9.2 within the time period set out in the Certificate of Substantial Completion. If Contractor fails to do so, the City may issue a Notice of Noncompliance and proceed according to Section 2.5.

9.10 *PARTIAL OCCUPANCY OR USE*

9.10.1 The City may occupy or use any completed or partially completed portion of the Work at any stage, provided the occupancy or use is consented to by Contractor and Contractor's insurer and authorized by public authorities having jurisdiction over the Work. Consent of Contractor to partial occupancy or use may not be unreasonably withheld.

9.10.2 Immediately prior to the partial occupancy or use, Project Manager and Contractor shall jointly inspect the area to be occupied or portion of the Work to be used to determine and record condition of the Work.

9.10.3 Partial occupancy or use of a portion of the Work does not constitute acceptance of work not in compliance with requirements of the Contract.

9.11 *FINAL COMPLETION AND FINAL PAYMENT*

9.11.1 Contractor shall review the Contract and inspect the Work prior to Contractor notification to City Engineer that the Work is complete and ready for final inspection. Contractor shall submit affidavit that the Work has been inspected and that the Work is complete in accordance with requirements of the Contract.

9.11.2 Project Manager will make final inspection within 15 days after receipt of Contractor's written notice that the Work is ready for final inspection and acceptance. If Project Manager finds the Work has been completed in accordance with the Contract, Contractor shall submit items set out in Paragraph 9.11.4 and, for stipulated price contracts, a final Application for Payment. City Engineer will, within 10 days, issue Certificate of Final Completion stating that to the best of City Engineer's knowledge, information, and belief, the Work has been completed in accordance with the Contract, and will recommend acceptance of the Work by City Council.

9.11.3 Should work be found not in compliance with requirements of the Contract, City Engineer will notify Contractor in writing of items of noncompliance. Upon inspection and acceptance of the corrections by Project Manager, compliance with all procedures of Paragraph 9.11.2, and Contractor's submission of the items set out in Paragraph 9.11.4, the City Engineer will issue Certificate of Final Completion to Contractor as provided in Paragraph 9.11.2.

9.11.4 Contractor shall submit the following items to City Engineer before City Engineer will issue a Certificate of Final Completion:

9.11.4.1 affidavit that payrolls, invoices for materials and equipment, and other indebtedness of Contractor connected

with the Work, less amounts withheld by the City, have been paid or otherwise satisfied. If required by City Engineer, Contractor shall submit further proof including waiver or release of lien or claims from laborers or Suppliers of Products;

9.11.4.2 certificate evidencing that insurance required by the Contract to remain in force after final payment is currently in effect, will not be canceled or materially changed until at least 30 days written notice has been given to the City;

9.11.4.3 written statement that Contractor knows of no substantial reason that insurance will not be renewable to cover correction and warranty period required by the Contract;

9.11.4.4 consent of Surety to final payment; and

9.11.4.5 copies of record documents, maintenance manuals, tests, inspections, and approvals.

Upon City Engineer's issuance of a Certificate of Final Completion, Contractor may request increase in payment to 99 percent of Contract Price, less accrued liquidated damages.

9.11.5 If Contractor fails to submit required items in Paragraph 9.11.4 within 10 days of Project Manager's inspection of the Work under Paragraph 9.11.2 or Paragraph 9.11.3, City Engineer may, but is not obligated to:

9.11.5.1 deduct liquidated damages accrued from monies held;

9.11.5.2 proceed to City Council for acceptance of the Work, minus some or all of the items Contractor fails to submit under Paragraph 9.11.4; and,

9.11.5.3 upon acceptance by City Council of the portion of the Work completed, make final payment as set out in Paragraph 9.11.8.

9.11.6 If final completion is materially delayed through no fault of Contractor, or by issuance of Change Orders affecting date of final completion, and City Engineer so confirms, the City may, upon application by Contractor and certification by City Engineer, and without terminating the Contract, make payment of balance due for that portion of the Work fully completed and accepted.

9.11.7 If remaining balance due for work not corrected is less than retainage stipulated in the Contract, Contractor shall submit to City Engineer written consent of Surety to payment of balance due for that portion of the Work fully completed and accepted, prior to certification of the payment. The payment is made under terms governing final payment, except that it does not constitute waiver of Claims.

9.11.8 The City will make final payment to Contractor within 30 days after acceptance of the Work by City Council, subject to limitations, if any, as stated in the Contract.

9.11.9 Acceptance of final payment by Contractor shall constitute a waiver of all Claims, whether known or unknown, by Contractor, except those previously made in writing and identified by Contractor as unsettled at time of final Application for Payment.

9.12 *LIQUIDATED DAMAGES*

9.12.1 Contractor, Surety, and the City agree that failure to complete the Work within Contract Time will cause damages to the City and that actual damages from harm are difficult to estimate accurately. Therefore, Contractor, Surety, and the City agree that Contractor and Surety are liable for and shall pay to the City the amount stipulated in Supplementary Conditions as liquidated damages, and that the amount of damages fixed therein is a reasonable forecast of just compensation for harm to the City resulting from Contractor's failure to complete the Work within Contract Time. The amount stipulated will be paid for each day of delay beyond Contract Time until Date of Substantial Completion.

9.12.2 Contractor shall pay the City an amount equal to $1,200.00 per diesel operating vehicle or piece of motorized equipment per incident of high sulfur diesel fuel usage.

ARTICLE 10 - SAFETY PRECAUTIONS

10.1 *SAFETY PROGRAMS*

10.1.1 Contractor is responsible for initiating, maintaining, and supervising all safety precautions and programs in connection with performance of the Contract. Contractor shall submit a safety program to City Engineer prior to mobilizing for the Work, and is solely responsible for safety, efficiency, and adequacy of ways, means, and methods, and for damage which might result from failure or improper construction, maintenance, or operation performed by Contractor.

10.2 *POLLUTANTS AND POLLUTANT FACILITIES*

10.2.1 If Contractor encounters material on-site which it reasonably believes to be a Pollutant or facilities which it reasonably believes to be a Pollutant Facility, Contractor shall immediately stop work in affected area and immediately notify City Engineer, confirming the notice thereafter in writing.

10.2.2 If City Engineer determines that the material is a Pollutant or facility is a Pollutant Facility, work in affected area may not be resumed except by Modification, and only if the work would not violate applicable laws or regulations.

10.2.3 If City Engineer determines that the material is not a Pollutant or a facility is not a Pollutant Facility, work in affected area will be resumed upon issuance of a Modification.

10.2.4 Contractor is not required to perform, unless authorized by Change Order, work relating to Pollutants or Pollutant Facilities except for that work relating to Pollutants or Pollutant Facilities specified in the Contract.

10.3 *SAFETY OF THE ENVIRONMENT, PERSONS, AND PROPERTY*

10.3.1 Contractor shall take reasonable precautions for safety and shall provide reasonable protection to prevent damage, injury, or loss from all causes, to:

10.3.1.1 employees performing work on-site, and other persons who may be affected thereby;

10.3.1.2 work, including Products to be incorporated into the Work, whether in proper storage, under control of Contractor or Subcontractor; and

10.3.1.3 other property at or adjacent to the site, such as trees, shrubs, lawns, walks, pavements, roadways, structures, utilities, and Underground Facilities not designated for removal or replacement in course of construction.

10.3.2 Contractor shall give notices and comply with applicable laws, ordinances, rules, regulations, and lawful orders of public authorities bearing on safety of persons, property, or environment.

10.3.2.1 Contractor shall comply with requirements of Underground Facility Damage Prevention and Safety Act TEX. UTIL. CODE ANN. Ch. 251 (Vernon Supp. 2002).

10.3.2.2 Contractor shall comply with all safety rules and regulations of the Federal Occupational Health and Safety Act of 1970 and subsequent amendments (OSHA).

10.3.3 Contractor shall erect and maintain, as required by existing conditions and performance of the Contract, reasonable safeguards for safety and protection of persons and property, including posting danger signs and other warnings against hazards, promulgating safety regulations, and notifying owners and users of adjacent sites and utilities.

10.3.4 Contractor shall designate responsible member of Contractor's organization at site whose duty is prevention of accidents. This person will be Contractor's Superintendent unless otherwise designated by Contractor in writing to City Engineer.

10.3.5 Contractor shall prevent windblown dust and may not burn or bury trash debris or waste products on-site. Contractor shall prevent environmental pollution, including but not limited to particulates, gases and noise, as a result of the Work.

10.3.6 When use or storage of hazardous materials or equipment, or unusual methods are necessary for execution of the Work, Contractor shall exercise utmost care and carry on the activities under supervision of properly qualified personnel.

10.3.7 Contractor shall promptly remedy damage and loss to property referred to in Subparagraphs 10.3.1.2 and 10.3.1.3, caused in whole or in part by Contractor, or Subcontractors, which is not covered by insurance required by the Contract. Contractor is not required to remedy damage or loss attributable to the City, Design Consultant, or other contractors.

10.4 *EMERGENCIES*

10.4.1 In emergencies affecting safety of persons or property, Contractor shall act at Contractor's discretion to prevent imminent damage, injury, or loss. Additional compensation or extension of time claimed by Contractor because of emergencies are determined as provided in Article 7.

ARTICLE 11 - INSURANCE AND BONDS

11.1 *GENERAL INSURANCE REQUIREMENTS*

11.1.1 With no intent to limit Contractor's liability under indemnification provisions set forth in Paragraphs 3.25 and 3.26, Contractor shall provide and maintain in full force and effect during term of the Contract and all extensions and amendments thereto, at least the following insurance and available limits of liability.

11.1.2 If any of the following insurance is written as "claims made" coverage and the City is required to be carried as additional insured, then Contractor's insurance shall include a two-year extended discovery period after last date that Contractor provides any work under the Contract.

11.1.3 Aggregate amounts of coverage, for purposes of the Contract, are agreed to be amounts of coverage available during fixed 12-month policy period.

11.2 *INSURANCE TO BE PROVIDED BY CONTRACTOR*

11.2.1 *Risks and Limits of Liability:* Contractor shall maintain the insurance coverages in the listed amounts, as set out in Table 1.

11.2.2 If Limit of Liability for Excess Coverage is $2,000,000 or more, Limit of Liability for Employer's Liability may be reduced to $500,000.

11.2.3 *Insurance Coverage*: At all times during the term of this Contract and any extensions or renewals, Contractor shall provide and maintain insurance coverage that meets the Contract requirements. Prior to beginning performance under the Contract, at any time upon the Director's request, or each time coverage is renewed or updated, Contractor shall furnish to the Director current certificates of insurance, endorsements, all policies, or other policy documents evidencing adequate coverage, as necessary. Contractor shall be responsible for and pay (a) all premiums and (b) any claims or losses to the extent of any deductible amounts. Contractor waives any claim it may have for premiums or deductibles against the City, its officers, agents, or employees. Contractor shall also require all subcontractors or consultants whose subcontracts exceed $100,000 to provide proof of insurance coverage meeting all requirements stated above except amount. The amount must be commensurate with the amount of the subcontract, but no less than $500,000 per claim.

11.2.4 *Form of insurance*: The form of the insurance shall be approved by the Director and the City Attorney; such approval (or lack thereof) shall never (a) excuse non-compliance with the terms of this Section, or (b) waive or estop the City from asserting its rights to terminate this Contract. The policy issuer shall (1) have a Certificate of Authority to transact insurance business in Texas, or (2) be an eligible non-admitted insurer in the State of Texas and have a Best's rating of at least B+, and a Best's Financial Size Category of Class VI or better, according to the most current Best's Key Rating Guide. Each insurer is subject to approval by City Engineer in City Engineer's sole discretion as to conformance with these requirements.

11.2.5 *Required Coverage*: The City shall be an Additional Insured under this Contract, and all policies except Professional Liability and Worker's Compensation must name the City as an Additional Insured. Contactor waives any claim or right of subrogation to recover against the City, its officers, agents, or employees, and each of Contractor's insurance policies except professional liability must contain coverage waiving such claim. Each policy, except Workers' Compensation and Professional Liability, must also contain an endorsement that the policy is primary to any other insurance available to the Additional Insured with respect to claims arising under this Contract. If professional liability coverage is written on a "claims made" basis, Contractor shall also provide proof of renewal each year for two years after substantial completion of the Project, or in the alternative: evidence of extended reporting period coverage for a period of two years after substantial completion, or a project liability policy for the Project covered by this Contract with a duration of two years after substantial completion.

11.2.6 *Deductibles:* Contractor assumes and bears any claims or losses to extent of deductible amounts and waives any claim it may ever have for same against the City, its officers, agents, or employees.

11.2.7 *Notice*: **CONTRACTOR SHALL GIVE 30 DAYS' ADVANCE WRITTEN NOTICE TO THE DIRECTOR IF ANY OF ITS INSURANCE POLICIES ARE CANCELED OR NON-RENEWED**. Within the 30-day period, Contractor shall provide other suitable policies in order to maintain the required coverage. If Contractor does not comply with this requirement, the Director, at his or her sole discretion, may immediately suspend Contractor from any further performance under this Agreement and begin procedures to terminate for default.

11.2.8 *Subrogation:* Contractor waives any claim or right of subrogation to recover against the City, its officers, agents, or employees. Each policy,

except professional liability, must contain an endorsement waiving such claim.

11.2.9 *Endorsement of Primary Insurance:* Each policy, except Workers' Compensation policies, must contain an endorsement that the policy is primary insurance to any other insurance available to additional insured with respect to claims arising hereunder.

11.2.10 *Liability for Premium:* Contractor is solely responsible for payment of all insurance premium requirements hereunder and the City is not obligated to pay any premiums.

11.2.11 *Additional Requirements for Workers' Compensation Insurance Coverage:* Contractor shall, in addition to meeting the obligations set forth in Table 1, maintain throughout the term of the Contract Workers' Compensation coverage as required by statute, and Contractor shall specifically comply with requirements set forth in Paragraph 11.2.10. The definitions set out below shall apply only for purposes of this Paragraph 11.2.10.

11.2.12 Definitions:

11.2.12.1 *Certificate of Coverage:* A copy of certificate of insurance, or coverage agreement (TWCC-81, TWCC-82, TWCC-83, or TWCC-84), showing statutory Workers' Compensation insurance coverage for Contractor's, Subcontractor's, or Supplier's employees providing services for the duration of the Contract.

11.2.12.2 *Duration of the Work:* Includes the time from Date of Commencement of the Work until Contractor's work under the Contract has been completed and accepted by City Council.

11.2.12.3 *Persons providing services for the Work (Subcontractor in Texas Labor Code § 406.096):* includes all persons or entities performing all or part of services Contractor has undertaken to perform on the Work, regardless of whether that person contracted directly with Contractor and regardless of whether that person has employees. This includes, without limitation, independent contractors, subcontractors, leasing companies, motor carriers, owner-operators, employees of the entity, or employees of entity which furnishes persons to provide services on the Work. Services include, without limitation, providing, hauling, or delivering equipment or materials, or providing labor, transportation, or other service related to the Work. Services do not include activities unrelated to the Work, such as food/beverage vendors, office supply deliveries, and delivery of portable toilets.

11.2.13 Contractor shall provide coverage, based on proper reporting of classification codes and payroll amounts and filing of coverage agreements, which meets the statutory requirements of TEX. LAB. CODE ANN., Section 401.011(44) for employees of Contractor providing services on the Work, for duration of the Work.

11.2.14 Contractor shall provide a Certificate of Coverage to the City prior to being awarded the Contract.

11.2.15 If coverage period shown on Contractor's original Certificate of Coverage ends during duration of the Work, Contractor shall file new Certificate of Coverage with the City showing that coverage has been extended.

11.2.16 Contractor shall obtain from each person providing services on the Work, and provide to City Engineer:

11.2.16.1 Certificate of Coverage, prior to that person beginning work on the Work, so the City will have on file Certificates of Coverage showing coverage for all persons providing services on the Work; and

11.2.16.2 no later than seven days after receipt by Contractor, new Certificate of Coverage showing extension of coverage, if coverage period shown on current Certificate of Coverage ends during the duration of the Work.

11.2.17 Contractor shall retain all required Certificates of Coverage for the duration of the Work and for one year thereafter.

11.2.18 Contractor shall notify City Engineer in writing by certified mail or personal delivery, within 10 days after Contractor knew or should have known, of any change that materially affects provision of coverage of any person providing services on the Work.

11.2.19 Contractor shall post on-site a notice, in text, form and manner prescribed by Texas Workers'

Compensation Commission, informing all persons providing services on the Work that they are required to be covered, and stating how person may verify coverage and report lack of coverage.

11.2.20 Contractor shall contractually require each person with whom it contracts to provide services on the Work to:

11.2.20.1 provide coverage, based on proper reporting of classification codes, payroll amounts and filing of any coverage agreements, which meets statutory requirements of TEX. LAB. CODE ANN., Section 401.011(44) for all its employees providing services on the Work, for the duration of the Work;

11.2.20.2 provide to Contractor, prior to that person's beginning work on the Work, a Certificate of Coverage showing that coverage is being provided for all employees of the person providing services on the Work, for the duration of the Work;

11.2.20.3 provide Contractor, prior to the end of the coverage period, a new Certificate of Coverage showing extension of coverage, if the coverage period shown on the current Certificate of Coverage ends during the duration of the Work;

11.2.20.4 obtain from each other person with whom it contracts, and provide to Contractor: (1) Certificate of Coverage, prior to other person's beginning work on the Work; and (2) new Certificate of Coverage showing extension of coverage, prior to end of coverage period, if coverage period shown on the current Certificate of Coverage ends during duration of the Work.

11.2.20.5 retain all required Certificates of Coverage on file for the duration of the Work and for one year thereafter;

11.2.20.6 notify City Engineer in writing by certified mail or personal delivery within 10 days after person knew, or should have known, of change that materially affects provision of coverage of any person providing services on the Work; and

11.2.20.7 contractually require each person with whom it contracts to perform as required by Paragraphs 11.2.10.1 through 11.2.10.7, with Certificates of Coverage to be provided to person for whom they are providing services.

11.2.21 By signing the Contract or providing or causing to be provided a Certificate of Coverage, Contractor is representing to the City that all employees of Contractor who will provide services on the Work will be covered by Workers' Compensation coverage for the duration of the Work, that coverage will be based on proper reporting of classification codes and payroll amounts, and that all coverage agreements will be filed with appropriate insurance carrier. Contractor is not allowed to self-insure Workers' Compensation. Contractor may be subject to administrative penalties, criminal penalties, civil penalties, or other civil actions for providing false or misleading information.

11.2.22 Contractor's failure to comply with Paragraph 11.2.10 is a breach of the Contract by Contractor, which entitles the City to declare the Contract void if Contractor does not remedy breach within 10 days after receipt of notice of breach from City Engineer.

11.2.23 *Subcontractor Insurance Requirements:* Contractor shall require Subcontractors and Suppliers to obtain Commercial General Liability, Workers' Compensation, Employer's Liability and Automobile Liability coverage that meets all the requirements of Paragraph 11.2. The amount must be commensurate with the amount of the subcontract, but not less than $500,000 per occurrence. Contractor shall require all Subcontractors with whom it contracts directly, whose subcontracts exceed $100,000, to provide proof of Commercial General Liability and Automobile Liability insurance coverage meeting the above requirements. Contractor shall comply with all requirements set out under Paragraph 11.2.10 as to Workers' Compensation Insurance for all Subcontractors and Suppliers.

REQUIRED COVERAGE

(Coverage)	(Limit of Liability)
.1 Workers' Compensation	• Statutory Limits for Workers' Compensation
.2 Employer's Liability	• Bodily Injury by Accident $1,000,000 (each accident) • Bodily Injury by Disease $1,000,000 (policy limit) • Bodily Injury by Disease $1,000,000 (each employee)
.3 Commercial General Liability: Including Contractor's Protective, Broad Form Property Damage, Contractual Liability, Explosion, Underground and Collapse, Bodily Injury, Personal Injury, Products, and Completed Operations (for a period of one year following completion of the Work).	• Combined single limit of $1,000,000 (each occurrence), subject to general aggregate of $1,000,000; • Products and Completed Operations $1,000,000 aggregate.
.4 Owner's and Contractor's Protective Liability	• $1,000,000 combined single limit each Occurrence/ aggregate
.5 Installation Floater (Unless alternative coverage approved by City Attorney)	• Value of stored material or equipment, listed on Certificates of Payments, but not yet incorporated into the Work
.6 Automobile Liability Insurance: (For automobiles furnished by Contractor in course of his performance under the Contract, including Owned, Non-owned, and Hired Auto coverage)	• $1,000,000 combined single limit each occurrence for (1) Any Auto or (2) All Owned, Hired, and Non-Owned Autos
.7 Excess Coverage	• $1,000,000 each occurrence/combined aggregate in excess of limits specified for Employer's Liability, Commercial General Liability, and Automobile Liability
Aggregate Limits are per 12-month policy period unless otherwise indicated.	

11.3 *PROOF OF INSURANCE*

11.3.1 Prior to commencing services and at time during the term of the Contract, Contractor shall furnish City Engineer with Certificates of Insurance, along with Affidavit from Contractor confirming that Certificate accurately reflects insurance coverage that is available during term of the Contract. If requested in writing by City Engineer, Contractor shall furnish City Engineer with certified copies of Contractor's actual insurance policies. Failure of Contractor to provide certified copies, as requested, may be deemed, at City Engineer's or City Attorney's discretion, a material breach of the Contract.

11.3.2 Notwithstanding the proof of insurance requirements, Contractor shall continuously maintain in effect required insurance coverage set forth in Paragraph 11.2. Failure of Contractor to comply with this requirement does constitute a material breach by Contractor allowing the City, at its option, to immediately suspend or terminate work, or exercise any other remedy allowed under the Contract. Contractor agrees that the City has not waived or is not estopped to assert a material breach of the Contract because of any acts or omissions by the City regarding its review or non-review of insurance documents provided by Contractor, its agents, employees, or assigns.

11.3.3 Contractor shall provide updated certificates of insurance to the Director upon request. The Contractor shall be responsible for delivering a current certificate of insurance in the proper form to the Director as long as Contractor is required to furnish insurance coverage under Paragraph 11.2.

11.3.4 Every certificate of insurance Contractor delivers in connection with this Contract shall

11.3.4.1 be less than 12 months old;

11.3.4.2 include all pertinent identification information for the Insurer, including the company name and address, policy

number, NAIC number or AMB number, and authorized signature;

11.3.4.3 include in the Certificate Holder Box the Project name and reference numbers, contractor's email address, and indicates the name and address of the Project Manager;

11.3.4.4 include the Contractor's email address in the Certificate Holder Box;

11.3.4.5 include the Project reference numbers on the City address so the Project reference number is visible in the envelope window; and

11.3.4.6 be appropriately marked to accurately identify all coverages and limits of the policy, effective and expiration dates, and waivers of subrogation in favor of the City for Commercial General Liability, Automobile Liability, and Worker's Compensation/Employers' Liability.

11.4 *PERFORMANCE AND PAYMENT BONDS*

11.4.1 For Contracts over the value of $25,000, Contractor shall provide Bonds on the City's standard forms covering faithful performance of the Contract and payment of obligations arising thereunder as required in the Contract pursuant to Chapter 2253 of the Government Code. The Bonds must be for 100 percent of Original Contract Price and in accordance with conditions stated on standard City Performance and Payment Bond and Statutory Payment Bond forms. Bonds may be obtained from Contractor's usual source and cost for the Bonds are included in Contract Price.

11.5 *MAINTENANCE BONDS*

11.5.1 *One-year Maintenance Bond:* Contractor shall provide Bond on standard City One-year Maintenance Bond form, providing for Contractor's correction, replacement, or restoration of any portion of the Work which is found to be not in compliance with requirements of the Contract during one-year correction period required in Paragraph 12.2. The Maintenance Bond must be for 100 percent of the Original Contract Price.

11.6 *SURETY*

11.6.1 A Bond that is given or tendered to the City pursuant to the Contract must be executed by a surety company that is authorized and admitted to write surety Bonds in the State of Texas.

11.6.2 If a Bond is given or tendered to the City pursuant to the Contract in an amount greater than 10 percent of Surety's capital and surplus, Surety shall provide certification that Surety has reinsured that portion of the risk that exceeds 10 percent of Surety's capital and surplus. The reinsurance must be with one or more reinsurers who are duly authorized, accredited, or trusted to do business in the State of Texas. The amount reinsured by reinsurer may not exceed 10 percent of reinsurer's capital and surplus. The amount of allowed capital and surplus must be based on information received from State Board of Insurance.

11.6.3 If the amount of a Bond is greater than $100,000, Surety shall:

11.6.3.1 also hold certificate of authority from the United States Secretary of Treasury to qualify as surety on obligations permitted or required under federal law; or,

11.6.3.2 Surety may obtain reinsurance for any liability in excess of $100,000 from reinsurer that is authorized and admitted as a reinsurer in the State of Texas and is the holder of a certificate of authority from the United States Secretary of the Treasury to qualify as surety or reinsurer on obligations permitted or required under federal law.

11.6.4 Determination of whether Surety on the Bond or the reinsurer holds a certificate of authority from the United States Secretary of the Treasury is based on information published in Federal Register covering the date on which Bond was executed.

11.6.5 Each Bond given or tendered to the City pursuant to the Contract must be on City forms with no changes made by Contractor or Surety, and must be dated, executed, and accompanied by power of attorney stating that the attorney in fact executing such the bond has requisite authority to execute such Bond. The Bonds must be dated and must be no more than 30 days old.

11.6.6 Surety shall designate in its Bond, power of attorney, or written notice to the City, an agent resident in Harris County to whom any requisite notices may be delivered and on whom service of process may be had in matters arising out of the suretyship.

11.6.7 Contractor shall furnish information to a payment bond beneficiary as required by TEX. GOV'T CODE ANN. CH. 2253.

11.7 *DELIVERY OF BONDS*

11.7.1 Contractor shall deliver required Bonds to the City within time limits stated in Notice of Intent to Award and prior to Date of Commencement of the Work.

ARTICLE 12 - UNCOVERING AND CORRECTION OF THE WORK

12.1 *UNCOVERING OF THE WORK*

12.1.1 If a portion of the Work has been covered which City Engineer has not specifically requested to observe prior to its being covered, City Engineer may request to see such work and it must be uncovered by Contractor. If such work is in accordance with the Contract, the costs of uncovering and covering such work are charged to the City by Change Order. If such work is not in accordance with the Contract, Contractor shall pay for uncovering and shall correct the nonconforming Work promptly after receipt of Notice of Noncompliance to do so.

12.2 *CORRECTION OF THE WORK*

12.2.1 Contractor shall promptly correct or remove work rejected by City Engineer or work failing to conform to requirements of the Contract, whether observed before or after Date of Substantial Completion and whether fabricated, Installed, or completed.

12.2.2 Contractor bears costs of correcting the rejected or nonconforming work including additional testing and inspections, and compensation for Design Consultant's services and expenses made necessary thereby.

12.2.3 If within one year after Date of Substantial Completion, or after date for commencement of warranties established under Paragraph 9.9.5 or by other applicable special warranty required by the Contract, whichever is later in time, any of the Work is found not to be in accordance with the requirements of the Contract, Contractor shall correct such work promptly after receipt of Notice of Noncompliance to do so.

12.2.4 One-year correction period for portions of the Work completed after Date of Substantial Completion will begin on the date of acceptance of that portion of the Work. This obligation under this Paragraph survives acceptance of the Work under the Contract and termination of the Contract.

12.2.5 The one-year correction period does not establish a duration for the Contractor's general warranty under Paragraph 3.12. The City retains the right to recover damages from the Contractor as long as may be permitted by the applicable statute of limitations.

12.2.6 If Contractor does not proceed with correction of the nonconforming work within time fixed by Notice of Noncompliance, the City may correct nonconforming work or remove nonconforming work and store salvageable Products at Contractor's expense. Contractor shall pay the costs of correction of nonconforming work and removal and storage of salvageable Products to the City. If Contractor does not pay costs of the correction or removal and storage within 10 days after written notice, the City may sell the Products at auction or at private sale. The City will account for proceeds thereof after deducting costs and damages that would have been borne by Contractor, including compensation for services of Design Consultant and necessary expenses. If the proceeds of sale do not cover costs which Contractor should have borne, Contractor shall pay the value of the deficiency to the City.

12.2.7 Contractor bears cost of correcting work originally installed by Contractor, the City, or by separate contractors and damaged by Contractor's correction or removal of Contractor's work.

12.3 *ACCEPTANCE OF NONCONFORMING WORK*

12.3.1 If City Engineer prefers to accept work which is not in accordance with requirements of the Contract, City Engineer may do so only by issuance of Change Order, instead of requiring its removal and correction. City Engineer will determine Contract Price reduction. The reduction will become effective even if final payment has been made.

ARTICLE 13 - MISCELLANEOUS PROVISIONS

13.1 *GOVERNING LAWS*

13.1.1 The Contract is subject to the laws of the State of Texas, the City Charter and Ordinances, the laws of the federal government of the United States, and all rules and regulations of any regulatory body or officer having jurisdiction.

13.1.2 Venue for any litigation relating to the Contract is Harris County, Texas.

13.2 *SUCCESSORS*

13.2.1 The Contract binds and benefits the Parties and their legal successors and permitted assigns; however, this Paragraph 13.2.1 does not alter the restrictions on assignment and disposal of assets set out in Paragraph 13.3.1. The Contract does not create any personal liability on the part of any officer or agent of the City.

13.3 *BUSINESS STRUCTURE AND ASSIGNMENTS*

13.3.1 Contractor may not assign the Contract at law or otherwise, or dispose of all or substantially all of its assets without City Engineer's prior written consent. Nothing in this Section, however, prevents the assignment of accounts receivable or the creation of a security interest as described in §9.406 of the Texas Business & Commerce Code. In the case of such an assignment, Contractor shall immediately furnish the City with proof of the assignment and the name, telephone number, and address of the assignee and a clear identification of the fees to be paid to the assignee.

13.3.2 Any series, as defined by the TEX. BUS. ORG. CODE ANN., affiliate, subsidiary, or successor to which Contractor assigns or transfers assets shall join in privity and be jointly and severally liable under this Contract.

13.4 *WRITTEN NOTICE*

13.4.1 All notices required or permitted by the Contract must be in writing and must be effected by hand delivery; registered or certified mail, return receipt requested; or facsimile with confirmation copy mailed to receiving Party. Notice is sufficient if made or addressed with proper postage to the address stated in the Agreement for each Party ("Notice Address") or faxed to the facsimile number stated in the Agreement for each Party. The notice is deemed delivered on the earlier of:

13.4.1.1 the date the Notice is actually received;

13.4.1.2 the third day following deposit in a United States Postal Service post office or receptacle; or

13.4.1.3 the date the facsimile is sent unless the facsimile is sent after 5:00 p.m. local time of the recipient and then it is deemed received on the following day.

Any Party may change its Notice Address or facsimile number at any time by giving written notice of the change to the other Party in the manner provided for in this Paragraph at least 15 days prior to the date the change is affected.

13.5 *RIGHTS AND REMEDIES*

13.5.1 Duties and obligations imposed by the Contract and rights and remedies available thereunder are in addition to and not a limitation of duties, obligations, rights, and remedies otherwise imposed or available by law.

13.5.2 No act or failure to act by the City or Contractor is a waiver of rights or duties afforded them under the Contract, nor is the act or failure to act constitute approval of or acquiescence in a breach of the Contract. No waiver, approval or acquiescence is binding unless in writing and, in the case of the City, signed by City Engineer.

13.6 *TESTS AND INSPECTIONS*

13.6.1 Contractor shall give City Engineer, Construction Manager, and Design Consultant timely notice of the time and place where tests and inspections are to be made. Contractor shall cooperate with inspection and testing personnel to facilitate required inspections or tests.

13.6.2 The City will employ and pay for services of an independent testing laboratory to perform inspections or acceptance tests required by the Contract except:

13.6.2.1 inspections or tests covered by Paragraph 13.6.3;

13.6.2.2 those otherwise specifically provided in the Contract; or

13.6.2.3 costs incurred in connection with tests or inspections conducted pursuant to Paragraph 12.2.2.

13.6.3 Contractor is responsible for and shall pay all costs in connection with inspection or testing required in connection with City Engineer's acceptance of a Product to be incorporated into the Work, or of materials, mix designs, or equipment submitted for approval prior to Contractor's purchase thereof for incorporation into the Work.

13.6.4 Neither observations by the City, Construction Manager, or Design Consultant, nor inspections, tests, or approvals by others, relieves Contractor from Contractor's obligations to perform the Work in accordance with the Contract.

13.7 *INTEREST*

13.7.1 No interest will accrue on late payments by the City except as provided under Chapter 2251 of the Government Code.

13.8 *PARTIES IN INTEREST*

13.8.1 The Contract does not bestow any rights upon any third party, but binds and benefits the Parties only.

13.9 *ENTIRE CONTRACT*

13.9.1 The Contract merges the prior negotiations and understandings of the Parties and embodies the entire agreement of the Parties. No other agreements, assurances, conditions, covenants, express or implied, or other terms of any kind, exist between the Parties regarding the Contract.

13.10 *WRITTEN AMENDMENT*

13.10.1 Changes to the Contract that cannot be effected by Modifications, must be made by written amendment, which will not be effective until approved by City Council.

13.11 *COMPLIANCE WITH LAWS*

13.11.1 Contractor shall comply with the Americans with Disabilities Act of 1990 as amended (ADA) and Texas Architectural Barriers Act and all regulations relating to either statute.

13.11.2 Contractor shall comply with all applicable federal, state, and city laws, rules and regulations.

13.12 *SEVERABILITY*

13.12.1 If any part of the Contract is for any reason found to be unenforceable, all other parts remain enforceable to the extent permitted by law.

ARTICLE 14 - TERMINATION OR SUSPENSION OF THE CONTRACT

14.1 *TERMINATION BY THE CITY FOR CAUSE*

14.1.1 Each of the following acts or omissions of Contractor or occurrences shall constitute an "Event of Default" under the Contract:

14.1.1.1 Contractor refuses or fails to supply enough properly skilled workers or proper Products;

14.1.1.2 Contractor disregards laws, ordinances, rules, regulations, or orders of a public authority having jurisdiction;

14.1.1.3 Contractor is guilty of material breach of any duty or obligation of Contractor under the Contract, including, but not limited to, failure to submit certified payrolls electronically;

14.1.1.4 Contractor has had any other contract with the City terminated for cause at any time subsequent to the effective date of the Contract as set out in the Agreement; or

14.1.1.5 Contractor fails to utilize Ultra Low Sulfur Diesel Fuel, as required in Paragraph 3.9.1.1.

14.1.2 If an Event of Default occurs, City Engineer may, at his option and without prejudice to any other rights or remedies which the City may have, deliver a written notice to Contractor and Surety describing the Event of Default and giving the Contractor 10 days to cure the Event of Default. If after the cure period, Contractor has failed or refused to cure the Event of Default, then City Engineer may deliver a second written notice to Contractor giving notice of the termination of the Contract or of the termination of Contractor's performance under the Contract ("Notice of Termination"). If City Engineer issues a Notice of Termination, then City Engineer may, subject to any prior rights of Surety and any other rights of the City under the Contract or at law:

14.1.2.1 request that Surety complete the Work; or

14.1.2.2 take possession of the site and all materials, equipment, tools, and construction equipment and machinery on the site owned by Contractor; and

14.1.2.3 finish the Work by whatever reasonable method City Engineer may deem expedient.

14.1.3 After Contractor's receipt of a Notice of Termination, and except as otherwise directed in writing by City Engineer, Contractor shall:

14.1.3.1 stop the Work on the date and to the extent specified in the Notice of Termination;

14.1.3.2 place no further orders or subcontracts for Products or services;

14.1.3.3 terminate all orders and subcontracts to the extent that they relate to performance of work terminated;

14.1.3.4 assign to the City, in the manner, at the times, and to the extent directed by City Engineer, all rights, title, and interest of Contractor, under the terminated supply orders and subcontracts. The City may settle or pay claims arising out of termination of the orders and subcontracts;

14.1.3.5 settle all outstanding liabilities and all claims arising out of the termination of

supply orders and subcontracts with approval of City Engineer;

14.1.3.6 take action as may be necessary, or as City Engineer may direct, for protection and preservation of property related to the Work that is in possession of Contractor, and in which the City has or may acquire an interest; and

14.1.3.7 secure the Work in a safe state before leaving the site, providing any necessary safety measures, shoring, or other devices.

14.1.4 If the City terminates the Contract or terminates Contractor's performance under the Contract for any one or more of the reasons stated in Paragraph 14.1.1, Contractor may not receive any further payment until the Work is complete, subject to Paragraph 14.1.5.

14.1.5 If the unpaid balance of Contract Price exceeds the costs of finishing the Work, including liquidated damages and other amounts due under the Contract, the balance will be paid to Contractor. If the costs of finishing the Work exceed the unpaid balance, Contractor shall, within 10 days of receipt of written notice setting out the amount of the excess costs, pay the difference to the City. The amount to be paid to Contractor or the City will be certified by City Engineer in writing, and this obligation for payment shall survive termination of the Contract or termination of Contractor's performance under the Contract. Termination of the Contractor for cause shall not relieve the Surety from its obligation to complete the project.

14.2 *TERMINATION BY THE CITY FOR CONVENIENCE*

14.2.1 City Engineer may, without cause and without prejudice to other rights or remedies of the City, give Contractor and Surety a Notice of Termination with a seven days written notice.

14.2.2 After receipt of the Notice of Termination, and except as otherwise approved by City Engineer, Contractor shall conform to requirements of Paragraph 14.1.3.

14.2.3 After receipt of the Notice of Termination, Contractor shall submit to the City its termination Claim, in forms required by City Engineer. The Claim will be submitted to the City promptly, but no later than six months from the effective date of termination, unless one or more extensions are granted by City Engineer in writing. If Contractor fails to submit its termination Claim within the time allowed, in accordance with Paragraph 14.2.4, City Engineer will determine, on the basis of available information, the amount, if any, due to Contractor because of termination, and City Engineer's determination is final and binding on the Parties. The City will then pay to Contractor the amount so determined.

14.2.4 City Engineer will determine, on the basis of information available to City Engineer, the amount due, if any, to Contractor for the termination as follows:

14.2.4.1 Contract Price for all work performed in accordance with the Contract up to the date of termination determined in the manner prescribed for monthly payments in Article 9, except no retainage is withheld by the City either for payment determined by percentage of completion or for materials and equipment delivered to the site, in storage or in transit.

14.2.4.2 Reasonable termination expenses, including costs for settling and paying Subcontractor and Supplier claims arising out of termination of the Work, reasonable cost of preservation and protection of the City's property after termination, if required, and the cost of Claim preparation. Termination expenses do not include field or central office overhead, salaries of employees of Contractor, or litigation costs, including attorneys' fees.

No amount is allowed for anticipated profit or central office overhead on uncompleted work, or any cost or lost profit for other business of Contractor alleged to be damaged by the termination.

14.2.5 Contractor shall promptly remove from the site any construction equipment, tools, and temporary facilities, except the temporary facilities which City Engineer may wish to purchase and retain.

14.2.6 Contractor shall cooperate with City Engineer during the transition period.

14.2.7 The City will take possession of the Work and materials delivered to the site, in storage, or in transit, as of date or dates specified in the Notice of Termination, and is responsible for maintenance, utilities, security, and insurance, as stated in Notice of Termination.

14.3 *SUSPENSION BY THE CITY FOR CONVENIENCE*

14.3.1 City Engineer may, without cause, after giving Contractor and Surety 24-hour prior written notice, order Contractor to suspend, delay, or interrupt the Work in whole or in part for a period of time as City Engineer may determine.

14.3.2 An adjustment will be made in Contract Time equivalent to the time of suspension.

14.3.3 Adjustment will be made to Contract Price for increases in the cost of performance of the Work, including profit on increased cost of performance caused by suspension, delay, or interruption of the Work in accordance with Paragraph 7.3. No adjustment will be made to the extent that:

14.3.3.1 performance was, or would have been, suspended, delayed, or interrupted by another cause for which Contractor is responsible; or

14.3.3.2 adjustment is made or denied under another provision of the Contract.

14.4 *TERMINATION BY CONTRACTOR*

14.4.1 Contractor may terminate the Contract if the Work is stopped for a period of 30 days through no act or fault of Contractor, directly related to one of these events:

14.4.1.1 issuance of an order of a court or other public authority having jurisdiction;

14.4.1.2 act of government, such as a declaration of national emergency which makes material unavailable; or

14.4.1.3 if repeated suspensions, delays, or interruptions by the City as described in Paragraph 14.3 constitute, in the aggregate, more than 100 percent of the total number of days scheduled for completion, or 120 days in any 365-day period, whichever is less;

No termination will be effective for the above reasons if Contractor delivers written notice to City Engineer describing the reason for termination, giving the proposed termination date, and granting the City a reasonable opportunity to respond and cure any City default before termination is effective.

14.4.2 If the Contract is terminated pursuant to this Paragraph 14.4, Contractor shall comply with the requirements of Paragraphs 14.2.2 through 14.2.7.

END OF DOCUMENT

Document 00800

SUPPLEMENTARY CONDITIONS

The following Paragraphs amend and supplement the August 15, 2015 edition of General Conditions. Unaltered portions of General Conditions remain in effect.

ARTICLE 1 - GENERAL PROVISIONS:

1.1 *DEFINITIONS*: *Insert the following Paragraph and 1.1.22.1, and reorder the remaining definitions accordingly.*

1.1.22.1 *Good Faith Efforts*. Steps taken to achieve an MBE, WBE, SBE, or PDBE goal or other requirements which, by their scope, intensity, and usefulness, demonstrate the bidder's responsiveness to fulfill the business opportunity objective, as well as the Contractor's responsibility to put forth measures to meet or exceed the MBE, WBE, SBE, or PDBE goal (Contract Goal). These steps apply from before a contract's award, through its duration, and after its conclusion, in the event the Contractor has been unsuccessful in meeting the Contract Goal. These efforts are required whether a Goal Oriented Contract or a Regulated Contract, as defined in the Office of Business Opportunity's Policy & Procedures Manual, available at http://www.houstontx.gov/obo.

ARTICLE 3 - THE CONTRACTOR

3.5 *LABOR*: *Insert the following Paragraphs, 3.5.3.1.1, 3.5.3.1.2 and3.5.3.1.3.*

3.5.3.1.1 If the Original Contract Price is greater than One Million Dollars, Contractor shall make Good Faith Efforts to comply with the City ordinances regarding Minority Business Enterprises (MBE), Women Business Enterprises (WBE), Persons with Disabilities Business Enterprises (PDBE) and Small Business Enterprise (SBE) participation goals which are as follows:

.1 the MBE goal is 13% percent,

.2 the WBE goal is 7% percent, and

.3 the PDBE goal is 0% percent.

.4 The bidder may substitute SBE participation of no more than four percent of the MBE goal, the WBE goal, or portions of the MBE Goal and WBE Goal.

3.5.3.1.2 The MBE, WBE, PDBE, and SBE goals are specific to this Agreement. The Contractor shall make reasonable efforts to achieve these goals.

3.5.3.1.3 Failure by Contractor to comply with the goals for MBE, WBE, SBE, or PDBE is a material breach of the Agreement, which may result in termination of the Agreement, or such other remedy permitted as the City deems appropriate.

ARTICLE 8 - TIME

8.1 *PROGRESS AND COMPLETION: Add the following Paragraph 8.1.6.1.*

8.1.6.1 Contractor shall credit the City by Change Order for inspection services for overtime work or work performed on Sundays or Legal Holidays. The amount Contractor credits the City will be [$50.00 per hour] per inspector for inspection services.

ARTICLE 9 - PAYMENTS AND COMPLETION

9.12 *LIQUIDATED DAMAGES: Insert the following Paragraph 9.12.1.1.*

9.12.1.1 The amount of liquidated damages payable by Contractor or Surety for each and every day of delay beyond Contract Time, are $1,200.00 per day.

ARTICLE 11 - INSURANCE AND BONDS

11.2 INSURANCE TO BE PROVIDED BY CONTRACTOR: Insert the following Paragraph 11.2.1.2.

11.2.1.2 Contractor shall purchase for the duration of the Contract the insurance set out in Table 2 in addition to the minimum insurance coverage set out in section 11.2.1.

TABLE 2
ADDITIONAL REQUIRED COVERAGE
DEFENSE COSTS EXCLUDED FROM FACE AMOUNT OF POLICY.

(Coverage)	(Limit of Liability)
Property and Casualty Coverage: "All Causes of Loss" Builder's Risk Form for directing physical change to building or plant construction on the Work site and/or all land improvements including all work. (Including but not limited to earthquake, flood, boiler, and machinery including testing, damage to existing or adjoining property, time element coverage, collapse, soft costs	100% of Contract Price, including change orders

(management, architecture, financial costs, pre-opening costs, etc.), transit coverage, off-site storage).

END OF DOCUMENT

Document 00805

EQUAL EMPLOYMENT OPPORTUNITY PROGRAM REQUIREMENTS
(City of Houston Information Requirements
for the Successful Bidder on All Construction Contracts)

DOCUMENTS THAT MUST BE SIGNED AND RETURNED TO THE CITY OF HOUSTON PRIOR TO FINAL EXECUTION OF CONTRACT

Certification by Bidder Regarding Equal Employment Opportunity EEO-3

Total Work Force Composition of the Company,..... EEO-6
or in lieu thereof, a copy of the latest Equal Employment Opportunity Commission's EEO-1 form (This information is required only if the Contractor has a work force of 50 or more people and the Contract is $50,000 or more.)

Company's Equal Employment Opportunity Compliance Program EEO-7

INFORMATION THAT MUST BE SUPPLIED DURING THE COURSE OF THE WORK

Certification By Proposed Subcontractor Regarding
Equal Employment Opportunity EEO-26

Certification by Proposed Material Suppliers, Lessors,and
Professional Service Providers Regarding Equal Employment Opportunity..... EEO-29

PLEASE COMPLETE PAGES EEO-3 THROUGH EEO-7 AND MAIL TO:

City of Houston
Mayor's Office of Business Opportunity
Contract Compliance Section
611 Walker, 7th Floor
Houston, Texas 77002
Attention: Director

The remainder of the reports can be mailed at the appropriate time.

EQUAL EMPLOYMENT OPPORTUNITY PROGRAM REQUIREMENTS

The following are Equal Employment Opportunity requirements to be met and documents to be submitted to:

Mayor's Office of Business Opportunity
Contract Compliance Section
611 Walker, 7th Floor
Houston, Texas 77002

Under the conditions and terms of all City construction contracts, the prime contractor is responsible for all Equal Employment Opportunity compliance, including subcontractor compliance.

EQUAL EMPLOYMENT OPPORTUNITY FORMS (EEO Forms)

These forms are submitted by the prime contractors at the beginning of the Project and as requested:

- EEO Forms 3, 6, and 7, by prime contractors

This form is submitted by all subcontractors before they begin work on the project:

- EEO Form 26 by subcontractors

This form is submitted by all suppliers, lessors, or professional services providers before they begin work on the project:

- EEO Form 29

POSTING

The following poster should be clearly displayed on each job site, or in case of annual service agreements, in the Contractor's office:

Equal Employment Opportunity is the Law Poster

JOB SITE VISITS

Site visits will be made by a Contract Compliance Officer, who will make their presence known to the Project Manager, Supervisor, or Foreman, and will conduct interviews with employees on site.

PAYMENT AND EVALUATION

Upon completion of the Project, as part of the contract-awarding department's total clearance process, the Office of Business Opportunity's Contract Compliance Section must certify to the department that all EEO compliance requirements have been met.

CERTIFICATION BY BIDDER REGARDING
EQUAL EMPLOYMENT OPPORTUNITY

GENERAL

In accordance with Executive Order 11246 (30 F.R. 12319-25), the implementing rules and regulations thereof, and orders of the Secretary of Labor, a certification regarding Equal Opportunity is required of bidders or prospective contractors and their proposed subcontractors prior to the award of contracts or subcontracts.

CERTIFICATION OF BIDDER

Bidder's Name:_____

Address:_____

Telephone Number:_____ Fax :_____

Name of the Company's EEO Officer: _____

E-mail Address:_____

Web Page/URL Address:_____

IRS Employer Identification Number:_____

Work to be performed:_____

Project No: _____

1. Participation in a previous contract or subcontract.

   a. Bidder has participated in a previous contract or subcontract subject to the Equal Opportunity Clause. ☐ YES ☐NO

   b. Compliance reports were required to be filed in connection with such contract or subcontract. ☐YES ☐NO

   c. Bidder has filed all compliance reports required by Executive Orders 10925, 11114, 11246, or by regulations of the Equal Employment Opportunity Commission issued pursuant to Title VII of the Civil Rights Act of 1964. ☐ YES ☐NO

   d. If answer of Item c. is "No", please explain in detail on reverse side of this certification.

2. Dollar amount of bid:$ _____

3. Anticipated performance period in days: _____

4. Expected total number of employees to perform the proposed construction: _____

5. Nonsegregated facilities.

   a. Notice to prospective federally-assisted construction contractors

      (1) A Certification of Nonsegregated Facilities, as required by the May 9, 1967, Order (32 F.R. 7439, May 19, 1967) on Elimination of Segregated Facilities, by the Secretary of Labor, must be submitted to the recipient prior to the award of a federally-assisted construction contract exceeding $10,000 which is not exempt from the provisions of the Equal Opportunity Clause.

      (2) Contractors receiving federally-assisted construction contract awards exceeding $10,000 which are not exempt from the provisions of the Equal Opportunity Clause will be required to provide the forwarding of the following notice to prospective subcontractors for supplies and construction contracts where the subcontracts exceed $10,000 and are not exempt from the provisions of the Equal Opportunity Clause.

      The federally-assisted construction Contractor certifies that he/she does not maintain or provide any segregated facilities at any of his/her establishments, and does not permit employees to perform their services at any location, under his/her control, where segregated facilities are maintained. The federally-assisted construction Contractor certifies further that he/she will not maintain or provide segregated facilities at any of his/her establishments, and will not permit employees to perform their services at any location, under his/her control, where segregated facilities are maintained. The federally-assisted construction Contractor agrees that a breach of this certification is a violation of the Equal Opportunity Clause in this Contract. As used in this certification, the term "segregated facilities" means any waiting rooms, work areas, restrooms and washrooms, restaurants and other eating areas, time clocks, locker rooms and other storage or dressing areas, parking lots, drinking fountains, recreation or entertainment areas, transportation, and housing facilities provided for employees which are segregated by explicit directive or are in fact segregated on the basis of race, creed, color, or national origin because of habit, local custom, or otherwise. The federally-assisted construction Contractor agrees that (except where he/she has obtained identical certifications from proposed Subcontractors for specific time periods) he/she will obtain identical certifications in duplicate from proposed Subcontractors prior to the award of subcontracts exceeding $10,000 which are not exempt from the provisions of the Equal Opportunity Clause, and that he/she will retain the duplicate of such certifications in his/her files. The Subcontractor will include the original in his/her bid package.

6. Race or ethnic group designation of bidder. Enter race or ethnic group in appropriate box:

☐ White ☐ Black ☐ Hispanic

☐ Pacific Islander, Asian ☐ American Indian, Aleut.

7. Gender of Owner ☐ Male ☐ Female

REMARKS: _____

Certification - The information above is true and complete to the best of my knowledge and belief.

_____
Company Officer (Please Type)

_____ _____
Signature Date

NOTE: The penalty for making false statements in offers is prescribed in 18 U.S.C. 1001.

Total Work Force Composition of the Company

City of Houston, Affirmative Action Requirements for All Construction Contracts

	White		Black		Hispanic		Pacific Islander/ Asian		Alaska Native/ Amer Ind.		Total Persons		Total Minority		Total Female	
	M	F	M	F	M	F	M	F	M	F	M	F	M	F	M	F
Officials and Administrators																
Professionals																
Paraprofessionals																
Technicians																
Protective Service Workers																
Sales Workers																
Office and Clerical																
Skilled Craft Workers																
Operatives (Semi-skilled)																
Laborers (Unskilled)																
Service / Maintenance Workers																
Others																
Total																

This report includes all of the company's permanent work force. For description of job categories, see Pages CC-27 through CC-29.

Check One: [ ] **Contractor** [ ] **Subcontractor**

COMPANY: _____ **DATE:** _____

EQUAL EMPLOYMENT OPPORTUNITY COMPLIANCE PROGRAM FOR

_____

Name of Company

The Company's Office of Business Opportunity Program shall consist of documented good faith efforts to comply with the goals, timetables, and objectives set forth in the following Affirmative Action steps:

A. City of Houston's Specific Equal Employment Opportunity Policy and Clause as contained in City Council Ordinance No. 78-1538, passed August 9, 1978.

B. Notice of Requirement for Office of Business Opportunity to ensure Equal Employment Opportunity (Executive Order 11246).

C. Standard Federal Equal Employment Opportunity Construction Contract Specifications (Executive Order 11246).

Project: _____

_____
Company Officer (Please Type)

_____ _____
Signature Date

NOTE: The penalty for making false statements in offers is prescribed in 18 U.S.C. 1001.

SPECIAL PROVISIONS
SPECIFIC EQUAL EMPLOYMENT OPPORTUNITY POLICY

1. GENERAL

   a. Equal employment opportunity requirements not to discriminate and to take affirmative action to assure equal employment opportunity are required by Executive Order 11246, as amended. The requirements set forth in these Special Provisions shall constitute the specific affirmative action requirements for Project activities under this Contract and shall supplement the notice of requirement for affirmative action to ensure equal employment opportunity and standard federal equal employment opportunity construction contract specifications.
   b. The Contractor shall work with the City and the Federal Government in carrying out equal employment opportunity obligations and in their review of his/her activities under the Contract.
   c. The prime Contractor and all Subcontractors holding subcontracts of $10,000 or more shall comply with the following minimum specific requirement activities of equal employment opportunity. The Contractor shall include these requirements in every subcontract of $10,000 or more with such modification of language as is necessary to make them binding on the Subcontractor.

2. EQUAL EMPLOYMENT OPPORTUNITY POLICY

   The Contractor shall accept as his/her operating policy the following statement which is designed to further the provision of equal employment opportunity to all persons without regard to their race, age, color, religion, sex, or national origin, and to promote the full realization of equal employment opportunity through a positive continuing program:

   It is the policy of this Company to assure that applicants are employed, and that employees are treated during employment, without regard to their race, religion, color, sex, or national origin. Such action shall include: employment, upgrading, demotion, or transfer; recruitment or recruitment advertising; layoff or termination; rates of pay or other forms of compensation; and selection for training, including apprenticeship.

3. EQUAL EMPLOYMENT OPPORTUNITY OFFICER

   The Contractor shall designate and make known to the City contracting officers an equal employment opportunity officer (hereinafter referred to as the EEO Officer) who must be capable of effectively administering and promoting an active Contractor program of equal employment opportunity and who must be assigned adequate authority and responsibilities to do so.

4. DISSEMINATION OF POLICY

a. All members of the Contractor's staff who are authorized to hire, supervise, promote, and discharge employees, or who recommend such action, or who are substantially involved in such action, will be made fully cognizant of, and will implement the Contractor's equal employment opportunity policy and contractual responsibilities to provide equal employment opportunity in each grade and classification of employment. To ensure that the above agreement will be met, the following actions shall be taken as a minimum:

(1) Periodic meetings of supervisory and personnel office employees shall be conducted before the start of work and then not less often than once every six months, at which time the Contractor's equal employment opportunity policy and its implementation will be reviewed and explained. The meetings shall be conducted by the EEO Officer or other knowledgeable company official.

(2) All new supervisory or personnel office employees will be given a thorough indoctrination by the EEO Officer, or other knowledgeable company official, covering all major aspects of the Contractor's equal employment opportunity obligations, within 30 days following their reporting for duty with the Contractor.

(3) The EEO Officer or appropriate company official shall instruct all employees engaged in the direct recruitment of employees for the Project relative to the methods followed by the Contractor in locating and hiring minorities and females.

b. In order to make the Contractor's equal employment opportunity policy known to all employees, prospective employees, and potential sources of employees, i.e., schools, employment agencies, labor unions (where appropriate), college placement officers, etc., the Contractor shall take the following actions:

(1) Notices and posters setting forth the Contractor's equal employment opportunity policy shall be placed in areas readily accessible to employees, applicants for employment, and potential employees.

(2) The Contractor's equal employment opportunity policy and the procedures to implement such policy shall be brought to the attention of employees by means of meetings, employee handbooks, or other appropriate means.

5. RECRUITMENT

a. When advertising for employees, the Contractor shall include in all advertisements for employees the notation "An Equal Opportunity Employer". All such advertisements will be published in newspapers, or

other publications, having a large circulation among minority groups in the area from which the Project work force would normally be derived.

b. The Contractor shall, unless precluded by a valid bargaining agreement, conduct systematic and direct recruitment through public and private employee-referral sources likely to yield qualified minority-group applicants, including, but not limited to, State employment agencies, schools, colleges, minority-group organizations, and female recruitment agencies. To meet this requirement, the Contractor shall, through his/her EEO Officer, identify sources of potential minority and female employees, and establish with such identified sources procedures whereby such group applicants may be referred to the Contractor for employment consideration.

In the event the Contractor has a valid bargaining agreement providing for exclusive hiring hall referrals, he/she is expected to observe the provisions of that agreement to the extent that the system permits the Contractor's compliance with equal employment opportunity Contract provisions. (The U. S. Department of Labor has held that where implementation of such agreements has the effect of discriminating against minorities or women, or obligates the Contractor to do the same, such implementation violates Executive Order 11246 as amended).

c. The Contractor shall encourage his/her present employees to refer female or minority-group applicants for employment by posting appropriate notices or bulletins in areas accessible to all such employees. In addition, information and procedures with regard to referring such applicants will be discussed with employees.

6. PERSONNEL ACTIONS

a. Wage, working conditions, and employee benefits shall be established and administered, and personnel actions of every type, including hiring, upgrading, promotion, transfer, demotion, layoff and termination, shall be taken without regard to race, color, religion, sex, national origin, or age. The following procedures shall be followed:

(1) The Contractor shall conduct periodic inspections of Project sites to ensure that working conditions and employee facilities do not indicate discriminatory treatment of Project-site personnel.

(2) The Contractor shall periodically evaluate the spread of wages paid within each classification to determine any evidence of discriminatory wage practices.

(3) The Contractor shall periodically review selected personnel actions in depth to determine whether there is evidence of discrimination. Where evidence is found, the Contractor shall promptly take corrective action. If the review indicates that the discrimination may extend beyond the actions reviewed, such corrective action shall include all affected persons.

(4) The Contractor shall promptly investigate all complaints of alleged discrimination made in connection with his/her obligations under this Contract, shall attempt to resolve such complaints, and shall take appropriate corrective action. If the investigation indicates that the discrimination may affect persons other than the complainant, such corrective action shall include such other persons. Upon completion of each investigation, the Contractor shall inform every complainant of all avenues of appeal.

7. TRAINING AND PROMOTION

a. The Contractor shall assist in locating, qualifying, and increasing the skills of minority-group and women employees and applicants for employment.

b. Consistent with the Contractor's work force requirements and as permissible under Federal and State regulations, the Contractor shall make full use of training programs, i.e., apprenticeship and on-the-job training programs, for the geographical area of Contract performance.

c. The Contractor shall advise employees and applicants for employment of available training programs and entrance requirements for each.

d. The Contractor shall periodically review the training and promotion potential of minority-group and women employees and shall encourage eligible employees to apply for such training and promotion.

8. UNIONS

If the Contractor relies in whole or in part upon unions as a source of employees, he/she shall use his/her best efforts to obtain the cooperation of such unions to increase minority groups and women within the unions, and to effect referrals by such unions of minority and female employees. Actions by the Contractor, either directly or through a contractor's association acting as his/her agent, will include the procedures set forth below:

a. The Contractor shall use best efforts to develop, in cooperation with the unions, joint training programs aimed toward qualifying more minority-group members and women for membership in the unions and increasing the skills of minority-group employees and women so that they may qualify for higher-paying employment.

b. The Contractor shall use best efforts to incorporate an equal employment opportunity clause into all union agreements to the end that such unions will be contractually bound to refer applicants without regard to their race, color, religion, sex, national origin, or age.

c. The Contractor is to obtain information as to the referral practices and policies of the labor union, except that to the extent such information is within the exclusive possession of the labor union, and such labor union refuses to furnish such information to the Contractor, the Contractor shall so certify to the City and shall set forth what efforts have been made to obtain such information.

d. In the event the union is unable to provide the Contractor with a reasonable flow of minority and women referrals within the time limit set forth in the collective bargaining agreement, the Contractor shall, through independent recruitment efforts, fill the employment vacancies without regard to race, color, religion, age, sex, or national origin, making full efforts to obtain qualified and/or qualifiable minority group persons and women. (The U. S. Department of Labor has held that it shall be no excuse that the union with which the Contractor has a collective bargaining agreement providing for exclusive referral failed to refer minority employees.) In the event the union referral practice prevents the Contractor from meeting the obligations pursuant to Executive Order 11246, as amended, and these special provisions, such Contractor shall immediately notify the City.

9. SUBCONTRACTING

a. The Contractor shall use his/her best efforts to solicit bids from and to utilize minority-group and female subcontractors or subcontractors with meaningful minority-group and/or female representation among their employees.

b. The Contractor shall use his/her best efforts to assure Subcontractors' compliance with their equal employment opportunity obligations.

10. RECORDS AND REPORTS

a. The Contractor shall keep such records as are necessary to determine compliance with the Contractor's equal employment opportunity obligations. The records kept by the Contractor will be designed to indicate:

(1) The number of minority and non-minority group members and women employed in each work classification on the Project.

(2) The progress and efforts being made in cooperation with unions to increase employment opportunities for minorities and women (applicable only to contractors who rely in whole or in part on unions as a source of their work force).

(3) The progress and efforts being made in locating, hiring, training, qualifying, and upgrading minority and female employees.

(4) The progress and efforts being made in securing the services of female and minority subcontractors.

b. All records, including payrolls, must be retained for a period of three years following completion of the Contract work and shall be available at reasonable times and places for inspection by authorized representatives of the City and/or the appropriate federal agency.

CITY OF HOUSTON, TEXAS

EQUAL EMPLOYMENT OPPORTUNITY CLAUSE

Pursuant to City Council Ordinance No. 78-1538, passed August 9, 1978, all contracts entered into by the City of Houston involving the expenditure of $10,000 or more, shall incorporate the following Equal Employment Opportunity Clause:

1. The Contractor, Subcontractor, vendor, Supplier, or lessee shall not discriminate against any employee or applicant for employment because of race, religion, color, sex, national origin, or age. The Contractor, Subcontractor, vendor, Supplier, or lessee shall take affirmative action to ensure that applicants are employed and that employees are treated during employment without regard to their race, religion, color, sex, national origin, or age. Such action will include, but not be limited to, the following: employment; upgrading; demotion or transfer; recruitment advertising; layoff or termination; rates of pay or other forms of compensation; and selection for training, including apprenticeship. The Contractor, Subcontractor, vendor, Supplier, or lessee agrees to post in conspicuous places available to employees, and applicants for employment, notices to be provided by the City setting forth the provisions of this Equal Employment Opportunity Clause.

2. The Contractor, Subcontractor, vendor, Supplier, or lessee states that all qualified applicants will receive consideration for employment without regard to race, religion, color, sex, national origin, or age.

3. The Contractor, Subcontractor, vendor, Supplier, or lessee shall send to each labor union or representatives of workers with which it has a collective bargaining agreement or other contract or understanding, a notice to be provided by the agency contracting officer advising the said labor union or workers' representative of the Contractor's and Subcontractor's commitments under Section 202 of Executive Order No. 11246, and shall post copies of the notice in conspicuous places available to employees and applicants for employment.

4. The Contractor, Subcontractor, vendor, Supplier, or lessee will comply with all provisions of Executive Order No. 11246 and the rules, regulations, and relevant orders of the Secretary of Labor or other Federal Agency responsible for enforcement of the equal opportunity and affirmative action provisions applicable, and shall likewise furnish all information and reports required by the Mayor and/or Contractor Compliance Officers for purposes of investigation to ascertain and effect compliance with this program.

5. The Contractor, Subcontractor, vendor, Supplier, or lessee shall furnish all information and reports required by Executive Order No. 11246, and by the rules, regulations, and orders of the Secretary of Labor, or pursuant thereto, and shall permit access to all books, records, and accounts by the appropriate City and Federal officials for purposes of investigation to ascertain compliance with such rules, regulations, and orders. Compliance reports filed at such times as directed shall contain information as to the employment practice policies, program, and work force statistics of the Contractor, Subcontractor, vendor, Supplier, or lessee.

6. In the event of a Contractor's, Subcontractor's, vendor's, Supplier's, or lessee's non-compliance with the non-discrimination clause of this Contract or with any of such rules, regulations, or orders, this Contract may be canceled, terminated, or suspended in whole or in part, and the Contractor, Subcontractor, vendor, Supplier, or lessee may be declared ineligible for further City contracts in accordance with procedures provided in Executive Order No. 11246, and such other sanctions may be imposed and remedies invoked as provided in said Executive Order, or by rule, regulation, or order of the Secretary of Labor, or as may otherwise be provided by law.

7. The Contractor shall include the provisions of paragraphs 1 through 8 of this Equal Employment Opportunity Clause in every subcontract or purchase order unless exempted by rules, regulations, or orders of the Secretary of Labor issued pursuant to Section 204 of Executive Order No. 11246 of September 24, 1965 so that such provisions will be binding upon each Subcontractor or vendor. The Contractor shall take such action with respect to any subcontractor or purchase order as the contracting agency may direct as a means of enforcing such provisions, including sanctions for noncompliance; provided, however, that in the event the Contractor becomes involved in, or is threatened with litigation with a Subcontractor or vendor as a result of such direction by the contracting agency, the Contractor may request the United States to enter into such litigation to protect the interests of the United States.

8. The Contractor shall file and shall cause each of his Subcontractors, if any, to file compliance reports with the City in the form and to the extent as may be prescribed by the Mayor's Office of Business Opportunity. Compliance reports filed at such times as directed shall contain information as to the practices, policies, programs, employment policies, and employment statistics of the Contractor and each Subcontractor.

NOTICE OF REQUIREMENT FOR AFFIRMATIVE ACTION
TO ENSURE EQUAL EMPLOYMENT OPPORTUNITY
(EXECUTIVE ORDER 11246)

1. The Offeror's or Bidder's attention is called to the "Equal Opportunity Clause" and the "Standard Federal Equal Employment Opportunity Construction Contract Specifications" set forth herein.

2. The goals and timetables for minority and female participation, expressed in percentage terms for the Contractor's aggregate work force in each trade on all construction work in the covered area, are as follows:

Timetable	Goals for Minority Participation for Each Trade	Goals for Female Participation for Each Trade
	26.2% - 27.3%	6.9%

These goals are applicable to all the Contractor's construction work (whether or not it is Federal or Federally-assisted) performed in the covered area.

The Contractor's compliance with the Executive Order and the regulations in 41 CFR Part 60-4 shall be based on its implementation of the Equal Opportunity Clause, specific affirmative action obligations required by the specifications set forth in 41 CFR 60-4.3(a), and its efforts to meet the goals established for the geographical area where the Contract resulting from this solicitation is to be performed. The hours of minority and female employment and training must be substantially uniform throughout the length of the Contract, and in each trade, and the Contractor shall make a good faith effort to employ minorities and women evenly on each of its projects. The transfer of minority or female employees or trainees from Contractor to Contractor or from project to project for the sole purpose of meeting the Contractor's goals shall be a violation of the Contract, the Executive Order, and regulations in 41 CFR part 60-4. Compliance with the goals will be measured against the total work hours performed.

3. The Contractor shall provide written notification to the Director of the Office of Federal Contract Compliance Programs within 10 working days of award of any construction subcontract in excess of $10,000 at any tier for construction work under the Contract resulting from this solicitation. The notification shall list the name, address, and telephone number of the Subcontractor; employer identification number; estimated dollar amount of the subcontract; estimated starting and completion dates of the subcontract; and the geographical area in which the Contract is to be performed.

4. As used in this Notice, and in the Contract resulting from this solicitation, the "covered area" is The Houston, Texas Standard Metropolitan Statistical Area.

STANDARD FEDERAL EQUAL EMPLOYMENT OPPORTUNITY
CONSTRUCTION CONTRACT SPECIFICATIONS
(EXECUTIVE ORDER 11246)

1. As used in these specifications:

   a. "Covered area" means the geographical area described in the solicitation from which this Contract resulted;

   b. "Director" means Director, Office of Federal Contract Compliance Programs, United States Department of Labor, or any person to whom the Director delegates authority;

   c. "Employer identification number" means the Federal Social Security number used on the Employer's Quarterly Federal Tax Return, U. S. Treasury Department Form 941.

   d. "Minority" includes:

      (i) Black (all persons having origins in any of the Black African racial groups not of Hispanic origin);

      (ii) Hispanic (all persons of Mexican, Puerto Rican, Cuban, Central or South American, or other Spanish culture or origin regardless of race);

      (iii) Asian and Pacific Islander (all persons having origins in any of the original peoples of the Far East, Southeast Asia, the Indian Subcontinent, or the Pacific Islands); and

      (iv) American Indian or Alaskan Native (all persons having origins in any of the original peoples of North America and maintaining identifiable tribal affiliations through membership and participation or community identification).

2. Whenever the Contractor, or any Subcontractor at any tier, subcontracts a portion of the work involving any construction trade, it shall physically include in each subcontract in excess of $10,000 the provisions of these specifications and the Notice which contains the applicable goals for minority and female participation and which is set forth in the solicitations from which this Contract resulted.

3. If the Contractor is participating (pursuant to 41 CFR 60-4.5) in a Hometown Plan approved by the U. S. Department of Labor in the covered area either individually or through an association, its affirmative action obligations on all work in the Plan area (including goals and timetables) shall be in accordance with that Plan for

those trades which have unions participating in the Plan. Contractors must be able to demonstrate their participation in and compliance with the provisions of any such Hometown Plan. Each Contractor or Subcontractor participating in an approved Plan is individually required to comply with its obligations under the EEO clause, and to make a good faith effort to achieve each goal under the Plan in each trade in which it has employees. The overall good faith performance by other Contractors or Subcontractors toward a goal in an approved Plan does not excuse any covered Contractor's or Subcontractor's failure to take good efforts to achieve the Plan goals and timetables.

4. The Contractor shall implement the specific affirmative action standards provided in Paragraphs 7a through p of these specifications. The goals set forth in the solicitation from which this Contract resulted are expressed as percentages of the total hours of employment and training of minority and female utilization the Contractor should reasonably be able to achieve in each construction trade in which it has employees in the covered area. The Contractor is expected to make substantially uniform progress toward its goals in each craft during the period specified.

5. Neither the provisions of any collective bargaining agreement, nor the failure by a union with whom the Contractor has a collective bargaining agreement to refer either minorities or women, shall excuse the Contractor's obligations under these specifications, Executive Order 11246, or the regulations promulgated pursuant thereto.

6. In order for the non-working training hours of apprentices and trainees to be counted in meeting the goals, such apprentices and trainees must be employed by the Contractor during the training period, and the Contractor must have made a commitment to employ the apprentices and trainees at the completion of their training, subject to the availability of employment opportunities. Trainees must be trained pursuant to training programs approved by the U. S. Department of Labor.

7. The Contractor shall take specific affirmative actions to ensure equal employment opportunity. The evaluation of the Contractor's compliance with these specifications shall be based upon its effort to achieve maximum results from its actions. The Contractor shall document these efforts fully, and shall implement affirmative action steps at least as extensive as the following:

   a. Ensure and maintain a working environment free of harassment, intimidation, and coercion at all sites, and in all facilities at which Contractor's employees are assigned to work. The Contractor, where possible, shall assign two or more women to each construction project. The Contractor shall specifically ensure that all foremen, superintendents, and other on-site supervisory personnel are aware of and carry out the Contractor's obligation to maintain such a working environment, with specific attention to minority or female individuals working at such sites or in such facilities.

b. Establish and maintain a current list of minority and female recruitment sources; provide written notification to minority and female recruitment sources and to community organizations when the Contractor or its unions have employment opportunities available, and maintain a record of the organizations' responses.

c. Maintain a current file of the names, addresses, and telephone numbers of each minority and female off-the-street applicant and minority or female referral from a union, a recruitment source, or community organization and of what action was taken with respect to each such individual. If such individual was sent to the union hiring hall for referral and was not referred back to the Contractor by the union or, if referred, not employed by the Contractor, this shall be documented in the file with the reason therefor, along with whatever additional actions the Contractor may have taken.

d. Provide immediate written notification to the Director when the union or unions with which the Contractor has a collective bargaining agreement has not referred to the Contractor a minority person or woman sent by the Contractor, or when the Contractor has other information that the union referral process has impeded the Contractor's efforts to meet its obligations.

e. Develop on-the-job training opportunities and/or participate in training programs for the area which expressly include minorities and women, including upgrading programs and apprenticeship and trainee programs relevant to the Contractor's employment needs, especially those programs funded or approved by the Department of Labor. The Contractor shall provide notice of these programs to the sources compiled under 7b above.

f. Disseminate the Contractor's EEO policy by providing notice of the policy to unions and training programs and requesting their cooperation in assisting the Contractor in meeting its EEO obligations by including it in any policy manual and collective bargaining agreement; by publicizing it in the company newspaper, annual report, etc.; by specific review of the policy with all management personnel and with all minority and female employees at least once a year; and by posting the company EEO policy on bulletin boards accessible to all employees at each location where construction work is performed.

g. Review, at least annually, the company's EEO policy and affirmative action obligations under these specifications with all employees having any responsibility for hiring, assignment, layoff, termination, or other employment decisions, including specific review of these items with on-site supervisory personnel such as superintendents, general foremen, etc., prior to the initiation of construction work at any job site. A written record shall be made and maintained identifying the time and place of

these meetings, persons attending, subject matter discussed, and disposition of the subject matter.

h. Disseminate the Contractor's EEO policy externally by including it in any advertising in the news media, specifically including minority and female news media, and providing written notification to and discussing the Contractor's EEO policy with other contractors and subcontractors with whom the Contractor does or anticipates doing business.

i. Direct its recruitment efforts, both oral and written, to minority, female and community organizations, to schools with minority and female students, and to minority and female recruitment and training organizations serving the Contractor's recruitment area and employment needs. Not later than one month prior to the date for the acceptance of applications for apprenticeship or other training by any recruitment source, the Contractor shall send written notification to organizations such as the above, describing the openings, screening procedures, and tests to be used in the selection process.

j. Encourage present minority and female employees to recruit other minority persons and women and, where reasonable, provide after school, summer, and vacation employment to minority and female youth both on the site and in other areas of a Contractor's work force.

k. Validate all tests and other selection requirements where there is an obligation to do so under 41 CFR Part 60-3.

l. Conduct, at least annually, an inventory and evaluation at least of all minority and female personnel for promotional opportunities and encourage these employees to seek or to prepare, through appropriate training, etc., for such opportunities.

m. Ensure that seniority practices, job classifications, work assignments, and other personnel practices do not have a discriminatory effect by continually monitoring all personnel and employment-related activities to ensure that the EEO policy and the Contractor's obligations under these specifications are being carried out.

n. Ensure that all facilities and company activities are nonsegregated except that separate or single-user toilet and necessary changing facilities shall be provided to assure privacy between the sexes.

o. Document and maintain a record of all solicitations of offers for subcontracts from minority and female construction contractors and suppliers, including circulation of solicitations to minority and female contractor associations and other business associations.

p. Conduct a review, at least annually, of all supervisors' adherence to and performance under the Contractor's EEO policies and affirmative action obligations.

8. Contractors are encouraged to participate in voluntary associations which assist in fulfilling one or more of their affirmative action obligations (7a through p). The efforts of a contractor association, joint contractor union, contractor-community, or other similar group of which the Contractor is a member and participant, may be asserted as fulfilling any one or more of its obligations under 7a through p of these Specifications provided that the Contractor actively participates in the group, makes every effort to assure that the group has a positive impact on the employment of minorities and women in the industry, ensures that the concrete benefits of the program are reflected in the Contractor's minority and female work force participation, makes a good faith effort to meet its individual goals and timetables, and can provide access to documentation which demonstrates the effectiveness of actions taken on behalf of the Contractor. The obligation to comply, however, is the Contractor's and failure of such a group to fulfill an obligation shall not be a defense for the Contractor's noncompliance.

9. A single goal for minorities and a separate single goal for women have been established. The Contractor, however, is required to provide equal employment opportunity and to take affirmative action for all minority groups, both male and female, and all women, both minority and non-minority. Consequently, the Contractor may be in violation of the Executive Order if a particular group is employed in a substantially disparate manner (for example, even though the Contractor has achieved its goals for women generally, the Contractor may be in violation of the Executive Order if a specific minority group of women is under utilized).

10. The Contractor shall not use the goals and timetables or affirmative action standards to discriminate against any person because of race, color, religion, sex, or national origin.

11. The Contractor shall not enter into any subcontract with any person or firm debarred from Government contracts pursuant to Executive Order 11246.

12. The Contractor shall carry out such sanctions and penalties for violation of these specifications and of the Equal Opportunity Clause, including suspension, termination, and cancellation of existing subcontracts as may be imposed or ordered pursuant to Executive Order 11246, as amended, and its implementing regulations, by the Office of Federal Contract Compliance Programs. Any Contractor who fails to carry out such sanctions and penalties shall be in violation of these specifications and Executive Order 11246, as amended.

13. The Contractor, in fulfilling its obligations under these specifications, shall implement specific affirmative action steps, at least as extensive as those standards prescribed in Paragraph 7 of these specifications, so as to achieve maximum results from its efforts to ensure equal employment opportunity. If the

Contractor fails to comply with the requirements of the Executive Order, the implementing regulations, or these specifications, the Director shall proceed in accordance with 41 CFR 60-4.B.

14. The Contractor shall designate a responsible official to monitor all employment-related activity to ensure that the company EEO policy is being carried out, to submit reports relating to the provisions hereof as may be required by the Government, and to keep records. Records shall at least include for each employee the name, address, telephone number, construction trade, union affiliation, if any, employee identification number when assigned, social security number, race, sex, status (e.g., mechanic, apprentice, trainee, helper, or laborer), dates of changes in status, hours worked per week in the indicated trade, rate of pay, and locations at which the work was performed. Records shall be maintained in an easily-understandable and retrievable form; however to the degree that existing records satisfy this requirement, contractors shall not be required to maintain separate records.

15. Nothing herein provided shall be construed as a limitation upon the application of other laws which establish different standards of compliance or upon the application of requirements for the hiring of local or other area residents (e.g., those under the Public Works Employment Act of 1977 and the Community Development Block Grant Program).

DESCRIPTION OF JOB CATEGORIES

Officials, Managers, and Administrators

Occupations requiring administrative personnel who set board policies, exercise overall responsibility for the execution of these policies, or provide specialized consultation on a regional, district, area basis, or direct individual departments or special phases of a firm's operations.

Includes: Officials, executives, middle management, plant managers, department managers, superintendents, salaried foremen who are members of management, purchasing agents, buyers, bureau chiefs, directors, deputy directors, wardens, examiners, sheriffs, police and fire chiefs, and kindred workers.

Professionals

Occupations which require specialized and theoretical knowledge which is usually acquired through college or experience of such kind and amount as to provide a comparable background.

Includes: Accountants, auditors, airplane pilots and navigators, architects, artists, chemists, designers, dieticians, editors, engineers, lawyers, librarians, mathematicians, natural scientists, registered professional nurses, personnel and labor relations workers, physical scientists, teachers, social workers, doctors, psychologists, economists, systems analysts, employment and vocational rehabilitation counselors, instructors, police and fire captains and lieutenants, and kindred workers.

Paraprofessionals

Occupations in which workers perform some of the duties of a professional or technician in a supportive role, which usually requires less formal training and/or experience normally required for professional or technical status. Such positions may fall within an identified pattern of a "New Careers" concept.

Includes: Library assistants, medical aides, child support workers, police auxiliary, welfare service aides, recreation assistants, homemakers aides, home health aides, and kindred workers.

Technicians

Occupations requiring a combination of basic scientific knowledge and manual skill which can be obtained through about two (2) years of post high school education, such as is offered in many technical institutes and junior colleges, or through equivalent on-the-job training.

Includes: Computer programmers and operators, draftsmen, engineering aides, junior engineers, mathematical aides, licensed practical or vocational nurses, photographers, radio operators, scientific assistants, surveyors, technical illustrators, technicians (medical, dental, electronics, physical sciences), police and fire sergeants, and kindred workers.

Protective Service Workers

Occupations in which workers are entrusted with public safety, security, and protection from destructive forces.

Includes: Police patrol officers, fire fighters, guards, deputy sheriffs, bailiffs, correctional officers, detectives, marshals, harbor patrol officers, and kindred workers.

Sales Workers

Occupations engaging wholly or primarily in direct selling.

Includes: Advertising agents and salespersons, insurance agents and brokers, real estate agents and brokers, stock and bond salespersons, demonstrators, salespersons and sales clerks, grocery clerks, cashiers, and kindred workers.

Office and Clerical

Occupations in which workers are responsible for internal and external communications, recording and retrieval of data and/or information and other paper work required in an office predominantly non-manual, though some manual work not directly involved with altering or transporting the products is included.

Includes: Bookkeepers, cashiers, collectors (bills and accounts), messengers and office helpers, office machine operators, shipping and receiving clerks, stenographers, typists and secretaries, telegraph and telephone operators, court transcribers, hearing reporters, statistical clerks, dispatchers, license distributors, payroll clerks, and kindred workers.

Skilled Craft Workers

Occupations in which workers perform jobs which require special manual skill through on-the-job training and experience, or through apprenticeship or other formal training programs. These workers exercise considerable independent judgment and usually receive an extensive period of training.

Includes: The building trades, hourly paid foremen and leadmen who are not members of management, mechanics and repairmen, skilled machining occupations, compositors and typesetters, electricians, engravers, job setters

(metal), motion picture projectionists, pattern and model makers, stationary engineers, tailors, heavy equipment operators, carpenters, and kindred workers.

Operatives (semi-skilled)

Workers who operate machine or processing equipment or perform other factory-type duties of intermediate skill level which can be mastered in a few weeks and require only limited training.

Includes: Apprentices (auto mechanics), plumbers, bricklayers, carpenters, electricians, mechanics, building trades, metal workers, machinists, printing trades, operatives, attendants (auto service and parking), blasters, chauffeurs, deliverymen, dressmakers and seamstresses (except factory), dryers, furnacemen, heaters (metal), laundry and dry cleaning operatives, milliners, miners, motormen, oilers, greasers, etc. (except auto), painters (except construction and maintenance), photographic process workers, stationary firemen, truck and tractor drivers, weavers (textile), welders and flame cutters, and kindred workers.

Laborers (unskilled)

Workers in manual occupations which generally require no special training. These workers perform elementary duties that may be learned in a few days and require the application of little or no independent judgment.

Includes: Garage workers, car washers and greasers, gardeners (except farm) and groundskeepers, longshoremen and stevedores, lumbermen, craftsmen, and wood choppers, laborers performing lifting, digging, mixing, loading, and pulling operations, and kindred workers.

Service/Maintenance Workers

Occupations in which workers perform duties which result in or contribute to the comfort, convenience, hygiene or safety for the general public or which contribute to the upkeep and care of buildings, facilities or grounds, or public property. Workers in this group may operate machinery.

Includes: Chauffeurs, laundry and dry cleaning operatives, truck drivers, trash collectors, custodial personnel, gardeners and groundskeepers, construction laborers, attendants (hospital and other institutions), professional and personal service, counter and fountain workers, elevator operators, firemen and fire protection, guards, watchmen and doorkeepers, stewards, porters, waiters, and kindred workers.

CERTIFICATION BY PROPOSED SUBCONTRACTOR REGARDING EQUAL EMPLOYMENT OPPORTUNITY

_____
Name of Prime Contractor

_____
Address

GENERAL

In accordance with Executive Order 11246 (30 F.R. 12319-25), the implementing rules and regulations thereof, and orders of the Secretary of Labor, a certification regarding Equal Opportunity is required of bidders or prospective contractors and their proposed subcontractors prior to the award of contracts or subcontracts.

SUBCONTRACTOR'S CERTIFICATION

Subcontractor's Name: _____

Address: _____

IRS Employer Identification Number: _____

Job Description : _____

1. Participation in a previous contract or subcontract.

   a. Subcontractor has participated in a previous contract or subcontract subject to the Equal Opportunity Clause. ____YES ____NO

   b. Compliance reports were required to be filed in connection with such contract or subcontract. ____YES ____NO

   c. Subcontractor has filed all compliance reports required by Executive Orders 10925, 11114, 11246, or by regulations of the Equal Employment Opportunity Commission issued pursuant to Title VII of the Civil Rights Act of 1964. ____YES ____NO

   d. If answer of Item c. is "No", please explain in detail on reverse side of this certification.

2. Dollar amount of proposed subcontract: $ _____

3. Anticipated performance period in days: _____

4. Expected total number of employees to perform the proposed subcontract: _____

5. Nonsegregated facilities.

   a. Notice to prospective federally-assisted construction contractors
      (1) A Certification of Nonsegregated Facilities, as required by the May 9, 1967, order (32 F.R. 7439, May 19, 1967) on Elimination of Segregated Facilities, by the Secretary of Labor, must be submitted to the Contractor prior to the award of a subcontract exceeding $10,000 which is not exempt from the provisions of the Equal Opportunity Clause.
      (2) Contractors receiving subcontract awards exceeding $10,000 which are not exempt from the provisions of the Equal Opportunity Clause will be required to provide for the forwarding of this notice to prospective subcontractors for supplies and construction contracts where the subcontracts exceed $10,000 and are not exempt from the provisions of the Equal Opportunity clause.

   b. Certification of non-segregated facilities

      The federally-assisted construction contractor certified that he/she does not maintain or provide any segregated facilities at any of his/her establishments, and does not permit employees to perform their services at any location, under his/her control, where segregated facilities are maintained. The federally-assisted construction Contractor certifies further that he/she will not maintain or provide any segregated facilities at any of his/her establishments, and will not permit employees to perform their services at any location, under his/her control, where segregated facilities are maintained. The federally-assisted construction Contractor agrees that a breach of this certification is a violation of the Equal Opportunity Clause in this Contract. As used in this certification, the term "segregated facilities" means any waiting rooms, work areas, restrooms and washrooms, restaurants, and other eating areas, time clocks, locker rooms and other storage or dressing areas, parking lots, drinking fountains, recreation or entertainment areas, transportation, and housing facilities provided for employees which are segregated by explicit directive or are in fact segregated on the basis of race, creed, color, or national origin because of habit, local custom, or otherwise. The federally-assisted construction Contractor agrees that (except where he/she has obtained identical certifications from proposed Subcontractors for specific time periods) he/she will obtain identical certifications in duplicate from proposed Subcontractors prior to the award of subcontracts exceeding $10,000 which are not exempt from the provisions of the Equal Opportunity Clause, and that he/she will retain the duplicate of such certifications in his/her files. The Contractor will include the original in his/her Bid Package.

6. Race or ethnic group designation of bidder. Enter race or ethnic group in appropriate box:

☐ White ☐ Black ☐ Hispanic

☐ Pacific Islander, Asian ☐ American Indian, Aleut.

7. Gender

☐ Male ☐ Female

REMARKS: _

Certification - The information above is true and complete to the best of my knowledge and belief.

_____
Company Officer (Please Type)

_____ _____
Signature Date

NOTE: The penalty for making false statements in offers is prescribed in 18 U.S.C. 1001.

Certification by Proposed Material Suppliers, Lessors, and Professional Service Providers Regarding Equal Employment Opportunity

Company Name: _____ $_____
(Supplier, Lessor, Professional Service Provider) (Amount of Contract)

Company Address: _____

Company Telephone Number: _____ Fax: _____

E-mail Address: _____

Web Page/URL Address: _____

Company Tax Identification Number: _____

Project No.: [*WBS/CIP/AIP/File No.*] _____

Project Name: [*Legal Project Name*] _____

In accordance with the City of Houston Ordinance 78-1538, Supplier/Lessor/Professional Service Provider represents to be an equal opportunity employer and agrees to abide by the terms of the Ordinance. This certification is required of all Suppliers/Lessors/Professional Service Providers (herein Supplier) with contracts in the amount of $10,000.00 or more.

[ ] Yes [ ] No Supplier agrees not to discriminate against any employee or applicant for employment because of race, religion, color, sex, national origin, or age.

[ ] Yes [ ] No Supplier agrees that all qualified applicants will receive consideration for employment without regard to race, religion, color, sex, national origin, or age.

[ ] Yes [ ] No Supplier will comply with all provisions of Executive Order No. 11246 and rules, regulations and applicable orders of the Department of Labor or other Federal Agency responsible for enforcement of applicable equal opportunity and affirmative action provisions and will likewise furnish all information and reports required by the Mayor or Contract Compliance Officers for the purpose of investigation to ascertain and effect compliance with the City of Houston's Office of Affirmative Action and Contract Compliance.

[ ] Yes [ ] No The Supplier shall file and cause their sub-tier contractors to file compliance reports with the City in the form and to the extent as may be prescribed by the Mayor or Contract Compliance Officers. Compliance reports filed at such times as directed shall contain information including, but not limited to, the practices, policies, programs, and employment policies.

I hereby certify that the above information is true and correct.

_____ _____
COMPANY OFFICER (Signature) DATE

_____
NAME AND TITLE (Print or type)

END OF DOCUMENT

Document 00808

REQUIREMENTS FOR THE CITY OF HOUSTON PROGRAM FOR MINORITY, WOMEN, AND SMALL BUSINESS ENTERPRISES AND PERSONS WITH DISABILITIES ENTERPRISES (PDBE)

CONSTRUCTION CONTRACTS

I. GENERAL

A. CITY AUTHORITIES

1. The "OBO Director" is the City of Houston's Office of Business Opportunity Director, or his or her designee.
City of Houston
611 Walker Street, 7th Floor
Houston, Texas 77002

2. The "Contracting Department" for this Project is the City of Houston Department specified in Document 00520 – Agreement.

3. The "Project Manager" is for this Project specified in Document 00550 – Contract Approval Notification.

II. REOCCURRING REPORTS THAT MUST BE SUBMITTED DURING THE COURSE OF THE CONTRACT:

A. MWSBE MONTHLY REPORT PROCESS

The Contractor shall complete the MWSBE Monthly Utilization Report in the Contract Compliance and Monitoring System (available at https://houston.mwdbe.com/).

B. The Contractor shall comply with further, applicable instructions regarding reporting and compliance as provided in Sections III.E and III.I below.

I. BUSINESS ENTERPRISE PROGRAM REQUIREMENTS:

A. PURPOSE

This Document facilitates implementation of City of Houston, Tex. Code of Ordinances Chapter 15, Article V, § 15-81 et seq., relating to MWSBE contract participation, and Code of Ordinances Chapter 15, Article VI, § 15-90 et seq., relating to PDBE contract participation (collectively, the "Business Enterprise Program or "MWSBE"). City of Houston, Tex. Ordinance 2013-0428, May 8, 2013.

B. POLICY

It is the policy of the City to encourage the full participation of Minority and Women-owned Business Enterprises, Small Business Enterprises, and Persons with Disabilities Business Enterprises in all phases of its procurement activities and to afford them a full and fair opportunity to compete for City contracts at all levels.

C. POLICY ELEMENTS

1. The Contractor agrees to ensure that MWSBE firms have a full and fair opportunity to participate in the performance of City contracts. In this regard the Contractor shall make all reasonable Good Faith Efforts to meet the Contract Goals for this Contract.

2. The Contractor and any Subcontractor shall not discriminate on the basis of race, color, religion, national origin, or sex in the performance of City contracts.

3. Contractor's performance in meeting the Participation Plan Percentage will be monitored during the construction phase of the Contract by the OBO Director and Contracting Department.

D. PERCENTAGE GOALS

The MWSBE goals and PDBE goals, if any, for the Work are specified in Document 00800 – Supplementary Conditions Goals.

E. CONTRACTOR RESPONSIBILITIES

1. Prior to Award:

The Bidder shall submit MWSBE documents in accordance with the requirements of Document 00410 – Bid Form Part A.

a. In accordance with the Code of Ordinances and the OBO Good Faith Efforts Policy (Attachment A), the Department shall approve an Apparent Low Bidder's MWSBE Participation Plan–Document 00470 (the "Bidder's Plan" or "Plan") within 3 business days of the Bid Opening only if the Department representative determines that Bidder's Plan meets the advertised Contract Goal and is administratively complete.

b. If the Department cannot approve the Bidder's Plan, it shall forward the Plan to the OBO Director, who shall review the Bidder's Plan, and if applicable, the Bidder's Document 00471 (Record of Good Faith Efforts) and Document 00472 (Pre-Award Deviation Request) and determine whether the Bidder has made Good Faith Efforts to meet the Contract Goals within 10 business days of the Bid Opening.

c. If the OBO Director determines that the Bidder has failed to provide a valid participation plan or make Good Faith Efforts or if the Bidder fails to provide documents and associated information required by this Document 00808 or reasonably requested in writing by the OBO Director, the OBO Director may declare the Bidder to be non-responsible.

d. If the OBO Director determines that the Bidder has made Good Faith Efforts, the Director may approve the Bidder's Contract Goal Deviation request. Thereafter, the Bidder/Contractor shall be bound by the Plan, as approved by the OBO Director.

e. The Contractor shall:

(1) ensure that all MWSBE firms listed in the Plan are certified by the Office of Business Opportunity prior to bid date. Qualified, non-certified firms may obtain priority consideration for certification if no more than two firms are certified with the same capability as the non-certified firm.

(2) execute written contracts with all certified Subcontractors and Suppliers. All such contracts must be executed and sent to the OBO Director and Contracting Department within 30 days after the date of the Notice to Proceed and must include provisions set forth in Articles 3 and 5 of Document 00700 - General Conditions.

(3) designate an MWSBE liaison officer who will administer the Contractor's MWSBE program and who shall document and maintain records of Good Faith Efforts to subcontract with MWSBE Subcontractors and Suppliers.

2. After Award:

a. The Contractor shall submit MWSBE Monthly Utilization Reports, requested in Article II above.

b. The Contractor shall complete and submit to the OBO Director a Post-Award Deviation Request–Document 00572 ("Post-Award Deviation Request") if the Contractor reasonably believes that it will not achieve the Business Enterprise Program Participation Plan Percentage documented in the Plan. The Contractors shall also submit to the OBO Director, with a Copy to the Contracting Department, a Record of Post-Award Good Faith Efforts (Document 00571) for each Certified Firm that the Contractor does not use in accordance with the Approved Plan before the Contractor uses another firm to perform the work.

c. The Contractor shall conform to the Plan unless the OBO Director grants a Post-Award Deviation Request. The OBO Director shall approve or reject a Deviation Request within 5 business days of receipt of the Deviation Request.

d. The OBO Director shall grant a Post-Award Deviation Request if

(1) for a reason beyond the Contractor's control, the Contractor is unable to use the certified MWSBE firm in the Plan to perform the specified work. In such cases, the Contractor shall use and document Good Faith Efforts to find a similarly qualified, certified MWSBE firm to perform such specified work; or

(2) the Contractor reasonably believes that, due to a change of scope, execution of the work in accordance with the directions from the Contracting Department is unlikely to meet the terms of the Plan. In such cases, the Contractor shall use and document Good Faith efforts to achieve a reasonable amount of MWSBE participation on the remaining work on the Contract.

(3) The OBO Director shall not unreasonably withhold approval of a Post-Award Deviation Request.

e. After the Date of Substantial Completion, the OBO Director shall evaluate the Contractor's Good Faith Efforts towards meeting the Plan, as it may amended.

f. If the Contractor fails to conform to the Plan and fails to submit a Post-Award Deviation Request or provide documents and associated information required by the Good Faith Efforts Policy or reasonably requested in writing by the OBO Director, the OBO Director may impose sanctions in accordance with Article VI of this Document 00808.

F. ELIGIBILITY OF MWSBE FIRMS FOR SUBCONTRACTING

1. To ensure that the City's Business Enterprise Program benefits only those firms that are owned and controlled by a minority person(s), a woman (women),a person(s) with a disability, or a small business enterprise, the Office of Business Opportunity will certify the eligibility of MWSBE and PDBE Contractors, Subcontractors, and Suppliers. Contact the Office of Business Opportunity Certification Section at 832-393-0600 for information regarding certification.

2. The Office of Business Opportunity maintains a Certified Minority, Women and Small Business Enterprises and Disabilities Business Enterprises Directory on the City's website. This Directory also lists federally-designated Disadvantaged Business Enterprises (DBEs).

NOTE: MWSBE firms, even if certified by another agency, may not qualify for Contract Goals unless certified by the Office of Business Opportunity prior to acceptance of the Participation Plan.

G. DETERMINATION OF MWSBE PARTICIPATION

MWSBE participation shall be counted toward meeting the Contract Goals in response to the following:

1. Once a firm is certified as a MWSBE firm, the total dollar value of the subcontract awarded to the MWSBE firm is counted toward the Contract Goals (See Sections III.G.4 and III.G.5 below). Safety and Participation goals do not count as a single goal concerning MWSBE/DBE requirements.

2. When the Contractor or Subcontractor is in a joint venture with one or more MWSBE firms, the OBO Director shall determine the percent of participation resulting from such joint venture to be counted toward the Contract Goals.

3. Contractor may count toward its Contract Goals only those MWSBE Subcontractors/ Suppliers performing a Commercially Usefully Function.

a. **COMMERCIALLY USEFUL FUNCTION** means a discrete task or group of tasks, the responsibility for performance of which shall be discharged by the MWSBE firm by using its own forces or by actively supervising on-site the execution of the tasks by another entity for whose work the MWSBE firm is responsible. In determining whether a certified firm is performing a commercially useful function, factors including but not limited to the following shall be considered: (1) whether the firm has the skill and expertise to perform the work for which it is being utilized and possesses all necessary licenses; (2) whether the firm is in the business of performing, managing, or supervising the work for which it has been certified and is being utilized; and

(3) whether it is performing a real and actual service that is a distinct and verifiable element of the work called for in a contract. Without limiting the generality of the foregoing, a MWSBE will not be considered to be performing a commercially useful function, if it subcontracts to non-MWSBE firms or to other MWSBE firms, more than 50 percent of a contract being counted toward the applicable Contract Goals, unless such subcontracting in excess of 50 percent has been expressly approved by the OBO Director in a Goal or Plan Deviation Request (Document 00472 or Document 00572) (either pre-bid or post award).

b. The OBO Director shall approve a Plan Deviation Request if the Contractor demonstrates that the industry standard for the type of work involved is to subcontract over 50 percent of the work.

4. A MWSBE firm cannot subcontract more than 50 percent of the work for which it is responsible to perform unless the OBO Director grants a Deviation Approval.

5. The Contractor may count 100 percent of MWSBE Manufacturer Supplier's participation and 60 percent of MWSBE Non-Manufacturer Supplier's participation toward its Contract Goals. Such MWSBE Supplier contracts shall not exceed 50 percent of contract's goals.

6. The OBO Policy and Procedures Manual, as amended, shall apply to the Contract for other determinations regarding counting MWSBE participation not explicitly provided for in the Contract.

H. CONTRACTOR COMPLIANCE

To ensure compliance with MWSBE requirements, the OBO Director and Contracting Department will monitor Contractor's efforts regarding MWSBE Subcontractors/Suppliers during the performance of this Contract. This may be accomplished through the following: job site visits, reviewing of records and reports, and interviews of randomly selected personnel.

I. RECORDS AND REPORTS

1. In accordance with II.A of this Document, the Contractor shall submit an initial report outlining MWSBE participation, 40 days after the Notice to Proceed date, and on or before the 15th day of each month thereafter until all MWSBE subcontracting or material supply activity is completed. Each report shall cover the preceding month's activity. The Contractor shall use the MWSBE Contract Compliance and Monitoring System (B2G Now) to meet this requirement.

2. Contractor shall maintain the following records for review upon request by the OBO Director or Contracting Department:

   a. Copies of executed Subcontractor agreements and purchase orders;
   b. Documentation of payments and other transactions with MWSBE Subcontractors/ Suppliers;
   c. Appropriate explanations of any changes or replacements of MWSBE Subcontractors/Suppliers;

NOTE: All replacement MWSBE Subcontractors/Suppliers must be certified by the Office of Business Opportunity.

   d. Any other records required by the OBO Director or Contracting Department.

3. If a Participation Plan Percentage is not being met, the monthly report shall include a narrative description of the progress being made in MWSBE participation. If sufficient MWSBE Subcontractors or Suppliers to meet the Participation Plan Percentage are being utilized, they should be identified by name and the dollar amount paid to date for work performed or materials furnished by each MWSBE during the monthly period. Reports are required when no activity has occurred in a monthly period.

4. Contractor shall retain all such records for a period of four years following completion of the Work and shall be available at reasonable times and places for inspection by authorized representatives of the City including the City Controller.

IV. SANCTIONS:

A. SUSPENSION PERIOD AND WAIVER

Pursuant to Section 15-86 of the Code of Ordinances, the OBO Director is authorized to suspend for a period of up to, but not to exceed, five years, any Contractor who has failed to make Good Faith Efforts.

The hearing officer(s) shall not have participated in the actions or investigations giving rise to the suspension hearing.

D. NOTICE

1. Prior to imposing any suspension, the OBO Director shall deliver written notice to the Contractor or MWSBE setting forth the grounds for the proposed suspension and setting a date, time, and place to appear before the hearing officer(s) for a hearing on the matter.

2. Any notice required or permitted to be given hereunder to any Contractor or MWSBE may be given either by personal delivery or by certified United States mail, postage prepaid, return receipt requested, addressed to their most recent address as specified in the records of the Office of Business Opportunity or in the Contract if no address is on file with the Office of Business Opportunity.

E. HEARING PROCEDURES

Proceedings before a hearing officer shall be conducted informally and in accordance with the OBO Policy and Procedures Manual, as amended, provided that each party may be represented by counsel and may present evidence and cross-examine witnesses. The City shall have the burden to prove by a preponderance of evidence that the Contractor's or MWSBE firm's actions constitute misconduct or failure to make Good Faith Efforts. The decision shall be reduced to writing and notice provided to the Contractor or MWSBE.

F. APPEALS

Appeals authorized pursuant to Section 15-86(b) of the Code of Ordinances shall be conducted by the OBO Director. Pursuant to Section 15-86(b), The contractor may appeal the OBO Director's decision in accordance with Section 15-23 of the Code of Ordinances and OBO Policy and Procedures.

ATTACHMENT A

City of Houston
Office of Business Opportunity
Good Faith Efforts Policy

General Policy.

Good Faith Efforts are steps taken to achieve an Contract Goal or other requirements which, by their scope, intensity and usefulness demonstrates the bidder's responsiveness to fulfill the business opportunity objective prior to the award of a contract, as well as the contractor's responsibility to put forth measures to meet or exceed the Contract Goal throughout the duration of the contract.

Good Faith Efforts are required to be made and demonstrated by an apparent successful bidder on goal oriented contracts or proposer on a regulated contract prior to award of a contract. Good Faith Efforts are required on professional services and construction contracts and on procurement of goods and non-professional service contracts with goals. If a bidder, when submitting a participation plan at the time of bid or proposal submission, anticipates it cannot or will not meet the Contract Goal prior to the award, the bidder must demonstrate to Office of Business Opportunity ("OBO") it has made Good Faith Efforts to meet the Contract Goal, to be eligible for the contract award.

Good Faith Efforts shall be evaluated on a case-by-case basis in making a determination whether a bidder or contractor is in compliance with this policy. The efforts employed by a bidder or contractor should be those that one could reasonably expect a bidder or contractor to take if the bidder were actively and aggressively attempting to obtain MWSBE participation sufficient to meet the Contract Goal. Efforts taken that are mere formalities or other perfunctory acts shall not be considered Good Faith Efforts to meet Contract Goals.

The factors provided herein are representative of the types of actions OBO will consider in determining whether the bidder or contractor made Good Faith Efforts to obtain MWSBE participation to meet the Contract Goal. The factors prescribed below are not intended to be a mandatory checklist, nor is it intended to be exhaustive or exclusive. OBO may consider other factors or types of efforts that may be relevant in appropriate cases.

If a contractor fails to submit Good Faith Efforts documentation as provided in this Policy, it waives the right to appeal OBO decisions related to this Policy. OBO will review all the efforts made by the contractor, including the quality and quantity of those efforts.

Pre–Award.

A bidder must submit a participation plan (Document 00470) to OBO at the time the bidder submits the bid. If the participation by certified MWSBE subcontractors documented on the participation plan ("participation") is less than the Contract Goal, a bidder should submit a Record of Good Faith Efforts (Document 00471) with the bid. A bidder should also submit a request for a deviation (Document 00472) if the bidder, having used Good Faith Efforts, reasonably believes that it cannot meet the Contract Goal or a commercially useful deviation.

In making a determination that the bidder has made a good faith effort to meet the Contract Goals, OBO shall consider specific documentation concerning the steps taken to obtain MWSBE participation, with a consideration of, by way of illustration and not limitation, whether the bidder demonstrated a genuine effort to comply with the following factors:

1. Attended any pre-bid or pre-proposal meetings scheduled by the City Department;

2. Followed up with MWSBEs that attended the pre-bid or pre-proposal meetings to discuss subcontracting and supplier opportunities and contacted MWSBEs listed in the City's online directory;

3. Conducted outreach with minority and women focused organizations and associations far in advance of solicitation due date (no less than 10 business days);

4. Identified and designated portions of the work to be performed by MWSBEs to increase the likelihood of meeting the Contract Goals (including where appropriate breaking down the contract into reasonably sized subcontracts to ensure participation);

5. Advertised subcontracting opportunities in news media focused towards minority and women persons far in advance of solicitation due date;

6. Provided MWSBEs with a point of contact that was knowledgeable about the project and possessed decision-making authority to answer questions from interested MWSBEs;

7. Provided a reasonable number of MWSBEs certified with timely written notices via email, mail, and/or fax and/or with documented contact regarding the subcontracting/supplier opportunities. A "reasonable number of MWSBEs" shall be based on the number of MWSBEs available in the directory;

8. Solicited the MWSBEs within a reasonable amount of time (no less than seven business days) before bid submission, as well as followed up with the MWSBEs solicited to determine if they were interested in submitting a bid or proposal or participating on a team.

9. Provided interested MWSBEs certified to perform the solicited work with prompt access to the plans, specifications, scope of work and requirements of the contract;

10. Negotiated in good faith with interested MWSBEs, and not rejecting MWSBEs as unqualified without sound reasons based on a thorough investigation of their capabilities;

11. Entered into a formal contract, or signing enforceable letters of intent with MWSBEs;

12. Provided an explanation to any MWSBE whose bid or price quotation is rejected, unless another MWSBE is accepted for the same work, as follows:
    a. Where price competitiveness is not the reason for rejection, a written rejection notice including the reason for rejection will be sent to the rejected MWSBE firm;
    b. Where price competitiveness is the reason for rejection, a meeting must be held with the price-rejected MWSBE, if requested, to discuss the rejection;

13. Made efforts to assist interested MWSBEs in obtaining bonding, lines of credit, insurance required for the contract, and documenting MWSBE denied by bona fide surety agents;

14. Ensured that the conditions and requirements for subcontracts are commensurate with industry standards and would not cause an economic hardship on MWSBEs, such as unnecessary insurance or coupling bid bonds with retainage;

15. Incorporated efforts not attempted earlier or on previous bids that appear more likely to lead to attaining the Contract Goal. Past performance on similar contracts with similar scopes will also be taken in consideration when determining Good Faith Efforts. A bidder that continues to make same efforts without any significant change in the level of participation may not be making Good Faith Efforts.

ost–Award.

The contractor must sign the approved participation plan (Document 00470 or Document 00570) prior to starting work on the Project. A contractor should submit a request for deviation (Document 00572) from OBO if the contractor, having made Good Faith Efforts, reasonably believes that it will not achieve the Participation Plan Percentage documented in the approved participation plan. Unless OBO approves a deviation, a contractor must submit to OBO a Participation Summary (Document 00660) prior to City Council's consideration of any close-out, term extension, or change order. If participation is less than anticipated in the approved participation plan, the contractor must submit a Record of Good Faith Efforts (Document 00571) along with the Participation Summary. A contractor that fails to submit a deviation request and Good Faith Efforts documentation waives the right to appeal OBO decisions related to this Policy.

If the contractor is awarded the contract and fails to achieve the established Participation Plan Percentage, the contractor must demonstrate to OBO its efforts to meet the Participation Plan Percentage and failure to do so based on circumstances that the contractor could not reasonably control. In determining whether the contractor made Good Faith Efforts to ensure full participation and achievement of the Participation Plan Percentage, OBO shall consider the following factors:

1. Whether the contractor designated an MWSBE liaison officer to administer the Contractor's MWSBE programs and to be responsible for maintenance of records of Good Faith Efforts.

2. Whether the contractor furnished prompt MWSBE Utilization Reports in a timely and accurate manner through the online Contract Monitoring System or via hard copy.

3. Whether the contractor responded to efforts to resolve disputes with MWSBEs, and genuinely attempted to resolve these issues.

4. Whether the contractor disclosed payment discrepancies timely and within the monthly reporting period;

5. Whether the contractor complied with the participation plan, unless the contractor received a deviation from the OBO Director and whether upon approval, the contractor made Good Faith Efforts to replace a removed MWSBE with another certified firm;

6. Whether the contractor furnished prompt written responses to written inquiries from the Director or any employee of OBO regarding the MWSBE's performance or information germane to the MWSBE's certification;

7. Whether the contractor ensured that at all times during the performance of any contract or subcontract the MWSBE firm is engaging in a commercially useful function as that term is defined in Chapter 15 of the City of Houston Code of Ordinances;

8. Whether the contractor provided the OBO information, or other material, that was factually accurate and free of material misrepresentation; and

9. Whether the contractor furnished prompt responses to requests for information, books and records needed to verify compliance from the department administering the Contract, the City Attorney and the City Controller;

10. Whether the contractor attended all meetings and mediation hearings as requested by the Director or his/her designee; and

11. How the contractor may be affected by change orders, with consideration given to the size of the change orders.

Change Orders.

The requirement to make Good Faith Efforts to achieve the approved Participation Plan Percentage is applicable to change orders. Contractors should make Good Faith Efforts to ensure that the Participation Plan Percentage remains substantially the same after the issuance of change orders. If a contractor cannot maintain substantially the same level of participation provided in the latest approved Participation Plan (Document 00470 or Document 00570) due to a change order, the contractor shall submit to the OBO Director and Contracting Department a Document 00571 (Post-Award Record of Good Faith Efforts) and Document 00572 (Post-Award Plan Deviation Request) in a timely manner that does not cause disruption to the project. In addition to other relevant factors, in evaluating whether Good Faith Efforts were made by the contractor to meet the Participation Plan Percentage despite change orders, the OBO Director shall consider the contractor's efforts to timely and efficiently deliver the project.

END OF DOCUMENT

Document 00820

WAGE SCALE AND PAYROLL REQUIREMENTS FOR ENGINEERING CONSTRUCTION

Wage Scale Requirements

1.1 Contractor and its Subcontractors must pay the general prevailing wage rates for building construction for each craft or type of worker or mechanic employed in the execution of any building construction or repair under the Contract in accordance with Chapter 2258 of the Texas Government Code and City of Houston, Texas Ordinance Nos. 85-2070, 2000-1114, 2001-152, 2006-91 and 2006-168, and 2009- 247 all as amended from time to time. City Council has determined the prevailing wage rate in the locality in which the work is being performed, which is set forth in Exhibit "A".

1.2 This prevailing wage rate does not prohibit the payment of more than the rates stated.

1.3 In bidding, Contractor warrants and represents that it has carefully examined the classifications for each craft or type of worker needed to execute the Contract and determined that such classifications in Exhibit "A" include all necessary categories to perform the work under the Contract.

1.4 The wage scale for engineering construction is to be applied to all site work greater than five feet from an exterior wall of new building under construction or from an exterior wall of an existing building.

1.5 If Contractor believes that an additional classification for a particular craft or type of worker is necessary to perform work under the Contract, it must submit with its bid a request to the Contract Compliance Division of the Office Of Business Opportunity ("OBO") to use an additional labor classification not listed in Exhibit "A" and specify the proposed new classification. OBO shall determine whether a proposed classification is already covered in Exhibit "A", and, if it is, specify which classification is appropriate. OBO's decision is conclusive. If OBO decides that a new classification is necessary, it will determine the appropriate prevailing wage rate for any resurveyed, amended, new, or additional craft or type of worker not covered by Exhibit "A". Such determination must be decided in accordance with procedures established by OBO, and in compliance with Chapter 2258 of the Texas Government Code and City of Houston, Texas Ordinance Nos. 85-2070, 2000-1114, 2001-152, 2006-91, 2006-168 and 2009-247 subject to City Council approval.

1.6 Contractor must not use any labor classification not covered by Exhibit "A" until such classification is established and approved for use by OBO.

1.7 A Contractor or Subcontractor who violates Chapter 2258 of the Texas Government Code must pay to the City, $60 per each worker employed for each calendar day or part of the day that the worker is paid less than the wage rates set forth in Exhibit "A".

1.8 The City may withhold money required to be withheld under Chapter 2258 of the Texas Government Code from the final payment to Contractor or earlier payments if City Council makes a determination that there is good cause to believe that Contractor has not complied with these provisions and Chapter 2258 of the Government Code, in which case the City may withhold the money at any time subsequent to the finding by City Council.

1.9 Contractor and Subcontractors must keep records specifying:

(1) the name and classification of each worker employed under the Contract; and

(2) the actual per diem wages paid to each worker, and the applicable hourly rate.

The records must be open at all reasonable hours for inspection by the officers and agents of the City.

1.10 The hourly cost of salary for non-exempt workers for labor in excess of 40 hours per worker per week, shall be calculated at 1.5 times the worker's base pay, plus 1.0 times fringe benefits, for the applicable craft and level.

Certified Payroll Requirements

2.1 Employees are paid weekly and payrolls are submitted weekly using the City of Houston's electronic payroll submission module, unless the prime Contractor has been instructed to do otherwise by the Office of Business Opportunity. When no work is done after a Contractor has started work, the Contractor is required to submit a weekly compliance statement indicating no work was performed. The payrolls must reflect the exact work and classification of the workers, the exact amount that they were paid. Workers must be paid the contracted amount (prevailing wage rates). The Contractor will be penalized $60.00 a day for each employee who is underpaid per Texas Government Code §2258-023 for all contracts.

2.2 Payrolls must be submitted electronically & indicate whether the worker worked inside or outside the building area when both wage rates are applicable to the contract.

2.3 Payrolls must be submitted each week until all work by the contractor is complete and the electronic payroll submission is marked as final in the system.

2.4 Payrolls must cover a seven day period from the start of the work week and must be consecutive seven day periods until all work is complete.

2.5 Payrolls must have employees' names, addresses, last four digits of the social security numbers, and job classifications. The job classifications must be the same as the classifications on the prevailing wage rate schedule.

2.6 A payroll deduction authorization form must be submitted for each employee for any deductions other than Federal and FICA taxes.

2.7 Employees must be paid overtime (time and a half) for all hours worked over 40 hours a week on both federally and City-funded contracts.

2.8 The Contractor has the responsibility to comply with all Internal Revenue Service rules and regulations. Contractors who submit certified payrolls with **Owner Operators (truckers)** must submit a signed tax liability statement from Owner Operator acknowledging their responsibility for Federal Income Tax and FICA reporting obligations.

2.9 If the Contractor wants to use the apprentice wage rates for an employee, the apprenticeship certificates must be submitted to the Office of Business Opportunity in advance of the employee working on the project and appearing on the payroll. You must comply with the listed number of journeymen to apprentices as listed.

2.10 A poster of the Prevailing Wage Rate Schedule should be clearly displayed on each job site from the time the project starts until the work is completed, or in case of annual service agreements, in the Contractor's office.

2.11 The Contractor shall submit the "Certificate from Contractor Appointing Officer or Employee to Supervise Payment of Employees" (Exhibit "B") to the Monitoring Authority listed in Document 00495 prior to final execution of the contract.

2.12 During the course of the work, ALL Subcontractors shall submit the "Certificate from Subcontractor Appointing Officer or Employee to Supervise Payment of Employees" (Exhibit "C") to the Monitoring Authority listed in Document 00495.

2.13 Upon completion of the Project, as part of the contract-awarding department's total clearance process, the Office of Business Opportunity's Contract Compliance Section must review whether the Wage Rate and Payroll Requirements were met and report the results to the department.

REST OF PAGE INTENTIONALLY LEFT BLANK

EXHIBIT "A"

LABOR CLASSIFICATIONS AND PREVAILING WAGE RATES FOR ENGINEERING CONSTRUCTION 2015

CLASSIFICATION	RATE	CLASSIFICATION	RATE
Asphalt Distributor Operator	$14.06	Milling Machine Operator - Fine Grade	$13.53
Asphalt Paving Machine Operator	$14.32	Mixer Operator	$10.33
Asphalt Raker	$12.36	Motor Grader Operator- Rough	$14.23
Asphalt. Shoveler	$11.68	Motor Grader Operator	$15.69
Broom or Sweeper Operator	$12.68	Oiler	$12.12
Bulldozer Operator	$11.81	Painter-Structures	$18.62
Carpenter- Rough	$12.49	Pavement Marking Machine Operator	$11.18
Concrete Finisher- Paving	$12.98	Pile Driverman	$14.95
Concrete Finisher- Structures	$12.98	Pipe Layer	$12.12
Concrete Paving Curbing Machine Operator	$11.71	Reinforcing Steel Setter - Paving	$15.15
Concrete Paving Finishing Machine Operator	$13.07	Reinforcing Steel Setter - Structure	$14.39
Concrete Paving Joint Sealer Operator	$11.00	Roller Operator, Pneumatic - Self-propelled	$11.57
Concrete Paving. Saw Operator	$13.99	Roller Operator, Steel Wheel, Flat Wheel/Tamping	$11.57
Concrete Paving Spreader Operator.	$10.44	Roller Operator, Steel Wheel, Plant Mix Pavement	$11.92
Concrete Rubber . . .	$9.00	Scraper Operator	$13.47
Crane Clamshell Backhoe Derrick, Dragline, Shovel Operator	$12.71	Servicer	$13.97
Crusher and Screening Plant Operator	$11.29	Sign Installer - PGM	$8.54
Electrician * 3 Journeyman 2 Apprentice Allowed	$27.11	Slip Form Machine Operator	$11.07
Flagger	$10.33	Spreader Box Operator	$13.58
Form Builder/Setter- Structures	$12.23	Structural Steel Worker	$14.39
Form Liner- Paving and Curb	$12.34	Tractor Operator - Crawler Type	$13.68
Form Setter- Paving and Curb	$12.34	Tractor Operator- Pneumatic	$10.07
Foundation Drill Operator - Crawler Mounted	$17.43	Transit Mixer Truck Driver	$11.00
Foundation Drill Operator - Truck Mounted	$15.89	Truck Driver, Lowboy-float	$16.03
Front Loader Operator	$13.17	Truck Driver, Single-Axle - Heavy	$11.46
Laborer Common	$11.02	Truck Driver, Single-Axle - Light	$11.48
Laborer- Utility	$11.73	Truck Driver, Tandem Axle Semi-Trailer	$12.27
Manhole Builder	$9.00	Work Zone Barricade Servicer	$11.67
Mechanic	$16.96	eceive rate prescribed for craft performing operation to which welding is incidental	
* Apprentices- must be in an approved USDOL Program and cannot exceed ratios			

Engineering Prevailing Wages Classification Definitions

Asphalt Distributor Operator
Drives distributor truck, sets spray bars and operates valves and levers to control distribution of bituminous material for highway surfacing. May oil, grease or otherwise service and make adjustments to equipment as needed. Performs other related duties.

Asphalt Paving Machine Operator
Operates paving machine that spreads and levels asphaltic concrete on highway subgrade. Controls movement of machine, raises and lowers screed, regulates width of screed. May, oil, grease, service and make adjustments to equipment as needed. Performs other related duties.

Asphalt Raker
Distributes asphaltic materials evenly over road surface by raking and brushing material to correct thickness; directs Laborers when to add or take away material to fill low spots or to reduce high spots. Performs other related duties.

Asphalt Shoveler
A general term used on construction work covering many unskilled classifications requiring work of a physical nature. A laborer works with all crews doing everything from pick and shovel work to cleaning up lumber with hammer, shoveling and placing concrete, uses air tools, cleans concrete joints and fills joints with sealing compound from bucket or with hose and nozzle from a central source, applies coating of oil to inside face of forms, may help set and strip forms, unloads and transports reinforcing steel, cures newly poured concrete, helps lower pipe into ditch for pipelayers, builds fences, works with dirt crew keeping construction layout stakes out of the way of dirt moving equipment.

Broom or Sweeper Operator
Operates a self-propelled machine to sweep and clean roadway surfaces. May oil grease, service and make adjustments to equipment as needed. Performs other related duties.

Bulldozer Operator
Operates a crawler tractor with a bulldozer mounted in front of chassis to level, distribute and push earth or other material. May operate a ripper attachment to break up rock or other hard material. May use a push block on front of tractor to push load scrapers. May oil, grease, or otherwise service and make minor repairs to equipment as needed. Performs other related duties.

Carpenter, Rough
Works from plans to build, assemble, fit together, align, plum, and set in place forms for molding concrete structures. Forms may be wood, steel, aluminum, fiberglass or any other type of material. Checks form while concrete is placed. May install miscellaneous materials integral to concrete structures. May set precast concrete elements. Prepares for slipforming traffic rail and median barrier. May install permanent metal deck forms. May work with power tools Performs other related duties.

Concrete Finisher, Paving
Finishes the exposed surfaces of fresh concrete paving, median barrier and every element of concrete structures to the final grade and contour structures to the final grade and contour with the use of straight edges and steel trowels. Operates bridge deck finishing machine. Finishes concrete curbs and gutters. Finishes exposed surface of concrete after forms have been removed by patching imperfections with fresh concrete, rubbing surface with abrasive stone, and directing others in removing excess or defective concrete with power tools. Performs other related duties.

Concrete Finisher, Structures
A worker semi-skilled in concrete finishing who assists Concrete finisher by performing specific or general duties of lesser skill and keeping Concrete Finisher supplied with materials, tools, and supplies; cleaning working area an equipment; and holding materials and tools. Performs other related duties.

Concrete Paving Curbing Machine Operator
Operates self - propelled machine(s) which may or may not travel on concrete paving forms, spreading and leveling fresh concrete to grade by use of augers and screeds. May oil, grease or otherwise service and make adjustments to equipment as necessary. Performs other related duties.

Concrete Paving Finishing Machine Operator
Operates self - propelled machine(s) which may or may not travel on concrete paving forms, spreading and leveling fresh

concrete to grade by use of augers and screeds. May oil, grease or otherwise service and make adjustments to equipment as necessary. Performs other related duties.

Concrete Paving Joint Sealer Operator
Cleans and seals joints requiring a hot or cold sealing compound in concrete paving, sidewalks, driveway and approach slabs. May oil, grease or make necessary repairs adjustments to equipment as needed. Performs other related duties.

Concrete Paving Saw Operator
Operates a water-cooled power saw with either or an abrasive blade to saw expansion and contraction joints in concrete paving. May also be used to saw asphaltic pavements. May oil grease or otherwise service and make necessary adjustments to equipment as needed. Performs other related duties.

Concrete Paving Spreader Operator
Operates self - propelled machine(s) which may or may not travel on concrete paving forms, spreading and leveling fresh concrete to grade by use of augers and screeds. May oil, grease or otherwise service and make adjustments to equipment as necessary. Performs other related duties.

Concrete Rubber
Finishes the exposed surface of concrete masonry after the forms have been removed by patching holes and broken corners with fresh concrete, rubbing surface with abrasive stone to remove rough spots, and removing high spots and defective concrete with hand chisel and hammer or pneumatic chisel and powered abrasive stone. Performs other related duties.

Crane, Clamshell, Backhoe, Derrick, Dragline, Shovel Operator
A worker who operates a lattice boom type crane can hoist and move materials, raise and lower heavy weights and perform other related operations. May be crawler type or rubber tired. May include placement of rock riprap, clamshell, dragline, pipe and pile driving operations. May oil, grease or otherwise service and make necessary adjustments to equipment as needed. Performs other related duties.

Crusher and Screed Plant Operator
Operates a crusher or screening plant through which rock is run to break it into crushed stone for construction or to control flow of materials not needed. May include minor repairs and may service and make necessary adjustments to equipment as needed. Performs other related duties.

Electrician *3 Journeyman 2 Apprentice
Plans and directs the layout of metal electrical conduit, installs wiring systems, switch-panels, buss bars, works on overhead distribution systems and underground distribution systems. Performs other related duties.

Flagger
A worker who directs traffic in or around a construction site. May use signs or devices to direct traffic. May help assemble, position and clean devices or equipment used to direct traffic. Must be able to effectively communicate with the public. May require certain level of training by TXDOT specifications. Performs other related duties.

Form Builder/Setter, Structures
Fits together, aligns and sets to grade metal and wooden forms for placement of concrete. Forms may be wood, steel, aluminum, fiberglass or any other type of material. Checks forms while concrete is placed. May install miscellaneous materials integral to concrete structures. May set precast concrete elements. Prepares for slipforming traffic rail and median barrier. May install permanent metal deck forms. May work with power tools. Performs other related duties.

Form Liner, Paving & Curb
Fits together, panels align and sets to grade metal and wooden forms for placement of concrete. Works with survey crew to set stringline for panels or moles. Performs other related duties.

Form Setter, Paving & Curb
Fits together, align and set to grade metal and wooden forms for placement of concrete paving and curbs. Works with survey crew to set stringline for paving, curb and gutter curb. Performs other related duties.

Foundation Drill Operator, Crawler Mounted
Operates a hole-drilling machine that is crawler mounted. May include geotechnical operations such as soils nails, rock nails, tiebacks, anchors and jet grouting. May oil, grease or otherwise service and make necessary adjustments to equipment as needed. Performs other related duties.

Foundation Drill Operator, Truck Mounted
Operates a hole drilling machine that is mounted on the rear of a rubber tired vehicle or truck. May include soils nails, rock nails, tiebacks, anchors and jet grouting. Drive truck from location to location or may have laborer who drives truck. May oil, grease or otherwise service and make necessary adjustments to equipment as needed. Performs other related duties.

Front End Loader Operator
Operates a rubber tired, skid steer or crawler type tractor with an attached scoop type bucket on front end. Machine is used to load materials from stockpiles, excavation, charging batch plants, loading and unloading trucks. May be used with attachments in lieu of the bucket. May oil, grease or otherwise service and make necessary adjustments to equipment as needed. Performs other related duties.

Laborer, Common
A general term used on construction work covering many unskilled classifications requiring work of a physical nature. A laborer works with all crews doing everything from pick and shovel work to cleaning up lumber with hammer, shoveling and placing concrete, uses air tools, cleans concrete joints and fills joints with sealing compound from bucket or with hose and nozzle from a central source, applies coating of oil to inside face of forms, may help set and strip forms, unloads and transports reinforcing steel, cures newly poured concrete, helps lower pipe into ditch for pipelayers, builds fences, works with dirt crew keeping construction layout stakes out of the way of dirt moving equipment.

Laborer, Utility
Performs a variety of manual duties, usually working in a utility capacity by working on multiple projects and tasks where demands require workmen with varied experience and ability to work without close direction. Unloads and transports reinforcing steel. May occasionally place and tie reinforcing steel. Directs common laborers in pouring concrete. Erects shoring and bracing. Assists in installation of pipe. Installs, operate and maintains dewatering systems. May assist equipment operators in positioning machines, verifying grades and signaling operators. Directs truck drivers and scraper operators to dumping positions to maintain grades as directed. Uses power tools and air tools. May work as lead man in a labor crew. His performance of a wide variety of construction jobs distinguishes him from a helper assigned to a specific craft. Installs and maintains erosion control. Is more or less a general utility construction worker. May be second step in learning a skill, and may later become a helper in a specific classification. Performs other related duties.

Manhole Builder
Constructs a means of permanent access to water and sewer lines for maintenance purposes. This work consists of laying brick or concrete slab at bottom of ditch up to an approximate grade line near the surface of the ground. Brick or block is normally laid to form a nearly circular manhole. Brick or block is laid in by eyesight and is normally to a plumb line. Chipped or culled brick can be used quite often is. No effort may be made to keep mortar off the face of the brick and joints are not pointed. May apply coating of concrete to interior and exterior surface. Performs other related duties.

Mechanic
Assembles, set up, adjusts and maintains and repairs all types of construction equipment and trucks. He may perform the duties of a welder in repair of equipment. Performs other related duties.

Milling Machine Operator, Fine Grade
Operates a power-driven milling machine that planes material of the to roadbed and discharges the material into a hauling unit or a windrow. May oil, grease or otherwise service and make necessary adjustments to equipment as needed. Performs other related duties.

Mixer Operator
Performs a variety of manual duties, usually working in a utility capacity by working on multiple projects and tasks where demands require workmen with varied experience and ability to work without close direction. Unloads and transports reinforcing steel. May occasionally place and tie reinforcing steel. Directs common laborers in pouring concrete. Erects shoring and bracing. Assists in installation of pipe. Installs, operate and maintains dewatering systems. May assist equipment operators in positioning machines, verifying grades and signaling operators. Directs truck drivers and scraper operators to dumping positions to maintain grades as directed. Uses power tools and air tools. May work as lead man in a labor crew. His performance of a wide variety of construction jobs distinguishes him from a helper assigned to a specific craft. Installs and maintains erosion control. Is more or less a general utility construction worker. May be second step in learning a skill, and may later become a helper in a specific classification. Performs other related duties.

Motor Grader Operator, Rough
Operates a motor grader. Equipment is used to grade excavation and embankment and to lay asphalt, base and other materials. May blade haul roads and do other general motor grader work, but does not perform finish grade work to close

specification tolerances. This operator may be a learner in the first phase of learning the skills of motor grader work. May oil, grease or otherwise service and make necessary adjustments to equipment as needed. Performs other related duties.

Motor Grader Operator
Operates a motor grader. Equipment is used to grade excavation and embankment and to lay asphalt, base and other materials. May blade haul roads and do other general motor grader work, but does not perform finish grade work to close specification tolerances. This operator may be a learner in the first phase of learning the skills of motor grader work. May oil, grease or otherwise service and make necessary adjustments to equipment as needed. Performs other related duties.

Oiler
A learner or semi-skilled worker who under the direction of the watch engineer. May oil and grease or otherwise service all engines and necessary equipment as needed. He may clean and paint engine room as needed. Performs other related duties.

Painter, Structures
Paints and stains structural steel and concrete surfaces of bridges, retaining walls, or other structures. Directs cleaning and abrasive blasting of surfaces prior to painting or staining. Performs other related duties.

Pavement Marking Machine Operator
Operates machine used in laying paint stripes or markers on all types of paving. Loads machine with appropriate materials and may walk or ride on machine. May oil, grease or otherwise service and make necessary adjustments to equipment as needed. Performs other related duties.

Piledriverman
Sets in place, aligns, plumbs directs driving of timber, concrete, steel, pipe and any other type of piling. Sets, drives and pulls steel, concrete and other types of sheet piling. Rigs pile and leads and bracing. Signals operator. Splices piles before and after driving. Directs pile cutoff. May direct jetting or drilling equipment in connection with installing piles to grade. Performs other related duties.

Pipelayer
Installs concrete, clay, steel, ductile iron, plastic, corrugated pipe and any other type of pipe for storm drainage, water lines, gas lines and sanitary sewer lines. Lays underground communication and electrical ducts. May install and set electrical ground boxes, hand holes, manholes, inlets and other structures. Caulks joints, makes threaded and flanged connections. Installs valves and other accessories. Performs other related duties.

Reinforcing Steel Setter, Paving
Works from plans to lay out and install reinforcing steel within forms or in mats of concrete paving. May direct unloading of material. Determines rigging required to complete work. Gives direction to reinforcing steel worker (helper) or common or utility laborers. May install miscellaneous materials integral to concrete structure or paving. May work with power tools. Performs other related duties.

Reinforcing Steel Setter, Structure
Works from plans to lay out and install reinforcing steel within forms or in mats of concrete paving. May direct unloading of material. Determines rigging required to complete work. Gives direction to reinforcing steel worker (helper) or common or utility laborers. May install miscellaneous materials integral to concrete structure or paving. May work with power tools. Performs other related duties.

Roller Operator, Pneumatic, Self-Propelled
Operates a self-propelled machine with either steel wheels pneumatic tires, which is used to compact and smooth all bituminous materials. May oil, grease or otherwise service and make necessary adjustments to equipment as needed. Performs other related duties.

Roller Operator, Steel Wheel, Flat Wheel/Tamping
Operates a self-propelled machine with either steel wheels or pneumatic tires which is used to compact earth fills, subgrade, flexible base and all other types of materials except bituminous. May oil, grease or otherwise service and make necessary adjustments to equipment as needed. Performs other related duties.

Roller Operator, Steel Wheel, Plant Mix Pavement
Operates a self-propelled machine with either steel wheels pneumatic tires, which is used to compact and smooth all bituminous materials. May oil, grease or otherwise service and make necessary adjustments to equipment as needed. Performs other related duties.

Scraper Operator
Operates a self-contained wheeled tractor scraper both self loading or assisted by crawler tractors or other scrapers. Used to excavate and transport earth or other materials. May oil, grease or otherwise service and make necessary adjustments to equipment as needed. Performs other related duties.

Servicer
Drives a truck, which carries various fuels, oils, greases and filters. Must have knowledge of and is responsible for the correct oiling and greasing and changing of filters on equipment according to the manufacturers' specifications. Uses compressed air grease guns, wrenches and other tools. May make adjustments to clutches, brakes and other mechanical items. Keeps record of service preventive maintenance records. May have laborer assisting him. May require CDL if driving truck on public highways. Performs other related duties.

Sign Installer (PGM)
Sets forms, reinforcing steel, anchor bolts and pours concrete for Sign foundations. Fabricates and erects pipe and angle Frameworks by bolting, welding or other means prior to installation of signs that are normally prefabricated. Works from plans in location and drilling holes for proper location and alignment of signs. May direct hoisting of signs into place. Fastens signs to framework by bolting and other means. Locates and sets lighting brackets. May perform other work associated with signing projects. Supervises sign erector helper. Performs other related duties.

Slip Form Machine Operator
Cleans and seals joints requiring a hot or cold sealing compound in concrete paving, sidewalks, driveway and approach slabs. May oil, grease or make necessary repairs adjustments to equipment as needed. Performs other related duties.

Spreader Box operator
Operates spreader box by adjusting hopper and strike off blade so that the gravel, stone or other material may be spread to a specific depth on road surface during seal coat and surface treatment operations. May oil, grease or otherwise service and make necessary adjustments to equipment as needed. Performs other related duties.

Structural Steel Worker
Works from plans to lay out and install reinforcing steel within forms or in mats of concrete paving. May direct unloading of material. Determines rigging required to complete work. Gives direction to reinforcing steel worker (helper) or common or utility laborers. May install miscellaneous materials integral to concrete structure or paving. May work with power tools. Performs other related duties.

Tractor operator, Crawler Type
Operates a crawler tractor with a bulldozer mounted in front of chassis to level, distribute and push earth or other material. May operate a ripper attachment to break up rock or other hard material. May use a push block on front of tractor to push load scrapers. May oil, grease, or otherwise service and make minor repairs to equipment as needed. Performs other related duties.

Tractor Operator, Pneumatic
Operates a gasoline or diesel powered agricultural tractor that tows compaction rollers, plow, disc. water tanks, scrapers and other similar operations. May use other miscellaneous attachments. May oil, grease or otherwise service and make necessary adjustments to equipment as needed. Performs other related duties.

Traveling Mixer Operator
Drives a gasoline or diesel truck upon which is mounted a concrete mixer. Operates concrete mixer and dumps concrete on the grade, into forms or into concrete pumps or buckets. Cleans mixer drum. May require CDL license for on highway use. May service and make necessary adjustments for proper operation of equipment. Performs other related duties.

Truck driver, lowboy-Float
Drives a heavy-duty diesel powered truck to which is attached a trailer upon which heavy equipment is hauled. Driver is often required to operate heavy equipment to load or unload the lowboy. May require CDL license for on highway use. May service and make necessary adjustments for proper operation of equipment. Performs other related duties.

Truck driver, Single Axle, Heavy
Drive a light capacity truck for transporting loads of construction material. The truck is of single rear axle type, may have various kinds of beds attached, such as dump, flat bed, tank, etc. May require CDL license for driving on highway. May services and make necessary adjustments for proper operation equipment. Performs other related duties.

Truck driver, Single Axle-Light
Drive a light capacity truck for transporting loads of construction material. The truck is of single rear axle type, may have

various kinds of beds attached, such as dump, flat bed, tank, etc. May require CDL license for driving on highway. May services and make necessary adjustments for proper operation equipment. Performs other related duties.

Truck Driver, Tandem Axle, Semi-Trailer
Drives a diesel-powered tractor pulling a semi trailer hauling materials. Hauls dirt, rock, aggregates or other material. May require CDL license for driving on highway. May service and make necessary adjustments for proper operation of equipment. Performs other related duties.

Work Zone Barricade Servicer
Fabricates, erects and maintains temporary traffic control devices, including arrow boards, signs, barricades, channelizing devices, barrels and all message boards. May operates a truck during traffic control operations.

WELDERS - Receives rate for craft being performed to which welding is incidental.

EXHIBIT "B"

CERTIFICATE FROM CONTRACTOR APPOINTING OFFICER OR EMPLOYEE TO SUPERVISE PAYMENT OF EMPLOYEES

Project Name _____

_____

Project WBS#:_____Date_____

(I) (We) hereby certify that (I am) (we are) the **Prime Contractor** for _____

_____
(specify type of job)

in connection with construction of the above-mentioned Project, and that (I) (we) have appointed_____, whose signature appears below, to supervise the payment of (my) (our) employees beginning_____, 20___; that he/she is in a position to have full knowledge of the facts set forth in the payroll documents and in the statement of compliance required by the Copeland Act and the City of Houston, which he/she is to execute with (my) (our) full authority and approval until such time as (I) (we) submit to the City of Houston a new certificate appointing some other person for the purposes hereinabove stated.

_____ Phone:_____
(Identifying Signature of Appointee)

Attest: _____
(Name of Firm or Corporation)

By:_____ By:_____
(Signature) (Signature)

_____ _____
(Title) (Title)

NOTE: This certificate must be executed by an authorized officer of a corporation or by a member of a partnership, and shall be executed prior to and be submitted with the first payroll. Should the appointee be changed, a new certificate must accompany the first payroll for which the new appointee executes a statement of compliance required by the Copeland Act and the City of Houston.

EXHIBIT "C"

CERTIFICATE FROM SUBCONTRACTOR APPOINTING OFFICER OR EMPLOYEE TO SUPERVISE PAYMENT OF EMPLOYEES

Project Name _____

_____

Project WBS#:_____Date_____

(I) (We) hereby certify that (I am) (we are) the **Sub Contractor** for _____

_____
(specify type of job)

in connection with construction of the above-mentioned Project, and that (I) (we) have appointed_____, whose signature appears below, to supervise the payment of (my) (our) employees beginning_____, 20___; that he/she is in a position to have full knowledge of the facts set forth in the payroll documents and in the statement of compliance required by the Copeland Act and the City of Houston, which he/she is to execute with (my) (our) full authority and approval until such time as (I) (we) submit to the City of Houston a new certificate appointing some other person for the purposes hereinabove stated.

_____ Phone:_____
(Identifying Signature of Appointee)

Attest: _____
(Name of Firm or Corporation)

By:_____ By:_____
(Signature) (Signature)

_____ _____
(Title) (Title)

NOTE: This certificate must be executed by an authorized officer of a corporation or by a member of a partnership, and shall be executed prior to and be submitted with the first payroll. Should the appointee be changed, a new certificate must accompany the first payroll for which the new appointee executes a statement of compliance required by the Copeland Act and the City of Houston.

END OF DOCUMENT

Document 00821

WAGE SCALE AND PAYROLL REQUIREMENTS FOR BUILDING CONSTRUCTION

Wage Scale Requirements

1.1 Contractor and its Subcontractors must pay the general prevailing wage rates for building construction for each craft or type of worker or mechanic employed in the execution of any building construction or repair under the Contract in accordance with Chapter 2258 of the Texas Government Code and City of Houston, Texas Ordinance Nos. 85-2070, 2000-1114, 2001-152, 2006-91 and 2006-168, and 2009-247 all as amended from time to time. City Council has determined the prevailing wage rate in the locality in which the work is being performed, which is set forth in Exhibit "A".

1.2 This prevailing wage rate does not prohibit the payment of more than the rates stated.

1.3 In bidding, Contractor warrants and represents that it has carefully examined the classifications for each craft or type of worker needed to execute the Contract and determined that such classifications in Exhibit "A" include all necessary categories to perform the work under the Contract.

1.4 The wage scale for building construction is to be applied to work on a building including an area within 5 feet of the exterior wall.

1.5 If Contractor believes that an additional classification for a particular craft or type of worker is necessary to perform work under the Contract, it must submit with its bid a request to the Contract Compliance Division of the Office of Business Opportunity ("OBO") to use an additional labor classification not listed in Exhibit "A" and specify the proposed new classification. OBO shall determine whether a proposed classification is already covered in Exhibit "A", and, if it is, specify which classification is appropriate. OBO's decision is conclusive. If OBO decides that a new classification is necessary, it will determine the appropriate prevailing wage rate for any resurveyed, amended, new, or additional craft or type of worker not covered by Exhibit "A". Such determination must be decided in accordance with procedures established by OBO, and in compliance with Chapter 2258 of the Texas Government Code and City of Houston, Texas Ordinance Nos. 85-2070, 2000-1114, 2001-152, 2006-91, 2006-168, and 2009-247 subject to City Council approval.

1.6 Contractor must not use any labor classification not covered by Exhibit "A" until such classification is established and approved for use by OBO.

1.7 A Contractor or Subcontractor who violates Chapter 2258 of the Texas Government Code must pay to the City, $60 per each worker employed for each calendar day or part of the day that the worker is paid less than the wage rates set forth in Exhibit "A".

1.8 The City may withhold money required to be withheld under Chapter 2258 of the Texas Government Code from the final payment to Contractor or earlier payments if City Council makes a determination that there is good cause to believe that Contractor has not complied with these provisions and Chapter 2258 of the Government Code, in which case the City may withhold the money at any time subsequent to the finding by City Council.

1.9 Contractor and Subcontractors must keep records specifying:

(1) the name and classification of each worker employed under the Contract; and

(2) the actual per diem wages paid to each worker, and the applicable hourly rate.

The records must be open at all reasonable hours for inspection by the officers and agents of the City.

1.10 The hourly cost of salary for non-exempt workers for labor in excess of 40 hours per worker per week, shall be calculated at 1.5 times the worker's base pay, plus 1.0 times fringe benefits, for the applicable craft and level.

Certified Payroll Requirements

2.1 Employees are paid weekly and payrolls are submitted weekly using the City of Houston's electronic payroll submission module, unless the prime Contractor has been instructed to do otherwise by the Office of Business Opportunity. When no work is done after a Contractor has started work, the Contractor is required to submit a weekly compliance statement indicating no work was performed. The payrolls must reflect the exact work and classification of the workers, the exact amount that they were paid. Workers must be paid the contracted amount (prevailing wage rates). The Contractor will be penalized $60.00 a day for each employee who is underpaid per Texas Government Code §2258-023 for all contracts.

2.2 Payrolls must be submitted electronically & indicate whether the worker worked inside or outside the building area when both wage rates are applicable to the project.

2.3 Payrolls must be submitted each week until all work by the contractor is complete and the electronic payroll submission is marked as final in the system.

2.4 Payrolls must cover a seven day period from the start of the work week and must be consecutive seven day periods until all work is complete.

2.5 Payrolls must have employees' names, addresses, last four digits of the social security numbers, and job classifications. The job classifications must be the same as the classifications on the prevailing wage rate schedule.

2.6 A payroll deduction authorization form must be submitted for each employee for

any deductions other than Federal and FICA taxes and court ordered child support.

2.7 Employees must be paid overtime (time and a half) for all hours worked over 40 hours a week on both federally and City-funded contracts.

2.8 The Contractor has the responsibility to comply with all Internal Revenue Service rules and regulations. Contractors who submit certified payrolls with **Owner Operators (truckers)** must submit a signed tax liability statement from each Owner Operator acknowledging their responsibility for Federal Income Tax and FICA reporting obligations.

2.9 If the Contractor wants to use the apprentice wage rates for an employee, the apprenticeship certificates must be submitted to the Office of Business Opportunity in advance of the employee working on the project and appearing on the payroll. Contractor must comply with posted number of journeymen to apprentices or helpers as listed on the wage rate.

2.10 A poster of the Prevailing Wage Rate Schedule should be clearly displayed on each job site from the time the project starts until the work is completed, or in case of annual service agreements, in the Contractor's office.

2.11 The Contractor shall submit the "Certificate from Contractor Appointing Officer or Employee to Supervise Payment of Employees" (Exhibit "B") to the Monitoring Authority listed in Document 00495 prior to final execution of the contract.

2.12 During the course of the work, Subcontractors shall submit the "Certificate from Subcontractor Appointing Officer or Employee to Supervise Payment of Employees" (Exhibit "C") to the Monitoring Authority listed in Document 00495.

2.13 Upon completion of the Project, as part of the contract-awarding department's total clearance process, the Office of Business Opportunity's Contract Compliance Section must review whether the Wage Rate and Payroll Requirements were met and report the results to the department.

REST OF PAGE INTENTIONALLY LEFT BLANK

EXHIBIT "A"

CITY OF HOUSTON, TEXAS
LABOR CLASSIFICATIONS AND PREVAILING WAGE RATES
FOR BUILDING CONSTRUCTION 2015

Worker Classification	Ratio	Base Rate	Fringe Benefit	Wage Total
Asbestos Worker/Insulator *	Ratio 1/1 - Apprentice	$20.75	$9.85	$30.60
Asbestos Abatement Worker (ceilings, walls ,floors only)	Ratio 1/3 – Helpers $9.10	$14.00	$0.00	$14.00
Boilermaker *	Ratio 5/1 - Apprentice	$23.14	$21.55	$44.69
Brick Layer * (see Mason Tender Brick)	Ratio 1/3 – Mason Tender Brick	$18.87	$0.00	$18.87
Carpenter * (including acoustical ceiling work)	Ratio 2/1 - Apprentice	$21.97	$7.98	$29.95
Cement Mason/Concrete Finisher *	Ratio 1/3 Mason Tender	$13.93	$0.00	$13.93
Drywall Finisher/Taper *	Ratio 1/3 – Helpers $8.54	$16.27	$3.66	$19.93
Drywall Hanger, * incl. metal studs installation	Ratio 1/3 – Helpers $9.46	$17.44	$3.93	$21.37
Electrician *	Ratio 3/2 - Apprentice	$27.65	$7.70	$35.35
Elevator Mechanic *	Ratio 1/1 - Apprentice	$38.00	$26.79	$64.79
Formbuilder/ Formsetter *	Ratio 1/3 – Helpers $7.67	$12.77	$0.00	$12.77
Glazier *	Ratio 1/3 – Helper $11.51	$14.92	$2.78	$17.70
Insulator * (Batt and Foam)	Ratio 1/3 – Helper $6.50	$14.87	$0.73	$15.60
Ironworker *(Reinforcing)	Ratio 1/3 – Helper $7.83	$12.14	$0.00	$12.14
Ironworker *(Structural)	Ratio 1/3 – Helper $10.19	$22.02	$6.35	$28.37
Lather *	Ratio 1/3 – Helper $13.38	$19.73	$0.00	$19.73
Painter * (Brush, Roller, and Spray)	Ratio 1/3 – Helper $7.42	$17.24	$4.41	$21.65
Pipe Fitter *(**HVAC Pipe only**)	Ratio 1/1 - Apprentice	$29.63	$10.31	$39.94
Pipe Fitter *(**Excluding HVAC**)	Ratio 1/3 – Apprentice $12.40	$29.39	$10.31	$39.70
Plasterer *	Ratio 1/3 Plaster Tenders	$19.42	$1.00	$20.42
Plumber *	Ratio 3/2 - Apprentice	$30.29	$9.50	$39.79
Roofer *	Ratio 1/3 – Helper $7.85	$15.40	$0.00	$15.40
Sheet Metal Worker *(incl. HVAC duct and system install.)	Ratio 2/1 - Apprentice	$25.37	$12.39	$37.76
Sprinkler Fitter * (Fire sprinklers)	Ratio 1/1 – Apprentice	$26.36	$16.52	$42.88
Tile Finisher *	Ratio 1/3 – Helper $8.08	$12.00	$0.43	$12.43
Tile Setter *	Ratio 1/3 – Helper $10.91	$16.17	$0.00	$16.17
Truck Driver		$14.18	$0.00	$14.18
Laborers:				
Common Laborer		$9.29	$0.00	$9.29
Mason Tender (Bricklayer's Helper)		$10.13	$0.00	$10.13
Mason Tender (Cement /Concrete Finisher's Helper)		$9.86	$0.00	$9.86
Pipe Layer		$12.35	$0.00	$12.35
Plaster Tender (Plasterer's helper)		$12.90	$2.51	$15.41
Power Equipment Operator:				
Asphalt Paver		$13.50	$0.25	$13.75
Backhoe – Power Equipment Operator		$12.54	$0.00	$12.54
Crane – Power Equipment Operator		$34.85	$9.85	$44.70
Forklift – Power Equipment Operator		$16.00	$0.00	$16.00
Slab and Wall Saw – Power Equipment Operator		$15.54	$3.83	$19.37
Welders - Receive rate prescribed for craft performing operation in which welding is incidental				

*** When Apprentices are shown, Helpers cannot be utilized. See Definitions for allowable journeymen to apprentice /helpers.**

Building Construction Prevailing Wages Classification Definitions

Asbestos Worker/Insulator * - Ratio 1Journeyman /1 Apprentice (1 Journeyman / 1 Apprentice) (Including application of all insulating materials, protective coverings, coatings and finishing to all type of mechanical systems). Applies insulating material to exposed surfaces of structures, such as air ducts, hot and cold pipes, storage tanks, and cold storage rooms: Reads blueprints and selects required insulation material (in sheet, tubular, or roll form), such as fiberglass, foam rubber, styrofoam, cork, or urethane, based on material's heat retaining or excluding characteristics. Brushes adhesives on or attaches metal adhesive-backed pins to flat surfaces as necessary to facilitate application of insulation material. Measures and cuts insulation material to specified size and shape for covering flat or round surfaces, using tape measure, knife, or scissors. Fits, wraps, or attaches required insulation material around or to structure, following blueprint specifications. Covers or seals insulation with preformed plastic covers, canvas strips, sealant, or tape to secure insulation to structure, according to type of insulation used and structure covered, using staple gun, trowel, paintbrush, or caulking gun.

Asbestos Abatement Worker * (Ceilings, Floors, & Walls only) Ratio 1 Journeyman /3 Helpers
Removes asbestos from ceilings, walls, beams, boilers, and other structures, following hazardous waste handling guidelines: Assembles scaffolding and seals off work area, using plastic sheeting and duct tape. Positions mobile decontamination unit or portable showers at entrance of work area. Builds connecting walkway between mobile unit or portable showers and work area, using hand tools, lumber, nails, plastic sheeting, and duct tape. Positions portable air evacuation and filtration system inside work area. Sprays chemical solution over asbestos covered surfaces, using tank with attached hose and nozzle, to soften asbestos. Cuts and scrapes asbestos from surfaces, using knife and scraper. Shovels asbestos into plastic disposal bags and seals bags, using duct tape. Cleans work area of loose asbestos, using vacuum, broom, and dustpan. Places asbestos in disposal bags and seals bags, using duct tape. Dismantles scaffolding and temporary walkway, using hand tools, and places plastic sheeting and disposal bags into transport bags. Seals bags, using duct tape, and loads bags into truck.

Boilermaker * - Ratio 5 Journeymen /1 Apprentice
Assembles, analyzes defects in, and repairs boilers, pressure vessels, tanks, and vats in field, following blueprints and using hand tools and portable power tools and equipment: Locates and marks reference points for columns or plates on foundation, using master straightedge, squares, transit, and measuring tape, and applying knowledge of geometry. Attaches rigging or signals crane operator to lift parts to specified position. Aligns structures or plate sections to assemble boiler frame, tanks, or vats, using plumb bobs, levels, wedges, dogs, or turnbuckles. Hammers, flame cuts, files, or grinds irregular edges of sections or structural parts to facilitate fitting edges together. Bolts or arc-welds structures and sections together. Positions drums and headers into supports and bolts or welds supports to frame. Aligns water tubes and connects and expands ends to drums and headers, using tube expander. Bells, beads with power hammer, or welds tube ends to ensure leak proof joints. Bolts or welds casing sections, uptakes, stacks, baffles, and such fabricated parts as chutes, air heaters, fan stands, feeding tube, catwalks, ladders, coal hoppers, and safety hatch to frame, using wrench. Installs manholes, hand holes, valves, gauges, and feed water connection in drums to complete assembly of water tube boilers. Assists in testing assembled vessels by pumping water or gas under specified pressure into vessel and observing instruments for evidence of leakage. Repairs boilers or tanks in field by unbolting or flame cutting defective sections or tubes, straightening plates, using torch or jacks, installing new tubes, fitting

and welding new sections and replacing worn lugs on bolts. May rivet and caulk sections of vessels, using pneumatic riveting and caulking hammers.

Bricklayer * (See Mason Tender) - Ratio 1Journeyman /3 Mason Tender Brick
Lays building materials, such as brick, structural tile, and concrete cinder, glass, gypsum, and terra cotta block (except stone) to construct or repair walls, partitions, arches, sewers, and other structures: Measures distance from reference points and marks guidelines on working surface to lay out work. Spreads soft bed (layer) of mortar that serves as base and binder for block, using trowel. Applies mortar to end of block and positions block in mortar bed. Taps block with trowel to level, align, and embed in mortar, allowing specified thickness of joint. Removes excess mortar from face of block, using trowel. Finishes mortar between brick with pointing tool or trowel. Breaks bricks to fit spaces too small for whole brick, using edge of trowel or brick hammer. Determines vertical and horizontal alignment of courses, using plumb bob, gauge line (tightly stretched cord), and level. Fastens brick or terra cotta veneer to face of structures, with tie wires embedded in mortar between bricks, or in anchor holes in veneer brick. May weld metal parts to steel structural members. May apply plaster to walls and ceiling, using trowel, to complete repair work.

Carpenter * (Including Acoustical Ceiling Work) - Ratio 2 Journeymen /1 Apprentice
Constructs, erects, installs, and repairs structures and fixtures of wood, plywood, and wallboard, using carpenter's hand tools and power tools, and conforming to local building codes: Studies blueprints, sketches, or building plans for information pertaining to type of material required, such as lumber or fiberboard, and dimensions of structure or fixture to be fabricated. Selects specified type of lumber or other materials. Prepares layout, using rule, framing square, and calipers. Marks cutting and assembly lines on materials, using pencil, chalk, and marking gauge. Shapes materials to prescribed measurements, using saws, chisels, and planes. Assembles cut and shaped materials and fastens them together with nails, dowel pins, or glue. Verifies trueness of structure with plumb bob and carpenter's level. Erects framework for structures and lays subflooring. Builds stairs and lays out and installs partitions and cabinetwork. Covers sub floor with building paper to keep out moisture and lays hardwood, parquet, and wood-strip-block floors by nailing floors to sub floor or cementing them to mastic or asphalt base. Applies shock-absorbing, sound-deadening, and decorative paneling to ceilings and walls. Fits and installs prefabricated window frames, doors, doorframes, weather stripping, interior and exterior trim, and finish hardware, such as locks, letter drops, and kick plates. Constructs forms and chutes for pouring concrete. Erects scaffolding and ladders for assembling structures above ground level. May weld metal parts to steel structural members.

Cement Mason/Concrete Finisher *(Mason Tender Cement/Concrete) - Ratio 1 Journeyman /3 Mason Tender Cement
Finisher; concrete floater Smooths and finishes surfaces of poured concrete floors, walls, sidewalks, or curbs to specified textures, using hand tools or power tools, including floats, trowels, and screeds: Signals concrete deliverer to position truck to facilitate pouring concrete. Moves discharge chute of truck to direct concrete into forms. Spreads concrete into inaccessible sections of forms, using rake or shovel. Levels concrete to specified depth and workable consistency, using hand held screed and floats to bring water to surface and produce soft topping. Smooths, and shapes surfaces of freshly poured concrete, using straightedge and float or power screed. Finishes concrete surfaces, using power trowel, or wets and rubs concrete with abrasive stone to impart finish. Removes rough or defective spots from concrete surfaces, using power grinder or chisel and hammer, and patches holes with fresh concrete or epoxy compound. Molds expansion joints and edges, using edging tools, jointers, and straightedge. May sprinkle colored stone chips, powdered steel, or coloring powder on concrete to produce prescribed finish. May produce rough concrete surface, using broom. May mix cement, using hoe or concrete-mixing machine. May direct sub

grade work, mixing of concrete, and setting of forms.

Drywall Finisher/Taper - Ratio 1Journeyman /3 Helpers
Wallboard and plasterboard; sheetrock taper; taper and bedder; taper and floater. Seals joints between plasterboard or other wallboards to prepare wall surface for painting or papering; Mixes sealing compound by hand or with portable electric mixer, and spreads compound over joints between boards, using trowel, broad knife, or spatula. Presses paper tape over joint to embed tape into compound and seal joint, or tapes joint, using mechanical applicator that spreads compound and embeds tape in one operation. Spreads and smooth's cementing material over tape, using trowel or floating machine to blend joint with wall surface. Sands rough spots after cement has dried. Fills cracks and holes in walls and ceiling with sealing compound. Installs metal molding at corners in lieu of sealant and tape. Usually works as member of crew. May apply texturing compound and primer to walls and ceiling preparatory to final finishing, using brushes, roller, or spray gun. May countersink nails or screws below surface of wall prior to applying sealing compound, using hammer or screwdriver.

Drywall Hanger - Ratio 1 Journeyman /3 Helpers
Dry-wall installer; gypsum dry-wall systems installer. Plans gypsum drywall installations, erects metal framing and furring channels for fastening drywall, and installs drywall to cover walls, ceilings, soffits, shafts, and movable partitions in residential, commercial, and industrial buildings: Reads blueprints and other specifications to determine method of installation, work procedures, and material, tool, and work aid requirements. Lays out reference lines and points for use in computing location and position of metal framing and furring channels and marks position for erecting metalwork, using chalk line. Measures, marks, and cuts metal runners, studs, and furring channels to specified size, using tape measure, straightedge and hand and portable power cutting tools. Secures metal framing to walls and furring channels to ceilings, using hand and portable power tools.
Measures and marks cutting lines on drywall, using square, tape measure, and marking devices. Scribes cutting lines on drywall, using straightedge and utility knife and breaks board along cut lines. Fits and fastens board into specified position on wall, using screws, hand tools, portable power tools, or adhesive. Cuts openings into board for electrical outlets, vents, or fixtures, using keyhole saw or other cutting tools. Measures, cuts, assembles, and installs metal framing and decorative trim for windows, doorways, and vents. Fits, aligns, and hangs doors and installs hardware, such as locks and kick plates (Includes Installing Metal Studs).

Electrician * Ratio 3 Journeymen /2 Apprentice
Plans layout, installs, and repairs wiring, electrical fixtures, apparatus, and control equipment: Plans new or modified installations to minimize waste of materials, provide access for future maintenance, and avoid unsightly, hazardous, and unreliable wiring, consistent with specifications and local electrical codes. Prepares sketches showing location of wiring and equipment, or follows diagrams or blueprints, ensuring that concealed wiring is installed before completion of future walls, ceilings, and flooring. Measures, cuts, bends, threads, assembles, and installs electrical conduit, using tools, such as hacksaw, pipe threader, and conduit bender. Pulls wiring through conduit. Splices wires by stripping insulation from terminal leads, using knife or pliers, twisting or soldering wires together, and applying tape or terminal caps. Connects wiring to lighting fixtures and power equipment, using hand tools. Installs control and distribution apparatus, such as switches, relays, and circuit-breaker panels, fastening in place with screws or bolts, using hand tools and power tools. Connects power cables to equipment, such as electric range or motor, and installs grounding leads. Tests continuity of circuit to ensure electrical compatibility and safety of components, using testing instruments, such as ohmmeter, battery and buzzer, and oscilloscope. Observes functioning of installed equipment or system to detect hazards and need for adjustments, relocation,

or replacement (Including Pulling Wire and Low Voltage Wiring and Installation of Fire Alarms, Security Systems, Telephones, and Computers).

Elevator Mechanic * - Ratio 1 Journeyman /1 Apprentice
FOOTNOTES: a. - Employer contributes 8% of basic hourly rate for over 5 years' service and 6% of basic hourly rate for 6 months to 5 years' service as Vacation Pay Credit. Paid Holidays: New Year's Day; Memorial Day; Independence Day Labor Day; Thanksgiving Day; Friday after Thanksgiving Day; Christmas Day.

Erector; elevator installer; elevator mechanic. Assembles and installs electric and hydraulic freight and passenger elevators, escalators, and dumbwaiters, determining layout and electrical connections from blueprints: Studies blueprints and lays out location of framework, counterbalance rails, motor pump, cylinder, and plunger foundations. Drills holes in concrete or structural steel members with portable electric drill. Secures anchor bolts or welds brackets to support rails and framework, and verifies alignment with plumb bob and level. Cuts prefabricated sections of framework, rails, and other elevator components to specified dimensions, using acetylene torch, power saw, and disk grinder. Installs cables, counterweights, pumps, motor foundations, escalator drives, guide rails, elevator cars, and control panels, using hand tools. Connects electrical wiring to control panels and electric motors. Installs safety and control devices. Positions electric motor and equipment on top of elevator shaft, using hoists and cable slings.

Formbuilder/Formsetter - Ratio 1Journeyman /3 Helpers
Constructs built-in-place or prefabricated wooden forms, according to specifications, for molding concrete structures: Studies blueprints and diagrams to determine type and dimension of forms to be constructed. Saws lumber to blueprint dimensions, using handsaw or power saw, and nails lumber together to make form panels. Erects built-in-place forms or assembles and installs prefabricated forms on construction site according to blueprint specifications, using hand tools, plumb rule, and level. Inserts spreaders and tie rods between opposite faces of form to maintain specified dimensions. Anchors and braces forms to fixed objects, using nails, bolts, anchor rods, steel cables, planks, and timbers.

Glazier - Ratio 1 Journeyman /3 Helpers
Installs glass in windows, skylights, store fronts, and display cases, or on surfaces, such as building fronts, interior walls, ceilings, and tabletops: Marks outline or pattern on glass, and cuts glass, using glasscutter. Breaks off excess glass by hand or with notched tool. Fastens glass panes into wood sash with glaziers points, and spreads and smoothes putty around edge of panes with knife to seal joints. Installs mirrors or structural glass on building fronts, walls, ceilings, or tables, using mastic, screws, or decorative molding. Bolts metal hinges, handles, locks, and other hardware to prefabricated glass doors. Sets glass doors into frame and fits hinges. May install metal window and doorframes into which glass panels are to be fitted. May press plastic adhesive film to glass or spray glass with tinting solution to prevent light glare. May install stained glass windows.

Insulator (Batt and Foam) - Ratio 1 Journeyman /3 Helpers
Applies batt and form insulation to walls, ceilings and other surfaces according to manufacturers specifications and blue print instructions. May use sealants such as cement plaster or asphalt compound to seal insulation; may spread concrete over floor slabs to form wearing floor: brushes adhesives, cuts insulating materials to specified shape to cover surfaces; uses tape or other sealants to adhere insulation to surfaces. May use staple gun, towel, paintbrushes and caulking guns.

Ironworker (Reinforcing) - Ratio 1 Journeyman/3 Helpers
Positions and secures steel bars in concrete forms to reinforce concrete; places rods in forms, spacing and fastening together with wire and pliers. Cuts bars using hacksaw, bar cutters or acetylene torch. Bends steel rods with hand tools or rod bending machine; reinforces concrete with wire mesh; welds reinforcing bars together.

Ironworker (Structural) - Ratio 1 Journeyman /3 Helpers
Erector; ironworker; steel erector; structural-iron erector; structural-iron worker; structural steel erector. Performs any combination of following duties to raise, place, and unite girders, columns, and other structural-steel members to form completed structures or structure frameworks, working as member of crew: Sets up hoisting equipment for raising and placing structural-steel members. Fastens steel members to cable of hoist, using chain, cable, or rope. Signals worker operating hoisting equipment to lift and place steel member. Guides member, using tab line (rope) or rides on member in order to guide it into position. Pulls, pushes, or pries steel members into approximate position while member is supported by hoisting device. Forces members into final position, using turnbuckles, crowbars, jacks, and hand tools. Aligns rivet holes in member with corresponding holes in previously placed member by driving drift pins or handle of wrench through holes. Verifies vertical and horizontal alignment of members, using plumb bob and level.

Lather - Ratio 1 Journeyman /3 Helpers
Fastens wooden, metal, or rockboard lath to walls, ceilings, and partitions of buildings to provide supporting base for plaster, fireproofing, or acoustical material, using hand tools and portable power tools: Erects horizontal metal framework to which laths are fastened, using nails, bolts, and studgun. Drills holes in floor and ceiling, using portable electric tool, and drives ends of wooden or metal studs into holes to provide anchor for furring or rockboard lath. Wires horizontal strips to furring to stiffen framework. Cuts lath to fit openings and projections, using hand tools or portable power tools. Wires, nails, clips, or staples lath to framework, ceiling joists, and flat concrete surfaces. Bends metal lath to fit corners, or attaches preformed corner reinforcements. Wires plasterer's channels to overhead structural framework to provide support for plaster or acoustical ceiling tile.

Painter (Brush, Roller, and Spray) - Ratio 1Journeyman /3 Helpers
Applies coats of paint, varnish, stain, enamel, or lacquer to decorate and protect interior or exterior surfaces, trimmings, and fixtures of buildings and other structures: Reads work order or receives instructions from supervisor or homeowner regarding painting. Smoothes surfaces, using sandpaper, brushes, or steel wool, and removes old paint from surfaces, using paint remover, scraper, wire brush, or blowtorch to prepare surfaces for painting. Fills nail holes, cracks, and joints with caulk, putty, plaster, or other filler, using caulking gun and putty knife. Selects premixed paints, or mixes required portions of pigment, oil, and thinning and drying substances to prepare paint that matches specified colors. Removes fixtures, such as pictures and electric switchcovers, from walls prior to painting, using screwdriver. Spreads dropcloths over floors and room furnishings, and covers surfaces, such as baseboards, doorframes, and windows with masking tape and paper to protect surfaces during painting. Paints surfaces, using brushes, spray gun, or paint rollers. Simulates wood grain, marble, brick, or tile effects. Applies paint with cloth, brush, sponge, or fingers to create special effects. Erects scaffolding or sets up ladders to perform tasks above ground level.

Pipe fitter * (HVAC Pipe Only) - Ratio 1Journeymen /1 Apprentice (See Schedule included)
Lays out, assembles, installs, and maintains pipe systems, pipe supports, and related hydraulic and pneumatic equipment for steam, hot water, heating, cooling, lubricating, sprinkling, and industrial production and processing systems, applying knowledge of system operation, and following

blueprints: Selects type and size of pipe, and related materials and equipment, such as supports, hangers, and hydraulic cylinders, according to specifications. Inspects work site to determine presence of obstructions and to ascertain that holes cut for pipe will not cause structural weakness. Plans installation or repair to avoid obstructions and to avoid interfering with activities of other workers. Cuts pipe, using saws, pipe cutter, hammer and chisel, cutting torch, and pipe cutting machine. Threads pipe, using pipe threading machine. Bends pipe, using pipe bending tools and pipe bending machine. Assembles and installs variety of metal and nonmetal pipes, tubes, and fittings, including iron, steel, copper, and plastic. Connects pipes, using threaded, caulked, soldered, brazed, fused, or cemented joints, and hand tools. Secures pipes to structure with brackets, clamps, and hangers, using hand tools and power tools. Installs and maintains hydraulic and pneumatic components of machines and equipment, such as pumps and cylinders, using hand tools. Installs and maintains refrigeration and air conditioning systems, including compressors, pumps, meters, pneumatic and hydraulic controls, and piping, using hand tools and power tools, and following specifications and blueprints. Increases pressure in pipe system and observes connected pressure gauge to test system for leaks.

Pipe Fitter * (Excluding HVAC Pipe) – Ratio 1Journeymen /3 Helpers
Lays out, assembles, installs, and maintains pipe systems, pipe supports, and related hydraulic and pneumatic equipment for steam, hot water, heating, cooling, lubricating, sprinkling, and industrial production and processing systems, applying knowledge of system operation, and following blueprints: Selects type and size of pipe, and related materials and equipment, such as supports, hangers, and hydraulic cylinders, according to specifications. Inspects work site to determine presence of obstructions and to ascertain that holes cut for pipe will not cause structural weakness. Plans installation or repair to avoid obstructions and to avoid interfering with activities of other workers. Cuts pipe, using saws, pipe cutter, hammer and chisel, cutting torch, and pipe cutting machine. Threads pipe, using pipe-threading machine. Bends pipe, using pipe bending tools and pipe bending machine. Assembles and installs variety of metal and nonmetal pipes, tubes, and fittings, including iron, steel, copper, and plastic. Connects pipes, using threaded, caulked, soldered, brazed, fused, or cemented joints, and hand tools. Secures pipes to structure with brackets, clamps, and hangers, using hand tools and power tools. Installs and maintains hydraulic and pneumatic components of machines and equipment, such as pumps and cylinders, using hand tools. Installs and maintains refrigeration and air conditioning systems, including compressors, pumps, meters, pneumatic and hydraulic controls, and piping, using hand tools and power tools, and following specifications and blueprints. Increases pressure in pipe system and observes connected pressure gauge to test system for leaks. May weld pipe supports to structural steel members. May observe production machines in assigned area of manufacturing facility to detect machinery malfunctions. May operate machinery to verify repair. May modify programs of automated machinery, such as robots and conveyors, to change motion and speed of machine, using teach pendant, control panel, or keyboard and display screen of robot controller and programmable controller. May be designated Steam Fitter (construction) when installing piping systems that must withstand high pressure

Plasterer * See Plaster Tender - Ratio 1 Journeyman /3 Plaster Tenders
Applies coats of plaster to interior walls, ceilings, and partitions of buildings, to produce finished surface, according to blueprints, architect's drawings, or oral instructions, using hand tools and portable power tools: Directs workers to mix plaster to desired consistency and to erect scaffolds. Spreads plaster over lath or masonry base, using trowel, and smoothes plaster with darby and float to attain uniform thickness. Applies scratch, brown, or finish coats of plaster to wood, metal, or board lath successively. Roughens undercoat with scratcher (wire or metal scraper) to provide bond for succeeding coats of plaster.

Plumber * (Excluding HVAC Pipe) - Ratio 3 Journeymen /2 Apprentice
Assembles, installs, and repairs pipes, fittings, and fixtures of heating, water, and drainage systems, according to specifications and plumbing codes: Studies building plans and working drawings to determine work aids required and sequence of installations. Inspects structure to ascertain obstructions to be avoided to prevent weakening of structure resulting from installation of pipe. Locates and marks position of pipe and pipe connections and passage holes for pipes in walls and floors, using ruler, spirit level, and plumb bob. Cuts openings in walls and floors to accommodate pipe and pipe fittings, using hand tools and power tools. Cuts and threads pipe, using pipe cutters, cutting torch, and pipe-threading machine. Bends pipe to required angle by use of pipe-bending machine or by placing pipe over block and bending it by hand. Assembles and installs valves, pipe fittings, and pipes composed of metals, such as iron, steel, brass, and lead, and nonmetals, such as glass, vitrified clay, and plastic, using hand tools and power tools. Joins pipes by use of screws, bolts, fittings, solder, plastic solvent, and caulks joints. Fills pipe system with water or air and reads pressure gauges to determine whether system is leaking. Installs and repairs plumbing fixtures, such as sinks, commodes, bathtubs, water heaters, hot water tanks, garbage disposal units, dishwashers, and water softeners. Repairs and maintains plumbing by replacing washers in leaky faucets, mending burst pipes, and opening clogged drains.

Roofer - Ratio 1 Journeyman/3 Helpers
Covers roofs with roofing materials other than sheet metal, such as composition shingles or sheets, wood shingles, or asphalt and gravel, to waterproof roofs: Cuts roofing paper to size, using knife, and nails or staples it to roof in overlapping strips to form base for roofing materials. Installs gutters and downs spouts. Aligns roofing material with edge of roof, and overlaps successive layers, gauging distance of overlap with chalk line, gauge on shingling hatchet, or by lines on shingles. Fastens composition shingles or sheets to roof with asphalt, cement, or nails. Punches holes in slate, tile, terra cotta, or wooden shingles, using punch and hammer. Cuts strips of flashing and fits them into angles formed by walls, vents, and intersecting roof surfaces. When applying asphalt or tar and gravel to roof, mops or pours hot asphalt or tar onto roof base. Applies alternate layers of hot asphalt or tar and roofing paper until roof covering is as specified. Applies gravel or pebbles over top layer, using rake or stiff bristled broom.

Sheet metal worker * Ratio 2 Journeymen /1 Apprentice (Including Setting HVAC Duct & System Installs)
Fabricates, assembles, installs and repairs sheet metal products, including sheet metal roof (also see Roofer). Operates soldering and welding equipment to join together sheet metal parts. Seals seams and joints with sealant. Installs roof sheets, trims, flashing, gutters down spouts and other related items. Performs other related duties.

Sprinkler Fitter (Fire) * - Ratio 1 Journeyman /1 Apprentice
Lays out, assembles, installs, and maintains pipe systems, pipe supports, and related hydraulic and pneumatic equipment for steam, hot water, heating, cooling, lubricating, sprinkling, and industrial production and processing systems, applying knowledge of system operation, and following blueprints: Selects type and size of pipe, and related materials and equipment, such as supports, hangers, and hydraulic cylinders, according to specifications. Inspects work site to determine presence of obstructions and to ascertain that holes cut for pipe will not cause structural weakness. Plans installation or repair to avoid obstructions and to avoid interfering with activities of other workers. Cuts pipe, using saws, pipe cutter, hammer and chisel, cutting torch, and pipe cutting machine. Threads pipe, using pipe-threading machine. Bends pipe, using pipe bending tools and pipe bending machine. Assembles and installs variety of metal and nonmetal pipes, tubes, and fittings, including iron, steel, copper, and plastic. Connects pipes, using threaded, caulked, soldered, brazed, fused, or cemented joints, and hand tools. Secures pipes to structure with

brackets, clamps, and hangers, using hand tools and power tools. Installs and maintains hydraulic and pneumatic components of machines and equipment, such as pumps and cylinders, using hand tools. Installs and maintains refrigeration and air conditioning systems, including compressors, pumps, meters, pneumatic and hydraulic controls, and piping, using hand tools and power tools, and following specifications and blueprints. Increases pressure in pipe system and observes connected pressure gauge to test system for leaks. May weld pipe supports to structural steel members. May observe production machines in assigned area of manufacturing facility to detect machinery malfunctions.

May operate machinery to verify repair. May modify programs of automated machinery, such as robots and conveyors, to change motion and speed of machine, using teach pendant, control panel, or keyboard and display screen of robot controller and programmable controller.

Tile Finisher - Ratio 1 Journeyman /3 Helpers

Supplies and mixes construction materials for TILE SETTER (construction) 861.381-054, applies grout, and cleans installed tile: Moves tiles, tile setting tools, and work devices from storage area to installation site manually or using wheelbarrow. Mixes mortar and grout according to standard formulas and request from TILE SETTER (construction), using bucket, water hose, spatula, and portable mixer. Supplies TILE SETTER (construction) with mortar, using wheelbarrow and shovel. Applies grout between joints of installed tile, using grouting trowel. Removes excess grout from tile joints with wet sponge and scrapes corners and crevices with trowel. Wipes surface of tile after grout has set to remove grout residue and polish tile, using nonabrasive materials. Cleans installation site, mixing and storage areas, and installation machines, tools, and equipment, using water and various cleaning tools. Stores tile setting materials, machines, tools, and equipment. May apply caulk, sealers, acid, steam, or related agents to caulk, seal, or clean installed tile, using various application devices and equipment. May modify mixing, grouting, grinding, and cleaning procedures according to type of installation or material used. May assist TILE SETTER (construction) to position and secure metal lath, wire mesh, or felt paper prior to installation of tile. May cut marked tiles to size, using power saw or tile cutter.

Tile Setter - Ratio 1 Journeyman /3 Helpers

Applies tile to walls, floors, ceilings, and promenade roof decks, following design specifications: Examines blueprints, measures and marks surfaces to be covered, and lays out work. Measures and cuts metal lath to size for walls and ceilings with tin snips. Tacks lath to wall and ceiling surfaces with staple gun or hammer. Spreads plaster base over lath with trowel and levels plaster to specified thickness, using screed. Spreads concrete on sub floor, with trowel and levels it with screed.

Spreads mastic or other adhesive base on roof deck, using serrated spreader to form base for promenade tile. Cuts and shapes tile with tile cutters and biters. Positions tile and taps it with trowel handle to affix tile to plaster or adhesive base.

Truck Driver

Drives truck with capacity of more than 3 tons, to transport materials to and from specified destinations: Drives truck to destination, applying knowledge of commercial driving regulations and area roads. Prepares receipts for load picked up. Collects payment for goods delivered and for delivery charges. May maintain truck log, according to state and federal regulations. May maintain telephone or radio contact with supervisor to receive delivery instructions. May load and unload truck. May inspect truck equipment and supplies, such as tires, lights, brakes, gas, oil, and water. May perform emergency roadside repairs, such as changing tires, installing light bulbs, tire chains, and spark plugs. May position blocks and tie rope around items to secure cargo during transit.

Laborers

Common Laborer
Performs any combination of the following tasks in erecting, repairing and wrecking buildings; dig, spread and level dirt and gravel; lift carry and hold building materials, tools and supplies; clean tools, equipment, materials and work areas; mix, pour and spread concrete, asphalt, gravel and other materials; join, wrap and seal sections of pipe; routine non-machine tasks such as removing forms from set concrete, filling expansion joints with asphalt, and placing culverts in trench. May also signal construction equipment operators; measure distances from grade stakes, drive stakes and stretch lines; bolt, nail align and block up under forms; mix and finish poured concrete, erect scaffolding; spread paint or coating to seal surfaces; caulking compounds to seal surfaces; remove projections from concrete, and mount pipe hangers.

Mason Tender Brick (Bricklayer's Helper)

Mason Tender Cement (Concrete Mason's / Concrete Finisher's Helper)

Pipe layer
Lay pipe for storm or sanitation sewers, drains, and water mains. Perform any combination of the following tasks: grade trenches or culverts, position pipe, or seal joints.

Plaster Tender (Plaster's Helper)
Tends machine that pumps plaster or stucco through spray gun for application to ceilings, walls, and partitions of buildings: Starts and stops machine on signals from PLASTERER (construction). Fills hopper of machine with plaster. Turns valves to regulate pump and compressor. Assists in erecting scaffolds.

Power Equipment Operator:

Asphalt Paver (operator)
Operator; bituminous-paving-machine operator; blacktop-paver operator; blacktop spreader; mechanical-spreader operator; paving-machine operator, asphalt or bituminous. Operates machine that spreads and levels hot-mix bituminous paving material on sub grade of highways and streets: Bolts extensions to screed to adjust width, using wrenches. Lights burners to heat screed. Starts engine and controls paving machine to push dump truck and maintain constant flow of asphalt into hopper. Observes distribution of paving material along screed and controls direction of screed to eliminate voids at curbs and joints. Turns valves to regulate temperature of asphalt flowing from hopper when asphalt begins to harden on screed.

Backhoe (operator)
Operates power-driven machine, equipped with movable shovel, to excavate or move coal, dirt, rock, sand, and other materials: Receives written or oral instructions from supervisor regarding material to move or excavate. Pushes levers and depresses pedals to move machine, to lower and push shovel into stockpiled material, to lower and dig shovel into surface of ground, and to lift, swing, and dump contents of shovel into truck, car, or onto conveyor, hopper, or stockpile. Observes markings on ground, hand signals, or grade stakes to remove material, when operating machine at excavation site.

Crane (operator)
Operates electric-, diesel-, gasoline-, or steam-powered guy-derrick or stiff-leg derrick (mast

supported by fixed legs or tripod), to move products, equipment, or materials to and from quarries, storage areas, and processes, or to load and unload trucks or railroad cars: Pushes and pulls levers and depresses pedals to raise, lower, and rotate boom and to raise and lower load line in response to signals.

Forklift (operator)
Drives gasoline-, liquefied gas-, or electric-powered industrial truck equipped with lifting devices, such as forklift, boom, scoop, lift beam and swivel-hook, fork-grapple, clamps, elevating platform, or trailer hitch, to push, pull, lift, stack, tier, or move products, equipment, or materials in warehouse, storage yard, or factory: Moves levers and presses pedals to drive truck and control movement of lifting apparatus. Positions forks, lifting platform, or other lifting device under, over, or around loaded pallets, skids, boxes, products, or materials or hooks tow trucks to trailer hitch, and transports load to designated area. Unloads and stacks material by raising and lowering lifting device.

Slab & Wall Saw (See Related Power Equipment Operator Above)
Use associated power equipment operators already defined.

Apprentices
Apprentices may be used in any of the crafts listed above where noted, if they are currently certified in a program recognized by the Bureau of Apprenticeship and Training, U.S. Department of Labor, providing the proper ratio between journeyman and apprentice is observed. Apprentice certification certificates must be supplied with the first weekly payroll upon which the apprentice's name appears.

Helper (65% of the journeyman classification)
(Must not exceed 3 helpers to 1 journeyman)
A Helper is a semi-skilled worker (rather than a skilled journeyman) who works under the direction of and assists a journeyman. Under the journeyman's direction and supervision, the helper performs a variety of duties to assist the journeyman such as preparing, carrying, and furnishing equipment, supplies and maintaining them in order; cleaning and preparing work areas; lifting, positioning, and holding materials or tools; and other related semi-skilled tasks as directed by the journeyman. A helper may use the tools of the trade at and under the direction of the journeyman. The particular duties performed by a helper vary according to area practice. The journeyman must work in close proximity to the location of the helpers work area. The helpers wage rate shall be calculated at no less than 65% of the prevailing wage for that journeyman's classification.

Helper who assists more than one journeyman craft should be listed with the notation indicating each journeyman craft classification they assist.

WELDERS - Receive rate prescribed for craft performing operation to which welding is incidental.

Pipe fitters * Apprentice Schedule (Excluding HVAC Pipe)

Journeyma	Indentured Apprentice	Apprentice Applicant	Total
1	1	0	1 to 1
3	2	1	3 to 3
5	3	2	5 to 5
8	4	3	8 to 7
12	5	4	12 to 9
16	6	5	16 to 11
20	7	6	20 to 13
25	8	7	25 to 15
30	9	8	30 to 17
40	10	9	40 to 19
50	11	10	50 to 21

NOTE: Continue after 50 Journeyman — ONE (1) Indentured Apprentice and one (1) Apprentice Applicant for every ten (10) Journeyman

---

*** When Apprentices are shown, Helpers cannot be utilized**

APPRENTICES (see definitions)

Registered Apprenticeship Ratios

For All Apprentices

Apprentice duties consist but are not limited to reading blue prints, lay out, fabrication, installation, and assembly. Other duties are the setting up and operation of fabrication machines, using hand tools, power tools, lifting/handling devices, sealing if necessary according to their particular craft. Apprentices also are trained in the preparation process of a job that include but not limited to staging, planning, distribution, and sectioning of materials. Apprentices may be used in any of the crafts listed where noted on the Prevailing Wage Rate Schedule, if they are currently certified in a program recognized by the Bureau of Apprenticeship and Training, U.S. Department of Labor, providing the proper ratio between journeyman and apprentice is observed. Apprentice certification certificates must be supplied with the first weekly payroll upon which the apprentice's name appears. Helpers or Laborers cannot be utilized when Apprentices are shown

Asbestos Worker / Insulator

City of Houston allows the use of 1 Journeyman and 1 Apprentice, the Apprentice can be used with the first Journeyman. No other Apprentices can be added until the 2th Journeyman is added. All Apprentices are to be under the direct supervision of a Journeyman.
1 Journeyman w/ 1 Apprentice
2 Journeymen w/ 2 Apprentices

Boilermakers

City of Houston allows the use of 5 Journeymen and 1 Apprentice, the Apprentice can be used with the first Journeyman. No other Apprentices can be added until the 6th Journeyman is added. All Apprentices are to be under the direct supervision of a Journeyman.
1-5 Journeymen w/ 1 Apprentice
6-10 Journeymen w/ 2 Apprentices

Carpenter

City of Houston allows the use of 2 Journeymen and 1 Apprentice, the Apprentice can be used with the first Journeyman. No other Apprentices can be added until the 4th Journeyman is added. All Apprentices are to be under the direct supervision of a Journeyman.
1-2 Journeymen w/ 1 Apprentice
3-4 Journeymen w/ 2 Apprentices
5-6 Journeymen w/ 3 Apprentices

Electrician

City of Houston allows the use of 3 Journeymen and 2 Apprentices, the Apprentice can be used with the first Journeyman. No other Apprentices can be added until the 3rd Journeyman is added. All Apprentices are to be under the direct supervision of a Journeyman. All Journeymen and Apprentices must hold a current license from the State of Texas.

1 Journeyman w/ 1 Apprentice
2 Journeymen w/ 1 Apprentice
3 Journeymen w/ 2 Apprentices
4 Journeymen w/ 3 Apprentices
5 Journeymen w/ 3 Apprentices
6 Journeymen w/ 4 Apprentices
7 Journeymen w/ 4 Apprentices
8 Journeymen w/ 4 Apprentices
9 Journeymen w/ 4 Apprentices
10 Journeymen w/ 5 Apprentices

Plumbers

City of Houston allows the use of 3 Journeymen and 2 Apprentices, the Apprentice can be used with the first Journeyman. No other Apprentices can be added until the 3rd Journeyman is added. All Apprentices are to be under the direct supervision of a Journeyman. All Journeymen and Apprentices must hold a current license from the State of Texas.

1 Journeyman w/ 1 Apprentice
2 Journeymen w/ 1 Apprentice
3 Journeymen w/ 2 Apprentices
4 Journeymen w/ 3 Apprentices
5 Journeymen w/ 3 Apprentices
6 Journeymen w/ 4 Apprentices
7 Journeymen w/ 4 Apprentices
8 Journeymen w/ 4 Apprentices
9 Journeymen w/ 4 Apprentices
10 Journeymen w/ 5 Apprentices

Sprinkler Fitter

City of Houston allows the use of 1 Journeyman and 1 Apprentice, the Apprentice can be used with the first Journeyman. No other Apprentices can be added until the 2th Journeyman is added. All Apprentices are to be under the direct supervision of a Journeyman.

1 Journeyman w/ 1 Apprentice
2 Journeymen w/ 2 Apprentices
Sheetmetal Worker

City of Houston allows the use of 2 Journeymen and 1 Apprentice, the Apprentice can be used with the first Journeyman. No other Apprentices can be added until the 4th Journeyman is added. All Apprentices are to be under the direct supervision of a Journeyman.

1-2 Journeymen w/ 1 Apprentice
3-4 Journeymen w/ 2 Apprentices
5-6 Journeymen w/ 3 Apprentices

Pipefitter

City of Houston allows the use of 1 Journeymen and 1 Apprentice, the Apprentice can be used with the first Journeyman. No other Apprentices can be added until the 4th Journeyman is added. All Apprentices are to be under the direct supervision of a Journeyman.

1 Journeyman w/ 1 Apprentice
2 Journeymen w/ 1 Apprentice
3 Journeymen w/ 2 Apprentices
4 Journeymen w/ 3 Apprentices
5 Journeymen w/ 3 Apprentices
6 Journeymen w/ 4 Apprentices
7 Journeymen w/ 4 Apprentices
8 Journeymen w/ 4 Apprentices
9 Journeymen w/ 4 Apprentices
10 Journeymen w/ 5 Apprentices

HELPER (see definitions)

(Must not exceed 3 helpers to 1 journeyman)
A Helper is a semi-skilled laborer (rather than a skilled journeyman) who works under the direction of and assists a journeyman. Under the journeyman's direction and supervision, the helper

performs a variety of duties to assist the journeyman such as preparing, carrying, and furnishing equipment, supplies and maintaining them in order; cleaning and preparing work areas; lifting, positioning, and holding materials or tools; and other related semi-skilled tasks as directed by the journeyman. A helper may use the tools of the trade at and under the direction of the journeyman. The particular duties performed by a helper vary according to area practice. The journeyman must work in close proximity to the location of the helpers work area. The helper's wage rate shall be calculated at no less than 65% of the prevailing wage for that journeyman's classification. Helper who assists more than one journeyman craft should be listed with the notation indicating each journeyman craft classification they assist.

Welders
Receive rate prescribed for craft performing operation is which welding is incidental

Pipefitters * Apprentice Schedule (Excluding HVAC Pipe)

NOTE: Continue after 50 Journeyman - ONE (1) Indentured Apprentice and one (1) Apprentice Applicant for every ten (10) Journeyman

	Indentured	Apprentice	
Journeyman	Apprentice	Applicant	Total
1	1	0	1 to 1
3	2	1	3to 3
5	3	2	5 to 5
8	4	3	8 to 7
12	5	4	12 to 9
16	6	5	16 to 11
20	7	6	20 to 13
25	8	7	25 to 15
30	9	8	30 to 17
40	10	9	40 to 19
50	11	10	50 to 21

When Apprentices are shown, Helpers cannot be utilized

If there are questions as to the classification of a worker, contact the Contract Compliance Officer in writing with a description of the work to be performed. After review the Contract Compliance Officer will respond in writing with the classification and wage rate to be paid the worker in question.

Fringe Benefits

If the worker is not receiving fringe benefits, they must be paid in cash if noted on the prevailing wage schedule along with the base rate. The term wages means the basic hourly rate of pay; any contribution irrevocably made by a contractor or subcontractor to a trustee or to a third person pursuant to a bona fide fringe benefit fund, plan, or program; and the rate of costs to the

contractor or subcontractor which may be reasonably anticipated in providing bona fide fringe benefits to laborers and mechanics pursuant to an enforceable commitment to carry out a financially responsible plan of program, which was communicated in writing to the laborers and mechanics affected. The fringe benefits enumerated in the Davis-Bacon Act include medical or hospital care, pensions on retirement or death, compensation for injuries or illness resulting from occupational activity, or insurance to provide any of the foregoing; unemployment benefits; life insurance, disability insurance, sickness insurance, or accident insurance; vacation or holiday pay; defraying costs of apprenticeship or other similar programs; or other bona fide fringe benefits. Fringe benefits do not include benefits required by other Federal, State, or local law. The prevailing wages (including fringe benefits) as adopted for this contract are based upon a survey performed under the Davis-Bacon Act. Thus determinations in regard to fringe benefits, to the extent practicable, will be based upon the standards set forth in the following federal regulations.

Title 29, Code of Federal Regulations, Part 4
Labor Standards for Federal Service Contracts

(29 CFR 4.169-4.171)

29 CFR 4.170 - Furnishing fringe benefits or equivalents.

(a) General. Fringe benefits required under the Act shall be furnished, separate from and in addition to the specified monetary wages, by the contractor or subcontractor to the employees engaged in performance of the contract, as specified in the determination of the Secretary or his authorized representative and prescribed in the contract documents. Section 2(a)(2) of the Act provides that the obligation to furnish the specified benefits "may be discharged by furnishing any equivalent combinations of fringe benefits or by making equivalent or differential payments in cash under rules and regulations established by the Secretary." The governing rules and regulations for furnishing such equivalents are set forth in Sec. 4.177 of this subpart. An employer cannot offset an amount of monetary wages paid in excess of the wages required under the determination in order to satisfy his fringe benefit obligations under the Act, and must keep appropriate records separately showing amounts paid for wages and amounts paid for fringe benefits.
(b) Meeting the requirement, in general. The various fringe benefits listed in the Act and in Sec. 4.162(a) are illustrative of those which may be found to be prevailing for service employees in a particular locality. The benefits which an employer will be required to furnish employees performing on a particular contract will be specified in the contract documents. A contractor may dispose of certain of the fringe benefit obligations which may be required by an applicable fringe benefit determination, such as pension, retirement, or health insurance, by irrevocably paying the specified contributions for fringe benefits to an independent trustee or other third person pursuant to an existing "bona fide" fund, plan, or program on behalf of employees engaged in work subject to the Act's provisions. Where such a plan or fund does not exist, a contractor must discharge his obligation relating to fringe benefits by furnishing either an equivalent combination of "bona fide" fringe benefits or by making equivalent payments in cash to the employee, in accordance with the regulations in Sec. 4.177.

29 CFR 4.171 – "Bona fide" fringe benefits.

(a) To be considered a ``bona fide" fringe benefit for purposes of the Act, a fringe benefit plan, fund, or program must constitute a legally enforceable obligation, which meets the following criteria:

(1) The provisions of a plan, fund, or program adopted by the contractor, or by contract as a result of collective bargaining, must be specified in writing, and must be communicated in writing to the affected employees. Contributions must be made pursuant to the terms of such plan, fund, or program. The plan may be either contractor-financed or a joint contractor employee contributory plan. For example, employer contributions to Individual Retirement Accounts (IRAs) approved by IRS are permissible. However, any contributions made by employees must be voluntary, and if such contributions are made through payroll deductions, such deductions must be made in accordance with Sec. 4.168. No contribution toward fringe benefits made by the employees themselves, or fringe benefits provided from monies deducted from the employee's wages may be included or used by an employer in satisfying any part of any fringe benefit obligation under the Act.

(2) The primary purpose of the plan must be to provide systematically for the payment of benefits to employees on account of death, disability, advanced age, retirement, illness, medical expenses, hospitalization, supplemental unemployment benefits, and the like.

(3) The plan must contain a definite formula for determining the amount to be contributed by the contractor and a definite formula for determining the benefits for each of the employees participating in the plan.

(4) Except as provided in paragraph (b), the contractor's contributions must be paid irrevocably to a trustee or third person pursuant to an insurance agreement, trust or other funded arrangement. The trustee must assume the usual fiduciary responsibilities imposed upon trustees by applicable law. The trust or fund must be set up in such a way that the contractor will not be able to recapture any of the contributions paid in nor in any way divert the funds to its own use or benefit.

(5) Benefit plans or trusts of the types listed in 26 U.S.C. 401(a) which are disapproved by the Internal Revenue Service as not satisfying the requirements of section 401(a) of the Internal Revenue Code or which do not meet the requirements of the Employee Retirement Income Security Act of 1974, 29 U.S.C. 1001, et seq. and regulations thereunder, are not deemed to be ``bona fide" plans for purposes of the Service Contract Act.

(6) It should also be noted that such plans must meet certain other criteria as set forth in Sec. 778.215 of 29 CFR part 778 in order for any contributions to be excluded from computation of the regular rate of pay for overtime purposes under the Fair Labor Standards Act (Secs. 4.180-4.182).

(b)(1) Unfunded self-insured fringe benefit plans (other than fringe benefits such as vacations and holidays which by their nature are normally unfunded) under which contractors allegedly make "out of pocket" payments to provide benefits as expenses may arise, rather than making irrevocable contributions to a trust or other funded arrangement as required under Sec. 4.171(a)(4), are not normally considered "bona fide" plans or equivalent benefits for purposes of the Act.

(2) A contractor may request approval by the Administrator of an unfunded self-insured plan in order to allow credit for payments under the plan to meet the fringe benefit requirements of the Act. In considering whether such a plan is bona fide, the Administrator will consider such factors as whether it could be reasonably anticipated to provide the prescribed benefits, whether it represents a legally enforceable commitment to provide such benefits, whether it is carried out under a financially responsible program, and whether the plan has been communicated to the employees in writing. The Administrator in his/her discretion may

direct that assets be set aside and preserved in an escrow account or that other protections be afforded to meet the plan's future obligation.

(c) No benefit required by any other Federal law or by any State or local law, such as unemployment compensation, workers' compensation, or social security, is a fringe benefit for purposes of the Act.

(d) The furnishing to an employee of board, lodging, or other facilities under the circumstances described in Sec. 4.167, the cost or value of which is creditable toward the monetary wages specified under the Act, may not be used to offset any fringe benefit obligations, as such items and facilities are not fringe benefits or equivalent benefits for purposes of the Act.

(e) The furnishing of facilities which are primarily for the benefit or convenience of the contractor or the cost of which is properly a business expense of the contractor is not the furnishing of a "bona fide" fringe benefit or equivalent benefit or the payment of wages. This would be true of such items, for example, as relocation expenses, travel and transportation expenses incident to employment, incentive or suggestion awards, and recruitment bonuses, as well as tools and other materials and services incidental to the employer's performance of the contract and the carrying on of his business, and the cost of furnishing, laundering, and maintaining uniforms and/or related apparel or equipment where employees are required by the contractor, by the contractor's Government contract, by law, or by the nature of the work to wear such items. See also Sec. 4.168.

(f) Contributions by contractors for such items as social functions or parties for employees, flowers, cards, or gifts on employee birthdays, anniversaries, etc. (sunshine funds), employee rest or recreation rooms, paid coffee breaks, magazine subscriptions, and professional association or club dues, may not be used to offset any wages or fringe benefits specified in the contract, as such items are not ``bona fide" wages or fringe benefits or equivalent benefits for purposes of the Act.

EXHIBIT "B"

CERTIFICATE FROM CONTRACTOR APPOINTING OFFICER OR EMPLOYEE TO SUPERVISE PAYMENT OF EMPLOYEES

Project Name _____

_____

Project WBS#:_____Date_____

(I) (We) hereby certify that (I am) (we are) the **Prime Contractor** for _____

_____
(specify type of job)

in connection with construction of the above-mentioned Project, and that (I) (we) have appointed_____, whose signature appears below, to supervise the payment of (my) (our) employees beginning_____, 20___; that he/she is in a position to have full knowledge of the facts set forth in the payroll documents and in the statement of compliance required by the Copeland Act and the City of Houston, which he/she is to execute with (my) (our) full authority and approval until such time as (I) (we) submit to the City of Houston a new certificate appointing some other person for the purposes hereinabove stated.

_____ Phone:_____
(Identifying Signature of Appointee)

Attest: _____
(Name of Firm or Corporation)

By:_____ By:_____
(Signature) (Signature)

_____ _____
(Title) (Title)

NOTE: This certificate must be executed by an authorized officer of a corporation or by a member of a partnership, and shall be executed prior to and be submitted with the first payroll. Should the appointee be changed, a new certificate must accompany the first payroll for which the new appointee executes a statement of compliance required by the Copeland Act and the City of Houston.

EXHIBIT "C"

CERTIFICATE FROM SUBCONTRACTOR APPOINTING OFFICER OR EMPLOYEE TO SUPERVISE PAYMENT OF EMPLOYEES

Project Name _____

_____

Project WBS#:_____Date_____

(I) (We) hereby certify that (I am) (we are) the **Sub Contractor** for _____

_____
(specify type of job)

in connection with construction of the above-mentioned Project, and that (I) (we) have appointed_____, whose signature appears below, to supervise the payment of (my) (our) employees beginning_____, 20___; that he/she is in a position to have full knowledge of the facts set forth in the payroll documents and in the statement of compliance required by the Copeland Act and the City of Houston, which he/she is to execute with (my) (our) full authority and approval until such time as (I) (we) submit to the City of Houston a new certificate appointing some other person for the purposes hereinabove stated.

_____ Phone:_____
(Identifying Signature of Appointee)

Attest: _____
(Name of Firm or Corporation)

By:_____ By:_____
(Signature) (Signature)

_____ _____
(Title) (Title)

NOTE: This certificate must be executed by an authorized officer of a corporation or by a member of a partnership, and shall be executed prior to and be submitted with the first payroll. Should the appointee be changed, a new certificate must accompany the first payroll for which the new appointee executes a statement of compliance required by the Copeland Act and the City of Houston.

END OF DOCUMENT

Document 00830

TRENCH SAFETY GEOTECHNICAL INFORMATION

1.0 DOCUMENT INCLUDES

A. Trench Safety Geotechnical Information: Geotechnical information obtained for use in design of the trench safety system is included as an attachment to this document.

2.0 RELATED DOCUMENTS

A. Section 02260 - Trench Safety Systems.

END OF DOCUMENT

City of Houston
Pay or Play Program Requirements

I. Pay or Play Program Overview

A. Purpose

The Pay or Play Program was established with Ordinance 2007-534 on July 1, 2007 and is governed by Executive Order 1-7. The Pay or Play Program (POP Program) creates a more level playing field and enhances fairness in the bid process between competing contractors that choose to offer health benefits to their workforce and those who do not. The program also recognizes and accounts for the fact that there are cost associated with health care of the uninsured citizens of the Houston and Harris County area.

B. Program Elements

1. <u>Covered contracts</u>:

I.) Advertised after July 1, 2007 or which is executed on or after the effective date of this Executive Order.
II.) Contracts valued at or above $100,000.00 (contract) and $200,000.00 (sub-contract) including contingencies, amendments, supplemental terms and/or change orders.
III.) Professional Service, Construction, and Service type contracts.

2. <u>Contracts not covered</u>:

I.) Any contract in which the primary purpose is procurement of property, goods, supplies, and or equipment.
II.) An inter-governmental contract, inter-governmental agreement or purchasing cooperative.

3. <u>Covered employees</u>: This program applies to employees of a covered contractor or subcontractor, including contract labor, who are over age 18, work at least 30 hours per week <u>and</u> work any amount of time under a covered city contract or subcontract.

4. <u>Pay or Play Option</u>:

I.) "Pays" by contributing $1.00 per covered employee per regular hour for work performed under the contract with the City; or
II.) "Plays" by providing health benefits to covered employees. Health benefits must meet or exceed the following standards:

- The **employer will contribute no less than $150 per covered employee per month** toward the total premium cost.
- The **employee contribution, if any amount, will be no greater than 50% of the monthly premium cost and no more than $150 per month.**

Note: (1)A contractor is deemed to have complied with section 5.4 of E.O. 1-7 with respect to a covered employee who is not provided health benefits if the employee refuses the benefits and the employee's contribution to the premium is no more than $40 per month. (2) If applicable the contractor has the option to both Pay and Play.

5. **Exemptions/Waivers:** The City of Houston will award a contract to a contractor that neither Pays nor Plays only if the contractor has received an approved waiver (Form POP-4 requested by City departments only).

6. **Administration**: Contractor performance in meeting Pay or Play program requirements will be managed by the contracting department. The Office of Business Opportunity (OBO) has administrative oversight of the program, including audit responsibilities (department compliance). Questions about the program should be referred to the Department POP Liaison an updated contact list is available on http://www.houstontx.gov/obo/popforms.html or call Gracie Orr with the Office of Business Opportunity at 832-393-0633.

II. Documentation and Reporting Requirements

A. Document that must be signed and returned to administering department with the bid/proposal.

1.) City of Houston Pay or Play Program Acknowledgment Form (Form POP-1) acknowledges bidder/proposers' knowledge of the program and its requirements, and the intention to comply.

B. Documents that must be signed and returned to administering department within a period designated by the department's Contract Administrator, upon notification of low bidder or successful proposer status:

1.) Certification of Compliance with Pay or Play Program (Form POP-2)

Note - Contractors that opt to "play" must provide proof of coverage, including document from insurance provider, and names of covered employees.

2.) List of Subcontractors (Form POP-3)

Note- Review the affidavit statement at the bottom of this form for further important POP Compliance information.

C. Contractors reporting requirements:

1.) Contractors that opt to Pay
Provide monthly reports to administering department, detailing names of employees, hours worked, exemptions (if any) and amount owed. (Form POP-5)

2.) Contractors that opt to Play
Provide periodic reports to the contract administrator showing proof of coverage (insurance premium invoice or insurance card) reporting schedule will be determined by administering department based on length of contract. (Form POP-7)

3.) Employee Waiver Request
Contractor may request POP program waiver by submitting the request on POP-8 if the employee is less than 18 years old, employee has other health coverage such as through spouse or parents, or Medicare/Medicaid.

Note proof of coverage must be provided in the form of a copy of the employee's insurance card. (Remove social security numbers if applicable)

4.) Contractors shall submit an initial report with the second invoice to the department. Payments based on monthly reports are due to the contracting department with submission of the following month's invoice. Payments may be made out to the City of Houston preferably via cashier check or business check.

III. Compliance and Enforcement

The Office of Business Opportunity will audit program compliance. Contractors willfully violating or misrepresenting POP program compliance will be subject to corrective and/or punitive action, including but not limited to the assessment of fines and penalties and/or debarment. The Pay or Play Program Requirements Form and all other POP Forms are available for downloading from the City of Houston's Website at http://www.houstontx.gov/obo/popforms.html

SECTION 01110

SUMMARY OF WORK

PART 1 GENERAL

1.01 SECTION INCLUDES

A. Summary of the Work including work by the City, City-furnished Products, work sequence, future work, Contractor use of Premises, special conditions for substantial completion and City occupancy.

1.02 WORK COVERED BY CONTRACT DOCUMENTS

A. Work of the Contract is for the construction of various improvements including replacement of pumps, motors, valves, and buildings at the following water plant facilities:

District 111 #2	10301 Sun City Court, Houston, TX
Park Ten Central	1300 Langham Creek, Houston, TX
Sharpstown #1	6910 Bintliff, Houston, TX
West Houston #3	14925 South Richmond, Houston, TX

B. The project is a combination of various improvements inside existing pump buildings and within the site limits at four existing groundwater treatment plants and pumping facilities located in Houston, Texas.

C. Work of this Contract consists of, but not limited to, construction of the items listed below, shown on the drawings, and described in the Project Specification:

1. District 111 #2
   a. Replacement of the existing vertical turbine booster pumps, suction tanks and motors;
   b. Replacement of pump foundation and suction cans;
   c. Replacement of existing booster pump suction and discharge isolation valves, suction and discharge piping, check valves and air release valves on the pump discharge lines;
   d. Replacement of suction and discharge headers;
   e. Replacement of the existing TI-505 PLC with a Siemens S7-1513 and Siemens Comfort panel model TP1200.
   f. Remove existing control panel and provide new SCADA control panel with all accessories. Programming of new PLC to control and monitor

plant new modification.

g. Install new manual transfer switch and electrical service entrance.
h. Install two new plugs for portable generator connection.
i. Install new electromagnetic distribution flow meter. Provide programming at local HMI, EWPP HMI, Sabine HMI and Ardmore WebSpace HMI for associated flow meter.
j. Install new emergency stop switch at each pump.
k. Connect new conduits and conductors to existing water well and proposed booster pumps.
l. Associated demolition, site work, concrete pavement, and drainage improvements.

2. Park Ten Central
   a. Replacement of existing horizontal split case booster pumps and motors and concrete foundations;
   b. Replacement of the existing booster pump suction and discharge isolation valves, suction and discharge piping, and air release valves on the pump discharge lines;
   c. Demolition of the existing discharge headers and flow meters;
   d. Installation of a new precast concrete building with cast-in place concrete foundation to house new electrical and control equipment.
   e. Demolition of existing motor control centers.
   f. Demolition of existing service entrance.
   g. Demolition of existing well motor control center.
   h. Connect new conduits and conductors to existing water wells and proposed booster pumps.
   i. Installation of Siemens S7-1513 and Siemens HMI IPC477D panel PC.
   j. Provide and install new mini-power center in existing pump building.
   k. Provide and field install conduits and conductors from proposed mini-power center to existing equipment in existing pump building.
   l. Install new SCADA control panel with all accessories. Programming of new PLC to control and monitor plant new modification.
   m. Installation of a new CenterPoint Energy pad mounted transformer and transformer access road to replace the existing overhead transformer bank;
   n. Replace two existing flow transmitters with two new Krohn IFC 300. Field install signal conduits and wires to existing PLC. Provide programming at local HMI, EWPP HMI, Sabine HMI and Ardmore WebSpace HMI for associated flow meters.
   o. Associated demolition, site work, concrete pavement, and drainage improvements.

3. Sharpstown #1
   a. Demolition and disposal of the existing pump station building including existing pumps, valves, piping and fittings, and electrical and control equipment;
   b. Demolition and disposal of the existing incinerator restroom.
   c. Installation of a new precast concrete building with cast-in place concrete foundation to house new booster pumps, electrical and control equipment, and chlorine feed equipment;
   d. Installation of new horizontal split case pumps, manual isolation valves, associated suction and discharge piping, new connection to groundwater storage tank, supports, electrical and control equipment, and chlorine feed equipment;
   e. Installation of new distribution flow meter with associated piping, pipe supports, and associated electrical and control equipment.
   f. Installation of a new CenterPoint Energy pad mounted transformer.
   g. Installation of a new City of Houston pad mounted transformer.
   h. Provide and install new site lights on concrete poles.
   i. Connect new conduits and conductors to existing water wells.
   j. Provide and install SCADA control panel with Siemens S7-1513 PLC and Siemens Comfort panel model TP1200.
   k. Programming of new Siemens S7-1513 PLC to control and monitor plant new modification.
   l. Associated demolition, site work, concrete pavement, detention pond, and drainage improvements.

4. West Houston #3
   a. Replacement of the existing vertical turbine booster pumps, suction tanks and motors;
   b. Replacement of existing booster pump suction and discharge isolation valves, suction and discharge piping, and air release valves on the pump discharge lines;
   c. Replacement of existing strap-on flow meter with new strap on flow meter;
   d. Replace existing light fixtures in electrical room and pump room.
   e. Installation of a new precast concrete building with cast-in place concrete foundation to house Liquid Ammonium Sulfate (LAS) feed equipment;
   f. Installation of new LAS feed equipment and LAS storage containment area;
   g. Installation of new chlorine solution injection vault and new LAS solution injection vault;
   h. Relocation and modification of existing restroom;
   i. Installation of 8-inch sanitary sewer line for restroom;
   j. Replacement of the existing electrical equipment including

automatic transfer switch and water well motor starters with new manual transfer switch and new water well motor starters.

k. The existing overhead transformer bank will be removed by CenterPoint Energy.
l. Provide and install 1200A service rated main circuit breaker.
m. Provide and install two new plugs for portable generator connection.
j. Replacement of the existing TI-505 PLC with a Siemens S7-1513 and Siemens Comfort panel model TP1200.
k. Provide and install mini-power center.
l. Provide and field install conduits and conductors from proposed mini-power center to proposed equipment in LAS pump building.
m. Programming of new PLC to control and monitor plant new modification.
n. Installation of a new CenterPoint Energy pad mounted transformer to replace the existing overhead transformer bank;
o. Associated demolition, site work, concrete pavement, and drainage improvements;
p. Replace existing strap on flow meter with new strap on flow meter;
q. Replace existing light fixtures in electrical room and pump room.

1.03 DEFINITIONS

A. Large Diameter Water Lines: Water lines 24-inches in diameter and larger. References to large diameter water lines shall apply to pipe, valves and appurtenances 24-inch and larger.

B. Small Diameter Water Lines: Water lines 20-inches in diameter and smaller. References to small diameter water lines shall apply to pipe, valves and appurtenances 20-inch and smaller.

1.04 WORK SEQUENCE AND LIMITATIONS

A. District 111 #2

1. The facility may be shut down during winter months (mid October – mid May). All other times the facility shall remain fully operational during construction without interruptions for more than two hours at a time;
2. Contractor shall provide written notice to the Project Manager and the City Drinking Water Operations (DWO) seven (7) calendar days prior to requested day and time of each interruption;
3. Contractor shall provide written notice to the Project Manager and the City DWO forty eight (48) hours, not including holidays and weekends, prior to requested day and time of taking each pump out of service;
4. All booster pump work with associated piping, structural, electrical and control work shall be completed sequentially. No more than one pump at

a time can be taken out of service when plant is in operation;

B. Park Ten Central

1. The facility may be shut down during winter months (mid October – mid May), provided Park Ten East and West Towers are both in service. All other times the facility shall remain fully operational during construction without interruptions for more than two hours at a time;
2. Contractor shall provide written notice to the Project Manager and the City DWO seven (7) calendar days prior to requested day and time of each interruption;
3. Electrical building with associated electrical equipment and electrical feeders to the new pumps shall be fully completed prior to taking pumps out of service for replacement;
4. All booster pump work with associated piping, structural, electrical and control work shall be completed sequentially. No more than one pump at a time can be taken out of service when plant is in operation;
5. Contractor shall provide written notice to the Project Manager and the City DWO forty eight (48) hours, not including holidays and weekends, prior to requested day and time of taking each pump out of service;

C. Sharpstown #1

1. The facility can be taken out of service for completion of all work, provided the surrounding water plants are in full operation.
2. Contractor shall provide written notice to the Project Manager and the City DWO fourteen (14) calendar days prior to requested day of taking facility out of service;
3. Contractor shall coordinate with the Project Manager and the City DWO for closing all required distribution system isolation valves.

D. West Houston #3

1. The facility can be taken out of service for completion of all work, provided the surrounding water plants are in full operation.
2. Contractor shall provide written notice to the Project Manager and the City DWO seven (7) calendar days prior to requested day and time of each interruption;
3. Associated electrical equipment and electrical feeders to the new pumps shall be fully completed prior to taking pumps out of service for replacement;
4. All booster pump work with associated piping, structural, electrical and control work shall be completed sequentially. No more than one pump at a time can be taken out of service when plant is in operation;
5. Contractor shall provide written notice to the Project Manager and the City DWO forty eight (48) hours, not including holidays and weekends, prior to requested day and time of taking each pump out of service;

1.05 COORDINATION OF WORK

A. Schedule construction operations with City Project Manager and Drinking Water Operations (DWO) Infrastructure Group. Coordinate DWO's Infrastructure Group a minimum of 48 hours prior to beginning construction.

B. Refer to Section 01312 - Coordination and Meetings for general coordination.

C. Refer to Paragraph 1.04 for site specific coordination and work sequence requirements.

D. City may occupy sites and existing and adjacent buildings during entire construction period. Cooperate with City during construction operations to minimize interference with City's daily operations. Maintain existing exits unless otherwise indicated.

1.06 CASH ALLOWANCES

A. Include the following specific Cash Allowances in Contract Price under provision of General Conditions Paragraph 3.11:

1. Center Point Energy Electrical Service
2. Building Permit Fees

1.07 INCENTIVE ALLOWANCES – Not Used

1.08 CITY-FURNISHED PRODUCTS – Not Used

1.09 CONTRACTOR USE OF PREMISES

A. Comply with procedures for access to the site and Contractor's use of rights-of-way as specified in Section 01145 - Use of Premises.

B. Construction Operations: Limited to the City's rights-of-way provided by the City and areas shown or described in the Contract documents.

C. Utility Outages and Shutdown: Provide a minimum of 48 hour notice to the City and private utility companies (when applicable), excluding weekends and holidays, in advance of required utility shutdown. Coordinate all work as required.

1.10 STREET CUT ORDINANCE

A. Excavations on or under pavement in the City's right-of-way must have a permit. Comply with City of Houston, Texas Ordinance No. 2000-1115, an ordinance amending Chapter 40 of the Code of Ordinances, Houston, Texas, relating to excavating in the Public right-of-way.

B. Comply with the latest edition of street cut New Pavement Repair and Pavement Replacement details.

C. Quantities are included for street cut pavement repair and replacement in applicable Specification sections for Unit Price contracts.

D. Include payment for street cut pavement repair and replacement in lump sum bid for Stipulated Price contracts.

1.11 WARRANTY

A. Comply with warranty requirements in accordance with Document 00700 - General Conditions.

1.12 INTERPRETATION OF CONFLICTS

A. Should conflict occur in Contact Documents, request interpretation before proceeding with Work. Such requests shall first be preceded by diligent investigation into Contact Documents. Contain evidence of such investigation in requests for interpretation.

1.13 GENERAL CONSTRUCTION NOTES

A. Notify the Utility Coordinating Committee at 1-800-669-8344 or (713) 223-4567, and the City of Houston Department of Public Works and Engineering, Civil Construction at 832-395-2090 at least 72 hours prior to commencement of work.

B. Field verify existing facilities shown on the drawings by whatever means necessary (metal detection. probes, excavation, survey, others) prior to excavation for proposed utilities. Field verification work shall be completed prior excavation for proposed utilities. No separate pay item.

C. These plans and the surveys upon which they are based are tied into the official City of Houston survey system in compliance with ordinance No. 69-1978. City of Houston survey markers and monuments referenced have been included in this plan set.

D. Comply with OSHA Regulations and State of Texas laws concerning

excavation, trenching and shoring as specified in City of Houston Ordinance No. 87-1457.

E. Conduct construction operations under this contact in conformance with the erosion control practices described in Document 01410 "TPDES Requirements" and Document 01570 "Storm Water Pollution Control" and Storm Water Pollution Prevention Plans included in the construction drawings. Work identified in this project falls under Large Construction Activity with area disturbed to be on or more acres but less than five acres. TPDES requirements applicable to Large Construction Activity will apply.

F. Any pavement (such as wheel chair ramps, pavement curbs, sidewalks, driveways, bikeways, etc.), fences, gates, lawns, irrigation utilities, landscapes, culverts, inlets, manholes, signs or mail boxes and other improvements that have been disturbed due to utility construction shall be replaced with same quality material and condition, according to City of Houston standard specifications. Contractors are required to bid accordingly.

1.14 EXISTING UTILITIES

A. Underground utilities existing in the vicinity of this project. While every effort has been made to show locations for existing utilities, they are approximate and other utilities may exist in the vicinity of this project, which are not shown on these plans. The location and grades of existing utilities are based on as-built information.

B. Public and private utility lines may exist that are not shown on the construction drawings. Locate, maintain and protect the integrity of these lines. Hand excavation may be required.

C. Coordinate with the proper utility company to relocate or divert any utility in conflict with proposed construction so as not to disrupt service of same. Restore relocated or diverted utility to its original condition and location upon completion of construction.

1.15 WATER LINES

A. Water lines shall be constructed in accordance with current City of Houston specifications for large and small diameter water lines.

B. All utilities present on these drawings are shown at approximate locations based on the best available information. The contractor shall field determine the exact locations prior to commencing construction. The contractor shall be fully responsible for any and all damages caused by failure to exactly locate and

maintain these underground utilities, at no additional cost to the City of Houston.

1.16 STORM SEWERS

A. Adequate drainage shall be maintained at all times during construction. Any drainage ditch or structure disturbed during construction shall be restores to the satisfaction of the owning authority. All construction storm runoff shall comply with the final draft of the Storm Water Management Handbook for construction activities, as prepared by Harris County, HCFCD and the City of Houston in compliance with NPDES requirements.

B. Contractor shall be responsible for removal of siltation in existing and proposed storm sewer systems (if necessary) that result from construction activities associated with this project.

1.17 SANITARY SEWERS

A. The contractor is fully responsible for damages to existing sanitary sewer facilities as a result of this project. Sanitary sewers shall be constructed in compliance with the latest city specifications for sewer construction, and tested as specified in the city test procedure for either liquid or air, including all amendments and revisions thereto. Embedment and backfill for sanitary sewers shall be placed in accordance with City of Houston standard drawing unless otherwise noted.

B. Maintain service to all sewers during construction. Contractor is responsible for locating all sanitary sewer service laterals affected by construction.

1.18 STORM WATER POLLUTION PREVENTION PLAN

A. The Storm Water Pollution Prevention Plan for this project is governed by Specification Sections 01410, 01570 and 01575 and the layouts provided in the construction drawings. Contractor shall comply with Storm Water Pollution Prevention Plan requirements as detailed in the construction documents. There is no separate cost or cash allowance for Storm Water Pollution Prevention Plan implementation and maintenance/clean-up. Cost shall be incidental to unit price for filter fabric fence, inlet protection barrier, reinforced filter fabric barrier and stabilized construction exist bid items.

1.19 ADDITIONAL CONDITIONS FOR SUBSTANTIAL COMPLETION

A. In addition to requirements outlined in Document 00700 – General Conditions,

for Contractor to be substantially complete with the Work and call for inspection by Project Manager to confirm, the following conditions must be met or completed:

1. Demonstrate the ability to receive and monitor video and Supervisory Control and Data Acquisition (SCADA) data from all remote sites (ground water plants, pressure points, fire stations, etc.).

2. All SCADA and security equipment shall be installed, accepted by manufacturer's representative, and witnessed and approved by the City's SCADA Electrical and Instrumentation and Drinking Water Operations prior to approval by Project Manager. The contractor will schedule SCADA, Electrical and Instrumentation testing with the owner to begin a minimum of four weeks prior to Substantial Completion.

3. All testing shall be completed and accepted by Project Manager.

4. Draft O&M manuals shall be delivered to Project Manager.

5. Training shall be conducted, utilizing draft O&M manuals.

6. *All Safety related work including pavement stripping, signing and signalization*

    a. All safety-related systems and equipment shall be installed, accepted by manufacturer's representative and approved for use.

7. *All pay items complete report.*

8. *Contractor shall contact Construction Project Manager to complete Texas Department of Licensing and Regulation Post Construction Inspection of pedestrian elements for Texas Accessibility Standards. All permit and fees associated with TDLR inspection shall be paid by the contractor."*

9. Contractor must provide asset information in the attached spreadsheet for all assets purchased as a single line item costing $500 or more. Each plant's information will be submitted in a separate copy of the spreadsheet. The spreadsheets will be used to update the records in the Infor database to reflect equipment in the plants.

B. No additional conditions described in Paragraph 1.10 may be included in Contractor's punch list.

1.20 SOIL CONDITIONS & ENVIRONMENTAL SITE ASSESSMENTS (ESA)

A. A soils report was prepared for District 111 #2, Park Ten Central, Sharpstown #1, and West Houston #3 water plants. Bidder(s) must consider the soil conditions provided in the Geotechnical Report. This report is been provided on a CD, which is attached to the Project Manual.

B. Environmental site assessments were not conducted for the project sites.

C. Limited Asbestos and Lead Surveys were prepared for District 111 #2, Park Ten Central, Sharpstown #1, and West Houston #3 sites. Bidder(s) must consider the findings of these reports, which are being provided on a CD that is attached to the Project Manual.

1.21 SAFETY SYSTEMS

A. The plans and any attendant drawings (including shop drawings, as built drawings or record drawings), addenda, change orders and specifications, prepared by Klotz Associates and its subconsultants do not extend to or include designs or systems pertaining to the safety of the construction contractor or its employees, agents, or representatives in their performance of the work. The seals of registered professional engineer(s) and architect(s) from Klotz Associates, Kalluri Group, Inc., KIT Professionals, Inc., Moreno Engineering, Inc., depicted hereon do not extend to any such safety systems that may now or hereafter be incorporated in these plans. The construction contractor shall prepare or obtain the appropriate safety systems, including the plans and specifications required by House Bill 662 and 665 enacted by the Texas Legislature.

1.22 CENTERPOINT ENERGY ELECTRICAL FACILITIES

A. Overhead lines may exist on property. All lines should be located prior to construction. Texas law, section 752, health & safety code, forbids all activities in which personas or equipment may come within six (6) feet of live overhead high voltage lines. Parties responsible for work, including contractors, are legally responsible for the safety of construction workers under this law. This law carries both criminal and civil liability. To arrange for lines to be turned off or removed call CenterPoint Energy at (713) 207-2222.

B. Location of CenterPoint Energy electrical facilities, are approximate and have not been verified by actual field check.

C. Hand dig within one (1) foot of CenterPoint Energy underground electrical facilities.

D. Overhead lines exist on and adjacent to the project sites, which may be live during the construction period. Facilitate work so as not to interrupt services unless permitted by CenterPoint Energy.

E. Exercise caution when working in the vicinity of CenterPoint Energy electrical cable, underground wiring and overhead lines.

F. When excavation within 5 feet and beneath a depth of 3 feet below existing grade of a utility pole or anchor to which CenterPoint Energy facilities are attached, CenterPoint Energy will secure or brace these poles and anchor prior to excavation. The cost of CenterPoint Energy's efforts is incidental. "No separate pay item".

1.23 CENTERPOINT ENERGY UNDERGROUND GAS FACILITIES

A. Locations of CenterPoint Energy main lines (to include Unit Gas Transmission and/or Industrial Gas Supply Corporation where applicable) are shown in an approximate location only. Service lines are not usually shown. The contractor shall contact the Utility Coordinating Committee at (713) 223-4567 or 1-800-669-8344 a minimum of 48 hours prior to construction to have main and service lines field located.

B. When CenterPoint Energy pipeline markings are not visible, call (713) 967-8037 (7:00 am to 4:30 pm) for status of line location request before excavation begins.

C. When excavating within eighteen inches (18") of the indicated location of CenterPoint Energy facilities, all excavation must be accomplished using non-mechanical excavation procedures.

D. When CenterPoint Energy facilities are exposed, sufficient support must be provided to the facilities to prevent excessive stress on the piping.

E. The contractor is fully responsible for any damages caused by his failure to exactly locate and preserve these underground facilities.

F. All gas facilities are the property of CenterPoint Energy, unless otherwise noted.

1.24 AT&T TEXAS (TELEPHONE FACILITIES)

A. The locations of AT&T Texas utilities are shown in an approximate way only. The contractor shall determine the exact location before commencing work. He agrees to be fully responsible for any damages and all damages, which might be

occasioned by his failure to exactly locate and preserve these underground utilities.

B. Call 1-800-344-8377 a minimum of 48 hours prior to construction to have underground lines field located.

C. When excavation within eighteen inches (18") of an indicated location of AT&T facilities, all excavations must be accomplished by using non-mechanized excavation procedures. When boring, the contractor shall expose AT&T facilities.

D. When AT&T facilities are exposed, the contractor will provide support to prevent damage to the conduit ducts or cables. When excavating near telephone poles, the contractor shall brace the pole for support.

1.25 TREE PROTECTION

A. Notify City of Houston Parks and Recreation Department representative Mr. Victor Cordova, City Forester, at 832-395-8454, at least two (2) weeks in advance of clearing cutting or pruning any tree.

B. Adhere to the requirements of Specification Section 01562 – Tree and Plant Protection. Protect any existing trees, landscaping, and sprinkler systems. Repair damaged sprinkler systems and replace damaged landscaping to original condition or better. No separate payment.

C. Live trees removed must be replaced with equivalent size in inches or with multiple trees whose cumulative size equates to the size of the tree being replaced. Tree replacement includes cost of new tree, installation, watering and warranty per Specification Section 02915, at no additional cost.

1.26 SALVAGED EQUIPMENT

A. Contractor shall carefully remove and salvage the following items during construction:

1. Actuators;
2. Blind flanges;
3. Electrical equipment; and
4. SCADA equipment
5. Diesel Fuel Tanks

B. The City of Houston reserves First Right of Salvage.

C. Salvaged items must be delivered to Drinking Water Operations. Contractor shall coordinate with DWO to determine delivery location, which should be with the requirements of the individual specification sections:

1.27 EQUIPMENT TRAINING

A. Contractor shall provide training for the following equipment in accordance with the requirements of the individual specification sections:

1. Vertical Turbine Pumps;
2. Horizontal Centrifugal Pump; and
3. SCADA and Controls equipment per Instrumentation and Control General Provisions.

B. Training shall include classroom instruction and field operation and maintenance instruction with the O&M manual(s) and other materials, slides, videos and handouts.

C. Training shall be performed at each site upon completion of the installation and testing of the equipment per specification section requirements.

1.28 PROJECT RECORD DOCUMENTS

A. Prepare as-built horizontal and vertical locations of proposed yard piping and utilities. In addition, include any existing utilities encountered during construction in the as-built drawings. Data is to be provided to Project Manager. See Document 01785 for additional requirements.

1.29 PROJECT SIGN

A. Project sign detail included in Contract Drawings is the latest City of Houston standard but does not reference the latest Council Members. Contractor shall ensure latest names and Council Districts are represented on the signs.

PART 2 PRODUCTS - Not Used

PART 3 EXECUTION - Not Used

END OF SECTION

Section 01145

USE OF PREMISES

1.01 SECTION INCLUDES

A. General use of the site including properties inside and outside of rights-of-way, work affecting road, ramps, streets and driveways and notification to adjacent occupants.

1.02 RIGHTS-OF-WAY

A. Confine access, and operations and storage areas to rights-of-way provided by the City as stipulated in Document 00700 - General Conditions; trespassing on abutting lands or other lands in the area is not allowed.

B. Make arrangements, at no cost to the City, for temporary use of private properties. Contractor and Surety shall indemnify and hold harmless the City against claims or demands arising from such use of properties outside of rights-of-way. Submit a copy of agreements between private property owners and Contractor prior to use of the area. Agreements between private property owners and Contractor shall be notarized or bear the signatures of two witnesses.

C. Obtain written permission from City of Houston Parks and Recreation Department for storage of materials on esplanades and other areas within rights-of-way under that department's jurisdiction. Submit copies of written permission prior to use of the area.

D. Restrict total length of distributed materials along the route of construction to 1,000 linear feet unless otherwise approved in writing by City Engineer.

1.03 PROPERTIES OUTSIDE OF RIGHTS-OF-WAY

A. Do not alter the condition of properties adjacent to and along rights-of-way.

B. Do not use ways, means, methods, techniques, sequences, or procedures that result in damage to properties or improvements.

C. Restore damaged properties outside of rights-of-ways at no cost to the city

1.04 USE OF SITE

A. Obtain approvals from governing authorities prior to impeding or closing public roads and streets. Do not close more than two consecutive intersections at one time.

B. Notify Project Manager and Public Works and Engineering Traffic Management Branch at least five working days prior to closing a street or street crossing. Obtain permits for street closures in advance.

C. Maintain 10-foot-wide minimum access lanes for emergency vehicles including access to fire hydrants.

D. Avoid obstructing drainage ditches or inlets. When obstruction is unavoidable due to requirements of the Work, provide grading and temporary drainage structures to maintain unimpeded flow.

E. Locate and protect private lawn sprinkler systems that may exist within the site. Repair or replace damaged systems to condition existing at start of the Work, or better. Test irrigation system prior to construction.

F. Conform to daily clean-up requirements of Article 3 of Document 00700 - General Conditions.

G. Beware of overhead power lines existing in area and in close proximity of the Project. When 10 feet of clearance between energized overhead power line and construction-related activity cannot be maintained, request Center Point Energy (CPE) de-energize or move conflicting overhead power line. Contact CPE representatives at (713) 207-2222. Schedule, coordinate and pay costs associated with de-energizing or moving conflicting overhead power lines. When there is no separate pay item for this effort, include these costs in various items of bid that make such work necessary.

1.05 NOTIFICATION TO ADJACENT OCCUPANTS

A. Notify individual occupants in areas to be effected by the Work of proposed construction and time schedule. Notify not less than 72 hours or more than two weeks prior to work performed within 200 feet of homes or businesses. Follow form and content of sample door hanger provided by Project Manager.

B. Include in notification nature of the Work, and names and telephone numbers of two company representatives for resident contact available on 24-hour call.

C. Submit proposed notification to Project Manager for approval. Consider ethnicity of the neighborhood where English is not the dominant language. Provide notice in an understandable language.

1.06 PUBLIC, TEMPORARY, AND CONSTRUCTION ROADS AND RAMPS

A. Construct and maintain temporary detours, ramps, and roads to provide for normal public traffic flow when it is necessary to close public roads or streets.

B. Provide mats or other means to prevent overloading or damage to existing roadways from tracked equipment, large tandem axle trucks or equipment that will damage the existing roadway surfaces.

C. Construct and maintain access roads and parking areas as specified in Section 01504 - Temporary Facilities and Controls.

1.07 EXCAVATION IN STREETS AND DRIVEWAYS

A. Avoid hindering or inconveniencing public travel on streets or intersecting alleys for more than two blocks at any one time, except by permission of City Engineer.

B. Obtain Traffic Management Branch and City Engineer's approval when nature of the Work requires closure of an entire street. Permits required for street closure are Contractor's responsibility. Avoid unnecessary inconvenience to abutting property owners.

C. Remove surplus materials and debris and open each block for public use, as work in that block is complete.

D. Acceptance of any portion of the Work will not be based on return of street to public use.

E. Avoid obstructing driveways or entrances to private property.

F. Provide temporary crossings or complete excavation and backfill in one continuous operation to minimize duration of obstruction when excavation is required across drives or entrances.

G. Provide barricades and signs in accordance with Section VI of the State of Texas Manual on Uniform Traffic Control Devices.

1.08 TRAFFIC CONTROL

A. Comply with traffic regulation as specified in Section 01555 - Traffic Control and Regulation.

1.09 SURFACE RESTORATION

A. Restore the site including landscaping to the condition existing before construction, or better.

B. Repair paved areas per the requirements of Section 02951 - Pavement Repair and restoration.

C. Repair damaged turf areas, level with bank run sand conforming to Section 02317 - Excavation and Backfill for Utilities, or topsoil conforming to Section 02911 - Topsoil, and re-sod in accordance with Section 02922 - Sodding. Water and level newly sodded areas with adjoining turf using appropriate steel wheel rollers for sodding. Do not use spot sodding or sprigging.

1.10 LIMITS OF CONSTRUCTION

A. Confine operations to lands within construction work limits shown on Drawings. Unless otherwise noted on Drawings adhere to the following:

1. Where utility alignment is within esplanade, and construction limits are shown on Drawings to extend to edge of esplanade, keep equipment, materials, stockpiles a minimum of five feet from back of curb.

2. Where construction limits shown on Drawings extend to property line, keep sidewalks free of equipment, materials, and stockpiles.

1.11 EQUIPMENT AND MATERIAL SALVAGE

A. Upon completion of the Work, carefully remove salvageable equipment and material. Deliver them to City of Houston as directed by Project Manager. Dispose of equipment offsite at no additional cost to the City when Project Manager deems equipment unfit for further use.

PART 2 P R O D U C T S - Not Used

PART 3 E X E C U T I O N - Not Used

END OF SECTION

Section 01255

CHANGE ORDER PROCEDURES

PART 1 G E N E R A L

1.01 SECTION INCLUDES

A. Procedures for processing Change Orders, including:

1. Assignment of a responsible individual for approval and communication of changes in the Work;

2. Documentation of change in Contract Price and Contract Time;

3. Change procedures, using proposals and Modifications;

4. Execution of Change Orders;

5. Correlation of Contractor submittals.

1.02 REFERENCES

A. Blue Book is defined as the Rental Rate Blue Book for Construction Equipment (a.k.a. Data Quest Blue Book).

B. Rental Rate is defined as the full-unadjusted base rental rate for the appropriate item of construction equipment.

1.03 RESPONSIBLE INDIVIDUAL

A. Provide a letter indicating the name and address of the individual authorized to execute Modifications, and who will be responsible for informing others in Contractor's employ and Subcontractors of changes to the Work. Provide this information at the pre-construction meeting.

1.04 DOCUMENTATION OF CHANGE IN CONTRACT PRICE AND CONTRACT TIME

A. Maintain detailed records of changes in the Work. Provide full information required for identification and evaluation of proposed changes, and substantiate costs of changes in the Work.

B. Document each proposal for change in Contract Price or Contract Time with sufficient data to allow evaluation of proposal.

C. Include the following minimum information on proposals:

1. Quantities of items in original Document 00410 – Bid Form with additions, reductions, deletions, and substitutions.

2. Quantities and cost of items in original Schedule of Values with additions, reductions, deletions and substitutions.

3. Provide Unit Prices for new items, with supporting information, for inclusion in Schedule of Unit Price Work.

4. Justification for changes in Contract Time.

5. Additional data upon request.

D. For changes in the Work performed on a time-and-material basis, provide the following additional information:

1. Quantities and description of Products.

2. Taxes, insurance and Bonds.

3. Overhead and profit as noted in Document 00700 - General Conditions.

4. Dates, times and by who work was performed.

5. Time records and certified copies of applicable payrolls.

6. Invoices and receipts for Products, rental equipment, and subcontracts, similarly documented.

E. For changes in the Work performed on a time-and-materials basis, rental equipment is paid as follows:

1. Actual invoice cost for duration of time required to complete extra work without markup for overhead and profit. When extra work comprises only a portion of a rental invoice where equipment would otherwise be on site, compute hourly equipment rate by dividing the actual monthly invoice by 176. One day equals eight hours and one week equals 40 hours.

2. Do not exceed estimated operating costs given in Blue Book for items of equipment. Overhead and profit will be allowed on the operating cost.

F. For changes in the Work performed on a time-and-materials basis using Contractor-owned equipment, use Blue Book rates as follows:

1. Contractor-owned equipment will be paid at the Blue Book Rental Rate for the duration of time required to complete extra work without markup for overhead and profit. Utilize lowest cost combination of hourly, daily, weekly or monthly rates. Use 150 percent of Rental Rate for double shifts, one extra shift per day, and 200 percent of Rental Rate for more than two shifts per day. Standby rates shall be 50 percent of the appropriate Rental Rate shown in Blue Book. No other rate adjustments apply.

2. Do not exceed estimated operating costs given in Blue Book. Overhead and profit will be allowed on operating costs. Operating costs will not be allowed for equipment on standby.

1.05 CHANGE PROCEDURES

A. Changes to Contract Price or Contract Time can only be made by issuance of Document 00941 - Change Order. Issuance of Document 00940 - Work Change Directive will be formalized into a Change Order. Changes will be in accordance with requirements of Document 00700 - General Conditions.

B. City Engineer will advise of Minor Changes in the Work as authorized by the Document 00700 - General Conditions by issuing Document 00942 – Minor Change.

C. Request clarification of Drawings, Specifications, Contract documents or other information by using Document 00931- Request for Information. Response by Project Manager to Requests for Information does not authorize Contractor to perform tasks outside scope of the Work. Changes must be authorized as described in this Section.

1.06 PROPOSALS AND CONTRACT MODIFICATIONS

A. Project Manager may issue Document 00932- Request for Proposal, which includes a detailed description of the proposed change with supplementary or revised Drawings and Specifications. Project Manager may also request a proposal in response to a Request for Information. Prepare and submit the proposal within seven days or as specified in request.

B. Submit requests for Contract changes to City Engineer describing proposed change and its full effect on the Work, with a statement describing reason for change and effect on Contract Price and Contract Time including full documentation.

C. Design Consultant may review Change Orders.

1.07 WORK CHANGE DIRECTIVE

A. City Engineer may issue a signed Work Change Directive instructing Contractor to proceed with a change in the Work. Work Change Directive will subsequently be incorporated into a Change Order.

B. Work Change Directives will describe changes in the Work and designate the method of determining change in Contract Price or Contract Time.

C. Proceed promptly to execute changes in the Work in accordance with the Work Change Directive.

1.08 STIPULATED PRICE CHANGE ORDER

A. A Stipulated Price Change Order will be based on an accepted proposal.

1.09 UNIT PRICE CHANGE ORDER

A. Where Unit Prices for affected items of the Work are included in Document 00410 – Bid Form, the Change Order will be based on Unit Prices, subject to Articles 7 and 9 of Document 00700 - General Conditions.

B. Where Unit Prices of the Work are not pre-determined in Document 00410-Bid Form, the Work Change Directive or accepted proposal will specify the Unit Prices to be used.

1.10 TIME-AND-MATERIAL CHANGE ORDER

A. Provide itemized account and supporting data after completion of change, within time limits indicated for claims in Document 00700 - General Conditions.

B. City Engineer will determine the change allowable in Contract Price and Contract Time as provided in Document 00700 - General Conditions.

C. Maintain detailed records for work done on time-and-material basis as specified in Paragraph 1.04 above.

D. Provide full information required for evaluation of changes and substantiate costs for changes in the Work.

1.11 EXECUTION OF CHANGE DOCUMENTATION

A. City Engineer will issue Change Orders, Work Change Directives, or Minor Change in the Work for signatures of Parties as described in Document 00700 - General Conditions.

1.12 CORRELATION OF CONTRACTOR SUBMITTALS

A. For Stipulated Price Contracts, promptly revise Schedule of Values and Application for Payment forms to record authorized Change Orders as separate line item.

B. For Unit Price Contracts, the next monthly estimate of the Work after acceptance of a Change Order will be revised to include new items not previously included with appropriate Unit Prices.

C. Promptly revise progress schedules to reflect change in Contract Time, and to adjust time for other items of work affected by the change, and resubmit for review.

D. Promptly enter changes to on-site and record copies of Drawings, Specifications or Contract documents as required in Section 01785 - Project Record Documents.

PART 2 P R O D U C T S - Not Used

PART 3 E X E C U T I O N - Not Used

END OF SECTION

SECTION 01270S

MEASUREMENT AND PAYMENT

The following supplement modifies Section 01270 – Measurement and Payment. Where a portion of the Specification is modified or deleted by this Supplementary Specification, the unaltered portions of the Specification shall remain in effect.

Insert the following paragraph:

1.08 MEASUREMENT AND PAYMENT FOR PROJECT SPECIFIC ITEMS

A. District 111 #2

1. Bid Item 2 – "Storm Water Pollution Prevention Control Measures." Payment will be on a lump sum basis. Payment will include labor, equipment and materials necessary for installation of storm water pollution prevention control measures including but not limited to filter fabric fence, inlet protection barriers, and stabilized construction exit for complete installation as indicated on the Drawings and in the Specifications. The lump sum payment is in lieu of payment that may be indicated in the technical specification sections for individual work and equipment components.

2. Bid Item 3 – "Civil and Site Work including demolition, site grading and restoration." Payments will be on a lump sum basis. Payment will include labor, equipment and materials necessary for demolition, removal and disposal of existing pavement, and mechanical and electrical equipment and piping, site grading and site restoration as indicated on the Drawings and in the Specifications. The lump sum payment is in lieu of payment that may be indicated in the technical specification sections for individual work and equipment components.

3. Bid Item 4 – "Concrete Work." Payment will be on a lump sum basis. Payment will include labor, equipment and materials necessary for installation of reinforced concrete building and equipment foundations, concrete paving, concrete sidewalk, vapor barrier and select fill, and all other required materials as indicated on the Drawings and in the Specifications. The lump sum payment is in lieu of payment that may be indicated in the technical specification sections for individual work and equipment components.

4. Bid Item 7 – "Modifications to pump suction and discharge piping including pipe fittings, valves, accessories, pipe supports, disinfection and testing." Payment will be on a lump sum basis. Payment will include labor, equipment and materials necessary for modifications to pump suction and discharge piping including pipe fittings, valves accessories, pipe supports, coating for exposed piping, disinfection and testing for complete installation as indicated on the Drawings and in the Specifications. The

lump sum payment is in lieu of payment that may be indicated in the technical specification sections for individual work and equipment components.

5. Bid Item 8 – "Electrical, Instrumentation and Control Modifications." Payment will be on a lump sum basis. Payment will include labor, equipment and materials necessary for installation of electrical equipment and instrumentation for complete system, including programming and process control system integrator as indicated on the Drawings and in the Specifications. The lump sum payment is in lieu of payment that may be indicated in the technical specification sections for individual work and equipment components.

B. Park Ten Central

6. Bid Item 10 - "Storm Water Pollution Prevention Control Measures." Payment will be on a lump sum basis. Payment will include labor, equipment and materials necessary for installation of storm water pollution prevention control measures including but not limited to filter fabric fence, inlet protection barriers, and stabilized construction exit for complete installation as indicated on the Drawings and in the Specifications. The lump sum payment is in lieu of payment that may be indicated in the technical specification sections for individual work and equipment components.

7. Bid Item 11 – "Civil and Site Work including demolition, site grading and restoration." Payments will be on a lump sum basis. Payment will include labor, equipment and materials necessary for demolition, removal and disposal of existing pavement, and mechanical and electrical equipment and piping, site grading, ditches, swales, connection to existing storm structures, storm piping, inlets, detention pond and site restoration as indicated on the Drawings and in the Specifications. The lump sum payment is in lieu of payment that may be indicated in the technical specification sections for individual work and equipment components.

8. Bid Item 12 – "Concrete Work." Payment will be on a lump sum basis. Payment will include labor, equipment and materials necessary for installation of reinforced concrete building and equipment foundations, concrete paving, concrete sidewalk, vapor barrier and select fill, and all other required materials as indicated on the Drawings and in the Specifications. The lump sum payment is in lieu of payment that may be indicated in the technical specification sections for individual work and equipment components.

9. Bid Item 15 – "Modifications to pump suction and discharge piping including pipe fittings, valves, accessories, pipe supports, disinfection and testing." Payment will be on a lump sum basis. Payment will include labor, equipment and materials necessary for modifications to pump suction and discharge piping including pipe fittings, valves accessories, pipe supports, coating for exposed piping, disinfection and testing for complete installation as indicated on the Drawings and in the Specifications. The

lump sum payment is in lieu of payment that may be indicated in the technical specification sections for individual work and equipment components.

10. Bid Item 17 – "Electrical, Instrumentation and Control Modifications." Payment will be on a lump sum basis. Payment will include labor, equipment and materials necessary for installation of electrical equipment and instrumentation for complete system, including programming and process control system integrator as indicated on the Drawings and in the Specifications. The lump sum payment is in lieu of payment that may be indicated in the technical specification sections for individual work and equipment components.

11. Bid Item 18 – "HMI Node License." Payment will be on a lump sum basis. Payment will include labor, equipment, programming and materials necessary for installation of instrumentation equipment for complete system. The lump sum payment is in lieu of payment that may be indicated in the technical specification sections for individual work and equipment components.

C. Sharpstown #1

12. Bid Item 20 – "Storm Water Pollution Prevention Control Measures." Payment will be on a lump sum basis. Payment will include labor, equipment and materials necessary for installation of storm water pollution prevention control measures including but not limited to filter fabric fence, inlet protection barriers, and stabilized construction exit for complete installation as indicated on the Drawings and in the Specifications. The lump sum payment is in lieu of payment that may be indicated in the technical specification sections for individual work and equipment components.

13. Bid Item 21 – "Civil and Site Work including demolition, site grading and restoration." Payments will be on a lump sum basis. Payment will include labor, equipment and materials necessary for demolition, removal and disposal of existing pavement, and mechanical and electrical equipment and piping, site grading, ditches, swales, connection to existing storm structures, storm piping, inlets, detention pond, yard piping, and site restoration as indicated on the Drawings and in the Specifications. The lump sum payment is in lieu of payment that may be indicated in the technical specification sections for individual work and equipment components.

14. Bid Item 22 – "Concrete Work." Payment will be on a lump sum basis. Payment will include labor, equipment and materials necessary for installation of reinforced concrete building and equipment foundations, concrete paving, concrete sidewalk, vapor barrier and select fill, and all other required materials as indicated on the Drawings and in the Specifications. The lump sum payment is in lieu of payment that may be indicated in the technical specification sections for individual work and equipment components.

15. Bid Item 25 – "Modifications to pump suction and discharge piping including pipe fittings, valves, accessories, pipe supports, disinfection and testing." Payment will be on a lump sum basis. Payment will include labor, equipment and materials necessary for modifications to pump suction and discharge piping including pipe fittings, valves accessories, pipe supports, coating for exposed piping, disinfection and testing for complete installation as indicated on the Drawings and in the Specifications. The lump sum payment is in lieu of payment that may be indicated in the technical specification sections for individual work and equipment components.

16. Bid Item 29 – "Electrical, Instrumentation and Control Modifications." Payment will be on a lump sum basis. Payment will include labor, equipment and materials necessary for installation of electrical equipment and instrumentation for complete system, including programming and process control system integrator as indicated on the Drawings and in the Specifications. The lump sum payment is in lieu of payment that may be indicated in the technical specification sections for individual work and equipment components.

D. West Houston #3

17. Bid Item 31 – "Storm Water Pollution Prevention Control Measures." Payment will be on a lump sum basis. Payment will include labor, equipment and materials necessary for installation of storm water pollution prevention control measures including but not limited to filter fabric fence, inlet protection barriers, and stabilized construction exit for complete installation as indicated on the Drawings and in the Specifications. The lump sum payment is in lieu of payment that may be indicated in the technical specification sections for individual work and equipment components.

18. Bid Item 32 – "Civil and Site Work including but not limited to demolition, site grading and restoration." Payments will be on a lump sum basis. Payment will include labor, equipment and materials necessary for demolition, removal and disposal of existing pavement, and mechanical and electrical equipment and piping, site grading, ditches, swales, connection to existing storm structures, storm piping, inlets, detention pond, yard piping, and site restoration as indicated on the Drawings and in the Specifications. The lump sum payment is in lieu of payment that may be indicated in the technical specification sections for individual work and equipment components.

19. Bid Item 33 – "Concrete Work." Payment will be on a lump sum basis. Payment will include labor, equipment and materials necessary for installation of reinforced concrete building and equipment foundations, concrete vaults for chlorine and LAS injection, concrete paving, concrete sidewalk, vapor barrier and select fill, and all other required materials as indicated on the Drawings and in the Specifications. The lump sum payment is in lieu of payment that may be indicated in the technical specification sections for individual work and equipment components.

20. Bid Item 35 – "Modifications to pump suction and discharge piping including pipe fittings, valves, accessories, pipe supports, disinfection and testing." Payment will be on a lump sum basis. Payment will include labor, equipment and materials necessary for modifications to pump suction and discharge piping including pipe fittings, valves accessories, pipe supports, coating for exposed piping, disinfection and testing for complete installation as indicated on the Drawings and in the Specifications. The lump sum payment is in lieu of payment that may be indicated in the technical specification sections for individual work and equipment components.

21. Bid Item 36 – "LAS Feed System, including polyethylene storage tank, piping, fittings and accessories." Payment will be on a lump sum basis. Payment will include labor, equipment and materials necessary for complete installation and testing of the LAS feed system components, including polyethylene storage tank, booster pump, piping, valves, fittings, supports, controls, accessories, and tie-in connections as indicated on the Drawings and in the Specifications. The lump sum payment is in lieu of payment that may be indicated in the technical specification sections for individual work and equipment components.

22. Bid Item 38 – "Restroom Plumbing, Modification, and Relocation." Payment will be on a lump sum basis. Payment will include labor, equipment and materials necessary for relocation of the existing restroom facility, plumbing modifications for water supply, sanitary sewer pipe, connection to the sanitary sewer system, for complete installation as indicated on the Drawings and in the Specifications. The lump sum payment is in lieu of payment that may be indicated in the technical specification sections for individual work and equipment components.

23. Bid Item 39 – "Electrical, Instrumentation and Control Modifications." Payment will be on a lump sum basis. Payment will include labor, equipment and materials necessary for installation of electrical equipment and instrumentation for complete system, including programming and process control system integrator as indicated on the Drawings and in the Specifications. The lump sum payment is in lieu of payment that may be indicated in the technical specification sections for individual work and equipment components.

D. Extra Unit Price Table

24. Bid Item 43 – "Abatement and disposal of 1 mercury pressure switches. Includes abatement plan and regulatory reporting." Payment will be on a lump sum basis. Payment will include labor, equipment and materials necessary for the abatement and disposal of mercury pressure switches, including the abatement plan and regulatory reporting. The lump sum payment is in lieu of payment that may be indicated in the technical specification sections for individual work and equipment components.

END OF SECTION

Approved by:

9/2/15

Sonny Do, P.E.
Acting Assistant Director
Water Engineering Section
Engineering and Construction Division

Date

Section 01270

MEASUREMENT AND PAYMENT

PART 1 G E N E R A L

1.01 SECTION INCLUDES

A. Procedures for measurement and payment plus conditions for nonconformance assessment and nonpayment for rejected Products.

1.02 AUTHORITY

A. Measurement methods delineated in Specification sections are intended to complement criteria of this Section. In event of conflict, requirements of the Specification section shall govern.

B. Project Manager will take all measurements and compute quantities accordingly.

C. Assist by providing necessary equipment, workers, and survey personnel.

D. Measurement and Payment paragraphs are included only in those Specification sections of Division 01 where direct payment will be made. Include costs in the total bid price for those Specification sections in Division 01 that do not contain Measurement and Payment paragraphs,

1.03 UNIT QUANTITIES SPECIFIED

A. Quantity and measurement estimates stated in the Agreement are for contract purposes only. Quantities and measurements supplied or placed in the Work and verified by Project Manager will determine payment as stated in Article 9 of Document 00700 - General Conditions.

B. When actual work requires greater or lesser quantities than those quantities indicated in Document 00410 – Bid Form, provide required quantities at Unit Prices contracted, except as otherwise stated in Article 9 of Document 00700 - General Conditions.

1.04 MEASUREMENT OF QUANTITIES

A. Measurement by Weight: Reinforcing steel, rolled or formed steel or other metal shapes are measured by CRSI or AISC Manual of Steel Construction weights. Welded assemblies are measured by CRSI or AISC Manual of Steel Construction or scale weights.

B. Measurement by Volume:

1. Stockpiles: Measured by cubic dimension using mean length, width, and height or thickness.

2. Excavation and Embankment Materials: Measured by cubic dimension using average end area method.

C. Measurement by Area: Measured by square dimension using mean length and width or radius.

D. Linear Measurement: Measured by linear dimension, at item centerline or mean chord.

E. Stipulated Price Measurement: By unit designated in the Agreement.

F. Other: Items measured by weight, volume, area, or linear means or combination, as appropriate, as completed item or unit of the Work.

G. Measurement by Each: Measured by each instance or item provided.

H. Measurement by Lump Sum: Measure includes all associated work.

1.05 PAYMENT

A. Payment includes full compensation for all required supervision, labor, Products, tools, equipment, plant, transportation, services, and incidentals; and erection, application or Installation of an item of the Work; and Contractor's overhead and profit.

B. Total compensation for required Unit Price work shall be included in Unit Price bid in Document 00410 – Bid Form. Claims for payment as Unit Price work, but not specifically covered in the list of Unit Prices contained in Document 00410 – Bid Form, will not be accepted.

C. Interim payments for stored materials will be made only for materials to be incorporated under items covered in Unit Prices, unless disallowed in Document 00800 - Supplementary Conditions.

D. Progress payments will be based on Project Manager's observations and evaluations of quantities incorporated in the Work multiplied by Unit Price.

E. Final payment for work governed by Unit Prices will be made on the basis of actual measurements and quantities determined by Project Manager multiplied by the Unit Price for work which is incorporated in or made necessary by the Work.

1.06 NONCONFORMANCE ASSESSMENT

A. Remove and replace work, or portions of the Work, not conforming to the Contract documents.

B. When not practical to remove and replace work, City Engineer will direct one of the following remedies:

1. Nonconforming work will remain as is, but Unit Price will be adjusted lower at discretion of City Engineer.

2. Nonconforming work will be modified as authorized by City Engineer, and the Unit Price will be adjusted lower at the discretion of City Engineer, when modified work is deemed less suitable than specified.

C. Specification sections may modify the above remedies or may identify a specific formula or percentage price reduction.

D. Authority of City Engineer to assess nonconforming work and identify payment adjustment is final.

1.07 NONPAYMENT FOR REJECTED PRODUCTS

A. Payment will not be made for any of the following:

1. Products wasted or disposed of in an unacceptable manner.

2. Products determined as nonconforming before or after placement.

3. Products not completely unloaded from transporting vehicles.

4. Products placed beyond lines and levels of required work.

5. Products remaining on hand after completion of the Work, unless specified otherwise.

6. Loading, hauling, and disposing of rejected Products.

PART 2 P R O D U C T S - Not Used

PART 3 E X E C U T I O N - Not Used

END OF SECTION

Section 01292

SCHEDULE OF VALUES

PART 1 G E N E R A L

1.01 SECTION INCLUDES

A. Preparation and submittal of Schedule of Values for Stipulated Price Contracts or for Major Unit Price Work on Unit Price Contracts.

1.02 PREPARATION

A. For Stipulated Price Contracts, subdivide the Schedule of Values into logical portions of the Work, such as major work items or work in contiguous construction areas. Use Section 01325 - Construction Schedule as a guide to subdivision of work items. Directly correlate Items in the Schedule of Values with tasks in the Construction Schedule. Organize each portion using the Project Manual Table of Contents as an outline for listing value of the Work by Sections. A pro rata share of mobilization, Bonds, and insurance may be listed as separate items for each portion of the Work.

B. For Unit Price Contracts, items should include a proportional share of Contractor's overhead and profit so that total of all items will equal Contract Price.

C. For lump sum equipment items, where submittal of operation and maintenance data and testing are required, include separate items for equipment operation and maintenance data where:

1. submittal of maintenance data is valued at five percent of the lump sum amount for each equipment item and

2. submittal for testing and adjusting is valued at five percent of the lump sum amount for each equipment item.

Round off figures for each item listed to the nearest $100. Set the value of one item, when necessary, to make total of all values equal the Contract Price for Stipulated Price Contracts or the lump sum amount for Unit Price Work.

1.03 SUBMITTAL

A. Submit the Schedule of Values, in accordance with requirements of Section 01330 - Submittal Procedures, at least 10 days prior to processing of the first Certificate for Payment.

B Submit the Schedule of Values in an approved electronic spreadsheet file and an 81/2-inch by 11-inch print on white bond paper.

C. Revise Schedule of Values for items affected by Contract Modifications. After City Engineer has reviewed changes, resubmit at least 10 days prior to the next scheduled Certificate for Payment date.

PART 2 P R O D U C T S - Not Used

PART 3 E X E C U T I O N - Not Used

END OF SECTION

Section 01312

COORDINATION AND MEETINGS

PART 1 G E N E R A L

1.01 SECTION INCLUDES

A. General coordination including pre-construction meeting, site mobilization conference, and progress meetings.

1.02 COORDINATION OF DOCUMENTS

A. Coordination is required throughout documents. Refer to Contract documents and coordinate as necessary.

1.03 CONTRACTOR COORDINATION

A. Coordinate scheduling, submittals, and work of various Specification sections to assure efficient and orderly sequence of Installation of interdependent construction elements.

B. Coordinate completion and clean up of the Work prior to the Date of Substantial Completion and for portions of the Work designated for City's partial occupancy.

C. Coordinate access to the site for correction of nonconforming work to minimize disruption of the City's activities where the City is in partial occupancy.

1.04 PRE-CONSTRUCTION MEETING

A. Project Manager will schedule pre-construction meeting.

B. Attendance Required: City representatives, Design Consultant, special consultants as required by Project Manager, Contractor, and major Subcontractors and Suppliers.

C. Agenda:

1. Distribution of Contract documents.

2. Designation of personnel representing the Parties and Design Consultant.

3. Review of insurance.

4. Discussion of formats for Schedule of Values and Construction Schedule.

5. Procedures and processing of Shop Drawings, substitutions, pay estimates or Applications for Payment, Requests for Information, Requests for Proposal, Modifications, and the Contract closeout, other submittals.

6. Scheduling of the Work and coordination with other contractors.

7. Review of Subcontractors and Suppliers.

8. Appropriate agenda items listed for the site mobilization conference, Paragraph 1.05.C, when pre-construction meeting and site mobilization conference are combined.

9. Procedures for testing.

10. Procedures for maintaining record documents.

1.05 SITE MOBILIZATION CONFERENCE

A. When required by Contract documents, Project Manager will schedule a conference at the Project site prior to Contractor mobilization.

B. Attendance Required: City representatives, Design Consultant, special consultants, Superintendent, and major Subcontractors.

C. Agenda:

1. Use of premises by the City and Contractor.

2. Safety and first aid procedures.

3. Construction controls provided by the City.

4. Temporary utilities.

5. Survey and layout.

6. Security and housekeeping procedures.

7. Field office requirements.

1.06 PROGRESS MEETINGS

A. Hold meetings at Project field office or other location designated by Project Manager. Hold meetings at monthly intervals, or more frequently when directed by Project Manager.

B. Attendance Required: Superintendent, major Subcontractors and Suppliers, City representatives, Design Consultant and its subconsultants as appropriate for agenda topics for each meeting.

C. Project Manager will make arrangements for meetings, and for recording minutes.

D. Project Manager will prepare the agenda and preside at meetings.

E. Provide required information and be prepared to discuss each agenda item.

F. Agenda:

1. Review minutes of previous meetings.

2. Review of construction schedule, pay estimates, cash flow curve, payroll and compliance submittals.

3. Field observations, problems, and necessary decisions.

4. Identification of problems that impede planned progress.

5. Review of submittal schedule and status of submittals.

6. Review of RFI and RFP status.

7. Modification status.

8. Review of off-site fabrication and delivery schedules.

9. Maintenance of Construction Schedule.

10. Corrective measures to regain Construction Schedule.

11. Planned progress during the succeeding work period.

12. Coordination of projected progress.

13. Maintenance of quality and work standards.

14. Effect of proposed Modifications on Construction Schedule and coordination.

15. Review Project Record Contract Drawings.

16. Other item relating to the Work.

PART 2 P R O D U C T S - Not Used

PART 3 E X E C U T I O N - Not Used

END OF SECTION

Section 01321

CONSTRUCTION PHOTOGRAPHS

PART 1 G E N E R A L

1.01 SECTION INCLUDES

A. Photographic requirements for construction photographs and submittals.

1.02 DEFINITIONS

A. Pre-construction Photographs: Photographs taken, in sufficient numbers and detail, prior to Date of Commencement of the Work, to show original construction site conditions.

B. Progress Photographs: Photographs, taken throughout the duration of construction at regular intervals and from fixed vantage points, pre-approved by the City, that document progress of the Work.

C. Finished Photographs: Photographs, taken by a professional photographer near Date of Substantial Completion and before City Council's acceptance of the Work, that are suitable for framing and for use in brochures or on the Internet

1.03 SUBMITTALS

A. Refer to Section 01330, Submittal Procedures, for submittal requirements.

B. Format and Media. Film or digital photography may be used. Submit color photographs, unless otherwise specified.

1. Prints. Submit each Progress or Pre-construction Photograph print in a three-hole plastic pocket or sleeve, bound in a three-ring notebook. Produce prints on photographic-quality paper approved by Project Manager. Minimum size for Pre-construction Photograph prints shall be 3-inches by 5-inches. Progress Photograph prints shall be 8-inches by 10-inches.

2. Film. Use 35mm or larger color film. Submit negatives used to make submitted photographs, in 3-hole 8-1/2 inch by 11-inch plastic sheets with sleeves for negatives.

3. Digital Photography. Use 2.1 megapixel density or greater for photographs. Scanned photographs must equal or exceed 400 dots

per inch when scanned from 8-inch by 10-inch prints. Submit digital photographic files on computer disks. Format disks for MS-DOS (Microsoft Disk Operating System) filing system and in JPEG (Joint Photographic Experts Group) format.

C. Submittal Quantities and Frequencies.

1. Pre-construction Photographs:
   a. For Stipulated Price Contracts, submit two sets of Pre-construction Photographs, if required, prior to first Application for Payment.
   b. For Unit Price Contracts, submit two sets of Pre-construction Photographs prior to start of construction operations.

2. Progress Photographs:
   a. For Stipulated Price Contracts, submit three sets of Progress Photographs with each Application for Payment at the times established for submittal of Applications for Payment. Monthly Applications for Payment shall be deemed incomplete if not accompanied by the required Progress Photographs. Contractor's failure or election to not submit a monthly Application for Payment shall not affect the requirement for monthly Progress Photographs.
   b. Progress Photographs are not required for Unit Price Contracts unless otherwise specified.

3. Finished Photographs: For Stipulated Price Contracts submit two sets of Finished Photographs, if required, after Date of Substantial Completion and prior to final payment. Each set shall contain one 11-inch by 14-inch matte finish color photographic print from each of the two vantage points pre-approved by the City. Vantage points for Finished Photographs will be approved separately from vantage points approved for Progress Photographs. Finished Photographs are not required for Unit Price Contracts unless otherwise specified.

D. Labeling. Place a label on the back of each photographic print, applied so as to not to show through on the front. Labels shall contain the following information:

1. Name of Project, address of Project and GFS Number.

2. Name and address of Contractor.

3. Date photograph was taken.

4. Location photo was taken from and short description of photo subject.

5. Name and address of professional photographer who took the photograph, if applicable.

E. Hand-deliver or transmit prints in standard photographic mailers marked "Photographs - Do Not Bend".

F. Photographic prints, negatives, photographic files and disks become the property of the City. Do not be publish photographs without written consent by the City.

1.04 QUALITY ASSURANCE

A. Contractor shall be responsible for the quality of and timely execution and submittal of photographs.

B. For Finished Photographs, Contractor shall use a professional photographer, with five years minimum professional experience in the Houston area. Contractor shall submit name, address and credentials of professional photographer for Project Manager's review and approval.

PART 2 PRODUCTS - Not Used

PART 3 EXECUTION

3.01 PRE-CONSTRUCTION PHOTOGRAPHS

A. Prior to commencement of construction operations, photograph the site to include initial construction corridor, detour routes, and staging or storage areas.

1. For Stipulated Price Contracts, unless specified as a requirement in other Sections, these photographs are optional for Contractor, but are highly recommended for areas bounded by other property owners.

2. Pre-construction photographs are required for Unit Price Contracts. For line projects with scheduled construction segments, take Pre-construction Photographs prior to commencement of work on each segment.

B. Prepare Pre-construction Photographs as follows:

1. Show the following information on a non-reflective chalkboard placed within the picture frame:
   a. Job number.
   b. Project Number.
   c. Date and time photographs were taken (Automatic date/time in negative is acceptable).
   d. Baseline station, direction of view (i.e. N, S, NW, etc.) and house number or street address and street name.

2. Pre-construction Photographs shall indicate condition of the following:
   a. Esplanades and boulevards.
   b. Yards (near side and far side of street).
   c. House walks and sidewalks.
   d. Curbs.
   e. Areas between walks and curbs.
   f. Particular features (e.g. yard lights, shrubs, fences, trees).

3. Show date photographs were taken on negatives.

C. Show the location of vantage points and direction of shots on a key plan of the site.

3.02 PROGRESS PHOTOGRAPHS

A. Progress Photographs document monthly advancement of the Work. Select vantage points for each shot so as to best show status of construction and progress since last photograph submittal. Select camera stations that will require little or no movement or adjustment over the duration of construction.

B. Take monthly Progress Photographs at regular intervals to coincide with cutoff dates associated with each Application for Payment.

3.03 FINISHED PHOTOGRAPHS

A. Finished Photographs shall be “staged” and taken by a professional photographer to depict the most flattering images of a finished facility. Two vantage points, from which Finished Photographs will be taken, shall be agreed to in advance by the City. Photographer shall consider lighting, time of day, height of eye, landscaping and placement of vehicles, people and other props in each picture. Filters and post-photography processing may be utilized to achieve a finished product acceptable to the City.

3.04 LOCATION

A. Vantage points, times and conditions for camera stations and photography for Progress and Finished Photographs shall be mutually agreed upon by the City, Contractor and Photographer. Progress Photograph vantage points may be changed by mutual agreement as the Work progresses, at no additional cost to the City.

END OF SECTION

Section 01326

CONSTRUCTION SCHEDULE (BAR CHART)

PART 1 G E N E R A L

1.01 SECTION INCLUDES

A. Provide an initial Construction Schedule as required by this section for the Work. Do not start construction until Project Manager reviews the schedule.

1.02 FORM AND CONTENT OF INITIAL CONSTRUCTION SCHEDULE

A. Bar Chart:

1. Show major construction activities such as pipe laying, by traffic control phases or other approved key areas; tunnel construction, pavement removal, pavement replacement, pressure testing, chlorination, clean up and punch list as separate activities on the schedule.

2. Show week duration for each activity.

3. Show separate activities for each Shop Drawing and Product Data submittal critical to timely completion. Show submittal dates and dates Project Manager needs to provide approved submittals.

4. Provide separate horizontal bar for each activity. List start and finish date for each activity at left side of diagram.

5. Horizontal Time Scale: Identify first work day of each week.

6. Scale and Spacing: Notes must be legible. Allow space for notations and future revisions.

7. Order of Listings: Order bar chart listings by phases or other approved groups of activities that are contiguous. List activities in chronological order within each phase or group.

B. Narrative Description:

1. Submit narrative descriptions of anticipated work sequences as indicated by the sequence of activities presented in the schedule.

2. Discuss any activity that affects the public (such as phases of traffic control), interaction with specific forces of the City (such as valve operation, chlorination and testing) or other associated contractors.

1.03 PROGRESS REVISIONS

A. Submit progress revisions or necessary information to complete and process Payment Applications. When required, re-submittals for rejected revisions must be submitted and reviewed prior to the following month's processing of a Payment Application. The following month's Payment Application will not be processed until the re-submittal is reviewed and required progress revisions are received.

B. Provide a narrative report to describe:

1. Major changes in scope.

2. Revised projections in progress, completion, or changes in activity duration.

3. Other identifiable changes.

4. Problem areas, anticipated delays, and the impact on schedule.

5. Corrective action recommended and its effect.

6. Effect of changes on schedules or other contractors.

7. Product delivery lead times.

C. Include additional data with Bar Chart described in Paragraph 1.03A of this Section:

1. Show original dates for each activity in the approved initial progress schedule by narrow bar next to a wider bar for the current schedule.

2. Show date each activity actually started or finished when an event has occurred. Clearly identify actual dates in two right-most columns in left portion of an 11 by 17-inch chart.

3. Indicate the percentage progress to the date of submittal for each activity.

1.04 SUBMITTALS

A. Submit the initial progress schedule within 15 days after award of contract. Project Manager will review the schedule and return a reviewed copy within 21 days after receipt.

B. Cut-off dates for progress revisions may be as early as the 20th of the month to avoid delaying processing of Payment Applications. Use the cut-off date for the first approved revision for further revisions.

C. When required, re-submit within seven days after return of review copy.

D. Include connecting lines between bars in the schedule to indicate the sequence that activities will be accomplished. Connecting lines when the activity's start or finish is modified will identify impact of preceding or succeeding activities. Submit a minimum of six copies of the bar chart on 11 by 17-inch opaque reproductions. Project Manager will retain five copies and return the remaining copy.

PART 2 P R O D U C T S - Not Used

PART 3 E X E C U T I O N - Not Used

END OF SECTION

Section 01330

SUBMITTAL PROCEDURES

PART 1 G E N E R A L

1.01 SECTION INCLUDES

A. Submittal procedures for:

1. Schedule of Values
2. Construction Schedules and Cash Flow Curve (billing forecast).
3. Shop Drawings, Product Data and Samples
4. Operations and Maintenance (O&M) Data
5. Manufacturer's Certificates
6. Construction Photographs
7. Project Record Documents and monthly certification.
8. Video Tapes
9. Design Mixes

1.02 SUBMITTAL PROCEDURES

A. Scheduling and Handling:

1. Submit Shop Drawings, data and Samples for related components as required by Specifications and Project Manager.
2. Schedule submittals well in advance of need for construction Products. Allow time for delivery of Products after submittal approval.
3. Develop submittal schedule that allows sufficient time for initial review, correction, resubmission and final review of all submittals. Allow a minimum of 30 days for initial review. Project Manager will review and return submittals to Contractor as expeditiously as possible but time required for review will vary depending on complexity and quantity of data submitted.

4. Project Manager's review of submittals covers only general conformity to Drawings, Specifications and dimensions that affect layout. Contractor is responsible for quantity determination. No quantities will be verified by Project Manager. Contractor is responsible for errors, omissions or deviations from Contract requirements; review of submittals does not relieve Contractor from the obligation to furnish required items in accordance with Drawings and Specifications.

5. Submit five copies of documents unless otherwise specified.

6. Revise and resubmit submittals as required. Identify all changes made since previous submittal.

7. Assume risk for fabricated Products delivered prior to approval. Do not incorporate Products into the Work, or include payment for Products in periodic progress payments, until approved by Project Manager.

B. Transmittal Form and Numbering:

1. Transmit each submittal to Project Manager with Transmittal letter which includes:
   a. Date and submittal number
   b. Project title and number
   c. Names of Contractor, Subcontractor, Supplier and manufacturer
   d. Identification of Product being supplied
   e. Location of where Product is to be Installed
   f. Applicable Specification section number

2. Identify deviations from Contract documents clouding submittal drawings. Itemize and detail on separate 8-1/2 by 11-inch sheets entitled "DEVIATIONS FOR _____." When no deviations exist, submit a sheet stating no deviations exist.

3. Have design deviations signed and sealed by an appropriate design professional, registered in the State of Texas.

4. Sequentially number transmittal letters beginning with number one. Use original number for resubmittals with an alphabetic suffix (i.e., 2A for the first resubmittal of submittal 2, or 15C for third resubmittal of submittal 15, etc.). Show only one type of work or Product on each submittal. Mixed submittals will not be accepted.

C. Contractor's Stamp:

1. Apply Contractor's Stamp certifying that the items have been reviewed in detail by Contractor and that they comply with Contract requirements, except as noted by requested variances.

2. As a minimum, Contractor's Stamp shall include:
   a. Contractor's name
   b. Job number
   c. Submittal number
   d. Certification statement Contractor has reviewed submittal and it is in compliance with the Contract
   e. Signature line for Contractor

D. Submittals will be returned with one of the following Responses:

1. "ACKNOWLEDGE RECEIPT" when no response and resubmittal is required.

2. "NO EXCEPTION" when sufficient information has supplied to determine that item described is accepted and that no resubmittal is required.

3. "EXCEPTIONS AS NOTED" when sufficient information has been supplied to determine that item will be acceptable subject to changes, or exceptions, which will be clearly stated. When exceptions require additional changes, the changes must be submitted for approval. Resubmittal is not required when exceptions require no further changes.

4. "REJECTED-RESUBMIT" when submittal does not contain sufficient information, or when information provided does not meet Contract requirements. Additional data or details requested by Project Manager must be submitted to obtain approval.

1.03 MANUFACTURER'S CERTIFICATES

A. When required by Specification sections, submit manufacturers' certificate of compliance for review by Project Manager.

B. Place Contractor's Stamp on front of certification.

C. Submit supporting reference data, affidavits, and certifications as appropriate.

D. Product certificates may be recent or from previous test results, but must be acceptable to Project Manager.

1.04 DESIGN MIXES

A. When required by Specification sections, submit design mixes for review.

B. Place Contractor's Stamp, as specified in this section, on the front of each design mix.

C. Mark each mix to identify proportions, gradations, and additives for each class and type of mix submitted. Include applicable test results from samples for each mix. Perform tests and certifications within 12 months of the date of the submittal.

D. Maintain copies of approved mixes at mixing plant.

1.05 CHANGES TO CONTRACT

A. Changes to Contract may be initiated by completing a Request for Information form. Project Manager will provide a response to Contractor by completing the form and returning it to Contractor.

1. If Contractor agrees that the response will result in no increase in cost or time, a Minor Change in the Work will be issued by City Engineer.

2. If Contractor and Project Manager agree that an increase in time or cost is warranted, Project Manager will forward the Request for Proposal for negotiation of a Change Order.

PART 2 P R O D U C T S - Not Used

PART 3 E X E C U T I O N - Not Used

END OF SECTION

Section 01340

SHOP DRAWINGS, PRODUCT DATA, AND SAMPLES

PART 1 G E N E R A L

1.01 SECTION INCLUDES

A. Methods, schedules, and processes to be followed for Shop Drawings, Product Data and Sample submittals.

1.02 REQUIREMENT

A. Submit Shop Drawings, Product Data and Samples as required by Document 00700 - General Conditions and Specification sections, using procedures specified in Section 01330 - Submittal Procedures and the requirements of this Section.

B. Shop Drawings, Product Data and Samples are not considered Contract documents.

1.03 SHOP DRAWING/SUBMITTAL SCHEDULE

A. Submit a separate Shop Drawing submittal schedule at same time the Construction Schedule is submitted. List Products for which Shop Drawings and other submittals are required in the order that they appear in Specifications. Include Product Data and Sample submittals in the schedule. Payment Applications or Certificates for Payment will not be processed until Project Manager has approved the Shop Drawing submittal schedule.

1.04 SHOP DRAWINGS

A. Submit a minimum of seven sets of Shop Drawings and Product Data in a form and quality suitable for microfilming. Review and sign Shop Drawings indicating compliance with the Contract.

B. Place Contractor's Stamp on each drawing as described in Section 01330 - Submittal Procedures.

C. Show the following accurately and distinctly:

1. Field and erection dimensions;

2. Arrangement and section views;

3. Relation to adjacent materials or structure, including complete information for making connections between the Work and work under other contracts;

4. Types of Products and finishes;

5. Parts list and descriptions;

6. Assembly drawings of equipment components and accessories showing respective positions and relationships to the complete equipment package;

7. Identify details by referencing drawing sheet and detail numbers, schedule or room numbers as shown on the Contract drawings, where necessary for clarity.

D. Scale drawings to provide a true representation of the specific equipment or item Furnished.

E. Coordinate and submit components, necessary for Project Manager to adequately review submittal, as a complete package. Reproduction of the Drawings for use in Shop Drawings is not allowed.

F. For major changes to original documents, submit Computer-Aided Design (CAD) drawings on a media acceptable to Project Manager.

1.05 PRODUCT DATA

A. Submit Product Data for review as required in Specifications.

B. Place Contractor's stamp, on each data item submitted, as described in Section 01330 - Submittal Procedures.

C. Mark each copy to identify applicable Products, models, and options to be used in the Work. Where required by Specifications, supplement manufacturers' standard data to provide information unique to the Work.

D. Give manufacturers, trade name, model or catalog designation and applicable reference standard for Products specified only by reference standards.

E. Pre-approved and Pre-qualified Products.

1. For "pre-approved", "pre-qualified" and "approved" Products named in the City standard products list, provide an appropriate list designation,

as described in Section 01630 - Product Substitution Procedures, within 30 days after Notice to Proceed.

2. For Products proposed as alternates to "approved" products, provide information required to demonstrate that the proposed Products meet the level of quality and performance criteria of the "approved" product.

1.06 SAMPLES

A. Submit Samples for review as required by Specifications. Have Samples reviewed and signed by a Registered Professional.

B. Place Contractor's stamp on each Sample or firmly attach a sheet of paper with Contractor's stamp, as described in Section 01330 - Submittal Procedures.

C. Submit the number of Samples specified in Specifications; Project Manager will retain one.

D. Reviewed Samples that may be used in the Work are identified in Specifications.

PART 2 P R O D U C T S - Not Used

PART 3 E X E C U T I O N - Not Used

END OF SECTION

SECTION 01351

ENVIRONMENTAL SAFETY AND WORKER PROTECTION

PART 1 GENERAL

1.01 SECTION INCLUDES

Environmental Safety and Worker Protection including monitoring emissions and exposure to workers and providing an appropriate response. The role of the Certified Industrial Hygienist (CIH) is also defined.

1.02 MEASUREMENT AND PAYMENT

No separate measurement and payment for work performed under this Section. The Contractor shall include the cost for this work in the contract bid price for work of which this is a component part.

1.03 REFERENCES

The following is a list of applicable requirements to this project. It is not intended to be a complete listing of all laws and regulations to which the Contractor must comply.

A. Code of Federal Regulations

1. 29 CFR 1910, "Occupational Safety and Health Standards".

   a. 29 CFR 1910.146 "Permit-required confined spaces".

2. 29 CFR 1926, "Safety and Health Regulations for Construction" (Construction Industry Standards).

   a. 29 CFR 1926.33 "Access to Employee Exposure and Medical Records".

   b. 29 CFR 1926.51, "Sanitation Standard".

   c. 29 CFR 1926.59, "Hazard Communication".

   d. 29 CFR 1926.62, "Lead".

   e. 29 CFR 1926.103 "Respiratory Protection".

3. 40 CFR 50, "National Primary and Secondary Ambient Air Quality

Standards"

a. 40 CFR 50 Appendix B, "Reference Method for the Determination of Suspended Particulate Matter in the Atmosphere (High Volume Method)".

b. 40 CFR 50 Appendix G, "Reference Method for the Determination of Lead in Suspended Particulate Matter Collected from Ambient Air".

4. 40 CFR 58, "Ambient Air Quality Surveillance".

5. 40 CFR 60 Appendix A, "Visual Determination of Fugitive Emissions from Material Sources and Smoke Emissions from Fires".

6. 40 CFR 117, "Determination of Reportable Quantities for Hazardous Substances".

7. 40 CFR 122, "Administered Permit Program: The National Pollutant Discharge Elimination System".

B. National Institute for Occupational Health and Safety

NIOSH Method 7082, "Lead" (or equivalent).

C. American Society for Testing and Materials

ASTM D3335, "Test Method for Low Concentrations for Lead, Cadmium, and Cobalt in Paint by Atomic Absorption Spectroscopy."

D. EPA (Environmental Protection Agency) Publications

1. SW-846, "Test Methods for Evaluating Solid Waste - Physical/Chemical Methods".

2. EPA Method 3050, "Acid Digestion of Sediments, Sludges, and Soils".

E. SSPC Guide 6, "Guide for Containing Debris Generated During Paint Removal Operations".

F. SSPC Guide 7, "Guide for the Disposal of Lead Contaminated Surface Preparation Debris".

G. SSPC Publication 91-18, "Industrial Lead Paint Removal Handbook".

H. Texas Commission on Environmental Quality

1. Texas Administrative Code (TAC) 30, Chapter 101, "General Rules".

2. Texas Administrative Code (TAC) 30, Chapter 111, "Control of Air Pollution from Visible Emissions and Particulate Matter".

3. Texas Administrative Code (TAC) 30, Chapter 290, "Water Hygiene".

4. Texas Administrative Code (TAC) 30, Chapter 307, "Surface Water Quality Standards".

5. Texas Administrative Code (TAC) 30, Chapter 309, "Effluent Limitations".

6. Texas Administrative Code (TAC) 30, Chapter 335, "Industrial Solid Waste and Municipal Hazardous Waste".

1.04 SUBMITTALS

A. Submittals shall conform to requirements of Section 01330 – Submittal Procedures.

B. Submittals shall conform to appropriate codes for regulatory requirements.

1.05 DEFINITION

A. Acceptance Criteria: Minimum standards for the content of programs, plans, procedures, and designs required by this specification for the performance of this project. Acceptance criteria will be the basis for judging the responsiveness of Contractors' programs and will also be used as a basis for suspending work, if necessary.

B. Action Level: Employee exposure, without regard to the use of respirators, to an airborne concentration of lead of 30 micrograms per cubic meter of air (µg/m3) calculated as an eight hour time-weighted average (TWA).

C. CERCLA: Comprehensive Environmental Response, Compensation, and Liability Act; commonly called Superfund. Federal laws addressing the clean up of hazardous waste sites. Amended in 1986 by Superfund Amendments and Re-Authorization Act (SARA). EPA implementing regulations are contained in 40 CFR 300-373.

D. Competent Person: One who is capable of identifying existing and predictable lead hazards in the surroundings or working conditions and who has authorization to take prompt corrective measures to eliminate them.

E. Containment System: An enclosure built around lead paint removal areas designed to contain lead paint debris and prevent emissions to the environment.

F. Dust Collection: Mechanical ventilation system designed specifically for the containment, capture, and removal of airborne particulate from the containment. Dust collection systems shall include ductwork, plenums and/or hoppers, and dust collector(s) for the removal of leaded paint dust from the air stream prior to discharging to the atmosphere.

G. Emission: A release of material to the air, water, or ground.

H. Entry/Exit Airlock: An isolated enclosure located at the entrance of the containment in which the workers remove contaminated dust and debris from their work clothes.

I. EPA: The US. Environmental Protection Agency. Regulations are contained in Title 40 of the Code of Federal Regulations (40 CFR).

J. Hazardous Waste (lead paint debris): Waste that is classified as hazardous due to its concentrations of regulated hazardous substances. Paint debris is classified as hazardous waste if, after testing by the Toxicity Characteristic Leaching Procedure (TCLP), the leachate contains any of the 8 metals or other substances in concentrations at or above limits established in 40 CFR 261.

K. HEPA: A high efficiency particulate filter (HEPA) that is 99.97% efficient against particles of 0.3 microns in size or larger.

L. Lead Containing Dust and Debris: Dust and debris generated during the project which contains lead in any amount, including but not limited to pulverized paint, spent abrasive, filters (wet and dry), and containment materials upon which lead is still present.

M. NIOSH: National Institute of Occupational Safety and Health.

N. OSHA: Occupational Safety and Health Administration. Standards are contained in Title 29 of the Code of Federal Regulations, Parts 1910 and 1926 (29 CFR 1910 and 29 CFR 1926).

O. Owner: The City of Houston

P. PEL: Permissible Exposure Limit. An employee exposure, without regard to the use of respirators, to an airborne concentration of lead of 50 µg/m3 over an 8 hour TWA.

Q. POTW: Publicly Owned Treatment Works

R. RCRA: Resource Conservation and Recovery Act. Federal law pertaining to hazardous waste management. EPA implementing regulations are contained in 40 CFR 240-280.

S. Regulated Area: Area established by the Contractor to demarcate the zone(s) beyond which airborne concentrations of lead do not exceed the Action Level.

T. SSPC: Society for Protective Coatings. An independent, non-profit organization of engineers, technical specialists, and Contractors whose goal is research and development of new coatings and methods for removal, application, and disposal of existing coatings on industrial structures.

U. Tarpaulins: Flexible fabric, vinyl, plastic or canvas cover sheets, impenetrable to dust, wind, and water, used to enclose the cable and/or scaffold support system comprising the containment enclosure.

V. TCLP: Toxicity Characteristic Leaching Procedure. Laboratory tests conducted on wastes that determine the amount of hazardous materials that leach out into a test solution. The test is intended to simulate the properties of water as it leaches through a solid waste landfill. TCLP testing is defined in 40 CFR 261, Appendix II.

W. TSP: Total Suspended Particulate

PART 2 PRODUCTS

2.01 MATERIAL AND EQUIPMENT

A. The Contractor is to supply materials and equipment to insure the safety and protection of workers and the environment in accordance with these specifications.

PART 3 EXECUTION

3.01 ENVIRONMENTAL PROTECTION AND MONITORING

NOTE: Section 09971 "Painting and Protective Coatings", 2.04 "Containment System" specifically identifies containment system requirements.

A. Protection of Ambient Air: Visible emissions are to be controlled to meet, as a minimum, TAC 30 Chapter 111," Control of Air Pollution from Visible Emissions and Particulate Matter" requirements and SSPC-Guide 6I (CON), Level 1 Emissions. Air monitoring and analysis may be performed by the City during abrasive blast cleaning operations. Such monitoring will be in accordance with 40

CFR 50, Appendix B, "Reference Method for the Determination of Suspended Particulate Matter in the Atmosphere" and/or 40 CFR 50, Appendix G, "Reference Method for the Determination of Lead in Suspended Particulate Matter Collected from Ambient Air". The limits for down wind pollutant concentrations allowed during blasting operations are as follows:

PM-10: 450 micrograms/cubic meter/ 8 hr.. (40 CFR 50.6)

Lead (Pb): 13.5 micrograms/cubic meter/8 hr.. (40 CFR 50.12)

Visible emissions and/or monitored emissions for PM-10 and TSP lead in excess of the above levels shall be cause for shut down of the project until corrections to control/ containment system or paint removal/ surface preparation operations are made to comply with these requirements.

B. Protection of Surface and Storm Water: The Contractor shall take all necessary precautions to ensure lead contaminants do not enter surface waters or storm water drainage systems.

1. The Contractor shall protect the area around ditches and drainage inlets. Daily verification of proper protection to minimize the potential contaminants reaching the drainage system shall be performed.

2. The Contractor shall collect all potentially contaminated process waters for testing and, as appropriate, treatment. Process water from pressure washing, wet abrasive blast cleaning or hygiene facilities shall not be discharged to drainage systems or surface waters.

3. The Contractor may remove lead or other heavy metals from such waters through filtration, ion exchange or other approved means. Following treatment, water samples must be tested prior to disposal. Discharge to sanitary sewer lines requires authorization, in writing, from a POTW.

C. Protection of Soil and Grounds: The Contractor shall protect the soil around the structure to ensure that the soil does not become contaminated. Where lead is present in the coatings to be removed, as indicated in Section 02136 "Waste Material Handling and Disposal", the Contractor shall provide for the sampling and analysis of soil samples for total lead content.

1. Sampling and analysis shall be performed prior to commencement of paint removal operations to establish a background "base level". Soil samples shall be taken 3 feet from the base of the tank(s), at a distance of 6-10 feet beyond the proposed containment structure and at the property line.

2. Samples from each area shall be taken in a minimum of four directions, at

circular increments of 90^0, one of which shall include the direction of prevailing wind. Samples shall also be obtained, at the direction of the engineer, at the closest points of public access (i.e. housing, park, school).

3. The soil sampling procedure shall be as outlined in SSPC Guide 6 Section 5.5.5. Each sampling point shall be sufficiently identified on a site map to allow return to the exact location upon project completion.

4. Each sample shall be split in two portions, one for immediate analysis and the other sealed, preserved and furnished to the Engineer. The samples shall be analyzed in accordance with EPA Method 3050, "Acid Digestion of Sediments, Sludges and Soils", and shall be performed by a qualified laboratory approved by the Engineer.

5. Samples shall be obtained at the completion of work (post-construction samples) from all locations from which pre-construction samples were obtained. Samples shall be collected, handled and tested in the same manner as described above.

6. Upon completion of the work, soils found to be contaminated with lead in greater quantity than found in the background "base level", established at the start of the work, shall be removed by the Contractor to the depth necessary to achieve a lead content equivalent to, or below, the pre-construction back ground levels. Disposal shall be in accordance with applicable regulations.

7. The Contractor shall replace in-kind (i.e., topsoil, structural fill, etc.) with an equivalent amount of non-contaminated soil, compact in place and grade to pre-existing conditions. The Contractor shall also replace in-kind any surface improvements, such as grass, shrubs, etc. that were damaged or destroyed by the work. The soil removal, replacement and related work is to be performed by the Contractor at no additional cost to the Owner.

3.02 WORKER PROTECTION

A. The Contractor shall develop a written Compliance Program to establish and implement practices and procedures for assuring that no employee is exposed to lead at concentrations greater than 50 micrograms per cubic meter of air ($\mu g/m^3$), the OSHA permissible exposure limit (PEL). This program is in addition to other OSHA hazard communication and safety and health requirements of the project, and shall be revised and updated at least every six months.

1. The program shall establish methods for complying with this specification and the OSHA Construction Industry Lead Standard, 29 CFR 1926.62(e)(2)(ii). The Federal regulation is referred to as the "Lead

Standard" for the purpose of this specification.

2. The program shall apply to all Contractor employees associated with lead on the project, and to subcontractors working under the direct control of the Contractor who are associated with lead on the project.

3. The program shall assign the specific responsibility for implementation and enforcement of the program to the Contractors' company management. The Contractor's Competent Person(s) shall be identified, by name, and qualifications submitted. The Competent Person shall be on-site during any operations which involve the removal, handling or disturbing of lead containing materials.

4. The program shall contain a description of each activity in which lead is emitted (e.g. equipment used, material involved, controls in place, crew size, employee job responsibilities, operating procedures and maintenance practices).

5. The program shall contain a report of the technology considered in meeting the PEL and air monitoring data which documents the source of lead emissions.

6. The program shall contain a work practice program which includes items required in the lead standard such as protective clothing and equipment, housekeeping, and hygiene facilities and practices.

B. Exposure Monitoring: The Contractor shall be responsible for conducting and reporting worker exposure assessments in accordance with 29 CFR 1926.62.

1. Representative personal air samples shall be collected at the beginning of the lead removal work to determine employee lead exposures. Tasks involving potential lead exposure include, but are not limited to, paint removal operations, clean-up, and debris handling operations. Full shift (at least 7 hours) air samples shall be collected for each job classification in the exposure area. The range of exposures for lead removal and cleanup activities shall be determined.

2. During the initial monitoring, workers performing the following activities (or equivalent) shall be protected to the anticipated exposure levels which are dictated by the lead standard:

   a. 500 $\mu g/m^3$: Manual demolition of structures containing lead-containing coatings or paint (e.g., dry wall), manual scraping, manual sanding, heat gun applications, power tool cleaning with dust collection systems, and spray painting with lead paint.

b. 2,500 μg/m^3 : Using lead-containing mortar, lead burning, or conducting the following activities where lead-containing coatings or paint are present: rivet busting, power tool cleaning without dust collection systems, clean-up activities where dry expendable abrasives are used, and the movement and removal of abrasive blasting enclosures.

c. More than 2,500 μg/m^3: Activities involving lead containing coatings or paint on structures disturbed by abrasive blasting, welding, cutting, and torch burning.

3. Protection requires compliance with the necessary respiratory protection, personal protective clothing and equipment, change areas and washing facilities, blood lead and zinc protoporphyrin monitoring, and employee training. The protection measures shall be modified, as necessary, after the exposure results are received.

4. Where initial monitoring indicates that lead exposures are below the Action Level, and where work activities and conditions remain the same as at the time of initial sampling, additional monitoring need not be repeated for that work activity.

5. Where the initial monitoring of a given work activity indicates that lead exposures are at or above the Action Level, additional exposure monitoring shall be conducted monthly. The monthly monitoring is more frequent than frequencies established in the lead standard which are at least every 6 months if above the Action Level, but below the PEL, or every 3 months if above the PEL.

6. All air samples shall be collected and analyzed according to NIOSH Method 7082, or equivalent. All samples shall be analyzed by laboratories accredited by the American Industrial Hygiene Association for metals analysis.

7. All exposed employees shall be notified in writing of the monitoring results within five (5) days after receiving the results.

8. The Action Level for airborne lead exposure is 30 μg/m^3, as an 8-hour time weighted average (TWA) concentration, without regard to the use of respirators. Whenever workers' airborne lead exposures exceed the Action Level, the Contractor shall implement the following:

   a. Periodic Exposure Monitoring
   b. Employee Information and Training

c. Employee Medical Surveillance and Medical Removal Protection
d. Housekeeping
e. Record keeping
f. Signs and Regulated Areas

9. The Permissible Exposure Limit (PEL) for airborne lead exposure is 50 $\mu g/m^3$, as an 8-hour TWA concentration. When the work area contains airborne lead levels above the PEL the Contractor shall implement the following in addition to those items listed in 3.02.B.8 of this section:

a. Compliance Program
b. Respiratory Protection
c. Protective Clothing and Equipment
d. Hygiene Facilities and Practices

C. Respiratory Protection: After feasible engineering controls and work practices have been implemented, respiratory protection shall be used to maintain employees' lead exposures below the PEL.

1. Respirators shall be worn by all employees, other Contractors, inspectors, or observers who enter regulated areas.

2. The Contractor shall develop a written Respiratory Protection Program in compliance with 29 CFR 1910.134, paragraphs (b), (d), (e), and (f), and the lead standard. The program shall address the selection, use, maintenance, and inspection of respirators, and qualifications for respirator users.

D. Protective Clothing and Equipment: The Contractor shall provide protective clothing and equipment and ensure they are worn by all employees whose lead exposures exceed the PEL, or who enter regulated areas.

1. Protective clothing shall include washable and/or disposable full body coveralls, gloves, foot coverings, and hoods. Other protective equipment shall include face shields, hard hats, eye protection, and hearing protection as appropriate.

2. Disposable protective clothing shall be used for no more than one work day. Such clothing may have to be disposed of as hazardous waste.

3. Reusable protective equipment shall be cleaned or replaced weekly if exposure levels are less than 200 $\mu g/m^3$, or daily if the exposure levels are greater than or equal to 200 $\mu g/m^3$.

4. Clothing shall not be removed or "cleaned" by any means which could reintroduce the lead dust into the ambient air. This includes brushing,

shaking, and blowing. Vacuums equipped with HEPA filters shall be used for this purpose.

5. Reusable coveralls shall be collected at the end of each work day in closed containers. The containers shall be labeled in accordance with the requirements of 29 CFR 1926.62(g)(2)(vii). Contaminated clothing shall be cleaned in accordance with all applicable Federal, State, or local regulations pertaining to lead-contaminated laundry and water discharge. Laundries shall be informed that the clothing contains lead. If the clothing is washed on site, the discharge water shall be filtered, containerized, and arrangements made with the local POTW or other approved means of proper disposal.

6. Protective clothing and equipment shall be removed in the contaminated section of the change area and shall not be worn into any clean areas.

7. The Contractor shall provide the necessary clothing and equipment for use by the Owner and its designated representatives.

E. Housekeeping: Accumulations of lead-containing dust and debris generated by work activities shall be removed and cleaned daily.

1. All persons doing the cleanup shall be trained in performing lead activities, respirator qualified, and participate in the medical surveillance program. Respirators and protective clothing shall be worn by all persons doing the cleanup.

2. Compressed air may be used for housekeeping if used within containment and in conjunction with a ventilation system designed to capture the dust. Otherwise, HEPA-filtered vacuum cleaners shall be employed.

3. All lead-containing dust and debris shall be collected in sealed containers. The waste shall be tested to determine whether it will be disposed of as hazardous waste.

F. Personal Hygiene Facilities and Practices

1. Clean change areas shall be provided when employees' lead exposures exceed the PEL. The change areas shall be equipped with storage facilities for street clothing and a separate area for the removal and storage of lead-contaminated clothing and equipment. They shall be designed and used so that contamination of street clothing does not occur. Employees shall not leave the project site wearing any clothing worn while performing lead activities. Airborne lead exposures in the change area shall be maintained below the Action Level.

2. Shower facilities shall be provided whenever employees' lead exposures exceed the PEL. Shower facilities shall comply with OSHA Sanitation Standard, 29 CFR 1929.51. All employees whose lead exposures exceed the PEL shall shower at the end of each work shift or before leaving the project area. The shower facilities shall be made available for use by the Owner and its representatives, such as inspectors or observers.

3. Arrangements shall be made with the local POTW for the proper disposal of the shower and wash water after filtration (e.g., through a three stage 100, 50, and 5 micron filtering system), ion exchange, or other approved treatment technology.

4. Clean lunch areas shall be provided for all employees whose lead exposures exceed the PEL. Employees shall remove or clean (by vacuuming) their protective clothing and wash their hands and face before entering the lunch area. Lead exposures in the lunch area shall be maintained as free as practicable from lead contamination.

5. An adequate number of clean lavatory and hand washing facilities shall be provided. These shall comply with the OSHA Sanitation Standard, 29 CFR 1929.51.

6. Eating, drinking, smoking, chewing of food or tobacco products, or the application of cosmetics shall not be permitted in any areas where the lead exposures exceed the PEL. Thorough washing of hands and face is required prior to undertaking any of these activities.

G. Medical Surveillance and Medical Removal Protection

1. All employees who are exposed to lead above the Action Level in a single day during this project shall be provided with initial and periodic medical examinations and blood lead tests as required by the lead standard. A final blood lead test shall be provided for each worker upon completion of the project, or at any time a worker's employment at the project ceases.

2. When blood lead levels over 50 µg/dl are encountered, the Contractor shall provide for the temporary removal of employees from lead exposure above the Action Level. The required medical surveillance and periodic blood lead tests shall be provided in strict accordance with the lead standard throughout the removal.

3. Employees who will be required to wear a respirator or who request one shall be provided with a respirator and the necessary medical examinations to determine their ability to wear a respirator.

4. All examinations shall be provided by the Contractor and shall be performed by or under the direct supervision of a licensed physician.

H. Employee Information and Training

1. The Contractor shall provide lead training for all employees who are exposed to lead above the Action Level for this project.

2. The content of lead training shall include, as a minimum, those items listed in the lead standard.

3. Training shall also include hazard communication in accordance with 29 CFR 1926.59.

4. The Contractor shall notify other employers at the project site of the nature of the lead exposure work, the need to remain out of exposure areas, the warning sign and labeling system in effect, and the potential need for them to take measures to protect their employees.

I. Signs and Regulated Areas

1. The Contractor shall establish a regulated area surrounding activities where lead exposures exceed the Action Level. This includes locations where lead-containing debris is handled or transferred to storage containers.

2. The regulated area shall be demarcated by ropes, tape, walls, or containment's with caution signs posted at all accessible sides. Signs shall contain the legend:

WARNING
LEAD WORK AREA
POISON
NO SMOKING OR EATING

3. The Contractor shall control access of persons into regulated areas. Access shall be limited to individuals with proper training and personal protective equipment, and medical surveillance testing.

4. All persons entering regulated areas shall wear protective clothing and respirators.

5. Eating, drinking, smoking, and chewing of food or tobacco products shall be prohibited in regulated areas and in any area where lead exposures exceed the Action Level.

J. Record keeping: All records relating to training, medical examinations, blood lead monitoring, and exposure monitoring shall be maintained by the Contractor as required by the lead standard. All records shall be available for review by the Owner or its representative upon request.

3.03 CERTIFIED INDUSTRIAL HYGIENIST (CIH)

A. The Contractor shall provide for the services of a Certified Industrial Hygienist (CIH) who must be certified by the American Board of Industrial Hygiene in comprehensive practice.

B. Duties of the CIH shall be as follows:

1. Conduct and/or verify training for contractor employees in accordance with 29 CFR 1926.62 (l).

2. Review and approve Contractor's Written Compliance Plan for conformance to 29 CFR 1926.62(e)(2)(ii) and this Specification.

3. Monitor and evaluate work weekly to assure conformance with the approved plan and that hazardous exposure is adequately controlled in accordance with worker safety and health requirements of these specifications.

4. Provide monthly reports of work compliance with control requirements in regards to working in a lead environment.

C. Activities of the CIH shall include:

1. Meet with City to discuss details of Contractor's Written Compliance Plan for lead paint removal.

2. Ensure worker and area air monitoring, testing and reporting are conducted by or under the direction of the CIH.

3. Furnish a detailed worker and area air monitoring schedule coordinated with Contractor's proposed production schedule.

4. Directing, monitoring and inspecting lead paint removal work to ensure that the requirements of the Contract have been satisfied during the entire lead paint removal operation.

5. Report results of air monitoring samples to the Engineer, signed by the CIH within 48 hours after the air samples are taken.

6. The CIH shall review sampling data, collected on a day when lead paint

removal operations occur, to determine if conditions require any change in work methods. Removal work shall not continue until approval is given by the CIH.

7. The CIH shall verify in writing and submit monitoring data to verify that:

   a. Air borne lead levels at and beyond the lead control (regulated) area were and remained less than 30 mg/m^3 of air

   b. Contractor conformance to 29 CFR 1926.62 and Item 3.02, above

   c. There were no visible accumulations of lead contaminated paint, dust or debris on the work site. Adjacent areas that may have become contaminated were properly cleaned and inspected.

   d. The CIH shall verify that the work area and contractor's equipment have been adequately cleaned of lead contamination prior to demobilization from the work site.

3.04 DEMOBILIZATION

The Contractor shall not remove the lead control area, boundaries, warning signs, etc. prior to proper removal of all hazardous wastes, debris and materials from the site and the City's receipt and acceptance of the CIH's verification.

END OF SECTION

Section 01410

TPDES REQUIREMENTS

1.01 SECTION INCLUDES

A. Documentation to be prepared and signed by Contractor/Operator before conducting construction operations, in accordance with the Texas Pollutant Discharge Elimination System (TPDES) Construction General Permit Number TXR 150000 issued February 15, 2008 (the Construction General Permit).

B. Implementation, maintenance inspection, and termination of storm water pollution prevention control measures including, but not limited to, erosion and sediment controls, storm water management plans, waste collection and disposal, off-site vehicle tracking, and other appropriate practices shown on the Drawings or specified elsewhere in the Contract.

C. Review of the Storm Water Pollution Prevention Plan (SWP3) implementation in a meeting with Project Manager prior to start of construction.

1.02 DEFINITIONS

A. Commencement of Construction Activities: The exposure of soil resulting from activities such as clearing, grading, and excavation activities, as well as other construction related activities (e.g., stock piling of fill material, demolition).

B. Large Construction Activity: Project that:o

1. disturbs five acres or more, or

2. disturbs less than five acres but is part of a larger common plan of development that will disturb five acres or more of land.

C. Small Construction Activity: Project that:

1. disturbs one or more acres but less than five acres, or

2. disturbs less than one acre but is part of a larger common plan of development that will ultimately disturb one or more acres but less than five acres.

D. TPDES Operator:

Operator - The person or persons associated with a large or small construction activity that is either a primary or secondary as defined below:

Primary Operator – the person or persons associated with a large or small construction activity that meets either of the following two criteria:

(a) the persons have operational control over construction plans and specifications, including the ability to make modifications to those plans and specifications; or

(b) the person or persons have day-to-day operational control of those activities at a construction site that are necessary to ensure compliance with a storm water pollution prevention plan (SWP3) for the site or other permit conditions (e.g., they are authorized to direct workers at a site to carry out activities required by the SWP3 or comply with other permit conditions).

Secondary Operator – The person whose operational control is limited to the employment of other operators or to the ability to approve or disapprove changes to plans and specifications. A secondary operator is also defined as a primary operators if there are no other operators if there are no other operators at the construction site.

PART 2 P R O D U C T S - Not Used

PART 3 E X E C U T I O N

3.01 SITE SPECIFIC STORM WATER POLLUTION PREVENTION PLAN (SWP3)

A. Prepare a SWP3 following Part III of the Construction General Permit and the Storm Water Management Handbook for Construction Activities issued under City Ordinance Section 47-695(b). If conflicts exist between the Construction General Permit and the handbook, the more stringent requirements will apply.

B. Update or revise the SWP3 as needed during the construction following Part III, Section E of the Construction General Permit.

C. Submit the SWP3 and any updates or revisions to Project Manager for review and address comments prior to commencing, or continuing, construction activities.

3.02 NOTICE OF INTENT For Large Construction Activity

A. Fill out, sign, and date TCEQ Form 20022 (03/05/2008) Notice of Intent (NOI) for Storm Water Discharges Associated with Construction Activity under the TPDES Construction General Permit (TXR 150000), **ATTACHMENT 1** of this Section 01410.

B. Transmit the signed Contractor's copy of TCEQ Form 20022 (03/05/2008), along with a $325.00 check, made out to Texas Commission on Environmental Quality, and the completed Payment Submittal Form to Project Manager.

C. Project Manager will complete a separate TCEQ Form 20022 (03/05/2008) for City's Notice of Intent, and will submit both Notices, along with checks for application fees, to the TCEQ.

D. Submission of the Notice of Intent form by both the City and Contractor to TCEQ if mailing is required a minimum of seven days before Commencement of Construction Activities.

3.03 CONSTRUCTION SITE NOTICE FOR SMALL CONSTRUCTION ACTIVITY

A. Fill out, sign, and date the Construction Site Notice, Attachment 2 to TPDES General Permit TXR 150000, "Construction Site Notice", **ATTACHMENT 2** of this Section 01410.

B. Transmit the signed Construction Site Notice to Project Manager at least seven days prior to Commencement of Construction Activity.

3.04 CERTIFICATION REQUIREMENTS

A. Fill out TPDES Operator's Information form, **ATTACHMENT 3** of this Section 01410, including Contractor's name, address, and telephone number, and the names of persons or firms responsible for maintenance and inspection of erosion and sediment control measures. Use multiple copies as required to document full information.

B. Contractor and Subcontractors shall sign and date the Contractor's / Subcontractor's Certification for TPDES Permitting, **ATTACHMENT 4** of this Section 01410. Include this certification with other Project certification forms.

C. Submit properly completed certification forms to Project Manager for review before beginning construction operations.

D. Conduct inspections in accordance with TCEQ requirements. Ensure persons or firms responsible for maintenance and inspection of erosion and sediment control measures read, fill out, sign, and date the Erosion Control Contractor's Certification for Inspection and Maintenance. Use the City of Houston Storm Water Pollution Prevention Plan, Construction Site Inspection Report, **ATTACHMENT 5** of this Section 01410 to record maintenance inspections and repairs.

3.05 RETENTION OF RECORDS

A. Keep a copy of this document and the SWP3 in a readily accessible location at the construction site from Commencement of Construction Activity until submission of the Notice of Termination (NOT) for Storm Water Discharges Associated with Construction Activity under TPDES Construction General Permit (TXR 150000). Contractors with day-to-day operational control over SWP3 implementation shall have a copy of the SWP3 available at a central location, on-site, for the use of all operators and those identified as having responsibilities under the SWP3. Upon submission of the NOT, submit all required forms and a copy of the SWP3 with all revisions to Project Manager.

3.06 REQUIRED NOTICES

A. Post the following notices from effective date of the SWP3 until date of final site stabilization as defined in the Construction General Permit:

1. Post the TPDES permit number for Large Construction Activity, with a signed TCEQ Construction Site Notice for large or Small Construction Activity. Signed copies of the City's and Contractor's NOI must also be posted.

2. Post notices near the main entrance of the construction site in a prominent place where it is safely and readily available for viewing by General Public, Local, State, and Federal Authorities. Post name and telephone number of Contractor's local contact person, brief project description and location of the SWP3.

   a. If posting near a main entrance is not feasible due to safety concerns, coordinate posting of notice with Project Manager to conform to requirements of the Construction General Permit.

   b. If Project is a linear construction project (e.g.: road, utilities, etc.), post notice in a publicly accessible location near active construction. Move notice as necessary.

3. Post a notice to equipment and vehicles operators, instructing them to stop, check, and clean tires of debris and mud before driving onto traffic lanes. Post at each stabilized construction access area.

4. Post a notice of waste disposal procedures in a readily visible location on site.

3.07 ON-SITE WASTE MATERIAL STORAGE

A. On-site waste material storage shall be self-contained and shall satisfy appropriate local, state, and federal rules and regulations.

B. Prepare list of waste material to be stored on-site. Update list as necessary to include up-to-date information. Keep a copy of updated list with the SWP3.

C. Prepare description of controls to reduce pollutants generated from on-site storage. Include storage practices necessary to minimize exposure of materials to storm water, and spill prevention and response measures consistent with best management practices. Keep a copy of the description with the SWP3.

3.08 NOTICE OF TERMINATION

A. Submit a NOT, **ATTACHMENT 7** of this Section 01410, to Project Manager within 30 days after:

1. Final stabilization has been achieved on all portions of the site that are the responsibility of the Contractor; or

2. Another operator has assumed control over all areas of the site that have not been stabilized; and

3. All silt fences and other temporary erosion controls have either been removed, scheduled to be removed as defined in the SWP3, or transferred to a new operator if the new operator has sought permit coverage.

B. Project Manager will complete City's NOT and submit Contractor and City's notices to the TCEQ and MS4 entities.

END OF SECTION

PAGE LEFT INTENTIONALLY BLANK

ATTACHMENT 1

TCEQ

Notice of Intent (NOI) for Storm Water Discharges Associated with Construction Activity under the TPDES Construction General Permit (TXR150000)

For help completing this application, read the TXR150000 NOI Instructions (TCEQ-20022-Instructions).

TCEQ Office Use Only
TPDES Permit Number: TXR15|__|__|__|__| - NO
GIN Number: |__|__|__|__|__|__|__|__|

A. Construction Site Operator ☐New ☐No Change Customer Reference Number: CN _____
Name: _____
Mailing Address: _____ City: _____ State: ____ Zip Code: _____
Country Mailing Information (*if outside USA*) Territory: _____ Country Code: _____ Postal Code: _____
Phone Number: _____ Extension: _____ Fax Number: _____
E-mail Address: _____
Type of Operator: ☐ Individual ☐ Sole Proprietorship - D.B.A. ☐ Partnership ☐ Corporation ☐ Federal Government
☐ State Government ☐ County Government ☐ City Government ☐ Other: _____
Independent Operator? ☐ Yes ☐ No Number of Employees: ☐ 0-20 ☐ 21-100 ☐ 101-250 ☐ 251-500 ☐ 501 or higher
Federal Tax ID: _____ State Franchise Tax ID Number: _____ DUNS Number: _____

B. Billing Address
Name: _____
Mailing Address: _____ City: _____ State: ____ Zip Code: _____
Country Mailing Information (*if outside USA*) Territory: _____ Country Code: _____ Postal Code: _____

C. Project / Site Information ☐New ☐No Change Regulated Entity Reference Number: RN _____
Name: _____
Mailing Address: _____ City: _____ State: ____ Zip Code: _____
Physical Address: _____ City: _____ County: _____ Zip Code: _____
Location Access Description: _____
Latitude: ___ ° ___ ' ___ " N Longitude: ___ ° ___ ' ___ " W Degrees (°), Minutes ('), and Seconds (")
Latitude: _____ Longitude: – _____ Decimal Form
Standard Industrial Classification (SIC) code: _____ Also, describe the construction activity at this site (*do not repeat the SIC code*):
_____
Has a storm water pollution prevention plan been prepared as specified in the general permit (TXR150000)? ☐ Yes ☐ No
Estimated area of land disturbed (to the nearest acre): _____ Is the project / site located on Indian Country Lands? ☐ Yes ☐ No
Does this project / site discharge storm water into a municipal separate storm sewer system (MS4)? ☐ Yes ☐ No
If yes, provide the name of the MS4 operator: _____
Provide the name or segment number of the water body that receives storm water from this project / site: _____

D. Contact - If the TCEQ needs additional information regarding this application, who should be contacted?
Name: _____ Title: _____
Phone Number: _____ Extension: _____ Fax Number: _____
E-mail Address: _____

E. Payment Information - Check / Money Order Number: _____ Name on Check / Money Order: _____

F. Certification
I certify under penalty of law that this document was prepared under my direction or supervision in accordance with a system designed to assure that qualified personnel properly gather and evaluate the information submitted. Based on my inquiry of the person or persons who manage the system, or those persons directly responsible for gathering the information, the information submitted is, to the best of my knowledge and belief, true, accurate, and complete. I am aware there are significant penalties for submitting false information, including the possibility of fine and imprisonment for knowing violations.

Construction Site Operator:
Prefix: _____ First: _____ Middle: _____
Last: _____ Suffix: _____ Title: _____
Signature: _____ Date: _____

If you have questions on how to fill out this form or about the storm water program, please contact us at (512) 239-4671.
Individuals are entitled to request and review their personal information that the agency gathers on its forms. They may also have any errors in their information corrected. To review such information, contact us at (512) 239-3282.

The completed NOI must be mailed to the following address. Use the attached document to submit the $100 application fee. Please note that the NOI and application fee are submitted separately to different addresses.

Texas Commission on Environmental Quality
Storm Water & General Permits Team; MC - 228
P.O. Box 13087
Austin, Texas 78711-3087

TCEQ-20022 (05/03) Page 1 of 2

ATTACHMENT 1

Texas Commission on Environmental Quality
Payment Submittal Form

The storm water application fee shall be sent under separate cover to the Texas Commission on Environmental Quality.

This form must be used to submit your Storm Water Application Fee. Please complete the following information, staple your check in the space provided at the bottom of this document, and mail it to:

BY REGULAR U.S. MAIL

Texas Commission on Environmental Quality
Financial Administration Division
Cashier's Office, MC-214
P.O. Box 13088
Austin, TX 78711-3088

BY OVERNIGHT/EXPRESS MAIL

Texas Commission on Environmental Quality
Financial Administration Division
Cashier's Office, MC-214
12100 Park 35 Circle
Austin, TX 78753

Fee Code: GPA

Storm Water General Permit: TXR150000

Check / Money Order No: _____

Amount of Check/Money Order: _____

Date of Check or Money Order: _____

Name on Check or Money Order: _____

Facility / Site Name: _____

Facility / Site Physical Address: _____

City: _____

Zip Code: _____

Staple Check In This Space

ATTACHMENT 1

Completing the Notice of Intent for Storm Water Discharges Associated with Construction Activity under the TPDES Construction General Permit (TXR150000)

A. Construction Site Operator Information

Check boxes and Customer Reference Number
These boxes designate the operator's status as a TCEQ "customer"—in other words, an individual or business that is involved in an activity that we regulate. We assign each customer a number that begins with "CN," followed by nine digits. ***This is not a permit number, registration number, or license number.*** In the remainder of this section, we will use "this customer" to mean the operator for Part A of the form.

- If this customer has not been assigned a Customer Reference Number or if this number is unknown, check "New" and leave the space for the Customer Reference Number blank.
- If this customer has already been assigned this number, enter the operator's Customer Reference Number and:
  - Check "No Change" if all the remaining customer information is the same as previously reported. However, you must still complete most blanks in this form for this notice of intent to be valid.
  - If this customer's information has changed since the last time it was reported to the TCEQ, check neither box and complete the remainder of this notice of intent.
- ***Do not enter a permit number, registration number, or license number in place of the Customer Reference Number.***

Name
Enter the legal name of this customer as authorized to do business in Texas. Include any abbreviations (LLC, Inc., etc.).

Mailing Address
Enter a central and general mailing address for this customer to receive mail from the TCEQ. For example, if this customer is a large company, this address might be the corporate or regional headquarters. On the other hand, for a smaller business, this address could be the same as the site address.

If this is a street address, please follow US Postal Service standards. In brief, these standards require this information in this order:

- the "house" number—for example, the 1401 in 1401 Main St
- if there is a direction before the street name, the one- or two-letter abbreviation of that direction (N, S, E, W, NE, SE, SW, or NW)
- the street name (if a numbered street, do not spell out the number—for example, 6th St, not Sixth St)
- an appropriate abbreviation of the type of street—for example, St, Ave, Blvd, Fwy, Exwy, Hwy, Cr, Ct, Ln
- if there is a direction after the street name, the one- or two-letter abbreviation of that direction (N, S, E, W, NE, SE, SW, or NW)
- if there is a room number, suite number, or company mail code

City, State, *and* ZIP Code
Enter the name of the city, the two-letter USPS abbreviation for the state (for example, TX), and the ZIP Code. (Enter the full ZIP+4 if you know it.)

Country Mailing Information
If this address is ***outside*** the United States, enter the territory name, country code, and any non-ZIP mailing codes or other non–U.S. Postal Service features here. If this address is ***inside*** the United States, leave these spaces blank.

Phone Number *and* Extension
This number should correspond to this customer's mailing address given earlier. Enter the area code and phone number here. Leave "Extension" blank if this customer's phone system lacks this feature.

Fax Number
This number should correspond to this customer's mailing address given earlier. Enter the area code and fax number here.

E-mail Address
As with the mailing address, this should be a general address that is appropriate for e-mail to this customer's central or regional headquarters, if applicable.

If "No Change" was checked for this customer, you may skip the rest of the fields in this part of the form and continue to the next part of the NOI.

Type of Operator
Check *only one* box.

Check ...	*if this customer*
Individual	is a person and has not established a business to do whatever causes them to be regulated by us.
Sole Proprietorship—D.B.A.	is a business that is owned by only one person and has not been incorporated. This business may: • be under the person's name • have its own name ("doing business as," or d.b.a.) • have any number of employees
Partnership	is a business that is established as a partnership as defined by the Texas Secretary of State's Office.
Corporation	meets all of these conditions: • is a legally incorporated entity under the laws of any state or country • is recognized as a corporation by the Texas Secretary of State • has proper operating authority to operate in Texas
Federal, state, county, or city government (as appropriate)	is either an agency of one of these levels of government or the governmental body itself (If a utility district, water district, tribal government, college district, council of governments, or river authority, check "Other" and write in the specific type of government.)
Other	fits none of the above descriptions. Enter a short description of the type of customer in the blank provided.

Independent Operator?
Check "No" if this customer is a subsidiary or part of a larger company. Otherwise, check "Yes."

Number of Employees
Check one box to show the number of employees for this customer's entire company, at all locations. ***This is not necessarily the number of employees at the site named in this NOI.***

Federal Tax ID
All businesses, except for some small sole proprietors, should have a federal taxpayer identification number (TIN). Enter this number here. Use no prefixes, dashes, or hyphens. Individuals and sole proprietors do not need to provide a federal tax ID.

State Franchise Tax ID
Corporations and limited liability companies that operate in Texas are issued a franchise tax identification number. If this customer is a corporation or limited liability company, enter this number here.

DUNS Number
Most businesses have a DUNS (Data Universal Numbering System) number issued by Dun and Bradstreet Corp. If this customer has one, enter it here.

B. Billing Address

We will mail the annual fee invoice for this site to the address entered in this section.

Name
Enter the legal name of the person or business to which we should mail this site's fee invoice each year.

Mailing Address
Enter the specific mailing address to which we should mail this site's fee invoice each year. If this is a street address, please follow the US Postal Service standards as described under "A. Construction Site Operator Information" on page 1 of these instructions.

City, State, *and* ZIP Code
Enter the name of the city, the two-letter USPS abbreviation for the state (for example, TX), and the ZIP Code. (Enter the full ZIP+4 if you know it.)

Country Mailing Information
If this address is ***outside*** the United States, enter the territory name, country code, and any non-ZIP mailing codes or other non–U.S. Postal

ATTACHMENT 1

Service features here. If this address is *inside* the United States, leave these spaces blank.

C. Project / Site Information

Check boxes *and* Regulated Entity Reference Number
These boxes designate this site's status as a TCEQ "regulated entity"—in other words, a location where an activity that we regulate occurs. We assign each regulated entity a number that begins with "RN," followed by nine digits. ***This is not a permit number, registration number, or license number.***

- If this site has not been assigned a Regulated Entity Reference Number or if this number is unknown, check "New" and leave the space for the Regulated Entity Reference Number blank.
- If this site has already been assigned this number, enter the Regulated Entity Reference Number and:
  - Check "No Change" if all the remaining information is the same as previously reported. However, even if there has been no change, you must complete this section at least through "E-mail Address" for this NOI to be valid.
  - If this site's information has changed since the last time it was reported to the TCEQ, check neither box and complete the remainder of this notice of intent.
- ***Do not enter a permit number, registration number, or license number in place of the Regulated Entity Reference Number.***

Name
Enter the name by which you want this site to be known to the TCEQ.

Mailing Address
Enter the specific mailing address for this site. If this is a street address, please follow the US Postal Service standards as described under "A. Construction Site Operator Information" on page 1 of these instructions. If the project / site's mailing address is the same as what is provided in Section A, you may enter "Same as Section A".

City, State, *and* ZIP Code
Enter the name of the city, the two-letter USPS abbreviation for the state (for example, TX), and the ZIP Code. (Enter the full ZIP+4 if you know it.)

Physical Address
Enter the physical address of the site itself. TCEQ staff should be able to use this address to find the site. Please follow the US Postal Service standards as described under "A. Construction Site Operator Information" on page 1 of these instructions. If the project / site does not have a physical address, enter "No Address".

City, County, *and* ZIP Code
Enter the name of the city, the county, and the ZIP Code. (Enter the full ZIP+4 if you know it.) This information must be provided even if you have entered "No Address" in the previous field.

Location Access Description
Enter a physical description of the location of the site based on highway intersections and/or permanent landmarks.

Latitude *and* Longitude
Enter the latitude and longitude of the site in *either* degrees, minutes, and seconds *or* decimal form.

For help obtaining the latitude and longitude, go to:
http://www.tnrcc.state.tx.us/gis/drgview.html

Standard Industrial Classification (SIC) Code and Activity Description

Provide the SIC code that best describes the construction activity being conducted at the site.

For help with SIC codes, go to:
http://www.osha.gov/oshstats/sicser.html

In addition to the SIC code, you must also provide a description of the construction activity being conducted at the site. This may include such descriptions as: "Apartment Building Construction" or "Shopping Center Construction."

Storm Water Pollution Prevention Plan
This plan identifies the areas and activities that could produce contaminated runoff at your site and then tells how you will ensure that this contamination is mitigated. For example, in describing your mitigation measures, your site's plan might identify the devices that collect and filter storm water, tell how those devices are to be maintained, and tell how frequently that maintenance is to be carried out. ***You must develop this plan before you complete this NOI.*** This plan must be available for a TCEQ investigator to review on request. Specific requirements for the development of the plan can be found in the *Texas Pollutant Discharge Elimination System Construction General Permit (TXR150000)*.

Estimated Area of Land Disturbed
Provide the approximate number of acres that the construction site will disturb. It is appropriate to enter a value less than 5, only if the project is part of a larger common plan that disturbs five or more acres. If the acreage is less than 1, enter 1. "Disturb" means any clearing, grading, excavating, or other similar activities.

Is the site located on Indian Country Lands?
Check "Yes" only if the site is on a reservation or other areas designated by the federal government as Indian Country Lands. If not, check "No."

Destination of Storm Water Discharge
The storm water from your site eventually reaches a receiving water body such as a local stream or lake, possibly via a drainage ditch. The discharge may initially be into a municipal separate storm sewer system (MS4). Check the appropriate boxes for whether storm water is discharged into an MS4. If you checked "Yes" to "An MS4?", then enter the name of the entity that operates the storm sewer—often a city, town, or utility district, but possibly another form of government.

You must also provide the name of the water body that receives the discharge from the construction site (a local stream or lake). Storm water may be discharged directly to a receiving stream or via a storm sewer system. If known, please include the segment number if the discharge is to a classified water body.

For a map that includes segment numbers, go to:
http://www.tnrcc.state.tx.us/water/quality/data/index.html

D. Contact

Give all the relevant information for the person whom TCEQ can contact if there are questions about any of the information on this form—perhaps the same person who completed the form.

E. Payment Information

Provide the number and account holder name from the check or money order used to pay the $100 application fee.

F. Certification

The operator must sign and date this statement to validate this NOI. Be sure to enter the full legal name of the person signing the form and the relevant title—for example, "Operator," "Vice-President," or "Partner." Use the "Prefix" blank for such titles as Dr., Mr., or Ms., as desired. Use the "Suffix" blank for such designations as Ph.D., Jr., Sr., III, or J.D., if applicable.

For a corporation, the application shall be signed by a responsible corporate officer. A responsible corporate officer means a president, secretary, treasurer, or vice-president of the corporation in charge of a principal business function, or any other person who performs similar policy or decision-making functions for the corporation; or the manager of one or more manufacturing, production, or operating facilities employing more than 250 persons or having gross annual sales or expenditures exceeding $25 million (in second-quarter 1980 dollars), if authority to sign documents has been assigned or delegated to the manager in accordance with corporate procedures. Corporate procedures governing authority to sign permit applications may provide for assignment or delegation to applicable corporate positions rather than to specific individuals.

For a partnership or sole proprietorship, the application shall be signed by a general partner or the proprietor, respectively.

For a municipality, state, federal, or other public agency, the application shall be signed by either a principal executive officer or a ranking elected official. For purposes of this application, a principal executive officer of a federal agency includes the chief executive officer of the agency, or a senior executive officer having responsibility for the overall operations of a principal geographic unit of the agency (e.g. regional administrator of the United States Environmental Protection Agency).

Questions?

If you have questions about any of the information on this form, contact our Storm Water Program at 512/239-4671 or look for "Storm Water" on our Web site:

www.tceq.state.tx.us

ATTACHMENT 2

CONSTRUCTION SITE NOTICE

FOR THE
Texas Commission on Environmental Quality (TCEQ)
Storm Water Program

TPDES GENERAL PERMIT TXR150000

The following information is posted in compliance with **Part II.D.2.** of the TCEQ General Permit Number TXR150000 for discharges of storm water runoff from construction sites. Additional information regarding the TCEQ storm water permit program may be found on the internet at:
www.tnrcc.state.tx.us/permitting/waterperm/wwperm/tpdestorm

Contact Name and Phone Number:	
Project Description: (Physical address or description of the site's location, estimated start date and projected end date, or date that disturbed soils will be stabilized)	
Location of Storm Water Pollution Prevention Plan :	

For Construction Sites Authorized Under Part II.D.2. (Obtaining Authorization to Discharge) the following certification must be completed:

I _____ (Typed or Printed Name Person Completing This Certification) certify under penalty of law that I have read and understand the eligibility requirements for claiming an authorization under Part II.D.2. of TPDES General Permit TXR150000 and agree to comply with the terms of this permit. A storm water pollution prevention plan has been developed and implemented according to permit requirements. A copy of this signed notice is supplied to the operator of the MS4 if discharges enter an MS4 system. I am aware there are significant penalties for providing false information or for conducting unauthorized discharges, including the possibility of fine and imprisonment for knowing violations.

_____ _____
Signature and Title Date

PAGE LEFT INTENTIONALLY BLANK

ATTACHMENT 3

TPDES OPERATOR'S INFORMATION

Owner's Name and Address: City of Houston

Mr. _____
(City Official)

_____
(Department)
P. O. Box 1562
Houston, Texas 77251-1562
(713) 247-1000

Contractors' Names and Addresses:

General Contractor: _____
_____
_____
_____

Telephone: _____

Site Superintendent: _____
_____
_____
_____

Telephone: _____

Erosion Control and
Maintenance Inspection: _____
_____
_____
_____

Telephone: _____

Subcontractors' Names and Addresses:

_____ _____
_____ _____
_____ _____
_____ _____

Phone: _____ Phone: _____

Note: Insert name, address, and telephone number of person or firms

PAGE LEFT INTENTIONALLY BLANK

ATTACHMENT 4

CONTRACTOR'S / SUBCONTRACTOR'S

CERTIFICATION FOR TPDES PERMITTING

I certify under penalty of law that I understand the terms and conditions of TPDES General Permit No. TXR150000 and the Storm Water Pollution Prevention Plan for the construction site identified as part of this certification.

Signature: _____

Name: (printed or typed) _____

Title: _____

Company: _____

Address: _____

Date: _____

Signature: _____

Name: (printed or typed) _____

Title: _____

Company: _____

Address: _____

Date: _____

Signature: _____

Name: (printed or typed) _____

Title: _____

Company: _____

Address: _____

Date: _____

PAGE LEFT INTENTIONALLY BLANK

ATTACHMENT 5

EPA NPDES Construction Inspection Form

The following inspection is being performed in compliance with Part IV.D.4. of the NPDES Region 6 Storm Water Construction General Permit [63 Fed. Reg. 36502] and being retained in accordance with Part V of the Permit. Qualified personnel (provided by the permittee or cooperatively by multiple permittees) shall inspect disturbed areas of the construction site that have not been finally stabilized, areas used for storage of materials that are exposed to precipitation, placement and effectiveness of structural control measures, and locations where vehicles enter or exit the site. Inspections shall be performed at least once every 14 days and within 24 hours of the end of a storm event of 0.5 inches or greater. Where sites have been temporarily stabilized, runoff is unlikely due to winter conditions, or during seasonal arid periods in arid areas (0-10 inches of rainfall annually) and semi-arid areas (10-20 inches annually) such inspections shall be conducted at least once every month. This form is primarily intended for use with construction projects in Texas and New Mexico. Permittees on Indian Country lands in Oklahoma, Louisiana and Arkansas and some oil and gas facilities in Oklahoma may use this form if they are eligible for this permit. Other facilities need to check with their NPDES authority before using this form.

If you do not know your NPDES Permit Number, contact the NOI Processing Center at (301)495-4145. This form was prepared as an example and it is not a required form for use with the permit. Alternative forms may be used if they contain all of the required information as set forth in the permit. This form and additional information regarding the NPDES Region 6 storm water program may be found on the Internet at http://www.epa.gov/region6/sw/. Any person with a complaint about the operation of this facility in regards to this permit should contact EPA Region 6 at (214)665-7112.

Permit Number(s) covered by this inspection (e.g. owners, developers, general contractor, builders)	
Signature and Certification in accordance with Part VI.G of the permit:	I certify under penalty of law that this document and all attachments were prepared under my direction or supervision in accordance with a system designed to assure that qualified personnel properly gathered and evaluated the information submitted. Based on my inquiry of the person or persons who manage the system, or those persons directly responsible for gathering the information, the information submitted is, to the best of my knowledge and belief, true, accurate, and complete. I am aware that there are significant penalties for submitting false information, including the possibility of fine and imprisonment for knowing violations. Signature_____Date_____
Date of Inspection	
Inspector Name	
Is there a copy of the permit language with the SWPPP?	❒ YES ❒ NO
Is the inspector qualified and are the qualifications documented in the SWPPP?	❒ YES ❒ NO
Is an NPDES storm water construction sign posted at the entrance for all permittees?	❒ YES ❒ NO

You may want to use EPA Region 6 construction checklist to assure components of the SWPPP are complete. This form, the construction sign, and the checklist are available on the Region 6 NPDES Storm Water Forms and Documents web page which may be found on the internet at http://www.epa.gov/earth1r6/6en/w/formsw.htm In addition to the checklist, you should provide a narrative (see next page) on the existing Best Management Practices and Structural Controls found during each inspection. Any problems identified in an inspection should be corrected within 7 days. The inspection should cover all components of the SWPPP and all potential pollutants. While eroded soil is the primary pollutant of concern, do not forget to inspect for other pollutant sources such as fuel tanks, paints, solvents, stabilization materials, concrete hardner, batch plants, and construction debris. The inspector will need to update the SWPPP to reflect findings of the inspection. The site map should be updated after an inspection to show controls that have been added or removed, to ensure the site map is kept current in accordance with Part IV.C. of the permit.

Revision 4, March 1, 2000

ATTACHMENT 5

Narrative Findings of the inspection:

Observations should include any findings of Best Management Practices or controls that are not in accordance with the SWPPP. If a control is not in place or failed, observe the reason why. A control removed temporarily for work is not necessarily a violation if properly recorded in the SWPPP. If it has been removed, record why it was removed and, if applicable, when it will be reinstalled. If the control has failed, observe the conditions so a conclusion may be made as to wether the control failed for improper maintenance or improper design. The qualified inspector will know when a failed control is inadequate and should be replaced by an improved control mechanism. Qualified inspectors are to have authority to make changes to the SWPPP to assure compliance. Controls that have not been installed should be given a reason why they are not installed and/or a scheduled date for installation if they are designed for a later phase of construction. After the inspection, the SWPPP and its site map should be updated to reflect current conditions of controls and Best Management Practices at the time of the inspection. This includes removing uninstalled controls from the site map or otherwise denoting on the site map if they are no longer installed if the controls have been removed because they are no longer necessary (e.g. stabilization has been achieved in that area).

ATTACHMENT 6

City of Houston

Storm Water Pollution Prevention Plan
Construction Site Inspection Report

TPDES/EPA Permit Number _____

COH Storm Water Quality Permit Number _____

DATE _____

No exceptions noted.

The following must be corrected prior to continuing work:

Public Notice improperly posted

Initial Construction Site Inspection Report information requires updating

Copy of NOI not on site

Storm water pollution prevention plan not on site

Erosion and sediment controls improperly installed

Erosion and sediment control devices improperly maintained

Fueling or washout areas not properly protected

Portocan or other sanitary facilities not properly protected

Self-inspection and maintenance records incomplete

Sediment from site outside area of construction

Other (see description below)

_____

_____

Please contact the Storm Water Quality Engineer at
611 Walker, RA-257, Houston TX 77002
713-837-7383 fax 713-837-0570

Once the above items have been corrected, call to arrange for reinspection. No further inspections for any construction related activity shall be made until the above items have been corrected.

_____	_____
Inspector's Signature	Contractor's Signature
_____	_____
Inspector's Name	Contractor's Name

not present

Distribution Stormwater Quality Engineer, Code Enforcement, Inspector, Operator
(Operator is Contractor)

Form _____ (10-01-01)

PAGE LEFT INTENTIONALLY BLANK

ATTACHMENT 7

Notice of Termination (NOT) for Storm Water Discharges Associated with Construction Activity under the TPDES Construction General Permit (TXR150000)

TCEQ Office Use Only
TPDES Permit Number: TXR15__|__|__|__|__| - NO
GIN Number: __|__ __|__ __|__|__|

For help completing this application, read the TXR150000 NOI Instructions (TCEQ-20023-Instructions).

A. TPDES Permit Number: TXR15_____

B. Construction Site Operator Customer Reference Number: CN _____
Name: _____
Mailing Address: _____
City: _____ State: -- _____ Zip Code: _____
Country Mailing Information (*if outside USA*) Territory: _____ Country Code: _____ Postal Code: _____
Phone Number: _____ Extension: _____ Fax Number: _____
E-mail Address: _____

C. Project / Site Information Regulated Entity Reference Number: RN _____
Name: _____
Physical Address: _____
Location Access Description: _____
City: _____ County: -- _____ Zip Code: _____

D. Contact - If the TCEQ needs additional information regarding this termination, who should be contacted?
Name: _____ Title: _____
Phone Number: _____ Extension: _____ Fax Number: _____
E-mail Address: _____

E. Certification
I certify under penalty of law that authorization under the TPDES Construction General Permit (TXR150000) is no longer necessary based on the provisions of the general permit. I understand that by submitting this Notice of Termination, I am no longer authorized to discharge storm water associated with construction activity under the general permit TXR150000, and that discharging pollutants in storm water associated with construction activity to waters of the U.S. is unlawful under the Clean Water Act where the discharge is not authorized by a TPDES permit. I also understand that the submittal of this Notice of Termination does not release an operator from liability for any violations of this permit or the Clean Water Act.

Construction Site Operator Representative:

Prefix: _____ First: _____ Middle: _____
Last: _____ Suffix: _____
Title: _____

Signature: _____ Date: _____

If you have questions on how to fill out this form or about the storm water program, please contact us at (512) 239-4671. Individuals are entitled to request and review their personal information that the agency gathers on its forms. They may also have any errors in their information corrected. To review such information, contact us at (512) 239-3282.

The completed NOT must be mailed to the following address:

Texas Commission on Environmental Quality
Storm Water & General Permits Team; MC - 228
P.O. Box 13087
Austin, Texas 78711-3087

TCEQ - 20023 (02/03) Page 1 of 1

PAGE LEFT INTENTIONALLY BLANK

ATTACHMENT 7

Completing the Notice of Termination for Storm Water Discharges Associated with Construction Activity under the TPDES Construction General Permit (TXR150000)

Who May File a Notice of Termination (NOT) Form
Permittees disturbing 5 acres or more (or part of a larger common plan of development or sale disturbing 5 acres or more) who are presently covered under the Texas Pollutant Discharge Elimination System (TPDES) Construction General Permit must submit a Notice of Termination (NOT) when final stabilization has been achieved on all portions of the site that is the responsibility of the permittee; or another permitted operator has assumed control over all areas of the site that have not been finally stabilized and all silt fences and other temporary erosion controls have either been removed, scheduled for removal as defined in the SWP3, or transferred to a new operator if the new operator has sought permit coverage. Erosion controls that are designed to remain in place for an indefinite period, such as mulches and fiber mats, are not required to be removed or scheduled for removal.

Final Stabilization occurs when either of the following conditions are met:

(a) All soil disturbing activities at the site have been completed and a uniform (e.g, evenly distributed, without large bare areas) perennial vegetative cover with a density of 70% of the native background vegetative cover for the area has been established on all unpaved areas and areas not covered by permanent structures, or equivalent permanent stabilization measures (such as the use of riprap, gabions, or goetextiles) have been employed.

(b) For individual lots in a residential construction site by either:

(1) the homebuilder completing final stabilization as specified in condition (a) above; or

(2) the homebuilder establishing temporary stabilization for an individual lot prior to the time of transfer of the ownership of the home to the buyer and after informing the homeowner of the need for, and benefits of, final stabilization.

(c) For construction activities on land used for agricultural purposes (e.g. pipelines across crop or range land), final stabilization may be accomplished by returning the disturbed land to its preconstruction agricultural use. Areas disturbed that were not previously used for agricultural activities, such as buffer strips immediately adjacent to a surface water and areas which are not being returned to their preconstruction agricultural use must meet the final stabilization conditions of condition (a) above.

A. TPDES Permit Number
Provide the TPDES permit number assigned to the operator of the construction site.

B. Construction Site Operator Information
Customer Reference Number
This number designates the operator's status as a TCEQ "customer"—in other words, an individual or business that is involved in an activity that we regulate. We assign each customer a number that begins with "CN," followed by nine digits. ***This is not a permit number, registration number, or license number.*** In the remainder of this section, we will use "this customer" to mean the operator for Part B of the form.

- If this customer has not been assigned a Customer Reference Number, leave the space for the Customer Reference Number blank.
- If this customer has already been assigned this number, enter the operator's Customer Reference Number.
- ***Do not enter a permit number, registration number, or license number in place of the Customer Reference Number.***

Name
Enter the legal name of this customer as authorized to do business in Texas. Include any abbreviations (LLC, Inc., etc.).

Mailing Address
Enter a central and general mailing address for this customer to receive mail from the TCEQ. For example, if this customer is a large company, this address might be the corporate or regional headquarters. On the other hand, for a smaller business, this address could be the same as the site address.

If this is a street address, please follow US Postal Service standards. In brief, these standards require this information in this order:

- the "house" number—for example, the 1401 in 1401 Main St
- if there is a direction before the street name, the one- or two-letter abbreviation of that direction (N, S, E, W, NE, SE, SW, or NW)
- the street name (if a numbered street, do not spell out the number—for example, 6th St, not Sixth St)
- an appropriate abbreviation of the type of street—for example, St, Ave, Blvd, Fwy, Exwy, Hwy, Cr, Ct, Ln
- if there is a direction after the street name, the one- or two-letter abbreviation of that direction (N, S, E, W, NE, SE, SW, or NW)
- if there is a room number, suite number, or company mail code

City, State, *and* ZIP Code
Enter the name of the city, the two-letter USPS abbreviation for the state (for example, TX), and the ZIP Code. (Enter the full ZIP+4 if you know it.)

ATTACHMENT 7

Country Mailing Information
If this address is ***outside*** the United States, enter the territory name, country code, and any non-ZIP mailing codes or other non–U.S. Postal Service features here. If this address is ***inside*** the United States, leave these spaces blank.

Phone Number *and* Extension
This number should correspond to this customer's mailing address given earlier. Enter the area code and phone number here. Leave "Extension" blank if this customer's phone system lacks this feature.

Fax Number
This number should correspond to this customer's mailing address given earlier. Enter the area code and fax number here.

E-mail Address
As with the mailing address, this should be a general address that is appropriate for e-mail to this customer's central or regional headquarters, if applicable.

C. Project / Site Information

Regulated Entity Reference Number
This number designates this site's status as a TCEQ "regulated entity"—in other words, a location where an activity that we regulate occurs. We assign each regulated entity a number that begins with "RN," followed by nine digits. ***This is not a permit number, registration number, or license number.***

- If this site has not been assigned a Regulated Entity Reference Number, leave the space for the Regulated Entity Reference Number blank.
- If this site has already been assigned this number, enter the Regulated Entity Reference Number.
- ***Do not enter a permit number, registration number, or license number in place of the Regulated Entity Reference Number.***

Name
Enter the name by which you want this site to be known to the TCEQ.

Physical Address
Enter the physical address of the site itself. TCEQ staff should be able to use this address to find the site.

Location Description
Enter a physical description of the location of the site based on highway intersections and/or permanent landmarks.

City, County, *and* ZIP Code
Enter the name of the city, the county, and the ZIP Code. (Enter the full ZIP+4 if you know it.)

D. Contact

Give all the relevant information for the person whom TCEQ can contact if there are questions about any of the information on this form—perhaps the same person who completed the form.

E. Certification

The operator must sign and date this statement to validate this NOI. Be sure to enter the full legal name of the person signing the form and the relevant title—for example, "Operator," "Operator's attorney," or "Senior Site Manager." Use the "Prefix" blank for such titles as Dr., Mr., or Ms., as desired. Use the "Suffix" blank for such designations as Ph.D., Jr., Sr., III, or J.D., if applicable.

For a corporation, the application shall be signed by a responsible corporate officer. A responsible corporate officer means a president, secretary, treasurer, or vice-president of the corporation in charge of a principal business function, or any other person who performs similar policy or decision-making functions for the corporation; or the manager of one or more manufacturing, production, or operating facilities employing more than 250 persons or having gross annual sales or expenditures exceeding $25 million (in second-quarter 1980 dollars), if authority to sign documents has been assigned or delegated to the manager in accordance with corporate procedures. Corporate procedures governing authority to sign permit applications may provide for assignment or delegation to applicable corporate positions rather than to specific individuals.

For a partnership or sole proprietorship, the application shall be signed by a general partner or the proprietor, respectively.

For a municipality, state, federal, or other public agency, the application shall be signed by either a principal executive officer or a ranking elected official. For purposes of this application, a principal executive officer of a federal agency includes the chief executive officer of the agency, or a senior executive officer having responsibility for the overall operations of a principal geographic unit of the agency (e.g. regional administrator of the United States Environmental Protection Agency).

Questions?

If you have questions about any of the information on this form, contact our Storm Water Program at 512/239-4671 or look for "Storm Water" on our Web site:

www.tceq.state.tx.us

Section 01422

REFERENCE STANDARDS

PART 1 GENERAL

1.01 SECTION INCLUDES

A. Section includes general quality assurance as related to Reference Standards and a list of references.

1.02 QUALITY ASSURANCE

A. For Products or workmanship specified by association, trade, or Federal Standards, comply with requirements of the standard, except when more rigid requirements are specified or are required by applicable codes.

B. Conform to reference standard by date of issue current on the date as stated in the General Conditions.

C. Request clarification from Project Manager before proceeding should specified reference standards conflict with Contract documents.

1.03 SCHEDULE OF REFERENCES

AASHTO	American Association of State Highway and Transportation Officials 444 North Capitol Street, N.W. Washington, DC 20001
ACI	American Concrete Institute P.O. Box 9094 Farmington Hills, MI 48333-9094
AGC	Associated General Contractors of America 333 John Carlyle Street Alexandria, VA 22314
AI	Asphalt Institute Research Park Drive P.O. Box 14052 Lexington, KY 40512

AITC	American Institute of Timber Construction 7012 S. Revere Parkway, Suite 140 Englewood, CO 80112
AISC	American Institute of Steel Construction One East Wacker Dr. Chicago, IL 60601
AISI	American Iron and Steel Institute 1101 17th Street NW, Suite 1300 Washington, DC 20036
ASME	American Society of Mechanical Engineers Three Park Avenue New York, NY 10016
ANSI	American National Standards Institute 1819 L Street NW Sixth Floor Washington, D.C. 20036
APA	American Plywood Association Box 11700 Tacoma, WA 98411
API	American Petroleum Institute 1220 L Street, N.W. Washington, DC 20005
AREA	American Railway Engineering and Maintenance-of-Way-Association 8201 Corporate Drive, Suite 1125 Landover, Maryland 20785
ASTM	American Society for Testing and Materials 100 Barr Harbor Drive West Conshohocken, PA 19428
AWPA	American Wood-Preservers' Association P.O. Box 5690 Granbury, TX 76049
AWS	American Welding Society 550 NW 42nd Avenue Miami, FL 33126

AWWA	American Water Works Association 6666 West Quincy Avenue Denver, CO 80235
COH	City of Houston P.O. Box 1562 Houston, TX 77251-1562
CLFMI	Chain Link Fence Manufacturers Institute 9891 Broken Land Parkway, Suite 300 Columbia, MD 21046
CRSI	Concrete Reinforcing Steel Institute 933 Plum Grove Road Schaumburg, IL 60173-4758
EJMA	Expansion Joint Manufacturers Association 25 North Broadway Tarrytown, NY 10591
FS	Federal Standardization Documents General Services Administration Specifications Unit (WFSIS) 7th and D Streets, S.W. Washington, DC 20406
ICEA	Insulated Cable Engineer Association P.O. Box 440 S. Yarmouth, MA 02664
IEEE	Institute of Electrical and Electronics Engineers 445 Hoes Lane P.O. Box 440 Piscataway, NJ 08855-459
ISA	International Society of Arboriculture P.O. Box 3129 Champaign, IL 61826-3129
MIL	Military Specifications General Services Administration Specifications Unit (WFSIS) 7th and D Streets, S.W. Washington, DC 20406

NACE	National Association of Corrosion Engineers 1440 South Creek Drive Houston, TX 77084-4906
NEMA	National Electrical Manufacturers' Association 1300 North 17th Street, Suite 1847 Rosslyn, VA 22209
NFPA	National Fire Protection Association 1 Batterymarch Park P.O. Box 9101 Quincy, MA 02269-9101
OSHA	Occupational Safety Health Administration U.S. Department of Labor Office of Public Affairs – Room N3647 Washington, DC 20210
PCA	Portland Cement Association 5420 Old Orchard Road Skokie, IL 60077-1083
PCI	Prestressed Concrete Institute 209 W. Jackson Blvd. Chicago, IL 60606
SDI	Steel Deck Institute P.O. Box 25 Fox River Grove, IL 60021
SSPC	Society for Protective Coatings (Steel Structures Painting Council) 40 24th Street, Sixth Floor Pittsburgh, PA 15222
TAC	Texas Administrative Code Texas Water Resources Conservation Commission P. O. Box 13087 Library MC-196 Austin, TX 78711-3087
TxDOT	Texas Department of Transportation 125 East 11th Street Austin, TX 78701-2483

UL	Underwriters' Laboratories, Inc. 333 Pfingston Road Northbrook, IL 60062
UNI-BELL	UNI-BELL Pipe Association 2655 Villa Creek Drive, Suite 155 Dallas, TX 75234

PART 2 P R O D U C T S - Not Used

PART 3 E X E C U T I O N - Not Used

END OF SECTION

Section 01450

CONTRACTOR'S QUALITY CONTROL

PART 1 G E N E R A L

1.01 SECTION INCLUDES

A. Quality assurance and control of Installation and manufacturers' field services and reports.

1.02 QUALITY ASSURANCE AND CONTROL OF INSTALLATION

A. Monitor quality control over Suppliers, manufacturers, Products, services, site conditions and workmanship, to produce work of specified quality at no additional cost to the City.

B. Comply fully with manufacturers' Installation instructions, including each step in sequence.

C. Request clarification from Project Manager before proceeding when manufacturers' instructions conflict with the Contract.

D. Comply with specified standards as minimum requirements for the Work except when more stringent tolerances, codes, or specified requirements indicate higher standards or more precise workmanship.

E. Perform the Work by persons qualified to produce a specified level of workmanship.

1.03 REFERENCES

A. Obtain copies of standards and maintain at job site when required by individual Specification sections.

1.04 MANUFACTURERS' FIELD SERVICES AND REPORTS

A. When specified in individual Specification sections, or as required by Project Manager, provide Product suppliers' or manufacturers' technical representative to observe site conditions, conditions of surfaces and Installation, quality of workmanship, start-up of equipment, operator training, testing, adjusting and balancing of equipment as applicable and to initiate required operation. Conform to minimum time requirements for start-up operations and operator training when provided in Specification sections.

B. At Project Manager's request, submit qualifications of manufacturers' representative to Project Manager 15 days in advance of required representatives' services. Representative is subject to approval by Project Manager.

C. Manufacturer's representatives shall report observations and site decisions or instructions given to applicators or installers that are supplemental or contrary to a manufacturer's written instructions. Submit report within 14 days of observation to Project Manager for review.

PART 2 P R O D U C T S - Not Used

PART 3 E X E C U T I O N - Not Used

END OF SECTION

Section 01452

INSPECTION SERVICES

PART 1 G E N E R A L

1.01 SECTION INCLUDES

A. Inspection services and references

1.02 INSPECTION

A. City Engineer will appoint an Inspector to represent the City and perform inspections, tests, and other services specified in individual Specification sections.

B. City Engineer may also appoint, employ, and pay an independent firm to provide additional inspection or construction management services as indicated in Section 01454 - Testing Laboratory Services.

C. The independent firm will submit reports to Project Manager, indicating observations and results of tests and indicating compliance or noncompliance with Contract requirements.

D. Contractor shall assist and cooperate with the Inspector; furnish samples of materials, design mix, equipment, tools, and storage.

E. Contractor shall notify Project Manager 24 hours prior to expected time for operations requiring services.

F. Contractor shall sign and acknowledge reports for Inspector.

PART 2 P R O D U C T S - Not Used

PART 3 E X E C U T I O N - Not Used

END OF SECTION

Section 01454

TESTING LABORATORY SERVICES

PART 1 G E N E R A L

1.01 SECTION INCLUDES

A. Testing laboratory services and Contractor responsibilities related to those services.

1.02 REFERENCES

A. ASTM C 1077 - Standard Practice for Laboratories Testing Concrete and Concrete Aggregates for Use in Construction and Criteria for Laboratory Evaluation.

B. ASTM D 3666 - Standard Specification for Minimum Requirements for Agencies Testing and Inspecting Bituminous Paving Materials.

C. ASTM D 3740 - Standard Practice for Minimum Requirements for Agencies Engaged in the Testing and/or Inspection of Soil and Rock as Used in Engineering Design and Construction.

D. ASTM E 329 - Standard Specification for Minimum Requirements for Agencies Engaged in the Testing and/or Inspection of Materials Used in Construction.

E. ISO/TEC Guide 25 - General Requirements for the Competence of Calibration and Testing Laboratories.

1.03 SELECTION AND PAYMENT

A. The City will select, employ, and pay for services of an independent testing laboratory to perform inspection and testing identified in Part 3 of individual Specification sections.

B. Contractor shall employ and pay for services of an independent testing laboratory or laboratories to perform inspection and testing identified in Part 2 of individual Specification sections.

C. Employment of a testing laboratory by the City shall not relieve Contractor of its obligation to perform work in accordance with requirements of Contract documents.

D. The City will deduct a minimum two-hour charge for testing laboratory time from periodic progress payment when operations requiring testing or inspection are canceled without prior notification.

E. The City will deduct cost of retesting from periodic progress payment whenever failed work is removed, replaced and retested.

1.04 QUALIFICATION OF LABORATORY

A. Meet laboratory requirements of ASTM E 329 and applicable requirements of ASTM C 1077, ASTM D 3666, and ASTM D 3740.

B. Meet ISO/TEC Guide 17025 conditions for accreditation by the American Association for Laboratory Accreditation (A2LA) in specific fields of testing required in individual Specification sections.

C. If laboratory subcontracts are part of the testing services, such work will be placed with a laboratory complying with the requirements of this Section.

1.05 LABORATORY REPORTS

A. Testing laboratory shall provide and distribute copies of laboratory reports to the distribution list Project Manager provides at the pre-construction conference.

B. Keep one copy of each laboratory report distributed or faxed at the site field office for duration of the Work.

C. Laboratory will fax material supplier, Contractor and Project Manager reports that indicate failing test results by no later than close of business on the working day following test completion and review.

1.06 LIMITS ON TESTING LABORATORY AUTHORITY

A. Laboratory may not release, revoke, alter, or enlarge requirements of the Contract.

B. Laboratory may not approve or accept any portion of the Work.

C. Laboratory may not assume Contractor duties.

D. Laboratory has no authority to stop the Work.

1.07 CONTRACTOR RESPONSIBILITIES

A. Provide safe access to the Work and to manufacturer's facilities for Project Manager and for testing laboratory personnel.

B. Provide testing laboratory with a copy of the Construction Schedule and a copy of each update to Construction Schedule.

C. Notify Project Manager and testing laboratory during normal working hours of the day previous to expected time for operations requiring inspection and testing services. When Contractor fails to make timely prior notification, do not proceed with the operations requiring inspection and testing services.

D. Notify Design Consultant 24 hours in advance when Specification requires presence of Design Consultant for sampling or testing.

E. Request and monitor testing as required to provide timely results and to avoid delays to the Work. Provide samples to laboratory in sufficient time to allow required test to be performed in accordance with specified test methods before intended use of the Product.

F. Cooperate with laboratory personnel in collecting samples on site. Provide incidental labor and facilities for safe access to the Work to be tested, to obtain and handle samples at site or at source of Products to be tested, and to facilitate tests and inspections including storage and curing of test samples.

G. Make arrangements with laboratory through Project Manager. Payment for additional testing will be made in accordance with Document 00700 - General Conditions:

1. Re-testing required for failed tests.

2. Re-testing for nonconforming work.

3. Additional sampling and tests requested beyond specified requirements.

4. Insufficient notification of cancellation of tests for work scheduled but not performed.

PART 2 P R O D U C T S - Not Used

PART 3 E X E C U T I O N

3.01 CONDUCTING TESTING

A Conform to laboratory sampling and testing methods specified in individual Specification sections to the latest issues of ASTM standards, TxDOT methods, or other recognized test standards as approved by Project Manager.

B Requirements of this Section shall also apply to those tests for approval of materials, for mix designs, and for quality control of materials as performed by employed testing laboratories.

END OF SECTION

Section 01502

MOBILIZATION

PART 1 GENERAL

1.01 SECTION INCLUDES

A. Mobilization of construction equipment and facilities onto the site.

1.02 MEASUREMENT AND PAYMENT

A. Unit Price Contracts. If Contract is Unit Price Contract, measurement for mobilization is on a lump sum basis.

B. Stipulated Price (Lump Sum) Contract. If Contract is Stipulated Price Contract, payment for Work in this Section is included in total Stipulated Price.

C. Mobilization payments will be included in monthly payment estimates upon written application by Contractor subject to the following provisions:

1. Authorization for payment of 50 percent of that portion of Contract Price designated for mobilization will be made upon receipt and approval by Project Manager of the following items, as applicable:

   a. Safety Program (Document 00700, Paragraph 10.1.1).

   b. Site Utilization Plan (Section 01145).

   c. Schedule of Values (Section 01292), if any.

   d. Initial Construction Photographs (Section 01321), if needed.

   e. Preliminary Construction Schedule and Billing Forecast (Section 01325).

   f. Construction Schedule (Section 01325 or Section 01326, as applicable).

   g. Submittal Schedule (Section 01330).

   h. Site specific Storm Water Pollution Prevention Plan (SWPPP) and Notice of Intent (NOI) along with storm water application fee (Section 01410), if required.

   i. Contractor's Quality Control Plan (Section 01450), if required.

j. Establishment of a Field Office for Project Manager meeting requirements of Section 01520 - Temporary Field Office.

k. Traffic Control Plan (Section 01555), if required.

l. Plan for Control of Ground and Surface Water (Section 01578), if required.

m. Project Signs Submittal (Section 01580).

n. Trench Safety Program (Section 02260), if required.

o. Dewatering plan, when required.

2. Authorization for payment of the balance of that portion of Contract Price designated for mobilization will be made upon completion of the Work amounting to five percent of Original Contract Price. The amount of Contract Price designated for mobilization may not be applied in computing whether or not five percent of the Original Contract Price has been obtained.

3. Mobilization payments will be subject to retainage amounts stipulated in Document 00700 – General Conditions.

PART 2 P R O D U C T S -Not Used

PART 3 E X E C U T I O N -Not Used

END OF SECTION

Section 01504

TEMPORARY FACILITIES AND CONTROLS

PART 1 GENERAL

1.01 SECTION INCLUDES

A. Temporary facilities and necessary controls for the Project, including utilities, telephone, sanitary facilities, storage sheds and building, safety requirements, first aid equipment, fire protection, security measures, protection of the Work and property, access roads and parking, environmental controls, pest and rodent control and disposal of trash, debris and excavated material.

B. Facilities and controls specified in this section are considered minimum for the Project. Provide additional facilities and controls for proper execution of the Work and to meet Contractor's responsibilities for protection of persons and property.

1.02 MEASUREMENT AND PAYMENT

A. UNIT PRICES

1. No separate payment will be made for any temporary facilities and controls required under this section. Include cost of such work in contract price listed for mobilization.

1.03 CONTRACTOR'S RESPONSIBILITY

A. Comply with applicable requirements specified in other sections of Specifications.

1. Maintain and operate temporary facilities and systems to assure continuous service.

2. Modify and extend systems as the Work progress requires.

3. Completely remove temporary materials and equipment when no longer required.

4. Restore existing facilities used for temporary services to specified or original condition.

PART 2 PRODUCTS - NOT USED

PART 3 EXECUTION

3.01 TEMPORARY UTILITIES

A. Obtaining Temporary Service:

1. Make arrangements with utility service companies for temporary services.

2. Abide by rules and regulations of the utility service companies or authorities having jurisdiction.

3. Be responsible for utility service costs until Date of Substantial Completion. Included are fuel, power, light, heat, and other utility services necessary for execution, completion, testing, and initial operation of work.

B. Water:

1. Provide water required for and in connection with work to be performed and for specified tests of piping, equipment, devices, or for other use as required for proper completion of the Work.

2. Water to be drawn from public fire hydrants. Obtain transit meter from City of Houston, Department of Public Works and Engineering, Taps and Meters Section. Pay required deposit based on rates established by latest ordinance.

3. Provide and maintain an adequate supply of potable water for domestic consumption by Contractor personnel, Project Manager and representatives of the City.

C. Electricity and lighting:

1. Provide electric power service required for the Work including required testing, lighting, operation of equipment, and other Contractor use.

2. Electric power service includes temporary power or generators required to maintain plant operations during scheduled shutdowns.

3. Minimum lighting level shall be 10 foot-candles for open areas; 20-foot-candles for stairs and shops. Provide a minimum of one 300-watt lamp for each 200 square feet of work area.

D. Temporary Heat and Ventilation:

1. Provide temporary heat necessary for protection or completion of the Work.

2. Provide temporary heat and ventilation to assure safe working conditions; maintain enclosed areas at a minimum of 50 degrees F.

E. Telephone:

1. Provide emergency telephone service at Project site for use by Contractor personnel and others performing work or furnishing services at the site.

2. Provide Houston-Metro lines, allowing unlimited calls, without charge in Greater Houston Metropolitan area with "call waiting" and "call forwarding" options. Provide one telephone answering machine with beeperless remote message retrieval capability.

F. Sanitary Facilities:

1. Provide and maintain sanitary facilities for persons on the site; comply with regulations of State and local departments of health.

2. Enforce use of sanitary facilities by construction personnel at site. Enclose sanitary facilities. Pit-type toilets are not permitted. No discharge will be allowed from these facilities. Collect and store sewage and waste so as not to cause nuisance or health problems. Haul sewage and waste off-site and properly dispose in accordance with applicable regulations.

3. Locate toilets near the Work site and secluded from view insofar as possible. Keep toilets clean and supplied throughout the course of the Work.

3.02 STORAGE SHEDS AND BUILDINGS

A. Provide adequately ventilated, watertight storage facilities with floor above ground level for Products susceptible to weather damage.

B. Storage of Products not susceptible to weather damage may be on blocks off the ground.

C. Store Products in a neat and orderly manner. Place Products to permit easy access for identification, inspection and inventory.

D. Fill and grade site for temporary structures to provide drainage away from temporary and existing buildings.

3.03 SAFETY REQUIREMENTS

A. Submit a safety program at the pre-construction meeting and follow the program in accordance with Document 00700 – General Conditions. Include documented response to trench safety requirements of Section 02260 - Trench Safety System.

B. Conduct operations in strict accordance with applicable Federal, State and local safety codes and statutes and with good construction practice. Establish and maintain procedures for safety of all work, personnel and equipment involved in the Work.

C. Observe and comply with Texas Occupational Safety Act (Art. 5182a, V.C.S.) and with all safety and health standards promulgated by Secretary of Labor under Section 107 of Contract Work Hours and Standards Act, published in 29 CFR Part 1926 and adopted by Secretary of Labor as occupational safety and health standards under Williams-Steiger Occupational Safety and Health Act of 1970, and to other legislation enacted for safety and health of Contractor employees. Safety and health standards apply to Subcontractors and Suppliers as well as to the Contractor.

D. Observance of and compliance with safety regulations is Contractor's responsibility without reliance or superintendence of or direction by Project Manager. Immediately advise Project Manager of investigation or inspection by Federal Safety and Health inspectors of Contractor's or Subcontractor's work or place of work on site under the Contract, and after investigation or inspection, advise Project Manager of results. Submit one copy of accident reports to Project Manager within 10 days of occurrence.

E. Protect areas occupied by workmen using the best available devices for detection of lethal and combustible gases. Test devices frequently to assure functional capability. Constantly observe infiltration of liquids into the Work area for visual or odor evidence of contamination, and immediately take appropriate steps to seal off entry of contaminated liquids to the Work area.

F. Implement safety measures, including but not limited to safety personnel, first-aid equipment, ventilating equipment and other safety equipment specified or detailed on Drawings.

G. Maintain required coordination with City Police and Fire Departments during entire period covered by the Contract.

H. Include Project safety analysis in safety plan. Itemize major tasks and potential safety hazards. Plan to eliminate hazards or protect workers and public from each hazard.

3.04 FIRST AID EQUIPMENT

A. Provide a first aid kit throughout the construction period. List telephone numbers for physicians, hospitals, and ambulance services in each first aid kit.

B. Have at least one person thoroughly trained in first aid and CPR procedures present on the site when work is in progress. Contractor to conform to protocols and requirements for training and protection against "blood borne pathogens".

3.05 FIRE PROTECTION

A. Conform to specified fire protection and prevention requirements established by Federal, State, or local governmental agencies and as provided in Safety Program.

3.06 SECURITY MEASURES

A. Protect the Work, materials, equipment, and property from loss, theft, damage, or vandalism. Protect City property used in performance of the Contract.

B. If existing fencing or barriers are breached or removed for purposes of construction, provide and maintain temporary security fencing equal to existing.

3.07 PROTECTION OF UTILITIES AND PIPELINES

A. Prevent damage to existing public utilities during construction. Approximate locations of known utilities are shown on Drawings, but all lines may not be shown. Excavate with caution and repair lines damaged by construction operations.

B. Use the Utility Coordinating Committee One Call System, telephone number, (713) 223-4567, which must be called 48 hours in advance. The toll free telephone number is 1-800-669-8344, Texas One Call System.

C. Before excavating, locate underground utilities by appropriate means including the use of metal detection equipment, and probes, or by excavation or surveys. Repair damage caused by investigative work and by failure to locate or to preserve underground utilities.

D. Give utility owners a minimum five days notice before commencing excavation to allow time to locate utilities and make adjustments or

relocations when they conflict with the Work. Include cost for temporary relocation of water, wastewater, and storm drainage lines, necessary to accommodate construction, in unit prices for utility construction unless otherwise noted. Bypassing of sanitary waste to storm drainage facilities is not allowed.

E. Prior to excavation near pipelines, request a representative of the pipeline company to meet with Contractor and Project Manager at the site to discuss procedures to be used. Request pipeline company's representative to locate the pipelines in at least three locations: at each side and at centerline of proposed excavation of proposed utility. Also request representative and Project Manager to be present to observe Contractor operations when excavation is conducted within 15 feet of pipeline.

F. Utility service lines are not shown on the construction document drawings. Contractor should anticipate that such service lines exit and should exercise extreme caution during construction. The utility service lines should be repaired and restored immediately as per the specification, if damaged due to any construction activities. No separate payment will be made for this repair and restoration work. Include payment in unit price for work in appropriate sections.

G. Prior to abandonment of utility, make appropriate arrangements with City and owner of utility to terminate service, remove meters, tranformers, and poles as may be required by site conditions.

3.08 PROTECTION OF THE WORK AND PROPERTY

A. Preventive Actions

1. Take necessary precautions and actions to prevent damage, injury, or loss to the Work or public and private property, including:

a. Storage of apparatus, supplies, and Products in an orderly, safe manner to limit interference with progress of the Work or work of other contractors, utility service companies, or the City's operations.

b. Suitable storage for Products subject to damage by exposure to weather, theft, breakage, etc.

c. Limitation of loading pressures imposed upon portions of the Work.

d. Frequent clean up of refuse, scrap materials, and debris from construction operations, necessary to maintain the site in a safe and orderly condition.

e. Provision of barricades and guard rails to protect pedestrian and traffic around openings, scaffolding, temporary stairs and ramps, excavations, elevated walkways, and other hazardous areas.

2. Protect public and private property adjacent to the site. Obtain written consent before entering or occupying privately-owned land except on easements provided for construction. Restore property damaged by construction operations to condition equal to or better than that existing before the damage.

B. Barricades and Warning Systems

1. Where work is performed on or adjacent to roadways, rights-of-ways, or public land, provide barricades, fences, lights, warning signs, danger signals, and other precautionary measures necessary for protection of persons or property and for protection of the Work.

a. Erect sufficient barricades to keep vehicles and pedestrians from entering the Work. Paint barricades to be visible at night. From sunset to sunrise, provide at least one light at each barricade.

b. Maintain barricades, signs, lights, and provide watchmen until Project Manager approves removal. Whenever work creates encroachment onto public roadways, station flagmen to manage traffic flow in accordance with approved traffic control plan.

c. Conform to requirements of section 01555 – Traffic Control and regulation.

C. PROTECTION OF EXISTING STRUCTURES

1. Underground Facilities

a. Known Underground Facilities are shown on the Drawings but all Facilities may not be shown. Explore sufficiently ahead of trenching and excavation work to locate Underground Facilities in order to prevent damage to them and to prevent interruption of utility services. Restore damage to Underground Facilities to original condition at no additional cost to the City.

b. If necessary to avoid unanticipated Underground Facilities, Project Manager may make changes in location of the Work.

c. If permanent relocation of an Underground Facility is required

and not provided for in the Contract documents, City Engineer will direct Contractor in writing to perform the Work under Modification provisions in Document 00700 - General Conditions.

2. Surface Structures include buildings, tanks, walls, bridges, roads, dams, channels, open drainage, piping, poles, wires, posts, signs, markers, curbs, walks, guard cables, fencing, and other facilities that are visible above the ground level.

3. Protection of Underground Facilities and Surface Structures:

   a. Support in place and protect Underground Facilities and Surface Structures located within or adjacent to the limits of the Work from damage. Install supports as required by the owner of the structure. Satisfy Project Manager that the owner of the facility or structure has approved methods and procedures before installing structure supports.

   b. Avoid moving or changing public utility or private corporation property without prior written consent of a responsible official of the facility or structure. Allow representatives of utilities to enter the construction site for maintenance and repair purposes or to make necessary changes.

   c. Notify utility and pipeline owners and operators of the nature of construction operations and dates when operations will be performed. When construction operations are required in immediate vicinity of existing structures, pipelines, or utilities, give a minimum of five working days advance notice. Probe and flag location of Underground Facilities prior to commencement of excavation. Keep flags in place until construction operations uncover the facility.

   d. Assume risk for damages and expenses to Underground Facilities and Surface Structures within or adjacent to the Work.

D. Employ a structural engineer to ensure protection measures are adequate for the safety and integrity of structures and facilities.

E. PROTECTION OF INSTALLED PRODUCTS:

1. Provide protection of Installed Products to prevent damage from subsequent operations. Remove protection facilities when no longer needed, prior to completion of the Work.

2. Control traffic to prevent damage to Products and surfaces.

3. Provide coverings to protect Products from damage. Cover projections, wall corners, jambs, sills, and exposed sides of openings in areas used for traffic and passage of materials in subsequent work.

3.09 ROADS AND PARKING

A. Prevent interference with traffic and operations of the City on existing roads.

B. Designate temporary parking areas to accommodate construction and City personnel. When site space is not adequate, provide additional off-site parking. Locate as approved by Project Manager.

C. Minimize use by construction traffic on existing streets and driveways.

D. Do not allow heavy vehicles or construction equipment in existing parking areas.

3.10 ENVIRONMENTAL CONTROLS

A. Use methods, equipment, and temporary construction necessary for control of environmental conditions at the site and adjacent areas.

B. Comply with statutes, regulations, and ordinances relating to prevention of environmental pollution and preservation of natural resources including National Environmental Policy Act of 1969, PL 91-190, Executive Order 11514.

C. Minimize impact to the surrounding environment. Do not use construction procedures that cause unnecessary excavation and filling of terrain, indiscriminate destruction of vegetation, air or stream pollution, or harassment or destruction of wildlife.

D. Limit disturbed areas to boundaries established by the Contract. Do not pollute on-site streams, sewers, wells, or other water sources.

E. Do not burn rubbish, debris or waste materials.

3.11 POLLUTION CONTROL

A. Provide methods, means, and facilities necessary to prevent contamination of soil, water or the atmosphere by discharge of Pollutants from construction operations.

B. Provide equipment and personnel to perform emergency measures to contain spillage, and to remove contaminated soils or liquids. Excavate and dispose of contaminated earth off-site in accordance with laws and regulations, and

replace with suitable compacted fill and topsoil.

C. Provide systems necessary for control of Pollutants.

1. Prevent toxic concentrations of chemicals.

2. Prevent harmful dispersal of Pollutants into the environment.

D. Use equipment that conforms to current Federal, State, and local laws and regulations.

3.12 PEST AND RODENT CONTROL

A. Provide rodent and pest control as necessary to prevent infestation of construction or storage areas.

B. Employ methods and use materials that will not adversely affect conditions at site or on adjoining properties.

3.13 NOISE CONTROL

A. Provide vehicles, equipment, and use construction activities that minimize noise to the greatest degree practicable. Conform to noise levels of Chapter 30 –Noise and Sound Level Regulation, City Code of Ordinances, and latest OSHA standards. Do not permit noise levels to interfere with the Work or create a nuisance to surrounding areas.

B. Conduct construction operations during daylight hours except as approved by Project Manager.

C. Select construction equipment that operates with minimum noise and vibration. When directed by Project Manager, correct objectionable noise or vibration produced by operation of equipment at no additional cost to the City. Sound Power Level (PWL) of equipment shall not exceed 85 dbA (re: 10^{-12} watts) measured five feet from the equipment, or at a lower level if prescribed by City Ordinances. Equipment noise requirements are contained in equipment specifications.

3.14 DUST CONTROL

A. Use water or other methods approved by Project Manager to control amount of dust generated by vehicle and equipment operations.

3.15 WATER RUNOFF AND EROSION CONTROL

A. Comply with requirements of section 01410 – TPDES Requirements.

B. Conduct fill, grading and ditching operations and provide adequate methods necessary to control surface water, runoff, subsurface water, and water from excavations and structures in order to prevent damage to the Work, the site, or adjoining properties.

1. Plan and execute construction and earthwork by methods that control surface drainage from cuts and fills, and from borrow and waste disposal areas.

2. Minimize area of bare soil exposed at one time.

3. Provide temporary control measures, such as berms, dikes, and drains.

4. Provide, operate, and maintain equipment and facilities of adequate size to control surface water.

5. Construct fill and waste areas by selective placement of materials to eliminate erosion of surface silts or clays that may erode.

6. Direct water away from excavations, pits, tunnels, and other construction areas to prevent erosion, sedimentation or damage.

7. Maintain existing drainage patterns adjacent to the site by constructing temporary earth berms, sedimentation basins, retaining areas, and temporary ground cover.

8. Dispose of drainage water in a manner to prevent flooding, erosion, or other damage to the site or adjoining areas, in conformance with environmental requirements.

9. Inspect earthwork periodically to detect any evidence of erosion. Take corrective measures as required to control erosion.

END OF SECTION

Section 01506

DIVERSION PUMPING

PART 1 G E N E R A L

1.01 DEFINITIONS

A. Diversion-pumping: Installation and operation of bulkheads, plugs, hoses, piping, and pumps required to maintain sewer flow and prevent backups and overflows.

1.02 SYSTEM DESCRIPTION

A. Provides continuous sewer service to users of sewer systems while maintenance or construction operations are in progress, by diverting flow around construction locations. Maintain sewer flow to prevent backup or overflow onto streets, yards and unpaved areas or into buildings, adjacent ditches, storm sewers, and waterways. Do not divert sewage outside of sanitary sewer system.

B When pumps are operating, have an experienced operator on site to monitor operation, adjust pumps, make minor repairs to system, and report problems.

1.03 SUBMITTALS

A. Conform to requirements of Section 01330 - Submittals Procedures.

B. For systems that bypass sanitary sewer line segments of 42-inch diameter or larger, submit a Diversion Pumping Plan prior to installation. Show location, number and size of pumps, number, location, size and type of hoses or rigid piping, and location of downstream discharge; and special features where pipes or hoses cross roadways, temporary trenches, support bridges.

1.04 SCHEDULING

A. When the City operates or maintains diversion pumping in construction areas, coordinate construction activities with Project Manager.

B. Cease operation of diversion pumping when approved by Project Manager.

PART 2 PRODUCTS

2.01 MATERIALS

A. Design piping, joints and accessories to withstand at least twice maximum system pressure or 50 psi, whichever is greater.

B. Use self-priming type or submersible electric pumps, with a working pressure gauge on the discharge. Pumps shall meet requirements of City of Houston Noise and Sound Level Regulations.

PART 3 EXECUTION

3.01 FIELD QUALITY CONTROL

A. During diversion pumping, do not allow sewage to leak, dump, or spill into or onto areas outside of existing sanitary sewer systems.

B. In the event of an accidental spill or overflow, immediately stop discharge and take action to clean up and disinfect spill. Promptly notify Project Manager so required reporting can be made to the Texas Commission on Environmental Quality (TCEQ) and the Environmental Protection Agency (EPA).

3.02 CLEANING

A. When diversion-pumping operations are complete, drain sewage within piping into sanitary sewers prior to disassembly.

END OF SECTION

Section 01520

TEMPORARY FIELD OFFICE

PART 1 GENERAL

1.01 SECTION INCLUDES

A Temporary field office building and associated parking area.

1.02 FACILITY DESCRIPTION

A Temporary field office to be utilized by authorized representatives of the City to coordinate and monitor daily construction activities performed by Contractor.

B. Field office shall be a non-smoking facility.

PART 2 PRODUCTS

2.01 FIELD OFFICE

A General:

1. Locate office in vicinity of the Work at a location approved by Project Manager or where indicated on Drawings.

2. Furnish, Install and maintain field office for exclusive use of authorized representatives of the City. Provide sufficient room for Project meetings and Inspector's office.

3. Provide office within 10 days of Date of Commencement of the Work.

4. Construct two all-weather, hard surfaced parking spaces for exclusive use of authorized representatives of the City. Provide all-weather surfaced walk between parking spaces and field office.

B. Minimum Construction:

1 Structurally sound foundation and superstructure.

Weather tight with insulated roof, walls and 7-foot ceiling (minimum).

3. Stairs or walkway with handrail and covered entrance platform (minimum 4 feet by 4 feet) with mud scraper at door.

4. Resilient floor covering.

5. Screened windows with area equal to approximately 10 percent of floor area sufficient for light, view of the site, and ventilation. Provide each window with operable sash and burglar bars.

6. Secure exterior doors with dead-bolt cylinder locks and burglar bars.

C. Minimum Services:

1. Exterior entrance light.

2. Interior lighting of 75 foot-candles minimum at desktop height

3. Automatic heating to maintain 65 degrees F in winter.

4. Automatic cooling to maintain 75 degrees F in summer.

5. Electric power service.

6. Three telephone service lines one for voice, one for data, and one for fax, for exclusive use of authorized representatives of the City.

7. Sanitary facilities in field office with one water closet, one lavatory, and one medicine cabinet for exclusive use of authorized representatives of the City.

D. Minimum Furnishings:

1. One 5-drawer desk

2. Two swivel desk chairs with casters.

3. One plan table.

4. One drawing plan rack.

5. One 4-drawer legal file cabinet complete with fifty legal-size hanging folders and two full-sized carriers.

6. One marker board with cleaner and markers.

7. Two waste baskets.

8. One 30-inch by 36-inch tack board.

9. One all-purpose fire extinguisher.

10. Six protective helmets (hard hats) with ratchet adjustment for exclusive use of authorized representatives of the City.

11. Conference table and chairs to accommodate 10 persons.

12. All in one printer, copier, plain paper fax machine.

13. Telephone instrument separate from fax machine.

E. Provide adequate space for one set of Contract documents for ready reference.

PART 3 E X E C U T I 0 N

3.01 MAINTENANCE

A Maintain all-weather surface driveway and parking areas, buildings, walkways, stairs and required furnishings and equipment for duration of the Contract.

B. Provide janitorial services for duration of the Contract consisting of twice weekly sweeping and mopping floors, trash removal, weekly restroom cleaning, and weekly dusting of furniture and equipment.

C. Provide soap, paper towels, toilet paper, cleansers and other necessary consumables.

D. Immediately repair damage, leaks or defective service.

3.02 PROJECT CLOSEOUT

A Remove temporary field office and signs and restore site as specified in Section 01770 - Closeout Procedures.

END OF SECTION

Section 01562

TREE AND PLANT PROTECTION

PART 1 GENERAL

1.01 SECTION INCLUDES

A. Tree and plant protection.

B. Minimum qualifications of Arborist and Urban Forester.

1.02 MEASUREMENT AND PAYMENT

A. Payment for Tree Protection, including tree pruning or tree removal, shall be paid as a Lump Sum basis that shall include all items specified in this section unless payment is specified otherwise in this section

B Payment for Zero Curb Cutback will be on a per linear foot basis.

C. Payment for Checker Plate will be on a square foot basis.

D. Refer to Section 01270-Measurement and Payment for unit price procedures.

1.03 SUBMITTALS

A. Conform to requirements of Section 01330 – Submittal Procedures.

B. Submit name and experience of qualified Arborist, proposed for use on the Work, to Project Manager.

1.04 PROJECT CONDITIONS

A. Preserve and protect existing trees and plants to remain from foliage, branch, trunk, or root damage that could result from construction operations.

B. Prevent following types of damage:

1. Compaction of root zone by foot or vehicular traffic, or material storage.

2. Trunk damage from equipment operations, material storage, or from nailing or bolting.

3. Trunk and branch damage caused by ropes or guy wires.

4. Root or soil contamination from spilled solvents, gasoline, paint, lime slurry, and other noxious materials.

5. Branch damage due to improper pruning or trimming.

6. Damage from lack of water due to:

   a. Cutting or altering natural water migration patterns near root zones.

   b. Failure to provide adequate watering

7. Damage from alteration of soil pH factor caused by depositing lime, concrete, plaster, or other base materials near roots zones.

8. Cutting of roots larger than one inch in diameter.

1.05 DAMAGE ASSESSMENT

A. When trees other than those designated for removal are destroyed or damaged as result of construction operations, remove and replace with same size, species, and variety up to and including 8 inches in trunk diameter. Trees larger than 8 inches in diameter shall be replaced with an 8 inch diameter tree of the same species and variety and total contract amount will be reduced by an amount determined from the following formula and paid to Tree Fund 0.7854 x D2 x $13.25 where D is diameter in inches of tree or shrub trunk measured 12 inches above grade for that portion of the tree which is greater than 8 inches in diameter. A permit must be applied for and approved by the City of Houston, Urban Forestry Division prior to removal of any tree not scheduled for removal in the tree treatment schedule. Contractor shall contact City of Houston, Urban Forestry, at 832-395-8459 to apply for tree removal permit when needed.

PART 2 PRODUCTS

2.01 MATERIALS

A. Pruning Paint: Black latex, water based paint, free of all petroleum products.

B. Fertilizer: Fertilizer shall be a root stimulant that contains at a minimum the following ingredients: Ectomycorrhizal Fungi, VA Mycorrhizal (VAM) Fungi, Rhizosphere Bacillus spp., Kelp Meal Humic Acid, and Soluble Yucca.

C. Tree Protection Fencing: Orange, plastic mesh fenching, 4 feet in height with 6 feet high "t" bar posts installed 10 feet on centers as per drawings.

D. Plastic Root/Soil Protection: Clear polyethylene sheeting, minimum 6 mil, thickness.

PART 3 EXECUTION

3.01 PROTECTION OF EXISTING TREES AND SHRUBS

A. Site preparation work and/or construction work shall not begin in any area where tree preservation measures have not been completed and approved.

B. Protect exposed roots and root zone areas from contamination from stabilization materials and concrete using polyethylene.

C. Cover exposed roots within 4 hours to reduce damage caused by desiccation. Roots may be covered with soil, mulch, polyethylene, or wet burlap to help protect them from drying.

D. Designate limited areas as concrete washout areas. Locate concrete washout areas away from root zones.

E. Install root pruning trenching where designated in tree treatment schedule and shown on the tree protection drawings. Trees scheduled for root pruning are called out specifically in the treatment schedule. Trench shall be located 2 ft. from the edge of proposed waterline or sanitary sewer for trees called out for root pruning for water or fittings, or sanitary sewer in the treatment schedule, 2 ft. from edge of proposed storm sewer pipe for trees called out for root pruning for storm in the treatment schedule, 30" back of proposed curb for trees called out for root pruning for street, and at edge of sidewalk for trees called out for root pruning for sidewalk. Root pruning shall not be performed where there is not adequate space to be located sufficiently away from tree to prevent damage. All pruning must be evaluated by Contractor's Certified Arborist and reviewed and approved by City Forester before being performed. Trench locations shown on tree preservation plan are drawn to scale and should be located in field as drawn on plan. Exact locations shall be approved in the field by engineer and/or project urban forester prior to installation. Trenching depth shall be a minimum of 2 ft. deep and a maximum of 6 inches wide for water, fittings, sanitary sewer, storm, and street. Trenching depth shall be to the anticipated bottom of sidewalk and base material for sidewalk root pruning, roots lower than sidewalk shall not be pruned. All roots shall be cut by trencher, chainsaw, or handsaw to the specified depth. Roots shall be cut cleanly, and or not ripped, torn, or chopped. Trench shall be backfilled and compacted immediately after trenching. Trench shall be installed prior to any clearing and grubbing, excavation for underground, or any other site work.

F. Install tree protection fencing around each tree to be preserved as indicated in the tree treatment schedule and on the tree protection plan.

1. Each tree to be preserved shall be protected with a tree protection fence. The fencing shall be continuous between posts, shall be pulled taut prior to securing to posts, and shall be firmly attached to the posts with a minimum of 4 wire ties.

2. All tree protection fencing shall be installed prior to site work or construction activity. The fence shall be placed in a continuous alignment as shown on the tree protection plan. Fences shown on tree protection plan are drawn to scale and shall be installed as drawn, in the field. In general fences shall be placed 30" back of existing curb or edge of pavement where root pruning or zero curb cutback is not specified, and 6" back of root pruning trench where root pruning is specified and immediately back of curb where zero curb cutback is specified. Exact locations shall be approved by the project urban forester and/or engineer in the field. The Fences shall be placed to protect roots, trunks, and foliage. The contractor shall not remove or relocate tree protection fencing and shall not operate within the limits shown without direct approval of the project urban forester. In areas where the proposed waterline is located in the existing road side ditch and where tree protection fencing can not be installed across the ditch, the fencing shall be installed at the top of outside ditch bank and no bore pits, peep holes, service taps, or any excavation should occur in the area immediately in front of the tree protection fencing for trees called out with "bore" in the Tree Treatment Schedule. The "bore" limits shall be the same as the limits of the tree protection fencing.

3. Storage of equipment or materials will not be allowed inside a fence. Entryways and access into a protected area shall not be provided unless approved by the project urban forester.

4. Damage to tree fences occurring during the progress of the work shall be repaired immediately at no additional cost to owner. Workmen shall be clearly instructed to exercise caution in performance of work near trees being preserved.

5. Tree protection fencing shall be removed by contractor, at no additional costs, upon completion of all construction activity in each work zone area. Tree protection fencing materials used in the first two work zone areas shall be removed and utilized in subsequent work zone areas. Materials and labor shall be paid for each linear foot of fencing installed in first two work areas. All fencing installed in subsequent work zone areas shall be paid for labor only.

G. Boring/Auguring of water lines or sanitary sewer lines

1. Water line or sanitary sewer line shall be bored/augured/ horizontally drilled under

critical root zones areas of trees designated with auger or bore in the tree treatment schedule. The entire area protected with tree protection fencing shall be bored. No bore pits, come through holes, peep holes, push pits, or long or short side service taps shall be allowed in the areas protected by tree protection fencing. The tree protection plan takes into consideration the limits of augering equipment, there should be room for adequately spaced bore pits, peep holes, come through holes, and push pits. Any changes to the location of the tree protection fencing shall be authorized by the project Urban Forester and City Engineer.

H. Hand digging of Service taps and leads

1. Trees called out for Hand dig short side service tap are located in very close proximity to existing short side water meters. Excavating the service tap with machinery would significantly impact the tree and be in violation of the City of Houston's Street Tree Ordinance. These short side service taps shall be excavated with manual labor to expose any roots 1" in diameter and larger. The first 24" of excavation shall be completed manually to expose the roots. Any root 1" in diameter and larger shall remain undamaged, the roots shall not be cut , nor shall the bark and cambium layer be scraped or damaged. Once the roots are exposed, if there is adequate room to utilize a mini-excavator without damaging the roots, the mini-excavator can be utilized to complete the excavation down to the water line. 1" plywood shall be placed on grade to provide root protection in the area of access of the mini-excavator. If roots 1" diameter or larger are cut or damaged, responsible party will be subject to a citation under the Street Tree Ordinance, and may also be required to incur the cost of tree removal and replacement of damaged tree on an inch for inch basis, if required by City of Houston Urban Forestry Division.

2. Trees called out for Hand dig short side or long side service lead are located in very close proximity to existing water meters. Excavating the service lead with machinery would significantly impact the tree and be in violation of the City of Houston's Street Tree Ordinance. Short side leads shall be excavated with manual labor to expose any roots 1" in diameter and larger from the service tap of the meter. Come out hole and excavation required for long service leads shall be excavated with manual labor to expose roots 1" in diameter and larger, from the come out hole to the meter. In each case, all roots 1" in diameter and larger shall remain undamaged, the roots shall not be cut, nor shall the bark and cambium layer be scraped or damaged. If roots 1" diameter or larger are cut or damaged, responsible party will be subject to a citation under the cost of tree removal and replacement of damaged tree on an inch by inch basis, if required by City of Houston Urban Forestry Division.

3. Trees called out for Hand dig sanitary stub up are located in very close proximity to proposed service lead. Excavating the service lead with machinery would significantly impact the tree and be in violation of the City of Houston's Street Tree

Ordinance. Excavation for sanitary stub up shall be completed with manual labor to expose any roots 1" in diameter and larger. The lead shall be bored from face of curb to stub up hole when called out in the tree treatment schedule. Come out and stub up holes shall be excavated with manual labor to expose roots 1" in diameter and larger. In case, all roots 1" in diameter and larger shall remain undamaged, the roots shall not be cut, nor shall the bark and cambium layer be scraped or damaged. If roots 1" diameter or larger are cut or damaged, responsible party will be subject to a citation under the Street Tree Ordinance, and may be required to incur the cost of tree removal and replacement of damaged tree on an inch by inch basis, if required by City of Houston Urban Forestry Division.

4. Long side service taps shall not be located in an area specified to be bored in the tree treatment schedule. Should it be absolutely necessary to locate a long side service tap in an area specified to be bored, the excavation shall be completed as specified in paragraph 1 of this section-Hand digging short side service taps.
5. All water meters and sanitary service leads called out on P&P drawings and visible in the field have been addressed in the Tree Protection Plan. Should any additional meters or lead be found during construction, or in any new meters or leads installed beneath the canopy of any tree, fenced for tree protection, the excavation shall be completed as specified in paragraph 1 and/or 2 of this section and paid for at the unit cost for each included in contract.

I. Pruning of Trees

1. Trees shall be pruned in accordance with the American National Standard for tree pruning, ANSI A300 (Part 1) – 2001 Pruning Revision of ANSI A300-1995 Tree, Shrub and Other Woody Plant Maintenance – Standard Practices. Pruning shall be completed by professional arborists who has received training in proper pruning techniques.

2. Clearance prune designated trees for public streets, sidewalks, and construction areas. Provide minimum 14 feet and maximum of 18 feet of vertical clearance over proposed water trunk lines. Provide minimum of 14 feet and maximum of 16 feet of vertical clearance over proposed street construction, from 24" back of curb on one side to 24" back of curb on the other side. Provide 20' of vertical clearance over proposed storm sewer up to 38" in size, and 30' of vertical clearance for storm sewer larger than 38" in size. Pruning to be installed prior to any construction activity. Contractor shall notify property owner prior to trimming or pruning any trees with trunks located on private property. Exceptions will be made for trees determined to be arboriculturally significant by City of Houston Urban Forestry. Pruning of trees identified will be completed with approval and supervision of City of Houston Urban Forestry.

3. All cuts should be made sufficiently close to the parent limb or trunk without cutting into the branch collar or leaving a protruding stub, so that closure can readily start under normal conditions. All lateral cuts shall be made to a lateral that is least 1/3 the diameter of the parent limb. Clean cuts shall be made at all times.

4. Trees shall be pruned in a manner that will not destroy or alter the natural shape and character of the tree. Apply black latex paint to all fresh wounds on Oak (Quercus) species immediately after each cut is made.

5. Crown cleaning prune designated trees shall include selective removal of dead, diseased, and/or broken limbs.

J. Tree Removal

1. Trees scheduled for removal shall be sawed down and debris hauled from the site the same day. The stump shall be ground to 6" below grade and excess grindings shall be hauled from the site the same day, so that a pile of grindings is not left where the stump was ground. Enough grindings should be left so that an open hole does not remain.

2. Only those trees called out for removal in the Tree Treatment Schedule shall be removed, or otherwise damaged. Should it be determined that any additional trees must be removed, a permit must be applied for and approved from the City of Houston Urban Forestry Division prior to removal. Contractor shall contact Urban Forestry at 832-395-8459.

K. Root Stimulation

1. Deep root stimulate designated trees. Mix fertilizer with wetting agent per label instructions.

2. Stimulate entire root zone area within the dripline of the tree and continue 10 feet beyond the dripline, leaving out areas of anticipated root loss (construction areas).

3. Mixture shall be injected into the top 10 inches of soil under pressure of 150 to 200 psi as soil conditions warrant.

4. Mix in a tank with agitation capability per label instructions. Inject the mixture on a 2.5 ft. square grid at 4 lbs, actual nitrogen per 1,000 sq. ft.

L. Regularly water trees which have received root damage, to eliminate additional stress caused by lack of moisture. Water during periods without adequate rainfall. For example, should 1.0" of rain not be received within a week period, the trees should be thoroughly watered.

March through September, water once every two weeks. October through February, water every three weeks. Water thoroughly to saturate the entire root zone area.

M. Chemically treat tree trunks with evidence of borer activity with the appropriate approved insecticide mixed and applied per the manufacturer's product application recommendations. Trees shall be sprayed within 24 hours after observance of borer activity.

N. Grading and filling around trees.

1. Maintain existing grade within the dripline of trees, unless otherwise indicated.

2. Where existing grade around trees is above new finish grade, under supervision of project urban forester, carefully hand excavate within the dripline to make transition to new finish grade.

3. Where existing grade is below new finish grade, place clean bank sand in a single layer to make the transition to new grade. Do not compact; hand grade to required elevation. Specifically to areas where proposed curb is higher than existing and backfill will be required.

O. Demolition, Forming and Pouring Sidewalks (Sidewalk on Grade)

1. Demolition of existing sidewalks, located in or adjacent to the limits of tree protection fencing, shall be completed without disturbing, cutting, or otherwise damaging tree roots and soil located beneath them.

2. The new sidewalk shall be formed at or above the elevation of the existing sidewalk, without disturbing, cutting or otherwise damaging tree roots. Every effort has been made to address tree root and sidewalk elevation issues with information available in the field and on plan and profile sheets. The elevation of every tree root was not available, if tree roots are found to be in conflict with proposed sidewalk, project engineer and urban forester shall be consulted as to how to install sidewalks with minimal impacts to adjacent trees.

3. Checkerplate shall be installed in areas called out only if tree root elevations prohibit construction of ADA compliant sloped concrete sidewalks. Checkerplate shall be installed per detail.

P. Zero curb cutback

1. Disturbance of tree roots or soil behind the existing and/or proposed curb within root zones of trees designated for zero curb cutback shall be prohibited. If the curb can not be removed without disturbing soil or damaging roots back of curb when using

equipment for demolition, the curb shall be broken using a hand held jackhammer and removed by hand.

2. The exposed roots and soil shall be covered immediately after demolition with 6 mil polyethylene in order to avoid desiccation, and contamination by the lime used for road bed stabilization. The polyethylene shall be placed so that it covers the vertical face of soil back of curb and laid back onto the grade 12 inches back of curb. The polyethylene should remain in place, across the entire area specified for zero curb cutback, from the time the existing curb is demolished until the time when the new curb is formed and backfilled. The polyethylene can be pulled up from the vertical face while the road bed is being graded or mixed, to avoid catching the plastic with machinery, but shall be replaced immediately after equipment has completed. The vertical face shall not be exposed for more than 8 hours in any 24 hour period.

3. There shall be no stabilization back of curb in the zero curb cutback areas, or forming with steel forms. The existing grade and roots back of existing curb shall not be disturbed. This may require forming of the new street with wooden forms with stakes inside forms, which may require leaving the forms in place after the street is poured. Should wooden forms be utilized, the wood shall be at minimum a 2x6. The new curb may require hand finishing, as a slip curb machine may not have adequate clearance without disturbing the roots that are to be protected with the zero curb cutback.

4. Roots extending into the street, or on top of the existing curb, in areas to paved shall be cut and removed by hand prior to disturbance or removal with equipment. Roots shall be pruned flush with the proposed back of curb. Roots one inch in diameter and larger shall be cut in a manner to provide a smooth, clean cut surface. Cuts shall be made with the appropriate pruning shears or pruning saws. Roots shall not be chopped or broken.

5. In areas where proposed curb will be may be lower than existing top of curb and tree roots 2" diameter or larger are present, the soil and roots shall not be graded or laid back. The existing elevation shall be maintained and the curb formed to meet elevation or a short elevation difference roots and top of curb maintained.

Q. Demolition, Forming and Pouring of Drive Way Approaches

1. Demolition of existing driveway approaches located beneath the dripline of any tree shall be completed without disturbing, cutting, or otherwise damaging tree roots and soil located beneath them.

2. The new approach shall be formed at or above the elevation of the existing approach where tree roots 2" diameter or larger are present, without disturbing, cutting or

otherwise damaging tree roots. Maximum drive slopes may be needed at bottom of apron to allow forming of drive over tree roots at top of drive. As with sidewalks, the elevation of every tree roots was not available in design. If tree roots are found to be in conflict with proposed approach, project engineer and urban forester shall be consulted as to how to install drive way with minimal impacts to adjacent trees.

R. Replacement Trees for Tree Removals under Ordinance

1. Location, species, and size of replacement trees are indicated on the drawings. Contractor shall layout individual trees at locations shown on drawings. Contractor shall layout individual trees at locations shown on drawings and be responsible for utility locate requirements. In case of conflicts, notify City Engineer and City Urban Forestry before proceeding with work. Trees shall be laid out and locations approved by City Engineer prior to planting.

2. Trees shall meet and be planted according to City of Houston Standard Specification 02915.

S. Arborist and Urban Forester Qualifications

1. Arborist – Employ qualified arborist acceptable to City's Parks and Recreation Department to complete all tree treatments. Arborist shall be normally engaged in the field and have a minimum of 5 years experience. Qualifications of the selected arborist shall be submitted for review and approval by the project engineer and City of Houston.

2. Urban Forester – An Urban forester shall be hired to monitor and assist with field layout (exact locations of fencing, root pruning, and zero curb cutback) of the tree preservation program during demolition and construction to ensure tree protection procedures and techniques are practiced as specified to address concerns and conditions which occur in the field. At a minimum, the individual responsible for monitoring and field layout of the tree protection shall have a minimum of 5 years of experience as a consultant, and shall not be affiliated with a tree care contractor in the Houston area. Qualifications of the selected urban forester shall be submitted for review and approval by the project engineer and City of Houston Urban Forestry Department.

END OF SECTION

Section 01570

STORM WATER POLLUTION PREVENTION CONTROL

PART 1 G E N E R A L

1.01 SECTION INCLUDES

A. Implementation of Storm Water Pollution Prevention Plans (SWP3) described in Section 01410 – TPDES Requirement.

B. Installation, maintenance and removal, of storm water pollution prevention structures: diversion dikes, interceptor dikes, diversion swales, interceptor swales, down spout extenders, pipe slope drains, paved flumes and level spreaders. Structures are used during construction and prior to final development of the site.

C. Filter Fabric Barriers:

1. Type 1: Temporary filter fabric barrier for erosion and sediment control in non-channelized flow areas.

2. Type 2: Temporary reinforced filter fabric barrier for erosion and sediment control in channelized flow areas.

D. Hay Bale Fence.

E. Drop Inlet Basket

F. Inlet Sediment Traps

G. Brush Berm

H. Sand Bag Barrier

I. Bagged Gravel Barrier

J. Sediment Basin

K. Inlet Protection Barrier

1.02 MEASUREMENT AND PAYMENT

A. UNIT PRICES

1. Payment for filter fabric barrier is on a linear foot basis measured between limits of beginning and ending of stakes.

2. Payment for reinforced filter fabric barrier is on a linear foot basis measured between limits of beginning and ending of stakes.

3. Payment for drop inlet baskets is on a unit price basis for each drop inlet basket.

4. Payment for storm inlet sediment traps is on a unit price basis for each storm inlet sediment trap.

5. Payment for storm water pollution prevention structures is on a lump sum basis for the project. Earthen structures with outlet and piping include diversion dikes, interceptor dikes, diversion swales, interceptor swales, and excavated earth-outlet sediment trap, embankment earth-outlet sediment trap, down spout extenders, pipe slope drains, paved flumes, stone outlet sediment trap, and level spreaders.

6. Payment for hay bale barrier, if included in Document 00410 - Bid Form, is on a linear foot of accepted bale barriers, if not include in cost of storm water pollution prevention structures.

7. Payment for brush berm, if included in Document 00410 - Bid Form, is on a linear foot of accepted brush berm, if not include in cost of storm water pollution prevention structures.

8. Payment for sandbag barrier, if included in Document 00410 - Bid Form, is on a linear foot basis measured between limits of beginning and ending of sandbags, if not include in cost of storm water pollution prevention structures.

9. Payment for bagged gravel barrier, if included in Document 00410 - Bid Form, is on a linear foot basis measured between limits of beginning and ending of bagged gravel barrier, if not include in cost of storm water pollution prevention controls.

10. Payment for inlet protection barriers, if included in Document 00410 - Bid Form, is on a linear foot basis measured along outside face of inlet protection barrier, if not include in cost of storm water pollution prevention structures.

11. Refer to Section 01270 - Measurement and Payment for unit price procedures.

B. Stipulated Price (Lump Sum) Contract. If Contract is Stipulated Price Contract, payment for Work in this Section is included in total Stipulated

1.03 REFERENCE STANDARDS

A. ASTM

1. A 36 – Standard Specification for Carbon Structural Steel.

2. D698 – Standard Test Methods for Laboratory Compaction Characteristics of Soil Using Standard Effort (12,400 ft-lbf/ft3 (600kN-m/m3)).

3. D3786 – Standard Test Method for Hydraulic Bursting Strength for knitted Goods and Nonwoven Fabrics.

4. D 4355 - Standard Test Method for Deterioration of Geotextiles from Exposure to Ultraviolet Light and Water (Xenon-Arc Type Apparatus).

5. D 4491 - Standard Test Methods for Water Permeability of Geotextiles by Permittivity.

6. D 4632 - Standard Test Method for Grab Breaking Load and Elongation of Geotextiles.

7. D 4833 - Standard Test Method for Index Puncture Resistance of Geotextiles, Geomembranes, and Related Products.

8. D 6382 - Standard Practice for Dynamic Mechanical Analysis and Thermogravimetry of Roofing and Waterproofing Membrane Material.

B. Storm Water Management Handbook for Construction Activities prepared by City of Houston, Harris County and Harris County Flood Control District.

1.04 SYSTEM DESCRIPTIONS

A. Filter Fabric Barrier Type 1 and Type 2: Install to allow surface or channel runoff percolation through fabric in sheet-flow manner and to retain and accumulate sediment. Maintain Filter Fabric Barriers to remain in proper position and configuration at all times.

B. Hay Bale Fence: Install to allow surface runoff percolation through hay in sheet-flow manner and to retain and accumulate sediment. Maintain Hay Bale Fence to remain in proper position and configuration at all times.

C. Interceptor Dikes and Swales: Construct to direct surface or channel runoff around the project area or runoff from project area into sediment traps.

D. Drop Inlet Baskets: Install to allow runoff percolation through the basket and to retain and accumulate sediment. Clean accumulation of sediment to prevent clogging and backups.

E. Sediment Traps: Construct to pool surface runoff from construction area to allow sediment to settle onto the bottom of trap.

F. Sand Bags: Are used during construction activities in unstabilized minor swales, ditches, or streambeds when the contributing drainage area is no greater than 2 acres. It is also sediment barrier for stage one Inlet.

G. Bagged Gravel Barrier: Are used during construction activities in unstabilized minor swales, ditches, or streambeds when the contributing drainage area is no greater than 2 acres. It is also sediment barrier for stage two Inlet.

H. Drop Inlet Insert Basket: Is a temporary barrier placed within a storm drain inlet (Lower Portion of Stage I and Upper Portion of Stage II Inlets) consisting of a filter fabric supported by a metal frame work to prevent sediment and other pollutants from entering convey system.

I. Brush Berm: Brush Berm is constructed at the perimeter of a distribute site within the developing area.

1.05 SUBMITTALS

A. Conform to requirements of Section 01330 - Submittal Procedures.

B. Submit manufacturer's literature for product specifications and installation instructions.

C. Submit manufacturer-s catalog sheets and other product data on geotextile or filter fabrics, outlet pipe, perforated riser and connectors.

D. Submit proposed methods, equipment, materials, and sequence of operations for storm-water pollution prevention structures.

E. Submit shop drawings for Drop Inlet Baskets.

PART 2 P R O D U C T S

2.01 CONCRETE

A. Concrete: Class B in accordance with Section 03315 – Concrete for Utility Construction or as shown on the Drawings.

2.02 AGREGATE MATERIALS

A. Use poorly graded cobbles with diameter greater than 3 inches and less than 5 inches.

B. Provide gravel lining in accordance with Section 2320 – Utility Backfill Materials or as shown on the drawings.

C. Provide clean cobbles and gravel consisting of crushed concrete or stone. Use clean, hard crushed concrete or stone free from adherent coatings, salt, alkali, dirt, clay, loam, shale, soft or flaky materials, or organic matter.

D. Sediment Pump Pit Aggregate: Use nominal 2-inch diameter river gravel.

2.03 PIPE

A. Polyethylene culvert pipe or PVC sewer pipe in accordance with Section 02505- High Density Polyethylene (HDPE) Solid and Profile Wall Pipe and Section 02506 Polyvinyl Chloride Pipe or as shown on the Drawings.

B. Inlet Pipes: Galvanized steel pipe in accordance with Section 02642 Corrugated Metal Pipe or as shown on the Drawings.

C. Standpipe for Sediment Pump Pits: Galvanized round culvert pipe or round PVC pipe, minimum of 12-inch and a maximum of 24-inch diameter, perforate at 6 to 12 inch centers around circumference.

2.04 GEOTEXTILE FILTER FABRIC

A. Woven or nonwoven geotextile filter fabric made of either polypropylene, polyethylene, ethylene, or polyamide material, in continuous rolls of longest practical length.

B. Grab Strength: 100 psi in any principal direction (ASTM D-4632), Mullen burst strength >200 psi (ASTM D-3786), and equivalent opening size between 50 and 140.

C. Furnish ultraviolet inhibitors and stabilizers for minimum 6 months of expected usable construction life at temperature range of 0 degrees F to 120 degrees F.

D. Mirafi, Inc., Synthetic Industries, or equivalent

2.05 BARRIER

A. Wire Barrier: Woven galvanized steel wire, 14 gauge by 6-inch square mesh spacing, minimum 24 inch roll or sheet width of longest practical length.

B. Barrier Stakes: Nominal 2 by 2 inch moisture-resistant treated wood or steel posts (min. of 1.25 lbs. per linear foot and Brinell Hardness greater than 140) with safety caps on top; length as required for minimum 8 inch bury and full

height of filter fabric.

2.06 SANDBAGS

A. Provide woven material made of polypropylene, polyethylene, or polyamide material.

1. Minimum unit weight of four ounces per square yard.

2. Minimum grab strength of 100 lbs in any principal direction (ASTM D4632)

3. Mullen burst strength exceeding 300 lbs (ASTM D4833).

4. Ultraviolet stability exceeding 70 percent. After 500 hours of exposure (ASTM 4355).

5. Size: Length:18 to 24 inches. Width: 12 to 18 inches. Thickness: 6 to 8 inches. Weight: Approximately 40 to 50 pounds not to exceed 75 pounds.

2.07 Bagged gravel Barrier

1. Minimum unit weight of four ounces per square yard.

2. Minimum grab strength of 100 lbs in any principal direction (ASTM D4632)

3. Mullen burst strength exceeding 300 lbs (ASTM D4833).

4. Ultraviolet stability exceeding 70 percent. After 500 hours of exposure (ASTM 4355).

5. Size: Length:18 to 24 inches. Width: 12 to 18 inches. Thickness: 6 to 8 inches. Weight: Approximately 40 to 50 pounds not to exceed 75 pounds.

2.08 DROP INLET BASKET

A. Provide steel frame members in accordance with ASTM A36.

B. Construct top frame of basket with two short sides of 2 inch by 2 inch and single long side of 1 inch by 1 inch, 1/8 inch angle iron. Construct basket hangers of 2 inch by 1/4 inch iron bars. Construct bottom frame of 1 inch by 1/4 inch iron bar or 1/4 inch plate with center 3 inches removed. Use minimum 1/4 inch diameter iron rods or equivalent for sides of inlet basket.

Weld minimum of 14 rods in place between top frame/basket hanger and bottom frame. Exact dimensions for top frame and insert basket will be determined based on dimensions of type of inlet being protected.

2.09 HAY BALE

A. Hay: Standard-baled agricultural hay bound by wire, nylon, or polypropylene rope. Do not use jute or cotton binding.

B. Hay Bale Stakes (applicable where bales are on soil): No. 3 (3/8 diameter) reinforcing bars, deformed or smooth at Contractor's option, length as required for minimum 18 inch bury and full height bales.

PART 3 E X E C U T I O N

3.01 PREPARATION, INSTALLATION AND MAINTEINANCE

A. Provide erosion and sediment control structures at locations shown on the Drawings.

B. Do not clear, grub or rough cut until erosion and sediment control systems are in place unless approved by Project Manger to allow installation of erosion and sediment control systems, soil testing and surveying.

C. Maintain existing erosion and sediment control systems located within project site until acceptance of Project or until directed by Project Manger to remove and discard existing system.

D. Regularly inspect and repair or replace damaged components of erosion and sediment control structures. Unless otherwise directed, maintain erosion and sediment control structure until project area stabilization is accepted. . Redress and replace granular fill at outlets as needed to replenish depleted granular fill. Remove erosion and sediment control structures promptly when directed by Project Manger. Dispose of materials in accordance with Section 01576 - Waste Material Disposal.

E. Remove and dispose sediment deposits at the designated spoil site for the Project. If a project spoil site is not designated on Drawings, dispose of sediment off site at approved location in accordance with Section 01576 - Waste Material Disposal.

F. Unless otherwise shown on the Drawings, compact embankments, excavations, and trenches in accordance with Section 02315 Roadway

Excavation or Section 2317 Excavation and Backfill for Utilities.

G. Prohibit equipment and vehicles from maneuvering on areas outside of dedicated right of way and easements for construction. Immediately repair damage caused by construction traffic to erosion and sediment control structures.

H. Protect existing trees and plants in accordance with Section 1562 – Tree and Plant Protection.

3.02 SEDIMENT TRAPS

A. Install sediment traps so that surface runoff shall percolate through system in sheet flow fashion and allow retention and accumulation of sediment.

B. Inspect sediment traps after each rainfall, daily during periods of prolonged rainfall, and at a minimum once each week. Repair or replace damaged sections immediately.

C. Use fill material for embankment in accordance with Section 02320 – Utility Backfill Materials.

D. Excavation length and height shall be as specified on Drawings. Use side slopes of 2:1 or flatter.

E. Stone outlet sediment traps:

1. Maintain minimum of 6 inches between top of core material and top of stone outlet, minimum of 4 inches between bottom of core material and existing ground and minimum of 1 foot between top of stone outlet and top of embankment.

2. Embed cobbles minimum of 4 inches into existing ground for stone outlet. Core shall be minimum of 1 foot in height and in width and wrapped in triple layer of geotextile filter fabric.

F. Sediment Basin with Pipe Outlet Construction Methods: Install outlet pipe and riser as shown on the Drawings.

G. Remove sediment deposits when design basin volume is reduced by one-third or sediment level is one foot below principal spillway crest, whichever is less.

3.03 FILTER FABRIC BARRIER CONSTRUCTION METHODS

A. Fence Type 1: Filter Fabric: Barrier

1. Install stakes 3 feet on center maximum and firmly embed minimum 8 inches in soil. If filter fabric is factory preassembled with support netting, then maximum support spacing is 8 feet. Install wood stakes at a slight angle toward the source of anticipated runoff.

2. Trench in the toe of the fence lines so the downward face of the trenches is flat and perpendicular to direction of flow. V-trench configuration as shown on Drawings may also be used.

3. Lay fabric along edges of trenches in longest practical continuous runs to minimize joints. Make joints only at a support post. Splice with minimum 6-inch overlap and seal securely.

4. Staple filter fabric to stakes at maximum 3 inches on center. Extend fabric minimum 18 inches and maximum 36 inches above natural ground.

5. Backfill and compact trench.

B. Barrier Type 2: Reinforced Filter Fabric Barrier

1. Layout barrier same as for Type 1.

2. Install stakes at 6 feet on center maximum and at each joint in wire fence, firmly embedded 1-foot minimum, and inclined it as for Type 1.

3. Tie wire fence to stakes with wire at 6 inches on center maximum. Overlap joints minimum one bay of mesh.

4. Install trench same as for Type 1.

5. Fasten filter fabric wire fence with tie wires at 3 inches on center maximum.

6. Layout fabric same as for Type 1. Fasten to wire fence with wire ties at 3 inches on center maximum and, if applicable, to stakes above top of wire fence it as for Type 1.

7. Backfill and compact trench.

8. Attach filter fabric to wooden fence stakes spaced a maximum of 6 feet apart or steel fence stakes spaced a maximum of 8 feet apart and embedded a minimum of 12 inches. Install stakes at a slight angle toward source of anticipated runoff.

9. Trench in toe of filter fabric barrier with spade or mechanical trencher so that downward face of trench is flat and perpendicular to direction of flow. A V-trench configuration may also be used. Lay filter fabric along edges of trench. Backfill and compact trench upon completion of Construction.

10. Filter fabric fence shall have a minimum height of 18 inches and a maximum height of 36 inches above natural ground.

11. Cut length of fence to minimize use of joints. When joints are necessary, splice fabric together only at support post with minimum 6 inch overlap and seal securely.

12. When used in swales, ditches or diversions, elevation of barrier at top of filter fabric at flow line location in channel shall be lower than bottom elevation of filter fabric at ends of barrier or top of bank, whichever is less, in order to keep storm water discharge in channel from overtopping bank.

C. Triangular Filter Fabric Barrier Construction Methods

1. Attach filter fabric to wire fencing, 18 inches on each side. Provide a fabric cover and skirt with continuous wrapping of fabric. Skirt should form continuous extension of fabric on upstream side of fence.

2. Secure triangular fabric filter barrier in place using one of the following methods:
   a. Toe-in skirt 6 inches with mechanically compacted material;
   b. Weight down skirt with continuous layer of 3-inch to 5-inch graded rock; or
   c. Trench-in entire structure 4 inches.

3. Anchor triangular fabric filter barrier structure and skirt securely in place using 6-inch wire staples on 2-foot centers on both edges and on skirt, or staked using 18-inch by 3/8-inch diameter re-bar with tee ends.

4. Lap fabric filter material by 6 inches to cover segment joints. Fasten joints with galvanized shoat rings.

3.04 DIKE AND SWALE

A. Unless otherwise indicated, maintain minimum dike height of 18 inches, measured from cleared ground at up slope toe to top of dike. Maintain side slopes of 2:1 or flatter.

B. Dike and Swale Stabilization: When shown on the Drawings, place gravel lining 3 inches thick and compacted into the soil or 6 inches thick if truck crossing is expected. Extend gravel lining across bottom and up both sides of swale minimum height of 8 inches vertically, above bottom. Gravel lining on dike side shall extend up the up slope side of dike a minimum height of 8 inches, measured vertically from interface of existing or graded ground and up slope toe of dike, as shown on Drawings.

C. Divert flow from dikes and swales to sediment basins, stabilized outlets, or sediment trapping devices of types and at locations shown on Drawings. Grade dikes and swales as shown on Drawings, or, if not specified, provide positive drainage with maximum grade of 1 percent to outlet or basin.

D. Clear in accordance with Section 2233 – Clearing and Grubbing Compact embankments in accordance with Section 2315 – Roadway Excavation.

E. Carry out excavation for swale construction so that erosion and water pollution is minimal. Minimum depth shall be 1 foot and bottom width shall be 4 feet, with level swale bottom. Excavation slopes shall be 2:1 or flatter. Clear, grub and strip excavation area of vegetation and root material.

3.05 DOWN SPOUT EXTENDER

A. Down spout extender shall have slope of approximately 1 percent. Use pipe diameter of 4 inches or as shown on the Drawings. Place pipe in accordance with Section 2317 - Bedding and Backfill for Utilities.

3.06 PIPE SLOPE DRAIN

A. Compact soil around and under drain entrance section to top of embankment in lifts appropriately sized for method of compaction utilized.

B. Inlet pipe shall have slope of 1 percent or greater. Use pipe diameter as shown on the Drawings.

C. Top of embankment over inlet pipe and embankments directing water to pipe shall be at least 1 foot higher at all points than top of inlet pipe.

D. Pipe shall be secured with hold-down grommets spaced 10 feet on centers.

E. Place riprap apron with a depth equal to pipe diameter with 2:1 side slopes.

3.07 PAVED FLUME

A. Compact soil around and under the entrance section to top of the embankment in lifts appropriately sized for method of compaction utilized.

B. Construct subgrade to required elevations. Remove and replace soft sections and unsuitable material. Compact subgrade thoroughly and shape to a smooth, uniform surface.

C. Construct permanent paved flumes in accordance with Drawings.

D. Remove sediment from riprap apron when sediment has accumulated to depth of one foot.

3.08 LEVEL SPREADER

A. Construct level spreader on undisturbed soil and not on fill. Ensure that spreader lip is level for uniform spreading of storm runoff.

B. Maintain at required depth, grade, and cross section as specified on Drawings. Remove sediment deposits as well as projections or other irregularities which will impede normal flow.

3.09 INLET PROTECTION BARRIER

A. Place sandbags for Stage I, Bagged gravel for Stage II and filter fabric barriers at locations shown on the SWP3. Maintain to allow minimal inlet in flow restrictions / blockage during storm event.

3.10 DROP INLET BASKET CONSTRUCTION METHODS

A. Fit inlet insert basket into inlet without gaps around insert at locations shown on the SWP3.

B. Support for inlet insert basket shall consist of fabricated metal as shown on Drawings.

C. Push down and form filter fabric to shape of basket. Use sheet of fabric large enough to be supported by basket frame when holding sediment and extend at least 6 inches past frame. Place inlet grates over basket/frame to serve as fabric anchor.

D. Remove sediment deposit after each storm event and whenever accumulation exceeds 1-inch depth during weekly inspections.

3.11 HAY BALE FENCE CONSTRUCTION METHODS

A. Place bales in row with ends tightly abutting adjacent bales. Place bales with bindings parallel to ground surface.

B. Embed bale in soil a minimum of 4 inches.

C. Securely anchor bales in place with Hay Bale Stakes driven through bales a minimum of 18-inches into ground. Angle first stake in each bale toward previously laid bale to force bales together.

D. Fill gaps between bales with straw to prevent water from channeling between bales. Wedge carefully in order not to separate bales.

E. Replace with new hay bale fence every two months or as required by Project Manager.

3.12 BRUSH BERM CONSTRUCTION METHODS

A. Construct brush berm along contour lines by hand placing method. Do not use machine placement of brush berm.

B. Use woody brush and branches having diameter less than 2-inches with 6-inches overlap. Avoid incorporation of annual weeds and soil into brush berm.

C. Use minimum height of 18-inches measured from top of existing ground at upslope toe to top of berm. Top width shall be 24 inches minimum and side slopes shall be 2:1 or flatter.

D. Embed brush berm into soil a minimum of 4-inches and anchor using wire, nylon or polypropylene rope across berm with a minimum tension of 50 pounds. Tie rope securely to 18-inch x 3/8-inch diameter rebar stakes driven into ground on 4-foot centers on both sides of berm.

3.13 STREET AND SIDEWALK CLEANING

A. Keep areas clean of construction debris and mud carried by construction vehicles and equipment. If necessary, install stabilized construction exits at construction, staging, storage, and disposal areas, following Section 01575-Stabilized Construction Exit.

B. In lieu of or in addition to stabilized construction exits, shovel or sweep pavements as required to keep areas clean. Do not waterhose or sweep debris and mud off street into adjacent areas, except, hose sidewalks during off-peak hours, after sweeping.

3.14 WASTE COLLECTION AREAS

A. Prevent water runoff from passing through waste collection areas, and prevent water runoff from waste collection areas migrating outside collection areas.

3.15 EQUIPMENT MAINTENANCE AND REPAIR

A. Confine maintenance and repair of construction machinery and equipment to areas specifically designated for that purpose, so fuels, lubricants, solvents, and other potential pollutants are not washed directly into receiving streams or storm water conveyance systems. Provide these areas with adequate waste disposal receptacles for liquid and solid waste. Clean and inspect maintenance areas daily.

B. Where designated equipment maintenance areas are not feasible, take precautions during each individual repair or maintenance operation to prevent potential pollutants from washing into streams or conveyance systems. Provide temporary waste disposal receptacles.

3.16 VEHICLE/ EQUIPMENT WASHING AREAS

A. Install wash area (stabilized with coarse aggregate) adjacent to stabilized construction access, as required to prevent mud and dirt run-off. Release wash water into drainage swales or inlets protected by erosion and sediment controls. Build wash areas following Section 01575- Stabilized Construction access. Install gravel or rock base beneath wash areas.

B. Wash vehicles only at designated wash areas. Do not wash vehicles such as concrete delivery trucks or dump trucks and other construction equipment at locations where runoff flows directly into waterways or storm water conveyance systems.

C. Locate wash areas to spread out and evaporate or infiltrate wash water directly into ground, or collect runoff in temporary holding or seepage basins.

3.17 WATER RUNOFF AND EROSION CONTROL

A. Control surface water, runoff, subsurface water, and water from excavations and structures to prevent damage to the Work, the site, or adjoining properties. Follow environment requirements.

B. Control fill, grading and ditching to direct water away from excavations, pits, tunnels, and other construction areas, and to direct drainage to proper runoff courses to prevent erosion, sedimentation or damage.

C. Provide, operate, and maintain equipment and facilities of adequate size to control surface water.

D. Retain existing drainage patterns external to the site by constructing temporary earth berms, sedimentation basins, retaining areas, and temporary ground cover as required to control conditions.

E. Plan and execute construction and earth work to control surface drainage from cuts and fills, and from borrow and waste disposal areas, to prevent erosion and sedimentation.

1. Hold area of bare soil exposed at one time to a minimum.

2. Provide temporary controls such as berms, dikes, and drains.

F. Construct fill and waste areas by selective placement to eliminate surface silts or clays which will erode.

G. Inspect earthwork periodically to detect start of erosion. Immediately apply corrective measures as required to control erosion.

H. Dispose of sediments offsite, not in or adjacent to waterways or floodplains, nor allow sediments to flush into streams or drainage ways. Assume responsibility for offsite disposal location.

I. Unless otherwise indicated, compact embankments, excavations, and trenches by mechanically blading, tamping, and rolling soil in maximum of 8-inch layers. Provide compaction density at minimum 90 percent Standard Proctor ASTM D-698-78 density. Make at least one test per 500 cubic yards of embankment.

J. Prohibit equipment and vehicles from maneuver on areas outside of dedicated rights-of-way and easements for construction. Immediately repair damage to erosion and sedimentation control systems caused by construction traffic.

K. Do not damage existing trees intended to remain.

3.18 REMOVAL OF CONTROLS

A. Remove erosion and sediment controls when the site is finally stabilized or as directed by Project Manager.

B. Dispose of sediments and waste products following Section 01505-Temporary Facilities.

END OF SECTION

Section 01575

STABILIZED CONSTRUCTION ACCESS

PART 1 GENERAL

1.01 SECTION INCLUDES

A. Installation and removal of erosion and sediment control for stabilized construction access used during construction and prior to final development of site, as shown in City of Houston Standard Construction details, DWG No. 01571-01.

1.02 MEASUREMENT AND PAYMENT

A. Unit Price Contracts. If Contract is Unit Price Contract, payment for work in this Section will be based on the following:

1. Stabilized construction roads, parking areas, access and wash areas: per square yard of aggregate/recycled concrete without reinforcing placed in 8-inch layers. No separate payment will be made for street cleaning necessary to meet TPDES requirements. Include cost of work for street cleaning under related Specification section.

B. Stipulated Price (Lump Sum) Contracts. If the Contract is a Stipulated Price Contract, include payment for work under this Section in the total Stipulated Price.

1.03 SUBMITTALS

A. Conform to requirements of Section 01330 - Submittal Procedures.

B. Submit manufacturers catalog sheets and other Product Data on geotextile fabric.

C. Submit sieve analysis of aggregates conforming to requirements of this Specification.

1.04 REFERENCES

A. ASTM D 4632 - Standard Test Method for Grab Breaking Load and Elongation of Geotextiles.

B. Storm Water Quality Management Handbook For Construction Activities prepared by the City of Houston, Harris County and Harris County Flood Control District.

PART 2 PRODUCTS

2.01 GEOTEXTILE FABRIC

A. Provide woven or non-woven geotextile fabric made of polypropylene, polyethylene, ethylene, or polyamide material.

B. Geotextile fabric: Minimum grab strength of 200 lbs in any principal direction (ASTM D-4632) and equivalent opening size between 50 and 140.

C. Geotextile and threads: Resistant to chemical attack, mildew, and rot and contain ultraviolet ray inhibitors and stabilizers to provide minimum of six months of expected usable life at temperature range of 0 to 120 degrees F.

D. Representative Manufacturers: Mirafi, Inc. or equal.

2.02 COARSE AGGREGATES

A. Coarse aggregate: Crushed stone, gravel, crushed blast furnace slag, or combination of these materials. Aggregate shall be composed of clean, hard, durable materials free from adherent coatings of, salt, alkali, dirt, clay, loam, shale, soft or flaky materials, or organic and injurious matter.

B. Coarse aggregates to consist of open graded rock 2" to 8" in size.

PART 3 EXECUTION

3.01 PREPARATION AND INSTALLATION

A. Provide stabilized construction roads and access at construction, staging, parking, storage,
and disposal areas to keep street clean of mud carried by construction vehicles and equipment. Construct erosion and sediment controls in accordance with Drawings and Specification requirements.

B. Do not clear grub or rough cut until erosion and sediment control systems are in place, unless approved by Project Manager to allow soil testing and surveying.

C. Maintain existing construction site erosion and sediment control systems until acceptance of the Work or until removal of existing systems is approved by Project Manager.

D. Regularly inspect, repair or replace components of stabilized construction access. Unless otherwise directed, maintain stabilized construction roads and

access until the City accepts the Work. Remove stabilized construction roads and access promptly when directed by Project Manager. Discard removed materials off-site.

E. Remove and dispose of sediment deposits at designated spoil site for Project. If a spoil site is not designated on Drawings, dispose of sediment off-site at a location not in or adjacent to stream or flood plain. Assume responsibility for off-site disposal.

F. Spread compacted and stabilized sediment evenly throughout site. Do not allow sediment to flush into streams or drainage ways. Dispose of contaminated sediment in accordance with existing federal, state, and local rules and regulations.

G. Prohibit equipment and vehicles from maneuvering on areas outside of dedicated rights-of-way and easements for construction. Immediately repair damage to erosion and sediment control systems caused by construction traffic.

H. Conduct construction operations in conformance with erosion control requirements of Specification 01570 – Storm Water Pollution Control.

3.02 CONSTRUCTION MAINTENANCE

A. Provide stabilized access roads, subdivision roads, parking areas, and other on-site vehicle transportation routes where shown on Drawings.

B. Provide stabilized construction access and vehicle washing areas, when approved by Project Manager, of sizes and at locations shown on Drawings or as specified in this Section.

C. Clean tires to remove sediment on vehicles leaving construction areas prior to entering public right-of-ways. Construct wash areas needed to remove sediment. Release wash water into drainage swales or inlets protected by erosion and sediment control measures.

D. Details for stabilized construction access are shown on Drawings. Construct other stabilized areas to same requirements. Maintain minimum roadway widths of 14 feet for one-way traffic and 20 feet for two-way traffic and of sufficient width to allow ingress and egress. Place geotextile fabric as a permeable separator to prevent mixing of coarse aggregate with underlaying soil. Limit exposure of geotextile fabric to elements between laydown and cover to a maximum 14 days to minimize potential damage.

E. Grade roads and parking areas to provide sufficient drainage away from stabilized areas. Use sandbags, gravel, boards, or similar materials to prevent sediment from entering public right-of-ways, waterways or

storm water conveyance systems.

F. Inspect and maintain stabilized areas daily. Provide periodic top dressing with additional coarse aggregates to maintain required depth. Repair and clean out damaged control systems used to trap sediment. Immediately remove spilled, dropped, washed, or tracked sediment from public right-of-ways.

G. Maintain lengths of stabilized areas as shown on Drawings or a minimum of 50 feet. Maintain a minimum thickness of 8 inches. Maintain minimum widths at all points of ingress or egress.

H. Stabilize other areas with the same thickness, and width of coarse aggregate required for stabilized construction access, except where shown otherwise on Drawings.

I. Stabilized areas may be widened or lengthened to accommodate truck washing areas when authorized by Project Manager.

J. Clean street daily before end of workday. When excess sediments have tracked onto streets, Project Manager may direct Contractor to clean street as often as necessary. Remove and legally dispose of sediments.

K. Use other erosion and sediment control measures to prevent sediment runoff during rain periods and non-working hours and when storm discharges are expected.

END OF SECTION

Section 01576

WASTE MATERIAL DISPOSAL

PART 1 G E N E R A L

1.01 SECTION INCLUDES

A. Disposal of waste material and salvageable material.

1.02 SUBMITTALS

A. Conform to requirements of Section 01330 - Submittal Procedures.

B. Submit copy of approved "Development Permit", as defined in Chapter 19 of Flood Plain Ordinance (City Ordinance Number 81-914 and Number 85-1705), prior to disposal of excess material in areas designated as being in "100-year Flood Hazard Area" within the City. Contact the City of Houston Flood Plain Manager, 3300 Main Street, at (713) 525-7605 for flood plain information.

C. Obtain and submit disposal permits for proposed disposal sites, if required by local ordinances.

D. Submit copy of written permission from property owner, with description of property, prior to disposal of excess material adjacent to Project. Submit written and signed release from property owner upon completion of disposal work.

E. Describe waste materials expected to be stored on-site and a description of controls to reduce Pollutants from these materials, including storage practices to minimize exposure of materials to storm water; and spill prevention and response measures in the Project's Storm Water Pollution Prevention Plan (SWPPP). Refer to Section 01410 – TPDES Requirements.

PART 2 P R O D U C T S - Not Used

PART 3 E X E C U T I O N

3.01 SALVAGEABLE MATERIAL

A. Excavated Material: When indicated on Drawings, load, haul, and deposit excavated material at location or locations shown on Drawings outside limits of Project.

B. Base, Surface, and Bedding Material: Load shell, gravel, bituminous, or other base and surfacing material designated for salvage into City trucks.

C. Pipe Culvert: Load culverts designated for salvage into City trucks.

D. Other Salvageable Materials: Conform to requirements of individual Specification Sections.

E. Coordinate loading of salvageable material on City trucks with Project Manager.

3.02 EXCESS MATERIAL

A. Remove and legally dispose of vegetation, rubble, broken concrete, debris, asphaltic concrete pavement, excess soil, and other materials not designated for salvage from job site.

B. Excess soil may be deposited on private property adjacent to Project when written permission is obtained from property owner. See Paragraph 1.02 D above.

C. Verify flood plain status of any proposed disposal site. Do not dispose of excavated materials in area designated as within 100-year Flood Hazard Area unless “Development Permit” has been obtained. Remove excess material placed in "100-year Flood Hazard Area" within the City, without “Development Permit", at no additional cost to the City.

D. Remove waste materials from site daily, in order to maintain site in neat and orderly condition.

END OF SECTION

Section 01578

CONTROL OF GROUND AND SURFACE WATER

PART 1 GENERAL

1.01 SECTION INCLUDES

A. Dewatering, depressurizing, draining, and maintaining trenches, shaft excavations, structural excavations and foundation beds in stable condition, and controlling ground water conditions for tunnel excavations.

B. Protecting work against surface runoff and rising floodwaters.

C. Trapping suspended sediment in the discharge form the surface and ground water control systems.

1.02 MEASUREMENT AND PAYMENT

A. UNIT PRICES

1. When noted, dewatering of trench or excavation during course of project shall be measured per linear foot and paid for at contract unit prices for dewatering, when directed to perform such work by Project Manager. Dewatering must be fully detailed in submittal and submittal must be approved prior to performing dewatering work before payment will be made for dewatering. No payment will be made for work unless directed to perform work by Project Manager.

2. Presence of a pump on project does not constitute dewatering for payment under bid item "Ground Water Control for Open Cut Construction."

3. Dewatering required during course of project to lower water table for other utility installation less than 24 inches in diameter, construction of structures, removal of standing water, surface drainage seepage, or to protect against rising waters or floods shall be considered incidental to Work unless otherwise noted.

4. No separate payment will be made for groundwater control associated with augering, tunnels or casing. Include cost in unit price for augering.

5. Refer to Section 01270 - Measurement and Payment for unit price procedures.

B. Stipulated Price (Lump Sum) Contract. If the Contract is a Stipulated Price Contract, include payment for work under this section in the total Stipulated

Price.

1.03 REFERENCES

A. ASTM D 698 - Standard Test Methods for Laboratory Compaction of Soils Using Standard Effort (12,400 ft-lbf/ft3 (600kN-m/m3)

B. Federal Regulations, 29 CFR Part 1926, Standards-Excavation, Occupational Safety and Health Administration (OSHA)

C. Storm Water Management Handbook for Construction Activities prepared by City of Houston, Harris County and Harris County Flood Control District.

1.04 DEFINITIONS

A. Ground water control system: system used to dewater and depressurize water-bearing soil layers.

1. Dewatering: lowering the water table and intercepting seepage that would otherwise emerge from slopes or bottoms of excavations, or into tunnels and shafts; and disposing of removed water. Intent of dewatering is to increase stability of tunnel excavations and excavated slopes, prevent dislocation of material from slopes or bottoms of excavations, reduce lateral loads on sheeting and bracing, improve excavating and hauling characteristics of excavated material, prevent failure or heaving of bottom of excavations, and to provide suitable conditions for placement of backfill materials and construction of structures and other installations.

2. Depressurization: includes reduction in piezometric pressure within strata not controlled by dewatering alone, necessary to prevent failure or heaving of excavation bottom or instability of tunnel excavations.

B. Excavation drainage: includes keeping excavations free of surface and seepage water.

C. Surface drainage: includes use of temporary drainage ditches and dikes and installation of temporary culverts and sump pumps with discharge lines necessary to protect Work from any source of surface water.

D. Monitoring facilities for ground water control system: includes piezometers, monitoring wells and flow meters for observing and recording flow rates.

1.05 PERFORMANCE REQUIREMENTS

A. Conduct subsurface investigations to identify groundwater conditions and to

provide parameters for design, installation, and operation of groundwater control systems. Submit proposed method and spacing of readings for review prior to obtaining water level readings.

B. Design ground water control system, compatible with requirements of Federal Regulations 29 CFR Part 1926 and Section 02260 - Trench Safety Systems, to produce following results:

1. Effectively reduce hydrostatic pressure affecting:

   a. Excavations

   b. Tunnel excavation, face stability or seepage into tunnels

2. Develop substantially dry and stable subgrade for subsequent construction operations

3. Preclude damage to adjacent properties, buildings, structures, utilities, installed facilities and other work

4. Prevent loss of fines, seepage, boils, quick condition, or softening of foundation strata

5. Maintain stability of sides and bottom of excavations

C. Provide ground water control systems that include single-stage or multiple-stage well point systems, eductor and ejector-type systems, deep wells, or combinations of these equipment types.

D. Provide drainage of seepage water and surface water, as well as water from other sources entering excavation. Excavation drainage may include placement of drainage materials, crushed stone and filter fabric, together with sump pumping.

E. Provide ditches, berms, pumps and other methods necessary to divert and drain surface water from excavation and other work areas.

F. Locate ground water control and drainage systems so as not to interfere with utilities, construction operations, adjacent properties, or adjacent water wells.

G. Assume sole responsibility for ground water control systems and for any loss or damage resulting from partial or complete failure of protective measures and settlement or resultant damage caused by ground water control operations. Modify ground water control systems or operations if they cause or threaten to cause damage to new construction, existing site improvements, adjacent property, adjacent water wells, or potentially contaminated areas. Repair damage caused by ground water control systems or resulting from

failure of system to protect property as required.

H. Install an adequate number of piezometers installed at proper locations and depths, necessary to provide meaningful observations of conditions affecting excavation, adjacent structures and water wells.

I. Install environmental monitoring wells at proper locations and depths necessary to provide adequate observations of hydrostatic conditions and possible contaminant transport from contamination sources into work area or ground water control system.

1.06 SUBMITTALS

A. Conform to requirements of Section 01330 - Submittals Procedures.

B. Submit Ground Water and Surface Water Control Plan for review by Project Manager prior to start of excavation work. Include the following:

1. Results of subsurface investigations and description of extent and characteristics of water bearing layers subject to ground water control

2. Names of equipment Suppliers and installation Subcontractors

3. Description of proposed ground water control systems indicating arrangement, location, depth and capacities of system components, installation details and criteria and operation and maintenance procedures

4. Description of proposed monitoring facilities indicating depths and locations of piezometers and monitoring wells, monitoring installation details and criteria, type of equipment and instrumentation with pertinent data and characteristics

5. Description of proposed filters including types, sizes, capacities and manufacturer's application recommendations

6. Design calculations demonstrating adequacy of proposed systems for intended applications. Define potential area of influence of ground water control operation near contaminated areas.

7. Operating requirements, including piezometric control elevations for dewatering and depressurization

8. Excavation drainage methods including typical drainage layers, sump pump application and other means

9. Surface water control and drainage installations

10. Proposed methods and locations for disposing of removed water

C. Submit following records upon completion of initial installation:

1. Installation and development reports for well points, eductors, and deep wells

2. Installation reports and baseline readings for piezometers and monitoring wells

3. Baseline analytical test data of water from monitoring wells

4. Initial flow rates

D. Submit the following records weekly during control of ground and surface water operations:

1. Records of flow rates and piezometric elevations obtained during monitoring of dewatering and depressurization. Refer to Paragraph 3.02, Requirements for Eductor, Well Points, or Deep Wells.

2. Maintenance records for ground water control installations, piezometers and monitoring wells

1.07 ENVIRONMENTAL REQUIREMENTS

A. Comply with requirements of agencies having jurisdiction.

B. Comply with Texas Commission on Environmental Quality regulations and Texas Water Well Drillers Association for development, drilling, and abandonment of wells used in dewatering system.

C. Obtain necessary permits from agencies with jurisdiction over use of groundwater and matters affecting well installation, water discharge, and use of existing storm drains and natural water sources. Since review and permitting process may be lengthy, take early action to obtain required approvals.

D. Monitor ground water discharge for contamination while performing pumping in vicinity of potentially contaminated sites.

PART 2 PRODUCTS

2.01 EQUIPMENT AND MATERIALS

A. Select equipment and materials necessary to achieve desired results for dewatering. Selected equipment and materials are subject to review by Project Manager through submittals required in Paragraph 1.06, Submittals.

B. Use experienced contractors, regularly engaged in ground water control system design, installation, and operation, to furnish and install and operate educators, well points, or deep wells, when needed

C. Maintain equipment in good repair and operating condition.

D. Keep sufficient standby equipment and materials available to ensure continuous operation, where required.

E. Portable Sediment Tank System: Standard 55-gallon steel or plastic drums, free of hazardous material contamination.

1. Shop or field fabricate tanks in series with main inlet pipe, inter-tank pipes and discharge pipes, using quantities sufficient to collect sediments from discharge water.

PART 3 EXECUTION

3.01 GROUND WATER CONTROL

A. Perform necessary subsurface investigation to identify water bearing layers, piezometric pressures and soil parameters for design and installation of ground water control systems. Perform pump tests, if necessary to determine draw down characteristics. Present results in the Ground Water and Surface Water Control Plan. submittal

B. Provide labor, material, equipment, techniques and methods to lower, control and handle ground water in manner compatible with construction methods and site conditions. Monitor effectiveness of installed system and its effect on adjacent property.

C. Install, operate, and maintain ground water control systems in accordance with the Ground Water and Surface Water Control Plan. Notify Project Manager in writing of changes made to accommodate field conditions and changes to Work. Provide revised drawings and calculations with notification.

D. Provide continuous system operation, including nights, weekends, and holidays. Arrange appropriate backup if electrical power is primary energy source for dewatering system.

E. Monitor operations to verify systems lower ground water piezometric levels at rate required to maintain dry excavation resulting in stable subgrade for

subsequent construction operations.

F. Depressurize zones where hydrostatic pressures in confined water bearing layers exist below excavations to eliminate risk of uplift or other instability of excavation or installed works. Define allowable piezometric elevations in the Ground Water and Surface Water Control Plan.

G. Removal of ground water control installations.

1. Remove pumping system components and piping when ground water control is no longer required.

2. Remove piezometers, including piezometers installed during design phase investigations and left for Contractor's use, upon completion of testing, as required in accordance with Part 3 of applicable specification.

3. Remove monitoring wells when directed by Project Manager.

4. Grout abandoned well and piezometer holes. Fill piping that is not removed with cement-bentonite grout or cement-sand grout.

H. During backfilling, maintain water level a minimum of 5 feet below prevailing level of backfill. Do not allow the water level to cause uplift pressures in excess of 80 percent of downward pressure produced by weight of structure or backfill in place. Do not allow water levels to rise into cement-stabilized sand until at least 48 hour after placement.

I. Provide uniform pipe diameter for each pipe drain run constructed for dewatering. Remove pipe drains when no longer required. If pipe removal is impractical, grout connections at 50-foot intervals and fill pipe with cement-bentonite grout or cement-sand grout after removal from service.

J. The extent of ground water control for structures with permanent perforated underground drainage systems may be reduced, for units designed to withstand hydrostatic uplift pressure. Provide a means to drain affected portions of underground systems, including standby equipment. Maintain drainage systems during construction operations.

K. Remove systems upon completion of construction or when dewatering and control of surface or ground water is no longer required.

L. Compact backfill to not less than 95 percent of maximum dry density in accordance with ASTM D 698.

M. Foundation Slab: Maintain saturation line at least 3 feet below lowest elevations where concrete is to be placed. Drain foundations in areas where

concrete is to be placed before placing reinforcing steel. Keep free from water for 3 days after concrete is placed.

3.02 REQUIREMENTS FOR EDUCTOR, WELL POINTS, OR DEEP WELLS

A. For aboveground piping in ground water control system, include a 12-inch minimum length of clear, transparent piping between each eductor well or well point and discharge header to allow visual monitoring of discharge from each installation.

B. Install sufficient piezometers or monitoring wells to show that trench or shaft excavations in water bearing materials are pre-drained prior to excavation. Provide separate piezometers for monitoring of dewatering and for monitoring of depressurization. Install piezometers and monitoring wells for tunneling as appropriate for selected method of work.

C. Install piezometers or monitoring wells at least one week in advance of the start of associated excavation.

D. Dewatering may be omitted for portions of under drains or other excavations, where auger borings and piezometers or monitoring wells show that soil is pre-drained by existing systems and that ground water control plan criteria are satisfied.

E. Replace installations that produce noticeable amounts of sediments after development.

F. Provide additional ground water control installations, or change method of control if, ground water control plan does not provide satisfactory results based on performance criteria defined by plan and by specifications. Submit revised plan according to Paragraph 1.06B.

3.03 SEDIMENT TRAPS

A. Install sediment tank as shown on approved plan.

B. Inspect daily and clean out tank when one-third of sediment tank is filled with sediment.

3.04 SEDIMENT SUMP PIT

A. Install sediment sump pits as shown on approved plan.

B. Construct standpipe by perforating 12 inch to 24-inch diameter corrugated metal or PVC pipe.

C. Extend standpipe 12 inches to 18 inches above lip of pit.

D. Convey discharge of water pumped from standpipe to sediment trapping device.

E. Fill sites of sump pits, compact to density of surrounding soil and stabilize surface when construction is complete.

3.05 EXCAVATION DRAINAGE

A. Use excavation drainage methods if well-drained conditions can be achieved. Excavation drainage may consist of layers of crushed stone and filter fabric, and sump pumping, in combination with sufficient ground water control wells to maintain stable excavation and backfill conditions.

3.06 MAINTENANCE AND OBSERVATION

A. Conduct daily maintenance and observation of piezometers or monitoring wells while ground water control installations or excavation drainage is operating at the site, or water is seeping into tunnels, and maintain systems in good operating condition.

B. Replace damaged and destroyed piezometers or monitoring wells with new piezometers or wells as necessary to meet observation schedules.

C. Cut off piezometers or monitoring wells in excavation areas where piping is exposed, only as necessary to perform observation as excavation proceeds. Continue to maintain and make specified observations

D. Remove and grout piezometers inside or outside of excavation area when ground water control operations are complete. Remove and grout monitoring wells when directed by Project Manager.

3.07 MONITORING AND RECORDING

A. Monitor and record average flow rate of operation for each deep well, or for each wellpoint or eductor header used in dewatering system. Also, monitor and record water level and ground water recovery. Record observations daily until steady conditions are achieved and twice weekly thereafter.

B. Observe and record elevation of water level daily as long as ground water control system is in operation, and weekly thereafter until Work is completed or piezometers or wells are removed, except when Project Manager determines more frequent monitoring and recording are required. Comply with Project Manager's direction for increased monitoring and recording and

take measures necessary to ensure effective dewatering for intended purpose.

3.08 SURFACE WATER CONTROL

A. Intercept surface water and divert it away from excavations through use of dikes, ditches, curb walls, pipes, sumps or other approved means. Requirement includes temporary works required to protect adjoining properties from surface drainage caused by construction operations.

B. Divert surface water and seepage water into sumps and pump it into drainage channels or storm drains, when approved by agencies having jurisdiction. Provide settling basins when required by agencies.

END OF SECTION

Section 01580

PROJECT IDENTIFICATION SIGNS

PART 1 G E N E R A L

1.01 SECTION INCLUDES

A. Project identification sign description.

B. Project sign installation.

C. Maintenance and removal of Project sign.

1.02 SYSTEM DESCRIPTION

A. Sign Construction: Construct signs of new materials in accordance with Standard Detail provided at the Pre-construction Conference.

B. Appearance: Maintain signs to present a clean and neat look throughout contract duration.

C. Sign Manufacturer: Experienced professional sign company.

D. Sign Placement: At locations shown in Drawings unless otherwise specified by Project Manager at pre-construction meeting.

1. Provide one sign at each end of a linear Project involving paving, overlay, sewer line, storm drainage, or water main construction located in rights-of-ways.

2. Provide one sign for site or building construction Contracts

3. Provide one sign at each site for Contracts with multiple sites.

4. Sign Relocation: As work progresses, relocate signs if directed by Project Manager in writing. Include cost for one relocation of post-mounted signs in Contract Price. Subsequent relocations, if directed by Project Manager in writing, will be subject to Change Order.

E. Skid-mounted signs: Use for projects with noncontiguous locations where work progresses from one location to another. Design skid structure to withstand a 60 mile-per-hour wind load to the face or back of sign using stakes, straps, or ballast. Contractor shall be responsible for security of signs at each site.

1.03 SUBMITTALS

A. Submit Shop Drawings under provisions of Section 01330 - Submittal procedures.

B. Show content, layout, lettering style, lettering size, and colors. Make sign and lettering to scale, clearly indicating condensed lettering, if used.

PART 2 P R O D U C T S

2.01 SIGN MATERIALS

A. Structure and Framing: Use new sign materials.

1. Sign Posts: 4-inch by 4-inch pressure treated wood posts, 9 feet long for skid mounting and 12 feet long minimum for in-ground mounting.

2. Skid Bracing: 2-inch by 4-inch wood framing material.

3. Skid Members: 2-inch by 6-inch wood framing material.

4. Fasteners:
   a. Galvanized steel.
   b. Attach sign to posts with 1/2-inch by 5-1/2 inch button head carriage bolts and secure with nuts and flat head washers.
   c. Cover button heads with white reflective film or paint to match sign background.
   d. Use metal brackets and braces and 3/4-inch wood screws to attach sign header.

B. Sign and Sign Header: 3/4-inch thick marine plywood. Use 4-foot by 8 -foot sheet for the sign and a single piece for the header to minimize joints. Do not piece wood sheets to fabricate sign face.

C. Paint and Primers: White industrial grade, fast-drying, oil-based paint with gloss finish for structural and framing members, sign, and sign header material surfaces. Paint all sign surfaces prior to adding adhesive applications.

D. Colors:

1. Sign Background: Reflective white 3M Scotchlite Engineer Grade, Pressure Sensitive Sheeting (White), or approved equal.

2. Border: For red border around area, which designates project name and project amount, use reflective red 3M Scotchlite Engineer Grade, Pressure Sensitive Sheeting (Red), or approved equal.

3. Sign Film: 3M Scotchcal Pressure Sensitive Films, or approved equal for legends, symbols, lettering, and artwork. Match colors to 3M Scotchcal Pressure Sensitive Films.

a.	Lettering Below Seal:	Black
b.	Lettering Above Project Name:	Vivid Blue
c.	Lettering on Blue Background:	White
d.	Background Behind Project Name:	Vivid Blue

E. City Seal: Project Manager will provide City seals to Contractor, as needed.

2.02 SIGN LAYOUT

A. Lettering:

1. Style, Size, and Spacing: Helvetica Regular lettering.

2. Condensed Style: Text may be condensed if needed to maintain sign composition.

B. Composition:

1. Lines with Standard Text
   a. Top line shall read "BUILDING TOGETHER FOR THE FUTURE".
   b. Use lower left below City Seal to list names and titles for Mayor, Controller and Council Members. Place as shown on Drawings with indicated size and spacing.
   c. Center telephone number of the Customer Response Center, "311", near the bottom of the area with the blue background.

2. Lines with Variable Text. Use blue background space for Project name and dollar amount.
   a. Project Manager will provide Project name and dollar amount of Project for preparation of sign. Center name on one or two lines, and dollar amount immediately below Project name, in area with blue background. Use condensed lettering if necessary.

2.03 LAYOUT AND COMPOSITION FOR HEADER

A. City of Houston Seal:
1. A space of approximately 24 inches in diameter is provided for the City seal, the top 6 inches of which extends above the sign on the sign header.

2. Construct sign header of same material as sign face. Cut material to match curve of the City seal.

3. Project Manager will provide the seal to be affixed to the sign by sign maker.

PART 3 E X E C U T I O N

3.01 INSTALLATION

A. Install Project identification signs within seven days after Date of Commencement of the Work.

B. Erect signs at locations shown in Drawings unless otherwise designated by Project Manager at pre-construction meeting. Position sign so it is fully visible and readable to general public.

C. Erect sign level and plumb.

D. If mounted on posts, sink posts 3 to 4 feet below grade and stabilize posts to minimize lateral motion. Leave a minimum of 8 feet of post above existing grade for mounting of sign.

E. Erect sign so that top edge of sign is at a nominal 8 feet above existing grade.

3.02 MAINTENANCE AND REMOVAL

A. Keep signs and supports clean. Repair deterioration and damage.

B. Remove signs, framing, supports, and foundations to a depth of at least 2 feet upon completion of Project. Restore area to a condition equal to or better than before construction.

PROJECT No.: (FILE NO:)	CONTRACT No.:	REVIEWED BY:

*INSTRUCTIONS TO SIGN MAKER (LIST COMPANY NAME):		
QTY.	ACTION ITEMS:	
	Make new sign(s)	
	Follow City standards attached	
	Provide submittal (drawing) to the City for project sign showing content, layout, lettering style, lettering size, and colors	
VARIABLE TEXT		
Line 1	Project Name:	
Line 2	Project Amount (rounded to nearest $1000):	
ATTACHMENTS INCLUDED		
QTY.	SEALS / LOGOS	
	City of Houston - 24" diameter	
	STANDARDS	
	Standard Specification Section 01580 - Project Identification Signs	
	Standard Detail 01580-03 Construction Sign	

(Instructions on reverse.)

INSTRUCTIONS

Contractor produces this form. Contractor shall insert the information and provide the form to the sign maker with Contractor's purchase order.

List PROJECT No., (FILE No.), CONTRACT No., and name of City's Project Manager REVIEWED BY.

INSTRUCTIONS TO SIGN MAKER:

- Give COMPANY NAME of sign maker.
- Indicate QUANTITY of new signs to be made.
- Direction for sign maker to follow City Standards in making signs.
- Require submittals from sign maker, who provides Shop Drawing of Project sign showing content, layout, lettering style, lettering size, and colors.

VARIABLE TEXT:

- Give PROJECT NAME. Write it out in all caps and suggest line break. Lines are required.
- Give Project amount to be listed on sign. Round off to nearest $1000.

ATTACHMENTS INCLUDED:

- **Seals**

  City provides the quantity of City seals required one for each Project sign.

- **Standards**

  Contractor provides set of Standards to sign maker, including (Specification Section 01580 - Project Identification Signs, and Standard Detail No. 01580-03 - Construction Sign.

Section 01610

BASIC PRODUCT REQUIREMENTS

PART 1 GENERAL

1.01 SECTION INCLUDES

A. Requirements for transportation, delivery, handling, and storage of Products.

1.02 PRODUCTS

A. Products: Defined in Document 00700 – General Conditions. Does not include machinery and equipment used for preparation, fabrication, conveying and erection of the Work. Products may also include existing materials or components designated for reuse.

B. For material and equipment specifically indicated or specified to be reused in the work:

1. Use special care in removal, handling, storage and reinstallation, to assure proper function in completed work.

2. Arrange for transportation, storage and handling of products which require off-site storage, restoration or renovation. Include cost in unit price for related items.

C. When contract documents require that installation of work comply with manufacturer's printed Instructions, obtain and distribute copies of such instructions to parties involved in installation, including two copies to Project Manager. Maintain one set of complete instructions at job site during installation until completion.

D. Provide Products from the fewest number of manufacturers as practical, in order to simplify spare parts inventory and to allow for maximum interchangeability of components. For multiple components of the same size, type or application, use the same make and model of component throughout the Work.

1.03 TRANSPORTATION

A. Make arrangements for transportation, delivery, and handling of Products required for timely completion of the Work.

B. Transport and handle Products in accordance with manufacturer's instructions.

C. Consign and address shipping documents to proper party giving name of the Project and its complete street address. Shipments shall be delivered to

Contractor.

1.04 DELIVERY

A. Arrange deliveries of Products to accommodate short-term site completion schedules and in ample time to facilitate inspection prior to Installation. Avoid deliveries that cause lengthy storage or overburden of limit storage space.

B. Coordinate deliveries to avoid conflict with the Work and conditions at the site and to accommodate the following:

1. Work of other contractors or the City.

2. Limitations of storage space.

3. Availability of equipment and personnel for handling Products.

4. The City's use of premises.

C. Have Products delivered to the site in manufacturer's original, unopened, labeled containers.

D. Immediately upon delivery, inspect shipment to assure:

1. Product complies with requirements of the Contract.

2. Quantities are correct.

3. Containers and packages are intact; labels are legible.

4. Products are properly protected and undamaged.

1.05 PRODUCT HANDLING

A. Coordinate off-loading of Products delivered to the site. If necessary during construction, move and relocate stored Products at no additional cost to the City.

B. Provide equipment and personnel necessary to handle Products, including those provided by the City, by methods to prevent damage to Products or packaging.

C. Provide additional protection during handling as necessary to prevent breaking, scraping, marring, or otherwise damaging Products or surrounding areas.

D. Handle Products by methods to prevent over-bending or overstressing.

E. Lift heavy components only at designated lifting points.

F. Handle Products in accordance with manufacturer's recommendations.

G. Do not drop, roll, or skid Products off delivery vehicles. Hand-carry or use Suitable materials handling equipment.

1.06 STORAGAE OF PRODUCTS

A. Store and protect Products in accordance with manufacturer's recommendations and requirements of these Specifications.

B. Make necessary provisions for safe storage of Products. Place Products so as to prevent damage to any part of the Work or existing facilities and to maintain free access at all times to all parts of the Work and to utility service company installations in the vicinity of the Work. Keep Products neatly and compactly stored in locations that will cause minimum inconvenience to other contractors, public travel, adjoining owners, tenants, and occupants. Arrange storage in a manner so as to provide easy access for inspection.

C. Restrict storage to areas available on the site for storage of Products as shown on Drawings or approved by Project Manager.

D. Provide off-site storage and protection when on-site storage is not adequate. Provide addresses of, and access to, off-site storage locations for inspection by Project Manager.

E. Do not use lawns, grass plots, or other private property for storage purposes without written permission of owner or other person in possession or control of premises.

F. Protect stored Products against loss or damage.

G. Store in manufacturers' unopened containers.

H. Neatly, safely, and compactly stack Products delivered and stored along the line of the Work to avoid inconvenience and damage to property owners and general public, and maintain at least 3 feet clearance around fire hydrants. Keep public, private driveways and street crossings open.

I. Repair or replace damaged lawns, sidewalks, streets or other improvements to satisfaction of Project Manager. Total length that Products may be distributed along route of construction at one time is 1000 linear feet, unless otherwise approved in writing by Project Manager.

PART 2 P R O D U C T S - Not Used

PART 3 E X E C U T I O N - Not Used

END OF SECTION

Section 01630

PRODUCT SUBSTITUTION PROCEDURES

PART 1 G E N E R A L

1.01 SECTION INCLUDES

A. Options for making Product or process selections.

B. Procedures for proposing equivalent Products or processes, including pre-approved, pre-qualified, and approved Products or processes.

1.02 DEFINITIONS

A. Product: As defined in Document 00700 – General Conditions. Product does not include machinery and equipment used for production, fabrication, conveying, and erection of the Work. Products may also include existing materials or components designated for reuse.

B. Process: Any proprietary system or method for installing system components resulting in an integral, functioning part of the Work. For this Section, the word Products includes Processes.

1.03 SELECTION OPTIONS

A. Pre-approved Products: Construction products of certain manufacturers or Suppliers designated in Specifications as "pre-approved." The City maintains a list of pre-approved products. Pre-approved Products for this Project are designated as pre-approved in Specifications. Products of other manufacturers or suppliers are not acceptable for this Project and will not be considered under the submittal process for approving alternate products.

B. Pre-qualified Products: Construction products of certain manufacturers or Suppliers designated in Specifications as "pre-qualified." Pre-qualified Products for this Project are designated as pre-qualified in Specifications. Products of other manufacturers or suppliers are not acceptable for this Project and will not be considered under the submittal process for approving alternate products.

C. Approved Products: Construction products of certain manufacturers or Suppliers designated in Specifications followed by words "or approved equal." Approval of alternate products not listed in Specifications may be obtained through provisions for product options and substitutions in Document 00700 - General Conditions, and by following submittal procedures specified in

Section 01330- Submittal Procedures. The procedure for approval of alternate products is not applicable to pre-approved or pre-qualified products.

D. Product Compatibility: To the maximum extent possible, provide Products that are of the same type or function from a single manufacturer, make, or source. Where more than one choice is available, select Product that is compatible with other Products already selected, specified, or in use by the City.

1.04 CONTRACTOR'S RESPONSIBILITY

A. Responsibility related to Product options and substitutions is defined in Document 00700 - General Conditions.

B. Furnish information Project Manager deems necessary to judge equivalency of alternate Product.

C. Pay for laboratory testing, as well as any other review or examination costs, needed to establish equivalency between products in order to obtain information upon which Project Manager can base a decision.

D. If Project Manager determines alternate product is not equal to that named in Specifications, Furnish one of the specified Products.

1.05 CITY REVIEW

A. Use alternate Products only when approved in writing by Project Manager. Project Manager's determination regarding acceptance of proposed alternate Product is final.

B. Alternate Products shall be accepted if Products are judged by Project Manager to be equivalent to specified Product or to offer substantial benefit to the City.

C. The City retains the right to accept any Product deemed advantageous to the City, and similarly, to reject any product deemed not beneficial to City.

1.06 SUBSTITUTION PROCEDURE

A. Collect and assemble technical information applicable to the proposed Product to aid in determining equivalency as related to the approved Product specified.

B. Submit a written request for a construction Product to be considered as an alternate Product.

C. Submit Product information after the effective date of the Contract and within the time period allowed for substitution submittals given in Document 00700 - General Conditions. After the submittal period has expired, requests for alternate Products shall be considered only when specified Product becomes unavailable because of conditions beyond Contractor's control.

D. Submit five copies of each request for alternate Product approval. Include the following information:

1. Complete data substantiating compliance of proposed substitution with the Contract.

2. For Products:
   a. Product identification, including manufacturer's name and address.
   b. Manufacturer's literature with Product description, performance and test data, and reference standards.
   c. Samples, as applicable.
   d. Name and address of similar projects on which Product was used and date of installation. Include names of Owner, design consultant, and installing contractor.

3. For construction methods:
   a. Detailed description of proposed method.
   b. Drawings illustrating methods.

4. Itemized comparison of proposed substitution with Product or method specified.

5. Data relating to changes in Construction Schedule.

6. Relation to separate contracts, if any.

7. Accurate cost data on proposed substitution in comparison with Product or method specified.

8. Other information requested by Project Manager.

E. Approved alternate Products will be subject to the same review process as the specified Product would have been for Shop Drawings, Product Data, and Samples.

PART 2 P R O D U C T S - Not Used

PART 3 E X E C U T I O N - Not Used

END OF SECTION

Section 01650

EQUIPMENT NOMENCLATURE, DATA IDENTIFICATION AND DATA INPUT

PART 1: GENERAL

1.01 DESCRIPTION

A. A system to uniquely name facilities, systems, equipment and valves to be constructed, installed, and used on City of Houston water facilities projects has been developed and shall be used on all correspondence, submittals, and nameplates as described below.

B. Nomenclature labels shall be as indicated or specified in Paragraph 1.06 below, and as shown on the Drawings.

C. Use the nomenclature labels indicated or specified in all transactions, including correspondences and submittals. If a nomenclature label is not specified or indicated, notify the CM. The CM will assign additional nomenclature labels, where appropriate. Contractor will provide non-specified labels at no additional cost to the City.

D. Labels for painted piping and painted equipment provided under Section 09901 are not part of this Section.

E. Nomenclature and tagging for items provided under Division 13 are part of this section and shall be in accordance with the requirements specified in this Section.

F. Nomenclature and tagging for valves provided under Division 15 are part of this section and shall be in accordance with the requirements of this Section.

G. Nomenclature and tagging for electrical items provided under Division 16 are part of this section and shall be in accordance with the requirements of this Section.

H. In addition to the numbering system specified, the City maintains a Computerized Maintenance Management System (CMMS) that utilizes an Asset Identification and Tagging System nomenclature. The Asset Identification and Tagging System nomenclature is to be used ONLY on Technical Data Forms and should NOT appear on any tags specified under Paragraph 1.06.

I. Fill out and submit completed Technical Data Forms.

J. Asset data identification shall be reported for all equipment purchased as individual items to be assembled or integrated by the contractor, and that lists for more than $500. If an item is purchased as part of an assembly and lists for more than $500, then only the assembly is required to be reported.

1.02 MEASUREMENT AND PAYMENT

A. No separate payment will be made for work provided under this section. Include the cost for this work in the base bid items for all equipment purchased separately with a list price of at least $500.

1.03 RELATED WORK

A. Submittals is included in Section 01330.

B. Contractor Quality Control is included in Section 01450.

C. Acceptance Testing is included in Section 01666.

D. Closeout Procedures are included in Section 01770.

E. Operation and Maintenance Data is included in Section 01782.

1.04 SUBMITTALS

A. Submit, in accordance with Section 01330, the following:

1. Technical Data Forms for equipment and systems requiring such forms, as specified.

1.05 QUALITY ASSURANCE

A. Provide in accordance with Section 01450.

B. Documents (letters, Requests for Information, submittals, O&M manuals, vendor training manuals, shop drawings) which use nomenclature other than as indicated or specified will be rejected by the CM, and corrected and resubmitted by the Contractor at no additional cost to the City.

C. Technical Data Forms not completed in accordance with the specification will be rejected by the CM and corrected and resubmitted by the Contractor at no additional cost to the City.

D. Provide equipment and valve tagging prior to field and hands-on training.

1.06 NOMENCLATURE

A. All process equipment, pumps, gates and valves shall be identified and numbered in accordance with the numbering system as established by the City.

B. Process equipment, pumps, gates, valves and access hatches shall be identified and numbered as indicated in the schedules provided in the Drawings and individual specification sections.

PART 2: PRODUCTS

2.01 TAGS

A. For each item assigned a nomenclature label as specified or indicated, provide a tag with the corresponding nomenclature label.

B. For equipment, provide corrosion resistant, 0.125-in thick plastic tags with equipment nomenclature, in white 1/2-in lettering, engraved in black enamel background, with a minimum of 1/8-in border around the engraved print, and with extra length to provide for fastening device.

C. Provide materials specified below for attaching tags to equipment:

1. Provide 1/8-in by 3/8-in, Type 316 stainless steel machine screws.

2. Provide one-piece self locking nylon tag fasteners for tags that cannot be attached with screws.

   a. Provide nylon fasteners to attach tags only on non-moving parts of stationary equipment.

   b. Fasteners longer than 8-in are not acceptable.

   c. Provide no more than one fastener per tag.

3. Provide 5-mil solvent-activated permanent adhesive.

PART 3: EXECUTION

3.01 GENERAL

A. It is essential to the construction, operation, and maintenance of the Project that the nomenclature and tagging system is correctly implemented. Therefore, all correspondence, requests for information, submittals, operations and maintenance data, tags, spare parts and all other items shall incorporate the correct nomenclature label. Replace or repair items not using the correct nomenclature label, at no additional cost to the City.

3.02 INSTALLATION OF TAGGING

A. Provide all material, equipment, and labor to install identification systems as specified and indicated.

B. Prepare and clean surfaces on which signs and tags will be mounted prior to installation.

C. Tags

1. Attach tags to be accessible and readable without disassembly, removal, or disruption of operation of any equipment.

2. Do not install tags in path of operation of moving or moveable equipment.

3. Tighten nylon tag fasteners such that tags do not hang more than 1-in from equipment in accordance with manufacturer's printed instructions.

4. Drilling for Machine Screws

   a. For fluid handling equipment including pipes, valves and pumps, and electric motors do not drill directly into wall containing the fluid or machinery; drill into flanges or support elements for attaching tags.

D. Install tags as specified with the specified or indicated nomenclature label incorporated as the text for these tags.

3.03 ASSET IDENTIFICATION SYSTEM

A. The Contractor shall use the Asset Identification System to fill out the Technical Data Forms. This nomenclature is ONLY to be used on the Technical Data Forms.

B. The Contractor shall obtain the most recent version of the Technical Data Form from the Construction Manager. An example Technical Data Form is included in Attachment A. The nomenclature shall be designated as follows:

1. The Contractor shall assign each piece of equipment, as specified in this Section, a unique number in accordance with the Asset Identification and Tagging Numbering System. The nomenclature is an alpha-numeric code required for each asset, according to the following structure.

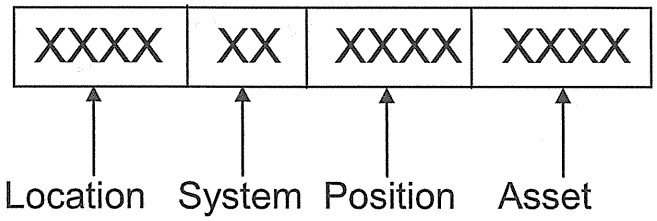

2. Code values must be designated on the Technical Data Form for each new mechanical or electrical piece of equipment. The Technical Data Form is to be submitted for all new mechanical and electrical equipment (including instrumentation) added under this Contract.

3. The first code is the "Location" code. The "Location" Code for this project will be provided by the City.

4. The second code value is the "System" code. The two digit numeric "System" code identifies assets by its functional position. The currently established system codes are shown as follows:

System Code	System Description
01	Raw Water (RW)
02	Bulk Storage and Chemical Feed (CHEM)
03	Flocculation (FLOC)
04	Sedimentation (SEDIM)
05	Filtration (FLT)
06	Distribution (DIST)
07	Process Waste Treatment (PWT)
08	Facilities (FAC)
09	Grounds (GRNDS)

5. The third code value is the "Position" code. The "Position" code is an alpha-numeric code which combines processes and functions. The currently established position codes are shown in Attachment B.

6. The fourth code value is "Asset" code. The four digit "Asset" code is a numeric code that describes the asset position or station number. The plant asset identification numbers will be assigned by the City of Houston.

3.04 TECHNICAL DATA FORMS

A. Obtain most recent Technical Data Form from CM.

B. Completely fill out Technical Data Form using the nomenclature specified in Paragraph 3.03.

C. General Form Requirements

1. Provide completed forms electronically using template provided by CM. Template will be a Windows-based program.

2. Submit hard copy of all electronic files.

3. Completely check all forms so that the information provided exactly matches the data for the equipment supplied.

D. Use electronic file for the Technical Data Form provided by CM. Form shall be submitted electronically in Microsoft Excel format and hardcopy.

E. Complete the Technical Data Form as specified.

3.05 CLOSEOUT PROCEDURES

A. Provide in accordance with Section 01770.

B. Compare tags and signs with equipment and areas referenced. Replace tags and signs that do not reference equipment or area to which attached, located, or giving direction to, at no additional cost to the City.

Attachment A – Sample Technical Data Forms

Attachment B - Position Code to be used on Technical Data Forms

END OF SECTION

ATTACHMENT A
SAMPLE TECHNICAL DATA SHEET

GENERAL INFORMATION	
FACILITY NAME	
FACILITY NUMBER	
EQUIPMENT ID NUMBER	
EQUIPMENT DESIGNATION	
LOCATION	
PART #	
EQUIPMENT MANUFACTURER	
REMARKS:	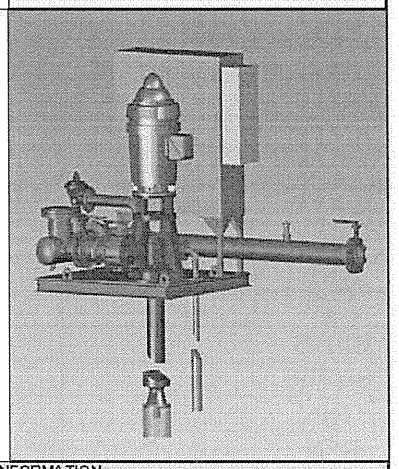

DRIVE INFORMATION			
EQUIPMENT MANUFACTURER			
MODEL #			
SERIAL #			
MAX FLOW		OUTPUT RPM:	
DRIVER:		MAX PRESS:	
INPUT HP:		COUPLING SIZE:	
GEAR RATIO:		SERVICE FACTOR	
MOTOR INFORMATION			
MANAFACTURED BY			
MODEL #			
SERIAL #			
NEMA FRAME		NEMA DESIGN	
VOLTS:		RPM:	
AMPS:		PHASES:	
HP:		SF:	
HZ:		AMB:	
ADDITIONAL INFORMATION			
WEIGHT		POLES	
GPM		LRA (Load-Rated Amps)	
MANU. WARR. START		MANU. WARR. END	
LUBE SYSTEM TYPE (Seal Water, Grease, Oil)			
GEAR-PINION			
MOUNTING POSITION (H-Horz, V-Ver, O-Other)			
TAG #		CAPACITY	
YEAR BUILT		DESIGN PRESS.	
SHAFT RIGID COUPLING		SHAFT SEAL	
IMPELLER TYPE		IMPELLER DIAMETER	
PISTON DIAMETER		SHAFT SIZE	
MAX SPEC GRAVITY		DESIGN TEMP	
KW		KVA	
FREQUENCY		PF	
FULL LOAD		INSULATION CLASS	
WIRE		PHASES:	
TEMP RISE		TEMP AMB	
MATERIAL OF CONSTRUCTION			
STRUCTURE			
LINER			
O/M REFERENCE MANUAL			
MAINTENANCE			
PUMP CURVES			

ATTACHMENT B
ESTABLISHED CITY OF HOUSTON POSITION CODES

Position Code	Position Description
ACB	Activated Carbon Transfer Blower
ACC	Hydraulic Accumulator
ACD	Activated Carbon Rotodip
ACP	Activated Carbon Feed Pump
ACT	Activated Carbon Feed Tank
AFP	Alum Feed Pump
AFT	Alum Feed Tank
AMFP	Ammonia Feed Pump
AMFT	Ammonia Feed Tank
AMST	Ammonia Storage Tanke
AMTP	Ammonia Transfer Pump
ANLZ	Analyzer
AST	Alum Storage Tank
ATP	Alum Transfer Pump
BLDG	Building
BLWR	Blower
BP	Belt Press
BSN	Basin
BWC	Backwash Clarifier
BWP	Backwash Pump
BWT	Backwash Tank
BWW	Backwash Waste Pump
BWWPS	Backwash Waste Pump Station
CAS	Chemical Application Station
CBT	Carbon Slurry Batching Tank
CENT	Centrifuge
CFP	Caustic Feed Pump
CFT	Caustic Feed Tank
CHL	Chlorinator
CLE	Cl2 Evaporator
CLF	Clarifier
CLM	Collector Mechanism
CLS	Classifier
CLW	Clearwell
CMPR	Compressor
CNL	Canal
CONV	Conveyor
CPEQ	Computer Equipment
CRN	Crane
CSS	Carbon Storage Silo

ATTACHMENT B
ESTABLISHED CITY OF HOUSTON POSITION CODES cont'd

Position Code	Position Description
CST	Caustic Storage Tank
CTP	Caustic Transfer Pum
CYC	Cyclone
ELEV	Elevators
FBAY	Forebay
FBM	Flocculator Basin Motor
FBN	Flocculator Basin
FBNA	Flocculator Basin Area
FEN	Fence
FFP	Flouride Feed Pump
FFT	Flouride Feed Tank
FLT	Filter
FLTA	Filter Area
FST	Flouride Acid Tank
FTP	Fluoride Transfer Pump
GRNDS	Grounds
GST	Ground Storage Tank
HSP	High Service Pump
HSPS	High Service Pump Station
HST	Hoist
HVAC	HVAC Equipment
LCP	Local Control Panel
LFST	Lift Station
LSB	Lime Storage Bin
LSFP	Lime Slurry Feed Pump
LSP	Low Service Pump
LSPA	Low Service Pump Area
LST	Lime Slurry Tank
LVLSYS	Level System
MBP	Manual Backup Panel
MCC	MCC/Switchgear
MCC	Motor Control Center
MR	Meter
MTR	Motor
MXR	Mixer
PBP	Polymer Batching Pump
PFP	Polymer Feed Pump
PIP	Piping
PMP	Pump
PMT	Polymer Mixing Tank

ATTACHMENT B
ESTABLISHED CITY OF HOUSTON POSITION CODES cont'd

Position Code	Position Description
POB	Process Overflow Basin
PST	Polymer Storage Tank
PTP	Polymer Transfer Pump
RFP	Return Flow Pump
RM	Room
RSP	Raw Sludge Pump
RSPF	Return Flow Pump Station
RST	Raw Sludge Thickener
SBN	Settling Basin
SBNA	Settling Basin Area
SCADA	SCADA & Instrumentation
SCL	Scales
SCR	Screen
SLDGGR	Sludge Grinder
SLS	Sewer Lift Station
SPMPSYS	Sump Pump System
SUBSTN	Electrical Substation
SWPS	Surface Wash Pump Station
SYSAA	Systems Area
TFP	Transfer Pump
TK	Tanks
TPS	Transfer Pump Station
TRF	Transformer
TSP	Thickened Sludge Pump
TWS	Traveling Water Screen
VLV	Valve
WW	Wet Well

Section 01725

FIELD SURVEYING

PART 1 G E N E R A L

1.01 QUALITY CONTROL

A. Conform to State of Texas laws for surveys requiring licensed surveyors. Employ a surveyor acceptable to Project Manager if required by the Contract.

1.02 MEASUREMENT AND PAYMENT

A. UNIT PRICES

1. No separate payment will be made for field surveying. Include cost in unit price for related items.

1.03 SUBMITTALS

A. Conform to requirements of Section 01330 - Submittal Procedures.

B. Submit name, address, and telephone number of Surveyor to Project Manager before starting survey work.

C. Submit documentation verifying accuracy of survey work on request.

D. Submit certificate signed by Surveyor, that elevations and locations of the Work are in conformance with the Contract.

1.04 PROJECT RECORD DOCUMENTS

A. Maintain a complete and accurate log of control and survey work as it progresses.

B. Prepare a certified survey setting forth dimensions, locations, angles, and elevations of construction and site work upon completion of foundation walls and major site improvements.

C. Submit record documents under provisions of Section 01785 - Project Record Documents.

1.05 EXAMINATION

A. Verify locations of survey control points prior to starting the Work.

B. Notify Project Manager immediately if any discrepancies are discovered.

1.06 SURVEY REFERENCE POINTS

A. The City will establish survey control datum as provided in Document 00700 - General Conditions and as indicated on Drawings. Inform Project Manager in Advance of time horizontal and vertical control points will be established so

verification deemed necessary by Project Manager may be done with minimum inconvenience to the City or Contractor.

B. Locate and protect survey control points prior to starting site work; preserve permanent reference points during construction.

C. Notify Project Manager a minimum of 48 hours before relocation of reference points is needed due to changes in grades or other reasons.

D. Promptly report loss or destruction of reference points to Project Manager.

E. Reimburse the City for cost of reestablishment of permanent reference points disturbed by construction operations.

1.07 SURVEY REQUIREMENTS

A. Utilize recognized engineering survey practices.

B. Establish a minimum of two permanent benchmarks on site, referenced to established control points. Record horizontal and vertical location data on Project record documents.

C. Establish elevations, lines and levels to provide quantities required for measurement and payment and for appropriate controls for the Work. Locate and lay out the following with appropriate instruments:

1. Site improvements including grading, fill and topsoil placement, utilities, and footings and slabs

2. Grid or axis for structures

3. Building foundation, column locations, and ground floor elevations

D. Periodically verify layouts.

PART 2 P R O D U C T S - Not Used

PART 3 E X E C U T I O N - Not Used

END OF SECTION

Section 01731

CUTTING AND PATCHING

PART 1 G E N E R A L

1.01 SECTION INCLUDES

A. Cutting, patching and fitting of the Work or work under construction. Coordinating Installation or connection of the Work to existing facilities, or uncovering work for access, inspection or testing and related submittals.

1.02 MEASUREMENT AND PAYMENT

A. UNIT PRICES

1. No separate payment will be made for cutting and patching. Include cost in unit price for related items.

1.03 CUTTING AND PATCHING

A. Perform activities to avoid interference with facility operations and work of others in accordance with Document 00700 - General Conditions of Contract.

B. Execute cutting and patching, including excavation, backfill and fitting to:

1. Remove and replace defective work or work not conforming to Drawings and Specifications;

2. Take samples of installed work as required for testing;

3. Remove construction required to provide for specified alterations or additions to existing work;

4. Uncover work to allow inspection or reinspection by Project Manager or regulatory agencies having jurisdiction;

5. Connect uninstalled work to completed work in proper sequence;

6. Remove or relocate existing utilities and pipes that obstruct work;

7. Make connections or alterations to existing or new facilities;

8. Provide openings, channels, chases and flues and cut, patch, and finish; if required; or

9. Provide protection for other portions of the Work.

C. Restore existing work to a condition equal to or better than that which existed Prior to cutting and patching, and to standards required by Specifications.

D. Support, anchor, attach, match, trim and seal materials to work of others. Unless otherwise specified, Furnish and Install sleeves, inserts, and hangers required for execution of the Work.

E. Provide shoring, bracing and support necessary to maintain structural integrity and to protect adjacent work from damage during cutting and patching. Request written approval from Project Manager, before cutting structural members such as beams, anchors, lintels, or other supports. Follow approved submittals, as applicable.

F. Match new materials to existing materials by bonding, lapping, mechanically tying, anchoring or other effective means in order to prevent cracks and to minimize evidence of patching. Conceal effects of demolition and patching by blending new construction to existing surfaces. Avoid obvious breaks, joints or changes of surface appearance unless shown on Drawings or authorized by Project Manager.

1.04 SUBMITTALS

A. Conform to requirements of Section 01330 - Submittal Procedures.

B. Submit a written request to Project Manager for consent to proceed, before conducting cutting operations that might affect structural integrity, design function, City operations, or work of another contractor.

C. Include the following in submittal:

1. Identification of Project

2. Description of affected work

3. Necessity for cutting

4. Effect on other work and on structural integrity

5. Describe the proposed work including:
   a. Scope of cutting and patching
   b. Contractor, Subcontractor or Supplier who will execute the work
   c. Proposed Products
   d. Extent of refinishing
   e. Schedule of operations

6. Alternatives to cutting and patching

D. When work conditions or schedules dictate the need for change of materials or methods, submit a written recommendation to Project Manager that includes:

1. conditions necessitating the change;

2. recommendations for alternative materials or methods; and

3. submittals required for proposed substitutions

E. Notify Project Manager in writing when work will be uncovered for observation. Do not begin cutting or patching operations until authorized by Project Manager.

1.05 CONNECTIONS TO EXISTING FACILITIES

A. Perform construction operations necessary to complete connections and tie-ins to existing facilities. Keep existing facilities in continuous operation unless otherwise permitted in the Specifications or approved in writing by Project Manager.

B. Coordinate interruption of service requiring connection to existing facilities with Project Manager. Do not bypass wastewater or sludge to waterways. Provide temporary pumping facilities to handle wastewater if necessary. Use temporary bulkheads to minimize disruption. Provide temporary power and piping to facilitate construction where necessary.

C. Submit a detailed schedule of proposed connections, including shut-downs and tie-ins. Include proposed time and date as well as anticipated duration of work. Coordinate the connection schedule with the construction schedule.

1. Submit specific times and dates to Project Manager at least 48 hours in advance of proposed work.

D. Procedures and Operations:

1. Operate existing pumps, valves and gates in required sequence under supervision of Project Manager. Do not operate valves, gates or other items of equipment without Project Manager's knowledge.

2. If possible, test equipment under operating conditions before making final tie-ins to connect equipment to existing facility.

3. Coordinate work and schedules. Notify Project Manger at least 48 Hours before shutdowns or bypasses are required.

PART 2 P R O D U C T S Not Used

PART 3 E X E C U T I O N Not Used

END OF SECTION

Section 01732

PROCEDURE FOR WATER VALVE ASSISTANCE

PART 1 G E N E R A L

1.01 SECTION INCLUDES

A. Operation of valves. City of Houston employees will operate existing valves. Contractor's employees may operate new valves included in the Project prior to acceptance by the City.

1.02 PROCEDURE

A. Perform activities listed in Exhibit A attached to this Section.

1.03 SUBMITTALS

A. Submit request for work order planning meetings in accordance with Exhibit A. Include information listed in Step 1 of Exhibit A, attached to this Section.

1.04 CANCELLATION

A. Contractor, Project Manager, or Public Utilities Division may cancel a scheduled valve assistance appointment at no extra cost or payment to Contractor. Contractor shall notify City's appointed Project Inspector ("Inspector") 24 hours in advance of cancellation. Inspector shall notify Central Operation Service (COS) immediately upon receipt of cancellation notice. Cancellation may be caused by bad weather, preparation work taking longer than anticipated, or unforeseen delays by one or more of the three parties.

PART 2 P R O D U C T S - Not Used

PART 3 E X E C U T I O N - Not Used

END OF SECTION

PAGE LEFT INTENTIONALLY BLANK

EXHIBIT A

PROCEDURE FOR VALVE ASSISTANCE

The following procedure will be used by Utility Maintenance Branch personnel when completing a service request from individual Contractors, through Inspector, for operation of existing water valves.

ROUTINE VALVE ASSISTANCE REQUEST (NON-EMERGENCY JOBS):

Step 1. a. When notified by Contractor, Inspector will schedule a work order planning meeting by calling Central Operation Service (COS) at **(713) 295-5521** and providing information shown below. The work order planning meeting shall be conducted a minimum of three days after the request; excluding weekends, holidays, inclement weather days, and the day of the call.

Location of Work (Street Intersection)	Project #
Project Description	Contractor (Company Name)
Job Superintendent's Name	Superintendent's Office #/Mobile #/Pager #
Contractor's Emergency Information	Name and Phone #/Mobile #/Pager #
Inspector/Senior Inspector	Name, Phone #/Mobile #/Pager #
Date & Time assistance is requested	

b. COS will create a work order for each wet connection, cut and plug, etc. that will be designated as a "Code 40" (Private Contractor).

c. COS will give Inspector the work order number. This work order number must be used as a reference in all communications regarding this request for Valve Assistance.

d. Valve personnel must have the work order number on their route sheet. When valve personnel arrive at the job site for the Work Order Planning Meeting between Inspector, Contractor, and Utility Maintenance valve personnel, they will verify the street intersection and work order number with the Inspector before beginning Work Order Planning Meeting.

e. During Work Order Planning Meeting, the work to be performed will be outlined and the actual date work will be performed will be mutually determined by Inspector, Contractor and City's Utility Maintenance Division valve personnel, based upon relevant factors such as preparatory work needed, customer requirements, etc.

f. Valve personnel will perform work specifically outlined in the work order requested. Also, Utility Maintenance Branch valve personnel will only operate existing water valves. Inspector must contact COS and request a new work order for additional work.

g. Valve personnel will contact the dispatcher and advise when the job is complete. Valve personnel will list all appropriate information on the Crew Activity Report.

Step 2. Should valve personnel not be able to keep an appointment to provide valve assistance, Utility Maintenance Branch will provide notification to appropriate Inspector by phone at least 24 hours prior, with that fact and rescheduling information, if available.

Step 3. Inspector will notify COS if valve personnel have not arrived at the site within 30 minutes of scheduled appointment. If Contractor is not ready when valve operator arrives to provide valve assistance, the City shall charge Contractor $50.00 per hour, starting 15 minutes after the scheduled appointment time, minimum one hour charge.

Step 4. Contractor will not be due delay claims or downtime if Utility Maintenance Branch has notified Inspector that they will not be able to provide valve assistance as scheduled.

Step 5. Test installed new valves in the presence of Inspector before substantial completion inspection is scheduled. Place new valves in open position on or before the Date of Substantial Completion.

Step 6. Project Manager will notify, in writing, Utility Maintenance Branch two months before the warranty expires to report any problems they have with new water lines. Project Manager will notify Contractor about these problems.

EMERGENCY REQUEST FOR VALVE ASSISTANCE PROCEDURE:

Step 1. When notified by Contractor, Inspector will request emergency Valve Assistance due to a broken line/service, etc. by calling COS at **(713) 295-5521** and providing the following information:

Location of Work (Street Intersection)	Project #
Project Description	Superintendent's Office #/Mobile #/Pager #
Contractor (Company Name)	Name and Phone #/Mobile #/Pager #
Job Superintendent's Name	Name, Phone #/Mobile #/Pager #
Contractor's Emergency Information	
Inspector/Senior Inspector	
Date & Time assistance is requested	

Step 2. COS will create an emergency work order number and describe the work to be performed.

Step 3. COS will give Inspector the emergency work order number. Reference work order number in all communications regarding request for Valve Assistance.

Step 4. COS will contact designated valve personnel and assign emergency work order. Dispatcher will follow standard COS procedures if this situation occurs after normal working hours.

Step 5. Valve personnel must have the emergency work order number on the route sheet. When valve personnel arrive at the job site for emergency work, they will verify the street intersection and emergency work order number with Inspector prior to beginning work requested for operating existing water valves. Valve personnel will coordinate verification of street intersection and work order number with Inspector prior to performing work.

Section 01740

SITE RESTORATION

PART 1 GENERAL

1.01 SECTION INCLUDES

A. Restoration of site affected by the Work in public or private property, including pavement, esplanades, sidewalks, driveways, fences, lawns and landscaping.

1.02 MEASUREMENT AND PAYMENT

A. Unit Prices.

1. Payment for restoration of Project site disturbed by utility construction operations is on a linear foot basis. Measurement will be as provided for corresponding utility in each Specification section. No separate payment made for branch pipe, valves and, other associated work for utilities. Measurement for restoration with multiple utilities within the same right-of-way will be on a linear foot basis for only one utility.

2. No separate payment made for facility or roadway projects. Include cost in the surface improvements associated with the facility or roadway construction.

3. Payment includes required site restoration within the right-of-way or easement regardless of size or type of pipe, method of construction, paved or unpaved areas or thickness and width of pavement.

4. No separate payment made for site restoration for service connections under this Section. Include cost in appropriate utility section.

5. Refer to Section 01270 – Measurement and Payment for Unit Price procedures.

B. Stipulated Price (Lump Sum) Contracts. If Contract is Stipulated Price Contract, include payment for work under this section in total Stipulated Price.

1.03 DEFINITIONS

A. Phase: Locations identified on the plans and listed in Section 1110 – Summary of Work under Work Sequence.

B. Site Restoration: Replacement or reconstruction of Site Improvements located in rights-of-way, easements, public property, and private property affected or altered by the Work.

C. Site Improvement: Includes pavement, curbs and gutters, esplanades, sidewalks, driveways, fences, lawns, irrigation systems, landscaping, and other improvements in existence at the Project site before commencement of construction operations.

1.04 SUBMITTALS

A. Conform to requirements of Section 01330 - Submittal Procedures.

B. Schedule of testing, service connections, abandonment, backfill, and site restoration.

C. Sample of notices to residents outlining their responsibility for maintenance of site improvements adjacent to the Project that are not disturbed by construction operations

1.05 SCHEDULING

A. Schedule testing, service connections, abandonment, backfill and site restoration immediately following completion of pipe laying work or paving within each block or line segment.

B. Phased Construction:

1. Commencement of subsequent Phase will follow scheduling of site restoration of prior Phase. Limit work to a maximum of two Phases of the project.

C. Construction of Projects with no Phases listed in Section 01110- Summary of Work:

1. Complete site restoration prior to disturbing over 50% of total project linear feet or 2,000 linear feet, whichever is greater, of right-of-way or easement.

2. Limit work to a maximum of 50% of total project linear feet or 2,000 linear feet, whichever is greater, of right-of-way and easement. Commence work in additional right-of-way or easement after completion of site restoration.

PART 2 PRODUCTS

2.01 MATERIALS

A. Pavement, Sidewalks and Driveways: Materials specified in Section 02951 - Pavement Repair and Resurfacing.

B. Seeding and Sodding: Sod specified in Section 02922 - Sodding and Seed specified in Section 02921 - Hydromulch Seeding.

C. Trees, Shrubs and Plantings: Conform to requirements of Section 01562 – Tree and Plant Protection.

PART 3 EXECUTION

3.01 Preparatory Work

A. Provide cleanup and restoration crews to work closely behind pipe laying and roadway construction crews, and where necessary, during testing, service restoration, abandonment, backfill and surface restoration.

B. Water Lines: Unless otherwise approved by Project Manager, comply with the following:

1. Once Project Manager approves work within a Phase, immediately begin preparatory work for disinfection effort.

2. No later than three days after completing disinfection preparatory work, submit to City appropriate request for disinfection.

3. If City fails to perform initial disinfection of lines in accordance with Section 2514 - Disinfection of Water Lines, within seven days from submission of appropriate request, and if approved by Project Manager, pipe laying operations may continue beyond approved limits until the City responds.

4. Immediately after transfer of services, begin abandonment of old water lines and site restoration.

C. Wastewater Lines:

1. Once Project Manager approves work within a Line Segment, immediately begin preparatory work for testing effort.

2. No later than three days after completing preparatory work for testing, initiate testing work.

3. Immediately after transfer of service connections, begin abandonment of old wastewater lines, and site restoration.

D. Street Construction and Paving Projects

1. Once Project Manager approves work within a Line Segment or block, immediately begin preparatory work for testing effort.

2. No later than three days after completing preparatory work for testing, initiate testing work.

3. Immediately after testing begin site restoration.

E. Street Construction and Paving Projects

1. Once Project Manager approves work within a block, immediately begin preparatory work for sidewalk construction, sodding and hydromulching and tree planting.

2. No later than seven days after completing preparatory work, initiate construction.

3.02 CLEANING

A. Remove debris and trash to maintain a clean and orderly site in accordance with requirements of General Conditions and Section 01576 - Waste Material Disposal.

3.03 LANDSCAPING AND FENCES

A. Seeding and Sodding.

1. Remove construction debris and level area with bank sand so that new grass surface matches level of existing grass and maintains pre-construction drainage patterns. Level and fill minor ruts or depressions caused by construction operations with bank sand, where grass is still viable.

2. Restore previously existing turfed areas with sod and fertilize in accordance with Section 02922 - Sodding. Sod to match existing turf.

3. Restore unpaved areas not requiring sodding with hydromulch seeding conforming to Section 02921 - Hydromulch Seeding.

B. Trees, Shrubbery and Plants.

1. Remove and replant trees, shrubs, and plants in accordance with requirements of Section 01562 – Tree and Plant Protection.

C. Fence Replacement.

1. Replace removed or damaged fencing to equal or better condition than existed prior to construction, including concrete footings and mow strips. Provide new wood posts, top and bottom railing and panels. Metal fencing material, not damaged by the Work, may be reused.

2. Remove and dispose of damaged or substandard material.

3.04 MAINTENANCE

A. Maintain shrubs, plantings, sodded areas and seeded areas.

B. Replace shrubs, plantings and seeded or sodded areas that fail to become established.

C. Refer to Section 01562 - Tree and Plant Protection, Section 02921 - Hydromulch Seeding and Section 02922 - Sodding for maintenance requirements.

END OF SECTION

Section 01755

STARTING SYSTEMS

PART 1 G E N E R A L

1.01 SECTION INCLUDES

A. Starting systems.

B. Demonstration and instructions.

C. Testing, adjusting and balancing.

PART 2 P R O D U C T S - Not Used

PART 3 E X E C U T I O N

3.01 PREPARATION

A. Coordinate schedule for start-up of various equipment and systems.

B. Notify Project Manager seven days prior to startup of each item.

C. Verify each piece of equipment or system has been checked for proper lubrication, drive rotation, belt tension, control sequence, or other damage-causing conditions.

D. Verify tests, meter readings, and specified electrical characteristics agree with those required by equipment or system manufacturer.

E. Verify wiring and support components for equipment are complete and tested.

F. Execute start-up under supervision in accordance with manufacturer's instructions.

G. When specified in individual Specification sections, require manufacturer to provide an authorized representative to be present at the site to inspect, check and approve equipment or system installation prior to start-up, and to supervise placing equipment or system in operation.

H. Submit written report indicating that equipment or system has been properly installed and is functioning correctly.

3.02 DEMONSTRATION AND INSTRUCTIONS

A. Demonstrate operation and maintenance of Products to Project Manager two weeks prior to Date of Substantial Completion.

B. Utilize O&M Manuals as the basis for instruction. Review contents of manual with Project Manager in detail to explain aspects of operation and maintenance.

C. Demonstrate start-up, operation, control, adjustment, trouble-shooting, servicing, maintenance, and shutdown of each item of equipment at agreed-upon times, at the equipment location.

D. Prepare and insert additional data in O&M Manuals when the need for additional data becomes apparent during instruction.

E. At a minimum, Contractor will demonstrate the following:

1. Products and procedures to be used in maintaining various surfaces, e.g., counter tops, toilet partitions, tile floors and carpeting;

2. procedures to set and maintain landscape irrigation system;

3. procedures to set and maintain security and fire alarm systems; and

4. procedures to set and maintain HVAC systems.

3.03 TESTING, ADJUSTING AND BALANCING

A. Contractor shall appoint, employ and pay for the services of an independent firm to perform testing, adjusting and balancing.

B. Submit reports by the independent firm to Project Manager describing observations and results of tests and signifying compliance or non-compliance with specified requirements and requirements of the Contract.

END OF SECTION

Section 01770

CLOSEOUT PROCEDURES

PART 1 GENERAL

1.01 SECTION INCLUDES

A. Procedures to establish Date of Substantial Completion.

B. Closeout procedures for final submittals, O&M data, warranties, spare parts and maintenance materials.

C. Texas Department of Licensing and Regulation (TDLR) inspection for Texas Accessibility Standards (TAS) compliance.

1.02 SUBSTANTIAL COMPLETION

A. Comply with Document 00700 - General Conditions regarding Date of Substantial Completion when Contractor considers the Work, or portion thereof designated by Project Manager, to be substantially complete.

B. Insure the following items have been completed when included in the Work, prior to presenting a list of items to be inspected by Project Manager for issuance of a Certificate of Substantial Completion:

1. cutting, plugging, and abandoning of water, wastewater, and storm sewer lines, as required by Contract documents for each item;

2. construction of, and repairs to, pavement, driveways, sidewalks, and curbs and gutters;

3. sodding and hydromulch seeding, unless waived by Project Manager in writing;

4. general clean up including pavement markings, transfer of services, successful testing and landscape;

5. additional requirements contained in Section 01110 - Summary of Work.

C. Assist Project Manager with inspection of Contractor's list of items and complete or correct the items, including items added by Project Manager, within specified time period.

D. Should Project Manager's inspection show failure of Contractor to comply with requirements to obtain Date of Substantial Completion, including those items in Paragraph 1.02 B. of this section, Contractor shall complete or correct the items, before requesting another inspection by Project Manager.

1.03 CLOSEOUT PROCEDURES

A. Comply with Document 00700 - General Conditions regarding final completion and final payment when the Work is complete and ready for Project Manager's final inspection.

B. Provide Project Record Documents in accordance with Section 01785 - Project Record Documents.

C. Complete or correct items on punch list, with no new items added. Address new items during warranty period.

D. The City will occupy portions of the Work as specified in other sections.

1.04 FINAL CLEANING

A. Execute final cleaning prior to final inspection.

B. For facilities, clean interior and exterior glass and surfaces exposed to view; remove temporary labels, stains and foreign substances, polish transparent and glossy surfaces, vacuum carpeted and soft surfaces.

C. Clean equipment and fixtures to sanitary condition.

D. Clean or replace filters of operating equipment.

E. Clean debris from roofs, gutters, down spouts, and drainage systems.

F. Clean site; sweep paved areas, and rake clean landscaped surfaces.

G. Remove waste and surplus materials, rubbish, and temporary construction facilities from site following final test of utilities and completion of the Work.

1.05 ADJUSTING

A. Adjust operating equipment to ensure smooth and unhindered operation. Value of this testing and adjusting is five percent of Lump Sum Price in the Schedule of Values for item being tested.

1.06 OPERATION AND MAINTENANCE DATA

A. Submit O&M data as noted in Section 01330 - Submittal Procedures.

B. Five percent of lump sum amount of each piece of equipment as indicated in Schedule of Unit Price Work or Schedule of Values will be paid after the required O&M data submittals are received and approved by Project Manager.

1.07 WARRANTIES

A. Provide one original of each warranty from Subcontractors, Suppliers, and manufacturers.

B. Provide Table of Contents and assemble warranties in a 3-ring/D binder with durable plastic cover.

C. Submit warranties prior to final progress payment.

D. Warranties shall commence in accordance with the requirements in Document 00700 - General Conditions.

1.08 SPARE PARTS AND MAINTENANCE MATERIALS

A. Provide Products, spare parts, maintenance and extra materials in quantities specified in individual Specification sections.

B. Deliver to a location within the City limits as directed by Project Manager. Applicable items must be delivered prior to issuance of a final Certificate for Payment.

PART 2 P R O D U C T S - Not Used

PART 3 E X E C U T I O N - Not Used

END OF SECTION

Section 01782

OPERATIONS AND MAINTENANCE DATA

PART 1 G E N E R A L

1.01 SECTION INCLUDES

A. Submittal requirements for equipment and facility Operations and Maintenance (O&M) Manuals

1.02 MEASUREMENT AND PAYMENT

A. Measurement for equipment O&M Manuals is on a lump sum basis equal to five percent of the individual equipment value contained in Schedule of Unit Prices or Schedule of Values. The lump sum amount may be included in the first Progress Payment following approval of the O&M Manuals by Project Manager.

1.03 SUBMITTALS

A. Conform to requirements of Section 01330 - Submittal Procedures. Submit a list of O&M Manuals and parts manuals for equipment to be incorporated into the Work.

B. Submit documents with 8-1/2 x 11-inch text pages, bound in 3-ring/D binders with durable plastic covers.

C. Print "OPERATION AND MAINTENANCE INSTRUCTIONS", Project name, and subject matter of binder on covers when multiple binders are required.

D. Subdivide contents with permanent page dividers, logically organized according to the Table of Contents, with tab titling clearly printed under reinforced laminated plastic tabs.

E. O&M Manual contents: Prepare a Table of Contents for each volume, with each Product or system description identified.

1. Part 1 - Directory: Listing of names, addresses, and telephone numbers of Design Consultant, Contractor, Subcontractors, and major equipment Suppliers.

2. Part 2 - O&M instructions arranged by system. For each category, identify names, addresses, and telephone numbers of Subcontractors and Suppliers and include the following:
   a. Significant design criteria.
   b. List of equipment.
   c. Parts list for each component.
   d. Operating instructions.
   e. Maintenance instructions for equipment and systems.
   f. Maintenance instructions for special finishes, including recommended cleaning methods and materials and special precautions identifying detrimental agents.

3. Part 3 - Project documents and certificates including:
   a. Shop Drawings and relevant data.
   b. Air and water balance reports.
   c. Certificates.
   d. Photocopies of warranties.

F. Submit two copies of O&M Manuals and parts manuals, for review, within one month prior to placing the equipment or facility in service.

G. Submit one copy of completed volumes in final form 10 days prior to final inspection. One copy with Project Manager comments will be returned after final inspection. Revise content of documents based on Project Manager's comments prior to final submittal.

H. Revise and resubmit three final volumes within 10 days after final inspection.

1.04 EQUIPMENT O&M DATA

A. Furnish O&M Manuals, prepared by manufacturers for all equipment. Manuals must contain, as a minimum, the following:

1. Equipment functions, normal operating characteristics, and limiting conditions.

2. Assembly, Installation, alignment, adjustment, and checking instructions.

3. Operating instructions for start-up, normal operation, regulation and control, normal shutdown, and emergency shutdown.

4. Detailed drawings showing the location of each maintainable part and lubrication point with detailed instructions on disassembly and reassembly of the equipment.

5. Troubleshooting guide.

6. Spare parts list, predicted life of parts subject to wear, lists of spare parts recommended to be on hand for both initial start-up and for normal operating inventory, and local or nearest source of spare parts availability.

7. Outline, cross-section, and assembly drawings with engineering data and wiring diagrams.

8. Test data and performance curves.

B. Furnish parts manuals for all equipment, prepared by the equipment manufacturer, which contain, as a minimum, the following:

1. Detailed drawings giving the location of each maintainable part.

2. Spare parts list with predicted life of parts subject to wear, lists of spare parts recommended on hand for both initial start-up and for normal operating inventory, and local or nearest source of spare parts availability.

PART 2 P R O D U C T S - Not Used

PART 3 E X E C U T I O N - Not Used

END OF SECTION

Section 01785

PROJECT RECORD DOCUMENTS

PART 1 GENERAL

1.01 SECTION INCLUDES

A. Maintenance and submittal of record documents and Samples.

1.02 MAINTENANCE OF DOCUMENTS AND SAMPLES

A. Maintain one record copy of documents at the site in accordance with Document 00700 - General Conditions.

B. Store record documents and Samples in field office, if a field office is required by the Contract, or in a secure location. Provide files, racks, and secure storage for record documents and Samples.

C. Label each document "PROJECT RECORD" in neat, large, printed letters.

D. Maintain record documents in a clean, dry, and legible condition. Do not use record documents for construction purposes. Do not use permit drawings to record Modifications to the Work.

E. Keep record documents and Samples available for inspection by Project Manager.

F. Bring record documents to progress review meetings for viewing by Project Manager and, if applicable, Design Consultant.

1.03 RECORDING

A. Record information legibly with red ink pen on a set of blueline opaque drawings, concurrently with construction progress. Maintain an instrument on site at all times for measuring elevations accurately. Do not conceal work until required information is recorded

B. Contract Drawings and Shop Drawings: Mark each item to record completed Modifications, or when minor deviations exist, the actual construction including:

1. Measured depths of elements of foundation in relation to finish first floor datum.
2. Measured horizontal locations and elevations of Underground Facilities and appurtenances, referenced to permanent surface improvements.

3. Elevations of Underground Facilities referenced to City of Houston benchmark utilized for the Work.

4. Measured locations of internal utilities and appurtenances concealed in construction, referenced to visible and accessible features of the Work.

5. Dimensions and details of field changes

6. Changes made by Modifications.

7. Details not on original Drawings.

8. References to related Shop Drawings and Modifications.

C. Survey all joints of water mains at the time of construction. Record on Drawings, water main invert elevation, elevation top of manway, and centerline horizontal location relative to baseline.

D. For large diameter water mains, mark specifications and addenda to record:

1. Manufacturer, trade name, catalog number and Supplier of each Product actually Installed.

2. Changes made by Modification or field order.

3. Other matters not originally specified.

E. Annotate Shop Drawings to record changes made after review.

1.04 SUBMITTALS

A. At closeout of the Contract, deliver Project record documents to Project Manager.

PART 2 P R O D U C T S - Not Used

PART 3 E X E C U T I O N - Not Used

END OF SECTION

SECTION 03100

CONCRETE FORMWORK

PART 1 GENERAL

1.01 SECTION INCLUDES

A. Design, construction, erection and removal of structural concrete formwork.

1.02 UNIT PRICES

A. No separate payment will be made for concrete formwork under this Section. Include payment in unit price for structural concrete.

B. Refer to Section 01270 - Measurement and Payment for unit price procedures.

1.03 REFERENCE STANDARDS

A. ACI 117 - Standard Tolerances for Concrete Construction and Materials.

B. ACI 347 - Recommended Practice for Concrete Formwork.

C. U.S. Product Standard PS 1 Construction and Industrial Plywood.

D. U.S. Product Standard PS 20 American Softwood Lumber Standard.

1.04 SUBMITTALS

A. Conform to Section 01330 – Submittal Procedures.

B. Shop Drawings: Show location, member size and loading of shoring. When reshoring is permitted, submit plans showing locations and member size of reshoring.

C. Product Data and Samples:

1. Corrugated Fiberboard Carton Forms: Submit certification of compliance with design criteria, description of forms, and one-foot-long sample.

2. Form-coating Materials: Submit trade or brand names of manufacturers and complete description of products.

3. Form ties and related accessories, including taper tie plugs, if taper ties are used. Form gaskets.

D. Detailed Layout for Slip-forming: Submit detailed layout of proposed slipforming, including description of equipment, rate of progress, and other data to show suitability of method. Show provisions for ensuring attainment of required concrete surface finish.

PART 2 PRODUCTS

2.01 MATERIAL

A. Smooth Forms: New plywood, metal, plastic, tempered concrete-form hardboard, dressed lumber faced with plywood or fiberboard lining, or metal-framed plywood-faced panel material, to provide continuous, straight, smooth surfaces. Form material shall be free of raised grain, torn surfaces, worn edges, patches, dents or other defects. Furnish material in largest practical sizes to minimize number of joints and, when indicated on Drawings, conform to joint system indicated. Form material shall have sufficient strength and thickness to withstand pressure of newly placed concrete without bow or deflection.

B. Rough Forms: Plywood, metal, dressed or undressed lumber free of knots, splits or other defects, or other material acceptable to Project Manager of sufficient strength and thickness to withstand pressure of newly placed concrete without bow or deflection.

C. Plywood: Conform to PS 1, Class 1.

D. Lumber: Conform to PS 20.

E. Edge Forms and Intermediate Screed Strips: Type and strength compatible with the screed equipment and methods used.

F. Plastic Forms: One-piece forms for domes, beams and pan joists. Single lengths for columns not exceeding height of 7 feet 6 inches. For columns over 7 feet 6 inches, use 7-foot 6-inch sections and filler sections as needed. To facilitate removal of pan joist forms, taper sides one inch per foot.

G. Metal Pan Joist Forms: Removable type; fabricated of minimum 14-gauge steel; one piece between end closures. Adjustable forms not allowed. Taper sides one inch per foot to facilitate removal.

H. Earth Cuts for Forms:

1. Use earth cuts for forming unexposed sides of grade beams cast monolithically with slabs on grade.

2. Where sides of excavations are stable enough to prevent caving or sloughing, following surfaces may be cast against neat-cut excavations:

   a. Sides of footings.

   b. Inside face of perimeter grade beams not monolithic with slab on grade. When inside face is cast against earth, increase beam width indicated on Drawings by one inch.

   c. Both faces of interior grade beams not monolithic with slab on grade. When grade beam is cast against earth, increase beam width indicated on Drawings by 2 inches.

I. Corrugated Fiberboard Carton Forms:

1. Corrugated fiberboard carton forms, when called for, are intended to form a void space beneath pile-supported and pier-supported slabs and other structural elements as shown.

2. Provide products of a reputable manufacturer regularly engaged in commercial production of double-faced corrugated fiberboard carton forms, constructed of waterproof paper and laminated with waterproof adhesive.

3. Fiberboard forms: Capable of supporting required dead load plus construction loads, and designed to lose their strength upon prolonged contact with moisture and soil bacteria.

4. Seal cuts and ends of each form section by dipping in waterproof wax, unless liners and flutes are completely impregnated with waterproofing.

5. Size forms as indicated on Drawings. Assemble as recommended by manufacturer, either with steel banding at 4 feet 0 inches maximum on centers, or, where liners and flutes are impregnated with waterproofing, with adequate stapling.

J. Circular Forms:

1. Form round-section members with paper or fiber tubes, constructed of laminated plies using water-resistant adhesive with wax-impregnated exterior for weather and moisture protection. Provide units with sufficient wall thickness to resist loads imposed by wet concrete without deformation. Provide manufacturer's seamless units to minimize spiral gaps and seams.

2. Fiberglass or steel forms may be used for round-section members.

K. Shores: Wood or adjustable metal, with bearing plates; with double wedges at lower end.

L. Form Ties:

1. Use commercially-manufactured ties, hangers and other accessories for embedding in concrete. Do not use wire not commercially fabricated for use as a form accessory.

2. Fabricate ties so ends or end fasteners can be removed without causing spalling of concrete faces. Depth from formed concrete face to the embedded portion: At least 1 inch, or twice the minimum dimension of tie, whichever is greater.

3. Provide waterstop feature for form ties used on liquid-containing structures and on concrete walls which will have earth backfill on one side.

4. Removable ties: Taper ties may be used when approved by the Project Manager. In the hole left by the removal of the taper tie, insert a preformed neoprene or polyurethane plug sized to seat at the center of the wall.

M. Form Coating: Commercial formulation of form oil or form-release agent having proven satisfactory performance. Coating shall not bond with, stain or otherwise adversely affect concrete surfaces, or impair their subsequent treatment, including application of bonding agents, curing compounds, paint, protective liners and membrane waterproofing.

N. Coating for Plastic Forms: Alkali-resistant gel-coat.

O. Chamfer Strips: Unless otherwise indicated on Drawings, provide 3/4-inch chamfer strips in corners of forms to produce beveled edges where required by Part 3, Execution.

P. Form Gaskets: Polyethylene rod, closed cell, one-inch diameter.

2.02 DESIGN OF FORMWORK

A. Conform to ACI 117, ACI 347 and City building codes, unless more restrictive requirements are specified or shown on Drawings. Contractor shall design and engineer concrete formwork, including shoring and bracing. Design formwork for applicable gravity loads, lateral pressure, wind loads and allowable stresses. Camber formwork to compensate for anticipated deflection during placement of concrete when required to maintain specified tolerances. Design formwork to be readily removed without impact, shock or damage to concrete surfaces and adjacent materials.

B. Slip Forming: Permitted on written approval of City Engineer. Contractor shall demonstrate suitability of method proposed.

PART 3 EXECUTION

3.01 INSTALLATION

A. Formwork Construction

1. Construct and maintain formwork so that it will maintain correct sizes of members, shape, alignment, elevation and position during concrete placement and until concrete has gained sufficient strength. Provide for required openings, offsets, sinkages, keyways, recesses, moldings, anchorages and inserts.

2. Construct forms for easy removal without damage to concrete surfaces.

3. Make formwork sufficiently tight to prevent leakage of cement paste during concrete placement. Solidly butt joints and provide backup material at joints as required to prevent leakage and fins. Provide gaskets for wall forms to prevent concrete paste leakage at their base.

4. Place chamfer strips in forms to bevel edges and corners permanently exposed to view, except top edges of walls, and slabs which are indicated on Drawings to be tooled. Do not bevel edges of formed joints and interior corners unless indicated on Drawings. Form beveled edges for vertical and horizontal corners of equipment bases. Unless otherwise indicated on Drawings, make bevels 3/4 inch wide.

5. Provide temporary openings at bases of column and wall forms and other points as required for observation and cleaning immediately before concrete is placed.

6. Where runways are required for moving equipment, support runways directly on the formwork or structural members. Do not allow runways or supports to rest on reinforcing steel.

7. Use smooth forms on formed concrete surfaces required to have smooth form finish or rubbed finish as specified in Section 03350 - Concrete Finishing.

8. Rough forms may be used on formed concrete surfaces indicated to have rough form finish as specified in Section 03350 - Concrete Finishing.

B. Forms for Surfaces Requiring Smooth Form Finish:

1. Drill forms to suit ties used and to prevent leakage of concrete mortar around tie holes. Uniformly space form ties and align in horizontal and vertical rows. Install taper ties, if used, with the large end on the wet face of the wall.

2. Provide sharp, clean corners at intersecting planes, without visible edges or offsets. Back up joints with extra studs or girts to maintain true, square intersections.

3. Form molding shapes, recesses and projections with smooth-finish materials and install in forms with sealed joints to prevent displacement.

4. Form exposed corners of beams and columns to produce square, smooth, solid, unbroken lines.

5. Provide exterior exposed edges with 3/4-inch chamfer or 3/4-inch radius.

6. Arrange facing material in orderly and symmetrical fashion. Keep number of joints to practical minimum. Support facing material adequately to prevent deflection in excess of allowable tolerances.

7. For flush surfaces exposed to view in completed structure, overlap previously-placed hardened concrete with form sheathing by approximately 1 inch. Hold forms against hardened concrete to maintain true surfaces, preventing offsets or loss of mortar.

C. Forms for Surfaces Requiring Rubbed Finish: Provide forms as specified in Paragraph 3.01B, Smooth Form Finish. Use smooth plywood or fiberboard linings or forms, in as large sheets as practicable, and with smooth, even edges and close joints.

D. Edge Forms and Screed Strips for Slabs: Set edge forms or bulkheads and intermediate screed strips for slabs to obtain required elevations and contours in finished slab surface. Provide and secure supports for types of screeds required.

E. Circular Forms: Set forms in one piece for full height of member.

F. Surfaces to Receive Membrane Waterproofing: Coordinate surface finish, anchors, reglets and similar requirements with membrane waterproofing applicator.

G. Fireproofing Steel Member: Construct forms to provide not less than the concrete thickness necessary, measured from face of steel member, to provide the required fire rating. Forms for concealed surfaces may be unlined.

H. Tolerances:

1. Unless noted otherwise on Drawings, construct formwork so concrete surfaces will conform to tolerance limits listed in Tables 03100A and 03100B at end of this Section.

2. Establish sufficient control points and bench marks as references for tolerance checks. Maintain these references in undisturbed condition until final completion and acceptance of the Work.

I. Adjustment of Formwork:

1. Use wedges or jacks to provide positive adjustment of shores and struts. After final inspection and before concrete placement, fasten in position wedges used for final adjustment of forms.

2. Brace forms securely against lateral deflections. Prepare to compensate for settling during concrete placement.

3. For wall openings, construct wood forms that facilitate necessary loosening to counteract swelling of forms.

J. Corrugated Fiberboard Carton Forms:

1. Place on smooth firm bed of suitable material to prevent vertical displacement; set tight to prevent horizontal displacement. Exercise care to avoid buckling of forms. Install in accordance with manufacturer's directions and recommendations.

2. Fit carton forms tightly around piles and piers; completely fill the space between subgrade and concrete placement with carton forms to form a void space.

3. Protect carton forms from moisture and maintain in a dry condition until concrete is placed on them. If they become wet before placement of concrete, allow them to dry and carefully inspect for strength before concrete is placed.

4. Before concrete placement, replace damaged or deteriorated forms which are incapable of supporting concrete dead load plus construction live loads.

3.02 PREPARATION OF FORM SURFACES

A. Clean surfaces of forms and embedded materials before placing concrete. Remove accumulated mortar, grout, rust and other foreign matter.

B. Coat forms for exposed or painted concrete surfaces with form oil or form-release agent before placing reinforcement. Cover form surfaces with coating material in accordance with manufacturer's printed instructions. Do not allow excess coating material to accumulate in forms or to contact hardened concrete against which fresh concrete will be placed. Remove coating material from reinforcement before placing concrete.

C. Forms for unexposed surfaces, other than retained-in-place metal forms, may be wet with water immediately before concrete placement in lieu of coating. When possibility of freezing temperatures exists, however, the use of coating is mandatory.

3.03 REMOVAL OF FORMS

A. Time Limits:

1. When repair of surface defects or finishing is required before concrete is aged, forms on vertical surfaces may be removed as soon as concrete has hardened sufficiently to resist damage from removal operations.

2. Remove top forms on sloping surfaces of concrete as soon as concrete has attained sufficient stiffness to prevent sagging. Loosen wood forms for wall openings as soon as this can be accomplished without damage to concrete. Leave formwork for water-retaining structures in place for at least 2 days. Formwork for non-water-retaining columns, walls, sides of beams and other formwork components not supporting weight of concrete may be removed after 12 hours, provided concrete has hardened sufficiently to resist damage from removal operations, and provided removal of forms will not disturb members supporting weight of concrete.

3. Forms and shoring supporting weight of concrete or construction loads: Leave in place until concrete has reached minimum strength specified for removal of forms and shoring. Do not remove such forms in less than 4 days.

B. Circular Paper or Spiral Tube Forms: Follow manufacturer's directions for form removal. Take necessary precautions to prevent damage to concrete surface. When removal is done before completion of curing time, replace form, tie in place and seal to retard escape of moisture.

C. Removal Strength:

1. Control Tests: Suitable strength-control tests will be required as evidence that concrete has attained specified strength for removal of formwork or shoring supporting weight of concrete in beams, slabs and other structural members. Furnish test cylinders and data to verify strength for early form removal.

   a. Field-cured Test Cylinders: When field-cured test cylinders reach specified removal strength, formwork or shoring may be removed from respective concrete placements.

   b. Laboratory-cured Test Cylinders: When concrete has been cured as specified for structural concrete for same time period required by laboratory-cured cylinders to reach specified strength, formwork or shoring may be removed from respective concrete placements. Determine length of time that concrete has been cured by totaling the days or fractions of days, not necessarily consecutive, during which air temperature surrounding concrete is above 50 degrees F and concrete has been damp or thoroughly sealed against evaporation and loss of moisture.

2. Compressive Strengths: The minimum concrete compressive strength for removal of formwork supporting weight of concrete is 75 percent of specified minimum 28-day strength for class of concrete involved.

3.04 RESHORING

A. When reshoring is permitted, plan operations in advance and obtain City Engineer's approval of such operations. While reshoring is under way, keep live load off new construction. Do not permit concrete in any beam, slab, column or other structural member to be subjected to combined dead and construction loads in excess of loads permitted for developed concrete strength at time of reshoring.

B. Place reshores as soon as practicable after form-stripping operations are complete but in no case later than end of day on which stripping occurs. Tighten reshores to carry required loads without over stressing construction. Leave reshores in place until tests representative of concrete being supported have reached specified strength at time of removal of formwork supporting weight of concrete.

C. Floors supporting shores under newly-placed concrete: Leave original supporting shores in place, or re-shore. Locate reshores directly under shore position above. Extend reshoring over a sufficient number of stories to distribute weight of newly-placed concrete, forms and construction live loads in such manner that design superimposed loads of floors supporting shores are not exceeded.

3.05 FORM REUSE

A. Do not reuse forms that are worn or damaged beyond repair. Thoroughly clean and recoat forms before reuse. For wood and plywood forms to be used for exposed smooth finish, sand or otherwise dress concrete contact surface to original condition or provide form liner facing material. For metal forms, straighten, remove dents and clean to return forms to original condition.

Table 03100A

TOLERANCES FOR FORMED SURFACES CONCRETE IN BUILDINGS**				
VARIATION FROM	VARIATION IN	FOR ANY 10-FOOT LENGTH	FOR ANY 20-FOOT LENGTH OR ANY BAY	MAXIMUM FOR ENTIRE DIMENSION
PLUMB OR SPECIFIED BATTER	LINES AND SURFACES OF COLUMNS, PIERS, WALLS AND ARRISES	1/4"	---	1"
	EXPOSED CORNER COLUMNS, CONTROL JOINT GROOVES, AND OTHER CONSPICUOUS LINES	---	1/4"	1/2"
LEVEL OR SPECIFIED GRADE	SLAB SOFFITS, CEILINGS, BEAM SOFFITS, AND ARRISES (MEASURED BEFORE REMOVAL OF SHORES)	1/4"	3/8"	3/4"
	EXPOSED LINTELS, SILLS, PARAPETS, HORIZONTAL GROOVES AND OTHER CONSPICUOUS LINES	---	1/4"	1/2"
DRAWING DIMENSIONS	POSITION OF LINEAR BUILDING LINES, COLUMNS, WALLS, AND PARTITIONS	---	1/2"	1"
	SIZE AND LOCATION OF SLEEVES, FLOOR OPENINGS AND WALL OPENINGS	---	---	±1/4"
	CROSS SECTION OF COLUMNS, BEAMS, SLABS, AND WALLS	---	---	+1/2", -1/4"
	FOOTINGS* IN PLAN	---	---	+2", -1/2"
	FOOTING MISPLACEMENT OR ECCENTRICITY IN DIRECTION OF ERROR (THE LESSER OF)	---	---	2% OF WIDTH OR 2"
	FOOTING THICKNESS DECREASE	---	---	5%
	FOOTING THICKNESS INCREASE	---	---	NO LIMIT

	STEP RISE IN FLIGHT OF STAIRS	---	---	±1/8"
	STEP TREAD IN FLIGHT OF STAIRS	---	---	±1/4"
	CONSECUTIVE STEP RISE	---	---	±1/16"
	CONSECUTIVE STEP TREAD	---	---	±1/8"

* **Footing tolerances apply to concrete dimensions only, not to positioning of vertical reinforcing steel, dowels, or embedded items.**
** **Includes water and wastewater process structures.**

END OF SECTION

SECTION 03151

JOINTS IN CONCRETE STRUCTURES

PART 1 GENERAL

1.01 SECTION INCLUDES

A. Waterstops and similar joints in concrete structures intended to retain water or withstand hydrostatic pressure.

1.02 UNIT PRICES

A. No separate payment will be made for joints under this Section. Include payment in unit price for structural concrete.

B. Refer to Section 01270 - Measurement and Payment for unit price procedures.

1.03 REFERENCES

A. ASTM A 775 - Standard Specification for Epoxy-Coated Reinforcing Steel Bars.

B. ASTM C 920 - Specification for Elastomeric Joint Sealants.

C. ASTM D 412 - Test Methods for Rubber Properties in Tension.

D. ASTM D 624 - Test Method for Rubber Property - Tear Resistance.

E. ASTM D 638 - Test Method for Tensile Properties of Plastics.

F. ASTM D 746 - Test Method for Brittleness Temperature of Plastics and Elastomers by Impact.

G. ASTM D 747 - Test Method for Apparent Bending Modulus of Plastics by Means of a Cantilever Beam.

H. ASTM D 1056 - Specification for Flexible Cellular Materials - Sponge or Expanded Rubber.

I. ASTM D 1752 - Specification for Preformed Sponge Rubber and Cork Expansion Joint Fillers for Concrete Paving and Structural Construction.

J. ASTM D 2000 - Specification for Rubber Products in Automotive Applications.

K. ASTM D 2240 - Test Method for Rubber Property - Durometer Hardness.

L. ASTM D 2241 - Specification for PVC Tubing.

M. Federal Specification SS-S-210A - Sealing Compound, Preformed Plastic for Expansion Joints and Pipe Joints.

N. Federal Specification TT-S-0227E(3) Sealing Compound, Elastomeric Type, Multi-Component, for Caulking, Sealing, and Glazing Buildings and Other Structures.

O. U.S. Army Corps of Engineers Specification CRD-C 572 PVC Waterstop.

1.04 DEFINITIONS

A. The following definitions refer to concrete joints in water-retaining structures. Unless otherwise indicated, all such joints shall have a waterstop or sealant groove to prevent water penetration at the joint.

B. Construction Joint: The joint or surface between two concrete pours, produced by placing fresh concrete in contact with a hardened concrete surface.

1. A bond breaker may or may not be used, as indicated.

2. Reinforcing steel is continuous through the joint, unless otherwise indicated.

C. Contraction Joint: A joint similar to a construction joint, but intended to accommodate concrete shrinkage and similar movement.

1. A bond breaker is always used.

2. Reinforcing steel is held back 4-1/2 inches from the joint surface, and sleeved dowels are used so pours can move apart, unless otherwise indicated.

D. Expansion Joint: A joint similar to a construction or contraction joint, but intended to accommodate both expansion and contraction.

1. Compressible joint filler is placed against the hardened concrete, to form and separate the second pour so pours can move together or apart.

2. A centerbulb waterstop and joint sealant are used to fill the gap, unless otherwise indicated.

3. Reinforcing steel is held back, and sleeved dowels are used to allow and control movement, unless otherwise indicated.

E. Control Joint: A groove cut or formed in the face of a single pour, producing a weaker plane more likely to crack; used in an attempt to control locations of normal shrinkage cracks.

1. Joint sealant is used to fill the groove.

2. Reinforcing steel is continuous, since the pour is monolithic.

1.05 SUBMITTALS

A. Submit under provisions of Section 01330 – Submittal Procedures.

B. Product Data: Information sufficient to indicate compliance with Contract Documents, including manufacturer's descriptive literature and specifications.

C. Shop Drawings: Indicate type, size, and location of each joint in each structure, and installation details.

D. Samples: For extrusions, submit 6-inch lengths. For molded or fabricated items, submit whole items. Submit 6-inch beads for sealants and 6-inch square samples for coatings, on appropriate substrates.

E. Quality Control Submittals: Submit manufacturer's instructions and recommendations for storage, handling and installation including material safety data sheets, and, where specified, test reports certified by an independent testing laboratory or the manufacturer, and manufacturer's certification that products furnished comply with Contract Documents.

1.06 QUALITY ASSURANCE

A. Waterstop Inspection: Notify City Engineer to schedule inspection at least 24 hours prior to work involving waterstop installation or fabrication of waterstop field joints.

B. Defects include but are not limited to the following:

1. Offsets at joints greater at any point than 1/16 inch or 15 percent of material thickness, whichever is less.

2. Exterior cracks at joints due to incomplete bond, which are deeper at any point than 1/16 inch or 15 percent of material thickness, whichever is less.

3. At any point, any combination of offsets or exterior cracks resulting in a net reduction in the cross-sectional area of the waterstop greater than 1/16 inch or 15 percent of material thickness at any point, whichever is less.

4. Misalignment of joint resulting in misalignment of the waterstop in excess of 1/2 inch in 10 feet.

5. Porosity in the welded joint as evidenced by visual inspection.

6. Bubbles or inadequate bond which can be detected with a pen knife. If, while probing the joint with the point of a pen knife, the knife breaks through the outer portion of the weld into a bubble, the joint is defective.

C. Field Joint Samples: Prior to use of the waterstop material in the field, fabricate and submit for review a sample of a fabricated mitered cross and a tee constructed of each size or shape of material to be used. Fabricate samples so material and workmanship represent fittings to be furnished. Field samples of fabricated fittings (crosses, tees, etc.) will be selected at random by the City for testing by a laboratory at City's expense; they shall have a tensile strength across the joints equal to at least 600 psi when tested in accordance with ASTM D 638. Contractor shall pay cost of failed tests and retesting required by failures.

D. Construction Joint Sealant: Prepare adhesion and cohesion test specimens, as specified, at intervals of 5 working days while sealants are being installed.

E. Sealant material shall show no signs of adhesive or cohesive failure when tested in accordance with the following procedure in laboratory and field tests:

1. Prepare sealant specimen between 2 concrete blocks (1 inch by 2 inches by 3 inches); spacing between the blocks shall be 1 inch. Use coated spacers (2 inches by 1-1/2 inches by 1/2 inch) to ensure sealant cross-sections of 1/2 inch by 2 inches with a width of 1 inch.

2. Cast and cure sealant according to manufacturer's recommendations except that curing period shall be not less than 24 hours.

3. Following curing period, widen the gap between blocks to 1-1/2 inches. Use spacers to maintain this gap for 24 hours prior to inspection for failure.

F. Sealant Installer: A competent waterproofing specialty contractor, approved by sealant manufacturer, having a record of successful performance in similar installations. Before beginning work, sealant manufacturer's representative shall instruct installer's crew in proper method of application.

1.07 WARRANTY

A. Provide a written warranty covering entire sealant installation against faulty and incompatible materials and workmanship, and agreeing to repair or replace defective work at no additional cost to the City, for a period of 5 years.

A. Deliver, store and handle materials in accordance with manufacturer's printed instructions.

B. Store waterstops to permit free circulation of air around waterstop material.

PART 2 P R O D U C T S

2.01 EPA POTABLE CLASSIFICATION

A. All joint materials shall be materials that reach acceptability for use in potable water systems no later than 30 days after installation, as classified by the Environmental Protection Agency.

2.02 PVC WATERSTOPS

A. Extrude from virgin polyvinyl chloride elastomer. Use no reclaimed or scrap material. Submit waterstop manufacturer's current test reports and manufacturer's written certification that the material furnished meets or exceeds Corps of Engineers Specification CRD-C572 and other specified requirements.

B. Flat Strip and Center-Bulb Waterstops: As detailed, and as manufactured by: Kirkhill Rubber Co., Brea, California; Water Seals, Inc., Chicago, Illinois; Progress Unlimited, Inc., New York, New York; Greenstreak Plastic Products Co., St. Louis, Missouri; or equal acceptable to the City Engineer, provided that at no place shall waterstop thickness be less than 3/8 inch.

C. Multi-Rib Waterstops: As detailed, and as manufactured by Water Seals, Inc., Chicago, Illinois; Progress Unlimited, Inc., New York, New York; Greenstreak Plastic Products Co., St. Louis, Missouri; or equal acceptable to the City Engineer. Use prefabricated joint fittings at intersections of ribbed-type waterstops.

D. Other Waterstops: When types of waterstops not listed above are indicated on the Drawings, they are subject to these specifications.

E. Waterstop Properties: When tested in accordance with specified standards, waterstop material shall meet or exceed the following requirements:

Physical Property, Sheet Material	Value	ASTM Standard
Tensile Strength-min (psi):	1750	D638, Type IV
Ultimate Elongation-min (percent):	350	D638, Type IV
Low Temp Brittleness-max (degrees F):	-35	D746
Stiffness in Flexure-min (psi):	400	D747
Accelerated Extraction (CRD-C572) -		
Tensile Strength-min (psi):	1500	D638, Type IV
Ultimate Elongation-min (percent):	300	D638, Type IV
Effect of Alkalies (CRD-C572) -		
Change in Weight (percent):	+0.25/-0.10	------
Change in Durometer, Shore A:	+5	D2240
Finished Waterstop -		
Tensile Strength-min (psi):	1400	D638, Type IV
Ultimate Elongation-min (percent):	280	D638, Type IV

2.03 JOINT SEALANT

A. Material: Polyurethane polymer designed for bonding to concrete which is continuously submerged in water. Use no material with an unsatisfactory history of bond or durability when used in joints of liquid-retaining structures.

B. Sealant Properties at 73 degrees F, 50 percent relative humidity:

1. Work Life: 45 - 180 minutes

2.	Time to Reach 20 Shore A Hardness (at 77 degrees F, 200 gr quantity):	24 hours, maximum
3.	Ultimate Hardness (ASTM D 2240):	20 - 45 Shore A
4.	Tensile Strength (ASTM D 412):	200 psi, minimum
5.	Ultimate Elongation (ASTM D 412):	400 percent, minimum
6.	Tear Resistance (Die C ASTM D 624):	75 pounds per inch of thickness, minimum
7.	Color:	Light Gray

C. Polyurethane Sealants for Waterstop Joints in Concrete:

1. Sealant: 2-part polyurethane; when cured, sealant shall meet or exceed ANSI/ASTM C 920 or Federal Specification TT-S-0227 E(3) for 2-part material.

2. Vertical and overhead horizontal joints: Use only "non-sag" compounds meeting ANSI/ASTM C 920, Class 25, Grade NS, or Federal Specification TT-S-0227 E(3), Type II, Class A.

3. Plane horizontal joints: Self-leveling compounds meeting ANSI/ASTM C 920, Class 25, Grade P, or Federal Specification TT-S-0227 E(3), Type I. For joints subject to either pedestrian or vehicular traffic, use a compound providing non-tracking characteristics and having a Shore A hardness range of 35 to 45.

4. Primer: Use only compatible materials manufactured or recommended for the application by the sealant manufacturer, in accordance with the printed instructions and recommendations of the sealant manufacturer.

D. Acceptable Products: Polymeric Systems Inc. "PSI-270"; Pacific Polymers "Elastothane 227R"; Sika Corporation "Sikaflex 2C", or equal acceptable to the City Engineer.

E. Sealants for non-waterstop joints: Conform to Section 07920 - Sealants and Caulking.

2.04 MISCELLANEOUS MATERIALS

A. Bearing Pad: ASTM D 2000 neoprene, Grade 2 or 3, Type BC, tensile strength 1450 psi, 60 durometer hardness, unless otherwise indicated.

B. Neoprene Sponge: ASTM D 1056, Type 2C3-E1 closed-cell expanded neoprene.

C. Preformed Joint Filler: ASTM D 1752 Type I non-extruding type; neoprene sponge or polyurethane of firm texture, except as otherwise specified. Bituminous fiber type will not be permitted.

D. Control Joint Former: Continuous plastic insert strips with anchorage ribs located at the bottom and an enlarged upper portion that is readily removable without damage to the concrete, and is sized to form sealant groove. Size to extend to at least 1/4 slab depth.

E. Backing Rod: Extruded closed-cell polyethylene foam rod, compatible with joint sealant materials used, with a tensile strength not less than 40 psi, and compression deflection approximately 25 percent at 8 psi. Size: 1/8-inch larger in diameter than joint width, except use one-inch diameter rod for 3/4-inch wide joints.

F. Bond Breaker: "Super Bond Breaker" manufactured by Burke Company, San Mateo, California; "Select Cure CRB", manufactured by Select Products Co., Upland, California, or equal acceptable to the City Engineer. Bond breaker shall contain a fugitive dye so areas of application will be readily distinguishable.

G. Slip Dowels: Smooth epoxy-coated bars conforming to ASTM A 775.

H. PVC Tubing: ASTM D 2241, Schedule SDR 13.5.

2.05 RESILIENT WATERSTOP

A. Resilient waterstop, where called for on the Drawings, shall be either a bentonite or adhesive type material.

B. Bentonite Waterstop:

1. Material: 75 percent bentonite, mixed with butyl rubber-hydrocarbon containing less than 1.0 percent volatile matter, and free of asbestos fibers or asphaltics.

2. Manufacturer's rated temperature ranges: For application, 5 to 125 degrees F; in service, -40 to 212 degrees F.

3. Cross-sectional dimensions, unexpanded waterstop: One inch by 3/4 inch.

4. Provide with adhesive backing capable of producing excellent adhesion to concrete surfaces.

C. Adhesive Waterstop:

1. Adhesive waterstop shall be at least 2 inches in diameter and shall be Synko-Flex preformed plastic adhesive waterstop by Synko-Flex Products, Inc., or equal. The waterstop shall meet or exceed requirements of Federal Specification SS-S-210A.

2. The adhesive waterstop shall be supplied wrapped completely by a two part protective paper.

3. The adhesive waterstop material shall have independent laboratory tests verifying that the material seals joints in concrete against leakage when subjected to a minimum of 30 psi water pressure for at least 72 hours.
4. Primer, to be used on hardened concrete surfaces, shall be provided by the same manufacturer as the waterstop material.

PART 3 EXECUTION

3.01 INSTALLATION

A. Embed waterstops in concrete across joints as shown. Waterstops shall be continuous for the extent of the joint; make splices necessary to provide such continuity in accordance with manufacturer's instructions. Support and protect waterstops during construction operations; repair or replace waterstops damaged during construction.

B. Install waterstops in concrete on one side of joints, leaving other side exposed until the next pour. When a waterstop will remain exposed for 2 days or more, shade and protect the exposed waterstop from direct rays of the sun during the entire exposure and until the exposed portion of the waterstop is embedded in concrete.

3.02 SPLICES IN WATERSTOPS

A. Splice waterstops by heat-sealing adjacent waterstop sections in accordance with the manufacturer's printed instructions.

1. Do not damage material by heat sealing.
2. Splice tensile strength: At least 60 percent of unspliced material tensile strength.

3. Maintain continuity of waterstop ribs and tubular center axis.

B. Butt end-to-end joints of 2 identical waterstop sections may be made in the forms during placement of waterstop material.

C. Prior to placement in formwork, prefabricate all waterstop joints involving more than 2 ends to be joined together, an angle cut, an alignment change, or the joining of 2 dissimilar waterstop sections, allowing not less than 24-inch long strips of waterstop material beyond the joint. Upon inspection and approval by the City Engineer, install prefabricated waterstop joint assemblies in formwork, and butt-weld ends of the 24-inch strips to the straight-run portions of waterstop in the forms.

D. Where a centerbulb waterstop intersects and is joined to a non-centerbulb waterstop, take care to seal the end of the centerbulb, using additional PVC material if needed.

3.03 JOINT CONSTRUCTION

A. Setting Waterstops:

1. Correctly position waterstops during installation. Support and anchor waterstops during progress of the work to ensure proper embedment in concrete. Locate symmetrical halves of waterstops equally between concrete pours at joints, with center axis coincident with joint openings. Thoroughly work concrete in joint vicinity for maximum density and imperviousness.

2. Flat-strip waterstop: Prevent folding over by concrete during placement. Unless otherwise shown, hold waterstops in place with wire ties on 12-inch centers passed through the waterstop edge and tied to reinforcing steel.

   a. Horizontal waterstops (with flat face in vertical plane): Hold in place by fastening upper waterstop edge to continuous supports.

   b. Horizontal waterstops (with flat face in horizontal plane): Work concrete under waterstops by hand to eliminate air and rock pockets.

3. Place centerbulb waterstops in expansion joints centered on joint filler material.

4. Where a waterstop in a vertical wall joint does not connect with any other waterstop, and is not intended to be connected to a waterstop in a future concrete placement, terminate the waterstop 6 inches below the top of the wall.

B. Joint Location: Unless specifically noted otherwise, provide construction joints at 25-foot maximum spacing for concrete construction. Where joints are shown spaced greater than 40 feet apart, provide additional joints to maintain the 25-foot maximum spacing. Submit joint locations for review by the City Engineer.

C. Joint Preparation: Prepare surfaces in accordance with Section 03310 - Structural Concrete. Unless otherwise indicated, bonding is required at horizontal concrete joints in walls. Except on horizontal wall construction joints, wall-to-slab joints, or where otherwise shown or specified, at joints where waterstops are required, coat the joint face of the first pour with bond breaker as specified.

D. Replacement of Defective Field Joints: Replace waterstop field joints showing evidence of misalignment, offset, porosity, cracks, bubbles, inadequate bond or other defects with products and joints complying with Contract Documents.

E. Construction Joint Sealant:

1. In water-bearing floor slabs and elsewhere where indicated, provide construction joints with tapered grooves filled with construction joint sealant. Leave groove- forming material in place until time grooves are cleaned and filled with joint sealant. After removing groove forms, remove laitance and fins and sand-blast the grooves. Allow grooves to dry thoroughly, then blow out, immediately prime surfaces, place bond-breaker tape in bottom of groove and fill with construction joint sealant. Use no sealant without a primer. Completely fill sealant grooves. Thoroughly clean areas designated to receive sealant, as specified for tapered grooves, prior to sealant application.

2. Mix and install primer and sealant in accordance with manufacturer's printed instructions and recommendations. Do not coat sides of sealant groove with bond breaker, curing compound or other substance which would interfere with proper sealant bond. Allow at least 7 days for sealant to achieve final cure before filling structure with water.

3. Thoroughly and uniformly mix 2-part catalyst-cured material.

4. Remove and replace improperly cured sealants after the manufacturer's recommended curing time; thoroughly sandblast the groove to remove all traces of uncured or partially-cured sealant and primer, then re-prime and re-seal with specified sealant.

F. Resilient Waterstop:

1. Install resilient waterstop in accordance with manufacturer's instructions and recommendations except as otherwise indicated and specified.

2. When requested by the Project Manager, provide technical assistance by manufacturer's representative in the field at no additional cost to the City.

3. Use resilient waterstop only where complete confinement by concrete is provided; do not use in expansion or contraction joints.

4. Where resilient waterstop is used in combination with PVC waterstop, lap resilient waterstop over PVC waterstop a minimum of 6 inches and place in contact with the PVC waterstop. Where crossing PVC at right angles, melt PVC ribs to form a smooth joining surface.

5. At the free top of walls without connecting slabs, stop the resilient waterstop and grooves (where used) 6 inches from the top in vertical wall joints.

6. Bentonite Waterstop:

   a. Locate bentonite waterstop as near as possible to the center of the joint and extend continuous around the entire joint. Minimum distance from edge of waterstop to face of member: 5 inches.
   b. Where thickness of the concrete member to be placed on the bentonite waterstop is less than 12 inches, place waterstop in grooves at least 3/4 inch deep and 1-1/4 inches wide formed or ground into the concrete. Minimum distance from edge of waterstop placed in groove to face of member: 2.5 inches.

   c. Do not place bentonite waterstop when waterstop material temperature is below 40 degrees F. Waterstop material may be warmed so that it remains above 40 degrees F during placement but means used to warm it shall in no way harm the material or its properties. Do not install waterstop where air temperature falls outside manufacturer's recommended range.

   d. Place bentonite waterstop only on smooth and uniform surfaces; grind concrete smooth if necessary to produce satisfactory substrate, or bond waterstop to irregular surfaces using an epoxy grout which completely fills voids and irregularities beneath the waterstop material. Prior to installation, wire brush the concrete surface to remove laitance and other substances that may interfere with bonding of epoxy.

   e. In addition to the adhesive backing provided with the waterstop, secure bentonite waterstop in place with concrete nails and washers at 12-inch maximum spacing.

7. Adhesive Waterstop:

a. Thoroughly clean the concrete surface on which the waterstop is to be placed with a wire brush and coat with primer.

b. If the surface is too rough to allow the waterstop to form a complete contact, grind to form an adequately smooth surface.

c. Install the waterstop with the top protective paper left in place. Overlap joints between strips a minimum of 1 inch and cover back over with the protective paper.

d. Do not remove protective paper until just before final formwork completion. Concrete shall be placed immediately. The time that the waterstop material is uncovered prior to concrete placement shall be minimized and shall not exceed 24 hours.

G. Control Joints:

1. Where indicated, form in slabs by sawcutting, preformed plastic inserts or other means acceptable to City Engineer. Minimum insert or sawcut: 1/4 slab depth.

2. Perform sawcutting during the curing period as soon as possible after concrete has reached its final set, has attained sufficient strength to support sawcutting operations without damage, and while it remains fully saturated.

3. Leave the removable portion of plastic inserts in place and protect sawcuts against damage and intrusion of foreign material until the end of the curing period and until concrete has dried sufficiently to allow sealant installation.

4. Sealant Installation: Blow foreign material from formed or sawcut space. Insert a foam backer rod to form a sealant depth equal to the width of the space but not less than 3/8 inch. Install sealant as specified elsewhere in the Contract Documents.

END OF SECTION

SECTION 03211

REINFORCING STEEL

PART 1 GENERAL

1.01 SECTION INCLUDES

A. Structural concrete reinforcement and grouting of reinforcement dowel bars into hardened concrete.

1.02 UNIT PRICES

A. No separate payment will be made for reinforcing steel or grouting that is part of the Work as bid. Include payment in unit price for structural concrete.

B. Measurement for reinforcing steel installed as extra work is on a per-pound basis.

C. Refer to Section 01270 - Measurement and Payment for unit price procedures.

1.03 REFERENCES

A. ACI 315 - Details and Detailing of Concrete Reinforcement.

B. ACI 318 - Building Code Requirements for Reinforced Concrete.

C. ASTM A 36 - Standard Specification for Structural Steel.

D. ASTM A 82 - Standard Specification for Steel Wire, Plain, for Concrete Reinforcement.

E. ASTM A 185 - Standard Specification for Steel Welded Wire Fabric, Plain, for Concrete Reinforcement.

F. ASTM A 497 - Standard Specification for Steel Welded Wire Fabric, Deformed, for Concrete Reinforcement.

G. ASTM A 615 - Standard Specification for Deformed and Plain Billet-Steel Bars for Concrete Reinforcement.

H. ASTM A 675 - Standard Specification for Steel Bars, Carbon, Hot-Wrought, Special Quality, Mechanical Properties.

I. ASTM A 775/A 775M - Standard Specification for Epoxy-Coated Reinforcing Steel Bars.

J. ASTM C 881 - Specification for Epoxy-Resin-Base Bonding Systems for Concrete.

K. AWS D 1.4 - Structural Welding Code - Reinforcing Steel.

L. WRI - Manual of Standard Practice for Welded Wire Fabric.

M. CRSI MSP-1 - Manual of Standard Practice.

1.04 SUBMITTALS

A. Conform to Section 01330 – Submittal Procedures.

B. Shop Drawings:

1. Submit shop drawings detailing reinforcement fabrication, bar placement location, splices, spacing, bar designation, bar type, length, size, bending, number of bars, bar support type and other pertinent information, including dimensions. Provide sufficient detail for placement of reinforcement without use of Contract Drawings. Information shall correspond directly to data listed on bill of materials.

2. Use of reproductions of Contract Drawings by Contractor, Subcontractor, erector, fabricator or material supplier in preparation of shop drawings (or in lieu of preparation of shop drawings) signifies acceptance by that party of information shown thereon as correct, and acceptance of obligation to pay for any job expense, real or implied, arising due to errors that may occur thereon. Remove references to Design Engineer, including seals, when reproductions of Contract Drawings are used as shop drawings.

3. Detail shop drawings in accordance with ACI 315, Figure 6.

4. Submit shop drawings showing location of proposed additional construction joints as required under Section 03301 - Joints in Concrete Structures, and obtain approval of City Engineer, prior to submitting reinforcing steel shop drawings.

C. Bill of Materials: Submit with shop drawings.

D. Product Data:

1. Mechanical Bar Splices: Submit manufacturer's technical literature, including specifications and installation instructions.

2. Epoxy grout proposed for anchoring reinforcing dowels to hardened concrete: Submit manufacturer's technical literature including recommended installation procedures.

E. Certificates:

1. Submit steel manufacturer's certificates of mill tests giving properties of steel proposed for use. List manufacturer's test number, heat number, chemical analysis, yield point, tensile strength and percentage of elongation. Identify proposed location of steel in work.

2. Foreign-manufactured reinforcing bars shall be tested for conformance to ASTM requirements by a certified independent testing laboratory located in United States. Certification from any other source is not acceptable. Submit test reports for review. Do not begin fabrication of reinforcement until material has been approved.

1.05 HANDLING AND STORAGE

A. Store steel reinforcement above ground on platforms, skids or other supports. Protect reinforcing from mechanical injury, surface deterioration and formation of excessive, loose or flaky rust caused by exposure to weather. Protect epoxy-coated reinforcing from formation of any amount of rust.

1.06 QUALITY ASSURANCE

A. Notify City Engineer at least 48 hours before concrete placement so that reinforcement may be inspected, and errors corrected, without delaying Work.

PART 2 PRODUCTS

2.01 MATERIAL

A. Reinforcing Bars: Deformed bars conforming to ASTM A 615, grade as indicated on Drawings, except column spirals and those shown on Drawings to be smooth bars. Where grade is not shown on Drawings, use Grade 60.

B. Smooth Bars: Where indicated on Drawings, use smooth bars conforming to

ASTM A 36; ASTM A 615, Grade 60; or ASTM A 675, Grade 70.

C. Column Spirals: Bars conforming to ASTM A 615, Grade 60, or wire conforming to ASTM A 82.

D. Epoxy-Coated Deformed Bars, Column Spirals and Smooth Bars: Conform to ASTM A 775/A 775M.

E. Welded Wire Fabric:

1. Welded Smooth Wire Fabric: Conform to ASTM A 185.

2. Welded Deformed Wire Fabric: Conform to ASTM A 497.

3. Provide wire size, type and spacing as shown. Where type is not shown on Drawings, use welded smooth wire fabric.

4. Furnish welded wire fabric in flat sheets only.

F. Tie Wire: 16-1/2 gage or heavier annealed steel wire. Use plastic-coated tie wire with epoxy-coated reinforcing steel.

G. Bar Supports: Provide chairs, riser bars, ties and other accessories made of plastic or metal, except as otherwise specified. Use bar supports and accessories of sizes required to provide required concrete cover. Where concrete surfaces are exposed to weather, water or wastewater, provide plastic accessories only; do not use galvanized or plastic-tipped metal in such locations. Provide metal bar supports and accessories rated Class 1 or 2 conforming to CRSI MSP-1 Manual of Standard Practice. Use epoxy-coated bar supports with epoxy-coated reinforcing bars.

H. Slabs on Grade: Provide chairs with sheet metal bases or provide precast concrete bar supports 3 inches wide, 6 inches long, and thick enough to allow required cover. Embed tie wires in 3-inch by 6-inch side.

I. Mechanical Bar Splices:

1. Conform to ACI 318; use where indicated on Drawings.

a. Compression splices shall develop ultimate stress of reinforcing bar.

b. Tension splices shall develop 125 percent of minimum yield point stress of reinforcing bar.

2. Regardless of chemical composition of steel, any heat effect shall not adversely affect performance of reinforcing bar.

J. Welded Splices:

1. Provide welded splices where shown and where approved by the City Engineer. Welded splices of reinforcing steel shall develop a tensile strength exceeding 125 percent of the yield strength of the reinforcing bars connected.

2. Provide materials for welded splices conforming to AWS D1.4.

K. Epoxy Grout: High-strength rigid epoxy adhesive, conforming to ASTM C 881, Type IV, manufactured for purpose of anchoring dowels into hardened concrete and the moisture condition, application temperature and orientation of the hole to be filled. Unless otherwise shown, depth of embedment shall be as required to develop the full tensile strength (125 percent of yield strength) of dowel, but not less than 12 diameters.

2.02 FABRICATION

A. Bending: Fabricate bars to shapes indicated on Drawings by cold bending. Bends shall conform to minimum bend diameters specified in ACI 318. Do not straighten or rebend bars. Fabricate epoxy-coated reinforcing steel to required shapes in a manner that will not damage epoxy coating. Repair any damaged epoxy coating with patching material conforming to Item 4.4 of ASTM A 775/A 775M.

B. Splices:

1. Locate splices as indicated on Drawings. Do not locate splices at other locations without approval of City Engineer. Use minimum number of splices located at points of minimum stress. Stagger splices in adjacent bars.

2. Length of lap splices: As shown on Drawings.

3. Prepare ends of bars at mechanical splices in accordance with splice manufacturer's requirements.

C. Construction Joints: Unless otherwise shown, continue reinforcing through construction joints.

D. Bar Fabrication Tolerances: Conform to tolerances listed in ACI 315, Figures 4 and 5.

E. Standard Hooks: Conform to the requirements of ACI 318.

F. Marking: Clearly mark bars with waterproof tags showing number of bars, size, mark, length and yield strength. Mark steel with same designation as member in which it occurs.

PART 3 EXECUTION

3.01 PREPARATION

A. Clean reinforcement of scale, loose or flaky rust and other foreign material, including oil, mud or coating that will reduce bond to concrete.

3.02 INSTALLATION

A. Placement Tolerances: Place reinforcement within tolerances of Table 03210A at the end of this Section. Bend tie wire away from forms to maintain the specified concrete coverage.

B. Interferences: Maintain 2-inch clearance from embedded items. Where reinforcing interferes with location of other reinforcing steel, conduit or embedded items, bars may be moved within specified tolerances or one bar diameter, whichever is greater. Where greater movement of bars is required to avoid interference, notify City Engineer. Do not cut reinforcement to install inserts, conduit, mechanical openings or other items without approval of City Engineer.

C. Concrete Cover: Provide clear cover measured from reinforcement to face of concrete as listed in Table 03211B at the end of this Section, unless otherwise indicated on Drawings.

D. Placement in Forms: Use spacers, chairs, wire ties and other accessory items necessary to assemble, space and support reinforcing properly. Provide accessories of sufficient number, size and strength to prevent deflection or displacement of reinforcement due to construction loads or concrete placement. Use appropriate accessories to position and support bolts, anchors and other embedded items. Tie reinforcing bars at each intersection, and to accessories. Blocking reinforcement with concrete or masonry is prohibited.

E. Placement for Concrete on Ground: Support bar and wire reinforcement on chairs with sheet metal bases or precast concrete blocks spaced at approximately 3 feet on centers each way. Use minimum of one support for each 9 square feet. Tie supports to reinforcing bars and wires.

F. Vertical Reinforcement in Columns: Offset vertical bars by at least one bar diameter at splices. Provide accurate templates for column dowels to ensure proper placement.

G. Splices:

1. Do not splice bars, except at locations indicated on Drawings or reviewed shop drawings, without approval of City Engineer.

2. Lap Splices: Unless otherwise shown or noted, Class B, conforming to ACI 318-89, Section 12.15.1. Tie securely with wire prior to concrete placement, to prevent displacement of splices during concrete placement.

3. Mechanical Bar Splices: Use only where indicated on Drawings or approved by the City Engineer. Install in accordance with manufacturer's instructions.

   a. Couplers located at a joint face shall be of a type which can be set either flush or recessed from the face as shown. Seal couplers prior to concrete placement to completely eliminate concrete or cement paste from entering.

   b. Couplers intended for future connections: Recess 1/2 inch minimum from concrete surface. After concrete is placed, plug coupler and fill recess with sealant to prevent contact with water or other corrosive materials.

   c. Unless noted otherwise, match mechanical coupler spacing and capacity to that shown for the adjacent reinforcing.

H. Construction Joints: Place reinforcing continuous through construction joints, unless noted otherwise.

I. Welded Wire Fabric: Install wire fabric in as long lengths as practicable. Unless otherwise indicated on Drawings, lap adjoining pieces at least 6 inches or one full mesh plus 2 inches, whichever is larger. Lace splices with wire. Do not make end laps midway between supporting beams, or directly over beams of continuous structures. Offset end laps in adjacent widths to prevent continuous laps. Conform to WRI - Manual of Standard Practice for Welded Wire Fabric.

J. Field Bending: Shape reinforcing bent during construction operations to conform to Drawings. Bars shall be cold-bent; do not heat bars. Closely inspect reinforcing for breaks. When reinforcing is damaged, replace, Cadweld, or otherwise repair, as directed by City Engineer. Do not bend reinforcement after it is embedded in concrete.

K. Epoxy-coated Reinforcing Steel: Install in accordance with Paragraph 3.02J, Field Bending, and in a manner that will not damage epoxy coating. Repair damaged epoxy coating with patching material as specified in Paragraph 2.02A, Bending.

L. Field Cutting: Cut reinforcing bars by shearing or sawing. Do not cut bars with cutting torch.

M. Welding of reinforcing bars is prohibited, except where shown on Drawings.

3.03 GROUTING OF REINFORCING AND DOWEL BARS

A. Use epoxy grout for anchoring reinforcing and dowel steel to existing concrete in accordance with epoxy manufacturer's instructions. Drill hole not more than 1/4 inch larger than steel bar diameter (including height of deformations for deformed bars) in existing concrete. Just before installation of steel, blow hole clean of all debris using compressed air. Partially fill hole with epoxy, using enough epoxy so when steel bar is inserted, epoxy grout will completely fill hole around bar. Dip end of steel bar in epoxy and twist bar while inserting into partially-filled hole.

Table 03211A
REINFORCEMENT PLACEMENT TOLERANCES

PLACEMENT	TOLERANCE IN INCHES
Clear Distance -	
To formed soffit:	-1/4
To other formed surfaces:	±1/4
Minimum spacing between bars:	-1/4
Clear distance from unformed surface to top reinforcement -	
Members 8 inches deep or less:	±1/4
Members more than 8 inches deep but less than 24 inches deep:	-1/4, +1/2
Members 24 inches deep or greater:	-1/4, +1
Uniform spacing of bars (but the required number of bars shall not be reduced):	±2
Uniform spacing of stirrups and ties (but the required number of stirrups and ties shall not be reduced):	±1
Longitudinal locations of bends and ends of reinforcement -	
General:	±2
Discontinuous ends of members:	±1/2
Length of bar laps:	-1-1/2
Embedded length -	
For bar sizes No. 3 through 11:	-1
For bar sizes No. 14 and 18:	-2

Table 03211B
MINIMUM CONCRETE COVER FOR REINFORCEMENT

SURFACE	MINIMUM COVER IN INCHES
Slabs and Joists -	
Top and bottom bars for dry conditions -	
No. 14 and No. 18 bars:	1-1/2
No. 11 bars and smaller:	1
Formed concrete surfaces exposed to earth, water or weather; over, or in contact with, sewage; and for bottoms bearing on work mat, or slabs supporting earth cover -	
No. 5 bars and smaller:	1-1/2
No. 6 through No. 18 bars:	2
Beams and Columns -	
For dry conditions -	
Stirrups, spirals and ties:	1-1/2
Principal reinforcement:	2
Exposed to earth, water, sewage or weather -	
Stirrups and ties:	2
Principal reinforcement:	2-1/2
Walls -	
For dry conditions -	
No. 11 bars and smaller:	1
No. 14 and No. 18 bars:	1-1/2
Formed concrete surfaces exposed to earth, water, sewage or weather, or in contact with ground -	
Circular tanks with ring tension:	2
All others:	2
Footings and Base Slabs -	
At formed surfaces and bottoms bearing on concrete work mat:	2
At unformed surfaces and bottoms in contact with earth:	3
Over top of piles:	2
Top of footings -- same as slabs	

END OF SECTION

SECTION 03310

STRUCTURAL CONCRETE

PART 1 GENERAL

1.01 SECTION INCLUDES

A. Cast-in-place normal-weight structural concrete and mass concrete.

1.02 UNIT PRICES

A. Measurement for structural concrete is on lump-sum basis for each structure as bid. Payment includes related work performed on these structures in accordance with related sections of these Specifications.

B. Measurement for extra structural concrete is on cubic-yard basis. Payment includes related work performed in accordance with related sections.

C. Refer to Section 01270 - Measurement and Payment for unit price procedures.

1.03 REFERENCES

A. ACI 301 - Specifications for Structural Concrete for Buildings.

B. ACI 304.2R - Placing Concrete by Pumping Methods

C. ACI 305R - Hot Weather Concreting.

D. ACI 306.1 - Standard Specification for Cold Weather Concreting.

E. ACI 309R - Guide for Consolidation of Concrete.

F. ACI 318 - Building Code Requirements for Reinforced Concrete.

G. ACI 350R - Environmental Engineering Concrete Structures.

H. ASTM C 31 - Standard Practice for Making and Curing Concrete Test Specimens in the Field.

I. ASTM C 33 - Standard Specification for Concrete Aggregates.

J. ASTM C 39 - Standard Test Method for Compressive Strength of Cylindrical Concrete Specimens.

K. ASTM C 42 - Standard Method of Obtaining and Testing Drilled Cores and Sawed Beams of Concrete.

L. ASTM C 88 - Standard Test Method for Soundness of Aggregates by Use of Sodium Sulfate or Magnesium Sulfate.

M. ASTM C 94 - Standard Specifications for Ready-Mixed Concrete.

N. ASTM C 127 - Standard Test Method for Specific Gravity and Absorption of Coarse Aggregate.

O. ASTM C 131 - Standard Test Method for Resistance to Degradation of Small-Size Coarse Aggregate by Abrasion and Impact in the Los Angeles Machine.

P. ASTM C 136 - Sieve Analyses of Fine and Coarse Aggregates.

Q. ASTM C 143 - Standard Test Method for Slump of Hydraulic Cement Concrete.

R. ASTM C 150 - Standard Specification for Portland Cement.

S. ASTM C 157 - Test Method for Length Change of Hardened Hydraulic Cement Mortar and Concrete.

T. ASTM C 172 - Standard Practice for Sampling Freshly Mixed Concrete.

U. ASTM C 173 - Standard Test Method for Air Content of Freshly Mixed Concrete by the Volumetric Method.

V. ASTM C 192 - Method of Making and Curing Concrete Test Specimens in the Laboratory.

W. ASTM C 231 - Standard Test Method for Air Content of Freshly Mixed Concrete by the Pressure Method.

X. ASTM C 260 - Standard Specification for Air-Entraining Admixtures for Concrete.

Y. ASTM C 330 - Standard Specification for Lightweight Aggregates for Structural Concrete.

Z. ASTM C 494 - Standard Specification for Chemical Admixtures for Concrete.

AA. ASTM C 535 - Standard Test Method for Resistance to Degradation of Large-Size Coarse Aggregate by Abrasion and Impact in the Los Angeles Machine.

AB. ASTM C 567 - Standard Test Method for Unit Weight of Structural Lightweight Concrete.

AC. ASTM C 1064 - Standard Test Method for Temperature of Freshly Mixed Portland Cement Concrete.

AD. Concrete Plant Manufacturer's Bureau (CPMB), Plant Mixer Manufacturers Division: Concrete Plant Mixer Standards.

AE. National Ready-Mixed Concrete Association (NRMCA): Certification of Ready-Mixed Concrete Production Facilities (checklist with instructions).

AF. John Wiley and Sons, Interscience Publishers Division, "Encyclopedia of Industrial Chemical Analysis," Vol. 15, Page 230 (alkalinity test procedure).

1.04 DEFINITIONS

A. Mass Concrete: Concrete sections 4 feet or more in least dimension.

B. Hot Weather: Any combination of high air temperature, low relative humidity and wind velocity tending to impair quality of fresh or hardened concrete or otherwise resulting in abnormal properties.

C. Cold Weather: Period when, for more than 2 successive days, mean daily temperature is below 40 degrees F.

1.05 SUBMITTALS

A. Conform to Section 01330 – Submittal Procedures.

B. Mill Certificates: Required for bulk cement.

C. Design Mixes:

1. Submit test data on proposed design mixes for each type of concrete in the Work, including each class, and variations in type, source or quantity of material. Include type, brand and amount of cementitious materials; type, brand and amount of each admixture; slump; air content; aggregate sources, gradations, specific gravity and absorption; total water (including moisture in aggregate); water/cement ratio; compressive strength test results for 7 and 28 days; and shrinkage tests for Class C and D concrete at 21 or 28 days of drying.

2. Submit abrasion loss and soundness test results for limestone aggregate.

3. Testing of aggregates, including sieve analysis, shall be performed by a certified independent testing laboratory. Tests shall have been performed no earlier than 3 months before Notice to Proceed.

4. Provide standard deviation data for plant producing concrete. Data shall include copies of laboratory test results and standard deviation calculated in accordance with ACI 318, Item 5.3.1. Laboratory tests shall have been performed within past 12 months. When standard deviation data is not available, comply with ACI 318, Table 5.3.2.2.

5. Review and acceptance of mix design does not relieve Contractor of responsibility to provide concrete of quality and strength required by these Specifications.

D. Admixtures: Submit manufacturer's technical information, including following:

1. Air-Entraining Admixture: Give requirements to control air content under all conditions, including temperature variations and presence of other admixtures.

2. Chemical Admixtures: Give requirements for quantities and types to be used under various temperatures and job conditions to produce uniform, workable concrete mix. Submit evidence of compatibility with other admixtures and cementitious materials proposed for use in design mix.

E. High-range Water Reducer (Superplasticizer): When proposed for use, submit manufacturer's technical information and instructions for use of superplasticizer. State whether superplasticizer will be added at ready-mix plant or job site. When superplasticizer will be added at job site, submit proposed plan for measuring and adding superplasticizer to concrete mix at job site, and establish dosing area on site with holding tanks and metering devices. When superplasticizer is to be added at ready-mix plant, submit contingency plans for adding additional superplasticizer at job

site when required due to delay in placing concrete. Identify portions of Work on which superplasticizer is proposed for use.

F. Hot and Cold Weather Concreting: Submit, when applicable, proposed plans for hot and cold weather concreting. Review and acceptance of proposed procedure will not relieve Contractor of responsibility for quality of finished product.

G. Project Record Drawings: Accurately record actual locations of embedded utilities and components which are concealed from view.

1.06 QUALITY ASSURANCE

A. Provide necessary controls during evaluation of materials, mix designs, production and delivery of concrete, placement and compaction to assure that the Work will be accomplished in accordance with Contract Documents. Maintain records of concrete placement. Record dates, locations, quantities, air temperatures, and test samples taken.

B. Code Requirements: Concrete construction for buildings shall conform to ACI 318. Concrete construction for water and wastewater treatment and conveying structures shall conform to ACI 318 with modifications by ACI 350R, Item 2.6. Where this Specification conflicts with ACI 318 or ACI 350R, this Specification governs.

C. Testing and Other Quality Control Services:

1. Concrete testing required in this section, except concrete mix design, limestone aggregate test data, and testing of deficient concrete, will be performed by an independent commercial testing laboratory employed and paid by the City in accordance with Section 01454 - Testing Laboratory Services.

2. Provide material for and cooperate fully with City's testing laboratory technician in obtaining samples for required tests.

3. Standard Services: The following testing and quality control services will be provided by City in accordance with Section 01454, Testing Laboratory Services:

a. Verification that plant equipment and facilities conform to NRMCA "Certification of Ready-Mix Concrete Production Facilities".

b. Testing of proposed materials for compliance with this Specification.

c. Review of proposed mix design submitted by Contractor.

d. Obtaining production samples of materials at plants or stockpiles during work progress and testing for compliance with this Specification.

e. Strength testing of concrete according to following procedures:

(1) Obtaining samples for field test cylinders from every 100 cubic yards and any portion less than 100 cubic yards for each mix design placed each day, according to ASTM C 172, with each sample obtained from a different batch of concrete on a representative, random basis. Selecting test batches by any means other than random numbers chosen before concrete placement begins is not allowed.

(2) Molding four specimens from each sample according to ASTM C 31, and curing under standard moisture and temperature conditions as specified in Sections 7(a) and (b) of ASTM C 31.

(3) Testing two specimens at 7 days and two specimens at 28 days according to ASTM C 39, reporting test results averaging strengths of two specimens. However, when one specimen evidences improper sampling, molding or testing, it will be discarded and remaining cylinder considered test result. When high-early-strength concrete is used, specimens will be tested at 3 and 7 days.

f. Air content: For each strength test, determination of air content of normal weight concrete according to ASTM C 231.

g. Slump: For each strength test, and whenever consistency of concrete appears to vary, conducting slump test in accordance with ASTM C 143.

h. Temperature: For each strength test, checking concrete temperature in accordance with ASTM C 1064.

i. Lightweight concrete: For each strength test, or more frequently when requested by Project Manager, determination of air content by ASTM C 567 and unit weight by ASTM C 567.

j. Monitoring of current and forecasted climatic conditions to determine when rate of evaporation, as determined by Figure 2.1.5 of ACI 305R,

will produce loss of 0.2 pounds of water, or more, per square foot per hour. Testing lab representative will advise Contractor to use hot weather precautions when such conditions will exist during concrete placement, and note on concrete test reports when Contractor has been advised that hot weather conditions will exist.

k. Class A and D Concrete Shrinkage Tests: Performance of drying shrinkage tests for trial batches as follows:

(1) Preparation and Testing of Specimens: Compression and drying shrinkage test specimens will be taken in each case from the same concrete sample; shrinkage tests will be considered a part of the normal compression tests for the project. 4-inch by 4-inch by 11-inch prisms with an effective gage length of 10 inches, fabricated, cured, dried and measured in accordance with ASTM C 157, modified as follows:

(a) Wet curing: Remove specimens from molds at an age of 23 hours ±1 hour after trial batching and immediately immerse in water at 70 degrees F ±3 degrees F for at least 30 minutes;

(b) Measure within 30 minutes after first 30 minutes of immersion to determine original length (not to be confused with "base length");

(c) Then submerge in saturated limewater, at 73 degrees F ±3 degrees F, for 7 days;

(d) Then measure at age 7 days to establish "base length" for drying shrinkage calculations ("zero" days drying age);

(e) Calculate expansion (base length expressed as a percentage of original length);

(f) Immediately store specimens in a temperature- and humidity-controlled room maintained at 73 degrees F, ±3 degrees F and 50 percent ±4 percent relative humidity, for the remainder of the test.

(g) Measure to determine shrinkage, expressed as percentage of base length. Compute the drying

shrinkage deformation of each specimen as the difference between the base length (at "zero" days drying age) and the length after drying at each test age. Compute the average drying shrinkage deformation of the specimens to the nearest 0.0001 inch at each test age. If the drying shrinkage of any specimen departs from the average of that test age by more than 0.0004 inch, disregard the results obtained from that specimen. Report results of shrinkage tests to the nearest 0.001 percent of shrinkage.

(h) Report shrinkage separately for 7, 14, 21, and 28 days of drying after 7 days of moist curing.

4. Additional Testing and Quality Control Services: The following will be performed by an independent commercial testing laboratory employed and paid by the City in accordance with Section 01454, Testing Laboratory Services, when requested by City Engineer.

   a. Checking of batching and mixing operations.

   b. Review of manufacturer's report of each cement shipment and conducting laboratory tests of cement.

   c. Molding and testing reserve 7-day cylinders or field cylinders.

   d. Conducting additional field tests for slump, concrete temperature and ambient temperature.

   e. Alkalinity Tests: For concrete used in sanitary structures, one test for each structure. Perform alkalinity tests on concrete covering reinforcing steel on the inside of the pipe or structure in accordance with "Encyclopedia of Industrial Chemical Analysis," Vol. 15, page 230.

5. Contractor shall provide the following testing and quality control services:

   a. Employ an independent commercial testing laboratory, acceptable to City, to prepare and test design mix for each class of concrete for which material source has been changed.

b. Notify commercial testing laboratory employed by City 24 hours prior to placing concrete.

6. Testing of deficient concrete in place:

a. When averages of three consecutive strength test results fail to equal or exceed specified strength, or when any individual strength test result falls below specified strength by more than 500 psi, strength of concrete shall be considered potentially deficient and core testing, structural analysis or load testing may be required by Project Manager.

b. When concrete in place proves to be deficient, Contractor shall pay costs, including costs due to delays, incurred in providing additional testing and analysis services provided by the City Engineer, or the independent commercial testing laboratory selected by the City.

c. Replace concrete work judged inadequate by core tests, structural analysis or load tests at no additional cost to the City.

d. Core Tests:

(1) Obtain and test cores in accordance with ASTM C 42. Where concrete in structure will be dry under service conditions, air dry cores (temperature 60 to 80 degrees F, relative humidity less than 60 percent) for 7 days before test; test dry. Where concrete in structure will be more than superficially wet under service conditions, test cores after moisture conditioning in accordance with ASTM C 42.

(2) Take at least three representative cores from each member or area of concrete in place that is considered potentially deficient. Location of cores shall be determined by Project Manager so as to least impair strength of structure. When, before testing, one or more cores shows evidence of having been damaged during or after removal from structure, replace the damaged cores.

(3) Concrete in area represented by core test will be considered adequate when average strength of cores is equal to at least 85 percent of specified strength, and when no single core is less than 75 percent of specified strength.

(4) Patch core holes in accordance with Section 03350 - Concrete Finishing.

e. Structural Analysis: When core tests are inconclusive or impractical to obtain, Project Manager may perform additional structural analysis at Contractor's expense to confirm safety of structure.

f. Load Tests: When core tests and structural analysis do not confirm safety of structure, load tests may be required, and their results evaluated, in accordance with ACI 318.

g. Testing by impact hammer, sonoscope, probe penetration tests (Windsor probe), or other nondestructive device may be permitted by Project Manager to determine relative strengths at various locations in structure, to evaluate concrete strength in place, or for selecting areas to be cored. However, such tests, unless properly calibrated and correlated with other test data, shall not be used as basis for acceptance or rejection of structure's safety.

1.07 STORAGE AND HANDLING OF MATERIALS

A. Cement: Store cement in weathertight buildings, bins or silos to provide protection from dampness and contamination and to minimize warehouse set. When there is any doubt as to expansive potential of shrinkage-compensating cements because of method or length of storage and exposure, laboratory test cement before use.

B. Aggregate: Arrange and use aggregate stockpiles to avoid excessive segregation or contamination with other materials or with other sizes of like aggregates. Build stockpiles in successive horizontal layers not exceeding 3 feet in thickness. Complete each layer before next is started.

C. Fine Aggregate: Before using, allow fine aggregate to drain until uniform moisture content is reached.

D. Admixtures: Store admixtures to avoid contamination, evaporation or damage. For those used in form of suspensions or nonstable solutions, provide suitable agitating equipment to assure uniform distribution of ingredients. Protect liquid admixtures from freezing and other temperature changes which would adversely affect their characteristics.

E. Lightweight Aggregates: Uniformly predampen lightweight aggregates as necessary to prevent excessive variations in moisture content. Allow predampened aggregates to remain in stockpiles, under continuous fog spray,

for minimum of 24 hours before use. Provide adequate drainage in stockpile areas to eliminate excess water and accumulation of contaminated fines.

PART 2 PRODUCTS

2.01 MATERIALS

A. Cement:

1. Use same brand of cement used in concrete mix design. Use only one brand of each type in each structure, unless otherwise indicated on Drawings.

2. Portland Cement: ASTM C 150, Type I or Type II, gray in color. Use Type III only when specifically authorized by City Engineer in writing. Use Type II, including the requirements of Table 2, in construction of liquid-containing structures and cooling towers, unless shown otherwise on Drawings.

B. Admixtures:

1. Do not use calcium chloride, thiocyanate or admixtures containing more than 0.05 percent chloride ions.

2. Air-Entraining Admixtures: ASTM C 260, compatible with other admixtures used.

3. Chemical Admixtures: Polymer type, nonstaining, chloride-free admixtures conforming to ASTM C 494, Type A, C, D or E.

4. High-Range Water Reducer (Superplasticizer): ASTM C 494, Type F or G, compatible with and by the same manufacturer as other admixtures.

C. Mixing Water: Use clean, potable water, free from harmful amounts of oils, acids, alkalis or other deleterious substances, meeting requirements of ASTM C 94.

D. Aggregates: Use coarse aggregate from only one source, and fine aggregate from only one source, for exposed concrete in any single structure.

1. Coarse Aggregate: Gravel, crushed gravel or crushed limestone conforming to ASTM C 33.

2. Fine Aggregate: Natural sand complying with ASTM C 33.

3. Limestone aggregate shall conform to ASTM C 33 and the following additional requirements: Clean, hard, strong and durable particles free of chemicals and coatings of silt, clay, or other fine materials that may affect hydration and bond of cement paste. Select crushed limestone: High-calcium limestone (minimum 95 percent $CaCO_3$ and maximum 3.5 percent $MgCO_3$) with maximum Los Angeles Abrasion loss of 38 percent, when tested in accordance with ASTM C 131 or ASTM C 535. Test aggregate for soundness in accordance with ASTM C 88; maximum loss shall not exceed 18 percent after 5 cycles of magnesium sulfate test.

4. Maximum size of coarse aggregate:

   a. Normal weight concrete, except as noted below: 1-1/2 inches.

   b. Formed members 6 inches or less in least dimension: 1/5 least dimension.

   c. Slabs: 1/3 depth of slab.

   d. Drilled shafts: 1/3 clearance between reinforcing steel, but not greater than 3/4 inch.

   e. Concrete fill, seal slabs and bonded concrete topping in clarifiers: 3/8 inch.

5. Coarse aggregate for lightweight concrete: ASTM C 330. Grading limits: 3/4 inch to No. 4.

6. Abrasive Aggregate: Conform to requirements of Section 03350 - Concrete Finishing.

E. Calcium Chloride: Not permitted.

F. Evaporation Retardant: Masterbuilders "Confilm", Euclid "Eucobar", or equal.

G. Miscellaneous Materials:

1. Bonding Agent: Two-component modified epoxy resin.

2. Vapor barrier: 10 mil clear polyethylene film of type recommended for below-grade aplication.

3. Non-shrink grout: premixed compound consisting of non-metallic aggregate, cement and water-reducing and plasticizing

   agents; capable of developing minimum compressive strength of 2,400 psi in 48 hours and 7,000 psi in 28 days.

2.02 CONCRETE MIX

A. Objective: Select proportions of ingredients to produce concrete having proper placability, durability, strength, appearance, and other specified properties.

B. Mix Design: Employ and pay an independent commercial testing laboratory, acceptable to City, to prepare and test mix designs for each type of concrete specified. Proportion mix design ingredients by weight. Submit mix designs and test results for approval.

1. During the trial batches, aggregate proportions may be adjusted by the testing laboratory using two coarse aggregate size ranges to obtain the required properties. If one size range produces an acceptable mix, a second size range need not be used. Such adjustments shall be considered refinements to the mix design and shall not be the basis for extra compensation to the Contractor. Concrete shall conform to the requirements of this Section, whether the aggregate proportions are from the Contractor's preliminary mix design, or whether the proportions have been adjusted during the trial batch process. Prepare trial batches using the aggregates, cement and admixtures proposed for the project. Make trial batches large enough to obtain 3 drying shrinkage test specimens and 6 compression test specimens from each batch. Shrinkage testing is required only for Class A and D concrete.

2. Determine compressive strength by testing 6-inch diameter by 12-inch high cylinders, made, cured and tested in accordance with ASTM C 192 and ASTM C 39. Test 3 compression test cylinders at 7 days and 3 at 28 days. Average compressive strength for the 3 cylinders tested at 28 days for any given trial batch shall be not less than 125 percent of the specified compressive strength.

3. Perform sieve analysis of the combined aggregate for each trial batch according to of ASTM C 136. Report percentage passing each sieve.

4. In mix designs for Class A and D concrete, fine aggregate shall not exceed 41 percent of total aggregate by weight.

C. Shrinkage Limitations, Class A and D Concrete

1. Maximum concrete shrinkage for specimens cast in the laboratory from the trial batch: 0.036 percent as measured at 21-day drying age, or 0.042 percent at 28-day drying age. Use for construction only mix designs that meet trial batch shrinkage requirements. Shrinkage limitations apply only to Class A and D concrete.

2. Maximum concrete shrinkage for specimens cast in the field shall not exceed the trial batch maximum shrinkage requirement by more than 25 percent.

3. If the required shrinkage limitation is not met during construction, take any or all of the following actions, at no additional cost to the City, for securing the specified shrinkage requirements: Changing the source or aggregates, cement or admixtures; reducing water content; washing of aggregate to reduce fines; increasing the number of construction joints; modifying the curing requirements; or other actions designed to minimize shrinkage or its effects.

D. Selecting Ingredient Proportions for Concrete:

1. Proportion concrete mix according to ACI 301, Chapter 3.

2. Establish concrete mix design by laboratory trial batches prepared by independent testing laboratory, or on basis of previous field experience in accordance with provisions of ACI 318, Item 5.3; however, minimum cement content for each class of concrete shall not be less than specified.

3. Concrete mix design data submitted for review shall have average 28-day compressive strength calculated in accordance with ACI 318, Item 5.3.2.1. When data is not available to determine standard deviation in accordance with ACI 318, Item 5.3.1, average 28-day strength of mix design shall conform to ACI 318, Table 5.3.2.2.

E. Water-Cement Ratios:

1. Maximum allowable water-cement ratios shall be as follows:

   a. Concrete for liquid-containing structures: 0.45.

   b. Concrete subjected to brackish water, salt spray or deicers: 0.40.

   c. All other concrete: 0.55.

2. Superplasticizer may be added to maintain specified maximum water-cement ratios. Include free water in aggregate in water-cement ratio computations.

F. Adjustment of Mix Proportions: After sufficient data becomes available during construction, mix may be adjusted upon approval of Project Manager, in accordance with ACI 318, Item 5.5; however, minimum cement content for each class of concrete shall not be less than specified.

G. Entrained Air: Air-entrain all concrete except drilled shafts. Total air content in accordance with ASTM C 173: 4 to 6 percent.

H. Consistency, Workability, and Slump:

1. The quantity of water in a batch of concrete shall be just sufficient, with a normal mixing period, to produce concrete which can be worked properly into place without segregation, and which can be compacted by vibratory methods as specified, to give the desired strength, density, impermeability and smoothness of surface. Change the quantity of water as necessary, with variations in the nature or moisture content of the aggregates, to maintain uniform production of a desired consistency. Determine the consistency of the concrete in successive batches by slump tests in accordance with ASTM C 143. Slumps shall be as follows:

Concrete Type	Minimum Slump	Maximum Slump
Portland Cement Concrete:	2"	4"
Concrete to be dosed with superplasticizer:	1"	3"
Normal Weight Concrete after dosing with superplasticizer:	4"	9"
Lightweight Concrete after dosing with superplasticizer:	4"	7"
Drilled Shaft Concrete:	4"*	8"

* Minimum slump where drilled shafts are cast in temporary casings: 5 inches.

2. Specified slump shall apply at time when concrete is discharged at job site. Perform slump tests to monitor uniformity and consistency of concrete delivered to job site; however, do not use as basis for mix design. Do not exceed water-cement ratios specified.

I. Admixtures: Proportion admixtures according to manufacturer's recommendations. Use of accelerator is permitted when air temperature is less than 40 degrees F. Use of retarder is permitted when temperature of placed concrete exceeds 65 degrees F.

J. High-Range Water Reducers (Superplasticizers): Use superplasticizer to improve workability of concrete or delay hydration of cement, in accordance with requirements and recommendations of product manufacturer and approved submittals.

K. Concrete Classification and Strength:

1. Strength: Conform to values for class of concrete indicated on Drawings for each portion of Work. Requirements are based on 28-day compressive strength. If high early-strength concrete is allowed, requirements are based on 7-day compressive strength.

2. Classification:

Class (Normal-weight)	Minimum 28-Day Compressive Strength (psi)	Minimum Cement Content Pounds per Cubic Yard
Concrete for Structures Containing Water or Wastewater		
A	4000	564 (6 Sacks)
B	1500	329 (3-1/2 Sacks)
C	3000	470 (5 Sacks)
D	5000	658 (7 Sacks)
H	3000	611 (6-1/2 Sacks)
Concrete for Buildings, Slabs on Grade and Miscellaneous Structures		
AB	4000	Not Applicable
BB	1500	Not Applicable
CB	3000	Not Applicable
DB	5000	Not Applicable

Class (Light-weight)	Minimum 28-Day Compressive Strength (psi)	Minimum Cement Content Pounds per Cubic Yard
E	3000	Not Applicable
F	4000	Not Applicable
G	5000	Not Applicable

3. Maximum size aggregate for Class H concrete: 3/8 inch. Maximum size aggregate for all other normal-weight concrete: 1-1/2 inches, except as specified in Paragraph 2.01D.4.

4. When required strength is not obtained with minimum cement content as specified, add cement, lower water-cement ratio or provide other aggregates as necessary.

5. In addition to conforming to specified strength, lightweight concrete must be within specified unit weight limits. Maximum air-dry unit weight is 118 pounds per cubic foot; minimum is 110 pounds per cubic foot unless shown otherwise on Drawings. Determine air-dry unit weight in accordance with ASTM C 567. Correlate air-dry unit weight with fresh unit weight of the same concrete as a basis for acceptance during construction.

L. Use of Classes of Concrete:

1. Use classes of concrete as indicated on the Drawings and in other specifications.

2. Liquid-containing structures: If not otherwise indicated, use the following classes for structures containing water or wastewater and for utility applications in the locations described:

   a. Class A: All reinforced concrete and where not otherwise defined.

   b. Class B: Unreinforced concrete used for plugging pipes, seal slabs, thrust blocks and trench dams, unless indicated otherwise.

   c. Class H: Fill and topping. Where concrete fill thickness exceeds 3 inches in the majority of a placement and is not less than 1.5 inches thick, Class A concrete may be used.

3. All other structures: If not otherwise indicated, use the following classes in the locations described:

   a. Class AB: All reinforced concrete and where not otherwise defined.

   b. Class CB: Duct banks; see Section 16402 - Underground Duct Banks for additional requirements.

   c. Class BB: Unreinforced concrete fill under structures.

2.03 MIXING NORMAL WEIGHT CONCRETE

A. Conform to ACI 301, Chapter 7.

B. Ready-Mixed Concrete:

1. Measure, batch, mix and transport ready-mixed concrete according to ASTM C 94. Plant equipment and facilities shall conform to NRMCA "Certification of Ready Mixed Concrete Production Facilities".

2. Provide batch tickets with information specified in ASTM C 94. Deliver batch ticket with concrete and give to City's on-site testing laboratory representative.

C. Batch Mixing at Site:

1. Mix concrete in batch mixer conforming to requirements of CPMB "Concrete Plant Mixer Standards". Use mixer equipped with suitable charging hopper, water storage tank and water measuring device. Batch mixer shall be capable of mixing aggregates, cement and water into uniform mass within specified mixing time, and of discharging mix without segregation. Operate mixer according to rated capacity and recommended revolutions per minute printed on manufacturer's rating plate.

2. Charge batch into mixer so some water will enter before cement and aggregates. Keep water running until one-fourth of specified mixing time has elapsed. Provide controls to prevent discharging until required mixing time has elapsed. When concrete of normal weight is specified, provide controls to prevent addition of water during mixing. Discharge entire batch before mixer is recharged.

3. Mix each batch of 2 cubic yards or less for not less than 1 minute and 30 seconds. Increase minimum mixing time 15 seconds for each additional cubic yard or fraction of cubic yard.

4. Keep mixer clean. Replace pick-up and throw-over blades in drum when they have lost 10 percent of original depth.

D. Admixtures:

1. Charge air-entraining and chemical admixtures into mixer as solution using automatic dispenser or similar metering device. Measure admixture to accuracy within $\pm$ 3 percent. Do not use admixtures in powdered form.

2. Two or more admixtures may be used in same concrete, provided that admixtures in combination retain full efficiency and have no deleterious effect on concrete or on properties of each other. Inject admixtures separately during batching sequence.

3. Add retarding admixtures as soon as practicable after addition of cement.

E. Temperature Control:

1. When ambient temperature falls below 40 degrees F, keep as-mixed temperature above 55 degrees F to maintain concrete above minimum placing temperature.

2. When water or aggregate has been heated, combine water with aggregate in mixer before cement is added. Do not add cement to mixtures of water and aggregate when temperature of mixture is greater than 100 degrees F.

3. In hot weather, maintain temperature of concrete below maximum placing temperature. When necessary, temperature may be lowered by cooling ingredients, cooling mixer drum by fog spray, using chilled water or well-crushed ice in whole or part for added water, or arranging delivery sequence so that time of transport and placement does not generate unacceptable temperatures.

4. Submit hot weather and cold weather concreting plans for approval.

2.04 MIXING LIGHTWEIGHT CONCRETE

A. Determining Absorption of Aggregates: Mixing procedures vary according to total absorption by weight of lightweight aggregates. Determine total absorption by weight before predamping in accordance with ASTM C 127.

B. Ten Percent or Less Absorption: Follow same requirements as for mixing normal-weight concrete when preparing concrete made with low-absorptive lightweight aggregates having 10 percent or less total absorption by weight. To be low-absorptive, aggregates must absorb less than 2 percent additional water in first hour after mixing.

C. More Than 10 Percent Absorption: Batch and mix concrete made with lightweight aggregates having more than 10 percent total absorption by weight, as follows:

1. Place approximately 80 percent of mixing water in mixer.

2. If aggregates are pre-dampened, add air-entraining admixture and all aggregates. Mix for minimum of 30 seconds, or 5 to 10 revolutions of truck mixer.

3. When aggregates have not been predampened, mix aggregates and water for minimum of 1 minute and 30 seconds, or 15 to 30 revolutions of truck mixer. Then add air-entraining admixture and mix for additional 30 seconds.

4. Then, in the following sequence, add specified or permitted admixtures (other than air-entraining agent), all cement, and mixing water previously withheld.

5. Complete mixing using procedures for normal-weight concrete.

2.05 MASS CONCRETE

A. Do not use high early-strength cement (Type III) or accelerating admixtures.

B. Use high-range water-reducing admixture (superplasticizer) to minimize water content and cement content.

C. Specified water-reducing retarding admixture may be required to prevent cold joints when placing large quantities of concrete, to permit revibration of concrete, to offset effects of high temperature in concrete or weather, and to reduce maximum temperature or rapid temperature rise.

2.06 EQUIPMENT

A. Select equipment of size and design to ensure continuous flow of concrete at delivery end. Conform to following equipment and operations requirements.

B. Truck mixers, agitators and manner of operation: Conform to ASTM C 94. Use of non-agitating equipment for transporting concrete is not permitted.

C. Belt conveyors: Configure horizontally, or at a slope causing no segregation or loss. Use approved arrangement at discharge end to prevent separation. Discharge long runs without separation into hopper.

D. Chutes: Metal or metal-lined (other than aluminum). Arrange for vertical-to-horizontal slopes not more than 1 to 2 nor less than 1 to 3. Chutes longer than 20 feet or not meeting slope requirements may be used if concrete is discharged into hopper before distribution.

E. Do not use aluminum or aluminum-alloy pipe or chutes for conveying concrete.

PART 3 EXECUTION

3.01 SPECIAL CONSIDERATIONS

A. Concreting Under Water: Not permitted except where shown otherwise on Drawings or approved by City Engineer. When shown or permitted, deposit concrete under water by methods acceptable to the City Engineer so fresh concrete enters mass of previously-placed concrete from within, causing water to be displaced with minimum disturbance at surface of concrete.

B. Protection from Adverse Weather: Unless adequate protection is provided or City Engineer's approval is obtained, do not place concrete during rain, sleet, snow or freezing weather. Do not permit rainwater to increase mixing water or to damage surface finish. If rainfall occurs after placing operations begin, provide adequate covering to protect Work.

3.02 PREPARATION OF SURFACES FOR CONCRETING

A. Earth Surfaces:

1. Under interior slabs on grade, install vapor barrier. Lap joints at least 6 inches and seal watertight with tape, or sealant applied between overlapping edges and ends. repair vapor barrier damaged during placement of reinforcing and inserts with vapor barrier material; lap over damaged areas at least 6 inches and seal watertight.

2. Other Earth Surfaces: Thoroughly wet by sprinkling prior to placing concrete, and keep moist by frequent sprinkling up to time of placing concrete thereon. Remove standing water. Surfaces shall be free from standing water, mud and debris at the time of placing concrete.

B. Construction Joints:

1. Definition: Concrete surfaces upon or against which concrete is to be placed, where the placement of the concrete has been interrupted so that, in the judgment of the Project Manager, new concrete cannot be incorporated integrally with that previously placed.

2. Interruptions: When placing of concrete is to be interrupted long enough for the concrete to take a set, use forms or other means to shape the working face to secure proper union with subsequent work. Make construction joints only where acceptable to the Project Manager.

3. Preparation: Give horizontal joint surfaces a compacted, roughened surface for good bond. Except where the Drawings call for joint surfaces to be coated, clean joint surfaces of laitance, loose or defective concrete and foreign material by hydroblasting or sandblasting (exposing aggregate), roughen surface to expose aggregate to a depth of at least 1/4 inch and wash thoroughly. Remove standing water from the construction joint surface before new concrete is placed.

4. After surfaces have been prepared cover approximately horizontal construction joints with a 3-inch lift of a grout mix consisting of Class A concrete batched without coarse aggregate; place and spread grout uniformly. Place wall concrete on the grout mix immediately thereafter.

C. Set and secure reinforcement, anchor bolts, sleeves, inserts and similar embedded items in the forms where indicated on Contract Drawings, shop drawings and as otherwise required. Obtain Project Manager's acceptance before concrete is placed. Accuracy of placement is the sole responsibility of the Contractor.

D. Place no concrete until at least 4 hours after formwork, inserts, embedded items, reinforcement and surface preparation have been completed and accepted by the Project Manager. Clean surfaces of forms and embedded items that have become encrusted with grout or previously-placed concrete before placing adjacent concrete.

E. Casting New Concrete Against Old: Where concrete is to be cast against old concrete (any concrete which is greater than 60 days of age), thoroughly clean and roughen the surface of the old concrete by hydro-blasting or sandblasting (exposing aggregate). Coat joint surface with epoxy bonding agent following manufacturer's written instructions, unless indicated otherwise. Unless noted otherwise, this provision does not apply to vertical wall joints where waterstop is installed.

F. Protection from Water: Place no concrete in any structure until water entering the space to be filled with concrete has been properly cut off or diverted and carried out of the forms, clear of the work. Deposit no concrete underwater. Do not allow still water to rise on any concrete until concrete has attained its initial set. Do not allow water to flow over the surface of any concrete in a manner and at a velocity that will damage the surface finish of the concrete. Pumping, dewatering and other necessary operations for removing ground water, if required, are subject to Project Manager's review.

G. Corrosion Protection: Position and support pipe, conduit, dowels and other ferrous items to be embedded in concrete construction prior to placement of concrete so there is at least a 2 inch clearance between them and any part of the concrete reinforcement. Do not secure such items in position by wiring or welding them to the reinforcement.

H. Where practicable, provide for openings for pipes, inserts for pipe hangers and brackets, and setting of anchors during placing of concrete.

I. Accurately set anchor bolts and maintain in position with templates while they are being embedded in concrete.

J. Cleaning: Immediately before concrete is placed, thoroughly clean dirt, grease, grout, mortar, loose scale, rust and other foreign substances from surfaces of metalwork to be in contact with concrete.

3.03 HANDLING, TRANSPORTING AND PLACING CONCRETE

A. Conform to applicable requirements of Chapter 8 of ACI 301 and this Section. Use no aluminum materials in conveying concrete.

B. Rejected Work: Remove concrete found to be defective or non-conforming in materials or workmanship. Replace rejected concrete with concrete meeting requirements of Contract Documents, at no additional cost to the City.

C. Unauthorized Placement: Place no concrete except in the presence of the Project Manager. Notify the Project Manager in writing at least 24 hours before placement of concrete.

D. Placement in Wall Forms:

1. Do not drop concrete through reinforcing steel.

2. Do not place concrete in any form so as to leave an accumulation of mortar on form surfaces above the concrete.

3. Pump concrete or use hoppers and, if necessary, vertical ducts of canvas, rubber or metal (other than aluminum) for placing concrete in forms so it reaches the place of final deposit without separation. Free fall of concrete shall not exceed 4 feet below the ends of pump hoses, ducts, chutes or buggies. Uniformly distribute concrete during depositing.

4. Do not displace concrete in forms more than 6 feet in horizontal direction from place where it was originally deposited.

5. Deposit in uniform horizontal layers not deeper than 2 feet; take care to avoid inclined layers or inclined construction joints except where required for sloping members.

6. Place each layer while the previous layer is still soft. Rate of placement shall not exceed 5 feet of vertical rise per hour.

7. Provide sufficient illumination in form interior so concrete at places of deposit is visible from the deck or runway.

E. Conveyors and Chutes: Design and arrange ends of chutes, hopper gates and other points of concrete discharge in the conveying, hoisting and placing system so concrete passing from them will not fall separated into whatever receptacle immediately receives it. Conveyors, if used, shall be of a type acceptable to the City Engineer. Do not use chutes longer than 50 feet. Slope chutes so concrete of specified consistency will readily flow. If a conveyor is used, it shall be wiped clean by a device operated in such a manner that none of the mortar adhering to the belt will be wasted. All conveyors and chutes shall be covered.

F. Placement of Slabs: In hot or windy weather, conducive to plastic shrinkage cracks, apply evaporation retardant to slab after screeding in accordance with manufacturer's instructions and recommendations. Do not use evaporation retardant to increase water content of the surface cement paste. Place concrete for sloping slabs uniformly from the bottom of the slab to the top, for the full width of the placement. As work progresses, vibrate and carefully work concrete around slab reinforcement. Screed the slab surface in an up-slope direction.

G. Concrete Temperature: When placed, not more than 90 degrees F nor less than 55 degrees F for sections less than 12 inches thick, nor less than 50 degrees for all other sections. Do not heat concrete ingredients to a temperature higher than that necessary to keep the temperature of the mixed concrete, as placed, from falling below the specified minimum temperature. When concrete temperature is 85 degrees F or above, do not exceed 60 minutes between introduction of cement to the aggregates and discharge. When the weather is such that the concrete temperature would exceed 90 degrees F, employ effective means, such as pre-cooling of aggregates and mixing water, using ice or placing at night, as necessary to maintain concrete temperature, as placed, below 90 degrees F.

H. Cold Weather Placement: Conform to ACI 306.1 - Standard Specification for Cold Weather Concreting, and the following.

1. Remove snow, ice and frost from surfaces, including reinforcement, against which concrete is to be placed. Before beginning concrete placement, thaw the subgrade to a minimum depth of 6 inches. Warm reinforcement and embedded items to above 32 degrees F prior to concrete placement.

2. Maintain concrete temperature above 50 degrees F for at least 3 days after placement.

3.04 PUMPING OF CONCRETE

A. If pumped concrete does not produce satisfactory results, in the judgment of the Project Manager, discontinue pumping operations and proceed with the placing of concrete using conventional methods.

B. Pumping Equipment: Use a 2-cylinder pump designed to operate with only one cylinder if one is not functioning, or have a standby pump on site during pumping.

C. The minimum hose (conduit) diameter: Comply with ACI 304.2R.

D. Replace pumping equipment and hoses (conduits) that do not function properly.

E. Do not use aluminum conduits for conveying concrete.

F. Field Control: Take samples for slump, air content and test cylinders at the placement (discharge) end of the line.

3.05 CONCRETE PLACEMENT SEQUENCE

A. Place concrete in a sequence acceptable to the Project Manager. To minimize effects of shrinkage, place concrete in units bounded by construction joints shown. Place alternate units so each unit placed has cured at least 7 days for hydraulic structures, or 3 days for other structures, before contiguous unit or units are placed, except do not place corner sections of vertical walls until the 2 adjacent wall panels have cured at least 14 days for hydraulic structures and 7 days for other structures.

B. Level the concrete surface whenever a run of concrete is stopped. To ensure straight and level joints on the exposed surface of walls, tack a wood strip at least 3/4-inch thick to the forms on these surfaces. Carry concrete about 1/2 inch above the underside of the strip. About one hour after concrete is placed, remove the strip, level irregularities in the edge formed by the strip with a trowel and remove laitance.

3.06 TAMPING AND VIBRATING

A. Thoroughly settle and compact concrete throughout the entire depth of the layer being consolidated, into a dense, homogeneous mass; fill corners and angles, thoroughly embed reinforcement, eliminate rock pockets and bring only a slight excess of water to the exposed surface of concrete during placement. Use ACI 309R Group 3 immersion-type high-speed power vibrators (8,000 to 12,000 rpm) in sufficient number and with sufficient (at least one) standby units. Use Group 2 vibrators only when accepted by the City Engineer for specific locations.

B. Use care in placing concrete around waterstops. Carefully work concrete by rodding and vibrating to make sure air and rock pockets have been eliminated. Where flat-strip type waterstops are placed horizontally, work concrete under waterstops by hand, making sure air and rock pockets have been eliminated. Give concrete surrounding the waterstops additional vibration beyond that used for adjacent concrete placement to assure complete embedment of waterstops in concrete.

C. Concrete in Walls: Internally vibrate, ram, stir, or work with suitable appliances, tamping bars, shovels or forked tools until concrete completely fills forms or excavations and closes snugly against all surfaces. Do not place subsequent layers of concrete until previously-placed layers have been so worked. Provide vibrators in sufficient numbers, with standby units as required, to accomplish the results specified within 15 minutes after concrete of specified consistency is placed in the forms. Keep vibrating heads from contact with form surfaces. Take care not to vibrate concrete excessively or to work it in any manner that causes segregation of its constituents.

3.07 PLACING MASS CONCRETE

A. Observe the following additional restrictions when placing mass concrete.

1. Use specified superplasticizer.

2. Maximum temperature of concrete when deposited: 70 degrees F.

3. Place in lifts approximately 18 inches thick. Extend vibrator heads into previously-placed layer.

3.08 REPAIRING SURFACE DEFECTS AND FINISHING

A. Conform to Section 03350 - Concrete Finishing.

3.09 CURING

A. Conform to Section 03390 - Concrete Curing.

3.10 PROTECTION

A. Protect concrete against damage until final acceptance by the City.

B. Protect fresh concrete from damage due to rain, hail, sleet or snow. Provide such protection while the concrete is still plastic and whenever such precipitation is imminent or occurring.

C. Do not backfill around concrete structures or subject them to design loadings until all components of the structure needed to resist the loading are complete and have reached the specified 28-day compressive strength, except as authorized otherwise by the City Engineer.

END OF SECTION

SECTION 03350

CONCRETE FINISHING

PART 1 GENERAL

1.01 SECTION INCLUDES

A. Repairing surface defects.

B. Finishing concrete surfaces including both formed and unformed surfaces.

C. Sealing concrete surfaces.

D. Installation of concrete fill and installation of concrete topping in bottoms of clarifiers and thickeners.

1.02 UNIT PRICES

A. No separate payment will be made for concrete finishing under this Section. Include payment in unit price for structural concrete.

1.03 REFERENCES

A. ASTM C 144 - Standard Specification for Aggregate for Masonry Mortar.

B. ASTM C 881 - Specification for Epoxy-Resin-Base Bonding Systems for Concrete.

C. ASTM C 1059 - Standard Specification for Latex Agents for Bonding Fresh to Hardened Concrete.

D. ASTM D 4587 - Conducting Tests on Paint and Related Coatings and Materials Using a Fluorescent UV-Condensation Light-and Water-Exposure Apparatus.

E. ASTM E 1155 - Standard Test Method for Determining Floor Flatness and Levelness Using the F Number System.

1.04 SUBMITTALS

A. Conform to Section 01330 - Submittal Procedures

B. Submit manufacturer's technical literature on the following products proposed for use. Include manufacturer's installation and application instructions and, where specified, manufacturer's certification of conformance to requirements and suitability for use in the applications indicated.

1. Floor hardener.

2. Sealer.

3. Epoxy floor topping.

4. Epoxy penetrating sealer.

5. Latex bonding agent.

6. Epoxy adhesive.

7. Abrasive aggregate.

8. Evaporation retardant.

PART 2 PRODUCTS

2.01 MATERIALS

A. Sealer/Dustproofer (VOC Compliant): Water-based acrylic sealer; non-yellowing under ultraviolet light after 200-hour test in accordance with ASTM D 4587. Conform to local, state and federal solvent emission requirements.

B. Epoxy Floor Topping: Two-component epoxy resin meeting ASTM C 881 Type III, resistant to wear, staining and chemical attack, blended with granite, sand, trap rock or quartz aggregate, trowel-applied over concrete floor. Topping thickness, 1/8 inch; color, gray.

C. Abrasive Aggregate for Nonslip Finish: Fused aluminum oxide grit, or crushed emery aggregate containing not less than 40 percent aluminum oxide and not less than 25 percent ferric oxide. Material shall be factory graded, packaged, rustproof and nonglazing, and unaffected by freezing, moisture and cleaning materials.

D. Epoxy Penetrating Sealer: Low-viscosity, two-component epoxy system designed to give maximum penetration into concrete surfaces. Sealer shall completely seal concrete surfaces from penetration of water, oil and chemicals; prevent dusting and deterioration of concrete surfaces caused by heavy traffic; and be capable of adhering

to floor surfaces subject to hydrostatic pressure from below. Color, transparent amber or gray; surface, nonslip.

E. Latex Bonding Agent: Non-redispersable latex base liquid conforming to ASTM C 1059. When used in water and wastewater treatment structures, bonding agent shall be suitable for use under continuously submerged conditions. Conformance and suitability certification by manufacturer is required.

F. Bonding Grout: Prepare bonding grout by mixing approximately one part cement to one part fine sand meeting ASTM C 144 but with 100 percent passing No. 30 mesh sieve. Mix with water to consistency of thick cream. At Contractor's option, a commercially-prepared bonding agent used in accordance with manufacturer's recommendations and instructions may be used. When used in water and wastewater treatment structures, bonding agent shall be suitable for use under continuously submerged conditions. Conformance and suitability certification by manufacturer is required. Submit manufacturer's technical information on proposed bonding agent.

G. Patching Mortar:

1. Make patching mortar of same materials and of approximately same proportions as concrete, except omit coarse aggregate. Substitute white Portland cement for part of gray Portland cement on exposed concrete in order to match color of surrounding concrete. Determine color by making trial patch. Use minimum amount of mixing water required for handling and placing. Mix patching mortar in advance and allow to stand. Mix frequently with trowel until it has reached stiffest consistency that will permit placing. Do not add water.

2. Proprietary compounds for adhesion or specially formulated cementitious repair mortars may be used in lieu of or in addition to foregoing patching materials provided that properties of bond and compressive strength meet or exceed the foregoing and color of surrounding concrete can be matched where required. Use such compounds according to manufacturer's recommendations. When used in water and wastewater treatment structures, material shall be suitable for use under continuously submerged conditions. Conformance and suitability certification by manufacturer is required.

H. Epoxy Adhesive: Two-component, 100 percent solids, 100 percent reactive compound developing 100 percent of strength of concrete, suitable for use on dry or damp surfaces. Epoxy used to inject cracks and as a binder in epoxy mortar shall meet ASTM C 881, Type VI. Epoxy used as a bonding agent for fresh concrete shall meet ASTM C 881, Type V.

I. Non-shrink Grout: See Section 03600 - Structural Grout.

J. Spray-Applied Coating: Acceptable products are Thoro System Products "Thoroseal Plaster Mix" or equal. Color: Gray.

K. Concrete Topping: Class H concrete with 3/8-inch maximum coarse aggregate size, as specified in Section 03310 - Structural Concrete.

L. Concrete Fill: Class H concrete with 3/8-inch maximum coarse aggregate size, (Class C where fill thickness exceeds 3 inches throughout a placement), as specified in Section 03310 - Structural Concrete.

M. Evaporation Retardant: Confilm, manufactured by Master Builders; Eucobar, manufactured by Euclid Chemical Company; or equal.

PART 3 EXECUTION

3.01 AGGREGATE CONCEALMENT

A. Unless indicated otherwise on Drawings or approved by City Engineer, all surfaces to be finished shall be free of exposed aggregate.

3.02 REPAIRING SURFACE DEFECTS

A. Defective Areas: Repair immediately after removal of forms. Remove honeycombed and other defective concrete down to sound concrete but in no case to a depth less than one inch. Make edges of cuts perpendicular to concrete surface. Thoroughly work bonding grout into the surface with a brush as that the entire surface is covered. Alternatively, a proprietary bonding agent may be used. Use bonding agent in accordance with manufacturer's instructions. While bonding coat is still tacky, apply premixed patching mortar. Thoroughly consolidate mortar into place and strike off to leave patch slightly higher than surrounding surface. To permit initial shrinkage, leave undisturbed for at least 1 hour before final finishing. Keep patched area damp for 7 days. Alternatively, a proprietary cementitious repair mortar may be used and placed in accordance with manufacturer's instructions. Do not use metal tools in finishing patches in formed walls which will be exposed.

B. Tie Holes: Patch holes immediately after removal of forms. After cleaning and roughening with a wire brush on a rotary drill, thoroughly dampen tie hole and fill solid with patching mortar. Taper tie holes shall have the plug, specified in Section 03100 - Concrete Formwork, driven into the hole to the center of the wall before grouting. Completely fill taper tie holes with patching mortar except that non-shrink grout shall be used for all walls in contact with soil or liquid. On wall faces exposed to view, fill the outer 2 inches of the taper tie hole with patching mortar blended to match adjacent concrete.

C. Cracks: Repair cracks in excess of 0.01 inch by pressure injection of moisture-insensitive epoxy-resin system. Submit proposed material and method of repair for approval prior to making repairs.

D. Structural Repair: When required, make structural repairs after prior approval of City Engineer as to method and procedure, using specified epoxy adhesive or approved epoxy mortar.

3.03 FINISHING OF FORMED SURFACES

A. Unfinished Surfaces: Finish is not required on surfaces concealed from view in completed structure by earth, ceilings or similar cover, unless indicated otherwise on Drawings.

B. Rough Form Finish:

1. No form facing material is required on rough form finish surfaces.

2. Patch tie holes and defects. Chip off fins exceeding 1/4 inch in height.

3. Rough form finish may be used on concrete surfaces which will be concealed from view by earth in completed structure, except concealed surfaces required to have smooth form finish, as shown on Drawings.

C. Smooth Form Finish:

1. Form facing shall produce smooth, hard, uniform texture on concrete. Use plywood or fiberboard linings or forms in as large sheets as practicable, and with smooth, even edges and close joints.

2. Patch tie holes and defects. Rub fins and joint marks with wooden blocks to leave smooth, unmarred finished surface.

3. Provide smooth form finish on the wet face of formed surfaces of water-holding structures, and of other formed surfaces not concealed from view by

earth in completed structure, except where otherwise indicated on Drawings. Walls that will be exposed after future construction, at locations indicated on Drawings, shall have smooth form finish. Smooth form finish on exterior face of exterior walls shall extend 2 feet below final top of ground elevation. Exterior face of all perimeter grade beams shall have smooth form finish for full depth of grade beam.

D. Rubbed Finish:

1. Use plywood or fiberboard linings or forms in as large sheets as practicable, and with smooth, even edges and close joints.

2. Remove forms as soon as practicable, repair defects, wet surfaces, and rub with No. 16 carborundum stone or similar abrasive. Continue rubbing sufficiently to bring surface paste, remove form marks and fins, and produce smooth, dense surface of uniform color and texture. Do not use cement paste other than that drawn from concrete itself. Spread paste uniformly over surface with brush. Allow paste to reset, then wash surface with clean water.

3. Use rubbed finish at locations indicated on Drawings, except where rubbed finish is indicated for a wall which will be containing a liquid, use spray-applied coating.

E. Spray-applied Coating: At Contractor's option, in lieu of rubbed finish, spray-applied coating may be applied after defects have been repaired and fins removed. Remove form oil, curing compound and other foreign matter that would prevent bonding of coating. Apply coating in uniform texture and color in accordance with coating manufacturer's instructions.

F. Related Unformed Surfaces: Tops of piers, walls, bent caps, and similar unformed surfaces occurring adjacent to formed surfaces shall be struck smooth after concrete is placed. Float unformed surfaces to texture reasonably consistent with that of formed surfaces. Continue final treatment on formed surfaces uniformly across unformed surfaces.

3.04 HOT WEATHER FINISHING

A. When hot weather conditions exist, as defined by Section 03310 - Structural Concrete and as judged by the City Engineer, apply evaporation retardant to the surfaces of slabs, topping and concrete fill placements immediately after each step in the finishing process has been completed.

3.05 FINISHING SLABS AND SIMILAR FLAT SURFACES TO CLASS A, B, AND C TOLERANCES

A. Apply Class A, B, and C finishes at locations indicated on Drawings.

B. Shaping to Contour: Use strike-off templates or approved compacting-type screeds riding on screed strips or edge forms to bring concrete surface to proper contour. See Section 03100 - Concrete Formwork for edge forms and screeds.

C. Consolidation and Leveling: Concrete to be consolidated shall be as stiff as practicable. Thoroughly consolidate concrete in slabs and use internal vibration in beams and girders of framed slabs and along bulkheads of slabs on grade. Consolidate and level slabs and floors with vibrating bridge screeds, roller pipe screeds or other approved means. After consolidation and leveling, do not permit manipulation of surfaces prior to finishing operations.

D. Tolerances for Finished Surfaces: Check tolerances by placing straightedge of specified length anywhere on slab. Gap between slab and straightedge shall not exceed tolerance listed for specified class.

Class	Straightedge Length in Feet	Tolerance in Inches
A	10	1/8
B	10	1/4
C	2	1/4

E. Raked Finish: After concrete has been placed, struck off, consolidated and leveled to Class C tolerance, roughen surface before final set. Roughen with stiff brushes or rakes to depth of approximately 1/4 inch. Notify City Engineer prior to placing concrete requiring initial raked surface finish so that acceptable raked finish standard may be established for project. Protect raked, base-slab finish from contamination until time of topping. Provide raked finish for following:

1. Surfaces to receive bonded concrete topping or fill.

2. Steep ramps, as noted on Drawings.

3. Additional locations as noted on Drawings.

F. Float Finish:

1. After concrete has been placed, struck off, consolidated and leveled, do not work further until ready for floating. Begin floating when water sheen has disappeared, or when mix has stiffened sufficiently to permit proper operation

of power-driven float. Consolidate surface with power-driven floats. Use hand floating with wood or cork-faced floats in locations inaccessible to power-driven machine and on small, isolated slabs.

2. After initial floating, re-check tolerance of surface with 10-foot straightedge applied at not less than two different angles. Cut down high spots and fill low spots to Class B tolerance. Immediately re-float slab to a uniform, smooth, granular texture.

3. Provide float finish at locations not otherwise specified and not otherwise indicated on Drawings.

G. Trowel Finish:

1. Apply float finish as previously specified. After power floating, use power trowel to produce smooth surface which is relatively free of defects but which may still contain some trowel marks. Do additional troweling by hand after surface has hardened sufficiently. Do final troweling when ringing sound is produced as trowel is moved over surface. Thoroughly consolidate surface by hand troweling operations.

2. Produce finished surface free of trowel marks, uniform in texture and appearance and conforming to Class A tolerance. On surfaces intended to support floor coverings, remove defects which might show through covering by grinding.

3. Provide trowel finish for floors which will receive floor covering and additional locations indicated on Drawings.

H. Broom or Belt Finish:

1. Apply float finish as previously specified. Immediately after completing floated finish, draw broom or burlap belt across surface to give coarse transverse scored texture.

2. Provide broom or belt finish at locations indicated on Drawings.

3.06 FINISHING SLABS AND SIMILAR FLAT SURFACES TO "F-NUMBER SYSTEM" FINISH

A. Shaping to Contour: Use strike-off templates or approved compacting-type screeds riding on screed strips or edge forms to bring concrete surface to proper contour. Edge forms and screeds: Conform to Section 03100 - Concrete Formwork.

B. Consolidation and Leveling: Concrete to be consolidated shall be as dry as practicable. Thoroughly consolidate concrete in slabs and use internal vibration in beams and girders of framed slabs and along bulkheads of slabs on grade. Consolidate and level slabs and floors with vibrating bridge screeds, roller pipe screeds or other approved means. After consolidation and leveling, do not manipulate surfaces prior to finishing operations.

C. Tolerances for Finished Surfaces: Independent testing laboratory will check floor flatness and levelness in accordance with Paragraph 3.12, Field Quality Control.

D. Float Finish:

1. After concrete has been placed, struck off, consolidated and leveled, do not work further until ready for floating. Begin floating when water sheen has disappeared, or when mix has stiffened sufficiently to permit proper operation of power-driven float. Consolidate surface with power-driven floats. Use hand floating with wood or cork-faced floats in locations inaccessible to power-driven machine and on small, isolated slabs.

2. Check tolerance of surface after initial floating with a 10-foot straightedge applied at not less than two different angles. Cut down high spots and fill low spots. Immediately refloat slab to uniform, smooth, granular texture to F_F20/F_L17 tolerance, unless shown otherwise on Drawings.

3. Provide "F-Number System" float finish at locations indicated on Drawings.

E. Trowel Finish:

1. Apply float finish as previously specified. After power floating, use power trowel to produce smooth surface which is relatively free of defects but which may still contain some trowel marks. Do additional trowelings by hand after surface has hardened sufficiently. Do final troweling when ringing sound is produced as trowel is moved over surface. Thoroughly consolidate surface by hand troweling operations.

2. Produce finished surface free of trowel marks, uniform in texture and appearance and conforming to an F_F25/F_L20 tolerance for slabs on grade and F_F25/F_L17 for elevated slabs, unless shown otherwise on Drawings. On surfaces intended to support floor coverings, remove defects, which might show through covering, by grinding.

3. Provide "F-Number System" trowel finish at locations indicated on Drawings.

3.07 BONDED CONCRETE TOPPING AND FILL

A. Surface Preparation:

1. Protect raked, base-slab finish from contamination until time of topping. Mechanically remove oil, grease, asphalt, paint, clay stains or other contaminants, leaving clean surface.

2. Prior to placement of topping or fill, thoroughly dampen roughened slab surface and leave free of standing water. Immediately before topping or fill is placed, scrub coat of bonding grout into surface. Do not allow grout to set or dry before topping or fill is placed.

B. Concrete Fill:

1. Where concrete fill intersects a wall surface at an angle steeper than 45 degrees from vertical, provide a 1.5-inch deep keyway in the wall at the point of intersection; size keyway so that no portion of the concrete fill is less than 1.5 inches thick. Form keyway in new walls; create by saw cutting the top and bottom lines and chipping in existing walls.

2. Apply wood float finish to surfaces of concrete fill.

3. Provide concrete fill at locations shown on Drawings.

C. Bonded Concrete Topping in Bottom of Clarifiers and Thickeners:

1. Minimum thickness of concrete topping: 1 inch. Maximum thickness when swept in by clarifier and thickener equipment: 3 inches.

2. Compact topping and fill by rolling or tamping, bring to established grade, and float. Topping grout placed on sloping slabs shall proceed uniformly from the bottom of the slab to the top, for the full width of the placement. Coat surface with evaporation retardant as needed between finishing operations to prevent plastic shrinkage cracks.

3. Screed topping to true surface using installed equipment. Protect equipment from damage during sweeping-in process. Perform sweeping-in process under supervision of equipment manufacturer's factory representative. After topping has been screeded, apply wood float finish. During finishing, do not apply water, dry cement or mixture of dry cement and sand to the surface.

4. As soon as topping or fill finishing is completed, coat surface with curing compound. After the topping is set and sufficiently hard in clarifiers and where required by the City Engineer, fill the tank with sufficient water to cover the entire floor for 14 days.

5. Provide bonded concrete topping in bottom of all clarifiers and thickeners.

3.08 EPOXY PENETRATING SEALER

A. Surfaces to receive epoxy penetrating sealer: Apply wood float finish. Clean surface and apply sealer in compliance with manufacturer's instructions.

B. Rooms with concrete curbs or bases: Continue application of floor coating on curb or base to its juncture with masonry wall. Rooms with solid concrete walls or wainscots: Apply minimum 2-inch-high coverage of floor coating on vertical surface.

C. Mask walls, doors, frames and similar surface to prevent floor coating contact.

D. When coving floor coating up vertical concrete walls, curbs, bases or wainscots, use masking tape or other suitable material to keep a neat level edge at top of cove.

E. Provide epoxy penetrating sealer at locations indicated on Drawings.

3.09 EPOXY FLOOR TOPPING

A. Surfaces to receive epoxy floor topping: Apply wood float finish unless recommended otherwise by epoxy floor topping manufacturer. Clean surface and apply epoxy floor topping in compliance with manufacturer's recommendations and instructions. Thickness of topping: 1/8 inch.

B. Rooms with concrete curbs or bases: Continue application of floor coating on curb or base to its juncture with masonry wall. Rooms with solid concrete walls or wainscots: apply 2-inch-high coverage of floor coating on vertical surface.

C. Mask walls, doors, frames and similar surfaces to prevent floor coating contact.

D. When coving floor coating up vertical concrete walls, curbs, bases or wainscots, use masking tape or other suitable material to keep a neat level edge at top of cove.

E. Finished surface shall be free of trowel marks and dimples.

F. Provide epoxy floor topping at locations indicated on Drawings.

3.10 SEALER/DUSTPROOFER

A. Where sealer or sealer/dustproofer is indicated on Drawings, just prior to completion of construction, apply coat of specified clear sealer/dustproofing compound to exposed interior concrete floors in accordance with manufacturer's instructions.

3.11 NONSLIP FINISH

A. Apply float finish as specified. Apply two-thirds of required abrasive aggregate by method that ensures even coverage without segregation and re-float. Apply remainder of abrasive aggregate at right angles to first application, using heavier application of aggregate in areas not sufficiently covered by first application. Re-float after second application of aggregate and complete operations with troweled finish. Perform finishing operations in a manner that will allow the abrasive aggregate to be exposed and not covered with cement paste.

B. Provide nonslip finish at locations indicated on Drawings.

3.12 FIELD QUALITY CONTROL

A. Flatness and levelness of slabs and similar flat surfaces that are indicated on Drawings to receive "F-Number System" finish will be checked by independent testing laboratory employed by City in accordance with Section 01454 - Testing Laboratory Services.

B. Tolerances for "F-Number System" finished surfaces:

1. Floor tolerance shall be determined in accordance with ASTM E 1155.

2. Floor flatness and levelness tolerances:

a. F_F defines maximum floor curvature allowed over 24 inches. Computed on the basis of successive 12-inch elevation differentials, F_F is commonly referred to as the "flatness F-Number."

$F_F = \frac{4.57}{\text{Maximum difference in elevation, in decimal inches, between successive 12-inch elevation differences.}}$

b. F_L defines relative conformity of floor surface to horizontal plane as measured over 10-foot distance. F_L is commonly referred to as "levelness F-number."

$F_L = \frac{12.5}{\text{Maximum difference in elevation, in inches, between two points separated by 10 feet.}}$

3. Achieve specified overall slab tolerance. Minimum local tolerance (1/2 bay, unless otherwise designated by City Engineer): 2/3 of specified tolerance.

4. Tolerance for floated finish: F_F20/F_L17, unless otherwise shown on Drawings.

5. Tolerance for troweled finish: F_F25/F_L20 for slabs on grade, and F_F25/F_L17 for elevated slabs, unless otherwise shown on Drawings.

3.13 CURING

A. Conform to requirements of Section 03390 - Concrete Curing.

END OF SECTION

SECTION 03390

CONCRETE CURING

PART 1 GENERAL

1.01 SECTION INCLUDES

A. Curing of structural concrete.

1.02 UNIT PRICES

A. No separate payment will be made for concrete curing under this Section. Include payment in unit price for structural concrete.

1.03 REFERENCES

A. ACI 308 - Standard Practice for Curing Concrete.

B. ASTM C 171 - Standard Specifications for Sheet Materials for Curing Concrete.

C. ASTM C 309 - Standard Specification for Liquid Membrane-Forming Compounds for Curing Concrete.

D. ASTM D 44587 - Conducting Tests on Paint and Related Coatings and Materials Using a Fluorescent UV-Condensation Light-and Water-Exposure Apparatus.

1.04 DEFINITIONS

A. Mass Concrete: Concrete sections 4 feet or more in least dimension.

1.05 SUBMITTALS

A. Conform to Section 01330 - Submittal Procedures.

B. Product Data: Submit description of proposed curing method for concrete. When use of membrane-forming compound is proposed, submit manufacturer's technical information including material specifications, installation instructions and recommendations, and evidence that compound is satisfactory for intended application. State locations where curing compound will be used.

C. When membrane-forming compounds are to be used, submit certification by the manufacturer of compliance with specified requirements and compatibility with toppings, coatings, finishes, and adhesives to be applied.

PART 2 PRODUCTS

2.01 MATERIALS

A. Membrane-forming Curing Compound: Conform to ASTM C 309, Type 1D, and following requirements.

1. Minimum solids content: 30 percent.

2. Compound shall not permanently discolor concrete. When used for liquid-containing structures, curing compound shall be white-pigmented.

3. When used in areas that are to be coated, or that will receive topping or floor covering, material shall not reduce bond of coating, topping, or floor covering to concrete. Curing compound manufacturer's technical information shall state conditions under which compound will not prevent bond.

4. Conform to local, state and federal solvent emission requirements.

B. Clear Curing and Sealing Compound (VOC Compliant): Conform to ASTM C 309, Type 1, Class B, and the following requirements: 30 percent solids content minimum; non-yellowing under ultraviolet light after 500-hour test in accordance with ASTM D 4587. Sodium silicate compounds are not permitted. Conform to local, state and federal solvent emission requirements.

C. Sheet Material for Curing Concrete: ASTM C 171; waterproof paper, polyethylene film or white burlap-polyethylene sheeting.

D. Curing Mats (for use in Curing Method 2): Heavy shag rugs or carpets, or cotton mats quilted at 4 inches on center; 12 ounce per square yard minimum weight when dry.

E. Water for curing: Clean and potable.

PART 3 EXECUTION

3.01 CURING PROCEDURES

A. Comply with ACI 308 and the requirements specified herein. Protect freshly-deposited concrete from premature drying and excessively hot or cold temperatures. Maintain minimal moisture loss and relatively constant temperature during time necessary for hydration of cement and proper hardening of concrete.

B. Unformed Surfaces: For concrete surfaces not in contact with forms, use one of following procedures immediately after completion of placement and finishing.

1. Ponding or continuous sprinkling.

2. Absorptive mat or fabric kept continuously wet.

3. Sand or other covering kept continuously wet.

4. Continuous steam bath (not exceeding 150 degrees F at surface of concrete).

5. Vapor mist bath.

6. Membrane-forming curing compound applied according to manufacturer's recommendations. After the curing compound has dried, wet slab surfaces and cover with waterproof paper, polyethylene film, or white burlap-polyethylene sheeting after the application of the curing compound. Tape sheet seams together and provide sufficient weights to keep the sheeting in place. Wet the slab surface again if the sheeting becomes dislodged, and replace the sheeting.

7. Other moisture-retaining coverings as approved by City Engineer.

C. Restrictions on Use of Curing Compounds: Unless curing compound manufacturer certifies that curing compound will not prevent bond to cured surface, do not use curing compound on surfaces that will be rubbed or receive additional concrete, mortar, topping, terrazzo or other cementitious finishing materials, on slabs under resilient floors or built-up roofing, or on surfaces to be waterproofed, sealed, hardened or painted.

D. Curing and Sealing Compounds: At locations indicated, cure exposed interior slabs and troweled slabs receiving mastic-applied adhesives with specified clear curing and sealing compound in accordance with manufacturer's recommendations. Do not store materials directly on curing membranes. Use plywood to protect curing membrane from damage. Immediately repair membranes damaged by foot traffic or other operations.

E. Duration of Curing: Continue curing until cumulative number of days or fractions of days during which ambient temperature is above 50 degrees F has totaled 7. Continue curing of water-retaining structures for a total of 14 days. When high-early-strength concrete has been used, continue curing for total of 3 days. Prevent rapid drying at end of curing period.

F. Formed Surfaces: During the curing period keep wet steel forms heated by sun and wood forms in contact with concrete. When forms are to be removed during curing period, employ curing materials or methods immediately. Continue such curing for remainder of curing period.

G. Temperature:

1. Cold Weather. When mean daily temperature of atmosphere is less than 40 degrees F, maintain temperature of concrete between 50 and 70 degrees F for required curing period. When necessary, make arrangements for heating, covering, insulating or housing concrete work in advance of placement to maintain required temperature and moisture conditions. Prevent damage or injury due to concentration of heat. When combustion heaters are necessary in enclosed or protected area where concrete slabs are being placed, vent heaters.

2. Hot Weather. In advance of placement make arrangements for shading, fog spraying, sprinkling, ponding or installation of windbreaks or wet covering of light color. Take such protective measures as quickly as concrete hardening and finishing operations will allow.

3. Temperature Changes. Control so rate of change in temperature of concrete is as uniform as possible. Do not permit temperature change to exceed 5 degrees F in any one hour or 50 degrees F in any 24-hour period.

H. Protection from Mechanical Injury. During curing period, protect concrete from damaging mechanical disturbances, particularly load stresses, heavy shock, and excessive vibration. Protect finished concrete surfaces from damage caused by construction equipment, materials or methods, and by rain or running water. Do not load self-supporting structures in a way that over stresses concrete.

3.02 CURING MASS CONCRETE

A. Observe the following additional restrictions when curing mass concrete.

1. Minimum curing period: 2 weeks.

2. When ambient air temperature falls below 32 degrees F, protect surface of concrete against freezing.

3. Do not use steam or other curing methods that will add heat to concrete.

4. Keep forms and exposed concrete continuously wet for at least the first 48 hours after placing, and whenever surrounding air temperature is above 90 degrees F during final curing period.

5. During 2-week curing period, provide necessary controls to prevent ambient air temperature immediately adjacent to concrete from falling more than 30 degrees F in 24 hours.

END OF SECTION

SECTION 03600

STRUCTURAL GROUT

PART 1 GENERAL

1.01 SECTION INCLUDES

A. Non-shrink grout used wherever grout is shown in the Documents, unless another type is specifically referenced. Two classes of non-shrink grout (Class I and II) and areas of application are specified.

1.02 UNIT PRICES

A. Include the cost for grout in the lump sum for each structure in which it will be used. No separate payment will be made for grout.

B. Measurement for extra grout (Class I and II) is on cubic foot basis. Payment includes associated work performed in accordance with related sections included in the Contract Documents.

C. Refer to Section 01270 - Measurement and Payment for unit price procedures.

1.03 REFERENCES

A. CRD C 621 - Corps of Engineers Specification for Non-shrink Grout

B. ASTM C 109 - Test Method for Compressive Strength of Hydraulic Cement Mortars (Using 2-in or 50-mm Cube Specimens)

C. ASTM C 230 - Specifications for Flow Table for use in Tests of Hydraulic Cement

D. ASTM C 1107 - Standard Specification for Packaged Dry, Hydraulic-Cement Grout (Non-shrink)

1.04 SUBMITTALS

A. Conform to Section 01330 - Submittal Procedures.

B. Quality Control:

1. The Contractor shall submit manufacturer's literature certifying compliance with the specified properties for Class I and II grouts.

2. The Contractor shall submit manufacturer's literature containing instructions and recommendations on the mixing, handling, placement and appropriate uses for each type of grout used in the work.

C. The Contractor shall submit manufacturer's written warranty as specified.

1.05 QUALITY ASSURANCE

A. Field Tests:

1. Compression test specimens will be taken during construction from the first placement of each type of grout, and at intervals thereafter as selected by the Project Manager to ensure continued compliance with these Specifications. The specimens will be made by the Project Manager or its representative.

2. Compression tests and fabrication of specimens for non-shrink grout will be performed as specified in ASTM C 109 at intervals during construction as selected by the Project Manager. A set of three specimens will be made for testing at 7 days, 28 days, and each additional time period as appropriate.

3. Grout already placed which fails to meet the requirements of these Specifications is subject to removal and replacement no additional cost to the City.

4. The cost of laboratory tests on grout will be borne by the City, but the Contractor shall assist the Project Manager in obtaining specimens for testing. However, the Contractor shall be charged for the cost of any additional tests and investigation on work performed which does not meet the Specifications. The Contractor shall supply materials necessary for fabricating the test specimens.

B. Warranty:

1. Provide one-year warranty for work provided under this Section.

2. Manufacturer's warranty shall not contain a disclaimer limiting responsibility to only the purchase price of products or materials furnished.

3. Manufacturer shall warrant participation with Contractor in replacing or repairing grout found to be defective due to faulty materials, as determined by industry standard test methods.

PART 2 PRODUCTS

2.01 APPLICATION

A. The following is a listing of typical applications and the corresponding type of grout which is to be used. Unless indicated otherwise, grouts shall be provided as listed below whether or not called for on the Drawings.

Application:	Type of Grout
Structural member base plates	Non-shrink Class II
Storage tanks and other equipment	Non-shrink Class I
Filling blockout spaces for embedded items such as railing posts, gate guide frames, etc.	Non-shrink Class II (Class I where placement time exceeds 15 minutes)
Under precast concrete elements	Non-shrink Class I
Toppings and concrete fill less than 3 inches thick	Concrete Topping per Section 03310 and Section 03350
Toppings and concrete fill greater than 3 inches thick	Concrete Fill per Section 03310 and Section 03350
Any application not listed above, where grout is called for on the Drawings	Non-shrink Class I, unless noted otherwise

2.02 PREPACKAGED GROUTS

A. Basic Requirements for Cementitious Non-Shrink Grout

1. Provide prepackaged non-shrink grout that is inorganic, flowable, non-gas-liberating, non-metallic, and cement-based, requiring only the addition of water.

2. Deliver grout in original packaging with manufacturer's instructions printed on each container.

3. Select the specific formulation for each class of non-shrink grout specified to conform to that recommended by the manufacturer for the particular application.

4. Compressive strength at 28 days: 7000 psi minimum.

5. Do not use a grout for which the non-shrink property is based on a chemically generated gas or gypsum expansion.

B. Class I Non-Shrink Grout:

1. Supply Class I Grout conforming to these specifications and to CRD C 621 and ASTM C 1107 Grade C and B (as modified below) when tested using the amount of water needed to achieve the following properties:

   a. Fluid consistency (20 to 30 seconds) per CRD C 611 at initial testing.

   b. Fluid consistency (45 seconds) per CRD C 611 at 30 minutes after mixing.

   c. At temperatures of 45, 73.4, and 95 degrees F.

2. To satisfy non-shrink requirements, the length change from placement to time of final set shall not have a shrinkage greater than the amount of expansion measured after final set at 3 and 14 days. The expansion at 3 and 14 days shall not exceed the 28-day expansion.

3. Fluid grout shall pass through the flow cone, with a continuous flow, 1 hour after mixing.

4. Demonstrate in tests that grout maintains contact with the baseplate to provide an minimum effective bearing area of 95 percent of the gross contact area after final set.

5. The grout packaging shall list weight, maximum amount of mixing water to be used, maximum usable working time (pot life) at flowable consistency, and temperature restrictions for preparation and placement within which grout will meet specified requirements.

C. Class II Non-Shrink Grout:

1. Supply Class II Grout confirming to ASTM C 1107 and the following requirements when tested using the amount of water needed to achieve the following properties:

   a. Flowable consistency: 140 percent flow on ASTM C 230, five drops in 30 seconds.

   b. Fluid working time: 15 minutes, minimum.

   c. Flowable duration: 30 minutes, minimum.

2. When tested, the grout shall not bleed at maximum allowed water.

2.03 CURING MATERIALS

A. Curing materials: As specified in Section 03390 - Concrete Curing and as recommended by the manufacturer of prepackaged grouts.

2.04 CONSISTENCY

A. Mix grouts to the consistency necessary to completely fill the space to be grouted. Dry pack consistency is such that the grout is plastic and moldable but will not flow. Where "dry pack" is called for in the Contract Documents, it shall mean a grout of that consistency; the type of grout to be used shall be as specified herein for the particular application.

PART 3 E X E C U T I O N

3.01 PREPARATION

A. Verify that base concrete or masonry has attained design strength before grout is placed.

B. When cementitious grouts are used on concrete surfaces, saturate the concrete surface with water for 24 hours prior to placement of cement-based grout. Upon completion of saturation period remove excess water prior to grouting.

3.02 GROUTING PROCEDURES

A. Prepackaged Grouts: Perform mixing, surface preparation, handling, placing, consolidation, curing, and other means of execution for prepackaged grouts according to the written instructions of the manufacturer. Use prepackaged materials in the quantities and proportions as directed by the manufacturer unless there is certified test data verifying that the specified properties are attained by modified mix.

3.03 CONSOLIDATION

A. Place grout in such a manner, for the consistency necessary for each application, so as to assure that the space to be grouted is completely filled.

END OF SECTION

SECTION 05520

PIPE RAILING

PART 1 GENERAL

1.01 SECTION INCLUDES

A. Aluminum pipe handrails/guardrails and fittings.

1.02 MEASUREMENT AND PAYMENT

A. Unit Prices

1. No separate payment will be made for handrail/guardrail under this section. Include payment in Lump Sum bid item of which the work is required with price breakdown included in the Schedule of Values.

2. Refer to Section 01270 - Measurement and Payment, and Section 01292 - Schedule of Values.

B. Stipulated Price (Lump Sum). If the Contract is a Stipulated Price Contract, payment for work in this Section is included in the total Stipulated Price.

1.03 REFERENCES

A. ASTM B 221 – Specification for Aluminum bars, rods, wires, shapes, and tubes

B. ASTM B 429 – Specification for Aluminum-allow extruded structural pipe and tube

1.04 DESIGN REQUIREMENTS

A. Railing assembly and attachments to resist a concentrated load of 200 pounds applied in any direction at any point and a uniform load of 50 pounds per linear foot applied to the horizontal rails in any direction. The loads shall not be applied simultaneously.

B. Provide exterior railings that allow for thermal movements resulting from the following maximum change (range) in ambient and surface temperatures by preventing buckling, opening of joints, overstressing of components, failure of connections, and other detrimental effects. Base engineering calculation on surface temperatures of materials due to both solar heat gain and nighttime-sky heat loss. Temperature Change (Range): 120 deg F, ambient; 180 deg F, material surfaces.

C. Space support posts 5 feet on center, maximum.

D. Comply with OSHA, City of Houston Building Code, and all applicable agencies

1.05 SUBMITTALS

A. Submit following Section 01330 - Submittal Procedures.

B. Shop Drawings: Indicate profiles, sizes, connection attachments, anchorage, size and type of fasteners, and accessories.

C. Calculations conforming compliance with the design requirements.

PART 2 PRODUCTS

2.01 MANUFACTURER

A. Thompson Fabricating, LLC - TUFrail

B. Approved Equal

2.02 RAILING SYSTEM

A. Railings shall be 1 ½" Schedule 40 (1.90 outside diameter) aluminum pipe alloy 6105-T-5, ASTM-B-429 or ASTM-B-221. The top surface of the top railing shall be smooth and shall not be interrupted by projecting fittings.

B. Posts shall be 1 ½" Schedule 80 (1.90 outside diameter) aluminum pipe alloy 6105-T-5, ASTM-B-429 or ASTM-B-221. Posts shall not interrupt the continuation of the top rail at any point along the railing, including corners and end terminations (OSHA 1910.23).

C. The mid-rail at a corner return shall be able to withstand a 200lb load without loosening. The manufacturer is to determine the post spacing (5' max) for their system and provide physical tests from a laboratory to confirm compliance.

D. The top rail shall be at least 42 inches above the adjacent finished walking surface. The rails shall be spaced such that a 12-inch-diameter sphere cannot pass between them.

E. Toeboard shall conform to OSHA standards. Toeboards shall be a minimum of 4" high and shall be an extrusion that attaches to the posts with clamps that allow for expansion and contraction between posts. Toeboard shall be set ¼" above the walking surface. Toeboard shall be provided on handrails as required by OSHA and/or as shown on the drawings. Toeboard shall be shipped in stock lengths for field installation.

F. Concrete anchors shall be stainless steel type 303 or 304 wedge anchors and shall be furnished by the handrail manufacturer. The anchor design shall include the appropriate reduction factors for spacing and edge distance in accordance with the manufacturers published data.

G. All fasteners shall be aluminum or stainless steel.

H. A self-closing fate shall guard openings in the railing (OSHA 1910.23). Safety chains shall not be used unlsee specifically shown on the drawings.

PART 3 EXECUTION

3.01 EXAMINATION

A. Verify that field conditions are acceptable and ready to receive work.

B. Beginning of installation means erector accepts existing conditions.

3.02 PREPARATION

A. Supply items required to be cast into concrete with setting templates, to appropriate sections.

3.03 INSTALLATION

A. Install components plumb and level, accurately fitted, free from distortion or defects.

B. Provide anchors and sockets required for connecting railings to concrete.

C. General: Fabricate railings to comply with requirements indicated for design, dimensions, member sizes and spacing, details, finish, and anchorage, but not less than that required to support structural loads.

D. Assemble railings in the shop to greatest extent possible to minimize field splicing and assembly. Disassemble units only as necessary for shipping and handling limitations. Clearly mark units for reassembly and coordinated installation. Use connections that maintain structural value of joined pieces.

E. Cut, drill, and punch metals cleanly and accurately. Remove burrs and ease edges to a radius of approximately 1/32 inch, unless otherwise indicated. Remove sharp or rough areas on exposed surfaces.

F. Form work true to line and level with accurate angles and surfaces.

G. Fabricate connections that will be exposed to weather in a manner to exclude water. Provide weep holes where water may accumulate.

H. Cut, reinforce, drill, and tap as indicated to receive finish hardware, screws, and similar items.

I. Connections: Fabricate railings with nonwelded connections, unless otherwise indicated. Welding will not be accepted.

J. Nonwelded Connections: Connect members with concealed mechanical fasteners and fittings. Fabricate members and fittings to produce flush, smooth, rigid, hairline joints.

K. Fittings to be of the internal double tang type activated by a reverse knurl cup point set screw. Reverse knurl is required to ensure that screw does not come loose under vibration. Plain cup point screws will not be accepted. Fittings to be fastened to pipe by means of a 5/16 in. tubular rivet nut and socket head cap screw.

L. Form changes in direction by flush bends or by inserting prefabricated flush-elbow fittings.

M. Form simple and compound curves by bending members in jigs to produce uniform curvature for each repetitive configuration required; maintain cross

section of member throughout entire bend without buckling, twisting, cracking, or otherwise deforming exposed surfaces of components.

N. Close exposed ends of railing members with prefabricated end fittings.

O. Provide wall returns at ends of wall-mounted handrails, unless otherwise indicated. Close ends of returns unless clearance between end of rail and wall is 1/4 inch or less.

P. Brackets, Flanges, Fittings, and Anchors: Provide wall brackets, flanges, miscellaneous fittings, and anchors to interconnect railing members to other work, unless otherwise indicated. Flanges to be sand cast from aluminum alloy 535 with anodized finish and fastened directly to the post by means of two reverse knurl cup point set screws.

Q. Fabricate anchorage devices capable of withstanding loads imposed by railings. Coordinate anchorage devices with supporting structure.

R. Aluminum surfaces in contact with concrete, grout or dissimilar metals shall be protected with a coat of bituminous paint, mylar isolator or other approved material.

S. Provide grounding as shown on the Drawings.

END OF SECTION

PAGE INTENTIONALLY LEFT BLANK

SECTION 05532

ALUMINUM GRATING

PART 1 GENERAL

1.01 SECTION INCLUDES

A. Prefabricated custom-designed aluminum bar gratings.

B. Miscellaneous installation hardware and accessories.

1.02 MEASUREMENT AND PAYMENT

A. No Separate payment will be made under this section. Include payment in Lump Sum bid item of which the work is required with price breakdown included in the Schedule of Values.

1.03 REFRERENCES

A. ASTM B 221 Aluminum Extruded Bars and Shapes.

B. ANSI/NAAMM- MBG-531-09 Metal Bar Grating Manual

1.04 ACTION SUBMITTALS

A. Product Data: The contractor shall submit the manufacturer's catalog pages including load tables, anchor details and standard installation details.

B. Shop drawings: The contractor shall submit for approval shop drawings for the fabrication and erection of all gratings, based on construction drawings of current issue. Include plans, elevations, and details of sections and connections as required. Show type and location of all fasteners.

C. Samples of Grating and Anchorage system shall be submitted for approval.

1.05 QUALITY ASSURANCE

A. Manufacturer Qualification: A company specializing in the manufacture of metal bar gratings with not less than 10 years of documented experience.

B. Fabrication tolerances shall be in accordance with applicable provisions and recommendations of ANSI/NAAMM 531-09 Metal Bar Grating Manual.

PART 2 PRODUCTS

2.01 SOURCE REQUIREMENTS

A. Design is based upon use of gratings as manufactured by Ohio Gratings Inc. and terminology used herein may include reference to the specific performance or product of this manufacturer. Such reference shall be construed only as establishing the quality of materials, operational features and workmanship to be used under this Section and shall not, in any way, be construed as limiting competition.

2.02 MANUFACTURERS

A. Acceptable Manufacturers include Ohio Gratings Inc. 5299 Southway St. SW, Canton, Ohio 44706, 800-321-9800 www.ohiogratings.com , or approved equal.

2.03 MANUFACTURED UNITS

A. Description: Aluminum Dove Tail Pressure Lock Grating type 11-ADT-4: with rectangular bearing bars slotted to receive slotted rectangular cross bars assembled in egg-crate fashion and hydraulically pressed to permanently lock the bars in place.

1. Bearing Bar Spacing: 11/16" on center.

2. Bearing Bar Depth: based on loading requirements and clear span.

3. Bearing Bar Thickness: 3/16" to provide 1/2" space between bars.

4. Cross Bar Spacing: 4" on center.

B. Fabrication: Fabricate cutouts in grating sections for penetrations indicated. Arrange cutouts to permit grating removal without disturbing items penetrating gratings. Band ends and cuts in grating with bars of same size and material as bearing bars.

2.04 DESIGN CRITERIA

A. Loading: Grating Products shall be designed and manufactured to meet the live load conditions of 100 lbs/ Sq Ft with maximum deflection of 1/4" for the clear spans shown on the drawings. Bearing bar depth shall be as shown on the contract drawings or as recommended by the manufacturer to meet the loading requirements, clear span conditions and maximum deflections specified.

B. Slip Resistance: Walking Surfaces shall have a minimum slip resistant coefficient of friction (COF) of 0.8 to meet Americans with Disabilities Act (ADA) guidelines of COF = 0.6 for level surfaces and 0.8 for ramps

C. Materials: Bearing bars and banding are Aluminum Type 6063-T6 and Aluminum Cross Bars are type 6063-T52.

D. Fabrication Tolerances shall be in accordance with ANSI/NAAMM MBG 531-09 Metal Bar Grating Manual.

E. Finish: Gratings shall be Mill finish or A-41 Clear Anodized or Powder Coat Painted (choose color)

2.05 ACCESSORIES

A. Provide appropriate fasteners for type, grade, and class required for the approved anchorage system.

PART 3 EXECUTION

3.01 FIELD VERIFICATION

A. Take field measurements prior to preparation of final shop drawings and fabrication where required to ensure proper fitting of the work.

3.02 INSTALLATION

A. Prior to grating installation, contractor shall inspect supports for correct alignment and conditions for proper attachment and support of the gratings. Any inconsistencies between contract drawings and supporting structure deemed detrimental to grating placement shall be reported in writing to the architect or owner's agent prior to placement.

B. Install grating in accordance with shop drawings and standard installation clearances as recommended by ANSI/NAAMM MBG-531-09 Metal Bar Grating Manual.

C. Protection of Aluminum from Dissimilar Materials:

1. Where aluminum surfaces come into contact with dissimilar metals, surfaces shall be kept from direct contact by painting the dissimilar metal with one coat of bituminous paint or use of other approved insulating material.

2. Where aluminum surfaces come into contact with dissimilar materials such as concrete, masonry or lime mortar, exposed aluminum surfaces shall be painted with one coat of bituminous paint or use of other approved insulating material.

3.03 GRATING ATTACHMENT

A. Use approved attachment system and fasteners to secure grating to supporting members as shown on plans.

END OF SECTION

SECTION 08332

OVERHEAD COILING DOORS

PART 1 - GENERAL

1.1 SUMMARY

A. Section includes:

1. Service doors.

B. Related Section:

1. Division 05 Section "Metal Fabrications" for miscellaneous steel supports.

1.2 MEASUREMENT AND PAYMENT

A. No Separate payment will be made under this section. Include payment in Lump Sum bid item of which the work is required with price breakdown included in the Schedule of Values.

1.3 PERFORMANCE REQUIREMENTS

A. Structural Performance, Exterior Doors: Exterior overhead coiling doors shall withstand the wind loads, the effects of gravity loads, and loads and stresses within limits and under conditions indicated according to SEI/ASCE 7.

1. Wind Loads: Uniform pressure (velocity pressure) of 20 lbf/sq. ft. (960 Pa), acting inward and outward.

B. Windborne-Debris-Impact-Resistance Performance: Provide overhead coiling doors that pass missile-impact and cyclic-pressure tests when tested according to ASTM E 1886 and ASTM E 1996.

1. Large Missile Test: For overhead coiling doors located within 30 feet (9.144 m) of grade.

C. Seismic Performance: Overhead coiling doors shall withstand the effects of earthquake motions determined according to SEI/ASCE 7.

1.4 SUBMITTALS

A. Product Data: For each type and size of overhead coiling door and accessory.

B. Shop Drawings: For each installation and for special components not dimensioned or detailed in manufacturer's product data. Include plans, elevations, sections, details, and attachments to other work.

1. Detail equipment assemblies and indicate dimensions, weights, loads, required clearances, method of field assembly, components, and location and size of each field connection.

C. Samples: For each exposed product and for each color and texture specified.

D. Maintenance Data.

1.5 QUALITY ASSURANCE

A. Installer Qualifications: Manufacturer's authorized representative who is trained and approved for both installation and maintenance of units required for this Project.

B. Electrical Components, Devices, and Accessories: Listed and labeled as defined in NFPA 70, by a qualified testing agency, and marked for intended location and application.

PART 2 - PRODUCTS

2.1 DOOR CURTAIN MATERIALS AND CONSTRUCTION

A. Door Curtains: Fabricate overhead coiling-door curtain of interlocking metal slats, designed to withstand wind loading indicated, in a continuous length for width of door without splices. Unless otherwise indicated, provide slats of thickness and mechanical properties recommended by door manufacturer for performance, size, and type of door indicated, and as follows:

B. Bottom Bar for Service Doors: Consisting of two angles, each not less than 1-1/2 by 1-1/2 by 1/8 inch (38 by 38 by 3 mm) thick; fabricated from metal to match curtain slats and finish.

C. Curtain Jamb Guides: Manufacturer's standard angles or channels and angles of same material and finish as curtain slats unless otherwise indicated, with sufficient depth and strength to retain curtain, to allow curtain to operate smoothly, and to withstand loading. Slot bolt holes for guide adjustment. Provide removable stops on guides to prevent overtravel of curtain.

2.2 HOOD

A. General: Form sheet metal hood to entirely enclose coiled curtain and operating mechanism at opening head. Contour to fit end brackets to which hood is attached.

Roll and reinforce top and bottom edges for stiffness. Form closed ends for surface-mounted hoods and fascia for any portion of between-jamb mounting that projects beyond wall face. Equip hood with intermediate support brackets as required to prevent sagging.

1. Exterior-Mounted Doors: Fabricate hood to act as weather protection and with a perimeter sealant-joint-bead profile for applying joint sealant.

2.3 LOCKING DEVICES

A. Slide Bolt: Fabricate with side-locking bolts to engage through slots in tracks for locking by padlock, located on both left and right jamb sides, operable from coil side.

B. Chain Lock Keeper: Suitable for padlock.

2.4 CURTAIN ACCESSORIES

A. Weatherseals: Equip each exterior door with weather-stripping gaskets fitted to entire perimeter of door for a weathertight installation, unless otherwise indicated.

B. Push/Pull Handles: Equip each push-up-operated or emergency-operated door with lifting handles on each side of door, finished to match door. Provide pull-down straps or pole hooks for doors more than 84 inches (2130 mm) high.

2.5 COUNTERBALANCING MECHANISM

A. General: Counterbalance doors by means of manufacturer's standard mechanism with an adjustable-tension, steel helical torsion spring mounted around a steel shaft and contained in a spring barrel connected to top of curtain with barrel rings. Use grease-sealed bearings or self-lubricating graphite bearings for rotating members.

B. Brackets: Manufacturer's standard mounting brackets of either cast iron or cold-rolled steel plate.

2.6 ELECTRIC DOOR OPERATORS

A. General: Electric door operator assembly of size and capacity recommended and provided by door manufacturer for door and operation-cycles requirement specified, with electric motor and factory-prewired motor controls, starter, gear-reduction unit, solenoid-operated brake, clutch, remote-control stations, control devices, integral gearing for locking door, and accessories required for proper operation.

1. Comply with NFPA 70.
2. Provide control equipment complying with NEMA ICS 1, NEMA ICS 2, and NEMA ICS 6, with NFPA 70 Class 2 control circuit, maximum 24 V, ac or dc.

B. Usage Classification: Electric operator and components capable of operating for not less than number of cycles per hour indicated for each door.

C. Electric Motors: Comply with NEMA designation, temperature rating, service factor, enclosure type, and efficiency requirements specified in Division 11 Section "Common Motor Requirements for Equipment" unless otherwise indicated.

1. Electrical Characteristics:

a. Phase: Single phase.
b. Volts: 120

2. Motor Type and Controller: Reversible motor and controller (disconnect switch) for motor exposure indicated.
3. Motor Size: Minimum size as indicated. If not indicated, large enough to start, accelerate, and operate door in either direction from any position, at a speed not less than 8 in./sec. (203 mm/s) and not more than 12 in./sec. (305 mm/s), without exceeding nameplate ratings or service factor.
4. Operating Controls, Controllers (Disconnect Switches), Wiring Devices, and Wiring: Manufacturer's standard unless otherwise indicated.

D. Obstruction Detection Device: Equip motorized door with indicated external automatic safety sensor capable of protecting full width of door opening. For non-fire-rated doors, activation of device immediately stops and reverses downward door travel.

1. Photoelectric Sensor: Manufacturer's standard system designed to detect an obstruction in door opening without contact between door and obstruction. Provide self-monitoring capability designed to interface with door operator control circuit to detect damage to or disconnection of sensing device.

E. Remote-Control Station: Momentary-contact, three-button control station with push-button controls labeled "Open," "Close," and "Stop."

1. Exterior units, full-guarded, standard-duty, surface-mounted, weatherproof type, NEMA ICS 6, Type 4 enclosure, key operated.

F. Emergency Manual Operation: Equip each electrically powered door with capability for emergency manual operation. Design manual mechanism so required force for door operation does not exceed 30 lbf (133 N).

G. Emergency Operation Disconnect Device: Equip operator with hand-operated disconnect mechanism for automatically engaging manual operator and releasing brake for emergency manual operation while disconnecting motor without affecting timing of limit switch. Mount mechanism so it is accessible from floor level. Include interlock

device to automatically prevent motor from operating when emergency operator is engaged.

H. Motor Removal: Design operator so motor may be removed without disturbing limit-switch adjustment and without affecting emergency manual operation.

I. Audible and Visual Signals: Audible alarm and visual indicator lights in compliance with regulatory requirements for accessibility.

PART 3 - EXECUTION

3.1 INSTALLATION

A. Install overhead coiling doors and operating equipment complete with necessary hardware, anchors, inserts, hangers, and equipment supports; according to manufacturer's written instructions and as specified.

B. Fire-Rated Doors: Install according to NFPA 80.

C. Smoke-Control Doors: Install according to NFPA 80 and NFPA 105.

D. Adjust hardware and moving parts to function smoothly so that doors operate easily, free of warp, twist, or distortion. Lubricate bearings and sliding parts as recommended by manufacturer. Adjust seals to provide weathertight fit around entire perimeter.

3.2 DEMONSTRATION

A. Engage a factory-authorized service representative to train Owner's maintenance personnel to adjust, operate, and maintain overhead coiling doors.

END OF SECTION

SECTION 11133

HORIZONTAL SPLIT CASE CENTRIFUGAL PUMPS

PART 1 GENERAL

1.01 SUMMARY

A. Furnish, install, inspect, test, and place in satisfactory service pumps with motors, coupling with guard, and common base. Pumps are to be connected to drivers by suitably sized couplings.

B. Refer to Section 16171 for requirements for electric motors.

1.02 MEASUREMENT AND PAYMENT

A. Payment for pumps is on a unit price basis for each. Payment includes labor, equipment, and material necessary for installation of the pump, motor, base and accessories. Payment includes all necessary requirements from the manufacturer installation, start-up and testing procedure(s) for the pumps and motors.

1.03 SYSTEM DESCRIPTION

A. Design and Performance Requirements

1. Provide pumps that meet the operating requirements specified in the Pump Schedule in Part 3.

2. Adequately size motor so that each pump is non-overloading throughout entire pump performance curve.

3. Provide pumps and motors that are free from shock, vibration, cavitation, overheating, and noise while operating at specified conditions.

4. Pumps shall be of NSF-61 certified construction.

1.04 SUBMITTALS

A. General

1. Comply with the requirements of Section 01330 - Submittals when preparing and making submittals described in this section.

2. Submit the product data and shop drawings specified below in a single package. Partial submittals will not be reviewed.

3. Submit data for motors in accordance with the requirements of Sections 16171 – Low Voltage Motors

B. Product Data

Submit the following product data:

1. Catalog cuts describing pumps and electric motors. Mark through inapplicable information.

2. Pump Performance Curves:
   a. Show head, capacity, brake horsepower, and pump efficiency curves from shut-off to maximum capacity of pump.

   b. Show head, capacity, brake horsepower, and pump efficiency for points specified in Pump Schedule in Part 3.

   c. Speed versus torque.

3. Data sheets addressing all product features such as materials of construction, design features, factory coatings, and accessories specified in this section.

4. Data sheets providing weight of each pump with motor and maximum hydraulic down thrust (momentary and continuous).

5. Manufacturer's installation instructions.

C. Shop Drawings

1. Submit shop drawings showing dimensions and layout of the pumps and motors specified in this section.

2. When using standard drawings, mark through inapplicable details and information.

D. Factory Test Results

1. Submit certified factory test results prior to shipment of equipment.

2. Do not ship equipment until test results have been approved by the Engineer.

E. Manufacturer's operation and maintenance manuals in accordance with Section 01782.

1.05 QUALITY ASSURANCE

A. System Responsibility: To ensure proper operation, pump manufacturer shall provide both the pumps and the motors.

B. Manufacturer's Certification:

1. Submit Manufacturer's certification that the running amperes of the motor will not exceed the nameplate rating of the motor under all expected operating conditions.
2. Submit Manufacturer's certification that spare parts, seals, bearing, o-rings and power cable shall be available locally for models to be supplied.

C. The pump manufacturer shall provide information to and assist the electrical subcontractor in coordinating all pump motor interfaces.

D. Vibration, when measured in the direction of maximum amplitude on the pump and motor bearing housings, shall not exceed 1.59-mils peak to peak displacement at a maximum peak velocity of 0.1-inch per second at any speed within the specified operating speed range.

E. Pump(s) are to be engineered and manufactured under the certification of ISO-9001:2000.

1.06 PRODUCT DELIVERY, STORAGE AND HANDLING

A. Delivery

1. Deliver all components to site in manufacturer's shipping crates or boxes.
2. Provide flange covers.
3. Ship with bearings lubricated.

B. Storage

1. Store all components off ground.
2. Protect from the weather.

C. Handling

1. Handle all components in accordance with manufacturer's instructions to prevent damage.

PART 2 PRODUCTS

2.01 APPROVED MANUFACTURERS

A. Fairbanks Morse.

B. ITT Goulds.

C. Approved Equal

2.02 PUMP CONSTRUCTION

A. Design

1. Rotation

a. The pump will be clockwise rotation when viewed from the driver end looking at the pump.

2. Impeller

a. The impeller shall be of the enclosed type, double suction type made of 316 SS, Francis vane design, to minimize inlet losses and accommodate high suction lifts.

b. Impeller shall be hydraulically and dynamically balanced to reduce bearing loading. Impeller and rotor shall be balanced to ISO G2.5.

c. Impellers shall be precision cast in one piece with smooth flow contours to promote maximum efficiency.

d. Impellers shall be fixed axially along the shaft by shaft sleeves and sleeve nuts, and secured to the shaft through a precision fit and full-length key.

e. The impeller hub shall be machined for impeller wear rings. Impeller wear rings shall be 316SS and held into position with axial set screws.

3. Casing

a. Close-grained, class 30 cast iron construction conforming to ASTM A48.

b. Designed for working pressures up to 250 psig for all pumps except of 150 hp pump at Sharpstown #1. Designed for working pressure 300 psig for 150 hp pump at Sharpstown #1.

c. Casing shall be axially split along the horizontal shaft centerline with flat-faced suction and discharge flanges and mounting feet cast integral with the lower half casing.

d. Casing shall be lined-bored to assure concentricity and angular alignment.

e. Tapped and plugged holes for priming, vent drain and gauge connections.

f. The upper half casing shall be completely removable without disturbing the suction or discharge piping connections.

g. Suction and discharge connections shall be sized to reduce hydraulic friction losses and to reduce turbulence and pipe noise. All suction and discharge flanges shall be designed for straight through nut-and-bolt flange connections. Suction and discharge flange shall be 125# ANSI drilling.

4. Wear Rings

a. 316SS impeller wear rings and nitronic 60 casing wear rings.

b. Installed with an anti-rotation device.

c. Designed to restrict leakage across the ring fit.

5. Bearings

a. Bearings shall be single row and double row deep groove ball type selected to carry radial and thrust loads.

b. Interchangeable inboard and outboard bearings shall be press fit and positioned onto ground journals on both ends of an accurately machined shaft.

c. Bearing housings shall be doweled and accurately positioned onto the bearing shoulders located on the lower half-casing to ensure accurate alignment.

d. Bearings for pumps motor size 40hp and less shall be grease lubricated. Bearing for pumps with motor size 50 hp and more shall be oil lubricated. Bearings shall be protected from contaminants by labyrinth bearing isolators.

e. Bearings shall be designed for an L10 life of 100,000 hours per AFBMA at best efficiency point.

f. Bearing RTD (100 Ohm Platinum) shall be installed on inboard and outboard bearings for pump with motor size of 50 hp and more.

6. Shaft

a. The pump shaft shall be manufactured of SAE-1045 or AISI 4140 steel and of such dimensions that the maximum combined stress due to bending and torsion shall not exceed 8,000 pounds per square inch under the most severe conditions of operation

b. Shaft shall be accurately machined along its entire length. A keyway shall be machined at the coupling end. No threads shall be machined adjacent to the impeller.

c. Shaft shall be of sufficient diameter to carry the maximum loads imposed on it, and to prevent vibration and fatigue.

7. Shaft Sleeves

a. Renewable straight shaft sleeve made of 316 SS designed to protect the shaft where it passes through the stuffing box.
b. O-ring furnished under sleeve to prevent leakage.

8. Mechanical Seal

a. Chesterton 442 split cartridge mechanical seal.

b. Solid sleeve type mechanical seals, as manufactured by John Crane Type 21 or approved equal, may be used for pumps 8-inch or smaller.

9. Nameplates

a. Stainless steel attached to the pump casing.

b. Include the pump manufacturers model number, serial number, rated capacity, rated head, shutoff head, speed and all other pertinent data.

10. Baseplate, Coupling and Guard

a. A structural steel base for pump and drive is to be supplied. Base shall be designed to resist torsional movement and support the combined weight of both pump and driver. Bases shall have machined mounting surfaces (level to .005" per foot) for both pump and motor feet. Mounting pads shall be minimum 1.5" thick. Bases shall be provided with horizontal motor alignment adjusting bolts and jacking bolts for base leveling.

b. After leveling and alignment, the base shall be grouted and completely filled with a non-shrinking grout.

c. Coupling for electric motor: Thomas DBZ coupling with stainless steel discs.

2.03 MOTOR

A. Comply with Section 16171 and the Pump Schedule in Part 3 of this section.

2.04 PAINTING

A. Apply prime coat and one finish coat of enamel to pumps, motors, base plates, appurtenances at factory.

B. Provide touch up paint kit.

2.05 SOURCE QUALITY CONTROL

A. Factory testing:

1. A certified factory hydrostatic and performance test shall be performed on each pumping unit in a manufacturer approved facility in accordance with Hydraulic Institute Standard ANSI 14.6, latest edition to the criteria specified herein.

   a. The test setup in the manufacturer's facility shall duplicate as closely as possible the inlet conditions in the proposed installation.

2. Tests shall be sufficient to determine the curves of head input horsepower, and efficiency relative to capacity from shutoff to a minimum 125% of design flow. A minimum of 10 points, including shutoff, shall be taken for each test, including not less than 4 points within ±8% of the Design Operating Point In addition,, one test point shall be sufficient to define head and power requirements at shutoff head.

3. Results of the performance tests shall be certified by a Registered Professional Engineer and submitted for approval before final shipment.

4. Failure to achieve guaranteed performance proposed in accepted submittal documents shall be cause for rejection.

5. Notify Owner at least two weeks prior to scheduled factory test date. Owner and/or Engineer may attend factory test at Owner's expense.

PART 3 EXECUTION

3.01 INSTALLATION

A. Install pumps in accordance with Contract Drawings and pump/motor manufacturer's instructions and recommendations.

B. Laser Align pump and motor before grouting base and before connecting piping. Recheck alignment before start-up. Alignment shall be per pump and coupling manufacturer's recommendations. Alignment reports shall be provided showing motor and pump shaft alignment within .002" angular and parallel alignment.

C. Do not put stress on pump suction and discharge flanges when installing piping. Support piping independent of pump.

D. Touch up paint as necessary after completion of installation.

3.02 FIELD QUALITY CONTROL

A. Notify Engineer prior to startup and allow him to witness initial operation.

B. Pump manufacturer's representative shall check and approve the installation before operation. He shall operate each pump and drive in the presence of owners' representative to verify that the pumps and installation conform to manufacturer's requirements. Vibration readings shall be taken on pumps and motors after start-up to ensure units comply with limits specified in this Section.

C. Provide an installation completion report prepared by the manufacturer's representative who inspected and adjusted the equipment. This report may be a letter or a form. It must be signed and dated by the manufacturer's representative. The report must indicate that installation has been satisfactorily completed in accordance with the manufacturer's instructions and is ready for operation. If that is not the case, the report must indicate what actions are needed to make the equipment ready for operation.

D. Retain the services of a representative of the manufacturer to instruct the plant staff in the proper operation and maintenance of the equipment. Pay for a minimum of 3 hours of instruction and associated materials for up to 6 persons. This training is to be conducted at the plant unless the instructor elects to do part of it in a city owned training room. Conduct this training during or after startup.

E. Check for proper direction of rotation by jogging motor.

F. Oil and/or lubricate per manufacturer's instructions.

3.03 DISINFECTION

A. Disinfect pump units together with connected piping system.

3.04 PUMP SCHEDULE

Horizontal Split Case Pumps				
Design Conditions	**Park Ten Central**		**Sharpstown #1**	
Location	Indoors	Indoors	Indoors	Indoors
Quantity	1	2	1	2
Fluid Pumped	Drinking Water	Drinking Water	Drinking Water	Drinking Water
Design Operating Point	500 gpm @ 150 ft	1,250 gpm @ 150 ft	500 gpm @ 150 ft	2,500 gpm @ 150 ft
Min. Eff. @ Design Operating Point	72%	80%	72%	80%
Max. Shutoff Head (ft)	180	185	180	180
Max. Motor Size	40 hp	100 hp	40 hp	150 hp
Max. Speed	1800	1800	1800	1800
Motor Enclosure	TEFC	TEFC	TEFC	TEFC
Power Supply	3/60/480 Volt	3/60/480 Volt	3/60/480 Volt	3/60/480 Volt
Motor Type	Constant Speed	Constant Speed	Constant Speed	Constant Speed
Pump/Motor Base	Structural Steel	Structural Steel	Structural Steel	Structural Steel

END OF SECTION

SECTION 11210

VERTICAL TURBINE PUMPS

PART 1 GENERAL

1.01 SUMMARY

A. Furnish, install, inspect, test, and place in satisfactory service vertical turbine pumps with motors, suction tanks and accessories as specified.

B. Refer to Section 16171 for requirements for electric motors.

1.02 MEASUREMENT AND PAYMENT

A. Payment for pumps is on a unit price basis for each. Payment includes labor, equipment, and material necessary for installation of the pump, motor, base, pump suction tank and accessories. Payment includes all necessary requirements from the manufacturer installation, start-up and testing procedure(s) for the pumps and motors.

1.03 SYSTEM DESCRIPTION

A. Design and Performance Requirements
1. Provide pumps that meet the operating requirements specified in the Pump Schedule in Part 3.
2. Adequately size motor so that each pump is non-overloading throughout entire pump performance curve.
3. Provide pumps and motors that are free from shock, vibration, cavitation, overheating, and noise while operating at specified conditions.
4. Pumps shall be of NSF-61 certified construction.

1.04 SUBMITTALS

A. General
1. Comply with the requirements of Section 01330 when preparing and making submittals described in this section.
2. Submit the product data and shop drawings specified below in a single package. Partial submittals will not be reviewed.
3. Submit data for motors in accordance with the requirements of Sections 16171 – Low Voltage Motors.

B. Product Data

Submit the following product data:

1. Catalog cuts describing pumps and electric motors. Mark through inapplicable information.

2. Pump Performance Curves:
   a. Show head, capacity, brake horsepower, and pump efficiency curves from shut-off to maximum capacity of pump.
   b. Show head, capacity, brake horsepower, and pump efficiency for points specified in Pump Schedule in Part 3.
   c. Speed versus torque.

3. Data sheets addressing all product features such as materials of construction, design features, factory coatings, and accessories specified in this section.
4. Data sheets providing weight of each pump with motor and maximum hydraulic downthrust (momentary and continuous)
5. Manufacturer's installation instructions.

C. Shop Drawings
   1. Submit shop drawings showing dimensions and layout of the pumps, and motors specified in this section.
   2. When using standard drawings, mark through inapplicable details and information.

D. Factory Tests
   1. Submit certified factory test results prior to shipment of equipment.
   2. Do not ship equipment until test results have been approved by the Engineer.

E. Manufacturer's operation and maintenance manuals in accordance with Section 01782.

1.05 QUALITY ASSURANCE

A. System responsibility: To ensure proper operation, pump manufacturer shall provide both the pumps and the motors.

B. Manufacturer's Certification:
   1. Submit Manufacturer's certification that the running amperes of the motor will not exceed the nameplate rating of the motor under all expected operating conditions.
   2. Submit Manufacturer's certification that spare parts, seals, bearing, o-rings and power cable shall be available locally for models to be supplied.

C. The pump manufacturer shall provide information to and assist the electrical subcontractor in coordinating all pump motor interfaces.

D. Vibration, when measured in the direction of maximum amplitude on the pump and motor bearing housings, shall not exceed 1.59-mils peak to peak displacement at a

maximum peak velocity of 0.1-inch per second at any speed within the specified operating speed range.

E. Pump(s) are to be engineered and manufactured under the certification of ISO-9001:2000.

1.06 PRODUCT DELIVERY, STORAGE AND HANDLING

A. Delivery
1. Deliver all components to site in manufacturer's shipping crates or boxes.
2. Provide flange covers.
3. Ship with bearings lubricated.

B. Storage
1. Store all components off ground.
2. Protect from the weather.

C. Handling
1. Handle all components in accordance with manufacturer's instructions to prevent damage.

PART 2 PRODUCTS

2.01 PUMPS

A. Manufacturers
1. Fairbanks Morse
2. ITT Goulds
3. Simflo Pumps
4. Approved equal

B. Design
1. Impeller
a. The impeller shall be made of 316 SS. They shall be of one-piece construction, single suction, and radial flow design. The waterways through the impeller shall have extremely smooth contours, devoid of sharp corners, so as to promote maximum efficiency.
b. The impeller is to be balanced and secured to the shaft by means of a stainless steel drive collet or a combination of a thrust washer, key and/or snap rings.
c. Impellers shall be adjustable by means of a top shaft-adjusting nut.

2. Bowls

a. The bowls shall be made of close-grained cast iron conforming to ASTM A48 CL30. Castings shall be free from blowholes, sand holes and shall be accurately machined and fitted to close dimensions.
b. Bowls 8" and above shall be flange connected. Bowls below 8" nominal diameter may use either flanged or threaded connections.
c. Bowls shall be designed with smooth passages to ensure efficient operation and their interior shall be coated with Tnemec N140 Pota-Pox Plus, or approved equal.
d. The casing shall be hydrostatically tested to 1.5 times the design head or 1.25 times the shutoff head whichever is greater.
e. Discharge and intermediate pump bearings shall be product lubricated.
f. Bottom bearings in the suction case of the bowl assembly shall be bronze B-905-932 and lubricate with a food grade product.

3. Impeller Shaft
   a. Impeller shaft shall be of stainless steel construction conforming to ASTM A582 (416 stainless steel).
   b. The shaft shall be supported by bronze or neoprene bearings located on both sides of each impeller.
   c. Impeller shaft coupling shall be of stainless steel construction conforming to ASTM A582 (416 stainless steel).

4. Wear Rings
   a. Wear rings shall be provided on both the impellers and bowls of nominal diameter of 8" or larger so that clearances can be maintained throughout the life of the rings and minimize recirculation. Bowls of 6" and 7" nominal diameter shall incorporate bowl wear rings only.
   b. Impeller wear rings shall be of the radial-type.
   c. Bowl wear rings shall be of the radial-type.
   d. Wear rings shall be attached to the impellers and bowls using an interference fit and Loctite.
   e. Wear rings shall be bronze conforming to ASTM, B505 C93200.

5. Column
   a. 316 SS bolting for bowl, column and head connections.
   b. Column pipe shall be flanged and furnished in interchangeable sections not over ten feet in length.

6. Lineshafts
   a. Lineshaft shall be of ample size to transmit the torque and operate the pump without distortion or vibration.
   b. Lineshaft shall be made of stainless steel conforming to AISI 1045 and be furnished in interchangeable sections not over ten feet in length.
   c. Lineshaft shall be coupled with extra-strong threaded steel couplings machined from solid bar steel.

d. Lineshaft shall be fitted with stainless steel replaceable sleeves at each bearing and shall be ASTM stainless steel A-582 grade 416 with chrome plating having a Brinnel hardness of not less 500,
e. Lineshaft bearings shall be product lubricated of bronze or neoprene material construction.
f. Lineshaft bearings shall be retained in bronze guides that are fitted into the column coupling and secured in place by the butted column pipe ends. (for column sizes larger than 16" retainers shall be steel and fabricated into the column assembly.

7. Discharge Head Assembly
   a. The pump discharge head shall be of the above ground type of fabricated steel construction with an ANSI 125# discharge flange. Cast iron construction is acceptable for head assembly sizes 8-inch and smaller.
   b. The discharge head shall be of sufficient design to support the entire weight of the pump and driver.
   c. If the application uses a variable frequency drive, the discharge head shall be fabricated steel and specifically designed to elevate the discharge head natural frequency above the operating speed.
   d. A drive shaft of the same material as the lineshaft shall extend through the sealing assembly of the discharge head and be coupled to a vertical hollow shaft driver.
   e. The shaft sealing assembly shall consist of a cast iron packing box, cast iron packing gland, bronze packing box bushing, stainless steel packing gland nuts and bolts, synthetic packing and a Teflon water seal ring.
   f. Packing box shall be rated for 175 PSI.
   g. Discharge head openings shall be fitted with guards to prevent access to the rotating shaft and/or coupling.

8. Vibration Limitations (Field)
   a. The limits of vibration as set forth in the standards of the Hydraulic Institute shall govern.

9. Suction Tank
   a. The pump suction tank shall be provided by the pump manufacturer.

2.02 MOTOR

A. Comply with Section 16171 – Low Voltage Motors and the Pump Schedule in Part 3 of this section.

B. Motor shall have anti-reverse ratchet assembly.

2.03 FACTORY APPLIED PROTECTIVE COATINGS

A. Exposed Surfaces above Base Plate
   1. Blast clean carbon steel and cast iron surfaces per SSPC SP-10, to near white finish.
   2. Prime with epoxy. Provide a minimum dry film thickness of 2 to 3 mils.
   3. Apply finish coat of enamel.
   4. Do not paint stainless steel or bronze surfaces.

B. Surfaces in Contact with Liquid Being Pumped
   1. Coat with epoxy with a minimum dry film thickness of 2 to 3 mils.
   2. Epoxy must comply with NSF 61.

2.04 SOURCE QUALITY CONTROL

A. Factory testing:

1. A certified factory hydrostatic and performance test shall be performed on each pumping unit in a manufacturer approved facility in accordance with Hydraulic Institute Standard ANSI 14.6, latest edition to the criteria specified herein.
   a. The test setup in the manufacturer's facility shall duplicate as closely as possible the inlet conditions in the proposed installation.
   b. Tests shall be sufficient to determine the curves of head input horsepower, and efficiency relative to capacity from shutoff to a minimum 125% of design flow. A minimum of 10 points, including shutoff, shall be taken for each test, including not less than 4 points within ±8% of the Design Operating Point In addition,, one test point shall be sufficient to define head and power requirements at shutoff head.
2. Results of the performance tests shall be certified by a Registered Professional Engineer and submitted for approval before final shipment.
3. Failure to achieve guaranteed performance proposed in accepted submittal documents shall be cause for rejection.
4. Notify Owner at least two weeks prior to scheduled factory test date. Owner and/or Engineer may attend factory test at Owner's expense.

PART 3 EXECUTION

3.01 INSTALLATION

A. Install equipment in accordance with the Drawings, approved shop drawings and the manufacturer's installation instructions.

B. Retain the services of one (1) startup engineer employed by the manufacturer to check the installation of the equipment and supervise performance of all necessary adjustments prior to initial operation. Pay for a minimum of one (1) man day on-site

work by this technician.

C. Lubricate equipment in accordance with the manufacturer's instructions prior to initial operation.

D. Make electrical connections in accordance with the approved shop drawings.

E. Touch up factory applied finishes using materials coatings by the equipment manufacturer.

F. Apply finish coatings to factory primed surfaces. Comply with the requirements of Section 09910 and the manufacturer's instructions.

3.02 STARTUP

A. Comply with manufacturer's instructions.

B. Make sure rotating elements are free before applying power.

C. Check motor rotation to be sure that it is correct.

D. Notify Engineer prior to startup and allow him to witness initial operation.

3.03 FIELD QUALITY CONTROL

A. Notify Engineer prior to startup and allow him to witness initial operation.

B. Pump manufacturer's representative shall check and approve the installation before operation. He shall operate each pump and drive in the presence of owners' representative to verify that the pumps and installation conform to requirements. Vibration readings shall be taken on pumps and motors after start-up to ensure units comply with limits specified in this Section.

C. Provide an installation completion report prepared by the manufacturer's representative who inspected and adjusted the equipment. This report may be a letter or a form. It must be signed and dated by the manufacturer's representative. The report must indicate that installation has been satisfactorily completed in accordance with the manufacturer's instructions and is ready for operation. If that is not the case, the report must indicate what actions are needed to make the equipment ready for operation.

D. Retain the services of a representative of the manufacturer to instruct the plant staff in the proper operation and maintenance of the equipment. Pay for a minimum of 3 hours of instruction and associated materials for up to 6 persons. This training is to be conducted at the plant unless the instructor elects to do part of it in a City owned training room. Conduct this training during or after startup.

D. Check for proper direction of rotation by jogging motor.

E. Oil and/or lubricate per manufacturer's instructions.

3.04 DISINFECTION

A. Disinfect pump units together with connected piping system.

3.04 PUMP SCHEDULE

Vertical Turbine Pumps			
Design Conditions	**District 111 #2**		**West Houston #3**
Location	Outdoors	Outdoors	Indoors
Quantity	2	1	3
Fluid Pumped	Drinking Water	Drinking Water	Drinking Water
Design Operating Point	500 gpm @ 150 ft	700 gpm @ 150 ft	950 gpm @ 150 ft
Min. Eff. @ Design Operating Point	80%	80%	80%
Max. Shutoff Head (ft)	190 ft	220 ft	250 ft
Max. Motor Size	30 hp	40 hp	50 hp
Max. Speed (rpm)	1800	1800	1800
Motor Enclosure	TEFC	TEFC	TEFC
Power Supply	3/60/480 Volt	3/60/480 Volt	3/60/480 Volt
Motor Type	Constant Speed	Constant Speed	Constant Speed
Pump/Motor Base	Cast Iron	Cast Iron	Cast Iron

END OF SECTION

SECTION 11250

POLYETHYLENE STORAGE TANK

PART 1 GENERAL

1.01 DESCRIPTION

A. The Contractor shall furnish materials, equipment, appurtenances, specialty items, and services required to provide a linear high density polyethylene storage tank as shown and specified in the Contract Documents.

B. This specification applies to any supplied chemical tank.

1.02 MEASUREMENT AND PAYMENT

A. No separate payment will be made under this section. Include payment in lump sum bid item for which the work is required, with price breakdown in the Schedule of Values.

1.03 QUALITY ASSURANCE / QUALITY CONTROL

A. Manufacturer's Qualifications: Manufacturer of the polyethylene tank shall have experience in providing similar type equipment and shall show evidence with his submittal of at least five (5) installations where equipment of the same material and design and similar application as specified herein have been in satisfactory operation for at least five (5) years.

B. Reference Standards:

1. The material employed in items fabricated of polyethylene shall be capable of withstanding maximum calculated stresses that may occur during fabrication, installation, and continuous operation, with allowance for an adequate safety factor. The Contractor shall provide a certification from the manufacturer that materials employed in items of fabrication of fiberglass reinforced plastic shall meet the materials testing requirements defined in the latest revisions of the following ASTM standards as applicable for each polyethylene tank to be furnished under this Section.

   a. ASTM D 638, Test for Tensile Properties of Plastics

   b. ASTM D 746, Test Method for Brittleness Temperature of Plastics and Elastomers by Impact

   c. ASTM D 790, Test for Flexural Properties of Plastic

d. ASTM D 883, Standard Nomenclature Relating to Plastics

e. ASTM D 1505, Test Method for Density of Plastics by the Density Gradient Technique

f. ASTM D 1525, Test Method for Vicat Softening Temperature of Plastics

g. ASTM D 1693, Test Method for Environmental Stress-Cracking of Ethylene Plastics

h. ASTM D 1998, Standard Specifications for Polyethylene Upright Storage Tanks

i. ASTM D 3892, Practice of Packaging/Packing of Plastics

2. ANSI Standards, B-16.5 Pipe Flanges and Flanged Fittings

1.04 SUBMITTALS

A. Shop Drawings:

1. Submit in accordance with Section 01300 for polyethylene tanks that detail:

a. dimensions of the tank

b. size, location, and orientation of all tank penetrations

c. size orientation of all tank accessories.

d. location of anchor lugs

2. Submit the following information:

a. Sufficient fabrication drawings and literature, to show dimensions, materials used, design features, internal construction and weights.

b. Shop drawings for the tanks shall include as a minimum the following:

1) Resin and materials of construction including thickness of each layer

2) Service conditions for chemical environment and temperature

3) A statement from the manufacturer that fabrication shall be in accordance with these Specifications

4) A statement from the manufacturer that the materials and resin used for each tank are designed to meet all requirements for the intended service as specified herein.

5) Tabulation in checklist form to indicate compliance with applicable ASTM standards for each tank and service condition.

6) Certifications and design calculations required by the specifications

7) Sizing and details of anchoring and tie-down systems for each tank for the service and load conditions specified herein.

8) Layouts and assembly schedules identifying the location and elevation from the bottom of the tank for all inlet, outlet, and other integrally molded connections, baffles and appurtenances specified herein and shown on the approved Shop Drawings.

9) Details of access ladders, and top access platforms and handrails for all tanks requiring top access with design calculations.

10) A certificate from resin manufacturer listing nomenclature, composition, and characteristics of the resin.

B. Factory Test Reports:

1. Each tank shall be given a hydrostatic test by the manufacturer before shipment.

2. Each tank shall be completely shop-fabricated and shall be shipped to the Point of Delivery as a single unit.

C. Installation Instructions

1. Submit with the delivery of the polyethylene tank detailed Installation Instructions.

D. Operation and Maintenance Manuals

1. Maintenance and troubleshooting guides shall be submitted for review in accordance with the procedures and requirements set forth in Section 01782, Operation and Maintenance Data.

E. Record Drawings – Not Used

F. Certificates Warranties and Guarantees

1. Certification of Design: The Certification of Design shall be signed by a Licensed Professional Engineer currently registered in the State of Texas. The Contractor shall provide with the submittals, a Certification of Design with calculations from the tank manufacturer verifying that:

   a. The polyethylene storage tank to be furnished under this Section meet the applicable ASTM and International Building Code 2006 (IBC) standards, and requirements specified herein for the conditions of service for each tank.

   b. The design of the tank and supports to be furnished under this Section meet the loading conditions, lateral restraint, and IBC 2006.

PART 2 PRODUCTS

2.01 ACCEPTABLE MANUFACTURERS

A. Raven

B. Ace Roto-Mold

C. Snyder Industries, Inc.

D. Approved equal

2.02 EQUIPMENT DESIGN AND FABRICATION

A. General

1. Configuration: One piece rotationally molded, vertical, cylindrical, flat bottom, closed top tank.

2. Tank volume shall include only that volume in the vessel below the overflow pipe invert elevation. Inclusion of volumes above the overflow pipe invert as additional capacity shall not be acceptable.

3. All storage tanks shall be designed for a concentrated top load of 250 pounds distributed over a 4 x 4 square inch area at the top of the tank.

4. Tanks and anchors shall be designed as prescribed in the IBC 2006. The design shall consider and shall meet these requirements for both full and empty tank conditions.

B. Equipment Design Requirements

1. Storage tanks shall comply with ASTM D 1998

2. Materials shall be Type II high density linear polyethylene resin by ExxonMobil Escorene HD-8600 or equal.

3. Polyethylene resin shall contain a minimum of UV 8 stabilizer as compounded by the resin manufacturer.

4. Tank wall thickness and specific gravity rating shall be calculated in accordance with ASTM D 1998.

5. Minimum properties of the material based on molded parts:

PROPERTY	ASTM	VALUE	UNITS
Density	D1505	59(0.938- 0.944)	#ft.3(gm/cc)
ESCR Thickness 125 mils F-50	D1693	1000	Hrs.
Tensile Strength	D638		
Ultimate 2"/min.	Type IV Spec.	2600	PSI
Elongation at break	D638		
2"/min.	Type IV Spec.	350	%
Vicat Softening Temp.	D1525	235	Deg. F
Brittleness Temp.	D746	-180	Deg. F
Flexural Modulus	D790	110,000	PSI

6. The finished tank surface, as commercially practical, shall be free of visual defects such as foreign inclusions, air bubbles, pinholes, and cracking that will impair serviceability of the tank.

7. All dimensions shall be taken with the tank empty.

8. The tolerance for the outside diameter including out of roundness shall be +/-3%.

9. The tolerance for shell wall and head thickness shall be +/- 20% of the design thickness.

1. Flanged Nozzles:

   a. All nozzles shall be fabricated by the vessel manufacturer and be of hand lay-up construction with the pipe stub molded integrally with the pipe flange, constructed in conformance with requirements of the referenced standard.

   b. Flanged Nozzles: Polyethylene gussetted, flat face, conforming to ANSI B16.5 150-pound drilling. Flanges shall be contact molded to the tank wall with inside and outside layups as required and shall be located and oriented as shown on the approved shop drawing submittal. The

Contractor shall be responsible for the flanged nozzle coordination to ensure that the flange positions and orientations shall be per specific tank locations, and that all tank connections shall match the installation requirements according to specific site locations and positions. All nozzles must protrude sufficiently to allow clear distance between the back of the tank flange and the outer surface of the tank (5-inch minimum) to allow access to flange bolts. Threaded (NPT) coupling tank penetrations are not permitted.

c. Pump suction nozzles on tanks shall be flanged and shall be of the sizes and locations shown on the approved shop drawings and of the full drain type with centerline of the nozzle positioned at the elevation of the tank bottom. If a flat bottom tank is provided, the tank concrete pad shall be notched as required by the manufacturer to accommodate the full drain flanged nozzle.

d. Drain nozzles shall be flanged and of the sizes and locations shown on the approved shop drawings. The nozzles shall be the full drain type with centerline of the nozzle positioned at the elevation of the tank bottom. If a flat bottom tank is provided, the tank concrete pad shall be notched as required to accommodate the tank drain nozzles.

e. Top of overflow pipes shall be located 3 inches below the top seam line separating the dished top from the vertical side walls. Overflow connections shall be flanged and shall be positioned as shown on the approved shop drawings. Pipe supports shall be polyethylene as required and shall be laminated or resin bonded to the tank's exterior wall.

f. Each storage tank shall be furnished with a top gooseneck vent, Schedule 80 CPVC, connected to the top mounted, flanged nozzle with 6-inch minimum flange protrusion. The vent shall be of the size and location as shown on the approved shop drawings.

g. If required, each tank shall be furnished with a side mounted flanged connection for a level transducer positioned 4 inches above the bottom of the tank. The flange connection shall be of the size and orientation as shown on the approved shop drawings

2. Manways

a. Top entry Manways shall be Fabricator's standard vapor-tight flanged and bolted manway. Manway cover shall be 24 inches in diameter and of the same material as the tank and shall be installed with all Type 316L stainless steel hardware, including nuts, washers, bolts, and with 1/8-inch thick 40-60 durometer gasket material chemically resistant to contained fluid.

3. Level Gauges:

   a. Each tank shall be furnished with 1-inch level gauge via 1-inch flanged tank sidewall connections (top and bottom).

   b. Acceptable manufacturers: Ashcroft , or approved equal.

   c. Top level gauge flange connection shall be located 3 inches below the seam line separating the dished top from the vertical side walls. Bottom level gauge flange connection shall be positioned 3 inches above the bottom of the tank.

   d. The level gauge shall be furnished with a vent plug and a 1/2-inch drain CPVC isolation valve.

   e. The level gauges shall be supported from the tank by a polyethylene bracket laminated or resin bonded to the tank wall.

4. Lifting Lugs: Lifting lugs shall be capable of withstanding weight of empty tank with safety factor of 5 to 1. Provide a minimum of four (4) lifting lugs on all storage tanks. Lifting lugs shall be Type 316L stainless steel and attached to tank wall with hand-layed up laminate equal to or greater than the tank wall thickness.

5. Tie-down Ring/Mounting Lugs:

   a. Vessel housing shall be designed for full bottom support and shall be provided with a minimum of four (4) Type 316L stainless steel hold down lugs.

   b. Tank housing and base shall be designed with ample supports so that the whole assembly shall be self-supporting in any operation condition and in accordance with all external loading specified herein.

2.03 ACCESSORIES

A. Access Ladder: - Not Required

B. Fall Prevention System – Not Required:

C. Access Platform and Handrail – Not Required:

D. Identification:

1. Label: Permanently attach either Type 316 stainless steel or fiberglass label to each tank at an elevation 5 feet above the tank support pad with the following minimum information:

   a. Chemical to be stored:

   b. Type of liner reinforcement

   c. Corrosion-resistant surface veil

   d. Resin

   e. Tank capacity

   f. Date of manufacture

   g. Manufacturer Name and Contact Information

PART 3 EXECUTION

3.01 FIELD INSPECTION

A. Tank opening sizes and locations shall be approved by the Engineer and Owner prior to fabrication of tanks.

B. All nozzle cutouts are to be marked for location of origin, and shipped with the respective tank. At the manufacturer's discretion, a representative sample may be sent to the Engineer for inspection following removal from the mandrel, to assure that the liner and structural thicknesses will be judged as adequate prior to further manufacturing efforts.

3.02 INSTALLATION

A. Polyethylene tanks will be installed by the Contractor as shown on the approved shop drawings and as recommended by the manufacturer's representative.

B. The tank equipment pad shall receive several layers (as required by the manufacturer) of 30-pound roofing felt equal in diameter to the outside diameter of the tank plus 2 inches to resist uneven loadings on the tank and anchor system.

SCHEDULE 1 OF 1
TO SECTION 11250
POLYETHYLENE STORAGE TANKS

Service	Quantity	Size
Liquid Ammonium Sulfate	1	550 gal

END OF SECTION

SECTION 11260

CHLORINATION SYSTEM

PART 1 GENERAL

1.01 SUMMARY

A. Furnish, install, test, and place in satisfactory working condition the chlorine application system specified in this section and shown on the drawings.

1.02 MEASUREMENT AND PAYMENT

A. Payment for chlorination system is on a lump sum basis. Payment includes labor, equipment, and materials for installation of the chlorination system and all components under this section.

1.03 SYSTEM DESCRIPTION

A. General
1. The proposed chlorination system will be used to chlorinate and disinfect the water supply prior to entering the ground storage tank.

B. Proposed system shall include:
1. One dual cylinder scale;
2. One flow pacing controller with flow meter on a wall panel;
3. Two automatic switchover vacuum regulator gas feeders (chlorinator) for direct mounting on 150 lb cylinders;
4. One ejector check valve;
5. Piping and valves;
6. One pressure gage on water supply;
7. Dual channel chlorine gas leak detector.

C. Performance requirements:
1. Maximum feed rate: 100 lbs/24 hours

1.04 SUBMITTALS

A. General
1. Comply with the requirements of Section 01330 when preparing and making submittals described in this section.
2. Submit the product data and shop drawings specified below in a single package. Partial submittals will not be reviewed.

B. Product Data
   1. Submit the following product data:
      a. Catalog cuts describing equipment specified in this section and control equipment supplied with same. Mark through inapplicable information;
      b. Data sheets addressing all performance requirements specified in this section;
      c. Data sheets addressing all product features such as materials of construction, design features, factory coatings, and accessories specified in this section; and
      d. Manufacturer's installation instructions.

C. Shop Drawings
   1. Submit shop drawings illustrating and detailing the design and installation of the equipment specified in this section. Include:
      a. Isometric piping diagrams;
      b. Pictorial elevations; and
      c. Support and anchoring details.
   2. Indicate piping and equipment sizes.
   3. Indicate piping materials types and schedules and indicated valve types and materials.
   4. When using standard drawings mark through inapplicable details and information.

D. Operation and Maintenance (O & M) Data
   1. Comply with the requirements of Section 01782.

1.04 QUALITY ASSURANCE

A. Obtain all items specified herein from a single source to ensure that all components are compatible and work together to form a properly functioning system.

B. Comply with the requirements of the following standards and regulations:
   1. The regulations of the Texas Commission on Environmental Quality (TCEQ) pertinent to public water systems (30 TAC 290).
   2. The standards of the Chlorine Institute.
   3. The National Electric Code

PART 2 PRODUCTS

2.01 MANUFACTURERS

A. Eagle Microsystems

B. Chemical Injection Technologies

C. Approved equal

2.02 CHLORINE CYLINDER SCALES

A. Dual Cylinder Scale
1. The floor mounted dual cylinder electronic scale shall be Eagle Microsystems Model DCS302 or approved equal.
2. The scale shall be furnished with a remote mount dual channel electronic indicator and cable, Eagle Microsystems Model EI-2000 or approved equal.
3. The scale base shall be corrosion resistant and suitable for weighing two 12-inch diameter compressed gas cylinders.
4. Scale to read directly and continuously the pounds remaining in each cylinder via dual digital LED displays. Net weight to be adjustable through tare weight adjustment touch pad.
5. Scale accuracy +/- 0.5% of full scale.
6. Low weight alarm contacts with a 4-20 mA transmitter.
7. All scale electronics shall be enclosed in a NEMA 4X enclosure.
8. Power supply shall be 120 VAC, 60 Hz.

2.03 VACUUM REGULATOR (AUTOMATIC SWITCHOVER)

A. Direct cylinder mounted vacuum regulator with flow meter assembly as manufactured by Superior Model VR-16 or approved equal.

B. Feed range capacity: 100 lbs/24 hours.

C. Vacuum regulator body shall be fiberglass reinforced ABS plastic. All other materials of construction shall be as recommended the manufacturer and suitable for chlorine gas service.

D. A fluoroplastic filter assembly shall be installed on each regulator.

E. Vacuum regulator shall be equipped with a built-in automatic switchover function.

2.04 GAS FEEDER

A. 100 lb. per 24 hour maximum capacity.

B. Visible flow indication.

C. Automatic safety features to prevent escape of gas in event of:
1. loss of vacuum;

2. failure of water supply;
3. blockage of solution line; and
4. breakage of any part of vacuum system.

D. Each feed point shall include a flow pacing controller on a wall panel including rotometer and vacuum gauge as manufactured by Superior, Series 2000 Autovalve.

2.05 EJECTOR

A. The ejector assembly shall prevent water from entering the gas system, and shall be capable of withstanding water pressure up to 300 psig.

B. Back pressure at point of injection: 10 psi

C. Potable water supply pressure: 60psi

2.06 CHLORINE SOLUTION DIFFUSER

A. Corp stop diffuser chemical solution main connection to diffuse chlorine solution into pipe water main, as manufactured by Primary Fluid Systems model CS.

B. 1" male NPT threads.

2.07 CHLORINE ANALYZER

A. Wall mounted total chlorine analyzer system, including sensor, in-line probe housing and accessories.

B. Single variable controller.

C. 115 VAC, 50/60 Hz, single phase

D. Model: Prominent D1Cb

2.08 BOOSTER PUMP

A. High head centrifugal booster pump, J Series model JHF as manufactured by Sta-Rite.

B. Pump body and seal plate shall be cast iron supported by a steel base.

C. Noryl impeller and 416 stainless steel shaft.

D. 1.5 HP, 115 VAC, 50/60 Hz, single phase.

2.09 PIPING AND VALVES

A. Piping
1. Schedule 80 PVC piping and fittings rated for a minimum pressure of 400 psig at 73 degrees F.
2. Solvent weld socket type joints.
3. Threaded joints at transitions to equipment with teflon tape jointing material.

B. Valves
1. Ball Valves – Hayward Tru-union PVC Ball Valves, Viton fitted, or approved equal.
2. Ball Check Valves – Hayward Tru-union PVC Ball Check Valves, Viton fitted, or approved equal.
3. Diaphragm Check Valves – Plast-O-Matic Series CKM, Viton diaphragm, or approved equal.
4. Solenoid Valves – ASCO Model 8210G4MO, normally closed brass solenoid valves, or approved equal.

C. Water Pressure Gauges – Ametek, 3-1/2", rated 0-160 psi

D. Pipe Clamps – Grinnel split clamp type, Model 138R with Model 128R bases and 3/8" cadmium plated all thread rod.

2.10 GAS LEAK DETECTOR

A. The chlorine gas detector shall consist of a microprocessor-based indicator and alarm unit with a remotely mounted gas sensor and interconnecting cable. Analytical Technology Model B14 Alarm System with Model B12 Sensor Transmitter or approved equal.

B. The gas sensor shall be of the electrochemical type and mounted in a NEMA 4X enclosure. The sensor shall be capable of responding to chlorine gas levels from 0.1 to 20.0 ppm. The sensor enclosure shall be equipped with an LED display to remotely indicate the concentration of any gas detected.

C. The alarm indicating unit shall be housed in a NEMA 4X enclosure with pushbutton controls and an LCD display. The display shall register the gas concentration and digitally display the measured gas concentration on a 4 digit LED programmable display. An isolated 4-20 mA DC output signal, 1000 ohm max load. shall be provided proportional to the full scale calibrated range. Programmable relays shall be provided for actuation of the alarms for critical or dangerous conditions. The alarm unit shall have three LED alarm bar indicators, one each for caution, warning

and alarm. The alarm unit shall also feature 3 assignable relays.

D. The unit shall operate from a 120 VAC 50/60 Hz single phase power supply. The alarm unit shall be provided with an battery back-up and Alarm horn.

E. Furnish calibration adapter and ATi Puffer gas generator for calibration purposes.

PART 3 EXECUTION

3.01 INSTALLATION

A. Install all equipment specified in this section, except for diffuser inside proposed Chlorine Room.
Install diffuser in well discharge line as shown on Drawings.

B. Install equipment in accordance with the Drawings, approved shop drawings and the manufacturer's installation instructions.

C. Use Schedule 80 PVC pipe for potable water and chlorine solution service.

D. Use polyethylene tubing for chlorine gas service.

E. Anchor and support all piping in accordance with approved shop drawings.

F. Retain the services of a technician employed by the manufacturer to check the installation of the equipment and make all necessary adjustments prior to initial operation.

3.02 FIELD QUALITY CONTROL

A. Provide an installation completion report prepared by the technician who inspected and adjusted the equipment. This report may be a letter or a form. It must be signed and dated by the manufacturer's technician. The report must indicate that installation has been satisfactorily completed in accordance with the manufacturer's instructions and is ready for operation. If that is not the case, the report must indicate what actions are needed to make the equipment ready for operation.

END OF SECTION

SECTION 11280

LAS CHEMICAL FEED SYSTEM

PART 1 GENERAL

1.01 SUMMARY

A. Furnish, install, test, and place in satisfactory working condition the wall mounted automatic liquid vacuum chemical feed system for LAS (liquid ammonium sulfate) including all necessary piping, valves, fittings, supports, electrical controls and accessories as specified in this section and shown on the Drawings.

1.02 MEASUREMENT AND PAYMENT

A. No separate payment will be made under this section. Include payment in lump sum bid item for which the work is required, with price breakdown in the Schedule of Values

1.03 SYSTEM DESCRIPTION

A. General
1. The proposed wall mounted LAS feed system will be used to form chloramines in the water supply prior to entering the ground storage tank.

B. The system shall include:
1. Vacuum regulator;
2. Automatic flow controller with flow meter on a wall panel;
3. Ejector check valve;
4. Secondary check valve;
5. Piping, valves and fittings;
6. Pressure gage on water supply;
7. Calibration column;
8. Booster pump

C. Performance requirements:
1. Maximum feed rate: 5 gallons/hour

1.04 SUBMITTALS

A. General
1. Comply with the requirements of Section 01330 when preparing and making submittals described in this section.

2. Submit the product data and shop drawings specified below in a single package. Partial submittals will not be reviewed.

B. Product Data
1. Submit the following product data:
   a. Catalog cuts describing equipment specified in this section and control equipment supplied with same. Mark through inapplicable information;
   b. Data sheets addressing all performance requirements specified in this section;
   c. Data sheets addressing all product features such as materials of construction, design features, factory coatings, and accessories specified in this section; and
   d. Manufacturer's installation instructions.

C. Shop Drawings
1. Submit shop drawings illustrating and detailing the design and installation of the equipment specified in this section. Include:
   a. Isometric piping diagrams;
   b. Pictorial elevations; and
   c. Support and anchoring details.
2. Indicate piping and equipment sizes.
3. Indicate piping materials types and schedules and indicated valve types and materials.
4. When using standard drawings mark through inapplicable details and information.

D. Operation and Maintenance (O & M) Data
1. Comply with the requirements of Section 01782.

1.04 QUALITY ASSURANCE

A. Obtain all items specified herein from a single source to ensure that all components are compatible and work together to form a properly functioning system.

B. Comply with the requirements of the following standards and regulations:
1. The regulations of the Texas Commission on Environmental Quality (TCEQ) pertinent to public water systems (30 TAC 290).
2. The standards of the Chlorine Institute.
3. The National Electric Code

PART 2 PRODUCTS

2.01 MANUFACTURERS

A. Chemical Injection Technologies

B. Approved equal

2.02 LIQUID VACUUM CHEMICAL FEED SYSTEM

A. The automatic liquid vacuum chemical feed system shall be Superior VacuFeed with AutoValve, Model AV-VF-1NH or approved equal.

B. The feed system shall have a capacity of 5 gallons per hour.

C. The system shall be supplied as a modular, wall mounted design, comprised of a vacuum regulator, flow meter/rate control valve panel, ejector assembly, secondary check valve, and pressure relief/drain valve.

D. Each component shall be capable of being individually removed for maintenance or service, without removing the entire system.

E. The ejector assembly shall prevent water from entering the feed system, and shall be capable of withstanding water pressure up to 300 psig.

F. All components of the system shall be constructed of materials compatible with aqueous ammonia.

2.03 LAS SOLUTION DIFFUSER

A. Corp stop diffuser chemical solution main connection to diffuse ammonia solution into pipe water main, as manufactured by Primary Fluid Systems model CS or approved equal.

B. 1" male NPT threads.

2.04 BOOSTER PUMP

A. High head centrifugal booster pump, J Series model JHF as manufactured by Sta-Rite, or approved equal.

B. Pump body and seal plate shall be cast iron supported by a steel base.

C. Noryl impeller and 416 stainless steel shaft.

D. 1.5 HP, 115 VAC, 50/60 Hz, single phase.

2.05 PIPING AND VALVES

A. Piping
1. Schedule 80 PVC piping and fittings rated for a minimum pressure of 400 psig at 73 degrees F.
2. Solvent weld socket type joints.
3. Threaded joints at transitions to equipment with teflon tape jointing material.

B. Valves
1. Ball Valves – Hayward Tru-union PVC Ball Valves, Viton fitted, or approved equal.
2. Ball Check Valves – Hayward Tru-union PVC Ball Check Valves, Viton fitted, or approved equal.
3. Diaphragm Check Valves – Plast-O-Matic Series CKM, Viton diaphragm, or approved equal.
4. Solenoid Valves – ASCO Model 8210G4MO, normally closed brass solenoid valves, or approved equal.

C. Water Pressure Gauges – Ametek, 3-1/2", rated 0-160 psi

D. Pipe Clamps – Grinnel split clamp type, Model 138R with Model 128R bases and 3/8" cadmium plated all thread rod.

PART 3 EXECUTION

3.01 INSTALLATION

A. Install equipment in accordance with the Drawings, approved shop drawings and the manufacturer's installation instructions.

B. Use Schedule 80 PVC pipe for potable water and LAS solution service.

C. Anchor and support all piping in accordance with approved shop drawings.

D. Retain the services of a technician employed by the manufacturer to check the installation of the equipment and make all necessary adjustments prior to initial operation.

3.02 FIELD QUALITY CONTROL

A. Provide an installation completion report prepared by the technician who inspected and adjusted the equipment. This report may be a letter or a form. It must be signed and dated by the manufacturer's technician. The report must indicate that installation

has been satisfactorily completed in accordance with the manufacturer's instructions and is ready for operation. If that is not the case, the report must indicate what actions are needed to make the equipment ready for operation.

END OF SECTION

SECTION 13120

PRECAST SEGMENTAL CONCRETE BUILDINGS

PART 1 GENERAL

1.01 SUMMARY

A. Contractor to furnish precast, post-tensioned concrete building. Building to be field erected on a cast-in-place concrete foundation in accordance with manufacturer's recommendations. Precast building to be EASI-SET brand as manufactured by Lonestar Prestress Mfg., Inc., Houston, Texas or approved equal. Building to be provided by manufacturer with all necessary openings as specified in conformance with manufacturer's structural requirements.

1.02 PAYMENT

A. Payment for precast concrete buildings is on a lump sum basis for each site. Payment includes labor, equipment, and materials for installation of the building and all components under this section.

1.03 RELATED WORK

A. Division 16 – Electrical: Precast building shall comply with all requirements of Division 16 for conduit, wiring, labeling, devices, and grounding.

1.04 CODES, STANDARDS, AND REFERENCES

A. ACI-318-02, "Building Code Requirements for Structural Concrete".

B. ASCE-7-02, "Minimum Design Loads for Buildings and Other Structures".

C. 2003 IBC, "2003 International Building Code".

D. PCI Design Handbook, Precast/Prestressed Concrete Institute.

E. UL 752, Standard for Safety for Bullet Resisting Equipment, Underwriters Laboratories Inc.

F. "Manual of Standard Practice", Concrete Reinforcing Institute.

G. ASTM, American Society for Testing and Materials:

1. C150 - Standard Spec. for Type I and Type II – Low Alkali Portland Cement.

2. C33 - Standard Spec. for Concrete Aggregates.

3. A36 - Standard Spec. for Carbon Structural Steel.

4. A615 - Standard Spec. for Deformed and Plain Billet-Steel Bars for Concrete Reinforcement.

5. A706 - Standard Spec. for Low-Alloy Steel Deformed and Plain Bars for Concrete Reinforcement.

6. A416 - Standard Spec. for Steel Strand, Uncoated Seven-Wire for Prestressed Concrete.

7. A185 - Standard Spec. for Steel Welded Wire Fabric, Plain, for Concrete Reinforcement.

8. A307 - Standard Spec. for Carbon Steel Bolts and Studs, 60,000 PSI Tensile Strength.

9. A123 - Standard Spec. for Zinc (Hot-Dip Galvanized) Coatings on Iron and Steel Products.

10. A153 - Standard Spec. for Zinc Coating (Hot-Dip) on Iron and Steel Hardware.

1.05 QUALITY ASSURANCE

A. Building fabricator must have a minimum of 5 years experience manufacturing precast, post-tensioned concrete buildings.

B. No alternate building designs to the pre-engineered EASI-SET building will be allowed unless pre- approved by the owner TEN (10) days prior to the bid date.

1.06 DESIGN REQUIREMENTS

A. Dimensions: Building plan dimensions are shown on the Drawings. Buildings shall have 12'-0" clear inside headroom, unless shown differently on the drawings.

B. Standard Design Loads:

1. Standard Wind Loading - 140 MPH (ASCE 7-02, Category II, Exposure C, Enclosed Building)

2. Standard Roof Live Load - 60 PSF

3. Standard Floor Live Load - 250 PSF

4. Seismic Design category 'D', Seismic use Group I

C. Roof: Roof panel shall slope 6" in 10'-0" in the direction of the narrow dimension from peak to edge. The roof shall extend a minimum of 4" beyond the wall panel on each side and have a turndown design which extends 3/4" below the top edge of the wall panels to prevent water migration into the building along top of wall panels. Roof shall also have a straight smooth edge.

D. Keyway Roof Joints: Grout in keyway shall be polymer concrete placed after coating keyway with a methyl methacrylate resin and isocyanate resin.

E. Floor: There shall be a 1/2" deep recess, the width of the wall panels, cast into the floor. The 1/2" recess makes the interior floor surface 1/2" higher than the joint between the wall panel and floor slab preventing intrusion of water.

F. Wall panels shall set on top of floor slab. Wall panels are to be a minimum of 6.5" thick.

G. Walls to be of an insulated precast concrete sandwich panel type. The walls shall have an extruded polystyrene core sandwiched between interior and exterior concrete wythes. The wall panels shall have a minimum thickness of 6.5". Minimum wythe thickness shall be 2". The walls shall have a minimum equivalent wood framed wall R-value of R-26 per the 2003 International Energy Conservation Code.

1.07 SUBMITTALS

A. Make submittals in accordance with Section 01330 - Submittal Procedures, and Section 01340 - Shop Drawings, Product Data, and Samples.

B. The submittal shall contain building engineering calculations that are to be designed and sealed by a Professional Engineer licensed in the state of Texas.

C. Summary of design criteria used in the building design including, as a minimum, material properties, loading, and dimensions assumed.

D. Shop drawings containing as a minimum of the following information:

1. Elevations of all four sides of the building as well as plans for the roof and floor. The drawings shall contain critical dimensions required to fully describe the structure as well as allow for accurate field erection. Drawings shall be to scale providing a proportionally accurate representation of the structure.

2. Plan and section drawings showing interior precast concrete partitions (if required).

3. Connection details and pertinent dimensions.

4. Proposed 28-day concrete compressive strength.

E. Product data information sheets including but not limited to:

1. Doors, Door frames, and door hardware including handles/doorknobs, hinges, locks, overhead stops and holders, thresholds and closer, etc. All door finish hardware shall be in compliance with ADA requirements.

2. Interior finish items: fiber reinforced plastic and accessories, base, floor tile, etc.

F. Samples: Samples showing color and texture of the following materials shall be submitted for: fiber reinforced plastic, base material, floor tile, epoxy coating.

PART 2 PRODUCTS

2.01 MATERIALS

A. Concrete:

1. Concrete shall have 6,000-psi minimum, 28-day compressive strength.

2. Cement used in the manufacture of concrete shall be Low Alkali Type I/II Portland Cement conforming to the requirements of ASTM C150 with total alkalis not to exceed 0.6%.

3. Coarse aggregate shall be crushed limestone with a maximum size per ASTM C33 of 3/4".

B. Reinforcing Steel shall be in accordance with requirements of ASTM A615, grade

60 for deformed bars and ASTM 185, grade 80 for welded wire fabric unless otherwise indicated.

C. Post-tensioning strand shall be ½" diameter, grade 270, 7-wire, low relaxation strand:

1. Plain
2. Encased in greased plastic sheathing (ASTM A416).

3. If post-tensioning is *not* used in the roof panel, the following guidelines must be followed to ensure a watertight roof design.

   a. The entire precast concrete roof panel surface must be cleaned and primed with a material that prepares the concrete surface for proper adherence to the coating material.

   b. The entire precast concrete roof panel surface shall be sealed with a .045" EPDM continuous membrane cemented to the concrete with a compound designed for this purpose.

D. Lifting Hardware: The lifting hardware to shall be permanently cast into the concrete and shall be hot dipped galvanized.

E. Caulking: All joints between panels shall be caulked on the exterior and interior surface of the joints. Caulking shall be SIKAFLEX-IA elastic sealant or equal. Exterior caulk joint to be 3/8" x 3/8" square so that sides of joint are parallel for correct caulk adhesion. Back of joint to be taped with bond breaking tape to ensure adhesion of caulk to parallel sides of joint and not the back.

F. Panel Connections: All panels shall be securely bolted together with 3/8" thick steel brackets. Steel is to be of structural quality, hot-rolled carbon complying with ASTM A36 and hot dipped galvanized after fabrication. All fasteners to be 1/2" diameter bolts complying with ASTM A307 for low-carbon steel bolts. Cast-in anchors used for panel connections to be Dayton-Superior #F-63, or equal. All inserts for corner connections must be secured directly to form before casting panels. Floating of connection inserts will not be allowed.

2.02 ACCESSORIES

A. Door and Frame: Shall comply with Steel Door Institute "Recommended Specifications for Standard Steel Doors and Frames" (SDI-l00), and as herein specified. The buildings shall be equipped with 18-gauge steel doors, with insulated core and hot-dip galvanized as listed in the schedule below. Doors shall open as noted on drawings. Frames shall be 16-gauge hot-dip galvanized steel. Doors and

frames shall be painted with one coat of rust inhibitor primer and one finish coat of epoxy paint, medium gray, if no other color is specified.

Site Building	Single Door	Double Doors	Rollup Door
Park Ten Central Electrical	1 @ 3'-0"x7'-6"	1 @ 8'-0"x9'-0"	n/a
Sharpstown #1 Pump/Electrical	6 @ 3'-6"-x8'-0"	1 @ 8'-0"x9'-0"	1 @ 10'-0"x10'-0"
West Houston #3 LAS Feed	1 @ 3'-0"x7'-6"	n/a	n/a

B. Door Hardware:

1. Handle: Lindstrum lever type pull-handle, stainless steel, 8-1/2" x 2".

2. Lockset: City of Houston standard unit.

3. Deadbolt: City of Houston standard unit.

4. Hinges: Hagar stainless steel five knuckle ball bearing with non-removable pins or equal.

5. Threshold: Hagar or National Guard Products extruded aluminum with neoprene seal or equal.

6. Overhead Door Holder: Yale surface mounted overhead slide type with safety release or equal.

7. Drip Cap: Hager or National Guard Products aluminum with stainless steel screws or equal.

8. Door Closer: Norton 7500 or Yale 4410 with hold open or equal.

9. Surface Bolts (Upper and Lower): Magnokrom Inc. 400-401 cadmium plated finish or equal, as required for double doors.

10. Astragal: Galvanized steel, same finish and brand as door, as required for double doors. Astragal shall be removable for equipment access.

11. Door Stop: Ives 445B26D brushed chrome (inactive leaf only) or equal, as required for double doors.

12. PANIC BARS: All doors shall be equipped with panic bars which open

doors when pressure is applied to a horizontal bar on the inside of each door.

B. Air Conditioning Unit: Two-ton wall mount HVAC Unit (BARD or equal) including supply and return air grills and temperature controller. Provide two units each building. See Project HVAC Drawings for additional information.

C. Electrical: The electrical work and materials shall conform to Division 16.

2.04 FINISHES

A. Building Exterior

1. Exposed Aggregate: The exterior finish of the building shall consist of washed brown firestone aggregate on all exterior wall surfaces with the exception of a 4" wide vertical smooth concrete reveal at the building corners. Aggregate must be seeded into top of panel while in form, chemically retarded, and high-pressure water washed to expose the aggregate to a depth of 1/8".

B. Interior of Building: Smooth steel form finish on all interior panel surfaces.

1. The building floor shall be treated with a Sealer/Dustproofer per the manufacturer's recommendations.

2. The walls and ceiling inside the building shall be painted with a minimum of two coats of white paint.

3. Electrical: The electrical work and materials shall conform to Division 16.

PART 3 EXECUTION

3.01 SITE PREPARATION REQUIREMENTS (Cast-In-Place Foundation)

A. The precast, post-tensioned concrete building shall be erected on a cast-in-place concrete foundation. The foundation shall be constructed in accordance with the Contract Drawings.

B. The floor shall have a 1 1/2" x 10" deep recess, the width of the wall plus 3 1/2" wide cast into the floor around the perimeter except at doors. The 1 1/2" recess makes the interior floor surface 1 1/2" higher than the joint between the wall panel and the foundation preventing intrusion of water.

C. The finished floor slab elevation shall be above the exterior grade. The grade shall

have a slope such that all drainage will be away from the building at all points.

D. The slab shall be steel reinforced and be level within 1/8" in both directions.

E. Footer depth and reinforcement to be in accordance with Contract Drawings.

3.02 ACCESS

A. Access to the building sites is indicated on the Contract Drawings.

3.03 ERECTION

A. The building manufacturer shall erect the building walls and roof.

3.04 AIR CONDITIONING UNITS

A. The building manufacturer shall install and commission the air conditioning units.

END OF SECTION

Section 13300

PROCESS INSTRUMENTATION AND CONTROLS – GENERAL PROVISIONS

PART 1: GENERAL

1.01 SCOPE OF WORK

A. A pre-approved Process Control System Integrator (PCSI) shall furnish all services and equipment defined herein and in other specification sections as listed in Paragraph 1.03, Related Work. The PCSI shall invite City personnel to all tests. City personnel shall be notified of all test 7 days in advance of tests.

B. All materials, equipment, labor, and services required to achieve a fully configured integrated and operational process control system shall be provided. The PCSI shall design and coordinate the process control system for proper operation with related equipment and materials furnished by other suppliers under other sections of these specifications and with related existing equipment. Application software programming for the Programmable Logic Controller (PLC) System and programming/graphics development for the HMI shall be performed by the Software Engineer (SE) as addressed in Specification 13441. Programming, configuration, and integration, including but not limited to Ethernet configuration and communications between all field I/O and PLC communications shall also be provided by the SE. In addition, the SE shall be responsible for providing all third party software/PLC code required to establish communication with the supplied hardware. It shall be understood that when the PCSI is directed in this specification to provide any of the services reserved in this paragraph for the SE, the SE and not the PCSI shall provide those services. If the PCSI is qualify as Software Engineer (SE) in accordance with specication 13441. The PCSI then can performs the SE services.

C. All configuration, integration, including but not limited to: loading of all software on computers, network equipment configuration, Ethernet configuration, and communications between servers and RTUs shall be provided by the SE. All programming of RTUs and HMI shall be by the SE. The PCSI shall furnish the operating system software and the application software.

D. Auxiliary and accessory devices necessary for system operation or performance to interface with existing equipment or equipment provided by other suppliers under other sections of these specifications, shall be included whether or not they are shown on the drawings. These devices include, but are not limited to, transducers, current isolators, signal conditioners, interposing relays, power supplies, and fiber optic transceivers.

E. Substitution of functions or type of equipment specified shall not be acceptable. In order to ensure parts are interchangeable, maintain quality, interface between the various

subsystems, and establish minimums with regard to ranges and accuracy, strict compliance with the above requirements shall be maintained. System design shall allow for the removal of individual devices from service without disrupting other devices in service.

F. Equipment shall be fabricated, assembled, installed, and placed in proper operating condition in full conformity with detail drawings, specifications, engineering data, instructions, and recommendations by the equipment manufacturer as approved by the Engineer.

G. The PCSI shall be responsible for calibrating all existing instruments that will interface with the control system.

H. To facilitate the Owner's future operation and maintenance, products shall be by the same major manufacturer, with panel-mounted devices of the same type and model as far as possible.

I. The water pump stations where improvements will take place are existing and all work shall be coordinated with station operating personnel to minimize impact on daily operation. Specifically, the contractor shall be responsible for providing a detailed daily plan to demonstrate how each of the PLCs shall be replaced or modified so that there is no operational down time experienced by the station. This plan shall be a submitted for review and approval before any work is started on site. The actual sequence of the work is left to the contractor, but extensive pre-planning is necessary to accomplish the work. The following criteria must be used by the contractor when developing the PLC Replacement Plan:

1. PLC outages that result in more than one hour of operational downtime will not be allowed.

2. PLC outages of more than twice in an eight hour period will not be allowed.

3. Work on more than one PLC at a time will not be allowed.

4. The owner's personnel will operate all equipment in the station. The contractor shall not operate any City owned equipment. Work to place specific equipment into MANUAL operation must be coordinated with the owner at least 24 hours in advance. In cases where there are no existing devices to place equipment into a constant running operation (i.e. no Hand-Off-Auto switch), then the contractor shall improvise by using temporary wiring.

5. The PCSI contractor shall use temporary measures to ensure that the flow pacing signals used to meter chemicals are maintained at all times, regardless of which PLCs are out of service.

J. The water pump stations are fully operational facilities monitored and controlled by local panels, PLCs and remote designated control stations. After switch over, the PCSI must demonstrate that all new equipment and reused existing equipment is connected to PLCs and the new computer system is fully functional as specified and as shown on the Contract Drawings.

K. The Owner shall retain salvage rights to all material and equipment removed in the course of this work. All materials and equipment retained by the Owner shall be delivered to a point designated by the Owner in Houston, Texas. Any materials or equipment not retained by the Owner shall be removed from the site and disposed of by the General Contractor in accordance with applicable regulations and laws.

L. All equipment and installations shall satisfy applicable Federal, State, and local codes.

M. The Contract Drawings and related specification sections provide additional details showing building plan layouts, instrument device specifications, functional requirements of the system, and interfacing with other equipment.

N. All materials, equipment, labor, and services necessary to achieve the monitoring and control functions described herein shall be provided in a timely manner so that the monitoring and control functions are available when the equipment is ready to be placed into service.

O. The PCSI shall coordinate and schedule all required testing with the General Contractor, Owner, and Engineer.

P. The PCSI shall coordinate and schedule all required training with the General Contractor, Owner, and Engineer.

Q. The PCSI shall provide a monthly status report and updated project schedule to the General Contractor to be included in the General Contractor's overall project schedule.

R. All software and hardware required for the project shall be licensed to the city and submitted to the city at end of the project.

1.02 MEASUREMENT AND PAYMENT

A. No separate payment will be provided for work performed under this Section. Include the cost for this work in the lump sum base bid.

B. Refer to Section 01270 – Measurement and Payment.

1.03 RELATED WORK

A. The PCSI shall furnish all materials, labor, and services specified in the following specification sections as required ensuring that a single, coordinated system is supplied:

1. Section 13315 – Process Instrumentation and Controls - Products

2. Section 13325 – Control Panels and Panel Mounted Equipment

3. Section 16195 – Electrical Identification

B. Divisions requiring coordination shall include, but not be limited to, the following:

1. Division 1 - General Requirements

2. Division 13 - Special Construction

3. Division 15 - Mechanical

4. Division 16 - Electrical

C. The PCSI shall coordinate with all equipment suppliers, mechanical subcontractor, electrical subcontractor, and General Contractor.

1.04 COORDINATION MEETINGS

A. A. The PCSI shall schedule and administer a minimum of three mandatory coordination meetings. The PCSI shall make arrangements for meetings; prepare agenda with copies to participants at least one week before scheduled meetings. The meetings shall be conducted at DWO (Drinking Water Operations) or at the construction field office and shall include, as a minimum, attendance by the Owner, Engineer, General Contractor's project engineer, PCSI's project engineer, and the electrical subcontractor.

1. The first coordination meeting shall be held in advance of the first PCSI shop drawing submittal. The purpose of the first meeting shall be for the PCSI to:

a. Summarize their understanding of the project

b. Discuss any proposed substitutions or alternatives

c. Schedule testing and delivery milestone dates

d. Provide a forum for the PCSI to coordinate hardware and software related issues

e. Request any additional information required from the Owner and/or Engineer.

f. The PCSI shall bring a draft version of shop drawings to the meeting to provide the basis for the Owner/Engineer's input into their development.

2. The second coordination meeting shall be held after the Field Instruments, Digital System Hardware, and Control Panels and Panel Mounted Equipment shop drawing submittals have been reviewed by the Engineer and returned to the PCSI. The purpose of the second meeting is to:

   a. Discuss comments made on the submittal packages

   b. Refine scheduled milestone dates

   c. Coordinate equipment installation activities

3. The last coordination meeting shall be held one month prior to factory acceptance testing. The purpose of the last coordination meeting is to discuss any remaining coordination requirements.

4. A typical agenda may include, but is not limited to, the following:

   a. Review minutes of previous meetings

   b. Review of work progress

   c. Field observations, problems, and decisions

   d. Identification of problems, which impede planned progress

   e. Review of submittal schedule and submittal status

   f. Review of off-site fabrications and delivery schedules

   g. Maintenance of progress schedule

   h. Corrective measures to regain projected schedules

   i. Planned activities for subsequent work period

   j. Coordination of projected progress

   k. Maintenance of quality and work standards

   l. Effect of proposed changes on progress schedule and coordination

   m. Other business relating to project

B. The PCSI's cost associated with the coordination meetings is the responsibility of the PCSI.

1.05 SUBMITTALS

A. Submit shop drawings in accordance with Section 01330, Submittals. The shop drawings shall fully demonstrate that the equipment and services to be furnished comply with the provisions of these specifications and provide a true and complete record of the equipment as manufactured and delivered. Each submittal shall be securely bound with an index and sectional dividers. All submittal drawings shall be legible and shall be 11 inches x 17 inches.

B. The Engineer shall determine whether a product is an "Approved Equal" based upon the information listed herein and the manufacturer's data sheets regarding the models specified. Alternate equipment must meet the criteria listed herein and any additional information in the manufacturer's data sheets in order to be accepted as an "Approved Equal". Supplier must furnish five working installation references for any alternate equipment along with owner, contact, and telephone number.

C. The submittals listed below shall be provided as a minimum. Other specification sections may require other submittals not listed here. Each submittal must be complete. No partial submittals will be accepted.

1. System Input/Output List

2. Project Plan

3. The project plan shall be submitted and approved before any additional submittals (except I/O List) will be accepted.

4. Field Instruments

5. Digital System Hardware

6. Control Panels and Panel Mounted Equipment

7. Testing

8. Training

9. Loop Diagrams

10. Spares, Expendables, and Test Equipment

11. Operation and Maintenance (O&M) Manuals

D. Submittal Descriptions

1. System Input/Output List

a. Within 90 days of the contract award, the PCSI shall submit a System Input/Output List submittal containing a complete system Input/Output (I/O) list for equipment connected to the control system under this Contract. The I/O list shall be submitted in a Microsoft Excel electronic file format on a CD ROM and an 8 1/2-inch by 11-inch hard copy. The hard copy list shall be sorted first by ISA tag name and second by I/O type (i.e., AI, AO, DI, DO, etc.). The list shall contain, as a minimum, the following for each active point and spare point:

(1) Tag name

(2) Type of I/O (i.e., DI, DO, AI or AO)

(3) I/O point address (PLC name/address and point address)

(4) Point name (or SPARE)

(5) Point description

(6) High/Low range and engineering units

(7) Alarm limits

(8) Relay normal status contact configuration

(9) I/O terminal point physical location (panel name, rack, slot etc.)

(10) 2-wire or 4-wire instrument.

2. Project Plan

a. The Project Plan shall provide an overview of the proposed system including system architecture drawing, approach to work, proposed work schedule indicating milestones and potential meetings, project personnel and organization, details of factory testing and field testing, and details of training program. The Project Plan shall also include an acknowledgment of conformance to the specification on a paragraph-by-paragraph basis indicating any proposed deviations. The schedule shall be coordinated with the project execution schedule and illustrate all major project milestones including the following:

(1) Schedule for all subsequent project submittals

(2) Schedule for all project design review meetings

(3) Schedule for manufacture, assembly and staging of all process control system equipment

(4) Schedule for all tests

(5) Schedule for shipment of all process control system equipment and peripheral devices

(6) Schedule for equipment start-up

(7) Schedule for all training

3. Existing System Replacement Work Plan

   a. Provide in detail a step-by-step switchover plan from the existing system to the new PC/PLC-based monitoring and control system for the existing plant.

   b. The submittal shall provide the coordination details among Owner, General Contractor, and subcontractors that may be affected by the switchover plan.

   c. The submittal shall include a switchover schedule.

4. Field Instruments

   a. This submittal shall provide complete documentation of all field instruments using ISA-S20 format. A complete Bill of Materials (BOM) listing all instrumentation equipment shall be provided.

   b. Data Sheets

      (1) Provide data sheets for each instrument listing model numbers, options, and ancillary devices that are being provided. The data sheets shall be provided with an index, proper identification, and cross-referencing. The data sheets shall include, but not be limited to, the following information:

      (2) Plant Equipment Number and ISA tag number per the Loop Diagrams

      (3) Product (item) name used herein and on the Contract Drawings

      (4) Manufacturer's complete model number

(5) Location of the device

(6) Input output characteristics

(7) Range, size, and graduations

(8) Physical size with dimensions, enclosure NEMA classification and mounting details

(9) Materials of construction of all components

(10) Instrument sizing calculations where applicable

(11) Certified calibration data for all flow metering devices

c. Equipment Specification Sheets

(1) Provide equipment specification sheets, which, shall fully describe the device, the intended function, how it operates and its physical environmental and performance characteristics. Each data sheet shall have appropriate cross references to loop or equipment identification tags. As a minimum the specification sheets shall include the following:

a) Dimension, rigid clearances

b) Mounting or installation details

c) Connection

d) Electrical power or air requirements

e) Materials of construction

f) Environmental characteristics

g) Performance characteristics

h) Complete information regarding the field instruments as required by ISA-S5.4 standards shall be provided under this contract.

5. Digital System Hardware

a. This submittal shall provide complete documentation of the proposed hardware (PLC's, RIO's, computers, communication equipment, cables, peripherals, etc.) A complete BOM listing all digital hardware equipment shall be provided.

b. The submittal shall include the following:

(1) System Block Diagram

A complete schematic system block diagram(s) showing the interconnections between major hardware components including, but not limited to:

a) Control centers

b) Panels

c) Power supplies

d) Consoles

e) Computer and peripheral devices

f) Telemetry equipment

g) Local digital processors and like equipment

h) Surge Protetion

i) Fuses on Analog loops

j) Radio connection to control systems

(2) The block diagram shall reflect the total integration of all digital devices in the system and any human machine interface (HMI) locations. Location of all components shall be clearly identified with appropriate cross-references.

(3) The diagram shall reference all interconnecting cabling requirements for digital components of the system including any data communication links.

c. Data Sheets

(1) A data sheet for each hardware component listing all model numbers, options, auxiliary and ancillary devices that are being provided.

(2) The data sheets shall be provided with an index, proper identification, and cross-referencing. They shall include, but not be limited to, the following information:

a) Equipment Number and ISA tag number

b) Product (item) name used herein and on the Contract Drawings

c) Manufacturer's complete model number

d) Location of the device

e) Input/output characteristics

f) Range, size, and graduations

g) Physical size with dimensions, enclosure NEMA classification and mounting details

h) Materials of construction of all components

i) Power supply device sizing calculations where applicable

d. The Digital System Hardware submittal shall also contain all planning information, site preparation instructions, grounding and bonding procedures, cabling diagrams, plug identifications, safety precautions or guards, and equipment layouts in order to enable the General Contractor to proceed with the detailed site preparation for all equipment.

6. Control Panels and Panel Mounted Equipment

a. This submittal shall provide complete documentation of all panel instruments, control panels, and control equipment not submitted elsewhere. A complete BOM listing all instrumentation and control equipment shall be provided.

b. Provide data sheets for each component listing all model numbers, options, and ancillary devices that are being provided. The data sheets shall be provided with an index, proper identification, and cross-referencing. The data sheets shall include, but not be limited to, the following information:

(1) Plant Equipment Number and ISA tag number

(2) Product (item) name used herein and on the Contract Drawings

(3) Manufacturer's complete model number

(4) Location of the device

(5) Input - output characteristics

(6) Range, size, and graduations

(7) Physical size with dimensions, enclosure NEMA classification and mounting details

(8) Materials of construction of all components

(9) Panel instrument or control device sizing calculations where applicable

c. Provide equipment specification sheets, which shall fully describe the device, the intended function, how it operates, and its physical environmental and performance characteristics. Each equipment specification sheet shall have appropriate cross references to loop or equipment identification tags with model number and information pertaining to the item highlighted. As a minimum the specification sheets shall include the following:

(1) Dimension, rigid clearances

(2) Mounting or installation details

(3) Connection

(4) Electrical power or air requirements

(5) Materials of construction

(6) Environmental characteristics

(7) Performance characteristics

d. Provide detailed drawings covering control panels, consoles and/or enclosures, which shall include:

(1) Cabinet assembly and layout drawings to scale. Drawings shall include both front and interior subpanel layouts.

(2) Material, fabrication, and painting specifications

(3) Color selection samples for selection by the Engineer

(4) Where graphic display panels are required, submit detailed layouts to scale, including symbols and line widths, as well as color selection samples and details of fabrication. Half-scale layouts shall be acceptable.

(5) Panel wiring diagrams showing all power connections to equipment within and on the panel, combined panel power draw requirements (volts, amps), breaker sizes, fuse sizes, and grounding. This wiring diagram shall be in ladder logic format and shall reference the appropriate loop drawing for continuations or details where required. Show all wire numbers and terminal block designations.

e. The submittal shall also contain all planning information, site preparation instructions, grounding and bonding procedures, cabling diagrams, plug identifications, safety precautions or guards, and equipment layouts in order to enable the General Contractor to proceed with the detailed site preparation for all equipment.

f. The submittal shall also include heat dissipation calculations for each enclosure.

7. Testing (The PCSI shall invite City personnel to all tests)

a. A test plan shall be submitted after the Owner and/or Engineer have approved all hardware submittals. The test plan shall demonstrate that the PCSI has designed and configured a system that meets the design specifications. The test plan shall be submitted prior to the preparation of the detailed test procedures and submit outlines of the specific proposed tests. Submittals shall include examples of the proposed forms and checklists.

b. The system shall be tested using the system architecture drawing and a Bill of Materials of all hardware indicating manufacturer, model, and serial number. The documents for the test plan shall be structured so that the Engineer understands what the inputs are, what the predicted outputs should be and what the actual outputs are. The test plan shall have a sign off and date block for the PCSI, General Contractor, Owner, and Engineer.

c. The test plan should include the following as a minimum:

(1) A BOM listing control system components' manufacturer, model and serial number.

(2) System hardware summary

(3) A testing schedule describing the specific tasks to be performed and the time allotted for each task

(4) Communications tests to the various PLCs for discrete and analog I/O data transfer and non-PLC Bus devices.

(5) 100 percent I/O point test including all spare points based upon the previously submitted system I/O list

d. Test procedures shall be submitted after the test plan submittal has been reviewed by the Engineer and returned stamped either Approved or Approved as Noted, Confirm. The submittal shall document the proposed procedures to be followed during the test. Procedures shall include test descriptions, forms, and checklists to be used to control and document the required tests. Testing shall not be started until all Testing Submittals have been approved.

e. For Test Documentation, submit a copy of the signed off test procedures upon completion of each required test.

8. Training (Include City Plant Operators who will operate the plant via the HMI)

a. Submit an overview of the proposed training plan. Each proposed course shall include:

(1) An overview of the training plan explaining why specific courses are proposed

(2) Course title and objectives

(3) Prerequisite training and experience of attendees

(4) Recommended attendees

(5) Course Content - A topical outline

(6) Course Duration

(7) Course Location - Training center or jobsite

(8) Course Format - Lecture, laboratory demonstration, etc.

b. The Engineer shall review the preliminary training plan submittal with the Owner.

c. Upon receipt of the Owner's and Engineer's comments on the preliminary training plan, submit the specific proposed training plan. The training plan shall include:

(1) Definition of each course

(2) Specific course attendance

(3) Schedule of training courses including dates, duration, and location of each class

(4) Resumes of the instructors who will actually conduct the training

9. Loop Diagrams

a. Provide detailed loop diagrams on single 11 inches x 17 inches or 8.5 inches x 11 inches sheets for each monitoring or control loop. The submittal shall also be submitted in electronic format on a flash drive. The loop diagrams shall show all components of the loop both analog, digital, and discrete including all relays, switches, dropping resistors, etc. which are being provided for proper operation. Loop numbers used shall correspond to the loop numbers indicated in the contract documents. The format shall be the Instrument Society of America, Standard for Instrument Loop Diagrams, ISA-S5.4, and the following requirements:

(1) On each diagram present a tabular summary of:

a) The output capability of the transmitting instrument

b) The input impedance of each receiving instrument

c) Estimate of the loop wiring impedance based on wire sizes and approximate length used

d) The total loop impedance

e) Reserve output capacity

(2) Show all interconnecting wiring between equipment, panels, terminal junction boxes and field mounted components. The diagrams shall show all components and panel terminal board identification numbers and all wire numbers. This diagram shall include all intermediate terminations between field elements and panels (e.g., terminal junction boxes). The diagrams shall be coordinated with the electrical contractor and bear mark showing this has been done.

(3) Show location of all devices

(4) Show instrument description showing type, manufacturer, model number, range, setpoints, and operation (e.g., fail open, open on energization, normally closed, etc.) as applicable.

(5) Show all instrument loop power or instrument air requirements back to termination on terminal block or bulkhead, fuse blocks (including fuse size), etc., as applicable.

(6) Show all grounding points within cabinets and panels and identify the connection point of individual components.

(7) Complete information regarding the field instruments as required by ISA-S5.4 standards shall be provided on the loop diagrams under this contract.

10. Spares, Expendables, and Test Equipment

a. This submittal shall include the following for each Subsystem:

(1) A list of, and descriptive literature for, spares, expendables, and test equipment as specified in Instrumentation Sections.

(2) A separate list of, and descriptive literature for, additional spares, expendables, and test equipment recommended by the PCSI

(3) Unit and total cost for the additional spare items recommended for each subsystem

(4) Storage instructions for all spare parts

(5) Any specialty software or hardware tools used during configuration of the project.

NOTE: These specialty tools must be turned over to the Owner.

11. Operation and Maintenance (O & M) Manuals

a. Provide O & M Manuals per section 13300-1.12.

b. The submittal shall also be submitted in electronic format on a CD-ROM

1.06 REFERENCE STANDARDS

A. Use referenced standards when City of Houston standards do not exist.

B. American Society for Testing and Materials (ASTM).

1. ASTM A269 - Standard Specification for Seamless and Welded Austenitic Stainless Steel Tubing for General Service.

C. Instrument Society of America (ISA)

1. ISA S5.2 - Binary Logic Diagrams for Process Operations

2. ISA S5.3 - Graphic Symbols for Distributed Control/Shared Display Instrumentation Logic and Computer Systems.

D. American National Standards Institute (ANSI)

1. ANSI X3.5 - Flowchart Symbols and Their Usage in Information Processing

E. National Electrical Manufacturers Association (NEMA)

F. Where reference is made to one of the above standards, the revision in effect at the time of bid opening shall apply.

1.07 PCSI QUALIFICATIONS

A. The PCSI shall perform all work necessary to select, furnish, configure, customize, debug, install, connect, calibrate, and place into operation all hardware and software specified within this specification and other related divisions of this specification.

B. The PCSI shall be a "systems house" regularly engaged in the design and installation of computer systems and their associated subsystems as they apply to the municipal water or wastewater industry. For the purposes of this specification section, a "systems house" shall be interpreted to mean an organization that complies with all of the following criteria:

1. Employs a Texas Registered Professional Control Systems Engineer or Texas Registered Professional Electrical Engineer to supervise or perform the work required by this specification section.

2. Employs personnel on this project who have successfully completed a manufacturer's training course on the configuration and implementation of the specific programmable controllers, computers, and software proposed for this project.

3. Has performed work of similar or greater complexity on at least three projects within the last five years and has implemented and completed at least one of the three projects with the proposed HMI software.

4. Has been in the water/wastewater industry performing the type of work specified in this specification section for a minimum of five continuous years.

C. The PCSI shall maintain a fully equipped office/production facility with full time employees capable of fabricating, configuring, installing, calibrating, troubleshooting, and testing the system specified herein. Qualified repair personnel shall be available and capable of reaching the facility within 24 hours.

D. Actual installation of the system need not be performed by the PCSI's employees; however, the PCSI shall provide the onsite technical supervision of the installation.

E. The PCSI shall furnish equipment which is the product of one manufacturer to the maximum practical extent. Where this is not practical, all equipment of a given type shall be the product of one manufacturer.

F. The General Contractor must select a pre-approved PCSI from the list below. Only pre-approved PCSI companies are accepted.

BL Technology, Inc.
13171 Misty Willow Drive
Houston, TX, 77070
Attn: Robert Lee
Phone: 281-970-8191

Boyer Inc.
8904 Fairbanks N. Houston
Houston, TX 77064
Attn: Stacy Jordan
Phone: 713-466-5395

MCC Weimar
Weimar Manufacturing
505 South Eagle Street
Weimar, TX 78962
Attn: Frank Macaulay
Phone: 979-725-8527

Prime Controls, LP
10400 Westoffice
Suite 105
Houston, TX 77042
Attn: Mike Whitman
Phone: 713-244-9747

Automation Nation, Inc.
1700 Gazin St.
Houston, TX 77020
Attn: Rich Kendall

Phone: 713-675-4999

G. Being listed in this specification section does not relieve any potential PCSI from meeting the qualifications specified in this section.

H. Listed PCSI companies are not required to submit a qualification proposal. Companies interested in being pre-approved as a PCSI, shall submit three (3) copies of a qualification proposal to the Engineer no later than two weeks before the bid opening date. Additional pre-approved PCSI companies will be listed by Addendum no later than seven (7) days before the bid opening date.

1. The qualification proposal shall provide details and a description of how the supplier proposes to fulfill the requirements set forth in this Specification. The supplier shall present the proposal in sufficient detail so that proper evaluation regarding the experience and capabilities of the supplier can be performed.

   a. The proposal shall contain evidence that the supplier has sufficient financial resources to meet the obligations incidental to the performance of the work including available bonding. (This requirement may be provided in the form of a verifiable or certified financial report for the company's latest fiscal year).

   b. The proposal shall contain a list of personnel available for assignment to the responsible positions of Project Manager, Project Engineer, Lead Programmer, Installation Supervisor, and Area Service Representative. Also, include a concise resume of each individual's education, work experience, and accomplishments.

   c. The proposal shall contain the following specific information:

      (1) Maintenance services available for hardware and software: Evaluation will be based on the supplier's capability to provide the required routine and emergency services. The supplier's proposal is to describe the capabilities and location of his/her nearest (to job site) service organization. It is the intent of the Specification to obtain all system maintenance services from the supplier. If the supplier intends to subcontract all or portions of the service requirements, it must be stated as such along with the name and address of the organization.

      (2) Technical validation examples of recently completed and similar scope projects: The supplier shall provide information regarding type, size, complexity, and performance of five (5) systems recently completed, along with names, addresses, and telephone numbers of persons qualified to verify supplier's statements approximate cost of the instrumentation system supplied, project completion date and description. Evaluation shall be based on the similarity of system requirements and supplier's performance.

(3) A description of how the supplier plans to execute the various functions and locations where the various portions of the work will be performed, coordinated and managed (e.g., design, engineering, manufacturing, programming, testing and scheduling). The vendor is required to state in his/her proposal those functions, which he/she intends to subcontract to other organizations and include the name, address and capabilities of these organizations.

d. The supplier shall be required to demonstrate a minimum of five (5) years recent, past experience in the design, manufacture and commissioning of instrumentation and control systems of comparable size, type and complexity to the proposed project. The supplier shall be required to have his/her own in house capability to handle complete system engineering, fabrication, and testing.

e. The supplier shall indicate that he/she has in his/her employ capable personnel for detailed engineering, coordination, drafting, procurement and expediting, scheduling, construction, testing, inspection, installation, training start up service for calibration and commissioning and warranty compliance for the period specified.

1.08 DELIVERY, STORAGE AND HANDLING

A. Provide Delivery, Storage, and Handling requirements per Specification Section 01600 and as specified below:

B. Shipping Precautions

1. After completion of shop assembly, factory test, and approval, all equipment, cabinets, panels, and consoles shall be packed in protective crates and enclosed in heavy duty polyethylene envelopes or secured sheeting to provide complete protection from damage, dust and moisture. Dehumidifiers shall be placed inside the polyethylene coverings. The equipment shall then be skid mounted for final transport. Lifting rings shall be provided for moving without removing protective covering. Boxed weights shall be shown on shipping tags together with instructions for unloading, transporting, storing, and handling at jobsite.

2. Special instructions for proper field handling, storage, and installation required by the manufacturer for proper protection, shall be securely attached to the packaging for each piece of equipment prior to shipment. The instructions shall be stored in resealable plastic bags or other acceptable means of protection.

3. None of the control equipment shall be shipped to the site until the room(s) are environmentally suitable.

C. Identification

1. Each component shall be tagged to identify its location, tag number and function in the system. Identification shall be prominently displayed on the outside of the package.

2. Each piece of equipment supplied shall have a permanent stainless steel tag firmly attached and permanently and indelibly marked with the instrument tag number, as given in the Drawings.

D. Storage

1. Equipment shall not be stored out of doors. Equipment, including in line equipment, shall be stored in dry permanent shelters and adequately protected against mechanical injury. If any apparatus has been damaged, the General Contractor, at his own cost and expense, shall repair such damage. If any equipment has been subject to possible damage by water, it shall be thoroughly dried and put through such tests as directed by the Engineer. Any repair or replacement shall be at the cost and expense of the General Contractor.

1.09 PROJECT/SITE REQUIREMENTS

A. Environmental Requirements. Air-conditioned areas require NEMA Type 12 ventilated enclosures. All other areas require NEMA Type 4X Type 316 stainless steel enclosures. <u>All instrumentation enclosures and all instruments mounted outdoors shall be furnished with sun shields.</u>

B. Elevation. Equipment shall be designed to operate at a ground elevation of approximately 1500 feet above mean sea level.

C. Temperature. Indoor areas' equipment shall be suitable for 10 to 35 C degrees ambient. Outdoor areas' equipment shall be suitable for 30 to 50 C degrees ambient. Storage temperatures shall range from zero to 50 C degrees ambient. Additional cooling or heating shall be furnished if required by the equipment.

D. Relative Humidity. Air-conditioned area equipment shall be suitable for 20 to 95 percent relative, non condensing humidity. All other equipment shall be suitable for 0 to 100 percent relative, condensing humidity.

E. Power Supply. 120 volts AC sources of electric supply shall be unregulated industrial panel boards.

1.10 MAINTENANCE

A. Spare Parts

1. Spare parts shall be as defined in the related specification sections. All spare parts shall be new and unused.

2. All spare parts shall be individually packaged and labeled.

3. Provide one (1) gallon of touch up paint, in one quart containers, for each type and color used for all cabinets, panels, consoles, etc., supplied under the related specification sections.

4. The spares listed above shall be packed in a manner suitable for long term storage and shall be adequately protected against corrosion, humidity, and temperature.

1.11 WARRANTY

A. Provide equipment warranties per Section 01775, Warranties and Bonds, and herein.

1.12 O & M MANUALS

A. Prior to final acceptance of the system and owner training, operating and maintenance manuals covering instruction and maintenance on each type of equipment shall be furnished in accordance with Section 01782, Operating and Maintenance Data.

B. The instructions shall be bound in three ring binders with Drawings reduced or folded for inclusion and shall provide the following as a minimum:

1. A comprehensive index

2. A complete "As Constructed" set of approved shop Drawings

3. A complete list of the equipment supplied, including serial numbers, ranges, and pertinent data

4. Full specifications for each item

5. System schematic drawings "As Constructed," illustrating all components, piping and electrical connections of the systems supplied under this Section

6. Detailed service, maintenance, and operation instructions for each item supplied

7. Special maintenance requirements particular to this system clearly defined, along with special calibration and test procedures

8. Operating instructions which incorporate a functional description of the entire system, with references to the systems schematic Drawings and instructions

9. Complete parts lists with stock numbers and name, address, and telephone number of the local supplier

C. The final documentation shall be new documentation written specifically for this project, but may include standard and modified standard documentation. Modifications to existing hardware or software manuals shall be made on the respective pages or inserted adjacently to the modified pages. All standard documentation furnished shall have all portions that apply clearly indicated. All portions that do not apply shall be lined out.

D. The manuals shall contain all illustrations, detailed drawings, wiring diagrams, and instructions necessary for installing, operating, and maintaining the equipment. The illustrated parts shall be numbered for identification. All information contained therein shall apply specifically to the equipment furnished and shall only include instructions that are applicable. All such illustrations shall be incorporated within the printing of the page to form a durable and permanent reference book.

E. If the PCSI transmits any documentation or other technical information, which he considers proprietary, such information shall be designated. Documentation or technical information which is designated as being proprietary will be used only for the design, construction, operation, or maintenance of the system and, to the extent permitted by law, will not be published or otherwise disclosed.

F. The final documentation requirements are as follows:

1. As-built documentation shall include all previous submittals, as described in this Specification, updated to reflect the as built system. Any errors in or modifications to the System resulting from the Factory and/or Field Acceptance Tests shall be incorporated in this documentation.

2. The Hardware Maintenance documentation shall describe the detailed preventive and corrective procedures required to keep the System in good operating condition. Within the complete Hardware Maintenance documentation, all hardware maintenance manuals shall make reference to appropriate diagnostics, where applicable, and all necessary timing diagrams shall be included. A maintenance manual or a set of manuals shall be furnished for all delivered hardware, including peripherals. The Hardware Maintenance documentation shall include, as a minimum, the following information:

a. Operation Information - This information shall include a detailed description of how the equipment operates and a block diagram illustrating each major assembly in the equipment.

b. Preventive Maintenance Instructions - These instructions shall include all applicable visual examinations, hardware testing, diagnostic routines, and the adjustments necessary for periodic preventive maintenance of the System.

c. Corrective Maintenance Instructions - These instructions shall include guides for locating malfunctions down to the card replacement level. These guides shall include adequate details for quickly and efficiently locating the cause of an equipment malfunction and shall state the probable source(s) of trouble, the symptoms, probable cause, and instructions for remedying the malfunction.

d. Parts Information - This information shall include the identification of each replaceable or field repairable module. All parts shall be identified on a list in a drawing; the identification shall be of a level of detail sufficient for procuring any repairable or replaceable part. Cross references between the Instrumentation System Supplier's part number and manufacturer's part numbers shall be provided.

e. System Backup/Restore - This information shall include a detailed description of the procedure for backing up the computer system (including PC and PLC); reloading using a backup; and completely restoring a PC and/or PLC from a backup.

1.13 PROGRAMMING

A. Schedule a meeting with DWO's SCADA group and the SE to discuss the PLC programming philosophy for the project.

B. The SE shall program PLCs to reflect the philosophy provided by DWO's SCADA group.

C. Schedule a meeting with DWO's SCADA group and the SE to review programming.

D. After new PLCs are operational, schedule a meeting with DWO's SCADA group and the SE to review operation of PLCs.

PART 2: PRODUCTS

2.01 GENERAL

A. Process Control System:

1. All instrumentation supplied shall be of the manufacturer's latest design and shall produce or be activated by signals that are established standards for the water and wastewater industries.

2. All electronic instrumentation shall be of the solid state type and shall utilize linear transmission signals of 4 to 20 mA DC (milliampere direct current), however, signals between instruments within the same panel or cabinet may be 1-5V DC (volts direct current), or the like.

3. Output of equipment not of the standard signals as outlined, shall have the output immediately raised and/or converted to compatible standard signals for remote transmission. No zero-based signals will be allowed.

4. All instruments shall be provided with mounting hardware, floor stands, wall brackets, or instrument racks as shown on the Drawings or as required.

5. Equipment installed in a hazardous area shall meet Class, Group, and Division as shown on the Electrical Drawings, to comply with the National Electrical Code.

6. All indicators and recorder readouts shall be linear in process units, unless otherwise noted.

7. All transmitters shall be provided with either integral indicators or conduit mounted indicators in process units, accurate to two percent (2%).

8. Electronic equipment shall be of the manufacturer's latest design, utilizing printed circuitry and suitably coated to prevent contamination by dust, moisture and fungus. Solid state components shall be conservatively rated for their purpose to assure optimum long-term performance and dependability over ambient atmosphere fluctuations and 0 to 95% percent relative humidity. The field mounted equipment and system components shall be designed for installation in dusty, humid, and slightly corrosive service conditions.

9. All equipment, cabinets, and devices furnished hereunder shall be heavy duty type, designed for continuous industrial service. The system shall contain products of a single manufacturer, insofar as possible, and shall consist of equipment models that are currently in production. All equipment provided shall be of modular construction and shall be capable of field expansion.

10. The field mounted digital system equipment and system components shall be designed for installation in dusty, humid, and corrosive service conditions.

11. All electronic/digital equipment shall be provided with radio frequency interference protection and shall be FCC approved.

B. Electrical

1. All equipment shall be designed to operate on a 60 Hertz alternating current power source at a nominal 120 volts, plus or minus 10 percent, except where specifically

noted. All regulators and power supplies required for compliance with the above shall be provided between power supply and interconnected instrument loop. Where equipment requires voltage regulation, constant voltage transformers shall be supplied.

2. Panels containing networking equipment and PLC equipment shall be powered by two separate 24VDC power supplies. One pair of redundant 24VDC power supplies shall be furnished for the networking equipment and a separate pair of redundant 24VDC power supplies shall be furnished for loop powered instrumentation devices and PLC equipment.

3. Materials and equipment used shall be UL approved wherever such approved equipment and materials are available.

4. All equipment shall be designed and constructed so that in the event of a power interruption, the equipment specified hereunder shall resume normal operation without manual resetting when power is restored.

2.02 LIGHTNING/SURGE PROTECTION

A. Lightning/Surge protection shall be provided to protect the electronic instrumentation system from induced surges propagating along the signal and power supply lines. The protection systems shall be such that the protective level shall not interfere with normal operation, but shall be lower than the instrument surge withstand level, and be maintenance free and self-restoring. Instruments shall be housed in a suitable metallic case, properly grounded. Ground wires for all surge protectors shall be connected to a good earth ground, and where practical, each ground wire run individually and insulated from each other. These protectors shall be mounted within the instrument enclosure or a separate NEMA 4X junction box coupled to the enclosure.

B. Either a two or three-stage protection circuit, depending on the application, shall furnish I/O protection.

C. All wiring, hardware, and connection means shall comply with the National Electric Code and/or applicable local codes.

D. All suppressors shall have integral mounting brackets to attach 35mm DIN rail conforming to DIN EN50022, with the exception of conduit mounted devices.

E. The suppressor shall be mounted as close to the equipment it is protecting as possible.

F. Mounting guidelines will be followed as indicated in installation instruction provided by the manufacturer.

G. Wires shall be attached to the suppressor by means of a cable-clamping terminal block activated by a screw. Connections shall be gas-tight, and the terminal block shall be fabricated of non-ferrous, non-corrosive materials.

H. All wiring points and plug connections shall be "touch safe" with no live voltages that can make contact with a misplaced finger in accordance with IEC 529.

I. Analog and discrete and data protection DIN rail mounted, pluggable devices shall meet the following.

1. Surge suppression modules for 24V and 110V circuits shall be UL listed or recognized.

2. Surge protection shall consist of a multistage hybrid circuit with staging inductors or resistors to properly coordinate the components.

3. DIN rail mounted surge protection modules shall consist of two parts; a base terminal block and a plug protection module. Replacing a plug shall not require the removal of any wires nor shall it interrupt the signal. Base and plug shall have the ability to be coded to accept only the correct voltage plug.

4. Surge protection for analog or discrete I/O shall be designed to withstand a maximum 10 kA test current of a 8/20 microsecond waveform according to IEC 1024 Application Guide A and ANSI/IEEE C62.41 Category C Area.

5. Surge protection for hazardous area locations will conform to EN 50 020/DIN EN 50 020/VDE 0170/0171 part 7: 1996-04. Surge protection for hazardous areas shall have at least 500V isolation between intrinsic safety ground and earth ground.

6. Both plugs and bases shall have a rating of IP20 according to IEC 529. Bases shall have an integral label holder to mark each terminal block.

7. Operating temperature range shall be at least -40°C to +80°C.

8. Bases shall include metal mounting foot, which provides ground connection to DIN-rail.

9. Manufacturers:

   a. Analog: Phoenix Contact model series PT 2 x 2. One plug and base required for two analog loops. Discrete 5-24V: Phoenix Contact model series PT 4 x 1. One plug and base required for every four discrete signals. Discrete 60-230V: Phoenix Contact model series PT 2 x 1 VA. One plug and base required for every two discrete signals.

b. Dehn, with models to match the Phoenix Contact device ratings.

c. Approved Equal.

J. Analog and discrete DIN rail mounted, non-pluggable, high density devices shall meet the following

1. Surge protection shall consist of a multistage hybrid circuit with staging inductors or resistors to properly coordinate the components. Series resistance shall not exceed 4.7 ohms (+/- 10%).

2. DIN rail mounted surge protection housing width shall not exceed 6.2mm.

3. Surge protection for analog and digital I/O shall be designed to withstand a 5 kA test current of a (8/20)s waveform according to IEC 1024 Application Guide A and ANSI/IEEE C62.41 (Line to Ground). Surge handling capability of Line 1 + Line 2 shall be 10 kA of (8/20)s waveform.

4. Operating temperature range shall be at least -40C to +85C.

5. Maximum load current through the surge protection module shall not exceed 250 milliamps for analog and digital signal protection.

6. Cutoff frequency for analog modules shall be 3 MHz for a 50-ohm system and 1 MHz for a 150-ohm system. Cutoff frequency for digital modules shall be 2 MHz for a 50-ohm system and 600 KHz for a 150-ohm system.

7. Wire size range shall between 24 and 14 AWG.

8. Ex-I modules shall contain only diode and gas tube (no MOV) and shall be isolated from ground by 500VDC as required by EN 50 020.

9. Manufacturers

a. Phoenix Contact model series TT-2-PE-24DC, TT-2/2-24DC, or TT-EX(I)-24DC. Phoenix Contact model series PT 2 x Ex(I)-24DC. One plug and base required for two analog loops or four discrete signals.

b. Dehn, with models to match the Phoenix Contact device ratings.

c. Approved Equal.

K. Analog Signals (Conduit Mounted)

1. Surge protection shall consist of a multistage hybrid circuit utilizing only diodes and gas discharge tubes but no metal oxide varistors (MOVs).

2. Surge protection for analog and digital I/O shall be designed to withstand a 10 kA test current of a (8/20) µs waveform according to IEC 1024 Application Guide A and ANSI/IEEE C62.41 Category C Area.

3. Surge protection shall not have more than 10 ohms of series resistance.

4. Surge protection shall have a response time less than 1µs.

5. Maximum operating voltage shall not exceed 28 VDC.

6. Surge protection shall not have a cutoff frequency less than 400kHz (for a 600 ohm system) to allow HART protocol and other superimposed smart digital signals to function.

7. Surge protection module shall have an operating temperature range of at least -40°C to +65°C.

8. Maximum load current through the surge protection module shall not exceed 250 mA.

9. Manufacturers:

   a. Phoenix Contact model series PIPETRAB. Protection circuit is mounted in 3/4" stainless steel pipe nipple.

   b. Dehn, with models to match the Phoenix Contact device ratings.

   c. Approved Equal.

PART 3: EXECUTION

3.01 GENERAL INSTALLATION

A. The process control system, instrumentation, and accessory equipment shall be installed in accordance with the manufacturer's instructions. The locations of equipment, transmitters, alarms, and similar devices shown on the drawings are approximate only. Exact locations shall be as approved by the Engineer during construction. All information relevant to the placing of process control work shall be obtained in the field. In case of any interference with other work, proceed as directed by the Engineer and furnish all labor and materials necessary to complete the work in an approved manner.

B. Two complete sets of approved shop drawings shall be kept at the job site during all on site construction. Both sets shall be marked up identically to reflect any modifications made during field installation or start up. All markings shall be verified and initialed by the Engineer or his designated representative.

C. Following completion of installation and the Operational Readiness Test, one set of the marked up drawings shall be provided to the Engineer; the other set shall be retained by the Supplier for incorporation of the mark ups into final as built documentation.

D. The instrumentation installation details on the Contract Drawings indicate the designed installation for the instruments specified. Where specific installation details are not specified or shown on the Drawings, the American Petroleum Institute (API) Recommended Practice 550 shall be followed as applicable.

E. All work shall be executed in full accordance with codes and local rulings. Should any work be performed contrary to said rulings, ordinances and regulations, the General Contractor shall bear full responsibility for such violations and assume all costs arising therefrom.

F. All equipment used in areas designated as hazardous shall be designed for the Class, Group, and Division as required on the Electrical Drawings for the locations. All work shall be in strict accordance with codes and local rulings. Should any work be performed contrary to said rulings, ordinances and regulations, the Supplier shall bear full responsibility for such violations and assume all costs arising therefrom.

G. Unless specifically shown in the Contract Drawings, direct reading or electrical transmitting instrumentation shall not be mounted on process piping. Instrumentation shall be mounted on instrument racks or stands as detailed on the installation detail drawings or an Engineer approved equal mounting rack or stand. All instrumentation connections shall be provided with shutoff and drain valves. For differential pressure transmitters, valve manifolds for calibration, testing, and blow down service shall also be provided. For slurries, chemical or corrosive fluids, inline diaphragm seals shall be provided.

H. All piping to and from field instrumentation shall be provided with necessary unions, test tees, couplings, adapters, and shut off valves.

I. Field instruments that require power supplies shall be provided with local electrical shutoffs and fuses as required.

J. Brackets and hangers required for equipment mounting shall be provided and shall be installed in a workmanlike manner and not interfere with any other equipment.

K. The PCSI shall investigate each space in the building through which equipment must pass to reach its final location. If necessary, the PCSI shall be required to ship material in

sections sized to permit passing through restricted areas in the building. The PCSI shall also investigate and make any field modifications to the allocated space for each cabinet, enclosure, and panel to assure proper space and access (front, rear, and side).

L. The shield on each process instrumentation cable shall be continuous from source to destination and be grounded at the source end as directed by the manufacturer of the instrumentation equipment. In no case shall there be more than one ground point for each shield.

M. Lifting rings shall be removed from cabinets/assemblies. Hole plugs the same color as the cabinet shall be provided for the holes.

N. The PCSI, acting through the General Contractor, shall coordinate the installation, the placing and location of system components, and their connections to the process equipment panels, cabinets and devices, subject to the Engineer's approval. The PCSI shall be responsible for ensuring that all field wiring for power and signal circuits is done correctly in accordance with best industry practice and provide for all necessary system grounding to ensure a satisfactory functioning installation. The General Contractor hereunder shall schedule and coordinate his work under this Section with that of the electrical work specified under applicable Sections of Division 16.

O. The PCSI shall provide service by the PLC service representative to verify that the entire PLC system is installed per the manufacturer's requirements. The PCSI shall supply certified copies of all the tests/field reports supplied by the PLC service representative to the Owner for their records.

P. The PCSI shall provide service by a factory-trained representative to verify that the entire local area network (LAN) is installed per the manufacturer's requirements. The PCSI shall include in his bid the cost of the factory trained representative to inspect all LAN terminations and the cost of testing the LAN to verify that it is installed and operating correctly (e.g., data being transferred from node to node, no excessive timeouts, minimal collisions, etc.) The PCSI shall provide certified copies of all tests and legible copies of all field reports generated by the factory-trained representative to the Owner for their records.

3.02 TESTS (GENERAL)

A. The PCSI shall test all equipment at the factory prior to shipment. Unless otherwise specified in the individual specification sections, all equipment provided by the PCSI shall be tested at the factory as a single fully integrated system.

B. As a minimum, the testing shall include the following:

1. Unwitnessed Factory Test (UFT)

2. Functional Demonstration Test (FDT)

C. Each test shall be in the cause and effect format. The person conducting the test shall initiate an input (cause) and, upon the system's or subsystem's producing the correct result (effect), the specific test requirement shall be satisfied.

D. All tests shall be conducted in accordance with prior Engineer approved procedures, forms, and checklists. Each specific test shall be described and followed by a section for sign off by the appropriate party after its satisfactory completion.

E. Copies of these sign off test procedures, forms, and checklists will constitute the required test documentation.

F. Provide all special testing materials and equipment. Whenever possible, perform tests using actual process variables, equipment, and data. When it is not practical to test with real process variables, equipment, and data, provide suitable means of simulation. Define these simulation techniques in the test procedures.

G. The General Contractor shall require the PCSI to coordinate all testing with the Engineer, all affected Subcontractors, and the Owner.

H. The Engineer reserves the right to test or retest all specified functions whether or not explicitly stated in the prior approved Test Procedures.

I. The Engineer's decision shall be final regarding the acceptability and completeness of all testing.

J. No equipment shall be shipped until the Engineer has received all test results and approved the system.

K. The PCSI shall furnish servicemen and all special calibration and test equipment to perform the field tests.

L. Correction of Deficiencies

1. All deficiencies in workmanship and/or items not meeting specified testing requirements shall be corrected to meet specification requirements at no additional cost to the Owner.

2. Testing, as specified herein, shall be repeated after correction of deficiencies is made until the specified requirements are met. This work shall be performed at no additional cost to the Owner.

3.03 UNWITNESSED FACTORY TESTS (UFT)

A. The entire system, except primary elements, final control elements, and field mounted transmitters, shall be interconnected and tested to ensure the system operates as specified. All analog and discrete input/output points not interconnected at this time shall be simulated to ensure proper operation of all alarms, monitoring devices/functions, and control devices/functions. All process control strategies shall be simulated to ensure proper operation according to approved shop drawing.

B. All panels and assemblies shall be inspected and tested to verify that they are in conformance with related submittals, specifications, and Contract Drawings.

C. During the tests all digital system hardware and software shall have operated continuously for five days without a failure to verify the system is capable of continuous operation. The unwitnessed factorytest results shall be submitted to the Engineer for approval prior to the start of the Functional Demonstration Test (FDT).

3.04 FUNCTIONAL DEMONSTRATION TEST (FDT)

A. Prior to startup, the entire installed instrument and control system shall be certified that it is ready for operation. All preliminary testing, inspection, and calibration shall be complete. The FDT will be a test by the PCSI.

B. Once the facility has been started up and is operating, a witnessed FDT shall be performed on the complete system to demonstrate that it is operating and in compliance with these Specifications. Each specified function shall be demonstrated on a paragraph-by-paragraph, loop-by-loop, and site-by-site basis.

C. Loop-specific and non-loop-specific tests shall be the same as specified under WFT except that the entire installed system shall be tested and all functionality demonstrated.

D. Updated versions of the documentation specified to be provided during the factory tests shall be made available to the Engineer at the job-site both before and during the tests. In addition, one copy of all O&M Manuals shall be made available to the Engineer at the job-site both before and during testing.

E. The daily schedule specified to be followed during the factory tests shall also be followed during the FDT.

F. The system shall operate for 100 continuous hours without failure before this test shall be considered successful.

G. Demonstrate communication failure and recovery

H. Demonstrate total power failure and recovery. NOTE: The UPS shall be removed for this test.

I. Demonstrate a catastrophic failure and recovery of a workstation and a RTU (PLC).

J. Demonstrate procedure for backing up the workstation, and RTU (PLC); reload using a backup; and completely restore a workstation and RTU (PLC) from a backup.

K. The PCSI shall invite City SCADA, Electrical and Operations personnel to attend, witness and participate in the FDT.

L. The PCSI shall provide a documented test plan for the FDT. The test plan shall be submitted 60 days prior to testing. City SCADA, Electrical and Operations personnel shall provide comments on the test plan to the City's Project Manager. The PCSI shall incorporate City comments into the test plan and resubmit the test plan.

M. If City personnel determine the FDT is not successful, the PCSI shall repeat the FDT until the FDT is approved by the City.

3.05 TRAINING

A. General

1. The cost of training programs for the Owner's personnel shall be included in the Contract price. Where practical, the training and instruction shall be directly related to the system being supplied. The training shall be provided based on time and not courses to allow the Owner the flexibility to utilize the training time at his discretion.

2. Training shall be conducted at the Owner's facilities.

3. All Technicians, Operators, Engineers, and Managers of the Facility shall require training on the Process Control System (PCS). The training courses shall address operation, maintenance, and troubleshooting of the system provided. The courses shall be designed specifically for the type of personnel attending, such as Operators, Engineers, etc.

4. All training schedules shall be coordinated with, and at the convenience of, the Owner. Shift training may be required to correspond to the Owner's working schedule.

5. Provide detailed training manuals to supplement the training courses. The manuals shall include specific details of equipment supplied and operations specific to the project.

6. The trainer shall make use of teaching aids, manuals, slide/video presentations, etc. After the training services, all training materials shall be delivered to Owner.

END OF SECTION

Section 13315

PROCESS INSTRUMENTATION AND CONTROLS – PRODUCTS

PART 1: GENERAL

1.01 SCOPE OF WORK

A. This section covers the furnishing, installation, and services for the field mounted instruments and analyzers, major systems, panels, and subassemblies as detailed on the drawings.

B. Refer to Section 13300.

1.02 MEASUREMENT AND PAYMENT

A. No separate payment will be made for process instrumentation and controls – products. Include payment for process instrumentation and controls in the lump sum base bid.

1.03 RELATED WORK

A. Refer to Section 13300.

1.04 SUBMITTALS

A. Refer to Section 13300.

1.05 REFERENCE STANDARDS

A. Refer to Section 13300.

1.06 QUALITY ASSURANCE

A. The Engineer shall determine whether a product is an "Approved Equal" based on the information listed herein and the manufacturer's data sheets regarding the models specified. Alternate equipment must meet the criteria listed herein and any additional information in the manufacturer's data sheets in order to be accepted as an "Approved Equal". Supplier must furnish five working installation references for any alternate equipment along with Owner, contact, and telephone number.

1.07 MAINTENANCE AND TEST EQUIPMENT

A. In addition to the tools and test equipment specified in Section 13300, provide the following complete with carrying cases, patch cords, etc.:

1. One hand held smart transmitter calibrator, if required for the supplied products, provided by the transmitter manufacturer to calibrate all smart field transmitters provided.

2. The spares listed above shall be packed in a manner suitable for long term storage and shall be adequately protected against corrosion, humidity, and temperature.

3. Provide other spare parts as indicated on the individual device specifications.

PART 2: PRODUCTS

2.01 FLOW METERING INSTRUMENTS

A. Magnetic Flow Meters (Magmeters)

1. Magnetic flow meter systems shall include a magnetic flow tube and a microprocessor-based "smart" transmitter that is capable of converting and transmitting a signal from the flow tube. Magnetic flow meters shall utilize the characterized field principle of electromagnetic induction, and shall produce DC signals directly proportional to the liquid flow rate. Meters shall be capable of bidirectional flow and totalize for forward, reverse and net totals.

2. Each meter shall be furnished with a stainless steel metering tube and carbon steel flanges with a polyurethane liner. Linerless designs are not acceptable. Liner shall have a minimum thickness of 0.125 inches. The inside diameter of the liner shall be within 0.125 inches of the inside diameter of the adjoining pipe. Liner protectors shall be provided on all flow tubes. NSF Drinking Water approval shall be required for all lines sizes 4" or greater on potable water applications.

3. The flow tube shall be provided with Nickel Alloy (Hastelloy C) or 316 SS flush mounted electrodes. Ultrasonic electrode cleaning shall not be acceptable.

4. Grounding rings shall be provided for all meters. The use of grounding electrodes are not acceptable.

5. All materials of construction for metallic wetted parts (electrodes, grounding rings, etc.) shall be minimum 316 stainless steel, but shall be compatible with the process fluid for each meter in accordance with the recommendations of the manufacturer.

6. Flow tube shall be rated for pressures up to 1.1 times the flange rating of adjacent piping. System shall be rated for ambient temperatures of -30 to +65°C. Meter and transmitter housings shall meet NEMA 4X requirements as a minimum. When mounted in a meter vault (or otherwise specified), flowtube shall be of IP 68 construction as installed by the factory (no field IP 68 installation allowed). When meter and transmitter are located in classified explosion hazard areas, the meter and transmitter housings shall be selected with rating to meet the requirements for use in those areas. Non-metallic transmitter housings shall not be acceptable.

7. The transmitter shall be remote mounted and have a polyurethane painted dual compartment aluminum, NEMA 4X housing. Plastic housings are not acceptable. The transmitter shall utilize a 90-220 VAC power supply and have outputs including 4-20 mA (Hart), scalable frequency (0-10,000 Hz, pulse output, two (2) discrete outputs (to 30 VDC) and one (1) discrete input. Cabling between the transmitter and flowtube shall be supplied by the manufacturer.

8. The transmitter shall provide a pulsed DC coil drive current to the flow tube and shall convert the returning signal to a linear, isolated 4-20 mA DC signal. The transmitter shall utilize "smart" electronics and shall contain automatic, continuous zero correction, signal processing routines for noise rejection, and an integral LCD readout capable of displaying flow rate and totalized flow. The transmitter shall continuously run self-diagnostic routines and report errors via English language messages. Standard diagnostics shall include transmitter hardware and software fault, flowtube sensor coil fault, tunable empty pipe, grounding and wiring fault and high process noise.

9. The transmitter's preamplifier input impedance shall be a minimum of 10^9-10^{11} ohms which shall make the system suited for the amplification of low-level input signals and capable of operation with a material build up on the electrodes.

10. The transmitter shall provide an automatic low flow cutoff below a user configurable low flow condition (0-10%). The transmitter's outputs shall also be capable of being forced to zero by an external contact operation.

11. Each flow tube shall be factory calibrated in an ISO 9001 and NIST certified facility and assigned a calibration constant or factor to be entered into the associated transmitter as part of the meter configuration parameters. Manual calibration of the flow meter shall not be required. Meter configuration parameters shall be stored in non-volatile memory in the transmitter. An output hold feature shall be provided to maintain a constant output during configuration changes.

12. The transmitter shall be capable of communicating digitally with a remote configuration device via a frequency-shift-keyed, high frequency signal (Hart) superimposed on the 4-20 mA output signal. The remote configuration device shall be capable of being placed anywhere in the 4-20 mA output loop. A security lockout

feature shall be provided to prevent unauthorized modification of configuration parameters.

13. Accuracy shall be 0.25% of rate over the flow velocity range of 1 to 30ft/sec. Repeatability shall be 0.1% of rate; minimum turndown shall be 100:1. Minimum required liquid conductivity shall not be greater than 5 uS/cm. Maximum response time shall be adjustable between 1 and 100 seconds as a minimum. Transmitter ambient temperature operating limits shall be -10 to +50°C. Power supply shall be 115 VAC, 60 Hz.

14. The Magmeter shall have built-in self-diagnostics with troubleshooting codes and meter verification capability to include:

    a. Coil resistance.
    b. Coil signature value.
    c. Electrode resistance
    d. High process noise detection
    e. Electronics temperature monitoring
    f. Wiring and grounding verification
    g. Coil fault detection
    h. Empty pipe detection

    The transmitter shall have fully functional AMS Device manager including help screens and troubleshooting guidance. The flowmeter system shall be verifiable without an external calibration device.

15. Flow tubes shall be 150-lb flange mounted unless otherwise noted. The cables for interconnecting the meter and transmitter shall be furnished by the manufacturer.

16. Engineering Units: Flow (MGD or gpm)

17. Manufacturer:

    a. Emerson-Rosemount (no exception)

B. Propeller Meters

1. Description of Operation

    a. The meter shall consist of a rotating impeller positioned in the flow stream in a metering tube. When fluid passes through the meter tube, the fluid contacts the impeller causing it to spin. The impeller velocity is directly proportional to the velocity of the flow. Rotation of the impeller is transmitted by means of a right-angle gear drive to the register which calculates the flow rate by multiplying the flow velocity with the cross-sectional area of the meter tube.

2. Pressure Rating

   a. The meter shall be rated for a working pressure of 150 psi.

3. Housing

   a. The housing shall be NEMA 4X, epoxy coated steel.

4. Accuracy

   a. Plus or minus 2% of actual flow within the range specified for the meter size.

5. Options

   a. 4-20 mA output and pulse output.
   b. Engineering Units: Flow (MGD or gpm)

6. Manufacturer

   a. Water Specialties/McCrometer Model ML04-D (no exception).

C. Ultrasonic Flow Transmitter

1. Type

   a. Strap-On Flowmeter: The emitter in the sensor is excited electrically to send ultrasonic pulses in the direction of the surface of the liquid or solid which partially reflects the pulses. This echo is detected by the same sensor and is converted back into electrical signal. The time between sending and receiving the ultrasonic wave is proportional to the distance between the sensor and the reflection surface.

2. Monitor/Transmitter:

   a. Function/Performance

      (1) Power Requirement: 120 VAC 50/60 Hz

      (2) Output Signal: 1 isolated 4-20 mA analog signals

      (3) Accuracy: 0.25 % of programmable range or better

(4) Temperature compensation shall be provided for the entire range of measurement.

(5) Operating Temperature Range: – 4°F to 140°F

(6) Repeatability: 0.25 % of full scale

(7) Level transmitter shall be programmed by entering all operational data via a removable, non-intrusive infrared programming module.

b. Physical

(1) Enclosure: Panel, rail or wall mounted NEMA 4X (IP 45) polycarbonate enclosure. All mounting hardware shall be 316-stainless steel.

(2) Cable: Provided by the manufacturer with sufficient length to reach the sensor/Transducer without the risk of electromagnetic interference.

(3) Transmitter shall be provided with sunshield as specified in Section 13325 if mounted outside.

c. Physical

(1) Housing: Non-contact, Type 304 stainless-steel encapsulated sensor. Approved to be used in Classes I, II, and III, Division 1, 2.

(2) Mounting: 2" pipe mounting or flange mounting. Flange diameter shall be 6-in, 150-lb RF, Teflon-coated. See Instrumentation drawings for mounting details.

(3) All level elements shall be provided with submergence shields.

3. Accessories/Options

a. All necessary mounting brackets

4. Manufacturers

Stationary Ultrasonic Flowmeter model LF810 by Toshiba or approved equal.

2.02 LEVEL INSTRUMENTS

A. Ultrasonic Level Meter

1. Type

   a. The emitter in the sensor is excited electrically to send ultrasonic pulses in the direction of the surface of the liquid or solid which partially reflects the pulses. This echo is detected by the same sensor and is converted back into electrical signal. The time between sending and receiving the ultrasonic wave is proportional to the distance between the sensor and the reflection surface.

2. Monitor/Transmitter:

   a. Function/Performance

      (8) Power Requirement: 120 VAC 50/60 Hz

      (9) Output Signal: 2 isolated 4-20 mA analog signals

      (10) Alarms: 5 SPDT programmable relays. Relays shall be rated 5 amps at 250 VAC.

      (11) Minimum Range: 0.3 meter to 15 meters (1 ft to 50 ft)

      (12) Accuracy: 0.25 % of programmable range or better

      (13) Temperature compensation shall be provided for the entire range of measurement.

      (14) Operating Temperature Range: – 4°F to 140°F

      (15) Repeatability: 0.25 % of full scale

      (16) Level transmitter shall be programmed by entering all operational data via a removable, non-intrusive infrared programming module.

   b. Physical

      (4) Enclosure: Panel, rail or wall mounted NEMA 4X (IP 45) polycarbonate enclosure. All mounting hardware shall be 316-stainless steel.

      (5) Single Cable: Provided by the manufacturer with sufficient length to reach the sensor without the risk of electromagnetic interference.

      (6) Transmitter shall be provided with sunshield as specified in Section 13325 if mounted outside.

3. Level Element

a. Function/Performance

(1) Power Requirement: Provided by the transmitter

(2) Minimum Range: 0.3 meter to 15 meters (1 ft to 50 ft)

(3) Frequency (23°C): 10-60 kHz

(4) Maximum Beam Angle: 6°

(5) Altitude: Up to 2000 meters

(6) Operating Temperature Range: – 40°F to 203°F (-40°C to 95°C)

b. Physical

(4) Housing: Non-contact, Type 304 stainless-steel encapsulated sensor. Approved to be used in Classes I, II, and III, Division 1, 2.

(5) Mounting: 2" pipe mounting or flange mounting. Flange diameter shall be 6-in, 150-lb RF, Teflon-coated. See Instrumentation drawings for mounting details.

(6) All level elements shall be provided with submergence shields.

4. Accessories/Options

a. All necessary mounting brackets

5. Manufacturers

a. HydroRanger 200 by Siemens Milltronics, Echomax XPS Transducer Series

B. Flange-Mounted Pressure Sensing Level Transmitter

1. Type

a. Utilizing the hydrostatic pressure principle exerted on a flush mounted or extended diaphragm seal to calculate the height of the liquid column over the sensor. The liquid column is proportional to the liquid level and density. The

deflection of the diaphragm generates a change in the capacitance of the sensor which is converted to a continuous electrical signal representing the liquid level.

2. Pressure Sensing Level Transmitter

   a. Function/Performance

      (1) Power Requirement: 10.5 to 42.4 VDC. External power supply and power conditioner shall be provided.

      (2) Output: One analog, 4-20 mA

      (3) Output Reading: Level in engineering units (feet or meters)

      (4) Ambient Temperature Range: – 4°C to 140°F (-20°C to 80°C).

      (5) Operating Process Temperature Range: – 40 to 185°F (-40 to 85°C)

      (6) Humidity Range: 0-100 relative humidity

      (7) Volumetric Replacement: .005 in3 maximum

      (8) Accuracy: + 0.1 of the calibrated range or better

   b. Physical

      (1) Process Connection: 2", Class 150, Type 316-stainless steel flange

      (2) Transmitter Housing Material: NEMA 4X, Type 316-stainless steel. All mounting brackets and hardware shall be 316-stainless steel.

      (3) Display: In addition to local integral display, Remote LCD display and interface shall be provided. The display shall be mounted in an operator accessible location. The transmission cable and all required accessories shall be provided by the manufacturer. Minimum cable length shall be 100 ft.

      (4) Sensor Fill Fluid: Suitable for the process fluid being measured. When used for chemical metering service, the fill fluid shall be rated for the chemical being measured.

3. Diaphragm Seal

   a. 2" flush mounted diaphragm through Class 150, 316-stainless steel flange.

b. Diaphragm Sensor Material: Type 316-stainless steel. Hastelloy-C on all chlorine applications. The contractor shall consult with the sensor manufacturer to ensure that the diaphragm material is compatible with process material where it is installed.

c. Flushing connection: Two ½" connections shall be provided.

d. Teflon gasket shall be provided for lower housing of the pressure element.

4. Manufacturer(s)

a. 3051 Series pressure transmitter with 1199 series diaphragm seal by Rosemount.

b. Deltapilot S DB 50 S series by Endress + Hauser.

c. I/A Series pressure transmitter with PSFLT series diaphragm seal by Foxboro.

2.03 PRESSURE INSTRUMENTS

A. Pressure/Differential Pressure Indicating Transmitter

1. Type:

a. Microprocessor based intelligent type. The process line acts directly on the internally mounted ceramic diaphragm of sensor and deflects it by a very small amount. A pressure-proportional range in the capacitance is measured by the electrodes on ceramic substrate and diaphragm. The transmitter electronics convert this capacitance signal to a 4-20 mA DC signal.

2. Function/Performance

a. Power Requirement: 10.5 to 42.4 VDC. External power supply and power conditioner shall be provided.

b. Output: One analog 4 mA to 20 mA

c. Engineering Units: Flow (MGD or gpm), differential pressure, or gauge pressure depending on the application

d. Accuracy: + 0.1 of the calibrated range or better

e. Stability: Combined temperature effects shall be less than 0.2 % of the maximum span per 50 degrees F temperature change.

f. Operating Pressure Range: 0 to 300 psig

g. Operating Temperature Range: - 40 to 185°F (-40 to 85°C)

h. Operating Humidity Ratio: 0-100 relative humidity %

i. Volumetric Displacement: Less than .005 in3

j. Overpressure: The transmitter shall withstand 1600 psi without damage.

k. Burst Pressure: 10000 psi

3. Physical:

a. Process Connection: Type 316-stainless steel on all water applications. Material shall be compatible with process fluid where the transmitter is installed. The contractor shall consult with the manufacturer for the proper diaphragm material on all chemical applications.

b. Drain/Vent Valve: Type 316-stainless steel on all water applications. Material shall be compatible with process fluid where the transmitter is installed. The contractor shall consult with the manufacturer for the proper diaphragm material on all chemical applications.

c. Process Isolation Diaphragm: Type 316-stainless steel on all water applications. Material shall be compatible with process fluid where the switch is installed. The contractor shall consult with the manufacturer for the proper diaphragm material on all chemical applications.

d. Transmitter Housing Material: NEMA 4X, Type 316-stainless steel. All mounting brackets and hardware shall be 316-stainless steel.

e. Display: In addition to local integral display, remote LCD display and interface shall be provided. The display shall be mounted in an operator accessible location. The transmission cable and all required accessories shall be provided by the manufacturer. Minimum cable length shall be 50 ft.

f. Sensor Fill Fluid: Suitable for the process fluid being measured. When used for chemical metering service, the fill fluid shall be rated for the chemical being measured.

g. Flushing Connection: Two ½" connections shall be provided.

h. Teflon gasket shall be provided for lower housing.

i. Electrical Classification: Intrinsically safe for Class I and Class II, Division 1 locations.

4. Options/Accessories Required:

   a. Provide span and zero adjustment at each transmitter.

   b. Provide hand held programmer(s) as specified under tools and test equipment.

   c. For each transmitter provide a Model SBZ43 manifold as manufactured by D/A Manufacturing Co., Inc, and mounting brackets as required. The manifold shall be Type 316-stainless steel and provide the following modes of operation:

      (1) Normal Mode

      (2) Zeroing Mode

      (3) Isolation Mode

      (4) Calibration Mode

      (5) Blow-down Mode

5. Manufacturer(s)

   a. Rosemount 3051

   b. Foxboro I/A Series

   c. Endress + Hauser

   d. Approved Equal.

B. Pressure Gauge

1. Type:

   a. Bourdon tube style. As the process pressure increases inside the tube, the tube will straighten, causing the tip to deflect. The deflection is transferred to the dial indicator by mechanical linkage.

2. Function/Performance

   a. Pressure Range: As indicated on the contract documents or as listed in the instrument list.

b. Accuracy: 1.6 % of Full Scale

c. Over Range Protection: 125 % of Full Scale
d. Engineering Units: psi or as shown in the drawing or listed in the instrument schedule.

e. Ambient Temperature Range: - 40°F to 140°F (-40°C to 60°C)

f. Operating Process Temperature Range: -4°F to 140°F (-20°C to 60°C)

g. Filling Liquid: Glycerin, silicone, or mineral oil. Filling oil shall be compatible with process fluid where the gauge is installed. The contractor shall consult the manufacturer for the proper fill material used in chemical applications. All gauges shall be filled at the factory.

h. Diaphragm seal shall be provided on all chemical applications.

i. Pointer Travel: Not less than 200°; no more than 270°.

3. Physical:

a. Case Material: Type 316-stainless steel, all-welded construction

b. Pressure element and tip material: Type 316- stainless steel

c. Window: Polycarbonate or laminated shatter-resistance glass window

d. Dial size and materials: 4" diameter, white aluminum with black lettering

e. Pointer Material: Black painted aluminum alloy

f. Process Connection: ½" NPT

4. Options/Accessories Required:

a. Shutoff valve: Each gauge shall have a process shutoff valve, which can also be used as an adjustable pressure snubber.

b. Type 316-stainless steel tag shall be provided.

5. Manufacturer(s)

a. Ametek – U.S. Gauge Division

b. Ashcroft

c. Approved Equal.

C. Pressure/Differential Pressure Switch

1. Type:

a. Diaphragm-sealed piston actuated. Process pressure, acting on the piston, causes it to overcome the adjustment spring force and actuate a snap-action switch.

2. Function/Performance

a. Power requirement: 250 VAC at 15 amps, 30 VDC at 5 amps

b. Alarms: minimum of one SPDT relay

c. Minimum Operating Pressure Range: 0 to 500 psi

d. Ambient Operating Temperature Range: -20 to 150°F (-6 to 65°C).

e. Process Operating Temperature Range: 0 to 200°F (-20 to 100°C).

f. Repeatability: 1.00 % of full scale.

g. Set Point: Field adjustable over the entire range.

h. Dead band:

(1) Pressure Switch: Field adjustable

(2) Differential Pressure Switch: Factory set

i. Instrument shall be provided with automatic reset functionality.

j. Over Range Protection: protection to maximum process line pressure.

k. Diaphragm seal shall be provided on all chemical applications.

3. Physical:

a. Actuator diaphragm seal material: Type 316-stainless steel on all water applications. Material shall be compatible with process fluid where the switch is installed. The contractor shall consult with the manufacturer for the proper diaphragm material on all chemical applications.

b. Housing Material: NEMA 4X (IP 65), Type 316-stainless Steel.

c. Process Connection:

(1) Pressure Switch: 1/2" NPT

(2) Differential Pressure Switch: 1/4" NPT

4. Options/Accessories Required:

a. Shutoff valve: Each gauge shall have a process shutoff valve, which can also be used as an adjustable pressure snubber.

b. Type 316-stainless steel tag shall be provided.

5. Manufacturer(s)

a. Static-O-Ring (SOR)

b. Ashcroft

c. Approved Equal

D. Diaphragm Seal – Planar Type

1. Type:

a. A flexible diaphragm used to separate the process fluid and pressure instrument in order to protect the instrument wetted parts. The space on the instrument side of the diaphragm shall be completely filled with a suitable pressure transmitting fluid. Process pressure, acting on the diaphragm and the transmitting fluid, forces the pressure instrument (gauge or switch) to respond.

2. Function/Performance

a. If flanged process connection is used, ANSI Class 150/300 flange shall be provided. The diaphragm seal shall be attached to the flange as specified in ASME 16.5. The instrument supplier shall coordinate with the process piping contractor.

b. Welded metal, bonded elastomer, or bonded thermoplastic diaphragm.

c. Operating Pressure Range: 0 to 500 psi

d. Operating Process Temperature Range: -40°F to 300°F (-40°C to 200°C)

3. Physical:

   a. Top Housing: Type 316-stainless steel

   b. Diaphragm Material: Type 316-stainless steel on all water applications. Material shall be compatible with process fluid where the switch is installed. The contractor shall consult with the manufacturer for the proper diaphragm material on all chemical applications.

   c. Bottom Housing Material: Type 316-stainless steel on all water applications. Material shall be compatible with the process fluid where the diaphragm seal is installed. The contractor shall consult with the manufacturer for the proper bottom housing material on all chemical applications.

   d. Bolts, Nuts and Plugs: Type 316-stainless steel

   e. Process Connection: ½" NPT

   f. Sensing fill fluid: Silicone

4. Options/Accessories Required:

   a. Flushing Connection: flushing connection and plug shall be provided on all units. Plug shall be of same material as bottom housing.

5. Manufacturer(s)

   a. Ashcroft - 200 series diaphragm seals

   b. Approved Equal.

E. Diaphragm Seal – Annular (Concentric) Type

1. Type:

   a. Wafer or spool-design flexible diaphragm used to separate the process fluid and pressure instrument in order to protect the instrument wetted parts. The line of pressure is sensed 360° around the full inside circumference of the pipeline. The captive fluid is displaced through the pressure sensor body to the pressure instrument.

2. Function/Performance

a. The pressure sensor shall be full flange and flow-through design with flexible elastomer sensing ring around the full circumference.

b. The elastomer sensing ring shall be rigidly clamped between metal and cover flanges.

c. The pressure sensor shall be designed to fit between standard ANSI B16.1, Class 150 or 300 pipeline flanges. Flange bolts shall pass through sensor body and flanges.

d. Face-to-face of the entire sensor shall be no longer than specifications MSS-SP67 (Military Sensing Symposia-Standard Practice 67).

e. Minimum Operating Pressure: Limited only by ASME flange pressure limitations.

f. Operating Process Temperature Range: Up to 350°F (170°C).

3. Physical:

a. Assembly flanges Material of Construction: Type 316 stainless steel on all water applications. Material shall be compatible with process fluid where the sensor is installed. The contractor shall consult with the manufacturer for the proper diaphragm material on all chemical applications.

b. Sensor Material of Construction: Shall be compatible with the physical and chemical properties of the process fluid.

c. Filling Liquid: Shall be compatible with the physical and chemical properties of the process fluid.

d. Process Connection: As noted in loop diagrams or piping drawings. Flanged for piping greater than 2", threaded NPT or flanged for piping 2" or smaller. Coordinate with piping contractor.

e. Pressure Instrument Connection: ½" to 2" depending on the pressure instrument specified.

4. Manufacturer(s)

a. Ashcroft: Type 80 isolation ring, Type 85 isolation spool, or Type 86 isolation spool

b. Red Valve: Series 40, Series 48, Series 42, or series 742 diaphragm isolators

PART 3: EXECUTION

3.01 GENERAL

A. See execution requirements in Section 13300.

END OF SECTION

Section 13325

CONTROL PANELS AND PANEL MOUNTED EQUIPMENT

PART 1: GENERAL

1.01 SCOPE OF WORK

A. Refer to Section 13300.

B. Furnish and install control panels and panel mounted equipment as specified herein and shown on the Contract Drawings.

C. All new panels and panel components shall match existing equipment makes and models wherever possible, so that system additions can be most easily integrated with respect to operation and maintenance training, spare parts inventory, and service contracts. Even when exact matches are not possible, equipment furnished must be fully compatible with the existing system. Color, size and material of new panels should conform to that of existing panels.

D. Panels and consoles shall be furnished by the Process Control System Integrator (PCSI). Each panel shall be supplied with full sub-panels and side panels as required.

E. All new control panels provided under this contract and their locations are shown on the electrical drawings. Panels NEMA rating classification shall be maintained as shown on the electrical drawings.

1.02 RELATED WORK

A. General instrumentation and control requirements are included in Section 13300.

B. Electrical requirements are included in Division 16.

C. Specific control panel components, terminal blocks, controllers, and other general devices are specified in other Sections of Division 13.

1.03 SUBMITTALS

A. Refer to Section 01330 and 13300.

1.04 REFERENCE STANDARDS

A. Refer to Section 16161

1.05 QUALITY ASSURANCE

A. Product Conformance Certificate and Quality Assurance Release. Submit an overall conformance certificate for electrical components signed by the person responsible for product quality. Specifically identify the purchased material or equipment by project name and location, purchase order number, supplements, and item number where applicable, including materials and services provided by others. Indicate that all requirements have been met and identify any approved deviations.

1.06 SYSTEM DESCRIPTION

A. Refer to Section 13300.

1.07 DELIVERY, STORAGE AND HANDLING

A. Refer to Section 13300.

B. Accessories, drawings, instruction bulletins, etc., shall be packed and shipped with the panel.

1.08 PROJECT/SITE REQUIREMENTS

A. Refer to Section 13300.

1.09 MAINTENANCE

A. Refer to Section 13300.

B. Spare Parts: In addition to the spare parts listed in other instrumentation sections, provide the following:

1. Fuses: 20 percent of each size and type used, but no less than 10 of each size and type.

2. Relays: 20 percent of each type used, but no less than 10 of each type.

3. DC Power Supplies: 20 percent of each size and type used, but no less than two of each size and type.

4. Corrosion Inhibiting Vapor Capsules: Provide 100 of each type and size used.

C. The spares listed above shall be packed in a manner suitable for long term storage and shall be adequately protected against corrosion, humidity and temperature.

1.010 WARRANTY

A. Refer to Section 13300.

1.011 SYSTEM FINAL DOCUMENTATION

A. Refer to Section 13300.

PART 2: PRODUCTS

2.01 GENERAL

A. Refer to Section 13300.

2.02 LIGHTNING/SURGE PROTECTION

A. Refer to Section 13300.

2.03 CONTROL PANEL GENERAL REQUIREMENTS

A. All control panel assemblies shall be UL labeled. The PCSI shall be responsible for ensuring final enclosure sizing and panel arrangements accommodate all required equipment for a fully integrated and operational system as specified herein and in the Contract Documents.

B. All panel doors shall have a lock installed in the door handle, or a hasp and staple for padlocking. Locks for all panels provided under this Contract shall be keyed alike.

C. The instruments designated for rear of panel mounting shall be arranged within the panel according to respective panel drawings and in a manner to allow for ease of maintenance and adjustment.

D. The panels shall be completely fabricated, instruments installed and wired at the PCSI's facility.

E. All components shall be mounted in a manner that shall permit servicing, adjustment, testing and removal without disconnecting, moving or removing any other component. Components mounted on the inside of panels shall be mounted on removable plates and not directly to the enclosure. Mounting shall be rigid and stable unless shock mounting is required otherwise by the manufacturer to protect equipment from vibration. Internal components shall be identified with suitable plastic or metal engraved tags attached with drive pins adjacent to (not on) each component identifying the component in accordance with the drawing, specifications, and PCSI's data.

F. All exterior panel mounted equipment shall be installed with suitable gaskets, faceplates, etc. required to maintain the NEMA rating of the panel.

G. Nameplates

1. All panels and panel devices shall be supplied with suitable nameplates which identify the panel and individual devices as required. Each device nameplate shall include up to three lines with the first line containing the device tag number as shown on the Contract Drawings, the second line containing a functional description (e.g., Booster Pump No. 1), and the third line containing a functional control description (e.g., Start).

2. Unless escutcheon plates are specified or unless otherwise noted on the Contract Drawings, nameplates shall be 3/32 inch thick, black and white, Lamacoid with engraved inscriptions. The letters shall be black against a white background. Edges of the nameplates shall be beveled and smooth. Nameplates with chipped or rough edges will not be acceptable. Nameplates shall be affixed to the panels using 4-40 thread stainless steel button head hex screws.

H. Mounting Elevations

1. ISA Recommended Practice RP60.3 shall be used as a guide in layout and arrangement of panels and panel mounted components. Dimensions shall account for all housekeeping pads that panels will be placed on when installed.

2. Centerline of indicators and controllers shall be located no lower than 48 inches or higher than 66 inches above the floor on a panel face.

3. Centerline of lights, selector switches and pushbuttons shall be located no lower than 32 inches or higher than 70 inches above the floor on a panel face.

4. Tops of annunciators shall be located no higher than 86 inches above the floor on a panel face.

5. Installation of panel components shall conform with component manufacturers' guidelines.

2.04 PANEL MATERIALS AND CONSTRUCTION

A. Structure and Enclosure

1. Panels shall be of continuous welded steel construction. Provide steel angle stiffeners as required on the back of the panel face to prevent panel deflection under instrument loading or operation. Internally the panels shall be supplied with a structural steel framework for instrument support purposes and panel bracing. The internal framework shall permit panel lifting without racking or distortion. Provide removable lifting rings designed to facilitate simple, safe rigging, and lifting of the control panels during installation. Plugs shall be provided and shall unobtrusively fill the panel lifting ring holes when substituted for the lifting rings after installation is complete. Plugs shall not compromise the overall NEMA rating of the panel.

2. Each panel shall be provided with full height, fully gasketed access doors where shown. Doors shall be provided with a three point stainless steel latch and heavy duty stainless steel locking handle. Rear access doors shall be conveniently arranged and sized such that they extend no further than 24 inches beyond the panel when opened to the 90 degree position. Front and side access doors shall be as shown. Panel access doors shall be provided with full length, continuous, piano type, stainless steel hinges with stainless steel pins. Front access doors with mounted instruments or control devices shall be of sufficient width to permit door opening without interference from flush mounted instruments.

3. The panels, including component parts, shall be constructed and assembled in a thoroughly workmanlike manner and shall be free from sharp edges and welding flaws. Wiring shall be free from kinks and sharp bends and shall be routed for easy access to other components for maintenance and inspection purposes.

4. The panel shall be suitable for top or bottom conduit entry as required by the Electrical Drawings. For top mounted conduit entry the panel top shall be provided with nominal one foot square removable access plates which may be drilled to accommodate conduit and cable penetrations. All conduit and cable penetrations shall be provided with ground bushings, hubs, gasketed locknuts, or other accessories as required to maintain the NEMA rating of the panel and electrical rating of the conduit system.

5. All panels in indoor, dry, non-corrosive environments shall be NEMA 12 unless otherwise noted. All panels in outdoor, wet or chemically corrosive environments shall be NEMA 4X Type 316 stainless steel unless otherwise noted. All panels located in hazardous locations (e.g., Class 1, Division 1) shall be rated NEMA 7.

6. All panels in chlorine storage building areas shall have an air purge system confirming to NFPA – 496. A minimum of 0.1 inch of klater colosum shall pressurize the enclosure. The enclosure and related appurtenances shall be labeled.

B. Freestanding Vertical Panels

1. Freestanding vertical panels shall meet the NEMA classification as shown on the Contract Drawings or specified herein. The panels shall be constructed of 12 gauge sheet steel, suitably braced internally for structural rigidity and strength. Front panels or panels containing instruments shall be not less than 10 gauge stretcher leveled sheet steel, reinforced to prevent warping or distortion.

C. Wall or Unistrut Mounted Panels

1. All wall mounted panels shall meet the NEMA classification as shown on the Contract Drawings or specified herein. The panels shall be constructed of not less than USS 14 gauge steel, suitably braced internally for structural rigidity and strength. All NEMA 4X rated wall mounted panels shall be constructed of 316 stainless steel, unless chlorine storage areas where FRP is to be provided. All FRP

panels located in direct sunlight shall be provided with a protective coating and sun shield to prevent discoloration and cracking.

D. Finish Requirements

1. All sections shall be descaled, degreased, filled, ground and finished. When fabricated of steel, the enclosure shall be finished with two rust resistant phosphate prime coats and two coats of enamel, polyurethane, or lacquer finish which shall be applied by either hot air spray or conventional cold spray methods. Brushed anodized aluminum, stainless steel, and FRP panels will not require a paint finish.

2. The panels shall have edges ground smooth and shall be sandblasted and then cleaned with a solvent. Surface voids shall be filled and ground smooth.

3. Immediately after cleaning, one coat of a rust inhibiting primer shall be applied inside and outside, followed by an exterior intermediate and top coat of a two component type epoxy enamel. A final sanding shall be applied to the intermediate exterior coat before top coating.

4. Apply a minimum of two (2) coats of flat white lacquer on the panel interior after priming.

5. Unless otherwise noted, the finish exterior colors shall be ANSI 61 gray with a textured finish.

2.05 ENVIRONMENTAL CONTROL

A. All panels shall be provided with louvers, sun shields, heat sinks, forced air ventilation, or air conditioning units as required preventing temperature buildup inside of panel. The internal temperature of all panels shall be regulated to a range of 45 Deg F to 104 Deg F under all conditions. Under no circumstances shall the panel cooling or heating equipment compromise the NEMA rating of the panel.

B. Submit heat dissipation calculations for every new control panel.

C. Except for panels mounted with their backs directly adjacent to a wall, louvers shall be in the rear of the panels, top and bottom, and shall be stamped sheet metal construction. If louvers cannot be installed to maintain the required panel NEMA rating, other means must be provided to maintain temperature limits as specified.

D. For panels mounted with their backs directly adjacent to a wall, louvers shall be on the sides.

E. In conditioned areas without chemicals, such as chlorine, provide forced air ventilation fans, to provide a positive internal pressure within the panel and shall be provided with washable or replaceable filters. Fan motors shall operate on 120 volt, 60 Hz power.

F. An air conditioner shall be provided for panels with internal heat that cannot be adequately dissipated with natural convection and heat sinks, or forced air ventilation.

G. The air conditioner shall have fully gasketed flanges on all four mounting edges for a watertight seal that maintain the NEMA rating of the enclosure. The air conditioner shall have a thermostatic low temperature control to provide energy efficient operation and prevent over cooling. The AC shall also have EMI/RFI suppressor to minimize transient spikes during compressor on/off cycling and it shall be short cycle protected. The AC enclosure shall be Stainless Steel and UL certified.

H. Provide custom fabricated sun shields for all outdoor panels in accordance with the following requirements:

1. Sun shields shall be fabricated from minimum 12 gage Type 316 Stainless Steel. Units shall be designed, fabricated, installed and supported to fully cover and shade the top, sides and back of the enclosure, and to partially shade the front panel of the enclosure from direct exposure to sunlight from sunrise to sunset.

2. Depending on overall size, sun shields may be fabricated in single or multiple segments for attachment to the enclosure support framing or to separate free standing framing around the enclosure.

3. Sun shields shall not be attached directly to the enclosure by drilling holes through, or welding studs to, the enclosure surfaces, and shall be designed and mounted to provide a minimum 3 inch air gap all around the enclosure for air circulation and heat dissipation.

4. The top section of all sun shields shall be sloped at a minimum angle of 5 degrees from horizontal. For wall mounted enclosures, the top section shall slope downward away from the wall and towards the front of the enclosure. For free standing, floor mounted and frame mounted enclosures, the top section shall slope downward towards the back side of the enclosure.

5. The front edge of the top section of all sun shields shall incorporate a narrow and more steeply sloped drip shield segment which sheds water away from the front of the enclosure and prevents it from dripping and/or running directly onto the front panel of the enclosure.

6. All seam welds used in sun shield fabrication shall be continuous and ground smooth.

7. All exposed corners, edges and projections shall be smooth rounded or chamfered to prevent injury.

I. All enclosures shall be provided with a thermostatically controlled strip heater to reduce condensation and maintain the minimum internal panel temperature. Strip heaters shall be mounted close to the bottom of the panel on a vertical plane.

2.06 CORROSION CONTROL

A. Panels shall be protected from internal corrosion by the use of corrosion inhibiting vapor capsules as manufactured by Northern Instruments Model Zerust VC; Hoffman Model A HCI; or equal.

2.07 CONTROL PANEL INTERNAL CONSTRUCTION

A. Internal Electrical Wiring

1. All interconnecting wiring shall be stranded, type MTW, and shall have 600 volt insulation and be rated for not less than 90 degrees Celsius. Wiring for systems operating at voltages in excess of 120 VAC shall be segregated from other panel wiring either in a separate section of a multi-section panel or behind a removable Plexiglas or similar dielectric barrier. Panel layout shall be developed such that technicians shall have complete access to 120 VAC and lower voltage wiring systems without direct exposure to higher voltages.

2. Power distribution wiring on the line side of fuses or breakers shall be 12 AWG minimum. Control wiring on the secondary side of fuses shall be 18 AWG minimum. Electronic analog circuits shall utilize 18 AWG shielded, twisted pair, cable insulated for not less than 600 volts.

3. Power and low voltage DC wiring systems shall be routed in separate wireways. Crossing of different system wires shall be at right angles. Different system wires routed parallel to each other shall be separated by at least 6 inches. Different wiring systems shall terminate on separate terminal blocks. Wiring troughs shall not be filled to more than 60 percent visible fill.

4. Signal wires shall be tinned copper type. All wiring shall terminate onto a single tier master terminal board, where each terminal is uniquely and sequentially numbered. Direct interlock wiring between equipment will not be allowed. Multi-level terminal blocks or strips are not acceptable. The master terminal board shall have a minimum of 25 percent spares. Terminal blocks shall be arranged in vertical rows and separated into groups (power, AC control, DC signal). Terminal blocks shall be the compression type, fused, unfused, or switched as shown on the Contract Drawings or specified elsewhere in Division 13.

   a. Discrete inputs and outputs (DI and DO) shall have two terminals per point with adjacent terminal assignments. All active and spare points shall be wired to terminal blocks.

   b. Analog inputs/outputs (AI and AO) shall have three terminals per shielded pair connection with adjacent terminal assignments for each point. The third terminal is for shielded ground connection for cable pairs. Ground the shielded

signal cable at the PLC cabinet. All active and spare points shall be wired to terminal blocks.

c. Wire and tube markers shall be the sleeve type with heat impressed letters and numbers.

d. Only one side of a terminal block row shall be used for internal wiring. The field wiring side of the terminal block shall not be within 6 inches of the side panel or adjacent terminal, 8-inches of the bottom of free standing panels, or 3-inches of stanchion mounted panels.

5. All wiring to hand switches, etc., which are live circuits independent of the panel's normal circuit breaker protection shall be clearly identified as such.

6. All wiring shall be clearly tagged and color coded. All tag numbers and color coding shall correspond to the panel wiring diagrams and loop drawings prepared by the PCSI.

7. All power wiring, control wiring, grounding and DC wiring shall utilize different color insulation for each wiring system used. The color coding scheme shall be:

   a. Incoming 120 VAC Hot - Black

   b. 120 VAC Hot wiring downstream of panel circuit breaker – Red

   c. 120 VAC Hot wiring derived from a UPS system – Red with Black stripe

   d. 240, 208 or 480 VAC wiring – as specified in Division 16

   e. 120 VAC neutral - White

   f. Ground - Green

   g. DC wiring – Blue and Blue/White

   h. Foreign voltage - Yellow

8. Provide surge protectors on all incoming power supply lines at each panel per the requirements of Section 13300.

9. Each field instrument furnished under Division 13 and shown on the Contract Drawings as deriving input power from the control panel(s) shall have a separate power distribution circuit with a circuit breaker or fuse and blown fuse indication. Provide 24 VDC power supplies as required to power field instruments and panel devices.

10. Wiring trough for supporting internal wiring shall be plastic type with snap on covers. The side walls shall be open top type to permit wire changing without

disconnecting. Trough shall be supported to the subpanel by stainless steel screws. Trough shall not be bonded to the panel with glue or adhesives.

11. Each panel shall have a single tube, fluorescent light fixture, 20 Watt in size, mounted internally to the ceiling of the panel. Light fixture shall be switched and shall be complete with the lamp.

12. Each panel shall have a specification grade duplex convenience receptacle mounted internally within a stamped steel device box with appropriate cover.

13. Each panel shall be provided with an isolated copper grounding bus for all signal and shield ground connections. Shield grounding shall be in accordance with the instrumentation manufacturer's recommendations.

14. Each panel shall be provided with a separate copper power grounding bus (safety) in accordance with the requirements of the National Electrical Code.

15. Each panel shall have control, signal and communication line surge suppression in accordance with Section 13300.

16. All microprocessor-based electronic devices in the panel that are powered by 120VAC shall be powered by the UPS (refer to Section 16950).

17. Each panel shall be provided with a circuit breaker to interrupt incoming power. Provide a minimum of two (2) spare 20-amp breakers.

18. Additional electrical components including transformers, motor starters, switches, circuit breakers, etc. shall be in compliance with the requirements of Division 16.

B. Pneumatic Tubing

1. Refer to Section 13300.

2. Pneumatic tubing, if required, shall be a minimum of 1/4 inch O.D. Type 316 stainless steel with compression fittings. All tubing shall be rigidly supported and run in horizontal or vertical planes.

3. All pneumatic equipment shall be provided with separate shut off valves. Flexible polyethylene tubing shall be used on all devices mounted on hinged doors, etc.

4. A screened vent shall be provided on all enclosures using pneumatic instruments.

5. All pneumatic tubing shall be routed in separate bundles or wireways, and shall be separated from ALL electrical wiring by a minimum of 3-inches.

C. Relays not provided under Division 16 and required for properly completing the control function specified in Division 13, Division 16, or shown on the Contract Drawings shall be provided under this Section.

D. Print storage pockets shall be provided on the inside of each panel. The storage pockets shall be steel, welded on to the door, and finished to match the interior panel color. The storage pocket shall be sufficient to hold all of the prints required to service the equipment, and to accommodate 8.5 inch by 11 inch documents without folding.

PART 3: EXECUTION

3.01 INSTALLATION

A. The panels shall be installed at locations as shown on the Contract Drawings.

B. Refer to Section 13300.

3.02 TESTS

A. All panels shall be tested as part of the complete system factory and site testing procedures as specified in Section 13300.

END OF SECTION

SECTION 13430

SYSTEM REQUIREMENTS

PART 1: GENERAL

1.01 SUMMARY

A. Provide and install instrumentation, control system and SCADA improvements and/or modifications as described in the specifications and as indicated on Project Drawings. The hardware configuration of the system shall match the style and concept of the existing system, however, hardware components will typically be the most recently available versions of the components used.

1.02 MEASUREMENT AND PAYMENT

A. Payment is on a lump sum basis and includes all materials, equipment, labor, and testing for a complete and functional installation as indicated on Project Drawings and described in the specifications.

PART 2: PRODUCTS

2.01 GENERAL

A. Hardware components, equipment, and related items for instrumentation, control and SCADA systems shall be as indicated on the Project Drawings and in the specifications.

2.02 HUMAN MACHINE INTERFACE (HMI)

A. Software Engineer shall provide plant HMI with proposed Siemens software.

PART 3: EXECUTION

3.01 PROGRAMMABLE LOGIC CONTROLLER (PLC) PROGRAMMING

A. PLC programming ahall be performed by the SE (Software Engineer) as required by Specification 13441.

B. This project will use Siemens S7-1513 PLCs for the main PLC and a Siemens S7-1200 PLC for booster pumps, water wells, generators, etc. New PLC programs shall be written by the SE for this project based on the City's existing programming philosophy.

C. Each main PLC shall include load shed programming which will limit running loads to available power capacity. For locations with on-site standby generators, available power capacity is either available capacity from the power company or available capacity from generators if power from the power company is not available. For locations without on-site standby generators, available power capacity is the capacity available from the power company or available capacity from the expected size of mobile generator provided by COH.

3.02 HUMAN MACHINE INTERFACE (HMI) PROGRAMMING

A. HMI programming shall be performed by the SE (Software Engineer) as required by Specification 13441.

B. A Siemens TP1200 Comfort Panel will be used for HMI at the main PLC location at the water pump station locations in this project. New HMI programs shall be written by the SE for this project based on the City's existing programming philosophy.

3.03 PROGRAMMING AT EWPP CONTROL ROOM AND OTHER LOCATIONS.

A. The SE (Software Engineer) shall provide files for each water pump station in this project and assist the City in programming and HMI updates to workstations at the East Water Purification Plant (EWPP) Control Room and at the Sabine Street Control Room." as "A. The SE (Software Engineer) shall provide files for each water pump station in this project and, if necessary, assist the City in deploying the HMI updates to workstations at the East Water Purification Plant (EWPP) Control Room, Sabine Street Control Room and the WebSpace server at Ardmore.

END OF SECTION

Section 13441

SCADA SOFTWARE ENGINEERING SECURITY AND QUALITY REQUIREMENTS

PART 1: GENERAL

1.01 PURPOSE

A. This document communications the requirements for SCADA software used for the control and monitoring of DWO (Drinking Water Operations) facilities. These requirements are intended to address three related areas: 1) SCADA Homeland Security Requirements, 2) Texas Engineering Practice Act, 3) COH DWO SCADA system quality requirements:

1. According to the National Strategy for Homeland Security water treatment and production facilities are part of the nation's critical infrastructure and the government agencies that are responsible shall take specific steps to improve SCADA security.

    a. Government agencies are required to "Establish policies to minimize the likelihood that organizational personnel will inadvertently disclose sensitive information regarding SCADA system design, operations, or security controls" and "Release data related to the SCADA network only on a strict, need-to-know basis, and only to persons/entities explicitly authorized to receive such information".

    b. In compliance with these Homeland Security requirements all SCADA related information is restricted to authorized personnel.

2. In compliance with Texas Engineering Practice Act (Article 3271a) and the recognition that SCADA software is an integral part of the electrical control of the water treatment and production facilities and is therefore within the jurisdiction of the act:

    a. All SCADA software related work shall be performed by a licensed engineering firm meeting the qualifications as specified in these requirements and referred to within as the Software Engineer (SE). The software produced for the project shall be stamped by the SE in accordance with (Article 3271a §137.33 Sealing Procedures for engineering software).

3. Additionally, these requirements are to refine and perpetuate software engineering and software quality standards that will benefit DWO in the areas of facility operations, maintenance, and facility construction projects:

    a. The requirements are intended to benefit facility operations through encouraging SCADA standards of consistency in facility functionality and operation, improved

process visibility, improved efficiency and control, lower operating costs and reduced potential permit violations. The SCADA standardization also addresses improved technical support and ease of maintenance.

b. These requirements specify SCADA related issues in construction, deliverables and qualifications that will help ensure the availability and quality of SCADA system integration.

c. SCADA related software integration activities have been identified as a key point of quality control for construction projects. The SE shall subcontract directly to the general contractor and shall perform an independent assessment of the SCADA related work of the other subcontractors and equipment suppliers to ensure complete system and software integration within the facility per the construction specification and DWO SCADA design guidelines.

1.02 MEASUREMENT AND PAYMENT

A. No separate payment will be made under this section. Include the cost for this work in the lump sum base bid.

PART 2: PRODUCTS

2.01 SCOPE

A. The requirements defined in this document apply to DWO SCADA software including system control, monitoring and integration. The scope includes new and existing facility construction projects where new SCADA software is required or where the existing SCADA software is modified.

B. SCADA software activities shall be performed only by the pre-approved SE and include: PLC programming, HMI configuration and graphics development, historical logging software application and report generation, network configuration and programming.

C. Manufactured packaged subsystems with pre-engineered software may be specifically excluded if specified in that subsystem equipment specification, that the system shall be shipped with the software as a fully functional unit. The system PLC and HMI hardware and software application shall meet the requirements for SCADA integration and software documentation. The packaged system provider shall deliver all software to SE as soon as possible for the purpose of review and integration.

D. These requirements apply to all SCADA security related activities including configuration of servers, workstations and network equipment.

PART 3: EXECUTION

3.01 SOFTWARE ENGINEERING REQUIREMENTS

A. The SE shall perform the software engineering functions as required by the scope of work.

B. The SE shall use the City of Houston standards for SCADA software engineering and Homeland Security in all work performed.

1. The SE shall identify and communicate omissions and required modifications to these standards.

2. Details on these standards are restricted to authorized personnel only according to the Homeland Security requirements and are not included in these requirements. The pre-approved SE is authorized for access to these standards.

C. The SE shall provide the SCADA related submittals as defined in the submittals section.

D. The SE shall perform the work required to complete the required SCADA software submittals.

E. The SE shall review and report on the SCADA related submittals of the project subcontractors and equipment providers.

F. The SE shall assist the project team including; the engineer, the water operations and equipment suppliers with the SCADA integration issues.

G. The SE shall attend project meetings as required by the project team.

H. The SE shall assist the project team with functional test of the system.

1. This may include providing project related process data from the SCADA system.

PART 4: MODIFICATIONS

4.01 SUBMITTALS

A. Within 30 days of the notice to proceed the SE shall submit a letter of SE qualifications specifically addressing each item of qualification as defined in these requirements.

B. Include the SE professional engineering firm licensed number and date of issuance.

C. Include a statement addressing the awareness of the Homeland Security concerns and intention to restrict the dissemination of security sensitive SCADA network information to those who are authorized by the COH and require the information in the support of this project.

D. Within 90 days of the notice to proceed the SE will submit the Software Engineering Manual (Preliminary Report).

E. Include the software conventions for the use in the HMI development.

F. Include diagrams and schedules for all network devices associated with the process control and monitoring for the facility/facilities.

G. Include the interfaces for the City SCADA network.

H. Identify every network component (new and existing).

I. The Software Engineering Manual will be updated for the final O&M.

J. The SE will submit letters of software and network integration compatibility to be included in all the control related submittals.

K. Included but not limited to: PLCs, network devices, computers, HMI devices.

L. Include deviations from City standards and the construction specifications for electrical control drawings and tag naming conventions.

M. Include deviations from the submitted Software Engineering Preliminary Report.

N. Include the manufacturer supplied package systems with control panels.

O. The SE shall distribute monthly a Software Engineering Integration Schedule highlighting software and system integration progress and issues.

4.02 FACTORY DEMONSTRATION TEST CONFIRMATION REPORT

A. After the required factory demonstration test the SE shall submit a report confirming the related software and network compatibility.

4.03 FIELD ACCEPTANCE FUNCTIONAL TEST

A. Shall be completed prior to performance and reliability testing.

B. Field Acceptance Functional Test Submittals shall include:

1. Field Acceptance Functional Test Plan Submittal.
2. Description of plan for testing field devices.
3. Description of plan for function test and system integration of each subsystem.
4. Field Acceptance Functional Test Schedule shall be submitted after the acceptance of the test plan submittal.
5. Field Acceptance Functional Test plan completion report shall be submitted.

4.04 UPDATED SOFTWARE ENGINEERING MANUAL (FINAL VERSION)

A. Update and submit a single flash drive with all related SCADA software.

B. Control and network components.

C. Inventory of software components.

D. Network device configuration documentation.

E. Software Engineering documentation.

F. PLC and HMI software shall be documented using the product development tool.

G. Software shall be stamped as required in Texas Engineering Practice Act (Article 3271a §137.33 Sealing Procedures) with the date, the engineers name, the PE designation with license number.

H. The SE will collect and submit all software and network device configuration programs and data developed for the project.

PART 5: SOFTWARE ENGINEER (SE) QUALIFICATIONS

A. DWO has set forth these qualifications for performing all SCADA related software activities as defined in these requirements.

B. The SE shall be pre-approved by DWO no later than fourteen (14) days prior to the project bid opening date for construction projects.

5.01 SPECIFIC QUALIFICATIONS FOR PRE-APPROVED SE

A. The SE shall be a Texas Registered Professional Engineering firm with a minimum of five (5) years of licensed history. Software Engineering, Control systems Engineer or

Electrical Engineering Licences are preferred. Experience with water treatment and production facilities is required.

B. The SE shall be experienced with the software application development packages which are used as standards for DWO, including a minimum three (3) years of software engineering experience with G.E. IFIX HMI application development packages and Siemens PLCs.

C. The SE shall demonstrate a minimum of three (3) years of continuous Cisco Advanced Security expertise. This ensures the SE has the required expertise to configure, secure and maintain the SCADA system network for applicable projects.

D. The SE shall have errors and omissions insurance with coverage in the amount of $1,000,000.00 (aggregate).

E. The SE shall have an existing office, within the City of Houston, and shall maintain that office for the duration of the warranty and extended software service requirement.

F. To ensure effectiveness and objectivity in the review and reporting of SCADA related integration issues, the SE shall be an independent entity and provide only software engineering services for the construction projects. Additional scope of automation and electrical services may be provided as required by the owner. The services may include, but not limited to network diagram development, efficiency and optimization program and application implementation, data dictionary design guideline development.

END OF SECTION

SECTION 14622

ELECTRIC HOIST AND MOTORIZED TROLLEY

PART 1 GENERAL

1.01 SUMMARY

A. Furnish a single girder bridge crane with a 2-ton electric hoist chain and motorized trolley as specified herein.

1.02 MEASUREMENT AND PAYMENT

A. Payment for electric hoist and motorized trolley is on a unit price basis for each. Payment includes labor, equipment, and materials for installation of the hoist, trolley, bridge and all components under this section.

1.03 SUBMITTALS

A. General

1. Comply with the requirements of Section 01330 when preparing and making submittals described in this section.

2. Submit the product data and shop drawings specified below in a single package. Partial submittals will not be reviewed.

B. Submit the following product data:

1. Catalog cuts describing equipment specified in this section and control equipment supplied with same. Mark through inapplicable information;

2. Data sheets addressing all performance requirements specified in this section;

3. Data sheets addressing all product features such as materials of construction, design features, factory coatings, and accessories specified in this section;

4. Manufacturer's installation instructions; and

5. Manufacturer's O&M data.

1.04 QUALITY ASSURANCE

A. Obtain all items specified herein from a single source to ensure that all components are compatible and work together to form a properly functioning system.

PART 2 PRODUCTS

2.01 MANUFACTURERS

A. Proserv Anchor

B. Budgit USA Army Type Trolley Hoist

C. Or approved equal.

2.02 DESIGN CRITERIA

Design Criteria	Hoist	Trolley	Bridge
Type	Electric Chain	Fixed Axle	Fixed Axle
Capacity	2 ton	2 ton	2 ton
Full Load Speed	8 fpm	40 fpm	40 fpm
Motor Size	1 hp	1/2 hp	1/3 hp
Motor Rating	30 min., Class F	30 min., Class F	30 min., Class F
Motor Type	TENV	TENV	TENV
Control	Single speed	Single speed	Two step VFD
Maximum Wheel Load	-	-	2,800 lbs

2.02 BRIDGE

A. The bridge shall be top running single girder type with an approximate span of 18'-0".

B. Bridge shall be driven by dual 460 V, three phase, 60 Hz, 1/3 hp motors.

2.03 TROLLEY

A. The trolley hoist shall have a lug suspension to permit a rigid mount trolley to be attached to the hoist making up the trolley hoist unit.

B. Trolley shall be driven by a 460 V, three phase, 60 Hz, ½ hp motor.

2.04 HOIST

A. The trolley hoist shall have a lug suspension to permit a rigid mount trolley to be attached to the hoist making up the trolley hoist unit.

B. Trolley hoist shall be driven by a 460 V, three phase, 60 Hz, 1 hp motor.

C. Maximum Distance from trolley beam to hook with hoist in full up position: 24 inches

D. Maximum Distance from floor to hook in full up position (Lift): 10 feet

E. Chain Lengths: To suit installation as shown on Drawings with bottom of chain 3 feet above floor.

2.03 FRAME

A. Frame shall be impact resistant, lightweight, heat-treated, permanent mold cast aluminum alloy.

B. The frame shall be heavily proportioned, designed primarily for rigidity to hold the gears and bearings in close alignment.

C. The frame with the covers shall enclose all operating parts protecting them from dirt and the weather.

2.04 OVERLOAD DEVICE

A. The chain wheel, in addition to having pockets accurately formed to receive the links of the hand chain, shall form part of an overload device.

B. The overload device shall be calibrated for the capacity of the hoist and factory installed as an added measure of protection for the load, hoist and operator.

2.05 GEARING

A. The gearing shall be straight spur for good efficiency.

B. The gears and pinions shall be generously proportioned and precision cut from alloy steel and heat-treated for maximum strength and durability.

C. All gears shall be grease packed in a grease-tight gear case.

2.06 LOAD BRAKE

A. The automatic, screw actuated, Weston-type load brake shall hold the load under all conditions and permit fine smooth control in lowering.

B. The brake shall be self-adjusting with the friction washers long wearing, requiring low maintenance.

2.07 LOAD SPROCKET

A. The load sprocket and sprocket gear shall be machined from one-piece steel forging.

B. The chain guide shall be heat-treated, spring steel, flexible guide that provides heat-treated smooth surfaces that flex in the frame, controlling the load without binding.

2.08 LOAD CHAIN

A. Closely calibrated chain links of special analysis alloy steel formed and heat-treated for unusual strength, carbonized for long wear and usage.

B. The links shall be accurately formed to fit the pockets of the load sprocket.

C. The chain links shall be accurately formed to fit the pockets of the chain wheel, for gag-resistant operation in the chain wheel and guide arrangement.

2.10 HOOKS

A. The hooks shall be drop forged steel and tough and ductile so they will open noticeably when subjected to excessive overload.

B. The hooks shall be full swiveling with each equipped with a spring type hook latch.

2.11 SPARK AND CORROSION RESISTANCE

A. Spark and corrosion resistant hoists shall be used for service in certain hazardous atmospheres and areas where resistance to friction sparks is vitally important.

B. Spark and corrosion hoists shall have bronze alloy hooks, bronze block sleeve or aluminum lower block, special chrome nickel stainless steel alloy load chains, and aluminum or bronze hand chains.

PART 3 EXECUTION

3.01 INSTALLATION

A. Install equipment in accordance with the Drawings, approved shop drawings and the manufacturer's installation instructions.

B. Touch up factory applied prime coat if damaged. Use primer supplied by the factory.

C. Apply finish coatings to factory primed surfaces. Comply with the requirements of Section 09910 and the manufacturer's instructions.

3.02 FIELD QUALITY CONTROL

A. Provide an installation completion report prepared by the technician who inspected and adjusted the equipment. This report may be a letter or a form. It must be signed and dated by the manufacturer's technician. The report must indicate that installation has been satisfactorily completed in accordance with the manufacturer's instructions and is ready for operation. If that is not the case, the report must indicate what actions are needed to make the equipment ready for operation.

B. Retain the services of a representative of the manufacturer to instruct the plant staff in the proper operation and maintenance of the equipment. Pay for a minimum of 2 hours of instruction and associated materials for up to 5 City staff members. Conduct this training during or after startup.

END OF SECTION

SECTION 15060

PIPE HANGERS AND SUPPORTS

PART 1 GENERAL

1.01 SUMMARY

A. Section Includes:

1. System of pipe supports and anchors with necessary inserts, bolts, nuts, restraining and hanger rods, washers, miscellaneous steel, and other accessories.

1.02 MEASUREMENT AND PAYMENT

A. No separate payment will be made under this section. Include the cost for this work in bid items for which the work is required.

1.03 DEFINITIONS

A. Submerged: At or below point 1 ft 6 in. above peak (maximum) water surface elevations I water holding structure.

1.04 SYSTEM DESCRIPTION

A. Design Requirements:

1. Design, detail and installation of pipe support system shall be responsibility of CONTRACTOR.

2. Pipe support system components shall withstand dead loads imposed by weight of pipes filled with water plus insulation, plus live loads due to thermal expansion, vibration, internal test pressures, and have minimum safety factor of 5.

3. Absence of pipe supports and details on Drawings shall not relieve CONTRACTOR of responsibility for providing them throughout plant.

4. Supply design loading criteria to precast concrete manufacturer for piping supported from precast.

1.05 SUBMITTALS

A. Shop Drawings:

1. Pipe supporting system, including manufacturer's project data, dimensions, sizes, types, location, maximum loadings, thrust anchorage, and installation instructions.

2. Provide one reproducible and one print.

B. Submit in accordance with Section 01330 – Submittals

PART 2 PRODUCTS

2.01 MANUFACTURERS

A. B-Line.

B. Grinnell.

C. Carpenter-Patterson.

D. Unitstrut.

E. Superstrut.

F. Or equal.

2.02 GENERAL

A. MSS types indicated are typical of types and quality of standard pipe supports and hangers to be employed.

B. Provide factory fabricated piping hangers and supports, clamps, hanger rod attachments, building attachments, addles, shields, thrust anchorage, and other miscellaneous projects of MSS SP-69 type indicated or shop fabricated supports; comply with MSS SP-58 and manufacturer's published product information. Where MSS type not indicated, provide proper selection for installation requirements and comply with MSS SP-69, MSS SP-89 and manufacturer's published product information.

2.03 MATERIALS

A. Hangers, rods, clamps, protective shields, metal framing, support components, and hanger accessories shall be galvanized unless otherwise noted.

B. Hangers, rods, clamps, protective shields, metal framing, support components, and hanger accessories in submerged locations in wet wells, tanks, channels or tank covers shall be Type 316 stainless steel.

2.04 HORIZONTAL PIPING HANGERS AND SUPPORTS

A. General:
   1. Unless otherwise shown or specified, hangers for 2 ½ in. and smaller pipe shall be split-ring, adjustable swivel, clevis or roller type, hangers for 3 in. pipe or greater shall be clevis or roller type.
   2. Hangers for use with spring supports shall be split-ring or clamp type.
   3. Hangers for fiberglass reinforced pipe shall be saddle type.
   4. Each hanger shall be designed to permit at least 1 ½ in. vertical adjustment after installation.

B. Adjustable Swivel Split-Ring Hanger: MSS Type 6.

C. Adjustable Clevis Hanger: MSS Type 1, fabricated from steel.

D. Adjustable Band Hanger: MSS Type 7, fabricated from steel.

E. Adjustable Swivel Split-Band Hanger: MSS Type 10.

F. Clamp: MSS Type 4.

G. Single Roll Support: MSS Type 41, including axle roller and clevis.

H. Adjustable Roller Hanger: MSS Type 43, including axle roller and clevis.

I. Roll/Stand: MSS Type 44, including roller, stand, and axle.

J. Adjustable Roll/Base: MSS Type 46, including roller, adjustable base, and stand.

K. Steel Brackets Welded structural steel shapes complying with the following.
   1. Light Duty: MSS Type 31.
   2. Medium Duty: MSS Type 32.
   3. Heavy Duty: MSS Type 33.

L. Adjustable Saddle Support:
   1. MSS Type 38, including saddle and U-bolt.
   2. Fabricate base support from steel pipe and include cast iron flange or welded

M. Stanchion Saddle Support:
   1. MSS Type 37, including saddle and U-bolt.
   2. Fabricate base support from steel pipe and include cast iron flange or welded steel plate.

N. Strap or wire hangers not acceptable.

2.05 VERTICAL PIPING CLAMPS

A. 2-Bolt Riser Clamp: MSS Type 8, galvanized or plastic coated.

B. 4-Bolted Riser Clamp: MSS Type 42, include pipe spacers at inner bolt holes, galvanized or plastic coated.

2.06 HANGER RODS AND ATTACHMENTS

A. Hanger Rods:
1. ASTM A36 threaded both ends or continuous threaded.
2. Rods shall conform to following sizes.

Pipe Size	Minimum Rod Dia (in.)
Up to 2 In.	3/8
2 ½ in and 3 in.	1/2
4 in.	5/8
6 in.	3/4
8 in. to 12 in.	7/8
14 in. and Up	1
Trapeze Hangers	As Required

B. Turnbuckles: MSS Type 13.

C. Weldless Eye Nut: MSS Type 17.

D. Eye Socket: MSS Type 16.

E. Clevis: MSS Type 14.

2.07 BUILDING ATTACHMENTS

A. Individual Concrete Inserts:
1. MSS Type 18, malleable iron.
2. MSS Type 19, steel.
3. Minimum Safe Load: 1,100 lbs.

B. Continuous Concrete Inserts:
   1. Unistrut, P-3200 Series.
   2. B-Line.
   3. Superstrut.
   4. Or equal.

C. Top Beam C-Clamp: MSS Type19.

D. C-Clamps: MSS Type 25.

E. Single-Side Clamp: MSS Type 25.

F. Top I-Beam Clamp: MSS Type 25.

G. Side Beam Clamp: MSS Type 20.

H. Concrete Anchors:
   1. Comply with Section 05580 – Metal Fabrication.
   2. Minimum Safety Factor: 5.

2.08 SADDLES AND SHIELDS

A. Protection Saddles: MSS Type 39.

B. Protection Shields: MSS Type 40.

C. Wood Insulation Saddle:
   1. Elcen Metal Products Company.
   2. Or equal.

2.09 MISCELLANEOUS MATERIALS

A. Metal Framing Systems:
   1. Unistrut, galvanized.
   2. B-Line.
   3. Or equal.

B. Shop-Fabricated Anchors and Supports:
   1. Steel Plates, Shapes, and Bars: ASTM A36.
   2. Restraining Rods: ASTM A307.
   3. Fabricate in accordance with Section 05580 – Metal Fabrication.

C. Concrete: Class B in accordance with Section 03300.

PART 3 EXECUTION

3.01 GENERAL

A. Proceed with installation of hangers, supports, and anchors after required building structural work is complete and concrete support structure has reached 28-day compressive strength as specified in Section 03300.

B. Install hangers, supports, clamps, and attachments from building structure. Comply with MSS SP-69. Group parallel runs of horizontal piping to be supported together on trapeze type hangers where possible.

C. Install supports to provide indicated pipe slopes and maximum pipe deflections allowed by ANSI B31.1 are not exceeded.

D. Except as otherwise indicated for exposed continuous pipe runs, install hangers and supports of same type and style as installed for adjacent similar piping.

E. Do not support piping from other piping.

F. Prevent contact between dissimilar metals. Where concrete or metal pipe support is used, place 1/8 in. thick teflon, neoprene rubber or plastic strip under piping at point of bearing. Cut to fit entire area of contact between pipe and support.

G. Prevent electrolysis in support of copper tubing by use of hangers and supports which are copper plated, plastic coated or by other recognized industry methods. Electrician's tape not acceptable isolation method.

H. Apply anti-seize compound to nuts and bolts.

3.02 INSTALLATION OF BUILDING ATTACHMENTS

A. Support piping from structural framing, unless otherwise noted.

B. Concrete Inserts:
   1. Locate inserts so total load on insert does not exceed manufacturer's recommended maximum load. Location of inserts shall be approved by ENGINEER.
   2. Where necessary to anchor supports to hardened concrete or completed masonry, use concrete anchors.

C. Attach to structural steel with beam clamps.

3.03 THRUST ANCHORS AND GUIDES

A. Thrust Anchors:
   1. For suspended piping, center thrust anchors as closely as possible between expansion joints and between elbows and expansion joints. Anchors shall hold pipe securely and be sufficiently rigid to force expansion and contraction movement to take place at expansion joints or elbows and preclude separation of joints.
   2. Provide thrust anchors as required to resist thrust due to changes in dia or direction or dead ending of pipe lines. Anchorage shall be required wherever bending stresses exceed allowable for pipe. Wall pipes may be used as thrust anchors.
   3. Restraining rod size and number shall be as shown on Drawings.

B. Pipe guides shall be provided adjacent to sliding expansion joints in accordance with recommendations of National Association of Expansion Joint Manufacturers.

3.04 PIPE SUPPORT

A. Spacing:

Type of Pipe	Maximum Pipe Support Spacing (ft)
Steel	
10 in. and over	22
8 in.	19
6 in.	17
5 in.	16
4 in.	14
3 ½ in.	13
3 in.	12
2 ½ in.	11
2 in.	10
1 ½ in.	9
1 in.	7

¾ in.	6
½ in.	5
Copper	
4 in.	12
3 ½ in.	11
3 in.	10
2 ½ in.	9
2 in.	8
1 ½ in.	8
1 ¼ in.	7
1 in.	5
¾ in.	5
½ in.	5
Plastic (Schedule 80 to 100 °F)	
8 in.	9-1/2
6 in.	9
4 in.	7-1/2
3 in.	7
2 in.	6
1 ½ in.	5-1/2
1 in.	5
¾ in.	4-1/2
½ in.	4-1/2
(For plumbing application plastic piping shall be supported at maximum of 4 ft-0 in. spacing)	

Cast Iron and Ductile Iron	
1 in. and smaller	6
1 ¼ in. through 2 ½ in.	8
3 in. and 4 in.	10
6 in.	12
8 in.	12
10 in. and 12 in.	14
14 in.	16
16 in. and 18 in.	16
20 in.	18
24 in. and larger	18
(For cast iron soil pipe plumbing applications, support at 5 ft-0 in. spacing.)	

B. Where piping of various sizes is to be supported together, space supports for smallest pipe size or install intermediate supports for smaller dia pipe.

C. Provide minimum of 2 pipe supports for each pipe run.

D. Where piping connects to equipment, support by pipe support and not by equipment, unless approved by equipment manufacturer.

E. Unless otherwise shown or authorized by ENGINEER, place piping running parallel to walls approximately 1 ½ in. out from face of wall and at least 3 in. below ceiling.

F. Pedestal pipe supports shall be adjustable with stanchion, saddle, and anchoring flange.

G. Piping supports for vertical piping passing through floor sleeves shall be galvanized steel riser clamps.

H. Piping passing through sleeves or openings in interior wall sleeves shall be carried by supports or hangers. Do not rest on wall.

I. Support piping in manner preventing undue strain on valve, fitting or equipment. Provide pipe supports at changes in direction or elevation, adjacent to flexible couplings, adjacent to nonrigid joints, and where otherwise shown. Do not install pipe supports and hangers in equipment access areas.

J. Install supports to allow controlled movement of piping systems, permit freedom of movement between pipe anchors, and facilitate action of expansion joints, expansion loops, expansion bends, and similar units.

K. Piping shall be free to move when expands or contracts, except where fixed anchors are indicated. Where adequate hanger rod swing length cannot be provided or where pipe movement based on expansion of 1 in./100 ft for each 100°F change in temperature exceed ½ in., provide approved roller supports.

L. Support piping 6 in. and larger on trapeze hangers with rollers.

M. Support plumbing in accordance with the Standard Plumbing Code.

N. Stacked horizontal runs of piping along walls may be supported by metal framing system attached to concrete insert channels.

3.05 INSULATED PIPING

A. Attach clamps, including spacers (if any), to piping with clamps projecting through insulation; do not exceed allowable pipe stresses.

B. Where low compressive strength insulation or vapor barriers are indicated on cold or chilled water piping, install coated protective shields. For pipe 8 in. and over, install wood insulation saddles.

C. Where insulation without vapor barrier is indicated, install protection saddles on piping 2 in. and larger.

3.06 BURIED PIPING

A. Provide unlugged bell and spigot or bell tees, Y-branches, and bends deflecting 11 ¼ degrees or more and plugs with reaction blocking, anchors, joint harness or other acceptable means for preventing movement of pipe and joints caused by internal pressure.

B. Concrete Blocking:
   1. Extend from fitting to solid undisturbed earth and installed so joints accessible for repair.
   2. Bearing area of concrete reaction blocking shall be as shown on Drawings.
   3. If adequate support against undisturbed ground cannot be obtained, install metal harness anchorages consisting of steel rods across joint and securely

anchored to pipe and fitting or other adequate anchorage facilities to provide necessary support.

4. Should lack of solid vertical excavation face be due to improper trench excavation, cost of furnishing and installing metal harness anchorages in excess of Contract value on concrete blocking replaced by such anchorages shall be borne by CONTRACTOR.

C. Provide reaction blocking, anchorages or other supports for fittings installed in fills or other unstable ground or above grade as shown on Drawings.

END OF SECTION

THIS PAGE INTENTIONALLY LEFT BLANK

SECTION 15070

HANGERS AND SUPPORTS FOR PLUMBING

PART 1 - GENERAL

1.1 WORK INCLUDED

A. Pipe hangers, supports, and associated anchors.

B. Sleeves and seals.

C. Flashing and sealing equipment and pipe stacks.

1.2 MEASUREMENT AND PAYMENT

A. No separate payment will be made under this section. Include the cost for this work in bid items for which the work is required.

1.3 RELATED WORK

A. Section 15260 - Piping Insulation.

B. Section 15410 - Plumbing Fixtures.

1.4 REFERENCES

A. NFPA 13.

B. NFPA 14.

1.5 SUBMITTALS

A. Submit shop drawings and product data.

B. Indicate hanger and support framing and attachment methods.

PART 2 - PRODUCTS

2.1 PIPE HANGERS AND SUPPORTS

A. Hangers for Pipe Sizes 1/2 to 1-1/2 Inch Malleable iron, adjustable swivel, split ring.

B. Hangers for Pipe Sizes 2 to 4 Inches Carbon steel, adjustable, clevis.

C. Vertical Support: Steel riser clamp.

D Floor Support for Pipe Sizes to 4 Inches: Cast iron adjustable pipe saddle, locknut nipple, floor flange, and concrete pier or steel support.

E. Copper Pipe Support: Carbon steel ring, adjustable, copper plated.

F. Shield for Insulated Piping 2 Inches and Smaller: 18 gage galvanized steel shield over insulation in 180 degree segments, minimum 12 inches long at pipe support.

G Shield for Insulated Piping 2-1/2 Inches and Larger: Pipe covering protective saddles, 18 inches long, 16 gage minimum.

H. Shields for Vertical Copper Pipe Risers: Sheet lead.

2.2 HANGER RODS

A. Steel Hanger Rods: Threaded both ends, threaded one end, or continuous thread.

2.3 FLASHING

A. Metal Flashing: 20 gage galvanized steel.

B. Lead Flashing: 5 lb/sq ft sheet lead for waterproofing; one lb/sq ft sheet lead for soundproofing.

C. Caps: Steel, 20 gage minimum; 16 gage at fire resistant elements.

2.4 SLEEVES

A. Sleeves for Pipes Through Non-fire Rated Floors: Form with 18 gage galvanized steel.

B. Sleeves for Pipes Through Non-fire Walls, Footings, and Potentially Wet Floors: Form with steel pipe.

F. Fire Stopping Insulation: Glass fiber type, non-combustible.

G. Caulk: Paintable 25-year acrylic sealant.

2.5 FABRICATION

A. Size sleeves large enough to allow for movement due to expansion and

contraction. Provide for continuous insulation wrapping.

B. Design hangers without disengagement of supported pipe.

C. Provide copper plated hangers and supports for copper piping.

PART 3 - EXECUTION

3.1 INSERTS

A. Provide inserts for suspending hangers from reinforced concrete slabs.

B. Where inserts are omitted, drill through concrete slab from below and provide thru-bolt with recessed square steel plate and nut recessed into and grouted flush with slab. Verify with structural engineer prior to start of work.

3.2 PIPE HANGERS AND SUPPORTS

A. Support horizontal piping as follows:

PIPE SIZE	MAX. HANGER SPACING	HANGER DIAMETER
1/2 to 1-1/4 inch	6'-6"	3/8"
1-1/2 to 2 inch	10'-0"	3/8"
2-1/2 to 3 inch	10'-0"	1/2"
4 inch	10'-0"	5/8"
PVC (All Sizes)	6'-0"	3/8"

B. Install hangers to provide minimum 1/2 inch space between finished covering and adjacent work.

C. Place a hanger within 12 inches of each horizontal elbow.

D. Use hangers with 1-1/2 inch minimum vertical adjustment.

H. Support riser piping independently of connected horizontal piping.

3.3 INSULATED PIPING: Comply with the following installation requirements.

A. Clamps: Attach galvanized clamps, including spacers (if any), to piping with clamps projecting through insulation; do not exceed pipe stresses allowed by ASME B31.9.

B. Saddles: Install galvanized protection saddles MSS Type 39 where insulation without vapor barrier is indicated. Fill interior voids with segments of insulation that match adjoining pipe insulation.

C. Shields: Install protective shields MSS Type 40 on cold water piping that has vapor barrier. Shields shall span an arc of 180 degrees and shall have dimensions in inches not less than the following:

NPS	LENGTH	THICKNESS
1/4 THROUGH 3-1/2	12	0.048
4	12	0.060

3.4 FLASHING

A. Provide flexible flashing and metal counter-flashing where piping penetrates weather or waterproofed walls, floors, and roofs.

B. Flash vent and soil pipes projecting 8 inches minimum above finished roof surface with lead worked one inch minimum into hub, 8 inches minimum clear on sides with 24 x 24 inches sheet size. For pipes through outside walls, turn flanges back into wall and caulk, metal counter-flash and seal.

C. Flash floor drains in floors with topping over finished areas with lead, 10 inches clear on sides with minimum 36 x 36 inch sheet size. Fasten flashing to drain clamp device.

3.5 SLEEVES

A. Set sleeves in position in formwork. Provide reinforcing around sleeves.

B. Extend sleeves through floors minimum one inch above finished floor level. Caulk sleeves full depth with fire rated Therm-fiber and 3m caulking and provide floor plate.

C. Where piping penetrates floor, or wall, close off space between pipe and adjacent work with fire stopping insulation and caulk seal air tight. Provide close fitting metal collar or escutcheon covers at both sides of penetration.

END OF SECTION

SECTION 15140

DOMESTIC WATER PIPING

PART 1 GENERAL

1.1 SUMMARY

Section includes domestic water piping, valves, fittings, hangers, and accessories.

1.2 MEASUREMENT AND PAYMENT

A. No separate payment will be made under this section. Include the cost for this work in bid items for which the work is required.

1.3 SUBMITTALS

A. Product Data: Submit data on pipe materials; pipe fittings, valves, and accessories. Submit manufacturers catalog information. Indicate valve data and ratings.

B. Manufacturer's Installation Instructions: Submit installation instructions for valves and accessories.

C. Manufacturer's Certificate: Certify products meet or exceed specified requirements.

1.4 CLOSEOUT SUBMITTALS

A. Project Record Documents: Record actual locations of valves and equipment.

B. Operation and Maintenance Data: Submit spare parts list, exploded assembly views and recommended maintenance intervals.

1.5 QUALIFICATIONS

A. Manufacturer: Company specializing in manufacturing products specified in this Section with minimum three (3) years documented experience.

1.6 DELIVERY, STORAGE, AND HANDLING

A. Provide temporary protective coating on steel valves.

B. Provide temporary end caps and closures on piping and fittings. Maintain in place until installation.

C. Protect piping systems from entry of foreign materials by temporary covers, completing sections of the work, and isolating parts of completed system.

1.7 ENVIRONMENTAL REQUIREMENTS

Do not install underground piping when bedding is wet or frozen.

1.8 FIELD MEASUREMENTS

Verify field measurements prior to fabrication.

1.9 EXTRA MATERIALS

Furnish two packing kits for each size valve and two loose keys for outside hose bibbs.

PART 2 PRODUCTS

2.1 WATER PIPING, BURIED OUTSIDE OF BUILDING

A. Copper Tubing: ASTM B42, hard drawn. 4" pipe size and smaller.
1. Fittings: ASME B16.18 cast copper alloy or ASME B16.22 wrought copper and bronze.
2. Joints: ASTM B32, solder, Grade 95TA.
3. Solder shall be lead free and antimony free and shall conform to the Safe Water Drinking Act Amendments, enforceable since June 1988. Solder shall be Silverbrite 100 as manufactured by Englehard Corporation or approved equal.

2.2 WATER PIPING UNDER FLOOR SLAB AND TRAP-PRIMER PIPING

A. Copper Tubing: ASTM B42, Type K soft. 1 1/2" pipe size and smaller.
1. Fittings: ASME B16.26 cast bronze.
2. Joints: No joints allowed below slab.
3. Trap-primers: All piping below slab or installed in concrete or masonry floors and walls shall be encased in a polyethylene sleeve, "Polysleeve" or equal.
4. Pressure Water Piping: All piping below slab on grade shall be encased in a Schedule 40 PVC sleeve.

2.3 WATER PIPING, ABOVE GRADE

A. Copper Tubing: ASTM B88, Type L, K, hard drawn.
1. Fittings: ASME B16.18, cast copper alloy or ASME B16.22, wrought copper and bronze.
2. Joints: ASTM B32, solder, Grade 95TA.

3. Solder shall be lead free and antimony free and shall conform to the Safe Water Drinking Act Amendments. Solder shall be Silverbrite 100 as manufactured by Englehard Corporation or approved equal.

2.4 FLANGES, UNIONS, AND COUPLINGS

A. Pipe Size 2 inches and Under:
1. Ferrous Pipe: Class 150 malleable iron threaded unions.
2. Copper Tube and Pipe: Class 150 bronze unions with soldered joints.

B. Dielectric Connections: Union with galvanized or plated steel threaded end, copper solder end, and water impervious isolation barrier.

2.5 PIPE HANGERS AND SUPPORTS

A. Plumbing Piping: Conform to ASME B31.9 ASTM F708.

B. Refer to Section 15060 – Hangers and Supports.

2.6 GATE VALVES

A. Manufacturers:
1. Stockham Model B104, G612.
2. Jenkins.
3. Nibco.
4. Crane.

B. Up To and Including 2 inches: Class 125, bronze body, bronze trim, rising stem, hand wheel, inside screw, solid wedge disc, solder or threaded ends.

2.7 GLOBE VALVES

A. Manufacturers:
1. Stockham.
2. Jenkins.
3. Nibco.
4. Crane.

B. Up To and Including 2 inches: Class 125, bronze body, bronze trim, hand wheel, bronze disc, solder or threaded ends.

2.8 BALL VALVES

A. Manufacturers:
1. Stockham Model S127.
2. Jenkins.

3. Nibco.
4. Crane.

B. Construction, 2 inches and Smaller: Class 150, bronze, one piece body, chrome plated brass ball, regular port, teflon seats and stuffing box ring, blow-out proof stem, lever handle with balancing stops, solder or threaded ends with union.

2.9 BUTTERFLY VALVES

A. Manufacturers:
1. DeZurik Model 632.
2. Stockham.
3. Jenkins.
4. Nibco.

B. Construction 1-1/2 inches and Larger:
1. Cast or ductile iron body, nickel-plated ductile iron disc, resilient replaceable EPDM Buna N seat, wafer lug ends, extended neck, infinite position lever handle with memory stop.

2.10 SWING CHECK VALVES

A. Manufacturers:
1. Mission Model Duo-Chek.
2. Stockham.
3. Crane.
4. Jenkins.

B. Up To and Including 2 inches: Class 125, bronze body and cap, bronze swing disc with rubber seat, solder or threaded ends.

C. 2 inches and Larger: Class 125, iron body, bronze swing disc, renewable disc seal and seat, flanged ends.

2.11 FIRE STOP SYSTEMS

A. Manufacturers:
1. 3M Model 2000.
2. Spec Seal Model 100.
3. Hilti.

B. General Purpose Fire Stopping Sealant: Water based, non-slumping, premixed sealant with intumescent properties, rated for three (3) hours in accordance with ASTM E814 and UL 1479.

2.12 WALL HYDRANTS

A. Refer to schedule sheet WH#3-P-2 for hydrant requirements,

2.13 SLEEVES

A. For pipes 4" and under and passing through partitions, walls, and floors – galvanized steel pipe.

B. Where approved by Engineer prior to installation, at floor penetration in slab on grade construction, flexible foam pipe wrap such as "Flex-Wrap" by Cal-Western may be substituted for sleeve.

C. Cover trap-primer piping embedded in concrete floors and walls with "Poly-sleeve" or equal polyethylene sleeve material.

2.14 TRAP-PRIMERS

Refer to Plumbing Fixture Schedule and Details on Drawings for specification of trap-primers.

2.15 LAVATORY PROTECTIVE PIPE SHIELD

A. Manufacturers:
1. Trubro Lav-Shield.

B. ADA conforming, wheel chair accessible lavatory p-trap and supply stop protective covering constructed of molded, impact resistant, stain resistant, antimicrobial vinyl with reusable fasteners and access cover for supply stops.

2.16 SUPPLY STOPS

Chrome-plated, brass body angle stop with removable seat, loose T-handle key, chrome-plated supply tube and chrome-plated escutcheon. T&S Brass B-0418 or as indicated on drawings.

PART 3 EXECUTION

3.1 EXAMINATION

Verify excavations are to required grade, dry, and do not over-excavate.

3.2 PREPARATION

A. Ream pipe and tube ends. Remove burrs.

B. Remove scale and dirt, on inside and outside, before assembly.

C. Prepare piping connections to equipment with unions.

D. Excavate and backfill in accordance with Architectural Specifications.

3.3 INSTALLATION

A. Install Work in accordance with manufacturer's instructions.

B. Install shut-off valves at a height and location that is readily and safely accessible to maintenance personnel from an eight-foot stepladder.

C. Install non-conducting dielectric connections wherever jointing dissimilar metals.

D. Route piping in orderly manner and maintain gradient. Route parallel and perpendicular to walls.

E. Install piping to allow for expansion and contraction without stressing pipe, joints, or connected equipment.

F. Provide clearance in hangers and from structure and other equipment for installation of insulation and access to valves and fittings. Refer to Section 15060 – Hangers and Supports.

G. Provide access where valves and fittings are not exposed. Coordinate size and location of access doors with Architectural division prior to installation.

H. Isolate copper piping from contact with metal structures.

I. Establish elevations of buried piping outside the building to obtain not less than three feet of cover.

J. Building Entrances: shall be kept as close to grade as possible. Provide keyed gate valve at entrance. Provide hose bibb where shown on plans, at entrance for system drain down.

K. Prepare exposed, unfinished pipe, fittings, supports, and accessories ready for finish painting as may be required.

L. Install valves with stems upright or horizontal, not inverted.

M. Install water piping in accordance with ASME B31.9.

N. Sleeve pipes passing through partitions, walls and floors. At penetrations of exterior walls, fill annular space in sleeve with non-combustible material. Caulk and seal weather-tight and vermin-tight.

O. Provide fire-stopping sealant at all piping penetrations of fire rated barriers.

P. Install potable water protection devices on plumbing lines where contamination of domestic water may occur; on interior and exterior hose bibbs.

Q. Install air chambers on hot and cold water supply piping to each fixture. Fabricate same size as supply pipe or 3/4 inch minimum and minimum 18 inches long. .

R. Cover water and waste piping underneath ADA compliant fixtures with protective pipe covering kits.

S. Insulate domestic water piping at point of entry into building. Cover with aluminum jacketing.

3.4 SERVICE CONNECTIONS

Refer to civil drawings for location of new water service complete with approved back-flow preventer and water meter with by-pass valves in accordance with local utility requirements.

3.5 ERECTION TOLERANCES

Slope water piping minimum 0.25 percent and arrange to drain at low points.

3.6 DISINFECTING OF DOMESTIC WATER

A. Prior to starting work, verify system is complete, flushed, and clean.

B. Verify pH of water to be treated is between 7.4 and 7.6 by adding alkali (caustic soda or soda ash) or acid (hydrochloric).

C. Inject disinfectant, free chlorine in liquid, powder and tablet or gas form, throughout system to obtain residual from 50 to 80 mg/L.

D. Bleed water from outlets to obtain distribution and test for disinfectant residual at minimum 15 percent of outlets.

E. Maintain disinfectant in system for 24 hours.

F. When final disinfectant residual tests less than 25 mg/L, repeat treatment.

G. Flush disinfectant from system until residual concentration is equal to incoming water or 1.0 mg/L.

H. Take samples no sooner than 24 hours after flushing, from 10 percent of outlets and from water entry, and analyze in accordance with AWWA C651.

3.7 SCHEDULES

METAL PIPE HANGER SPACING

A. Pipe size: 1/2 to 1-1/4 inches:
   1. Maximum hanger spacing: 6.5 ft..
   2. Hanger rod diameter: 5/8 inch.

B. Pipe size: 1-1/2 to 2 inches:
   1. Maximum hanger spacing: 10 ft.
   2. Hanger rod diameter: 3/8 inch.

C. Pipe size: 2-1/2 to 3 inches:
   1. Maximum hanger spacing: 10 ft.
   2. Hanger rod diameter: 1/2 inch.

D. Pipe size: 4 to 6 inches:
   1. Maximum hanger spacing: 10 ft.
   2. Hanger rod diameter: 5/8 inch.

PLASTIC PIPING HANGER SPACING

A. Maximum hanger spacing: 6-ft: Hanger rod diameter: 3/8 inch.

END OF SECTION

SECTION 15150

SANITARY WASTE AND VENT PIPING

PART 1 GENERAL

1.1 SUMMARY

Section includes pipe, pipefittings, connections, and equipment for sanitary sewer piping systems. This Section also includes floor drains and cleanouts.

1.2 MEASUREMENT AND PAYMENT

A. No separate payment will be made under this section. Include the cost for this work in bid items for which the work is required.

1.3 SUBMITTALS

A. Product Data: Submit data on pipe materials, fittings, and accessories. Submit manufacturers catalog information. Indicate component sizes, rough-in requirements, service sizes, and finishes.

1.4 DELIVERY, STORAGE, AND HANDLING

A. Transport, handle, store and protect products.

B. Accept piping and accessories on site as delivered. Inspect for damage.

1.5 ENVIRONMENTAL REQUIREMENTS

Do not install underground piping when bedding is wet or frozen.

1.6 FIELD MEASUREMENTS

Verify field measurements prior to fabrication.

1.7 WARRANTY

Manufacturer's standard materials warranty.

PART 2 PRODUCTS

2.1 SANITARY SEWER PIPING, BURIED WITHIN 5 FEET OF BUILDING

A. Cast Iron Pipe: ASTM A74 service weight.
1. Fittings: Cast iron.
2. Joints: Hub-and-spigot, CISPI HSN compression type with ASTM C564 neoprene gaskets or lead and oakum.
3. Piping below slab on grade shall be hub and spigot up through the first joint above slab.

B. PVC Pipe: ASTM D2665 or ASTM D3034.
1. Fittings: PVC – DWV.
2. Joints: ASTM D2855, solvent weld with ASTM D2564 solvent cement.

2.2 SANITARY SEWER PIPING, ABOVE GRADE

A. Copper Tube: ASTM B306, DWV, Type K, L.
1. Fittings: ASME B123, cast bronze, or ASME B129, wrought copper.
2. Joints: ASTM B32, solder, Grade 50B.

B. PVC Pipe: ASTM D2665, Schedule 40.
1. Fittings: PVC – DWV.
2. Joints: ASTM D2855, solvent weld with ASTM D2564 solvent cement.

C. PVC Pipe: ASTM D1785 Schedule 40, or ASTM D2241 SDR-26 for not less than 150 psi (1 034 kPa) pressure rating.
1. Fittings: ASTM D2466, PVC.
2. Joints: ASTM D2855, solvent weld with ASTM D2564 Solvent cement.

2.3 PIPE HANGERS AND SUPPORTS

A. Drain, Waste, and Vent: Conform to ASME B31.9 ASTM F708.

B. Refer to Section 15060 – Hangers and Supports

2.4 FIRE STOP SYSTEMS

A. Manufacturers:
1. 3M Model 2000.
2. Spec Seal Model 100.
3. Hilti.

B. General Purpose Fire Stopping Sealant: Water based, non-slumping, premixed sealant with intumescent properties, rated for 3 hours in accordance with ASTM E814 and UL 1479.

C. General Purpose Vibration Resistant Fire Stopping Sealant: Silicone based, non-slumping, premixed sealant with intumescent properties, vibration and moisture resistant, rated for 3 hours in accordance with ASTM E814 and UL 1479.

D. DWV Plastic Pipe Systems Fire Stopping Sealant: Silicone based, premixed sealant with intumescent properties, vibration and moisture resistant, rated for 3 hours in accordance with ASTM E814 and UL 1479 with metal collars.

2.5 FLOOR DRAINS

A. Manufacturers:
1. Zurn Model ZN-415.
2. Wade.
3. Josam.
4. J.R. Smith.

B. Floor Drain: ANSI A1121.1; lacquered cast iron two piece body with double drainage flange, weep holes, reversible clamping collar and adjustable nickel-bronze strainer.

C. Accessories: Provide strainers as indicated on Drawings. On second floor and above, provide lead flashing and flashing flange, or other flashing material as required by Contract Documents.

2.6 CLEANOUTS

A. Manufacturers:
1. Zurn .
2. Wade.
3. Josam.
4. J.R. Smith.

B. Exterior Surfaced and Unsurfaced Areas: Round cast nickel bronze access frame and non-skid cover, Zurn Z-1406.

C. Interior Finished Floor Areas: Lacquered cast iron body with polished nickel bronze scoriated top, anchor flange, reversible clamping collar, threaded top assembly, and round scored cover with gasket in service areas and round depressed cover with gasket to accept floor finish in finished floor areas, Zurn ZN-1454.

PART 3 EXECUTION

3.1 PREPARATION

A. Ream pipe and tube ends. Remove burrs. Bevel plain end ferrous pipe.

B. Remove scale and dirt, on inside and outside, before assembly.

C. Prepare piping connections to equipment with flanges or unions.

D. Excavate and backfill in accordance with Architectural Specifications.

3.2 INSTALLATION

A. Extend cleanouts to finished floor. Lubricate threaded cleanout plugs with mixture of graphite and linseed oil. Provide clearances at cleanout for snaking drainage system.

B. Encase exterior cleanouts in concrete flush with grade.

C. Install floor cleanouts at elevation to accommodate finished floor.

D. Provide non-conducting dielectric connections wherever jointing dissimilar metals.

E. Route piping in orderly manner and maintain gradient. Route parallel and perpendicular to walls.

F. Install piping to allow for expansion and contraction without stressing pipe, joints, or connected equipment.

G. Provide clearance in hangers and from structure and other equipment for installation of insulation and access to valves and fittings. Refer to Section 15080 – Mechanical Insulation.

H. Provide access where valves and fittings are not exposed. Provide access panels in accessible walls and ceilings.

I. Establish elevations of buried piping outside building to provide not less than three (3) feet of cover.

J. Maintain code-mandated clearances between sanitary sewer, domestic water, and electrical conduit.

K. Install piping penetrating roofed areas to maintain integrity of roof assembly.

L. At vents-through-roof, provide flashing and install in accordance with Section 15060 – Hangers and Supports.

M. Sanitary tees shall be installed in a vertical position only. Where installation is in the horizontal position, provide a sanitary wye and ¼ bend or combination fitting. Tapped tees may be installed in the vertical position at drinking fountains, lavatories, or cleanouts only. Tapped crosses are prohibited.

N. Sleeve pipes passing through partitions, walls, and floors. Where approved by Engineer prior to construction, at floor penetration in slab on grade, flexible foam wrap such as "Flex-Wrap" by Cal-Western may be substituted for sleeve.

O. Piping below slab on grade shall be hub and spigot up through the first joint above slab.

3.3 ERECTION TOLERANCES

Establish invert elevations, slopes for drainage to 1/4 inch per foot minimum. Maintain gradients. Where existing conditions require, 1/8 inch per foot slope may be used on 4 inch and larger pipe where approved by local code authority prior to installation.

3.4 SCHEDULES

METAL-PIPE HANGER SPACING:

A. Pipe size: 1/2 to 1-1/4 inches
   1. Maximum hanger spacing: 5 ft.
   2. Hanger rod diameter: 3/8 inches.

B. Pipe size: 1-1/2 to 2 inches
   1. Maximum hanger spacing: 10 ft.
   2. Hanger rod diameter: 3/8 inch.

C. Pipe size: 2-1/2 to 3 inches
   1. Maximum hanger spacing: 10 ft
   2. Hanger rod diameter: 1/2 inch).

D. Pipe size: 4 to 6 inches:
   1. Maximum hanger spacing: 10 ft
   2. Hanger rod diameter: 5/8 inch

PLASTIC-PIPE HANGER SPACING:

A. All Sizes:
   1. Maximum hanger spacing: 6 ft
   2. Hanger rod diameter: 3/8 inch.

END OF SECTION

SECTION 15190

MECHANICAL IDENTIFICATION

PART 1 GENERAL

1.01 SECTION INCLUDES

A. Identification of mechanical products installed under Division 15.

1.02 REFERENCES

A. ANSI/ASME A13.1 - Scheme for the Identification of Piping Systems.

1.03 SUBMITTALS

A. Submit product data and manufacturer's installation instructions under provisions of Section 01330 - Submittal Procedures.

B. Submit list of working, symbols, letter size, and color coding for mechanical identification.

C. Submit valve chart and schedule, including valve tag number, location, function, and valve manufacturer's name and model number.

PART 2 PRODUCTS

2.01 ACCEPTABLE MANUFACTURERS

A. Seton.

B. W.H. Brady Company.

C. Approved equal.

2.02 MATERIALS

A. Color: Unless specified otherwise, conform with ANSI/ASME A13.1.

B. Plastic Nameplates: Laminated three-layer plastic with engraved black letters on light contrasting background color.

C. Plastic Pipe Markers: Factory fabricated, flexible, semi-rigid plastic, preformed to fit around pipe or pipe covering; minimum information indicating flow direction arrow and fluid being conveyed.

PART 3 EXECUTION

3.01 PREPARATION

A. Degrease and clean surfaces to receive adhesive for identification materials.

B. Prepare surfaces in accordance with Section 09901 - Protective Coatings, for stencil painting.

3.02 INSTALLATION

A. Plastic Nameplates: Install corrosive-resistant mechanical fasteners, or adhesive.

B. Plastic Tags: Install with corrosive-resistant chain.

C. Equipment: Identify heat transfer equipment with plastic nameplates.

D. Valves: Identify valves in main and branch piping with tags.

E. Piping: Identify piping, concealed or exposed, with plastic pipe markers. Tags may be used on small diameter piping. Identify service, flow direction, and pressure. Install in clear view and align with axis of piping. Locate identification not to exceed 20 feet on straight runs including risers and drops, adjacent to each valve and tee, at each side of penetration of structure or enclosure, and at each obstruction.

END OF SECTION

SECTION 15201

VALVES FOR WATER PLANT SERVICE

PART 1 GENERAL

1.01 SECTION INCLUDES

A. This section includes valves for exposed service in drinking water plants, pumping and storage facilities.

The following items are included:

1. Butterfly valves with actuators
2. Iron gate valves with actuators
3. Check valves
4. Air release valves
5. Sample taps
6. Bronze gate valves
7. Hose bibs

B. For buried valves see Section 02510-Valves for Water Mains.

C. Some products specified in this Section may not be required for this Contract.

1.02 MEASUREMENT AND PAYMENT

A. Payment for butterfly valves, gate valves, check valves and air release valves is on a unit price basis for each.

B. No separate payment will be made under this section sample taps and hose bibs. Include the cost for this work in bid items for which the work is required.

1.03 REFERENCES

A. American Water Works Association (AWWA):

1. AWWA C504 - Rubber-Seated Butterfly Valves.

2. AWWA C509- Resilient Seated Gate Valves for Water and Sewage Systems.

3. AWWA C 550 - Protective Interior Coatings for Valves and Hydrants.

1.04 QUALITY ASSURANCE

A. All valves furnished under this section shall comply with the public water supply standards of the following organizations:

1. Texas Commission on Environmental Quality

2. Factory Mutual

3. Underwriters Laboratory

4. National Sanitation Foundation

1.05 SUBMITTALS

A. General:

1. Comply with the requirements of Section 01330 when preparing and making submittals described in this section.

2. Submit the product data and shop drawings specified below in a single package. Partial submittals will not be reviewed.

3. Submit manufacturer's product data for proposed valves for approval.

4. Submit manufacturer's affidavit for proposed valves certifying compliance with specifications.

5. Submit manufacturer's affidavit of compliance with this specification and the referenced industry standards.

B. Submit the following product data:

1. Catalog cuts describing equipment specified in this section. Mark through inapplicable information.

2. Data sheets addressing all performance requirements specified in this section.

3. Data sheets addressing all product features such as materials of construction, design features, factory coatings, and accessories specified in this section.

4. Date sheets showing dimensions and weights.

5. Manufacturers installation instructions.

1.06 DELIVERY, STORAGE AND HANDLING

A. Handling

1. Handle valves in accordance with manufacturer's instructions

2. Use appropriate slings and lifting equipment.

3. Do not drop.

B. Storage

1. Protect valves so that soil and debris do not get inside them.

1.07 OPERATION AND MAINTENANCE MANUALS

A. Provide Operation and Maintenance manuals in accordance with Section 01782.

PART 2 PRODUCTS

2.01 BUTTERFLY VALVES

A. Approved Manufacturers:

1. Pratt

2. De ZURIK

3. Val-Matic

B. Standard: AWWA C 504

C. Description

1. Rubber seated.

2. Flanged ends.

3. Pressure class 150B.

4. Turn counterclockwise to close.

D. Construction

1. Body: Cast iron, ASTM A 126.

2. Discs: Either cast iron or ductile iron.

3. Seats: Buna-N or neoprene

1. Shafts: Stainless steel

5. Shaft Seals: Chevron V packing

E. Valve Actuator

1. Comply with AWWA C 504 – Hand Wheel.

F. Source Quality Control

1. Perform valve leakage tests in both directions at 150 psi in the factory.

2.02 IRON GATE VALVES

A. Manufacturers:

1. Mueller.

2. Clow.

3. J&S Valve.

B. Standard: AWWA C509

C. Description:

1. Type: Non-rising stem, resilient seat.

2. Pressure Ratings:

   a. 2 in. through 12. in.: 200 psi.

   b. 14 in. through 48 in.: 150 psi.

3. End Connections: Flanged
4. Actuator: Hand wheel

5. Shaft Seals: Stuffing box and packing

D. Other Requirements

1. Provide bypasses on 14-in. and larger valves. Mount directly to valve body with cast iron flanged connection.

2.03 CHECK VALVES

A. Approved Manufacturers

1. G. A. Industries, Inc. (Golden Anderson).

2. DeZurik (APCO).

3. Henry Pratt Company.

4. Val-Matic

B. Description

1. Type: Globe style silent operation check valve.

   a. Model:

      i. Golden Anderson, Figure 250D.

      ii. APCO Series 600.

      iii. Pratt Series 821A.

      iv. Val-Matic Series 1800

b. Valve Body:

i. Ductile iron body, ASTM A536, Grade 65-45-12.

ii. Stainless steel seat.

c. Disc Assembly:

i. Valve disc shall be center guided at bot he ends with a through integral shaft.

ii. Type 304 stainless steel seat and disc.

iii. Buna-N seating surface.

iv. Type 304 stainless steel helical or conical spring.

C. Description

1. Type: Slanting disc check valve with top mounted oil dash pot.

a. Model:

i. APCO Series 800T.

ii. GA Industries Tilting Disc Check Valve

b. Ductile iron body, ASTM A536, Grade 65-45-12.

c. Ductile iron dis, ASTM A536.

d. Bronze seat ring and disc ring, ASTM B16 C36000.

e. Type 303 stainless steel pivot pins.

f. Type 304 stainless steel pivot pin bushings.

2.04 AIR RELEASE VALVES

A. Approved Manufacturers:

1. DeZurik (APCO).
2. G-A Industries, Inc. (Golden Anderson).
3. Val-Matic

B. Description:

1. Air/Vacuum Valve Apco Series 140.
2. See drawings for size unless otherwise specified herein.

C. Valve Construction:

1. Cast iron body, cover and baffle.
2. Stainless steel float assembly.
3. Stainless steel orifice.

2.05 BRONZE GATE VALVES

A. Approved Manufacturers

1. Matco-Norca 512 Bronze Gate Valves.
2. Or approved equal

B. Description

1. Rising stem bronze gate valve.
2. 300 WOG – Class 150
3. ANSI/ASME B1.20.1, ISO 9001 Certified

2.06 SAMPLE TAP

A Approved Manufacturers

1. Matco-Norca FY-691.
2. Or equal.

B. Description

1. ½" MIP x plain spout.

2. No exterior threads.

3. Polished brass finish, 125 PSI.

2.07 HOSE BIBS

A Approved Manufacturers

1. Matco-Norca 646R Brass Hose Bib.

2. Or equal.

B. Description

1. Forged brass hose bib.

2. Inlet is ¾ NPT (M).

3. Outlet has ¾" garden hose threads.

4. Include vacuum breaker for all hose bibs.

PART 3 EXECUTION

3.01 INSTALLATION

A. Prior to installing valves, remove foreign matter from within valves. Inspect valves in open and closed position to verify that parts are in satisfactory working condition.

B. Install valves where shown on the Drawings.

C. Install in accordance with manufacturer's written instructions and approved submittals.

D. Install equipment in accordance with approved shop drawings and the manufacturer's installation instructions.

E. Touch up factory applied finishes using materials coatings by the equipment manufacturer.

F. Apply finish coatings to factory primed surfaces. Comply with the requirements of Section 09910 and the manufacturer's instructions.

G. Lubricate equipment and fill oil reservoirs of gear units, if any, in accordance with the manufacturer's instructions prior to initial operation.

H. For electrically operated valves, make electrical connections in accordance with the approved shop drawings.

END OF SECTION

SECTION 15260

PIPING INSULATION

PART I - GENERAL

1.1 GENERAL REQUIREMENTS

A. The requirements of the Mechanical General Conditions apply to all work herein.

1.2 MEASUREMENT AND PAYMENT

A. No separate payment will be made under this section. Include the cost for this work in bid items for which the work is required.

1.3 SCOPE

A. Scope of the Work shall include the furnishing and complete installation of the equipment covered by this Section, with all auxiliaries, ready for owner's use.

B. Work specified elsewhere.
   1. Pipe hangers and supports.

C. All piping subject to freezing conditions shall be insulated.

1.4 WARRANTY

A. Warrant the Work specified herein for one year.

B. Defects shall include, but not be limited to, the following:
   1. Mildewing.
   2. Peeling, cracking, and blistering.
   3. Condensation on exterior surfaces.

1.5 SUBMITTALS

A. SHOP DRAWINGS: Indicate size, material, and finish. Include details of joints, attachments, and clearances.

B. PRODUCT DATA: Submit schedules, charts, literature, and illustrations to indicate the performance, fabrication procedures, project variations, and accessories.

1.6 DELIVERY AND STORAGE

A. DELIVERY: Deliver undamaged materials in the manufacturer's unopened containers. Containers shall be clearly labeled with the insulation's flame and smoke ratings.

PART 2 - PRODUCTS

2.1 It is the intent of these specifications to secure superior quality workmanship resulting in an absolutely satisfactory installation of insulation from the standpoint of both function and appearance. Particular attention shall be given to valves, fittings, etc., requiring low temperature insulation to insure full thickness of insulation and proper application of the vapor seal. All flaps of vapor barrier jackets and/or canvas covering must be neatly and securely smoothed and sealed down.

2.2 The type of insulation and its installation shall be in strict accordance with these specifications for each service, and the application technique shall be as recommended by the manufacturer. All insulation types, together with adhesives and finishes shall be submitted and approved prior to installation.

2.3 A sample quantity of each type insulation and each type application shall be installed and approval secured prior to proceeding with the main body of the work. Condensation caused by improper installation of insulation shall be corrected by Installing Contractor. Any damage caused by condensation shall be made good at no cost to the Owner or Architect/Engineer.

2.4 All insulation shall have composite (insulation, jacket or facing, and adhesive used to adhere the facing or jacket to insulation) fire and smoke hazard as tested by Procedure ASTM E084, NFPA 255 and UL 723 not exceeding:

Flame Spread 25
Smoke Developed 50

2.5 Accessories, such as adhesives, mastics and cements shall have the same component ratings as listed above.

2.6 All products or their shipping cartons shall have a label affixed, indicating flame and smoke ratings do not exceed the above requirements.

2.7 APPROVED MANUFACTURERS

A. Calcium silicate materials shall be as manufactured by Schuller International or Calsilite.

B. Glass fiber materials shall be as manufactured by Schuller or Owens-Corning and shall have the same thermal properties, density, fire rating, vapor barrier, etc., as the types specified herein, subject to review by the Engineer.

C. Adhesives shall be as manufactured by Childers, Foster, HB Fuller or Armstrong, and shall have the same adhesive properties, fire rating, vapor seal, etc., as the types specified herein, subject to review by the Engineer.

D. Armaflex by Armstrong.

E. Phenolic foam insulation shall be as manufactured by Kooltherm Insulation (Koolphen).

F. Metal jacketing and fitting covers shall be as manufactured by Childers or RPR Products.

2.8 MATERIALS

A. For insulation purpose piping is defined as the complete piping system including supplies and returns, pipes, valves, automatic control valve bodies, fittings, and flanges and unions.

B. DOMESTIC WATER PIPE INSULATION: Provide with fiberglass insulation in exposed areas.
   1. All insulated domestic water supply shall be insulated with fiberglass ASJ molded type insulation with self sealing lap.
   2. Refer to Part 4 - Schedules, for scope and insulation thickness.

D. METAL JACKETING: Utilize Childers "Strap-On" jacketing. Provide preformed fitting covers for all elbows and tees.

PART 3 - EXECUTION

3.1 All insulation shall be installed in accordance with the manufacturers' recommendations and printed installation instructions, including high density inserts at all hangers and pipe supports to prevent compression of insulation.

3.2 All items required for a complete and proper installation are not necessarily indicated on the plans or in the specifications. Provide all items required as per manufacturers requirements.

3.3 Pipes located outdoors shall be insulated same as concealed piping; and in addition shall have a jacket of 0.016 inch thick, smooth aluminum with longitudinal modified Pittsburg Z-Lock seam and 2" overlap. Jacketing shall be easily removed and replaced without damage. All butt joints shall be sealed with gray silicone. Galvanized banding is not acceptable.

3.5 WATER PIPE INSULATION INSTALLATION

A. The insulation shall be applied to clean, dry pipes with all joints firmly butted together. Where piping is interrupted by fittings, flanges, valves or hangers and at intervals not to exceed 25 feet on straight runs, an isolating seal shall be formed between the vapor barrier jacket and the bare pipe. The seal shall be by the applications of adhesive to the exposed insulation joint faces, carried continuously down to and along 4 inches of pipe and up to and along 2 inches of jacket.

B. All under lap surfaces shall be clean and free of dust, etc. before the SSL is sealed. These laps shall be firmly rubbed to insure a positive seal. A brush coat of vapor retarder shall be applied to all edges of the vapor barrier jacket.

3.6 FIRE RATED INSULATION

A. All pipe penetrations through concrete floor and walls shall be fire rated by applying USG Thermafiber in the space between the concrete and the pipe.

B. The fire rating shall be additionally sealed by using 3M brand model CP 25 or 303 fire barrier caulk and putty.

C. All fire rating material shall be insulated in accordance with manufacturer's printed instructions.

PART 4 - SCHEDULES

4.01 LOW TEMPERATURE SURFACES

		MINIMUM INSULATION THICKNESS (BASED ON FIBERGLASS)
A.	Exposed exterior domestic water pipe:	1-1/2 inch
B.	Interior domestic cold water pipe exposed to freezing temperatures:	1 inch

4.02 HIGH TEMPERATURE SURFACES

		MINIMUM INSULATION THICKNESS
A.	Domestic Hot Water Piping, concealed in chase	1/2 inch

END OF SECTION

SECTION 15410

PLUMBING FIXTURES

PART 1 GENERAL

1.1 SECTION INCLUDES

A. Water Closets.

B. Lavatories.

C. Hose Bibbs.

D. Carriers.

1.2 MEASUREMENT AND PAYMENT

A. No separate payment will be made under this section. Include the cost for this work in bid items for which the work is required.

1.3 RELATED SECTIONS

A. Section 15060 – Hangers and Supports.

1.4 REFERENCES

A. ASME A112.6.1 - Off-the-Floor Plumbing Fixture Supports for Public Use.

B. ASME A112.18.1 - Finished and Rough Brass Plumbing Fixture Fittings.

C. ASME A112.19.2 - Vitreous China Plumbing Fixtures.

D. ASME A112.19.5 - Trim for Water-Closet Bowls.

E. NFPA 70 - National Electrical Code.

1.5 SUBMITTALS FOR REVIEW

A. Product Data: Provide catalog illustrations of fixtures, sizes, rough-in dimensions, utility sizes, trim, and finishes.

1.6 SUBMITTALS FOR INFORMATION

A. Manufacturer's Instructions: Indicate installation methods and procedures.

1.7 SUBMITTALS AT PROJECT CLOSEOUT

A. Maintenance Data: Include fixture trim exploded view and replacement parts lists.

B. Warranty: Submit manufacturer warranty and ensure forms have been completed in Owner's name and registered with manufacturer.

1.8 QUALITY ASSURANCE

Manufacturer Qualifications: Company specializing in manufacturing the Products specified in this Section with minimum three (3) years documented experience.

1.9 REGULATORY REQUIREMENTS

Products Requiring Electrical Connection: Listed and classified by Underwriters Laboratories Inc., as suitable for the purpose specified and indicated.

1.10 DELIVERY, STORAGE, AND PROTECTION

A. Transport, handle, store, and protect products.

B. Accept fixtures on site in factory packaging. Inspect for damage.

C. Protect installed fixtures from damage by securing areas and by leaving factory packaging in place to protect fixtures and prevent use.

PART 2 PRODUCTS

2.1 GENERAL

A. See Plumbing Fixture Schedule on Plans for descriptions.

B. Acceptable Manufacturers:
1. Water Closets: American Standard, Crane, Eljer, Kohler.
2. Lavatories: American Standard, Crane, Eljer, Kohler.
3. Hose Bibbs: Woodford, Zurn, Josam, J.R. Smith.
4. Carriers: Zurn, Josam, J.R. Smith, Wade.

PART 3 EXECUTION

3.1 EXAMINATION

A. Verify existing conditions before starting work.

B. Verify that walls and floor finishes are prepared and ready for installation of fixtures.

C. Verify that electric power is available and of the correct characteristics.

3.2 PREPARATION

A. Rough-in fixture piping connections in accordance with minimum sizes indicated in fixture rough-in schedule for particular fixtures.

B. Coordinate work of this Section with other affected work.

3.3 INSTALLATION

A. Install each fixture with trap, easily removable for servicing and cleaning.

B. Provide chrome plated rigid or flexible supplies to fixtures with loose key stops, reducers, and escutcheons.

C. Install components level and plumb.

D. Install and secure fixtures in place with wall carriers and bolts as required.

E. Seal fixtures to wall and floor surfaces with sealant, color to match fixture.

F. Solidly attach water closets to floor with lag screws. Lead flashing is not intended hold fixture in place.

3.4 INTERFACE WITH OTHER PRODUCTS

Confirm location and size of fixtures and openings before rough-in and installation.

3.5 ADJUSTING

Adjust stops or valves for intended water flow rate to fixtures without splashing, noise, or overflow.

3.6 CLEANING

Clean plumbing fixtures and equipment.

3.7 PROTECTION OF FINISHED WORK

Do not permit use of fixtures.

END OF SECTION

PAGE INTENTIONALLY LEFT BLANK

SECTION 15430

PLUMBING SPECIALTIES

PART 1 GENERAL

1.01 SECTION INCLUDES

A. Backflow preventers.

B. Emergency Eyewash and Shower

C. Drains

1.02 MEASUREMENT AND PAYMENT

A. Payment for backflow preventers and emergency eyewash and shower is on a unit price basis for each.

B. No separate payment will be made for drains under this section. Include the cost for this work in bid items for which the work is required.

1.03 REFERENCES

A. AWWA C511 – Backflow Prevention Devices – Reduced Pressure Principal

1.04 QUALITY ASSURANCE

A. Manufacturer: For each product specified, provide components by same manufacturer throughout.

1.05 SUBMITTALS

A. Submit under provisions of Section 01330 – Submittals.

B. Submit shop drawings and product data under provisions of Division I.

C. Include component sizes, rough-in requirements, service sizes, and finishes.

D. Manufacturer's Installation Instructions: Indicate assembly and support requirements.

1.06 PROJECT RECORD DOCUMENTS

A. Submit under provision of Division One.

B. Record actual locations of equipment, and backflow preventers.

1.07 OPERATION AND MAINTENANCE DATA

A. Submit under provisions of Division One.

B. Maintenance Data: Include installation instructions, spare parts lists, exploded assembly views.

1.08 DELIVERY, STORAGE, AND HANDLING

A. Deliver, store, protect and handle products to site under provisions of Division I.

B. Accept specialties on site in original factory packaging. Inspect for damage.

1.09 EXTRA MATERIALS

A. Furnish under provisions of Division I.

PART 2 PRODUCTS

2.01 BACKFLOW PREVENTERS

A. Manufacturer
1. Febco
2. Watts
3. Clay
4. Wilkens

B. Material description

1. Reduced Pressure Backflow Preventers: AWWA C511; bronze body with bronze and plastic internal parts and stainless steel springs; two independently operating, spring loaded check valves; diaphragm type differential pressure relief valve located between check valves; third check valve which opens under back pressure in case of diaphragm failure; non-threaded vent outlet; assembled with two gate valves, strainer, and four test cocks.

2.02 EMERGENCY EYE WASH STATION

A. Manufacturer

1. Hughes
2. Haws
3. Or equal

B. Material Description
1. Exterior installation with insulation and freeze protection.
2. Corrosion resistant combination emergency shower/eye wash with polished stainless steel shower head, stainless steel receptor and duel soft flow eye spray heads.
3. All equipment and installation must be in accordance with ANSI Z358.1-2009.

2.03 DRAINS

A. Manufacturer
1. Jay R. Smith Mfg, Figure 2495
2. Zurn
3. Or equal

B. Material Description
1. Cast Iron Body with Vandal Proof Grate

PART 3 EXECUTION

3.01 PREPARATION

A. Coordinate cutting forming of roof, floor construction to receive drains to required invert elevations.

3.02 INSTALLATION AND APPLICATION

A. Install specialties in accordance with manufacturer's instructions to permit intended performance.

B. Install back flow preventer horizontally on exceeding 4' above finished floor level. Pipe relief from back flow preventer to nearest drain.

END OF SECTION

SECTION 15480

TANKLESS WATER HEATERS

PART 1 GENERAL

1.1 SECTION INCLUDES

A. Tankless Electric Water Heaters.

1.2 MEASUREMENT AND PAYMENT

A. No separate payment will be made under this section. Include the cost for this work in bid items for which the work is required.

1.3 RELATED SECTIONS

A. Section 15260 – Piping Insulation.

1.4 REFERENCES

A. ANSI/ASHRAE 90.1 Energy Standard for Buildings Except Low Rise Residential Buildings.

B. ANSI/NFPA 70 - National Electrical Code.

C. International Energy Conservation Code – 2000 Edition

1.5 SUBMITTALS

A. Product Data:
   1. Include dimension drawings of water heaters indicating components and connections to other equipment and piping.
   2. Provide electrical characteristics and connection requirements.

B. Manufacturer's Installation Instructions.

1.6 OPERATION AND MAINTENANCE DATA

A. Include operation, maintenance, and inspection data, replacement part numbers and availability, and service depot location and telephone number.

1.7 QUALITY ASSURANCE

A. Perform Work in accordance with State of Texas standards.

B. Ensure products and installation of specified products are in conformance with recommendations and requirements of the following organizations:
   1. National Sanitation Foundation (NSF).
   2. American Society of Mechanical Engineers (ASME).
   3. National Electrical Manufacturers' Association (NEMA).
   4. Underwriters Laboratories (UL).

1.8 DELIVERY, STORAGE, AND HANDLING

A. Deliver, store, protect and handle products to site.

1.9 WARRANTY

A. Provide three (3) year warranty.

B. Warranty: Include coverage of tankless water heater.

PART 2 PRODUCTS

2.1 ELECTRIC WATER HEATERS

A. Manufacturers:

   1. EEMAX

   2. Other acceptable manufacturers offering equivalent products.

B. Type: Automatic, electric, tankless water heater as scheduled on plumbing drawings.

C. Tankless Water Heater shall be an EEMAX Model SP4208 with 4.1 kW rating at 208V to heat 0.5 GPM at a temperature rise of 56 degrees F. Unit shall have ABS-UL 94Vo rated cover. Element shall be replaceable cartridge insert. Unit shall have a replaceable filter in the inlet connector and a flow regulator in the outlet connector. Element shall be iron free, nickel chrome material. Heater shall be fitted with 3/8" compression nuts and sleeves to eliminate need for soldering. Heater shall be installed upright with water connections on top only. Hot water storage tanks prohibited. Unit shall be Eemax or approved equal.

PART 3 EXECUTION

3.1 PREPARATION

A. Coordinate work of this Section with other affected work.

B. Verify that electrical power is available and of the correct characteristics.

3.2 WATER HEATER INSTALLATION

A. Install tankless water heater in accordance with manufacturer's instructions in compliance with authorities having jurisdiction.

B. Coordinate with plumbing piping and electrical work to achieve operating system.

C. Provide all interconnecting electrical wiring necessary for the proper operation of water heater.

D. Provide support for tankless water heater.

END OF SECTION

Section 16010

BASIC ELECTRICAL REQUIREMENTS

PART 1: GENERAL

1.01 SECTION INCLUDES

A. Basic requirements specifically applicable to the work of Division 16 - Electrical Requirements.

B. The Contractor shall furnish equipment, materials, and labor for assembly and installation plus check-out and start-up of the complete electrical system as shown on the Drawings and stipulated in the Specifications.

1.02 MEASUREMENT AND PAYMENT

A. No separate payment will be made under this Section. Include the cost for this work in the lump sum base bid.

1.03 REFERENCES

A. As a minimum requirement, the electrical system shall be constructed in accordance with:

1. American National Standards Institute/National Fire Protection Association (ANSI/NFPA), No. 70 - National Electrical Code (NEC).

2. City of Houston Building Code.

3. Other applicable Codes and Standards as referenced in other Master Specifications.

B. Comply with local, county, state and federal regulations and codes in effect as of date of purchase.

C. Equipment of foreign manufacture must meet U.S. codes and standards.

D. Equipment and materials shall conform to requirements of specification and to the criteria provided in data sheets for the project.

1.04 QUALITY ASSURANCE

A. Product Conformance Certificate and Quality Assurance Release. Submit an overall conformance certificate for electrical components signed by the person responsible for product quality. Specifically identify the purchased material or equipment by project

name and location, purchase order number, supplements, and item number where applicable, including materials and services provided by others. Indicate that all requirements have been met and identify any approved deviations.

B. Field Inspection

1. Electrical work shall be inspected and approved by the local building code inspectors, the City's Construction Inspectors, and the City's Project Manager prior to starting the 7 day test or scheduling training.

2. Contractor shall give a minimum of fourteen days notice to the Construction Inspectors the installation is ready for inspection.

3. Concealed work shall be inspected and approved by building code inspectors and the City's Construction Inspectors before it is covered:

   a. Conduit with stub-ups, underground in duct banks before concrete is poured.

   b. Conduit in slabs, walls and ceilings, complete with boxes.

4. Electrical equipment and materials shall be inspected upon arrival by the Project Manager for compliance with specifications.

1.05 SITE CONDITIONS

A. Take the following site conditions into consideration when fabricating, erecting, installing and wiring electrical equipment under this contract:

1. Plant Location	Houston, Texas	
2. Plant Site Elevation	100'	
3. Seismic Zone	Zone 0	
4. Wind Velocity	90 mph	
5. Temperature, Min./Max.:		
a. Coldest Winter Month	High - 60 degrees F	Low - 41 degrees F
b. Warmest Summer Month	High - 94 degrees F	Low - 73 degrees F
c. Lowest Expected	11 degrees F	

d. Highest Expected	107 degrees F
6. Rainfall:	
a. Annual	45 inches
b. Design	3.4 inches/hour, 8.4 inches/24 hours
7. Design Relative Humidity:	98%
8. Station Barometric Pressure:	
a. Average Annual	29.5 inches Hg Absolute.

PART 2: PRODUCTS

2.01 COMPONENT DESIGN

A. Components utilized in the construction of the material or equipment shall be of the latest proven design, new and in current production. Do not use obsolete components or components to be phased out of production.

2.02 FACTORY INSPECTION

A. Provide free access with prior notice for the Project Manager at all times to the shop where the material or equipment is being fabricated or tested. Provide reasonable facilities for inspection, witnessing tests, and examining records. Give 7 days notice prior to starting tests which are scheduled for factory inspection.

PART 3: EXECUTION

3.01 PREPARATION

A. Verify dimensions and ratings of equipment and materials to ensure proper fit and performance.

3.02 INSTALLATION

A. Install equipment and materials in accordance with the Drawings and manufacturer's written instructions. If field conditions necessitate changes in electrical installation, obtain approval from the City Engineer.

B. Conductor voltage drop shall not exceed 2 percent for feeders and 3 percent for branch circuits.

3.03 DEMONSTRATION

A. Test the electrical system to specification requirements and to demonstrate correct installation and operation of equipment. O & M Manual shall be furnished prior to testing for reference during testing and corrections for final O & M.

B. Before the 7 day test, demonstrate systems to the Construction Inspectors and the Project Manager. Show the systems to be fully operational. All alarms, safeties, and communication points to central and locally must operate in both full-automatic and back-up modes.

C. Operate the system continuously for a period of 7 days in full automatic, without failure, to qualify as acceptable. "Failure" is considered any problem that requires correction by maintenance personnel, such as: high or low water level, any motor alarm, power failure, phase failure, communication failure, PLC failure, transducer failure, or UPS failure. This would exclude conditions not under the control of Contractor, such as: evident lightning strikes, 25-year rains, local power utility power failure longer than the specified duration of service from UPS. Failures due to uncontrollable situations would allow the 7 day test to continue, as soon as test conditions are restored and the City Engineer is notified.

D. Existing water pump stations shall remain in service during the 7 day test.

END OF SECTION

Section 16060

ELECTRICAL DEMOLITION

PART 1: GENERAL

1.01 SECTION INCLUDES

A. Electrical demolition.

1.02 MEASUREMENT AND PAYMENT

A. No separate payment will be made under this section. Include the cost for this work in the lump sum base bid.

1.03 REFERENCES

A. Temporary wiring of systems to maintain operation of facilities while undergoing modifications and demolition shall be provided in accordance with:

1. American National Standards Institute/National Fire Protection Association (ANSI/NFPA), No. 70 - National Electrical Code (NEC), Article No. 590 - Temporary Installations

2. City of Houston Electrical Code.

1.04 SUBMITTALS

A. Annotate existing drawings to sequence the demolition of systems, equipment removal and temporary hook-ups.

B. Schedule with Project Manager for required shut-downs to accommodate system demolition and installation of temporary facilities.

1.05 QUALITY ASSURANCE

A. Verify field measurements and circuiting arrangements are as shown on Drawings.

B. Verify that abandoned wiring and equipment serve only abandoned facilities.

C. Demolition drawings are based on casual field observation and existing record documents. Report discrepancies to City Engineer before disturbing existing installation.

D. By beginning demolition, installer accepts existing conditions and warrants that he will maintain service to equipment and items not scheduled or indicated for removal, and that he will return to the City all items and systems in good operating condition.

PART 2: PRODUCTS

2.01 MATERIALS AND EQUIPMENT

A. Materials and equipment for patching and extending work: As specified in individual Sections.

2.02 DESIGN AND CONSTRUCTION

A. The temporary electrical wiring and facilities shall be designed and constructed in strict compliance with NEC - Article No. 590, Temporary Installations and the City of Houston Electrical Code.

PART 3: EXECUTION

3.01 PREPARATION

A. Disconnect electrical systems in walls, floors, and ceilings scheduled for removal.

B. Coordinate utility service outages with utility company to provide continuous service to operating equipment.

C. Provide temporary wiring and connections to maintain existing systems in service during construction. When work must be performed on energized equipment or circuits, notify the City and get approval. Use personnel experienced in such operations.

D. Existing Electrical Service: Maintain existing system in service until new system is complete and ready for service. Disable system only to make switchovers and connections. Obtain permission from the City's Project Manager at least one week before partially or completely disabling system. Minimize outage duration.

E. Adding Load to Existing Electrical System: Perform a load analysis to assure that the existing power distribution system (MCC, service, conductors, panel, breakers, feeders, branch circuits, etc.) is not overloaded if additional load is added to existing equipment.

F. Existing electrical conduit and wire may not be reused to feed new equipment except by written authorization from the City of Houston.

3.02 DEMOLITION AND EXTENSION OF EXISTING ELECTRICAL WORK

A. Remove, relocate, and extend existing installations to accommodate new construction.

B. Remove abandoned wiring to source of supply.

C. Remove exposed abandoned conduit, including abandoned conduit above accessible ceiling finishes. This includes all associated support and anchoring systems. Cut conduit flush with walls and floors, and patch surfaces.

D. Disconnect abandoned outlets and remove devices. Remove abandoned outlets if conduit servicing them is abandoned and removed. Provide blank cover for abandoned outlets which are not removed.

E. Disconnect and remove abandoned panelboards and distribution equipment.

F. Disconnect and remove electrical devices and equipment serving utilization equipment that has been removed.

G. Repair adjacent construction and finishes damaged during demolition and extension work.

H. Maintain access to existing installations which remain active. Modify installation or provide access panel as appropriate.

I. Extend existing installations using materials and methods as specified for new work.

3.03 DISPOSAL AND SALVAGE

A. Salvage electrical and instrumentation equipment removed from existing facilities for City's reuse.

B. Material and equipment which can be reused or salvaged remains the property of the City of Houston. Equipment to be retained by the City of Houston shall be delivered to a specified location by the Contractor.

C. Materials and equipment which cannot be reused or salvaged will be removed and disposed by the Contractor.

3.04 CLEANING AND REPAIR

A. Clean and repair existing materials and equipment which remain or are to be reused.

B. Panelboards: Clean exposed surfaces and check tightness of electrical connections. Replace damaged circuit breakers and provide closure plates for vacant positions. Provide typed circuit directory showing revised circuiting arrangement.

3.05 INSTALLATION

A. Install relocated materials and equipment under the provisions of Section 02220 - Demolition.

B. Electrical installations and materials shall conform to the current issue of the following standard and codes: American National Standards Institute/National Fire Protection Association (ANSI/NFPA), No. 70 - National Electrical Code (NEC), City of Houston Electrical Code, and material and workmanship.

C. All material shall be free of defects and in safe working condition which will meet electrical classification and functional requirements.

D. Testing shall be made during the course of construction or at the completion of the job. These tests shall be made by the electrical contractor. The contractor shall furnish all test equipment.

E. The job will not be complete until work has been inspected and trial start up has been successfully completed.

END OF SECTION

Section 16111

CONDUIT, FITTINGS, AND BODIES

PART 1: GENERAL

1.01 SECTION INCLUDES

A. Conduit, fittings, and bodies.

1.02 MEASUREMENT AND PAYMENT

A. No separate payment for bonded plastic lining for concrete structures will be made under this section. Include the cost for this work in the lump sum base bid.

1.03 RELATED SECTIONS

A. Specification 16195, Electrical Identification.

B. Specification 16402, Underground Duct banks.

1.04 REFERENCES

A. American National Standards Institute (ANSI):

1. ANSI C 80.1 - Rigid Steel Conduit - Zinc Coated.
2. ANSI C 80.4 - Fittings for Rigid Metal Conduit.
3. ANSI C 80.5 - Rigid Aluminum Conduit.

B. Federal Specifications:

1. W-C-58 C - Conduit Outlet Boxes, Bodies Aluminum and Malleable Iron.
2. W-C-1094 - Conduit and Conduit Fittings Plastic, Rigid.
3. WW-C-566 C - Flexible Metal Conduit.
4. WW-C-581 D - Coatings on Steel Conduit.

C. National Electrical Manufacturers Association (NEMA):

1. NEMA RN 1 - Polyvinyl-Chloride Externally Coated Galvanized Rigid Steel Conduit and Electrical Metallic Tubing.

2. NEMA TC 2 - Electrical Plastic Tubing (EPT) and Conduit (EPC-40 and EPC-80).

3. NEMA TC 3 - PVC Fittings for Use with Rigid PVC Conduit and Tubing.

D. National Fire Protection Association (NFPA), ANSI/NFPA 70 - National Electrical Code (NEC).

E. Underwriters' Laboratories (UL):

1. UL 1 - Flexible Metal Electrical Conduit.

2. UL 6 - Rigid Metal Electrical Conduit.

3. UL 514 B - Fittings for Conduit and Outlet Boxes.

4. UL 651 - Schedule 80 Rigid PVC Conduit.

5. UL 651 A - Type EB and A Rigid PVC Conduit and HDPE Conduit.

6. UL 886 - Electrical Outlet Boxes and Fittings for Use in Hazardous Locations.

7. UL 1684: Reinforced Thermosetting Resin Conduit

F. City of Houston Electrical Code.

1.05 SUBMITTALS

A. Make submittals following Section 01330 - Submittal Procedures:

1. Manufacturer's cut sheets, catalog data.

2. Installation, terminating and splicing procedure.

3. Instruction for handling and storage.

4. Dimensions and weight of products.

5. Code compliance certificate.

6. Conformance certificate.

1.06 QUALITY ASSURANCE

A. Rigid steel conduit shall pass the bending, ductility, and thickness of zinc coating tests described by ANSI C 80.1.

B. Flexible conduit shall pass the tension, flexibility, impact, and zinc coating test described by UL 1.

C. Nonmetallic conduit and fittings shall pass the test requirements of NEMA TC 2, UL 651 and 651 A and Federal Specification W-C-1094 A.

1.07 DELIVERY STORAGE AND HANDLING

A. Package conduit in 10-foot bundles maximum with conduit and coupling thread protectors suitable for indoor and outdoor storage. Package fittings in manufacturer's standard quantities and packaging suitable for indoor storage. Package plastic-coated rigid conduit, fittings, and bodies in such a manner as to protect the coating from damage during shipment and storage.

B. Store conduit above ground on racks to prevent corrosion and entrance of debris.

C. Protect plastic conduit from sunlight.

PART 2: PRODUCTS

2.01 ACCEPTABLE MANUFACTURERS

A. Rigid Steel Conduit:

1. Allied Tube and Conduit.

2. Triangle Wire and Cable, Inc.

3. Wheatland Tube Company.

B. Rigid Aluminum Conduit:

1. Allied Tube and Conduit.

2. Republic Conduit.

3. Wheatland Tube Company.

4. Sapa Extrusions.

C. PVC Coated Steel Conduit:

1. Robroy Industries, Inc.

a. Rob-Roy Red

b. Plasti-Bond Red

c. Perma-Cote Green

D. PVC Rigid Conduit:

1. Cantex.

2. Carlon Industries, Inc.

E. Conduit Fittings and Bodies:

1. Appleton Electric.

2. Crouse-Hinds.

3. Killark Electric Manufacturing Company.

4. O-Z/Gedney.

F. Epoxy Fiberglass Conduit:

1. Champion Fiberglass.

G. Liquidtight Flexible Conduit:

1. Anamet, Inc.

2. Electriflex Company.

3. Triangle Wire and Cable, Inc.

2.02 MATERIALS AND EQUIPMENT

A. Design Conditions. Use electrical conduit, fittings, and bodies designed for service in areas as specified in Section 16010 - Basic Electrical Requirements and this section to form a continuous support system for power, control, and instrument cables or any combination thereof.

B. Conduit and Fittings:

1. Rigid Steel Conduit and Fittings.

a. Rigid steel conduit and rigid steel conduit bends, nipples, and bodies shall be hot-dipped galvanized and shall comply with the latest ANSI C 80.1, UL 6, Federal Specification WW-C-581 D, and NEC Article 346-15.

b. Mild steel tubing shall be used for conduit, nipples, and couplings, and shall be free of defects on both the inner and outer surfaces.

c. Fittings and bodies and covers for rigid steel conduit shall be steel or cast-iron and shall comply with ANSI C 80.4, UL 514 B, and Federal Specification W C-58 C.

2. PVC-Coated Rigid Steel Conduit and Fittings

a. PVC-coated conduit, fittings, bodies, and covers shall conform to NEMA RN 1 (Type A). PVC-coated rigid metal conduit must be UL listed with PVC as the primary corrosion protection. Conduit bodies shall conform to UL 514 B and Federal Specification W C 58 C. PVC-coated fittings for general service locations must be UL listed with the PVC as the primary corrosion protection. Provide sufficient coating for touch-up after installation.

b. PVC-coated couplings shall be of the ribbed type.

c. Condulets shall be Form 8, covers shall have encapsulated stainless steel thumb screws.

d. Condulets and covers shall be of malleable iron or ferroalloy material before coating.

e. Urethane coating shall be a minimum of 2 mil thickness on the interior of the conduit and the interior of fittings, condulets, covers, and bodies.

3. Liquidtight Flexible Metal Conduit and Fittings

a. Use liquidtight flexible metal conduit manufactured in accordance with UL 1 and Federal specification WW-C-566 C.

b. Fittings used with liquidtight flexible metal conduit shall be the PVC-coated type. Thoroughly ground the conduit to the fittings and through the fittings to the box or enclosure to which it is attached.

c. Couplings and fittings for use in hazardous areas shall comply with UL 886, NEC Article 501-4 (a&b), and Federal Specification W-C-586 C.

4. Epoxy Fiberglass Conduit and Fittings

a. Use epoxy fiberglass conduit, bends and fittings which comply with UL 1684 and NEC Article 352 for underground applications.

b. Where used for bends greater than 15 degrees in underground duct bank conduits, provide epoxy fiberglass bends with a deep socket PVC coupling factory attached to each end of each bend.

c. When used for stub-ups, provide an epoxy fiberglass elbow with a vertical epoxy fiberglass nipple to extend the conduit upward to a termination point. Join the elbow to the nipple with an epoxy fiberglass straight socket connection joined with epoxy adhesive. On the top of the epoxy fiberglass nipple, provide an epoxy fiberglass conduit adapter to transition to rigid aluminum conduit. On the underground end of the epoxy fiberglass elbow, provide a factory attached deep socket PVC coupling to transition to Schedule 40 PVC conduit.

d. Epoxy fiberglass conduit shall have a wall thickness of 0.070" for sizes ¾" through and including 4" conduit. A wall thickness of 0.096" shall be provided for 5" epoxy fiberglass conduit.

5. PVC Conduit and Fittings. Use PVC conduit, bends, and fittings, which comply with NEMA TC 2, W-C-A, and NBC Article 347-17 for above ground and underground installation. Conduit shall be Schedule 40.

PART 3: EXECUTION

3.01 PREPARATION

A. Ensure that the conduit system to be installed is sized properly for the cable and wire requirements.

B. Verify the actual physical conduit route from the conduit plan drawings and prepare the conduit support system.

C. Verify the equipment locations to which the conduit will be connected and determine detail requirements for connections.

3.02 INSTALLATION

A. Install Rigid Aluminum Conduit (RAC) in all locations except as noted below.

B. In rooms where chemicals are pumped, metered or stored, install epoxy fiberglass conduit with epoxy fiberglass boxes and fittings.

C. Install Schedule 40 PVC conduits in reinforced duct banks or encased in concrete slabs. For stub-ups, use epoxy fiberglass elbows as required in Section 16402.

D. Run exposed conduit parallel or perpendicular to walls, ceilings or main structural members. Group multiple conduits together where possible. Conduit shall not interfere with the use of passageways, doorways, overhead cranes, monorails, equipment removal areas or working areas. In no case shall conduit routing present a safety hazard, trip hazard, or interfere with normal plant operating and maintenance procedures. A minimum overhead clearance of 8 feet shall be maintained in passageways. All conduits installed across walkways shall have concrete or aluminum trip plates installed.

E. Installation and support of conduit shall be from steel or concrete structures in accordance with the standard detail drawings. Furnish necessary conduit straps, clamps, fittings and support for the conduit in accordance with the standard details.

F. Identify conduit at termination points like MCC, light fixtures, control panels, receptacles, panels, and junction boxes.

G. Not more than 3 equivalent 90 degree bends will be permitted between outlets, boxes or termination points. Provide bonded expansion fittings at building expansion joints.

H. Install conduit runs so that they are mechanically secure, mechanically protected from physical harm, electrically continuous, and neat in appearance. The interiors of conduit shall provide clean, smooth raceways through which conductors may be drawn without damage to the insulation. Make threaded connections wrench tight.

I. Cut conduit square with a power saw or a rotary type conduit cutter designed to leave a flat face. Do not use plumbing pipe cutters for cutting conduit. Ream the cut ends of conduit with a reamer, designed for the purpose to eliminate rough edges and burrs. Threads shall be cut with standard conduit dies providing 3/4-inch taper per foot, allowing the proper length so that joints and terminals may be made up tight and the ends of the conduit not deformed. Keep dies sharp and use a good quality threading oil continuously during the threading operation. Remove metal cuttings and oil from the conduit ends after the threads are cut and paint threads before connections are made. Use non-corrosive Carbozinc No. 11 as manufactured by the Carboline Company, coal tar enamel or zinc rich epoxy primer on the threads of steel conduit before connections are made.

J. Use strap wrenches only to tighten joints in plastic coated rigid steel conduit. Replace all conduit and fittings with damage to the plastic coating, such as cuts, nicks and threader chuck jaw marks. Use a solvent, or the same patching material to seal around the edges of conduit fitting covers.

K. Make changes in direction of conduit using elbows or fittings. Do not use pull boxes to make direction changes unless specifically designated otherwise.

L. Field fabricated bends shall be free of indentations or elliptical sections. The radius of the bend shall not be less than 6 times the smallest diameter of the raceway.

M. Protect all conduit terminations from mechanical injury. Prevent the entry of moisture and foreign matter into the conduit system by properly capping terminations.

N. Avoid trapped runs of conduit, if possible. When they are necessary, provide drainage using a "tee" condulet equipped with a drain. Conduit is likely to pass through areas with a temperature differential of 20 F or more. Seal penetrations with a proper seal fitting at the wall or barrier between such areas. For conduit passing through walls separating pressurized areas from non-pressurized areas, install sealing fittings at the wall on the non-pressurized side.

O. Fit all conduit crossing building or structure expansion joints with approved expansion fittings, except that fittings will not be required when conduit crossing an expansion joint is supported on trapeze hangers in such a way that at no time will the conduit be under stress due to expansion. Unless otherwise indicated on Drawings, install expansion fittings every 300 feet within a straight conduit run and where conduit crosses building expansion joints, using bonding straps to ensure ground continuity.

P. Where conduit terminates in sheet metal enclosures, use threaded hubs such as Myers Scru-tite Hubs. Restrict side penetrations of enclosures to the lower 25% of the enclosure.

Q. Provide flexible Liquidtight metallic conduit where necessary to allow for movement or to localize sound or vibration, at transformers, at motors and any other rotating equipment. Flexible metal conduit shall not be used.

R. Seal all openings or holes where conduits pass through walls or floors. When passing through a firewall or floor, use a fire-rated seal per the typical detail included in the Drawings. Certain walls, as indicated on the drawings, require environmental (air-tight) seals; seal as indicated on the Drawings.

S. Install explosion-proof seals in conduit runs crossing or entering a hazardous classified area (as shown on Drawings). Install type CSBE removable sealing fittings to seal pump cables between wet well and first junction box. If a junction box is not used, install the CSBE seals at the wet well and the control panel.

T. Parallel runs of conduit may be supported by structural steel racks. When two or more racks are arranged one above the other, provide vertical separation of not less than 12 inches between racks, unless otherwise indicated on Drawings. Space conduits on the racks at least enough to provide 1/4-inch clearance between hubs on adjacent conduits at terminations and to allow room for fittings.

U. Fill conduit racks no more than 75 percent of their capacity, providing usable space for future conduit. To ensure this, conduits leaving the rack horizontally shall be offset up or down so that future conduits may be installed in the space remaining. Construct conduit racks to permit access for wire or cable pulling at all pull points, even when future conduits are added to fill the racks.

V. Where conduit racks are supported on rods from beam clamps or by some other non-rigid suspension system, install rigid supports at no more than 50-foot intervals to give lateral stability to the rack.

W. Conduit racks or hangers must in no way interfere with machinery (or its operation), piping, structural members, process equipment, or access to anticipated future equipment. Refer to architectural, structural, equipment layout and piping drawings to ensure that this requirement is met. Label high voltage conduit with the circuit phase-to-phase voltage by means of a firmly attached tag or label of approved design at each conduit termination, on each side of walls or barriers pierced and at intervals not exceeding 200 feet along the entire length of the conduit.

X. Support conduit sizes 2 inches and larger at spacings not exceeding 10 feet and conduit sizes 1-1/2 inches and smaller at spacings not exceeding 8 feet.

Y. The means of fastening conduit to supports shall be: by one hole malleable iron conduit straps secured by wood screws to wood and by bolts with expansion anchors to concrete or masonry; by "Korn" clamps or U-bolts to other surfaces. Use "clamp backs" when strapping conduits to walls, column faces, or other such surfaces.

Z. Support conduit runs with Type 316 stainless steel conduit clamps, hangers, straps and metal framing channel attached to structural steel members with Type 316 stainless steel hardware. Conduits of 1-1/2 inch size or less may be supported by one-hole conduit straps on concrete, tile or steel work, but for larger size conduit, 2-hole straps shall be used.

AA. Install conduits supported form building walls with at least 1/4-inch clearance from the wall to prevent the accumulation of dirt and moisture behind conduit.

BB. Conduit tags shall be installed: on each side of the wall where conduits pass through walls, at each location where conduits stubup, at each pull box, on all cables in underground pull boxes, at termination points in switchgear, and at termination points at panelboards.

END OF SECTION

Section 16120

600-VOLT BUILDING WIRE AND CABLE

PART 1: GENERAL

1.01 SECTION INCLUDES

A. Specifications for 600-volt building wire and cable.

1.02 MEASUREMENT AND PAYMENT

A. No separate payment for bonded plastic lining for concrete structures will be made under this section. Include the cost for this work in the lump sum base bid.

1.03 REFERENCES

A. American National Standards Institute/National Fire Protection Association (ANSI/NFPA), NFPA 70 - National Electrical Code (NEC), Article 310 - Conductors for General Wiring

B. Underwriter's Laboratories (UL)

1. UL 83: Thermoplastic Insulated Wires and Cables

2. UL 1063: Machine Tool Wires and Cables

C. American Society for Testing and Materials (ASTM)

1. ASTM B 3: Soft or Annealed Copper Wires

2. ASTM B 8: Concentric-Lay-Stranded Copper Conductors, Hard, Medium Hard, Soft

D. Insulated Cable Engineers Association (ICEA), ICEA S-61-402: Thermoplastic-Insulated Wire and Cable for the Transmission and Distribution of Electrical Energy (NEMA WC-5)

E. City of Houston Electrical Code

1.04 SUBMITTALS

A. Make submittals following Section 01330 - Submittal Procedures.

1. Manufacturer's cut sheets, catalog data

2. Instruction for handling and storage

3. Dimensions and weight

4. Conformance certificate

1.05 QUALITY ASSURANCE

A. Tests. Cable shall meet all the requirements of Part 6 of ICEA S-61-402.

B. Conformance Certificate and Quality Assurance Release: Submit a conformance certificate signed by the person responsible for product quality. The certificate shall specifically identify the purchased material or equipment; such as by the project name and location, purchase order number, supplements, and item number where applicable, including materials and services provided by others. The certificate shall indicate that requirements have been met and identify any approved deviations.

1.06 DELIVERY, STORAGE AND HANDLING

A. Ship wire and cable on manufacturer's standard reel sizes unless otherwise specified. Where cut lengths are specified, mark reel footage accordingly. Each reel shall contain one continuous length of cable. Provide impact protection by wood lagging or suitable barrier across the traverse of the reel. Provide moisture protection by using manufacturer's standard procedure or heat shrinkable self-sealing end caps applied to both ends of the cable.

PART 2: PRODUCTS

2.01 ACCEPTABLE MANUFACTURERS

A. American Insulated Wire Corporation

B. Carol Cable Company, Inc.

C. General Cable Company

D. Okonite Company

E. Rome Cable Company

F. Triangle Wire and Cable, Inc.

2.02 MATERIALS AND EQUIPMENT

A. Design. Provide cable designated as XHHW-2 stranded single conductor type and UL 83 and UL 1063 listed, rated 600 volts and certified for continuous operation at maximum conductor temperature of 90 C in dry locations and 75 C in wet locations in conduit. MTW stranded will be used in control panels.

B. Conductors. Provide conductors which are Class B, concentric stranded, annealed uncoated copper with physical and electrical properties complying with ASTM B 3 and ASTM B 8 and Part 2 of ICEA S-61-402.

C. Insulation. Each conductor shall be PVC insulated and nylon jacketed to meet the requirements of Part 3 of ICEA S-61-402. The insulation thickness shall match the dimensions listed in Table 310-13 of the National Electrical Code (NEC) for type XHHW-2 wire.

D. Wire Marking

1. Wire marking shall be in accordance with National Electrical Code (NEC) Article 310-11 and shall be printed on the wire insulation at 2-foot intervals.

2. The printing method used shall be permanent and the color shall sharply contrast with the jacket color.

E. The single conductor color coding shall be as follows:

System Voltage	A	B	C	Neutral
120/208 Volt 3Ph/4w	Black	Red	Blue	White
120/240 Volt 3Ph/4w	Black	Orange	Blue	White
277/480 Volt 3Ph/4w	Brown	Purple	Yellow	Grey
Motor Control	1	Black		
	2	Red		
	3	Blue		
Ground		Green		

PART 3: EXECUTION

3.01 PREPARATION

A. Complete the cable raceway systems and underground duct banks before installing cables.

B. Verify sizing of raceways and pullboxes to ensure proper accommodation for the cables.

C. Check the length of the cable raceway system against the length of cable on the selected reel.

D. Clean conduits of foreign matter before cables are pulled.

3.02 INSTALLATION

A. Wiring Methods

1. Use wiring methods indicated on Drawings.

2. In general, use XHHW-2 stranded building wire for lighting, power and control wiring where conductors are enclosed in raceways like in above ground conduit system or in underground duct banks, or inside control panels.

3. Do not use solid conductors.

4. Use conductors not smaller than No. 12 AWG stranded for general lighting circuits.

5. Use conductors not smaller than No. 14 AWG stranded for control circuits, except when part of a multiconductor cable or internal panel wiring.

6. In general, do not splice conductors unless approved by the City Engineer.

7. Splices associated with taps for lighting and control circuits are allowed without approval.

8. Make splices in accessible junction boxes.

B. Single Conductor in Conduit and Ductbank

1. Install cables in accordance with the manufacturer's instructions and the National Electrical Code (NEC), Chapter 3- Wiring Methods and Materials. Do not exceed maximum wire tension, maximum insulation pressure and minimum bending radius.

2. Pull cables into conduits using Polywater J pulling compound.

C. Single Conductor in Cable Tray (NOT USED)

D. Preparation for Termination

1. Make 600-volt insulated conduit terminations and splices with heat shrinkable sleeves and seals.

2. Terminal lugs and connectors for all sizes of conductors shall be crimp-on type.

3. For size 1/0 AWG and larger, crimp-on lugs shall have the long barrel with 2-hole tongues except in places where termination space is limited.

E. Tests

1. In general, test insulation integrity of the wiring system before terminating.

2. Make sure to disconnect sensitive electronic equipment before testing insulation.

3. Use a 500 VDC megohmmeter and perform the wire system insulation test in accordance with the operating instructions.

F. Termination. After the 600-volt wiring system has been tested with satisfactory results, reconnect wire.

END OF SECTION

Section 16123

MEDIUM VOLTAGE POWER CABLE

PART 1: GENERAL

1.01 SECTION INCLUDES

A. Specifications for medium voltage power cable.

1.02 MEASUREMENT AND PAYMENT

A. No separate payment will be made for work performed under this Section.

1.03 RELATED SECTIONS

A. Section 16195 – Electrical Identification.

1.04 REFERENCES

A. American Society for Testing and Materials (ASTM).

1. ASTM B3: Soft or Annealed Copper Wires

2. ASTM B8: Concentric-Lay-Stranded Copper Conductors, Hard, Medium Hard, Soft

B. Institute of Electrical and Electronics Engineers (IEEE), IEEE 383-2.5.

C. Insulated Cable Engineers Association (ICEA).

1. ICEA P-45-482: Short-Circuit Performance of Metallic Shielding and Sheaths of Insulated Cable.

2. ICEA S-68-516: Ethylene-Propylene-Rubber-Insulated Wire and Cable for the Transmission and Distribution of Electrical Energy (NEMA WC-8).

D. Underwriters' Laboratories (UL), UL 1072: Medium-Voltage (Type MV) Solid-Dielectric Cables

E. American National Standards Institute/National Fire Protection Association (ANSI/NFPA), 70 National Electrical Code (NEC), Chapter No. 3 - Wiring Methods and Materials.

1.05 SUBMITTALS

A. Submit the following under the provisions of Section 01330 - Submittal Procedures.

1. Completed engineer's data sheets
2. Completed manufacturer's data sheets
3. Manufacturer's cut sheets, catalog data
4. Name of electrical testing company to be employed
5. Impulse voltage test record
6. Installation, terminating and splicing procedure
7. Instruction for handling and storage
8. Dimensions and weight
9. Conformance certificate

1.06 QUALITY ASSURANCE

A. Tests

1. Cable shall be tested at the factory to confirm that the cable complies with requirements of Parts 2, 3, 4, and 5 of ICEA S-68-516. Test methods shall comply with the requirements of Part 6 of ICEA S-68-516.

2. Where applicable, the cable shall meet the requirements of the vertical tray flame test as described in IEEE 383-2.5.

1.07 DELIVERY STORAGE AND HANDLING

A. Ship cable on manufacturer's standard reel sizes unless otherwise specified. Where cut lengths are specified, mark reel footage accordingly. Each reel shall contain one continuous length of cable.

Reels shall be of the type specified on the data sheets. Provide impact protection by wood lagging or suitable barrier across the traverse of the reel. Provide moisture protection by manufacturer's standard procedure or heat shrinkable self-sealing end caps applied to both ends of the cable.

PART 2: PRODUCTS

2.01 ACCEPTABLE MANUFACTURERS (If requirements of this specification are satisfied)

A. Okonite Company

B. Pirelli Cable Corporation

C. Rome Cable Corporation

D. Southwire Corporation

2.02 MATERIALS AND EQUIPMENT

A. Design. Provide cable with the following design characteristics. Cable shall be UL listed type MV-90, rated at 5 kV with 133% insulation level (115 mils). Cables will be used on three phase, 60 HZ systems operating at 2.4 kV.

B. Conductors. Provide conductors which are bare, uncoated copper, class B stranded per ASTM B3, B8 and B33.

C. Conductor Shielding. Use conductor with a shield composed of extruded semi-conducting compound applied in accordance with the Part 2 of ICEA S-68-516.

D. Insulation. Conductor insulation shall be extruded ethylene propylene rubber (EPR) with a thickness of 115 mils (5 kV).

E. Insulation Shielding. Provide each insulated conductor with an extruded insulation shield consisting of a nonmetallic covering located directly over the insulation and a copper tape shield helically applied over the insulation shield. The materials used in the insulation shield and the method of construction shall comply with Part 4 of ICEA S-68-516 and UL-1072.

1. The short-circuit capacity of the conductor insulation shielding shall be the larger value of either the capacity defined in ICEA P-45-482 or that shown in the following table:

Shield Diameter Inches	Short-Circuit Amps for 8 Cycles	Short-Circuit Amps for 16 Cycles
1/2	1400	1000
3/4	2100	1500
1	2800	2000
1-1/4	3500	2500
1-1/2	4200	3000
1-3/4	5000	3500
2	5700	4000
2-1/4	6400	4500
2-1/2	7100	5000
2-3/4	7800	5500
3	8500	6000

F. Jacket. When medium voltage power cables are enclosed in conduit, duct or in other raceway systems, the cables shall be of the non-armored type with an overall nonmetallic PVC jacket covering single conductor cables as specified conforming to the requirements of Part 4 of ICEA S-68-516.

G. Splices. None will be permitted.

H. Cable Terminations. Tyco Electronics, Energy Products Division, Raychem Type HVT-Z for terminations on 5 kV cable. Use non-skirted heat shrinkable stress control tubing for indoor terminations.

I. Motor Connections. Tyco Electronics, Energy Products Division, Raychem GelCap 8 Motor Connection Kits.

J. Marking. Mark the jacket of cables as required by paragraphs 201, 202, 203, and 204 of UL 1072, unless otherwise specified.

K. Pulling lubricant. Polywater J.

PART 3: EXECUTION

3.01 PREPARATION

A. Complete cable raceway systems, underground duct banks, and cable support systems before installing cables.

B. Verify sizing of raceways and pullboxes to ensure proper accommodation for the cables.

C. Check the length of the cable raceway system against the length of cable on the selected reel.

D. Do not install or work on insulated or jacketed cables in temperatures below 32 degrees F.

3.02 INSTALLATION

A. Cable in Conduit and Ductbank

1. Clean conduits of all foreign matter before cables are pulled.

2. Install cables in accordance with the manufacturer's instructions and the National Electrical Code (NEC). Do not exceed maximum wire tension, maximum insulation pressure, and minimum bending radius.

3. Pull cables into conduits using adequate lubrication to reduce friction. Lubricants must not be harmful to the conductor insulation.

B. Cable in Tray (Not Used)

C. Preparation for Termination

1. Install the minimum number of splices possible.

2. Make terminations of cables at switchgear and motors as indicated in Paragraph 2.02 of this specification.

3. Use copper crimp-on terminal lugs and connectors for all sizes of conductors.

4. Use crimp-on lugs with long barrel and two-hole tongues, except in places where terminations space is limited.

D. Cable Identification

1. Attach conduit tags to medium voltage power cables in manholes and at termination points in switchgear, transformer motors, VFDs and similar location. See Specification Section 16195, Electrical Identification.

E. Fire Proofing

1. Fireproof each set of feeder cables which enter a manhole in a conduit (A, B, and C phases) for the entire length exposed in a manhole. Use 2 layers of Scotch 77 tape with Scotch 69 glass cloth overlay wrapped in the opposite direction. Provide a minimum 50 percent overlay of each layer of Scotch 77 tape.

F. Tests

1. Before connecting the medium voltage cables, test insulation integrity.

2. Contractor shall employ an electrical testing company with minimum 10 years experience in testing industrial electrical equipment, to perform Megger and Partial Discharge tests on newly installed cables. The technician performing the tests shall have a minimum of two years experience performing the specified tests and shall be certified by the manufacturer of the test equipment.

   Submit name and qualifications of the electrical testing company and testing technicians for review and approval by owner's representative prior to testing cables.

3. The megger test shall be the first test performed. Use a 10 kV DC megohmmeter, Biddle Megger No. MIT-1020, and perform cable insulation tests in accordance with the operating instructions. The technician performing the megger test shall determine if the tested cable is satisfactory and suitable for partial discharge testing.

4. Termination

   a. After the cable has been megger tested with satisfactory results, terminate the medium voltage cable at both ends to designated terminal points.

   b. Tighten connection bolts with a torque wrench to specified torque levels.

5. The Partial Discharge test shall be the second test performed. The cable system to be tested shall be energized at the normal system voltage after all splices, terminations and connections to equipment have been made. The tests shall be made using a Hipotronics/Robinson DDX-7000 SL Digital Partial Discharge Detector. Analysis of Partial Discharge tests shall be made with DDX-DA3 software. A report shall be generated for each tested cable which includes: PD Value versus Phase, PD value versu Time Intensity, Fractal Chart and Fingerprint. The technician performing the Partial Discharge Test shall determine if the tested cable is satisfactory or the cable must be replaced.

6. Record test data for each cable test, complete with signatures of the City Engineer or designated representative who witnesses the testing. All Megger and Partial Discharge cable tests for the entire project shall be combined in three ring binders and submitted as part of the O&M manuals.

END OF SECTION

Section 16126

INSTRUMENTATION CABLE

PART 1: GENERAL

1.01 SECTION INCLUDES

A. Specifications for instrumentation cable.

1.02 MEASUREMENT AND PAYMENT

A. No separate payment will be made under this section. Include the cost for this work in the lump sum base bid.

1.03 REFERENCES

A. American Society for Testing and Materials (ASTM).

1. ASTM B3: Soft or Annealed Copper Wires.

2. ASTM B8: Concentric-Lay-Stranded Copper Conductors, Hard, Medium Hard, Soft.

3. ASTM B33: Tinned Soft or Annealed Copper Wire for Electrical Purposes.

B. Institute of Electrical and Electronics Engineers (IEEE), IEEE 383-2.5: IEEE Standard for Type Test of Class IE Electric Cables, Field Splices, and Connections for Nuclear Power Generating Stations.

C. Insulated Cable Engineers Association (ICEA).

1. ICEA S-61-402: Thermoplastic-Insulated Wire and Cable for the Transmission and Distribution of Electrical Energy (NEMA WC-5).

2. ICEA S-66-524: Cross-Linked-Thermosetting-Polyethylene-Insulated Wire and Cable for the Transmission and Distribution of Electrical Energy (NEMA WC-7).

3. ICEA S-68-516: Ethylene-Propylene-Rubber-Insulated Wire and Cable for the Transmission and Distribution of Electrical Energy (NEMA WC-8).

D. Underwriters' Laboratories (UL).

1. UL 44: Rubber Insulated Wires and Cables.

2. UL 83: Thermoplastic Insulated Wire and Cables.

E. American National Standards Institute/National Fire Protection Association (ANSI/NFPA), NFPA No. 70 - National Electrical Code (NEC), Chapter No. 3 - Wiring Methods and Materials, Article 725 - Class 1, Class 2, and Class 3 Remote Control, Signaling, and Power-Limited Circuits.

1.04 SUBMITTALS

A. Submit the following under the provisions of Section 01330 – Submittal Procedures:

1. Completed engineer's data sheets from this specification or manufacturer's data sheets, cut sheets, and catalog data.

2. Installation, terminating and splicing procedure (including bending radius and pulling tension data).

3. Instruction for handling and storage.

4. Dimensions and weight.

1.05 QUALITY ASSURANCE

A. Tests

1. Cable shall be tested at the factory to confirm that the cable complies with requirements of ICEA Section 7.7.9 of S-66-524 or 7.5.9 of S-68-516.

2. Where applicable, the cable shall meet the requirements of the vertical tray flame test as described in IEEE 383-2.5.

1.06 DELIVERY, STORAGE AND HANDLING

A. Ship cable on manufacturer's standard reel sizes unless otherwise specified. Where cut lengths are specified, mark reel footage accordingly. Each reel shall contain one continuous length of cable. Reels shall be of the type specified on the data sheets. Provide impact protection by wood lagging or suitable barrier across the traverse of the reel. Provide moisture protection by manufacturer's standard procedure or heat shrinkable self-sealing end caps applied to both ends of the cable.

PART 2: PRODUCTS

2.01 MANUFACTURERS

A. Alpha Wire Corporation

B. Belden Division, Cooper Industries, Inc.

C. Cablec Continental Cables Company

D. General Cable Company

E. Manhattan Electric Cable Corporation

F. Okonite Company

2.02 MATERIALS AND EQUIPMENT

A. Design. Provide cable with the following design characteristics. The cable shall consist of multiple conductors. The cable assembly shall be UL listed, flame, oil and sunlight resistant, and certified for continuous operation in wet or dry locations while installed in underground duct, conduit, or cable tray. The number and size of conductors supplied in each cable shall correspond to requirements of this project. Each conductor shall be individually insulated. Pairs and triads shall have conductors which are twisted together with a drain wire, shielded, and covered with a jacket. Multi-pair/triad cables shall consist of the required number of electrically isolated, shielded pairs or triads, which are bundled together and covered by an overall jacket.

B. Conductors. Provide conductors which are Class B, concentric stranded, annealed tinned copper.

C. Insulation. Each conductor shall have 600-volt insulation.

D. Drain Wire. Provide drain wire which is Class B, seven-strand, tin-coated copper. The drain wire shall not be less than two AWG sizes smaller than the insulated conductor's size, except for multiple pair/triad drain wires, which shall not be less than the insulated conductor size.

E. Shielding. Provide shielding consisting of laminated, nonburning, mylar-backed aluminum tape applied helically around a twisted pair or triad with the aluminum side in continuous contact with the drain wire. Wrap the tape around each twisted pair or triad with a 25 percent minimum.

F. Jacket. The jacket shall be PVC.

G. Armor. Where indicated on Project Drawings, install instrumentation cables protected by an interlocked metal tape armor coating made of galvanized steel.

H. Conductor Identification. Use individual conductors in single-pair and single-triad cables which are color coded black and white; and black, white and red, respectively. Multi-pair triad cables shall have one conductor in each pair or triad colored white, and all other conductors are color coded in sequence according to Table L-2 of Appendix 2 of ICEA S 66-524.

I. Cable Marking. Print cable marking information on the jacket of each cable at 2-foot intervals. Use a permanent printing method with color sharply contrasting the jacket color.

PART 3: EXECUTION

3.01 PREPARATION

A. Complete cable raceway systems, underground duct banks and cable support systems before installing cables.

B. Verify sizing of raceways and pullboxes to ensure proper accommodation for the cables.

C. Check the length of the cable raceway system against the length of cable on the selected reel.

D. Do not install or work on PVC insulated or jacketed cables in temperatures below 32 degrees F.

E. Clean conduits of foreign matter before cables are pulled.

F. Provide at least 30 percent spare conductors or pairs.

3.02 INSTALLATION

A. Cable in Conduit and Ductbank

1. Install cables in accordance with the manufacturer's instructions and NEC Article 725 - Class 1, Class 2, and Class 3 Remote Control, Signaling and Power Limited Circuits. Do not exceed maximum wire tension, maximum insulation pressure and minimum bending radius.

2. Pull cables into conduits using Polywater J pulling compound.

B. Cable in Tray. (NOT USED)

C. Termination

1. Do not splice conductors. For termination use crimp-on type ring tongue non-insulated tin plated copper lugs.

2. For shielded control cable, terminate the shield and ground it at one end only, preferably at the control panel end for instrument and communication cable and at the supply end for electronic power cables.

3. If splicing is required, maintain shield continuity by jumpering the ground shield across connection point where it is broken at junction boxes, or other splice points. Insulate these points from ground.

4. Mark wiring on both ends with circuit numbers or loop tag numbers. Heat shrink wire markers after the ring tongue terminal has been installed. Extend the marker over the crimp or base of the terminal.

D. Tests

1. Before connecting the cables, test insulation integrity and conductor continuity.

2. Use a 500 VDC megohmmeter and perform the cable insulation test in accordance with the operating instructions.

E. Termination. After the 600-volt instrumentation cable has been tested with satisfactory results, the cable can be terminated at both ends to their designated terminal points.

END OF SECTION

Section 16131

DEVICE, PULL AND JUNCTION BOXES

PART 1: GENERAL

1.01 SECTION INCLUDES

A. Specifications for device, pull, and junction boxes.

1.02 MEASUREMENT AND PAYMENT

A. No separate payment will be made under this section. Include the cost for this work in the lump sum base bid.

1.03 REFERENCES

A. American National Standards Institute/National Electrical Manufacturers Association (ANSI/NEMA).

1. FB1 - Fittings and Support for Conduits and Cable Assemblies

2. 250 - Enclosures for Electrical Equipment (1000 volts maximum)

B. American National Standards Institute/National Fire Protection Association (ANSI/NFPA), NFPA70 - National Electrical Code (NEC) - Article 314 - Outlet Device, Pull and Junction Boxes, Conduit Bodies and Fittings.

C. Underwriters Laboratories (UL):

1. 50 - Safety Cabinets and Boxes

2. 508 - Safety Industrial Control Equipment

3. 514B - Safety Fittings for Conduit and Outlet Boxes

4. 886 - Safety Outlet Boxes and Fittings for Use in Hazardous Areas

1.04 SUBMITTALS

A. Submit the following under provisions of Section 01330 – Submittal Procedures:

1. Manufacturer's cut sheets, catalog data

2. Instruction for handling and storage
3. Installation instructions
4. Dimensions and weights

1.05 DELIVERY, STORAGE AND HANDLING

A. Pack and crate boxes to permit ease of handling and to provide protection from damage during shipping, handling and storage.

PART 2: PRODUCTS

2.01 ACCEPTABLE MANUFACTURERS

A. Pull and Junction Boxes

1. Hoffman Industrial Products
2. Pauluhn Electric Manufacturing Company
3. Hennessy
4. Tanco
5. Tejas
6. Circle A.W.

B. Cast Device Boxes

1. Appleton Electric Company
2. Crouse-Hinds, Division of Cooper Industries
3. Killark Electric Manufacturing Company

2.02 MATERIALS AND EQUIPMENT

A. Pull and Junction Boxes

1. Provide UL-approved pull boxes and junction boxes manufactured from Type 316 stainless steel sheet metal and meeting requirements of NEMA 4X for corrosive and wet area, NEMA 250 and NEC Article 314.

2. Provide boxes with a Type 316 stainless steel continuous hinge, closure hasps and all Type 316 stainless steel hardware. Pull and junction boxes shall be mounted so the door opens to the right or to the left.
3. Furnish the door with neoprene gasket and provisions for padlock.

B. Device Boxes

1. Provide UL-approved boxes designed and manufactured to house electrical devices like receptacles and switches, and in conformance with NEMA FB1 and NEC Article 314.

2. Supply boxes that are cast aluminum suitable for a corrosive and wet atmosphere.

C. Hardware

1. Mounting Hardware: Type 316 stainless steel

2. Conduit Connectors: Watertight as manufactured by Myers Scru-tite Hubs, or equal.

PART 3: EXECUTION

3.01 PREPARATION

A. Review the drawings and determine how many boxes of each kind are required. The Contract Drawings do not indicate all boxes that are required. Only boxes at critical locations are indicated. The Contractor is responsible for determining the total number of boxes required. Specification 16111 limits the total degrees of bends in any one conduit run to 270 degrees. Install boxes so as not to exceed the 270 degree limitation.

3.02 INSTALLATION

A. Boxes described in this specification shall be used both in dry and wet, corrosive areas, both inside and outside locations.

B. Install boxes in accordance with NEC Article 314 in locations indicated on the Drawings. Junction boxes shall be mounted so the door opens to the right or to the left.

C. Install junction and pull boxes in readily accessible places to facilitate wire pulls, maintenance and repair. Junction boxes shall be sized for the number and size of conduits that enter the junction box.

D. Plug unused conduit openings.

E. Make conduit connections to sheet metal boxes with watertight conduit connectors.

F. Label boxes with phenolic nameplates as required in Section 16195.

END OF SECTION

Section 16140

WIRING DEVICES

PART 1: GENERAL

1.01 SECTION INCLUDES

A. Specifications for wiring devices including:

1. Receptacles.

2. Wall switches.

3. Wall plates and cover plates.

1.02 MEASUREMENT AND PAYMENT

A. No separate payment will be made under this section. Include the cost for this work in the lump sum base bid.

1.03 REFERENCES

A. American National Standards Institute/National Electrical Manufacturers Association (ANSI/NEMA):

1. NEMA WD1 - General Purpose Wiring Devices.

2. NEMA WD6 - Dimensional Requirements.

B. Federal Specifications (WC-596F).

C. American National Standards Institute/National Fire Protection Association (NFPA):

1. NFPA No. 70 - National Electrical Code (NEC), Articles 210 Branch Circuits, 250 Grounding and 410, Paragraphs 56, 57 and 58.

1.04 SUBMITTALS

A. Submit the following under provisions of Section 01330 – Submittal Procedures:

1. Product Data: Manufacturer's product literature and specifications including dimensions, weights, certifications and instructions for handling, storage and installation.

1.05 DELIVERY, STORAGE AND HANDLING

A. Pack and crate devices to permit ease of handling and protect from damage during shipping, handling and storage.

PART 2: PRODUCTS

2.01 ACCEPTABLE MANUFACTURERS

A. Hubbel Inc. Wiring Devices Division

B. Pass & Seymour/Legrand.

2.02 MATERIALS AND EQUIPMENT

A. Standards: Conform to NEMA WD1 for general requirements and NEMA WD6 for dimensional requirements.

B. Manufacture devices to heavy-duty industrial specification grade with brown nylon bodies (orange for isolated-ground receptacles) back and side wiring provisions and green-colored grounding screws.

C. Receptacles:

1. Duplex-type receptacles: Rated 20 amps at 120 volts.

2. Contacts: Brass or phosphor bronze.

3. Receptacle grounding system: Extend to the mounting strap unless isolated ground is indicated or required.

4. GFI or GFCI (ground fault circuit interrupter) receptacles: Provide feed-through type with test and reset button.

D. Wall Switches:

1. Toggle switches: Rated 20 amps at 120/277 volts AC rated for both resistive and inductive loads.

2. Contacts: Silver cadmium oxide construction to prevent sticking, welding and excessive pitting.

E. Cover Plates:

1. In outdoor, corrosive and wet areas, provide cover plates of heavy duty plastic, gasketed with hinged covers that remain waterproof while still in use and stainless steel hardware.

2. All other plates: Type 302 stainless steel.

PART 3: EXECUTION

3.01 PREPARATION

A. Verify that device boxes are correctly placed.

B. Verify that the correct quantity, size and type of wires are pulled to each device box.

C. Verify that wiring has been checked at both ends.

D. Prepare wire ends for connection to devices.

E. Inspect each wiring device for defects.

3.02 INSTALLATION

A. Install products in accordance with manufacturer's instructions.

B. Install devices plumb and level.

C. Install switches with OFF position down, and the centerline of the switch at 48" above the floor.

D. Install receptacles with grounding pole on top, and the centerline of the receptacle at 18" above the floor.

E. Connect wiring device grounding terminal to outlet box with bonding jumper.

F. Connect wiring devices by wrapping conductors clockwise around screw terminals.

G. Install cover plates on switch, receptacle and blank outlets in finished areas.

H. Energize and test devices for proper operation.

END OF SECTION

Section 16161

PANELBOARDS

PART 1: GENERAL

1.01 SECTION INCLUDES

A. Specifications for panelboards.

1.02 MEASUREMENT AND PAYMENT

A. No separate payment will be made under this section. Include the cost for this work in the lump sum base bid.

1.03 REFERENCES

A. American National Standards Institute/National Electrical Manufacturers Association (ANSI/NEMA)

1. NEMA AB1: Molded Case Circuit Breakers

2. NEMA PB1: Panelboards

3. NEMA PB1.1: Instruction for Safe Installation Operation and Maintenance of Panelboards rated 600 volts or less.

4. NEMA PB1.2: Application Guide for Ground-fault Protective Devices for Equipment

B. Federal Specifications, FS W-C-375A: Circuit Breakers, Molded Case, Branch Circuit and Service.

C. American National Standards Institute/National Fire Protection Association (ANSI/NFPA), NFPA No. 70 - National Electrical Code (NEC), Article 408 - Switchboards and Panelboards.

1.04 SUBMITTALS

A. Submit the following under provisions of Section 01330 – Submittal Procedures:

1. Manufacturer's cut sheets and catalog data

2. Breaker arrangement

3. Breaker characteristic curves

4. Instruction for handling and storage

5. Installation instructions

6. Dimensions and weights

1.05 DELIVERY, STORAGE AND HANDLING

A. Have panelboards packed and crated to permit ease of handling and to provide protection from damage during shipping, handling and storage.

PART 2: PRODUCTS

2.01 ACCEPTABLE MANUFACTURERS

A. Eaton.

B. Square D Company

2.02 MATERIALS AND EQUIPMENT

A. Basic Requirements

1. Use panelboards manufactured and tested in accordance with NEMA PB 1.

2. Provide circuit breakers of industrial grade, manufactured and tested in accordance with NEMA AB 1 and Federal Specification FS W-C-375.

3. Do not exceed 42 available single pole branch circuits in any one panelboard.

4. Perform a load analysis to assure the panel rating is not overloaded when new loads are added to existing panels.

B. Rating

1. Voltage rating, current rating, number of phases, number of wires and number of poles are indicated on Drawings.

2. Branch circuit breaker interrupting capacity shall be minimum 10,000 ampere RMS symmetrical for 120V and 208V; 35,000 ampere RMS symmetrical for 480V.

C. Circuit Breakers: Molded case, bolt-on thermal magnetic type with number of poles and trip ratings as shown on the Drawings. Provide ground fault interrupters with trip rating where shown on the Drawings.

D. Bus System

1. Bus Bars: 98 percent conductivity copper. Provide a solid neutral bar in 4-wire panelboards. Include ground bus in all panels. Provide split-bus panels where shown on Drawings.

2. Main: Circuit breaker or main lugs only as indicated on the Drawings or as required to meet the current interrupting ratings.

E. Box and Trim

1. Construction: Door-in-door construction with Code grade steel, ample gutter space, flush door, flush snaplatch and lock.

2. Trim: Surface or flush as required. Enclose panelboards located outdoors, or in other wet and corrosive areas in NEMA 4X Type 316 stainless steel enclosures. Enclose indoor panelboards installed in air conditioned areas in a NEMA 1 enclosure with manufacturer's standard gray enamel finish.

3. Directory: Typed card, with glass cover in frame on back of door giving the circuit numbers and the area or equipment served.

F. Conduit Connectors: Watertight as manufactured by Myers Scru-tite Hubs, or equal.

PART 3: EXECUTION

3.01 PREPARATION

A. Review Drawings to verify that panelboards are correct for the application.

3.02 INSTALLATION

A. Install the panelboard in accordance with NEMA PB 1.1 and NEC Article 408.

B. Where possible, mount panelboards 6'-0" (to top of cabinet) above finished floor or grade. In wet and corrosive areas, including outdoor locations, install panel enclosures on spacers to provide approximately 1/4-inch between back of cabinet and mounting surface. Mounting hardware shall be Type 316 stainless steel.

C. In wet and corrosive areas, including outdoor locations, connect conduit to the bottom of enclosure and to the lower 30 percent of the sides using watertight connectors.

END OF SECTION

Section 16170

GROUNDING AND BONDING

PART 1: GENERAL

1.01 SECTION INCLUDES

A. Grounding electrodes and conductors

B. Equipment grounding conductors

C. Bonding

D. Power system grounding

E. Communication system grounding

F. Electrical equipment and raceway grounding and bonding

G. Control equipment grounding

1.02 MEASUREMENT AND PAYMENT

A. No separate payment will be made under this section. Include the cost for this work in the lump sum base bid.

1.03 REFERENCES

A. American Society for Testing and Materials (ASTM)

1. ASTM B3: Soft or Annealed Copper Wires

2. ASTM B8: Concentric-Lay-Stranded Copper Conductors, Hard, Medium Hard, Soft

3. ASTM B33: Tinned Soft or Annealed Copper Wire for Electrical Purposes

B. Institute of Electrical and Electronics Engineers (IEEE)

1. IEEE 142-82: Recommended Practice for Grounding of Industrial and Commercial Power Systems

2. IEEE 383-2.5: IEEE Standard for Type Test of Class IE Electric Cables, Field Splices, and Connections for Nuclear Power Generating Stations.

C. Underwriters' Laboratories (UL)

1. UL 83: Thermoplastic Insulated Wire and Cables

2. UL 467: Grounding and Bonding Equipment

D. National Fire Protection Association (NFPA), NFPA No. 70 - National Electrical Code (NEC), Article No. 250 - Grounding.

1.04 SUBMITTALS

A. Submit the following under the provisions of Section 01330 – Submittal Procedures:

1. Manufacturer's cut sheets and catalog data

2. Installation, terminating and splicing procedure

3. Instruction for handling and storage

4. Dimensions and weight

1.05 QUALITY ASSURANCE

A. Tests

1. Use insulated cable conforming to requirements of the vertical tray flame test as described in IEEE 383-2.5.

2. Test grounding system in the field in accordance with procedures outlined in Part 3 - Execution.

1.06 DELIVERY, STORAGE AND HANDLING

A. Ship grounding cable on manufacturer's standard reel sizes unless otherwise specified. Where cut lengths are specified, mark reel footage accordingly. Each reel shall contain one continuous length of cable. Provide impact protection by wood lagging or suitable barrier across the traverse of the reel. Pack and crate other materials specified to withstand normal abuse during shipping, handling and storage.

PART 2: PRODUCTS

2.01 ACCEPTABLE MANUFACTURERS

A. Cable

1. American Insulated Wire Company
2. Cablec Continental Cables Company
3. General Cable Company
4. Okonite Company
5. Pirelli Cable Corporation
6. Rome Cable Corporation
7. Triangle Wire and Cable, Inc.

B. Ground Rods and Connectors:

1. Blackburn
2. Copperweld
3. Thomas & Betts

C. Exothermic Connections:

1. Burndy Corporation (Therm-O-Weld)
2. Erico Products (Cadweld)

D. Grounding Connectors:

1. Burndy Corporation
2. O.Z. Gedney
3. Thomas & Betts

2.02 MATERIALS AND EQUIPMENT

A. Design. Provide grounding cable and materials with the following characteristics:

1. Use a grounding system designed in accordance with NEC Article No. 250 Grounding, and the IEEE 142-82 - Recommended Practice for Grounding of Industrial and Commercial Power Systems.

B. Materials

1. Use grounding conductors, bare or insulated, which are manufactured and tested in accordance with applicable standards ASTM B3, ASTM B8 and ASTM B33.

2. Where indicated on Project Drawings, provide grounding conductors of No. 4/0 AWG, Class C stranded, bare copper cable. :

3. Where single conductor insulated grounding conductors are called for, use 600 volt insulation. Use ground conductors identified with green insulation or green tape marking.

4. Supply identifying ribbon which is PVC tape, 3 inches wide, red color, permanently imprinted with "CAUTION BURIED ELECTRIC LINE BELOW" in black letters as specified in Section 16195, Electrical Identification.

PART 3: EXECUTION

3.01 PREPARATION

A. Complete site preparation and soil compaction before trenching for grounding connectors and driving ground rods.

B. Verify from Drawings the exact location of stub-up points for grounding of equipment.

3.02 CONSTRUCTION CRITERIA

A. The main grounding conductors shall be installed at a depth of at least 30 inches below earth surface. Connect the grounding conductors to ground rods and to tap connections to form a grounding system as indicated on the electrical Drawings. The Contractor shall give special attention to the grounding of service equipment and shall comply with the NEC, local authorities and the serving utility company.

B. Electrical equipment, buildings, and other equipment shall be grounded as indicated on the Drawings. Where ground rods are required, the rods shall be 20 feet long, 3/4 inch diameter, copper-clad steel ground rods. Rods shall be driven vertically, and the top of the rods shall be a minimum of 12 inches below finished grade, or as specified on the Drawings. Ground test wells shall be provided where indicated in the Drawings.

C. Local pushbutton and selector switch stations, two-wire control devices, disconnect switches, lighting transformers, panelboards, operator panels, benchboards, and the enclosures of other electrical apparatus shall be grounded through an equipment grounding conductor run with the power supply or control circuit conductors or shall be grounded as shown on the Drawings.

D. Ground medium voltage motors, in addition to the grounding conductors in the motor feeder cable, with a separate No. 4/0 AWG cable to motor frame.

E. Motors having power supplied by multiconductor cable shall be grounded by a separate grounding conductor in the cable and where supplied by single conductor cable in conduit by a grounding conductor pulled in the conduit. Connect ground conductors to the ground bus in the motor control center and to the ground terminal provided in the motor conduit box.

F. Do not ground the insulated bearing pedestals of large motors.

G. Connect ladder-type cable trays to the grounding electrode system.

H. Install a warning ribbon approximately 12 inches below finished grade directly above the main grounding conductors.

3.03 INSTALLATION

A. Equipment Grounding

1. Make grounding connections to surfaces which are dry and cleaned of paint, rust, oxides, scales, grease and dirt to ensure good conductivity. Clean copper and galvanized steel to remove oxide before making welds or connections.

2. Use the exothermic welding process for below-grade grounding connections, except at ground rods. Use mechanical connectors or thermal connections for above-grade grounding connections as shown on the Drawings.

3. Make grounding connections to electrical equipment, vessels, mechanical equipment and ground rods in accordance with the Drawings.

4. Ground tanks and vessels by making connections to integral structural supports or to existing grounding lugs or pads, and not to the body of the tank or vessel.

5. Leave ground connections to equipment visible for inspection. Protect them with PVC non-metallic conduit as indicated on the Drawings.

6. Make connections to motor frames and ground buses with lugs attached to the equipment by means of bolts. Do not use motor anchor bolts or equipment housing for fastening lugs of grounding cable.

7. Where the wiring for lighting systems consists of single conductor cables in conduit, provide each conduit with an equipment grounding conductor. Use a grounding conductor with green colored insulation and ground equipment in the lighting system.

B. Raceway and Support Systems Grounding

1. Install raceway, cable rack or tray and conduit so that it is bonded together and permanently grounded to the equipment ground bus, according to the Drawings. Connection to conduit may be grounding bushing or ground clamp.

2. Install raceway at low voltage motor control centers or other low voltage control equipment so that it is bonded and grounded, except that any conduit which is effectively grounded to the sheet metal enclosure by bonding bushing or hubs need not be otherwise bonded.

3. Where a grounding conductor is run in or on a cable tray, bond the grounding conductor to each section of cable tray with a cable tray ground clamp.

4. Where only a grounding conductor is installed in a metal conduit, bond both ends of the conduit to the grounding conductor.

5. Provide flexible "jumpers" around raceway expansion joints. Use copper bonding straps for steel conduit. Install jumpers across cable tray joints which have been parted to allow for expansion and any hinged cable tray connections.

C. Fences and Gates. Ground fences, fence posts and gates to the underground grounding conductor system only when shown on the Drawings.

D. Power System Grounding

1. Solidly ground the secondary neutral of the main power supply transformer either to the grounding system or through an impedance. See Drawings for details.

2. Solidly ground the neutral of lighting, instrument and control transformers.

E. Cable Armor and Shields

1. For shielded control cable, terminate and ground the shield at one end only, preferably at the control panel end for instrument and communication cable and at the supply end for electronic power cables. Maintain shield continuity by jumpering the ground shield across connection point where it is broken at junction boxes, or other splice points. Insulate these points from ground.

2. Connect the ground wire in power cable assemblies at each terminal point to a ground bus, if available, or to the equipment enclosure. Do not carry these ground wires through a "doughnut" current transformer (CT) used for ground fault relaying; do carry ground leads from stress cones through CTs. Ground power cable armor and shield at each terminal point.

F. Test Wells

1. Provide access (test wells) for testing the ground grid system at one or several ground rod locations as indicated on the Drawings. Make test wells of a pipe surrounding the rod and connections with a cover placed on top at grade level. See Drawings for details.

2. Install a test well at the service entrance pole to serve as the service entrance grounding electrode.

G. Test

1. Perform ground resistance tests after underground grounding system installation and connections are complete.

2. Make tests at each ground test well using a "fall of potential" test method. Each ground test well shall not exceed a maximum resistance of 5 ohms. Where measured values exceed this figure, install additional ground rods as required to reduce the resistance to the specified limit.

H. Inspection. Inspection of the grounding system by the Project Manager and the local Code Inspector must take place before trenches with grounding system cables are backfilled.

END OF SECTION

Section 16171

LOW VOLTAGE MOTORS

PART 1: GENERAL

1.01 SECTION INCLUDES

A. Specification for low voltage motors.

1.02 MEASUREMENT AND PAYMENT

A. No separate payment will be provided for work performed under this Section. Include the cost for this work in the lump sum base bid.

B. Refer to Section 01270 – Measurement and Payment.

1.03 RELATED WORK

A. Section 16195 – Electrical Identification.

B. Section 01330 – Submittal Procedures.

C. Section 01340 – Shop Drawings, Product Data, and Samples.

D. Section 01782 – Operations and Maintenance Data.

E. Section 11133 – Horizontal Split Case Centrifugal Pumps.

1.04 REFERENCES

A. American National Standards Institute/Anti-Friction Bearing Manufacturers Association (ANSI/AFBMA): Load Ratings and Fatigue Life for Ball Bearings.

B. American National Standards Institute/national Electrical Manufacturers Association (ANSI/NEMA): MG 1 - Motors and Generators.

C. American National Standards Institute/National Fire Protection Association (ANSI/NFPA): NFPA 70 - National Electrical Code (NEC).

D. American National Standards Institute/Institute of Electrical and Electronics Engineers (ANSI/IEEE)

1. IEEE112 – Standard Test Procedure for Polyphase Induction Motors and Generators

2. IEEE114 – Standard Test Procedure for Single-Phase Induction Motors

E. American National Standards Institute/Underwriters Laboratories, Inc. (ANSI/UL)

1. UL547 – Thermal Protectors for Motors

2. UL674 – Electric Motors and Generators for Use in Hazardous Locations, Class I Groups C and D, Class II Groups E, F and G

F. Institute of Electrical and Electronics Engineers (IEEE)

1. 85 – Test Procedure for Airborne Sound Measurements on Rotating Electric Machinery

2. 43 – Recommended Practice for Testing Insulation Resistance of Rotating Machinery

1.05 SUBMITTALS

A. Submit the following under the provisions of Section 01330 – Submittals:

1. Outline drawings

2. Completed motor data sheets

3. Assembly drawings

4. Anchor bolt location drawings

5. Electrical schematics and wiring diagrams

6. Equipment performance curves and data

7. Bill of installation/assembly materials

8. Equipment weights

9. Catalog data

10. Assembly/disassembly sizes and weights

11. Operating instructions

12. Maintenance and lubrication recommendations

13. Recommended spare parts for startup including prices

14. Special maintenance tool requirements

15. Recommended spare parts list for one year operation

16. Quality control procedures

17. Nondestructive test procedures

18. Acceptance test procedure

19. Surface preparation and painting procedure

20. Shipping, handling, and storage procedures

21. Installation/erection procedure

22. Code compliance certificate

23. Electrical equipment heat run test records

24. Nameplate data

25. Performance/acceptance test report

26. Size of the largest three phase power factor correction capacitor unit which can be connected to three phase motors.

1.06 QUALITY ASSURANCE

A. Tests

1. Inspect and test motors in accordance with specified NEMA standards. Test polyphase motors to the requirements of ANSI/IEEE 112. Test single phase motors to the requirements of ANSI/IEEE 114.

1.07 DELIVERY, STORAGE AND HANDLING

A. Prepare each unit for the type and mode of shipment specified. The preparation shall be suitable for at least six months of outdoor storage from time of shipment requiring no disassembly prior to operation (except for bearing and seal inspections).

B. Provide instructions as necessary to preserve the integrity of the storage preparation after the equipment arrives at the jobsite.

C. Coat exterior machined surfaces with a suitable rust preventative.

D. After drained and cleaned, coat internal areas of bearings and auxiliary equipment in oil lubrication systems fabricated from carbon steel with a suitable oil-soluble rust preventative.

E. Provide threaded openings with steel caps or solid-shank steel plugs. Do not use nonmetallic plugs or caps.

F. When sleeve bearings are furnished, block the rotor to prevent axial and radial movement.

G. When space heaters are furnished, make heater leads accessible without disturbing the shipping package. Tag the leads for identification.

PART 2: PRODUCTS

2.01 MANUFACTURERS

A. General Electric.

B. Reliance Electric.

C. TECO-Westinghouse Motor Company

D. Toshiba.

E. U.S. Motors.

2.02 DESIGN

A. This specification defines the minimum requirements for low-voltage, random-wound, squirrel-cage, induction motors in the NEMA frame sizes for nonclassified electrical area service.

B. Use this specification for the selection and purchase of induction motors purchased separately or furnished with driven equipment as a package.

C. This specification, along with the reference documents make up the requirements for motors up to and including 500 hp. Use driven equipment specifications to supplement this specification and identify special project requirements.

D. Motors purchased with this specification will drive vertical pumps. Motors will be installed in a plant environment that may include high humidity, storms, salt-laden air, insects, plant life, fungus, rodents as well as traces of petroleum and/or chemicals.

E. Motors shall perform satisfactorily for the application and installation conditions.

F. Make motors suitable for operation in an outdoor corrosive and wet environment.

G. When motors are furnished with the driven equipment as a package, motors shall also meet the requirements of the driven equipment specification.

H. Design motors for operation at a temperature of up to 40 degrees C/104 degrees F ambient and at an elevation of up to 1000 m/3300 ft above sea level.

2.03 PERFORMANCE REQUIREMENTS

A. Confirm motors have ample capacity to supply the maximum output demanded by the driven equipment and have a speed-torque-current characteristic appropriate to the driven equipment. Where new motors are provided for existing pumps, match new motor characteristics to pumps.

B. Confirm motors ability to overcome starting load inertia and accelerate the load to rated speed within 15 seconds at 80 percent of rated nameplate voltage, without exceeding the motor time-temperature damage curve.

C. Design and construct motors for continuous full load duty. Motors may also operate intermittently.

D. Three-phase induction motors shall be ANSI/NEMA MG 1 Design B. Motors driving high-torque loads may be NEMA Design C or D, providing so stated in the proposal.

E. Single-phase fractional horsepower motors shall be NEMA Design N.

F. Single speed, polyphase motors shall have efficiencies which equal or exceed those in ANSI/NEMA MG-1 (latest edition) for "NEMA Premium Efficiency" motors. Motor nameplate shall indicate that motor is a "NEMA Premium Efficiency" motor.

2.04 ENCLOSURES AND FRAMES

A. Motors shall be provided with NEMA Type TEFC enclosures.

B. Motors frames, enclosures, terminal boxes, fan cover guards and air passages shall be cast iron or heavy fabricated steel of such design or proportions as to hold all motor components rigidly in proper position, and shall meet all NEMA requirements for the type of enclosure employed. End bells shall be cast iron. Steel sheet or plate used shall have a thickness of at least 1/8 in. Fans, breathers, drains, screens, covers and hardware shall be corrosion-resistant materials. Fractional horsepower motors may have rolled steel stator frame and cast iron brackets with integral mounting feet.

C. Make motor enclosure fans low inertia, nonsparking type, and suitable for bidirectional rotation and mount on hub with stainless steel bolts.

D. Furnish each enclosure with a stainless steel automatic breather/drain located at the low point of the enclosure.

E. Motor frame and enclosure shall have provisions for grounding to the main grounding system. Drill and tap rear foot on horizontal motors and the flange base on vertical motors on the junction box side for a service post ground connector.

F. Provide motors weighing more than 300 lbs. with lifting eyebolts, rings or lugs capable of supporting the weight of the motor.

2.05 ELECTRICAL REQUIREMENTS

A. Motors shall be rated as follows:

1. 460 volts, three phase, 60 Hz. where the source voltage is 480 volts.

2. 230 volts, three phase, 60 Hz. where the source voltage is 240 volts.

B. Induction motors shall be random-wound, squirrel-cage rated for continuous duty and suitable for across-the-line starting, at rated voltage.

C. Determine motor speed, torque and special operating requirements from the requirements of the driven equipment.

D. Use copper for motor windings and terminal leads. Aluminum is not an allowable material for any portion of the motor other than die-cast rotor (fabricated aluminum rotors are not acceptable). Copper rotors shall not be fabricated using brazing maler and any copper alloy must contain less than two percent phosphorous.

E. Three-phase single speed AC motors shall be provided with three leads.

F. Motors shall have a 1.15 service factor (SF) rating unless specified otherwise.

G. Motor insulation shall be a minimum of Class F epoxy nonhygroscopic material with temperature rise limited to Class B design rise of 90 degrees C by resistance method at 1.15 SF. Inverter Duty Motors shall have the highest voltage rated insulation system available for application on the output of ASDs (Adjustable SpeedDrives). As a minimum, inverter duty motors shall use Phelps–Dodge type QS magnet wire which is pulse resistant, in combination with the motor manufacturer's insulation system.

H. Motors shall operate successfully under running conditions at rated load with variation in voltage and frequency up to the limits set by ANSI/NEMA MG 1-12.44.

I. Unless specified otherwise, motors shall be suitable for the number of full-voltage starts as required by ANSI/NEMA MG 1-12.50 as a minimum.

J. Locked rotor current shall not exceed 5.5 times full load current.

K. Motors operated on VFDs or ASDs shall be rated as inverter duty.

2.06 TERMINAL BOXES

A. Make motor terminal boxes weatherproof and with threaded conduit entrances with water-resistant seals between boxes and motor frame. Design the line-terminal box to allow box to be rotated in four 90 degree steps for bottom, side or top entry of conduit or cable. The line terminal box shall match the location indicated on project drawings. Locate a separate terminal box for space heaters adjacent to the line terminal box. Provide a separate terminal box for RTD's.

B. Size the line terminal box so that feeder cables can be connected to motor leads for terminals without damage to the cable or the leads. Oversize the terminal box to exceed the minimum volumes shown in the NEC Section 430-12 by 100% and provide adequate space to mount and enclose all devices mounted within.

C. Furnish the line terminal box with suitable compression ring-type, permanently numbered, cable connectors for incoming bolted-cable connections and one clamp-type ground terminal lug of sufficient size to contain a conductor the same size as motor leads.

D. Wire accessory leads to a terminal board in a terminal box or boxes separate from the line leads. Supply separate terminal boxes for the leads for space heaters, and temperature detectors, current transformers, and other similar accessories, when supplied.

2.07 ELECTRICAL ACCESSORIES

A. For motors 25 Hp and larger, provide space heaters for optimum uniform heating of the stator winding and prevent condensation in the motor at ambient temperature when motor is not in operation. Space heaters shall be rated 240 V but shall be connected for operation at 115V. Space heaters shall have maximum sheath temperature of 150 degrees C and shall be approved for the specified hazardous area classification, if so classified.

B. Provide motors 200 horsepower and larger with a minimum of six, three-wire, 100 ohm, platinum RTDs, two per phase, spaced equally around the circumference of the stator. Provide a drawing which shows the location of RTDs in the motor stator.

C. Provide motors 200 horsepower and larger with three-wire, 100 ohm, platinum RTDs, one per bearing.

2.08 BEARINGS AND LUBRICATION

A. Provide oil-lubricated sleeve bearings with a ring oil lubrication system for motors 200 Hp and larger. Provide grease lubricated bearings for motors less than 200 Hp.

B. Motors shall have proper bearing insulation to prevent circulation of shaft currents and resulting damage. Provide also insulating means for any oil-supply connections and monitoring equipment to prevent electrical bypassing of the bearing insulation.

C. Unless specified otherwise, oil lubricated bearings shall have a life of at least 100,000 hours. Grease lubricated bearings shall have a rated life of at least 100,000 hours.

D. Provide oil-lubricated bearing housings and a reservoir of sufficient depth, to serve as a settling chamber for foreign materials, with a drain plug, and vents as required, accessible from the exterior of the motor. Furnish oil-lubricated motors with a constant oil-level sight gauge mounted on the motor housing and marked with running- and stopped-oil levels.

E. Provide motors with suitable seals to prevent moisture from entering through the shaft openings. Provide an Inpro/Seal isolator (labyrinth seal) on the shaft end of the motor.

F. For in-line pumps, special high thrust bearings are required for drive motors, except for pumps where the thrust bearings are provided as an integral part of the pump.

2.09 ADDITIONAL REQUIREMENTS FOR VERTICAL MOTORS

A. Solid shaft vertical motors are acceptable for all applications except when the connection to the driven equipment consists of sectional driven shaft which may unscrew and lengthen in the event of reversal of direction.

B. Design vertical motor thrust bearings conservatively to carry maximum axial thrusts (up and down) imposed by driven equipment.

C. Vertical motors shall have oil-lubricated, top and bottom bearings.

D. Vertical motor bases (Stands) shall be NEMA Type P.

E. Provide vertical motors with a positive, nonreversing, corrosion-resistant ("anti-ratchet") mechanism.

F. Where new motors are being provided for existing pumps, motor mounting must match the existing pump, and new shaft couplings shall be provided to couple the pump to the new motor.

2.10 SOLE PLATE

A. See pump vendor for requirements.

2.11 ROTOR BALANCING AND VIBRATION

A. Balance motor rotors dynamically according to NEMA standards. Depositing weld metal, solder and the like on the rotor to effect a balance will not be acceptable. Remove parent metal to achieve balance without affecting the structural strength of the rotor. Chiseling or sawing parent metal is prohibited.

B. Measure vibration in all directions with the motor running uncoupled at no load, normal voltage and frequency, and at each speed of the operating range. Motor vibration shall not exceed the total amplitude, peak-to-peak values given in ANSI/NEMA MG 1-Part 7 as measured in accordance with ANSI/NEMA MG 1-Part 7. Perform a second test and measure vibration in all directions with the motor running coupled to the load with normal load, normal voltage, normal frequency, and typical speeds of the operating range. Vibration testing shall be performed by an experienced third party company not associated with the contractor, subcontractors, pump or motor vendors.

C. Where indicated on project drawings, provide a Metrix Instrument Co., PMC/Beta Model 440D vibration switch with manual reset switch, normally open dry output contact for alarm and normally closed dry output contact for shutdown. Provide a pre-drilled mounting location for the vibration switch.

2.12 NAMEPLATES

A. Fasten motor stainless steel nameplates securely to the motor with stainless steel screws. Nameplates shall include as a minimum the information required by ANSI/NEMA MG 1.

2.13 FINISH

A. Motors shall be primed and finished using the motor manufacturer's standard epoxy painting system unless specified otherwise.

B. Cover internal surfaces, e.g., shaft, rotor, stator, and other similar components, with a corrosion-resistant coating of epoxy or equal material for increased life.

2.14 NOISE LEVELS

A. Determine motor noise level in accordance with IEEE 85. Levels or noise generated by a motor shall not exceed 85 dbA at a distance of 1 m/3.3 ft unless specified otherwise on the data sheet.

B. Noise level requirements may be also covered by a separate noise requirements specification included with the driven equipment specification.

PART 3: EXECUTION

3.01 PREPARATION

A. Verify motor and motor base match mounting provisions for the driven equipment.

3.02 SETTINGS

A. Where GE Multilin Motor Protection Relays are provided for motor protection, provide all settings for the Multilin Relays.

B. Where PMC/Beta Vibration Switches are required, provide all settings.

3.03 INSTALLATION

A. Install each motor in accordance with the Manufacturer's published instructions using the necessary tools and instrument to ensure proper fit and alignment with the driven machine.

B. Enter settings for GE Multilin Relays where Multilin relays are provided for motor protection.

C. Enter settings for PMC/Beta Vibration Switches.

D. Before coupling up with the driven machine, the following work should be performed.

1. Test the motor winding insulation resistance in accordance with IEEE 43.

2. Terminate cables to the motor leads.

3. Energize motor momentarily to check rotation.

4. Check shaft of driven machine to ensure free movement.

5. Perform motor vibration tests.

E. Couple motor up with driven machine.

1. Perform motor vibration tests.

END OF SECTION

Section 16195

ELECTRICAL IDENTIFICATION

PART 1: GENERAL

1.01 SECTION INCLUDES

A. Specification for electrical identification including:

1. Nameplates and labels
2. Wire and cable markers
3. Conduit markers
4. Cable tray markers
5. Underground warning tape
6. Warning labels

1.02 MEASUREMENT AND PAYMENT

A. No separate payment will be made for work performed under this Section. Include the cost for this work in the lump sum Base Bid.

1.03 REFERENCES

A. American National Standards Institute/National Fire Protection Association (ANSI/NFPA)

1. No. 70 - National Electrical Code (NEC)

a. Article 110 - Requirements for Electrical Installation

b. Article 430 - Transformers and Transformer Vaults

B. City of Houston Building Code

C. Other applicable Codes and Standards as referenced in other Sections.

D. Underwriters Laboratories. U.L. Standards No. 224 - Extruded Insulated Tubing

1.04 SUBMITTALS

A. Submit the following under the provisions of Section 01330 Submittal Procedure:

1. Manufacturer's cut sheets and catalog data
2. Description of materials used
3. Label or nameplate dimensions
4. Engraving or imprint legends
5. Instruction for handling and storage
6. Installation instructions

1.05 DELIVERY, STORAGE AND HANDLING

A. Pack materials to permit ease of handling and to provide protection from damage during shipping, handling and storage.

PART 2: PRODUCTS

2.01 ACCEPTABLE MANUFACTURERS

A. Almetek Industries Incorporated

B. Brady U.S.A. Incorporated

C. Ideal Electric Company

D. Raychem Corporatio

E. 3M Electrical Products Division

F. Thomas & Bett

G. Tyton Corporation

2.02 MATERIALS AND EQUIPMENT

A. Nameplates and Labels

1. Provide an identification tag for each item of electrical and instrumentation equipment showing its item number and service or application. Use the description shown on the electrical Drawings.

2. For nameplates, use 3-ply phenolic material engraved to show black lettering on a white background. Size the nameplates approximately 1 inch wide and 3 inches long for 3 lines of 3/16 inch - 16 letters with a 0.8 condensed factor.

3. Generally, provide large pieces of equipment with engraved nameplates; provide additional nameplates at pushbuttons and other local devices; as detailed. Provide identification for all other electrical and instrumentation equipment, devices, or enclosures, such as MCC's, panelboards, disconnect switches, capacitors, relays, and dedicated receptacles not furnished with readily noticeable tag, nameplates, or other means of identification.

4. Install nameplates on the front cover of transformers stating the transformer service location number or identification number, the panelboard or device served, and main breaker feeding the transformer (MCC No. and compartment), and the drawing number on which the transformer schematic is shown.

5. Furnish equipment, such as motor starters, safety switches, welding receptacles and circuit breakers, with 1" x 3" plastic nameplates stating description of item served.

6. Provide nameplates for motors giving the driven equipment description, the service location number, and the MCC number with compartment number when applicable. Nameplates will normally be mounted adjacent to the motor at the motor pushbutton when one is furnished.

7. Install nameplates on the outside and inside of doors to circuit breaker panelboards (i.e., lighting, instrument or receptacle panels). State the panelboard name, the drawing number on which the panelboard schedule shows, and the main breaker feeding the panel (MCC No. and compartment).

8. Type panelboard directories and insert them inside the panelboard doors.

9. Place a large nameplate no less than 3"x5" on control panels, relay panels, junction boxes, or enclosures with electrical devices mounted inside or on the outside of the enclosure indicating the purpose of the cabinet.

10. Provide a nameplate on MCC motor starter doors duplicating motor nameplate data.

B. Wire and Cable Markers

1. Use pre-printed tubular heat-shrink type wire and cable markers at each end of all conductors (both factory installed conductors and field installed conductors).

2. Select markers manufactured so that the heat-shrink process makes the imprint permanent and solvent-resistant.

3. Use markers that are self-extinguishing, conforming to U.L. Standard No. 224 for print performance, heat shock, and flammability.

4. Provide marker material that is flexible, radiation cross-linked polyolefin with 3 to 1 shrink ratio, rated 600 volts, and white in color.

C. Conduit Markers

1. Provide conduit markers made of stainless steel tags approximately 2 inches x 1 inch x 19 gage. See Specification 16111 for locations where conduit tags (markers) are required to be installed on conduits.

2. Stamp the caption on the tag and have it black filled.

3. Punch tags for tie fasteners. Fasten tags to the conduits with stainless steel braided wire.

D. Cable Tray Markers

1. For high visibility and contrast, use cable tray markers that are yellow with black legend.

2. Use markers made of vinyl impregnated cloth, suitable for exposure to corrosive, wet, and abrasive environment.

3. Make markers of pre-cut individual letters or numbers with pressure sensitive adhesive backing.

4. Size legend characters to 4 inches high on a total marker height of approximately 5 inches, suitable for applying to 6-inch side rails of a cable tray.

E. Underground Warning Tape

1. Provide warning tape made of 4 mil thick polyolefin film, 3 inches wide, suitable for direct burial and resistant to alkalis, acids, and other common soil substances.

2. Use red tape with black legend printed in permanent ink.

F. Warning Labels

1. Place OSHA safety labels on enclosures and boxes 100 cubic inches or more containing electrical equipment or terminations.

2. Provide OSHA color codes for the labels. Use labels made from 4 mil vinyl with pressure sensitive adhesive backing.

3. The warning label caption is DANGER - 480 VOLTS or as indicated on the drawings

4. Size labels either 5 inches x 3-1/2 inches or 10 inches x 7 inches, as indicated on the Drawings.

PART 3: EXECUTION

3.01 PREPARATION

A. Degrease and clean surfaces where adhesive labels will be applied.

B. Drill holes for nameplates to be fastened with stainless screws.

C. Prepare the cable ends for termination and conductor markings.

D. Identify conduits at terminating points and select tags accordingly.

3.02 INSTALLATION

A. Install nameplates and labels in accordance with the manufacturer's instructions and the Drawings.

B. Apply wire and cable markers in accordance with manufacturer's instructions using a heat gun with properly sized nozzle for the application. Tag the wires at both ends with the same notation.

C. Tag conduits at junction boxes, pull boxes, and at other termination points. See Specification 16111 for other locations where conduit tags are required.

D. Identify cable trays at the time of installation with the alphanumeric number shown on the Drawings. Label cable trays on the outside rail. Place the tray identifier at each point where the tray designation changes and at 200 foot intervals in between, but not less than two per run.

E. Identify underground conduits, cables, or duct banks using the underground warning tape. The underground grounding grid, including the laterals. Also use underground warning tape. Install one tape per trench at 12 inches below grade or as indicated on the Drawings. For wide trenches or duct banks, install one warning tape per 24 inch width.

F. Apply the 5 inches by 3 1/2 inches warning labels to disconnect switches, panelboards, terminal boxes, and similar devices in accordance with manufacturer's instruction and the Drawings. Apply the 10 inches x 7 inches warning labels to larger control panel enclosures, motor control centers, and to entrance doors to buildings containing electrical power and control equipment.

END OF SECTION

Section 16220

AUTOMATIC TRANSFER SWITCHES

PART 1: GENERAL

1.01 SCOPE OF WORK

A. Furnish all labor, materials, equipment and incidentals to install automatic transfer switches (ATS) with programmable delayed transition time on transfer to either source. The ATS will be used to connect normal or standby power to the load. Where indicated on the one line diagrams, provide the ATS with bypass and isolation switches. Where indicated on the one line diagrams, provide a MTS (Manual Transfer Switch) similar to an ATS but without automatic features.

1.02 MEASUREMENT AND PAYMENT

A. No separate payment will be made for work performed under this Section.

1.03 RELATED SECTIONS

A. Section 16195 – Electrical Identification

B. Section 16210 – Standby Diesel Engine Generators

1.04 APPLICABLE STANDARDS

A. The combination automatic transfer bypass-isolation switches covered by these specifications shall be designed, tested, and assembled in strict accordance with all applicable standards of ANSI, U.L., IEEE and NEMA.

1.05 SUBMITTALS

A. Submit the following under provisions of Section 01330 – Submittal Procedures:

1. Descriptive literature

2. Plan, elevation, side, and front view arrangement drawings, including overall dimension, weights and clearances, as well as mounting or anchoring requirements and conduit entrance locations.

3. Schematic diagrams.

4. Wiring diagrams.

5. Accessory list.

1.06 OPERATION AND MAINTENANCE MANUALS

A. Provide Operation and Maintenance manuals in accordance with Section 01782.

PART 2: PRODUCTS

2.01 ACCEPTABLE MANUFACTURERS

A. ASCO Transfer Switch

B. Or City of Houston Engineer and department approved equal.

2.02 CONSTRUCTION

A. General

1. An automatic transfer switch (ATS) shall be provided where indicated on the one line diagrams. Where indicated on the one line diagrams, the ATS shall include bypass and isolation switches (BP/IS). Where indicated on the one line diagrams, provide a Manual Transfer Switch (MTS) similar to an ATS but without automatic controls. Voltage and continuous current ratings and number of poles shall be as shown on the one line diagrams.

2. On 3 phase, 4 wire systems, utilizing ground fault protection, a true 4 pole switch shall be supplied with all four poles mounted on a common shaft. The continuous current rating and the closing and withstand rating of the fourth pole shall be identical to the rating of the main poles.

3. The combination automatic transfer bypass-isolation switch shall be mounted in a freestanding NEMA 1 enclosure, unless otherwise indicated. Enclosures shall be fabricated from 12 gauge steel. The enclosure shall be sized to exceed minimum wire bending space required by UL 1008. Both units shall be bused together with silver plated copper bus to provide a complete pre-tested assembly. Aluminum bus, and/or cable interconnections are not acceptable. Construction shall be such that the contractor needs to install only the power and control connections.

4. Bypass-isolation switches shall provide a safe and convenient means for manually bypassing and isolating the automatic transfer switch, regardless of the condition or position of the ATS, with the ability to be used as an emergency back-up system in the event the transfer switch should fail. In addition, the bypass-isolation switch shall be utilized to facilitate maintenance and repair of the automatic transfer switch.

5. The automatic transfer switch shall be completely isolated from the bypass-isolation switch by means of insulating barriers and separate access doors to positively prevent hazard to operating personnel while servicing the automatic transfer switch.

6. The transfer switch shall be equipped with an internal welded steel pocket, housing an operations and maintenance manual.

7. The combination automatic transfer bypass-isolation switch shall be top and bottom accessible.

8. The main contacts shall be capable of being replaced without removing the main power cables.

9. The main contacts shall be visible for inspection without any major disassembly of the transfer switch.

10. All bolted bus connections shall have Belleville compression type washers.

11. When a solid neutral is required, a fully rated bus bar with required copper solderless mechanical type neutral lugs shall be provided.

12. Control components and wiring shall be front accessible. All control wires shall be multiconductor 14 gauge 600 volt SIS switchboard type point to point harness. All control wire terminations shall be identified with tubular sleeve-type markers.

13. The switch shall be equipped with 90 degrees C rated copper solderless mechanical type lugs.

14. The complete combination automatic transfer bypass-isolation switch assembly shall be factory tested to ensure proper operation and compliance with the specification requirements. A copy of the factory test report shall be available upon request.

B. Bypass-Isolation Construction

1. All main contacts and operating linkages of the bypass-isolation section shall be identical to the ATS, except that the operation shall be manual.

2. The bypass-isolation switch shall have the same electrical ratings of ampacity, voltage, short circuit withstand, and temperature rise capability as the associated ATS. The bypass-isolation switch shall be the load-break type. The main contacts of the bypass switch shall be mechanically locked in both the normal bypass and emergency bypass positions without the use of hooks, latches, magnets, or springs and shall be silver-tungsten alloy, protected by arcing contacts with magnetic blowouts on each pole. The switching mechanism shall provide "quick-break," "quick-make" operation of the contacts.

3. The primary buswork of the drawout automatic transfer switch shall be connected to the stationary bus stabs in the freestanding cubicle by silver plated, segmented, self-aligning, primary disconnect fingers to facilitate proper alignment between the removable drawout when the ATS is withdrawn and shall be available for inspection without disturbing or de-energizing the main bus.

4. The secondary control disconnect contacts mounted on the ATS shall be self-aligning and shall plug into the stationary elements mounted on the freestanding cubicle. Separate, manual, secondary control disconnect plugs are not acceptable.

5. The isolating portion of the bypass-isolation shall allow the automatic transfer switch to be disconnected from all sources of power and control without opening the enclosure door. The transfer switch shall have a true drawout configuration which does not require disconnection of any electrically or mechanical device by maintaining personnel. The automatic transfer switch shall be provided with rollers or casters to allow it to be removed from its enclosure simply by rolling it out. Positive mechanical interlocks shall be provided to insure that the bypass-isolation functions can be accomplished without the danger of a short circuit. Overlapping contact bypass-isolation switches, that are dependent upon the position of the automatic transfer switch for proper operation, are not acceptable.

6. A fourth pole, switched neutral shall be provided if the associated automatic transfer switch is designed as 4-pole. Basic 4-pole, bypass-isolation switch construction shall be identical to the associated automatic transfer switch construction.

7. Necessary controls shall be provided to ensure that the "engine run" circuit remains closed when the switch is in the bypass-to-emergency position, even though the associated transfer switch is in the "normal" position or completely removed from the enclosure.

C. Automatic Transfer Switch

1. The transfer switch shall be double throw, actuated by <u>two electric operators</u> momentarily energized, and connected to the transfer mechanism by a simple over center type linkage. Minimum transfer time shall be 400 milliseconds.

2. The normal and emergency contacts shall be positively interlocked mechanically and electrically to prevent simultaneous closing. Main contacts shall be mechanically locked in both the normal and emergency positions without the use of hooks, latches, magnets, or springs, and shall be silver-tungsten alloy. Separate arcing contacts with magnetic blowouts shall be provided on all transfer switches. Interlocked, molded case circuit breakers or contactors are <u>not</u> acceptable.

3. Transfer switches of all ampere ratings shall use a stored energy, "quick-break", "quick-make" design. Transfer switches which rely on electrical operator speed to move contacts are not acceptable.

4. The transfer switch shall be equipped with a safe external manual operator, arranged so that the transfer switch quick break - quick make mechanism can be operated manually under load without opening the enclosure door, designed to prevent injury to operating personnel. The manual operator shall provide the same contact to contact transfer speed as the electrical operator to prevent a flashover from switching the main contacts slowly. The external manual operator shall be safely operated from outside of the transfer switch enclosure while the enclosure door is closed.

5. Provide 3 current transformers on the load size of the ATS which match the current rating of the ATS.

D. Automatic Transfer Switch Controls

1. The transfer switch shall be equipped with a microprocessor based control system, to provide all the operational functions of the automatic transfer switch. The controller shall have two asynchronous serial ports. The controller shall have a real time clock with battery back-up.

2. The CPU shall be equipped with self diagnostics which perform periodic checks of the memory I/O and communication circuits, with a watchdog/power fail circuit

3. The controller shall also be capable of monitoring, logging and trending power data. The controller shall connected to Plant SCADA system for monitoring.

4. The controller shall be accurate to 1% measured. Voltage and current for all phases shall be sampled simultaneously to assure high accuracy in conditions of low power factor or large waveform distortions (harmonics).

5. The controller shall be capable of operating at nominal frequencies of 45 to 66 Hz.

6. The controller shall accept inputs from industry standard current transformers (5A secondary). Direct phase voltage connections, 600 VAC and under, shall be possible without the use of PT's.

7. The controller shall be capable of being applied in single or 3-phase, three and four wire circuits.

8. All setup parameters required by the controller for power monitoring shall be stored in non-volatile memory and retained in the event of a control power interruption.

9. The following metered readings shall be communicated by the Controller, via local display and serial communication.

   Current, per phase RMS and neutral
   Current Unbalance %

Voltage, phase-to-phase and phase-to-neutral
Voltage Unbalance %
Real power (KW), per phase and 3-phase total
Apparent power (KVA), per phase and 3-phase total
Reactive power (KVAR), per phase and 3-phase total
Power factor, 3-phase total & per phase
Frequency
Accumulated Energy, (KWH, KVAH, and KVARH)

10. Displaying each of the metered quantities shall be accomplished through the use of menu scroll buttons.

11. Setup for systems requirements shall be allowed through the local access display. Setup provisions shall include:

    CT rating (xxxxx:5)
    System type (single; three phase, 3 or 4 wire)

12. Reset of the following electrical parameters shall also be allowed from the local access display:

    Real Energy (KWH)
    Apparent Energy (KVAH)
    Reactive Energy (KVARH)

13. All reset and setup functions shall have a means for protection against unauthorized/accidental changes.

14. The Controller shall be capable of storing records in memory for access either locally or remotely for up to 100 events. The reports shall include date, time and a description of the event and shall be maintained in a non volatile memory.

15. The controller shall use industry standard open architecture communication protocol for high speed serial communications via multidrop connection to other controllers and to a master terminal with up to 4000 ft of cable, or further, with the addition of a communication repeater. The serial communication port shall be RS422/485 compatible.

16. The serial communication port shall allow interface to either the manufacturer's or the owner's furnished remote supervisory control.

17. The controller shall have password protection required to limit access to qualified and authorized personnel.

18. The controller shall include a 20 character, LCD display, with a keypad, which allows access to the system.

19. The controller shall be capable of storing the following records in memory for access either locally or remotely:

    a. Number of hours transfer switch is in the emergency position (total since record reset).

    b. Number of hours emergency power is available (total since record reset).

    c. Total transfer in either direction (total since record reset).

    d. Date, time, and description of the last four source failures.

    e. Date of the last exercise period.

    f. Date of record reset.

E. Sequence of Operation

1. When the voltage on any phase of the normal source drops below 80% or increases to 120%, or frequency drops below 90%, or increase to 110%, or 20% voltage differential between phases occurs, after a programmable time delay period of 0-9999 seconds factory set at 3 seconds to allow for momentary dips, the engine starting contacts shall close to start the generating plant.

2. The transfer switch shall transfer to emergency when the generating plant has reached specified voltage and frequency on all phases.

3. After restoration of normal power on all phases to a preset value of at least 90% to 110% of rated voltage, and at least 95% to 105% of rated frequency, and voltage differential is below 20%, an adjustable time delay period of 0-9999 seconds (factory set at 300 seconds) shall delay retransfer to allow stabilization of normal power. If the emergency power source should fail during this time delay period, the switch shall automatically return to the normal source.

4. After retransfer to normal, the engine generator shall be allowed to operate at no load for a programmable period of 0-9999 seconds, factory set at 300 seconds.

F. Automatic Transfer Switch Accessories

1. Programmable three phase sensing of the normal source set to pickup at 90% and dropout at 80% of rated voltage and overvoltage to pickup at 120% and dropout out at 110% of rated voltage. Programmable frequency pickup at 95% and dropout at 90% and over frequency to pickup at 110% and dropout at 105% of rated frequency. Programmable voltage differential between phases, set at 20%, and phase sequence monitoring.

2. Time delay for override of momentary normal source power outages (delays engine start signal and transfer switch operation). Programmable 0-9999 seconds. Factory set at 3 seconds.

3. Time delay to control contact transition time on transfer to either source. Programmable 0-9999 seconds, factory set at 10 seconds.

4. Time delay on retransfer to normal, programmable 0-9999 seconds, factory set at 300 seconds if not otherwise specified, with overrun to provide programmable 0-9999 second time delay, factory set at 300 seconds, unloaded engine operation after retransfer to normal.

5. Time delay on transfer to emergency, programmable 0-9999 seconds, factory set at 3 seconds.

6. A maintained type load test switch shall be included to simulate a normal power failure, keypad initiated.

7. A remote type load test switch shall be included to simulate a normal power failure, remote switch initiated.

8. A time delay bypass on retransfer to normal shall be included. Keypad initiated.

9. Contact, rated 10 Amps 30 volts DC, to close on failure of normal source to initiate engine starting.

10. Contact, rated 10 Amps 30 volts DC, to open on failure of normal source for customer functions.

11. Light emitting diodes shall be mounted on the microprocessor panel to indicate: switch is in normal position, switch is in emergency position and controller is running.

12. A plant exerciser shall be provided with (10) 7 day events, programmable for any day of the week and (24) calendar events, programmable for any month/day, to automatically exercise generating plant programmable in one minute increments. Also include selection of either "no load" (switch will <u>not</u> transfer) or "load" (switch will transfer) exercise period. Keypad initiated.

13. Provision to select either "no commit" or "commit" to transfer operation in the event of a normal power failure shall be included. In the "no commit position," the load will transfer to the emergency position unless normal power returns before the emergency source has reach 90% of it's rated values (switch will remain in normal). In the "commit position" the load will transfer to the emergency position after any normal power failure. Keypad initiated.

14. Two auxiliary contacts rated 10 Amp, 120 volts AC (for switches 100 to 800 amps) 15 amp, 120 volts AC (for switches 1000 to 4000 amps), shall be mounted on the main shaft, one closed on normal, the other closed on emergency. Both contacts will be wired to a terminal strip for ease of customer connections.

15. A three phase digital LCD voltage readout, with 1% accuracy shall display all three separate phase to phase voltages simultaneously, for both the normal and emergency source.

16. A digital LCD frequency readout with 1% accuracy shall display frequency for both normal and emergency source.

17. An LCD readout shall display normal source and emergency source availability.

18. Include (2) time delay contacts that open simultaneously just (milliseconds) prior to transfer in either direction. These contacts close after a time delay upon transfer. Programmable 0-9999 seconds after transfer.

G. Bypass-Isolation Switch

1. Operation of the bypass-isolation shall be assured, regardless of the position of the automatic transfer switch.

2. Light emitting diodes shall be provided to indicate: bypass position, fully isolated position, and source availability.

3. Positive sequencing of all contacts, with no possible intermediate position, shall be accomplished through the manual operators from a dead front location. Electrical testing during maintenance of the automatic transfer switch shall be possible in the bypass position.

4. Inherent double-throw (break-before-make) operation shall provide positive assurance against accidental short circuitry of the normal and emergency power sources. Arrangements utilizing interlocking of single-throw devices are not acceptable. The operating speed of the contacts shall be independent of the speed at which the handle is moved.

5. The switch shall be fully manually operated and shall not be dependent upon electrical operators, relays, or interlocks for operation.

6. The bypass-isolation switch shall be listed by Underwriters' Laboratories, Inc., Standard UL-1008 and meet the identical withstand ratings of its associated transfer switch.

7. Both the automatic transfer switch and bypass-isolation switch shall be supplied by the same manufacturer. The manufacturer shall verify that the design has been in continuous production for not less than 10 years, with at least 100 similar installations operating continuously and successfully for that period of time.

8. Bypass-isolation switch must have mechanical separation of normal and emergency to assure against accidental connection of unsynchronized sources. Electrical interlocking will not be considered acceptable.

H. Other Items

1. Automatic transfer switches and bypass-isolation switches shall be listed by Underwriters Laboratories, Inc., Standard UL-1008 with 3 cycle short circuit closing and withstand as follows:

RMS Symmetrical Amperes 480 VAC

3 Cycle Amperes	Closing and Withstand	Rating with Current Limiting Fuses
100-400	42,000	200,000
600-800	65,000	200,000
1000-1200	85,000	200,000
1600-4000	100,000	200,000

2. During the 3 cycle closing and withstand tests, there shall be no contact welding or damage. The 3 cycle tests shall be performed without the use of current limiting fuses. The test shall verify that contacts separation has not occurred, and there is contact continuity across all phases. Test procedures shall be in accordance with UL-1008, and testing shall be certified by Underwriters' Laboratories, Inc.

3. When conducting temperature rise tests to UL-1008, the manufacture shall include post-endurance temperature rise tests to verify the ability of the combination transfer bypass-isolation switch to carry full rated current after completing the overload and endurance tests.

4. The microprocessor controller shall meet the following requirements:

   a. Storage conditions - 25 degrees C to 85 degrees C

   b. Operation conditions - 20 degrees C to 70 degrees C ambient

   c. Humidity 0 to 99% relative humidity, noncondensing

   d. Capable of withstanding infinite power interruptions

e. Surge withstand per ANSI/IEEE C-37.90A-1978

5. Manufacturer shall provide copies of test reports upon request.

6. Provide a 12" x 6" red nameplate engraved with" "Open standby generator circuit breaker prior to opening enclosure. Generator is started automatically by load bank controls and causes the emergency terminals to be energized".

I. Manufacturer

1. The manufacturer of the automatic transfer and bypass-isolation switch combination shall have a factory certified field service representative located within 100 miles that is available to arrive at the project site within 4 hours after being called.

2. The combination automatic transfer and bypass-isolation switch manufacturer shall employ a nationwide factory-direct, field service organization, available on a 24-hour a day, 365 days a year, call basis.

3. The manufacture shall include an 800 telephone number, for field service contact, affixed to each enclosure.

4. The manufacturer shall maintain records of each combination automatic transfer and bypass-isolation switch, by serial number, for a minimum 20 years.

2.03 WIRING AND COMPONENT IDENTIFICATION

A. Identify power and control wiring with tags as required by Specification 16195, Electrical Identification.

B. Identify equipment and internal components with nameplates as required by Specification 16195, Electrical Identification.

PART 3: EXECUTION

3.01 INSTALLATION

A. The ATS units or MTS unit shall be provided with adequate lifting means for ease of installation of wall or floor mounted enclosures.

B. Provide access and working space as indicated or as required.

C. Install unit on a 3-1/2" reinforced concrete pad.

3.02 ADJUSTMENTS

A. Tighten assembled bolted connections with appropriate tools to manufacturer's torque recommendations prior to first energization.

3.03 FACTORY START-UP

A. Provide the services of a factory certified technician to factory startup the unit and correct any deficiencies. Provide a certified startup report. Factory start-up includes adjusting ATS settings.

3.04 TESTING

A. Provide the services of a factory certified technician to fully function test the unit with the generator set to confirm proper operation. Provide a certified test report.

3.05 VENDOR TRAINING

A. Provide two four (4) training sessions for 8 persons. Training sessions will be held on different days. Provide training materials for trainees.

END OF SECTION

Section 16361

MEDIUM VOLTAGE METAL ENCLOSED FUSIBLE SWITCHGEAR

PART 1: GENERAL

1.01 SECTION INCLUDES

A. Medium voltage metal enclosed fusible load interrupter switchgear in a NEMA 3R enclosure as specified herein and as shown on the project drawings for use on a 2.4 kV system.

1.02 MEASUREMENT AND PAYMENT

A. No separate payment will be made for work performed under this Section. Include the cost for this work in the lump sum base bid.

1.03 REFERENCES

A. The medium voltage metal enclosed fusible load interrupter switchgear and all components shall be designed, manufactured and tested in accordance with the latest revisions to the following standards:

1. ANSI/IEEE C37.20.3
2. ANSI/IEEE C37.20.4
3. ANSI C37.22
4. NEMA SG5
5. NEMA SG6
6. CSA22.2 No.31-M89
7. EEMAC G8-3.3

B. Switchgear shall be listing by Underwriters Laboratories Inc. (UL).

1.04 SUBMITTALS – FOR REVIEW/APPROVAL

A. The following information shall be submitted, in accordance with Section 01330:

1. Master drawing index

2. Front view elevation
3. Floor plan
4. Top view
5. Single line
6. Nameplate schedule
7. Component list
8. Conduit entry/exit locations
9. Assembly ratings including:
    a. Short-circuit rating
    b. Voltage
    c. Continuous current
    d. Basic Impulse Level
10. Major component ratings including:
    a. Voltage
    b. Continuous current
    c. Interrupting ratings
11. Cable terminal sizes
12. Connection details between close-coupled assemblies
13. Composite floor plan of close-coupled assemblies
14. Descriptive bulletins
15. Product data sheets

1.05 SUBMITTALS – FOR RECORD PURPOSES

A. The following information shall be submitted for record purposes, in accordance with Section 01330:

1. Final as-built drawings and information for items listed in the above paragraph

2. Wiring diagrams

3. Certified production test reports

4. Installation information including equipment anchorage provisions

1.06 QUALIFICATIONS

A. The manufacturer of the assembly shall be the manufacturer of the major components within the assembly.

B. For the equipment specified herein, the manufacturer shall be ISO 9000, 9001 or 9002 certified.

C. The manufacturer of this equipment shall have produced similar electrical equipment for a minimum period of five (5) years.

1.07 DELIVERY, STORAGE AND HANDLING

A. Equipment shall be handled and stored in accordance with manufacturer's instructions. One (1) copy of these instructions shall be included with the equipment at time of shipment.

B. Each switchgear assembly shall be split into shipping groups as determined by the Contractor. Shipping groups shall be designed to be shipped by truck. Shipping groups shall be bolted to skids. Accessories shall be packaged and shipped separately. Each switchgear shipping group shall be equipped with lifting eyes for handling by crane.

1.08 OPERATION AND MAINTENANCE MANUALS

A. Equipment operation and maintenance manuals shall be provided with each assembly shipped, in accordance with Section 01782, and shall include instruction leaflets and instruction bulletins for the complete assembly and each major component.

B. Provide ten (10) additional sets of operation and maintenance manuals.

PART 2: PRODUCTS

2.01 ACCEPTABLE MANUFACTURERS

A. Eaton (Type MVS)

B. Square D Company (Type HVL Only)

The listing of specific manufacturers above does not imply acceptance of their products that do not meet the specified ratings, features and functions. Manufacturers listed above are not relieved from meeting these specifications in their entirety.

2.02 RATINGS

A. Switchgear assembly ratings shall be as follows:

1. Nominal System Voltage	2.4 kV three-phase three wire
2. System Grounding	Ungrounded Delta
3. Available System 3-Phase Short	40 kA Symmetrical
4. Maximum Design Voltage	5 Kv
5. BIL	60 kV
6. Main Cross Bus Continuous Current	1200A
7. Main Cross Bus Momentary Current (10 Hz)	40 kA Asymmetrical
8. Main Cross Bus 2 – Second Current	25 kA Symmetrical
9. Fused Switch Interrupting Capacity	40 kA Symmetrical
10. Fused Switch Fault Close	64 kA Asymmetrical
11. Fused Switch Maximum (Continuous / Load Break)	1200 Amperes

2.03 SWITCHGEAR CONSTRUCTION

A. The medium voltage metal-enclosed fusible load interrupter switchgear shall consist of deadfront, completely metal-enclosed vertical sections containing load interrupter switches and fuses of the number, rating and type noted on the drawings or specified herein. An incoming vertical section shall be provided to match the configuration of the fused switch which is being replaced. The manufacturer shall visit the project site to

obtain information so the new fused switch configuration will match the existing conduit stub-up arrangement.

B. The following features shall be supplied on every vertical section containing a three-pole, two-position open-closed switch:

1. A large 8-inch x 16-inch high-impact viewing window that permits full view of the position of all three switch blades through the closed door. The window shall not be more than 58-inches above the switch pad level to allow ease of inspection.

2. The door shall be interlocked with the switch so that:

   a. The switch must be opened before the door can be opened.

   b. The door must be closed before the switch can be closed.

3. A hinged grounded metal barrier bolted closed in front of every switch to prevent inadvertent contact with any live part, yet allow for a full-view inspection on the switch blade position.

4. Provision for padlocking the switch in the open or closed position.

5. Green OPEN, Red CLOSED switch position indicators with the words "Open" and "Closed" in Spanish and English.

6. A hinged cover with rustproof quarter turn nylon latches over the switch operating mechanism to discourage casual tampering.

7. The Switch shall be removable as a complete operational component.

C. Vertical section construction shall be of the universal frame type using die-formed and bolted parts. All enclosing covers and doors shall be fabricated from steel whose thickness shall be equal to or greater than those specified in ANSI/IEEE C37.20.3. No owner removable hardware for covers or doors shall be thread-forming type. To facilitate installation and maintenance of cables and bus in each vertical section, a split removable top cover and padlockable hinged rear door held closed by bolts shall be provided. A G90 grade galvanized base shall isolate equipment from contact with the concrete pad providing protection from rust. Heavy-duty hot dipped galvanized anchor clips shall be provided to anchor the switchgear to the concrete pad.

D. Each vertical section containing a switch shall have a single, full-length, flanged front door and shall be equipped with two (2) rotary latch-type padlockable handles. Provision shall be made for operating the switch and storing the removable handle without opening the full length door.

E. Each load interrupter switch shall have the following features:

1. Three-pole gang-operated mechanism.

2. Manual quick-make, quick-break over-toggle-type mechanism that does not require the use of a chain or a cable for operation, and utilizes a heavy-duty coil spring to provide opening and closing energy.

3. The speed of opening and closing the switch shall be independent of the operator, and it shall be impossible to tease the switch into any intermediate position under normal operation.

4. Separate main and break contacts to provide maximum endurance for fault close and load interrupting duty.

5. Insulating barriers between each phase and between the outer phases and the enclosure.

6. A maintenance provision for slow closing the switch to check switch blade engagement and slow opening the switch to check operation of the arc interrupting contacts.

2.04 BUS

A. All phase buses shall be silver-plated copper.

B. Ground bus shall be silver-plated copper and be directly fastened to a galvanized metal surface of each vertical section, and be of a size sufficient to carry the rated (2-second) current of the switchgear assembly.

2.05 BUS INSULATION SYSTEM

A. All bus shall be supported utilizing a High Strength and High Creep, finned support providing 14-inch of creep distance between phases and ground. The molded fins shall be constructed of high track resistant Cycloaliphatic Epoxy.

B. All standoff insulators on switches and fuse mountings shall be Glass Polyester or Cycloaliphatic Epoxy.

2.06 WIRING/TERMINATIONS

A. One (1) terminal pad per phase shall be provided for attaching contractor-supplied cable terminal lugs for a maximum of two (2) conductors per phase of the sizes indicated on the drawings. Sufficient space shall be allowed for contractor supplied electrical stress relief termination devices.

B. Small wiring, fuse blocks and terminal blocks within the vertical section shall be furnished as required by the switchgear manufacturer. Each control wire shall be labeled with wire markers. Terminal blocks shall be provided for owner's connections to other apparatus.

2.07 FUSES

A. Fault protection shall be provided by fuses with continuous ratings as shown in the project documents. The fuses shall be CLE current limiting, bolt-in type. Furnish six (6) spare fuses for each fused switch. Fuse/switch integrated momentary and fault close ratings specified shall have been verified by test and UL certified.

2.08 ENCLOSURES

A. Enclosures shall be constructed per IEEE/ANSI C37outdoor specifications. (Meets or exceeds NEMA 3R.)

B. Each vertical section shall be ventilated at the top and bottom, both front and rear, to allow airflow to provide cooling and to help prevent buildup of moisture within the structure.

2.09 NAMEPLATES

A. A nameplate shall be mounted on the front door of each switch vertical section in accordance with the drawings. For this project, the nameplate shall read, "Main 2.4 kV Fused Switch".

2.10 FINISH

A. Prior to assembly, all enclosing steel shall be thoroughly cleaned and phosphatized. A powder coating shall be applied electrostatically, then fused-on by baking in an oven. The coating is to have a thickness of not less than 1.5 mils. The finish shall have the following properties:

Impact resistance (ASTM D-2794)	60 direct/60 indirect
Pencil hardness (ASTM D-3363)	H
Flexibility (ASTM D-522)	Pass 1/8-inch mandrel
Salt spray (ASTM B117-85 [20])	600 hours
Color	ANSI 61 gray

PART 3: EXECUTION

3.01 FACTORY TESTING

A. Standard factory tests shall be performed on the equipment under this section. All tests shall be in accordance with the latest version of ANSI and NEMA standards.

B. The manufacturer shall provide five (5) certified copies of factory test reports.

3.02 FIELD QUALITY CONTROL

A. Provide the services of a qualified factory-trained manufacturer's representative to assist the Contractor in installation and start-up of the equipment specified under this section. The manufacturer's representative shall provide technical direction and assistance to the Contractor in general assembly of the equipment, connections and adjustments, and testing of the assembly and components contained therein.

B. The Contractor shall provide five (5) copies of the manufacturer's field start-up report.

3.03 MANUFACTURER'S CERTIFICATION

A. The Contractor shall provide a qualified factory-trained manufacturer's representative shall certify in writing that the equipment has been installed, adjusted and tested in accordance with the manufacturer's recommendations.

B. The Contractor shall provide five (5) copies of the manufacturer's representative's certification.

3.04 VENDOR TRAINING

A. Provide two hours of vendor training.

3.05 INSTALLATION

A. The Contractors shall install all equipment per the manufacturer's recommendations and the project drawings.

B. All necessary hardware to secure the assembly in place shall be provided by the contractor.

END OF SECTION

Section 16402

UNDERGROUND DUCT BANKS

PART 1: GENERAL

1.01 SECTION INCLUDES

A. Underground electrical duct banks.

1.02 MEASUREMENT AND PAYMENT

A. No separate payment will be made under this section. Include the cost for this work in the lump sum base bid.

1.03 REFERENCES

A. National Fire Protection Association (NFPA): No. 70 - National Electrical Code (NEC) Appendix B.

1.04 SUBMITTALS

A. Catalog cut sheets of the ducts and spacers.

1.05 DELIVERY, STORAGE AND HANDLING

A. Have duct spacers and associated hardware packed and crated to avoid damage during shipment and handling.

B. Clearly mark packages or crates stating that the material is for electrical duct banks only.

PART 2: PRODUCTS

2.01 ACCEPTABLE MANUFACTURERS

A. Thomas and Betts.

B. Underground Devices Inc.

C. Walker Division, Butler Manufacturing Company.

2.02 MATERIALS AND EQUIPMENT

A. Conduit. Construct ducts using Schedule 40 Rigid PVC conduit. Refer to Section 16111 - Conduit, Fittings and Bodies.

B. Spacers. Secure conduit with non-magnetic, universal, interlocking-type spacers for both horizontal and vertical duct arrangements.

C. Concrete. Use steel reinforced, red 3,000 PSI concrete as duct encasement. Refer to Section 03100 Concrete Formwork.

PART 3: EXECUTION

3.01 PREPARATION

A. Verify from Drawings and field survey that the location of ductbanks does not interfere with any existing or new underground facilities.

B. Verify that materials are on site in proper condition and that sufficient quantity is on hand for the work.

C. Verify that trenches are in the correct places and prepared with sufficient depth and width to accommodate the duct banks, reinforcing rod, and concrete.

D. Be prepared for inspection of the duct banks before reinforcing rod is installed.

E. Before pouring concrete, verify that the ducts are free of debris and properly installed in the support and spacer systems and that the ducts are properly fitted together and firmly held in place by the hold down hardware.

F. Provide 24-hour notice to Project Manager, Wastewater Inspectors and the Local Code Inspector for cover-up inspection before pouring electrical conduit ductbanks.

3.02 INSTALLATION

A. Use the size and types of conduit as indicated on the Drawings for the various duct banks required for the project.

B. Make duct bank installations and penetrations through foundation walls watertight.

C. Assemble duct banks using non-magnetic saddles, spacers and separators. Position separators to provide 2-inch minimum concrete separation between the outer surfaces of the conduits.

D. Provide a 3-inch minimum concrete covering on both sides, top and bottom of concrete envelopes around conduits. Add red dye at the rate of 10 pounds per cubic yard to concrete used for envelopes for easy identification during subsequent excavation.

E. Firmly fix ducts in place during pouring of concrete. Carefully spade and vibrate the concrete to ensure filling of spaces between ducts.

F. Make bends with sweeps of radius not less than 6 times the smallest diameter of the raceway.

G. Make a transition from Schedule 40 PVC conduit to epoxy fiberglass conduit where duct banks enter building structures or stub-up for continuation above grade.

H. Make bends of 30 degrees or more using epoxy fiberglass large radius elbows.

I. Reinforce all duct banks.

   1. Reinforce duct banks with No. 5 longitudinal steel bars placed at each corner and along each face at a maximum parallel spacing of 6 inches on centers, and No. 4 stirrups transversely placed at 36-inch maximum longitudinal intervals.

   2. Maintain a maximum clearance of 2 inches from bars to the edge of the concrete encasement.

J. Where ducts enter structures such as handholes, manholes, pullboxes, or buildings, terminate the ducts in suitable end bells, insulated L-bushings, Meyers hubs or couplings on steel conduits. Tag cables entering pull boxes with stamped, stainless steel tags. Identify as designated in cable and conduit schedule.

K. Do not backfill with material containing large rock, paving materials, cinders, large or sharply angular substances, corrosive material, or other materials which can damage or contribute to corrosion of ducts or prevent adequate compaction of fill.

L. Install a bare stranded 4/0 copper duct bank ground in each duct bank envelope where duct banks terminate in switchgear or MCCs. Make ground electrically continuous throughout the entire duct bank system. Connect ground to switchgear and MCC ground buses and to above ground conduit extensions of the underground duct system.

M. After completion of the duct bank and prior to pulling cable, pull a mandrel, not less than 12 inches long and with a cross section approximately one-fourth inch less than the inside cross section of the duct, through each duct. Then pull a rag swab or sponge through to remove any particles of earth, sand or gravel that may have been left in the duct. Repull the rag or sponge swab until the swab emerges clean.

N. Use hemp rope to pull conductors into PVC conduit. Do not use nylon or wire cable for this purpose.

O. Install a warning ribbon approximately 12 inches below finished grade over underground duct banks. Refer to Section 16195 - Electrical Identification.

P. For manholes and pull boxes below grade, install wire racks to support cables properly around the perimeter and keep them dry.

Q. For manholes and pull boxes below grade, construct a french drain, or other drainage as detailed on the Drawings.

END OF SECTION

Section 16428

SWITCHBOARD

PART 1: GENERAL

1.01 SCOPE OF WORK

A. The Contractor shall furnish all labor and install, where indicated, a free-standing, dead-front type low voltage distribution switchboard, utilizing individual mounted circuit protective devices as specified herein, and as shown on the contract drawings.

1.02 MEASUREMENT AND PAYMENT

A. No separate payment will be made for work performed under this Section.

1.03 RELATED WORK

A. Section 01110 – Summary of Work.

B. Section 01330 – Submittal Procedures.

C. Section 01735 – Vendor Training.

D. Section 01782 – Operation and Maintenance Data.

E. Section 16195 – Electrical Identification.

1.04 REFERENCES

A. The low voltage distribution switchboard assembly and all components shall be designed, manufactured and tested in accordance with the latest applicable following standards:

1. NEMA PB-2
2. UL Standard 891.

1.05 SUBMITTALS – FOR REVIEW/APPROVAL

A. The following information shall be submitted in accordance with Section 01330:

1. Master drawing index
2. Front view elevation

3. Floor plan
4. Top view
5. Single line
6. Schematic diagram
7. Nameplate schedule
8. Component list
9. Conduit entry/exit locations
10. Assembly ratings including:

    a. Short-circuit rating
    b. Voltage
    c. Continuous current

11. Major component ratings including:

    a. Voltage
    b. Continuous current
    c. Interrupting ratings

12. Cable terminal sizes
13. Product data sheets.

1.06 SUBMITTALS – FOR RECORD PURPOSES

A. The following information shall be submitted for record purposes:

1. Final (as-built) drawings and information for items listed in the previous paragraph.
2. Wiring diagrams
3. Certified production test reports
4. Installation information

B. The final (as-built) drawings shall include the same drawings as the original construction drawings and shall incorporate all changes made during the manufacturing process.

1.07 QUALIFICATIONS

A. The manufacturer of the assembly shall be the manufacturer of the circuit protective devices within the assembly.

B. For the equipment specified herein, the manufacturer shall be ISO 9001 or 9002 certified.

C. The manufacturer of this equipment shall have produced similar electrical equipment for a minimum period of five (5) years. When requested by the Engineer, an acceptable list of installations with similar equipment shall be provided demonstrating compliance with this requirement.

1.08 REGULATORY REQUIREMENTS

A. The low voltage switchboard shall be UL labeled.

1.09 DELIVERY, STORAGE AND HANDLING

A. Equipment shall be handled and stored in accordance with manufacturer's instructions. One (1) copy of these instructions shall be included with the equipment at time of shipment.

1.10 OPERATION AND MAINTENANCE MANUALS

A. Equipment operation and maintenance manuals shall be provided with each assembly shipped, and shall include instruction leaflets and instruction bulletins for the complete assembly and each major component.

PART 2: PRODUCTS

2.01 ACCEPTABLE MANUFACTURERS

A. Eaton.

B. Schneider/Square D Company.

The listing of specific manufacturers above does not imply acceptance of their products that do not meet the specified ratings, features and functions. Manufacturers listed above are not relieved from meeting these specifications in their entirety.

2.02 RATINGS

A. The assembly shall be rated to withstand mechanical forces exerted during short-circuit conditions when connected directly to a power source having available fault current as indicated on the one line diagram in the Contract Drawings.

B. Voltage rating to be as indicated on the Contract Drawings.

2.03 CONSTRUCTION

A. Switchboard shall consist of the required number of vertical sections bolted together to form a rigid assembly. The sides and rear shall be covered with removable bolt-on covers. All edges of front covers or hinged front panels shall be formed. Provide adequate ventilation within the enclosure. Provide Eaton Magnum SB Switchboards with drawout circuit breakers or an equivalent unit by Schneider/Square D Company.

B. All sections of the switchboard shall align front and rear with depth as shown on the drawings. All protective devices shall be group mounted. Devices shall be front removable and load connections front and rear accessible. Rear access shall be provided. Provide barriers between each structure and between lug connections and horizontal busses. There shall be a vertical barrier of glass polyester between the device compartment and the bus compartment.

C. The assembly shall be provided with adequate lifting means.

D. Provide a rear compartment vertical insulating barrier between the cable compartment and the main bus to protect against inadvertent contact with main or vertical bus bars.

E. The switchboard shall be suitable for use as service entrance equipment and be labeled in accordance with UL requirements.

2.04 BUS

A. All bus bars shall be silver-plated copper. Main horizontal bus bars shall be mounted with all three phases arranged in the same vertical plane. Bus sizing shall be based on NEMA standard temperature rise criteria of 65 degrees C over a 40 degrees C ambient (outside the enclosure).

B. Provide a full capacity neutral bus where a neutral bus is indicated on the drawings.

C. A copper ground bus (minimum 1/4 x 2 inch) shall be furnished firmly secured to each vertical section structure and shall extend the entire length of the switchboard.

D. All hardware used on conductors shall be high-tensile strength and zinc-plated. All bus joints shall be provided with conical spring-type washers.

2.05 WIRING/TERMINATIONS

A. Small wiring, necessary fuse blocks and terminal blocks within the switchboard shall be furnished as required. Control components mounted within the assembly, such as fuse blocks, relays, pushbuttons, switches, etc., shall be suitably marked for identification corresponding to appropriate designations on manufacturer's wiring diagrams.

B. Copper or bronze type terminals shall be provided for all line and load terminations suitable for copper cable rated for 75 degrees C of the size as indicated on the drawings.

C. Copper or bronze lugs shall be provided in the incoming line section for connection of the main grounding conductor. Additional lugs for connection of other grounding conductors shall be provided as indicated on the drawings.

D. All control wire shall be type SIS, bundled and secured with nylon ties. Insulated locking spade terminals shall be provided for all control connections, except where saddle-type terminals provided are integral to a device. All current transformer secondary leads shall first be connected to conveniently accessible short-circuit terminal blocks before connecting to any other device. All groups of control wires leaving the switchboard shall be provided with terminal blocks with suitable numbering strips. Provide wire markers at each end of all control wiring.

E. Comply with Specification Section 16195, Electrical Identification.

2.06 MAIN PROTECTIVE DEVICE

A. The main protective device shall be a manually operated, drawout, insulated case circuit breaker, Eaton Magnum SB or approved equal with a minimum interrupting rating of 85,000 amperes RMS Symmetrical. The main protective device trip unit shall be Eaton Digitrip 1150+ or approved equal.

2.07 FEEDER PROTECTIVE DEVICES

A. Feeder protective devices shall be thermal-magnetic, molded case circuit breakers with minimum interrupting ratings of 85,000 amperes RMS Symmetrical.

2.08 METERING

A. Provide a Siemens PAC4200 solid state digital metering unit with current transformers for metering the main circuit breaker.

2.09 ENCLOSURE

A. NEMA 1 Enclosure.

2.10 NAMEPLATES

A. See Specification Section 16195, Electrical Identification.

B. Control components mounted within the assembly such as fuse blocks, relays, pushbuttons, switches, etc., shall be suitably marked for identification corresponding to appropriate designations on manufacturer's wiring diagrams.

2.11 FINISH

A. All exterior and interior steel surfaces of the switchboard shall be properly cleaned and provided with a rust-inhibiting phosphatized coating. Color and finish of the switchboard shall be ANSI 61 light gray.

2.12 SURGE PROTECTIVE DEVICE (SPD)

A. Provide a surge protective device rated 300 kA per phase and 150 kA per mode as indicated on the one line diagrams.

2.13 SHORT CIRCUIT AND COORDINATION STUDY

A. Provide a short circuit and coordination study to develop settings for circuit breakers in switchboards furnished as part of this project.

PART 3: EXECUTION

3.01 FACTORY TESTING

A. The following standard factory tests shall be performed on the equipment provided under this section. All tests shall be in accordance with the latest version of UL and NEMA standards.

1. All switchboard shall be completely assembled, wired, adjusted, and tested at the factory. After assembly, the complete switchboard will be tested for operation under simulated service conditions to assure the accuracy of the wiring and the functioning of all equipment. The main circuits shall be given a dielectric test of 2200 volts for one (1) minute between live parts and ground and between opposite polarities. The wiring and control circuits shall be given a dielectric test of 1500 volts for one (1) minute between live parts and ground

B. The manufacturer shall provide ten (10) certified copies of factory test reports.

3.02 TRAINING

A. The Contractor shall provide a training session for up to ten (10) owner's representatives for four (4) hours at the jobsite location. Training and instruction time shall be in addition to that required for start-up service.

B. The training shall be conducted by the manufacturer's qualified representative.

C. The training program shall consist of the following:

1. Instructions on the proper operation of the assembly, circuit breakers, and major components within the assembly

2. Instructions on the proper maintenance of the equipment.

3.03 INSTALLATION

A. The Contractors shall install all equipment per the manufacturer's instructions, contract drawings and the National Electrical Code.

B. The assembly shall be provided with adequate lifting means and shall be capable of being moved into installation position and bolted directly to the floor. All necessary hardware to secure the assembly in place shall be provided by the Contractor.

3.04 CIRCUIT BREAKER SETTINGS

A. The switchboard vendor shall set all adjustable trip circuit breakers in switchboards.

END OF SECTION

Section 16461

DRY-TYPE TRANSFORMERS

PART 1: GENERAL

1.01 SECTION INCLUDES

A. Specifications for general purpose dry-type transformers:

1.02 MEASUREMENT AND PAYMENT

A. No separate payment will be made for work performed under this Section. Include the cost for this work in the lump sum Base Bid.

1.03 REFERENCES

A. American National Standards Institute/National Electrical Manufacturers Association (ANSI/NEMA)

1. ANSI No. C89.2: Transformers

2. NEMA TP-1: Guide for determining energy efficiency for distribution transformers

B. Underwriters Laboratories (UL): UL 506 - Standard for Safety Specialty Transformers.

C. American National Standards Institute/National Fire Protection Association ANSI/NFPA): NFPA No. 70 -National Electrical Code (NEC); Article 450 - Transformers and Transformer Vaults.

1.04 SUBMITTALS

A. Submit the following under provisions of Section 01330 – Submittal Procedures:

1. Outline dimensions, support points and unit weight.

2. Electrical characteristics, including impedance and tap configuration.

3. Insulation type, rated temperature rise, and total insulation system.

4. Test reports, for transformers 300 KVA and above, indicating losses at 25, 50, 75 and 100 percent rated load and sound levels.

5. Connection diagrams.

6. Catalog data.

7. Operation and maintenance data.

1.05 QUALITY ASSURANCE

A. Tests. Run manufacturer's test on transformers in accordance with Underwriters Laboratories (U.L.) Standard No. UL-506.

1.06 DELIVERY, STORAGE AND HANDLING

A. Have transformers individually packed and crated to permit ease of handling and to provide protection from damage during shipping, handling and storage.

PART 2: PRODUCTS

2.01 ACCEPTABLE MANUFACTURERS

A. Eaton

B. Square D Company

2.02 MATERIALS AND EQUIPMENT

A. Use dry-type transformers for general purpose applications.

B. Provide transformers with copper windings.

C. Select transformers designed and constructed in accordance with NEMA ST-1, NEMA ST-20 and the NEC Article 450.

D. For applications less than 15 kVA, use transformers that are encapsulated, non-ventilated type with 80 degree C temperature rise and 185 degree C insulation class.

E. Provide transformers with full capacity winding taps a minimum of two 2-1/2 percent above and two 2-1/2 percent below normal voltage.

F. For applications 15 kVA and above use transformers that are the drip proof ventilated type for indoor mounting with 80 degree C temperature use and 220 degree C insulation class..

G. Use transformers with sound levels in accordance with NEMA ST-20.

H. Basic impulse level (BIL) shall be 10KV for transformers less than 300 KVA, 30KV for transformers 300KVA and larger.

I. Ground core and coil assembly to enclosure by means of a visible flexible copper strap.

J. Provide transformers with lifting eye bolts or brackets.

K. Provide transformer nameplates of stainless steel, marked in accordance with NEC Article 450-11. Fasten nameplate to the transformers with stainless steel screws or rivets.

L. Refer to the one-line diagram or the Drawings for transformer size, volt and wire configuration.

PART 3: EXECUTION

3.01 PREPARATION

A. Verify dimensions of housekeeping pads or other support structures to ensure proper fit.

B. Verify raceway and wiring drawings that are prepared for the transformers and check them against the manufacturer's information.

C. Verify that the protective devices planned for the transformers are in accordance with NEC Article 450.

3.02 INSTALLATION

A. Install transformers plumb and level and in accordance with manufacturer's instructions and the NEC Article 450.

B. Use flexible conduit for connection to transformer case. Make conduit connections to side panel of enclosure.

C. Mount transformers on isolation pads as required to isolate transformer noise from the buildings structure.

D. Wire transformer primary and secondary in accordance with the nameplate instructions and the designated voltages as shown on the one-line diagram.

END OF SECTION

Section 16475

OVERCURRENT PROTECTIVE DEVICES

PART 1: GENERAL

1.01 SUMMARY

A. Section Includes:

1. Overcurrent protective devices (OCPDs) rated 600 V and below and switching devices commonly associated with OCPDs.

B. Circuit breakers installed in panelboards are specified in Section 16161 – Panelboards.

1.02 MEASUREMENT AND PAYMENT

A. No separate payment will be made for work performed under this Section.

1.03 RELATED SECTIONS

A. Specification 16195, Electrical Identification.

1.04 REFERENCES

A. National Electrical Manufacturers Association (NEMA).

1. NEMA KS 1 83 - Enclosed Switches.
2. NEMA 250 85 - Enclosures for Electrical Equipment (1000 Volts Maximum).
3. NEMA FU1 86 - Low Voltage Cartridge Fuses.
4. NEMA AB1 86 - Molded Case Circuit Breakers and Molded Case Switches.

B. National Fire Protection Association (NFPA):

1. NFPA 70 90 - National Electrical Code (NEC).

C. Underwriters Laboratory (UL):

1. UL 98 87 - Enclosed and Dead Front Switches.

2. UL 198C 86 - High-Interrupting Capacity Fuses, Current-Limiting Types. Fifth Edition.

3. UL 198E 88 - Class R Fuses. Fourth Edition.

4. UL 486A 80 - Wire Connectors and Soldering Lugs for Use with Copper Conductors. Seventh Edition.

5. UL 489 86 - Molded-Case Circuit Breakers and Circuit-Breaker Enclosures. Seventh Edition.

6. UL 943 85 - Ground-Fault Circuit Interrupters. Second Edition.

7. UL 977 84 - Fused Power-Circuit Devices. Third Edition.

8. UL 198L 88 - UL Standard for Safety D C Fuses for Industrial Use.

1.05 DEFINITIONS

A. Overcurrent Protective Device (OCPD): Device operative on excessive current that causes and maintains interruption of power in circuit it protects.

B. Ampere-Squared-Seconds: Expression of available thermal energy resulting from current flow. With regard to current-limiting fuses and circuit breakers, ampere-squared-seconds during fault current interruption represents energy allowed to flow before fuse or breaker interrupts fault current within its current limiting range.

1.06 SUBMITTALS

A. Submit all products covered under this specification for Engineer's approval.

B. Shop Drawings:

1. Spare fuse cabinet showing dimensions and features including storage provision for fused cartons, where indicated to be provided in the project documents.

C. Product Data:

1. Product data for fuses, fusible switches, circuit breakers, and OCPD accessories specified in this Section, including descriptive data and time-current curves for protective devices and let through current curves for those with current limiting characteristics.

2. Include coordination charts and tables and related data.

D. Test Results:

1. Certified reports of field tests and observations.

1.07 QUALITY ASSURANCE

A. Items provided under this section shall be listed and labeled by UL or other Nationally Recognized Testing Laboratory (NRTL).

1. Term "NRTL" shall be as defined in OSHA Regulation 1910.7.

2. Terms "listed" and "labeled" shall be as defined in National Electrical Code, Article 100.

B. Regulatory Requirements:

1. Components and Installation:

a. NFPA 70 "National Electrical Code (NEC)."

b. Local codes and ordinances.

C. Single-Source Responsibility: Obtain similar OCPDs from single manufacturer.

D. Coordinate OCPD sizes with characteristics of motors supplied for this project. Pay special attention to high efficiency motors.

1.08 MAINTENANCE

A. Extra Materials:

1. Maintenance Stock, Fuses: For types, voltage, and ampere ratings required, furnish 10% spare fuses, but not less than 1 set of 3 of each kind.

PART 2: PRODUCTS

2.01 OVERCURRENT PROTECTIVE DEVICES (OCPDs), GENERAL

A. General: Provide OCPDs in indicated types, as integral components of panelboards, switchboards, and motor control centers; and also as individually enclosed and mounted single units.

B. Enclosures: NEMA 250.

2.02 GENERAL FUSES

A. General: Provide fuses of types, classes, and current ratings as indicated. Voltage ratings shall be consistent with circuits on which used.

B. Fuses for Direct Current Circuits: UL 198L and marked for such use by manufacturer on fuse label.

C. Cartridge Fuse:

1. Manufacturers:

a. Bussmann Div., Cooper Industries, Inc.

b. Gould Shawmut.

c. Littelfuse Inc.

2. NEMA Standard FU1, unless indicated otherwise, provide nonrenewable cartridge fuses of indicated types, classes, and current ratings that have voltage ratings consistent with circuits on which used.

3. Class CC Fuses: UL 198C.

4. Class J Fuses: UL 198C.

5. Class L Fuses: UL 198C.

a. Current limiting threshold of 10 times current rating or less and time delay of 4 sec at 5 times rating.

6. Class RK1 and RK5 Dual Element Time-Delay Fuses: UL 198E.

7. Class RK1 Fast-Acting Fuses: UL 198E.

2.03 FUSIBLE SWITCHES

A. Acceptable Manufacturers:

1. Eaton

2. Square D Company

B. UL 98 and NEMA KS 1 quick-make, quick-break heavy-duty units.

C. Rating: Load-breaking capacity in excess of normal horsepower rating for switch.

D. Withstand Capability: In excess of let through current permitted by its fuse when subject to faults up to 100,000 RMS symmetrical amperes.

E. Operation: By means of external handle.

F. Interlock: Prevents access to switch interior except when in "off" position.

G. Fuse Clips: Rejection type.

H. Padlocking Provisions: For 2 padlocks, whether open or closed.

I. Enclosure for Switchboard or Panelboard Mounting: Suitable for panel mounting where indicated.

J. Enclosure for Switchboard Mounting: Provide individual mounting where indicated.

K. Enclosure for Independent Mounting: NEMA type as indicated or required to suit environment where located.

2.04 MOLDED CASE CIRCUIT BREAKERS

A. Acceptable Manufacturers:

1. Eaton

2. Square D Company

B. UL 489 and NEMA AB 1.

C. Construction: Bolt in type, except breakers in load-center-type panelboards and breakers 225 ampere frame size and larger may be plug in type if held in place by positive locking device requiring mechanical release for removal.

D. Characteristics: Indicated frame size, trip rating, number of poles, and short-circuit interrupting capacity rating of 35,000 amperes symmetrical, unless greater rating is indicated on Drawings.

E. Tripping Device: Quick-make, quick-break toggle mechanism with inverse-time delay and instantaneous overcurrent trip protection for each pole.

F. Adjustable Instantaneous Trip Devices: Factory adjusted to low-trip-setting current values.

G. Enclosure for Switchboard or Panelboard Mounting: Suitable for panel mounting in switchboard or panelboards where indicated.

H. Enclosure for Switchboard or Motor Control Center Mounting: Provide individual mounting where indicated.

I. Enclosure for Independent Mounting: NEMA type enclosure, as indicated or required to suit environment where located.

2.05 INSULATED CASE CIRCUIT BREAKERS

A. Acceptable Manufacturers:

1. Eaton

2. Square D Company

B. UL 489 and NEMA AB 1.

C. Ratings: Continuous-current, interrupting, and short-time-current ratings, and voltage and frequency ratings as indicated.

D. Operating Mechanism: Mechanically and electrically trip-free, stored-energy operating mechanism with following features:

1. Moving Contacts Closing Speed: Independent of both control and operator.

E. Circuit-Breaker Features and Accessories: Include following:

1. Operating Handle: Provide 1 for each manually operated breaker. No handle ties are permitted.

PART 3: EXECUTION

3.01 INSTALLATION

A. Fuses:

1. Install fuses in fusible devices indicated.

B. Independently Mounted OCPDs:

1. Locate as indicated and install in accordance with manufacturer's written installation instructions.

C. Factory install OCPDs furnished in distribution equipment.

D. Coordinate size overcurrent protective devices with each motor and equipment manufacturer to assure correct size devices and provide accordingly.

3.02 APPLICATION OF FUSES

A. Control Circuits: Class CC, time delay.

B. General Purpose Fusible Switches: Apply following class and types:

1. 30 600 Amperes: Class J or RK1, time delay.

C. Combination Starters: Class J or RK1, time delay.

3.03 IDENTIFICATION

A. Identify with components as specified in Section 16195.

3.04 CONTROL WIRING INSTALLATION

A. Install wiring between OCPDs and control/indication devices as specified in Section 16120 for hard wired connections.

3.05 CONNECTIONS

A. Check connectors, terminals, bus joints, and mountings for tightness.

B. Tighten field-connected connectors and terminals, including screws and bolts, in accordance with equipment manufacturer's published torque tightening values. Where manufacturer's torquing requirements are not indicated, tighten connectors and terminals to comply with tightening torques specified in UL 486A and UL 486B.

3.06 GROUNDING

A. Provide equipment grounding connections for individually mounted OCPD units as indicated and as required by NEC. Tighten connectors to comply with tightening torques specified in UL Standard 486A to assure permanent and effective grounding.

B. Ground in accordance with Section 16170.

3.07 FIELD QUALITY CONTROL

A. Manufacturer's Field Services:

1. Supplier's or manufacturer's technician for equipment specified herein shall be present at job site or classroom designated by Owner for minimum of ½ workday, travel time excluded, for assistance during plant construction, plant startup, equipment adjustment, and training of Owner's personnel for plant operation. Include minimum of:

   a. 1/2 manday for Instructional Services.

   b. Supplier or manufacturer shall direct services to specific system and equipment operation, maintenance, and troubleshooting.

B. Testing:

1. Reports: Prepare certified written reports on tests and observations. Report defective materials and workmanship and unsatisfactory test results.

2. Pretesting: Upon completing installation of system, perform following preparations for tests:

   a. Make insulation resistance tests of OCPD buses, components, and connecting supply, feeder, and control circuits.

   b. Make continuity tests of circuits.

   c. Include full updating on final system configuration and parameters where they supplement or differ from those indicated in original Contract Documents.

   d. Comply with manufacturer's instructions for installation and testing of OCPDs.

3. Visual and mechanical inspection: Include following inspections and related work.

   a. Overcurrent-Protective-Device Ratings and Settings: Verify indicated ratings and settings to be appropriate for final system arrangement and parameters. Where discrepancies are found, test organization shall recommend final protective device ratings and settings. Use accepted revised ratings or settings to make final system adjustments.

   b. Inspect for defects and physical damage, NRTL labeling, and nameplate compliance with current single line diagram.

c. Exercise and perform operational tests of mechanical components and other operable devices in accordance with manufacturer's instruction manual.

d. Check tightness of electrical connections of OCPDs with calibrated torque wrench. Refer to manufacturer's instructions for proper torque values.

e. Clean OCPDs using manufacturer's approved methods and materials.

f. Verify installation of proper fuse types and ratings in fusible OCPDs.

3.08 CLEANING

A. Upon completion of installation, inspect OCPDs. Remove paint splatters and other spots, dirt, and debris. Touch up scratches and mars of finish to match original finish.

END OF SECTION

Section 16476

DISCONNECTS AND CIRCUIT BREAKERS

PART 1: GENERAL

1.01 SUMMARY

A. Section Includes:

1. Service disconnects.
2. Feeder and equipment disconnects.
3. Enclosed circuit breakers.

1.02 MEASUREMENT AND PAYMENT

A. No separate payment will be made for work performed under this Section.

1.03 RELATED SECTIONS

A. Specification 16195, Electrical Identification.

1.04 SUBMITTALS

A. Submit the following for Engineer's approval.

B. Product Data:

1. Submit for switches, circuit breakers, and accessories.
2. Descriptive data and time current curves for protective devices and let through current curves for those devices with current limiting characteristics. Include coordination charts and tables, and related data.

C. Shop Drawings:

1. Wiring diagrams detailing power and control wiring and differentiating clearly between manufacturers installed wiring and field installed wiring.

D. Test Results:

1. Field test reports indicating and interpreting test results.

E. Operating and Maintenance Data:

1. Maintenance data for tripping devices.

1.05 QUALITY ASSURANCE

A. Items provided under this section shall be listed or labeled by UL or other Nationally Recognized Testing Laboratory (NRTL).

1. Term "NRTL" shall be as defined in OSHA Regulation 1910.7.

2. Terms "listed" and "labeled" shall be as defined in National Electrical Code, Article 100.

B. Regulatory Requirements:

1. National Electrical Code (NEC): Components and installation shall comply with National Fire Protection Association (NFPA) 70.

C. Single Source Responsibility: Enclosed switches and circuit breakers shall be product of a single manufacturer.

PART 2: PRODUCTS

2.01 MANUFACTURERS

A. Fusible Switches

1. Eaton

2. Square D

B. Molded Case Circuit Breakers:

1. Eaton

2. Square D Company

2.02 ENCLOSED SWITCHES

A. Enclosed Non-fusible Switch: NEMA KS 1, Type HD handle lockable with 2 padlocks.

B. Enclosed Fusible Switch, 800 Amperes and Smaller: NEMA KS 1, Type HD, clips to

accommodate specified fuses, enclosure consistent with environment where located, handle lockable with 2 padlocks, and interlocked with cover in CLOSED position.

2.03 ENCLOSED CIRCUIT BREAKERS

A. Enclosed Molded Case Circuit Breaker: NEMA AB 1, handle lockable with 2 padlocks.

B. Characteristics:

1. Frame size, trip rating, number of poles, and auxiliary devices as indicated

2. Interrupting capacity rating to meet available fault current indicated on the one line diagrams. The minimum rating shall be 35,000 symmetrical rms amperes.

3. Appropriate application listing when used for switching fluorescent lighting loads or heating, air conditioning, and refrigeration equipment.

PART 3: EXECUTION

3.01 INSTALLATION

A. Install enclosed switches and circuit breakers in locations as indicated, according to manufacturer's written instructions.

B. Install enclosed switches and circuit breakers level and plumb.

C. Install wiring between enclosed switches and circuit breakers and control/indication devices.

D. Connect enclosed switches and circuit breakers and components to wiring system and to ground as indicated and instructed by manufacturer. Tighten connectors and terminals, including screws and bolts according to equipment manufacturer's published torque tightening values for equipment connectors. Where manufacturer's torqueing requirements are not indicated, tighten connectors and terminals according to tightening torques specified in UL Standard 486A.

3.02 FIELD QUALITY CONTROL

A. Manufacturer's Field Services:

1. Supplier's or manufacturer's representative for equipment specified herein shall be present at job site or for assistance during plant construction, plant startup, and training of Owner's personnel for plant operation.

B. Testing: After installing enclosed switches and circuit breakers and after electrical circuitry has been energized, demonstrate product capability and compliance with requirements.

1. Procedures: Perform each visual and mechanical inspection and electrical test stated in NETA Standard ATS, Section 7.5 for enclosed switches and Section 7.6 for molded case circuit breakers. Certify compliance with test parameters.

2. Correct malfunctioning units at site, where possible, and retest to demonstrate compliance; otherwise, remove and replace with new units, and retest.

3.03 ADJUSTING

A. Set field adjustable enclosed switches and circuit breaker trip ranges as indicated.

3.04 CLEANING

A. After completing system installation, including outlet fittings and devices, inspect exposed finish. Remove burrs, dirt, and construction debris and repair damaged finish including chips, scratches, and abrasions.

END OF SECTION

Section 16480

MOTOR CONTROL CENTER

PART 1: GENERAL

1.01 SECTION INCLUDES

A. Specification for low voltage motor control center (MCC).

1.02 MEASUREMENT AND PAYMENT

A. No separate payment will be made under this section. Include the cost for this work in the lump sum base bid.

1.03 REFERENCES

A. American National Standards Institute/National Electrical Manufacturers Association (ANSI/NEMA)

1. ICS 1: General Standards for Industrial Control and Systems
2. ICS 2: Industrial Control Devices, Controllers and Assemblies
3. ICS 4: Terminal Blocks for Industrial Use

B. American National Standards Institute/Underwriters Laboratories, Inc. (ANSI/UL)

1. 467: UL Standard for Safety, Grounding and Bonding Equipment
2. 489: UL Standard for Safety, Molded-Case Circuit Breakers and Circuit-Breaker Enclosures
3. 506: UL Standard for Safety, Specialty Transformers
4. 845: UL Standard for Safety, Motor Control Centers

C. American National Standards Institute/National Fire Protection Association (ANSI/NFPA): 70 National Electrical Code (NEC).

1.04 SUBMITTALS

A. Submit the following under the provisions of Section 01330 – Submittal Procedures:

1. Outline drawings with elevations
2. Equipment arrangement drawings
3. Anchor bolt location drawings
4. Electrical schematics and wiring diagrams
5. Current, potential, and power transformer curves
6. Electrical fuse/circuit breaker characteristic
7. Equipment performance curves and data
8. Bill of installation/assembly materials
9. Equipment weights
10. Completed manufacturer's data sheets
11. Catalog data
12. Assembly/disassembly sizes and weights
13. Nameplate data
14. Performance/acceptance test report
15. Operation and maintenance data

1.05 QUALITY ASSURANCE

A. Tests. Perform tests in accordance with ANSI/NEMA ICS 2-322.22. Test each MCC as described in ANSI/UL 845. Make available upon request certified temperature and short circuit test data, and a certificate of circuit breaker conformance with ANSI C37.16. Have tests and inspections performed and evaluated by qualified personnel. Document and correct deficiencies observed during the testing process prior to shipment.

1.06 DELIVERY, STORAGE AND HANDLING

A. Upon completion of the manufacture and assembly of the MCC and before crating for shipment, have parts that are disassembled match marked to facilitate installation in the field. Pack and crate parts in such a way to permit ease of handling.

B. Equip MCC shipping sections with lifting facilities so that may be easily unloaded and handled, either by crane or forklift.

C. Do not exceed 120 inches in length for shipping sections. Have equipment packed, crated, and rigidly braced to protect it from damage during shipment, handling, and outdoor storage. Make provision to energize the space heater of each shipping section during storage at the jobsite. Make a connection point readily available without uncrating the equipment and clearly tag each shipping section to locate the connection and identify the electrical service required.

PART 2: PRODUCTS

2.01 ACCEPTABLE MANUFACTURERS

A. Eaton

B. Schneider/Square D Company

2.02 MATERIALS AND EQUIPMENT

A. Design. Provide an MCC with the following design characteristics:

1. The MCC construction and wiring shall be NEMA Class I, Type B as specified in ANSI/NEMA ICS-2-322.08 and ICS-2-322.10. Provide an MCC designed for 3 phase, 60 Hz, 480-Volt service with main horizontal and vertical bus ampacities and short circuit bracing as specified on the one line diagram.

2. Furnish an MCC designed to operate in service conditions described in NEMA ICS 1 and as shown on the one line diagram.

3. Supply motor starters suitable for full voltage starting unless otherwise noted on the one-line diagram.

4. Construct the MCC of one or more vertical sections bolted together to form a free standing assembly, designed to permit future additions, changes, or regrouping of units.

5. Provide motor control units of the combination type, consisting of a motor circuit protector (MCP), a magnetic starter and a control power transformer. Size the MCP and starter in accordance with manufacturer's recommendation for the starter and motor size indicated on the one line diagram.

6. When power factor correction capacitor is called for, connect its wiring to the line side of the overload relay with a set of fuses, a circuit breaker, or other acceptable means to serve as overload protection for the wiring and capacitor.

7. Manufacture main breaker (if used) and feeder breakers of the molded case, thermal-magnetic type to be mounted and wired in accordance with ANSI/UL 489.

8. If called for on the one line diagram, locate the panelboard, transformer and transformer feeder breaker in the same vertical section. Supply a transformer with 115 degrees C temperature rise, installed in accordance with ANSI/UL 506.

B. Construction. Construct the MCC of self supporting and fully enclosed metal clad section for mounting of motor starters, circuit breakers and necessary accessories including bus bars, control transformers, control switches, ground bus, and control wiring, as specified in this section and shown on the one-line diagram.

C. Enclosures

1. Construct each MCC enclosure to be fully metal enclosed, dead front, free standing, and NEMA 1 suitable for indoor service as defined in ANSI/UL 845 or NEMA 3R suitable for outdoor installation when indicated on the one line diagram. Fabricate enclosure of sheet steel not less than 14 gauge with rear and end covers not less than 16 gauge; with adequate strength to withstand stresses imposed by short circuit current, shipping, handling, installation, and operation, without distortion or damage.

1. Construct frames of the enclosure structure with continuous steel barriers, extending from the front to the rear of each compartment for the controller units, buses and power cables.

2. Provide enclosures of suitable size for reduced voltage starting auto transformers and associated wiring, if required.

D. Vertical Sections

1. Make the structure 20 inches deep. Nominal vertical section dimensions are 20 inches wide by 90 inches high. Design each vertical section to accommodate not more than six NEMA Size 1 combination motor control units mounted one above the other in front-mounted arrangement.

2. Provided horizontal wiring space at the top and the bottom of each vertical section, which will line up with adjacent sections to form continuous raceways through the entire length of the MCC. In addition, in standard sections include vertical wireways with hinged doors for unit wiring. Provide grommets at points wiring must cross cut-outs.

3. Use section structure designed for top or bottom cable entry as indicated on the one-line diagram. Provide adequate ventilation and heating facilities for each section to keep the maximum temperature rise and humidity within the acceptable limits.

E. Incoming Feed

1. Terminate incoming feeder cables in a main breaker or main lugs. Use top feed to main breakers whether either top or bottom MCC cable entry is specified.

2. The MCC will be fed from one 480V source, unless otherwise stated. Provide the necessary space for adequate bending radius and spreading room to properly train and terminate the cables specified on the Drawings. Where large (350 MCM and above) or parallel cables are used as feeders, provide a separate termination compartment along side the main breaker for cable entry.

3. Provide a separate compartment with a hinged front access door and suitable space for terminations for incoming cables. Provide compression type lugs in the quantity shown on the diagram. Allow space for a cable bending radius not less than ten times the diameter of the cable. The cable size is shown on the one-line diagram. Install current transformers and phase monitor coils in this compartment on fixed horizontal mounting brackets. Do not loosely place coils around feeder cables.

4. Furnish a surge protective device (SPD) rated 300 kA per phase and 150 kA per mode. Locate the SPD in an isolated, completely enclosed cubicle.

5. When shown on the one line diagram, install a voltmeter and an ampere-meter with switches in the incoming feed section. Provide meters of the switchboard type with one percent accuracy, 4-1/2 inch diameter face with a minimum of 240 degree direct reading scale.

F. Combination Starter Unit (Where Indicated On One-Line Diagram)

1. Provide a standard combination motor starter unit which consists of a motor circuit protector (MCP), a magnetic motor starter, and an overload relay. Install starter and circuit protective device and control power transformer in a plug-in unit. The ratings of the components are shown on the one-line diagram.

2. Provide motor starters conforming to NEMA standards for the horsepower of the motors with which they are to be used and which are suitable for full voltage, across-

the-line starting. Select starters with pickup and dropout voltages of not greater than 85 percent and 60 percent of rated voltage, respectively. Do not use a starter smaller than NEMA Size 1.

3. For NEMA size 4 and larger, provide vacuum-type contactors.

4. Select overload relays designed so that any attempt for reset immediately after operation cannot result in damage to the unit. Provide running protection for the motor and all other series components, based upon the tripping characteristics of the overload relay.

5. Utilize motor overload relays of the solid state type with adjustable overload, phase unbalance and phase failure sensitivity.

6. Starters shall have a minimum of one NC and one NO auxiliary contacts in addition to the seal-in contact.

7. Have reversing contactors and 2-speed starters both mechanically and electrically interlocked to prevent both contactors from being engaged at one time.

8. Provide an MCP of the magnetic type with a fault interrupting capability suitable for the complete starter unit.

9. Provide each combination starter unit with its own control power transformer with Class B insulation and 120 volt secondary.

10. Place fuses on the secondary side of control power transformers with one dual element fuse. Have control transformers separately fused on the primary side with two dual element fuses.

11. Unless otherwise called for on the one-line diagram, the minimum rating of the control power transformer, for the various sizes of starters, shall be as follows:

NEMA Size 1	75 VA
NEMA Size 2	150 VA
NEMA Size 3	250 VA
NEMA Size 4	500 VA

12. Connect the control power transformer so that it is de-energized when the circuit breaker is opened.

G. Reduced Voltage Soft Starters (RVSS) - (Where Indicated On One Line Diagram)

1. Provide severe duty reduced voltage solid state soft starters where indicated on the one line diagram by the designation RVSS. Provide RVSS keypads mounted on the MCC bucket door so the units can be programmed without opening the bucket door.

2. Provide motor circuit protectors (MCPs) for instantaneous protection of RVSS units.

H. Terminal Blocks

1. Provide terminal blocks conforming to NEMA/ANSI ICS 4 type rated 600 volts, with screw type terminals to accommodate non-insulated ring tongue wire lugs for No. 18 through No. 10 size wire for field connection.

2. Use a sufficient number of terminal blocks so circuits for 480-volt and 120-volt service can be wired to a separate group of terminal blocks, making power and control circuit readily identified for safety during maintenance.

3. Wire auxiliary contacts to terminal blocks.

I. Units

1. Equip each unit compartment with barriers to isolate it from adjacent devices in the control center and prevent communication of faults from one compartment to another.

2. Provide draw-out type units. Provide means in the vertical section for supporting and aligning units during their removal or replacement.

3. Install an individual front door on each unit compartment. Make each door interlocking with the circuit disconnect so that the door may not be opened while the circuit disconnect is in a closed position. Provide a means for overriding this interlock.

4. Use padlocking arrangements that permit locking circuit disconnect in the open position with a minimum of three padlocks when the door is closed.

5. Arrange components so that removal of a starter or breaker unit does not require removal of its door, or the removal of an adjacent unit.

6. Place unit wiring diagrams in the print pocket on the inside of each unit door.

7. Furnish units designated as future or spare complete with guide rails, separator bars, doors, and operating hardware required to permit completion of the unit by the addition of a combination starter or feeder breaker unit.

8. For any unused space that is not suitable for the addition of a plug-in unit, fabricate and install a plain bolted sheet metal cover.

9. Identify electrical components, such as relays, breakers, terminal strips, and starters, with laminated nameplates as required in Section 16195.

10. Each motor starter door shall have a laminated nameplate duplicating the motor's nameplate rating information. At a minimum the motor nameplate information should include: HP, Phase, Hertz, Enclosure type, frame, code, RPM, volts, Amps, insulation class, max amb., duty cont., service factor, bearings, serial or ID number, P/N or Model number, and manufacturer.

J. Buses and Connections

1. Extend the main horizontal copper bus across the assembly to form a complete continuous bus. Support it in at least two places in each vertical section using glass-reinforced, polyester-type insulators which are impervious to moisture and adverse atmospheric conditions.

2. Fabricate buses from tin plated copper bars. Use buses designed to operate at individual rate full load current without exceeding a 50 degrees C temperature rise at 40 degrees C ambient temperature as defined in ANSI/UL 845. The continuous current rating of the main and branch buses shall be as stated on the one-line diagram.

3. Bolt connections to main and branch buses. Make joints and contact surfaces free of burrs and irregularities.

4. Provide tin-plated, compression-type cable connectors (NEMA 2-hole) for each bus bar in the main feed cubicle. Select connectors of adequate size and quantity for the feeder cables.

5. Make provision for extension in both directions for future sections.

6. Install both main and branch buses so they are phased in the order A-B-C from front-to-rear, top-to-bottom, and left-to-right as viewed from the front of the MCC.

7. Have a copper ground bus extend the full length of the MCC near the bottom, with provision for extension into future sections. It shall be amp rated at a minimum of 25 percent of horizontal power bus. Provide compression lugs on each end of the ground bus for connection of the grounding copper conductor. Permanently ground the non-current carrying metal parts of equipment within each MCC through the ground bus in accordance with ANSI/UL 467. Terminate ground cables to the ground bus by means of the connectors.

K. Wireways and Wiring

1. Provide each section with horizontal wiring space at both the top and bottom. Make wiring spaces line up with adjacent sections to form a continuous wireway for the entire length of the MCC.

2. In addition, provide each section with a wireway space at least 4 inches wide between the units and side unit wiring. Secure the wireway with a tight fitting hinged access door of formed sheet metal. Furnish wire straps in the vertical wireway to group individual conductors. Tie wires securely in place for a neat, orderly installation.

3. Completely enclose both horizontal and vertical wireways and isolate them from exposure to any live parts.

4. Use control wiring that is a minimum No. 14-AWG copper, 600 volts, Type TA, TBS or SIS as defined in ANSI C37.30.6.

5. For current transformer wiring, use No. 10 AWG copper which is otherwise, the same as control wiring.

6. Power and control cables may enter the MCC only at bottom. Provide suitable opening in bottom of MCC for cable entry. Collect power and control cables neatly in separate bundles.

7. Make wires continuous between terminals and other connections, without splices.

8. Identify wiring at both ends with same number, machine printed on heat shrink type sleeves as specified in Section 16195 - Electrical Identification.

L. Control Devices

1. Provide pushbuttons, selector switches and indicating lights which are of the oil tight, heavy duty type with industrial application quality.

2. Provide indicating lights which are push-to-test LED type with transformer and 100,000 hour lamp life.

M. Space Heaters: Install thermostat controlled electric space heaters to prevent condensation of moisture in the control centers. The rated voltage of these heaters shall be double the voltage applied. Make thermostats adjustable, and set to cut out when the temperature rises to an ambient of 30 degrees C (240 volt rated space heaters operated on 120 volt which power is derived from a local panelboard).

N. Nameplates

1. Use engraved phenolic with black lettering and white background for nameplates on individual units as well as the main nameplate for the assembly.

2. Make MCC compartment nameplates 1" x 3" with approximately 1/4 inch high lettering. Make MCC main nameplates 8" x 2" with 1 inch high lettering. Secure nameplates with self tapping stainless steel metal screws.

3. Provide a blank nameplate for spare compartments.

4. Word nameplate captions as indicated on the one-line diagram.

5. Label all components in the MCC with phenolic nameplates as required in Section 16195.

O. Finish

1. Thoroughly clean the inside and outside of the MCC of foreign matter, excessive oxide, scale, weld spatter, and flux. Repair fabricating scars and rough edges by welding and grinding before painting, followed by heat treatment, if required by the governing code or standard.

2. Give a finish coat of manufacturer's standard enamel for compartment doors, cover plates, and structural parts of the MCC. Do not apply paint or filler until repairs, tests, and final shop inspection are completed.

PART 3: EXECUTION

3.01 PREPARATION

A. Verify dimension of the housekeeping pad and the embedded leveling channels and conduit stub-ups.

3.02 INSTALLATION

A. Install the motor control center in accordance with the manufacturer's published instructions.

B. Torque bus bar bolts to manufacturer's recommendations and tighten nuts and bolts on the steel structure to ensure structural integrity.

C. Adjust the magnetic setting on motor circuit protectors in accordance with motor inrush currents (nameplate data).

D. Select and install motor starter overload relay heater coils based on motor nameplate data.

E. Select and program all settings for RVSS units.

F. Touch up scratches and verify data on nameplates.

G. Install warning labels on Motor Control Centers as required in Section 16195, 2.02, F.

3.03 GE MULTILIN RELAY SETTINGS

A. GE Multilin Relay settings are required to be developed and set as indicated in Specification 16171, Low Voltage Motors. Coordinate with the low voltage motor vendor for GE Multilin Relays to be set.

END OF SECTION

Section 16481

MOTOR CONTROLLERS

PART 1: GENERAL

1.01 SUMMARY

A. Section Includes:

1. AC motor controllers rated 600 volts and below.

B. Overcurrent protective devices and disconnect switches used with motor controllers are specified in Sections 16475 and 16476.

1.02 MEASUREMENT AND PAYMENT

A. No separate payment will be made for work performed under this Section.

1.03 RELATED SECTIONS

A. Specification 16195, Electrical Identification.

1.04 DEFINITIONS

A. Motor Controller: Device that controls, protects, and energizes electric motor, and where required, controls its speed or torque or power delivered by it.

1.05 SUBMITTALS

A. Submit all products covered under this section for Engineer's approval.

1. Product Data:

a. Include dimensions, ratings, and data on features and components.

2. Test Results:

a. Certified reports of field tests and observations.

3. Miscellaneous:

a. Load Current and Overload Relay Heater List: Compiled by Contractor after motors have been installed. Arrange list to demonstrate selection of heaters to suit actual motor nameplate full load currents.

4. Operation and Maintenance (O&M) Data:

a. Manufacturer's data on maintenance and operation of equipment.

1.06 QUALITY ASSURANCE

A. Single-Source Responsibility: Obtain similar motor-control devices from single manufacturer.

B. Manufacturer Qualifications:

1. Provide controllers from manufacturers regularly engaged in manufacture of equipment of types and capacities indicated, with such products in satisfactory use in similar service for not less than 5 yrs.

C. Items provided under this section shall be listed or labeled by UL or other Nationally Recognized Testing Laboratory (NRTL).

1. Term "NRTL" shall be as defined in OSHA Regulation 1910.7.

2. Terms "listed" and "labeled" shall be as defined in National Electrical Code (NEC), Article 100.

D. Regulatory Requirements:

1. National Electrical Code (NEC): Components and installation shall comply with National Fire Protection Association (NFPA) No. 70.

1.07 COORDINATION

A. Coordinate features of controllers and control devices with pilot devices and control circuits provided under other sections of Specifications covering control systems.

B. Coordinate motor controls, starters and overcurrent devices with motor manufacturer's data. Provide motor manufacturer's data sheets to motor control manufacturer at time of order.

1.08 MAINTENANCE

A. Extra Materials:

1. Spare Fuses and Indicating Lamps: Furnish one spare for every 5 installed units, but not less than one set of 3 of each kind.

PART 2: PRODUCTS

2.01 ACCEPTABLE MANUFACTURERS

A. Manual and Magnetic Motor Controllers:

1. Eaton

2. Square D Company

2.02 MOTOR CONTROLLERS, GENERAL

A. Coordinate features of each motor controller with ratings and characteristics of supply circuit, motor, required control sequence, duty cycle of motor, drive, and load, and pilot device, and control circuit affecting controller functions. Provide controllers horsepower rated to suit motor controlled.

B. NEMA Size 1 minimum.

C. Contacts shall open each ungrounded connection to motor.

D. Overload Relays:

1. Ambient-compensated type with inverse-time-current characteristic.

2. Provide with heaters or sensors in each phase matched to nameplate full load current of specific motor to which connected with appropriate adjustment for duty cycle. Overload devices to require manual reset after tripping occurs.

3. Enhanced Protection Overload Relay: Provide overload relays with NEMA Class 10 tripping characteristics for submersible equipment or where indicated on the contract drawings. Select to protect motor against voltage unbalance and single phasing.

E. Enclosures:

1. For individually mounted motor controllers and control devices, comply with NEMA 250.

2. Provide enclosures suitable for environmental conditions at controller location.

3. Provide NEMA Type enclosures as indicated or required to suit environment where located.

2.03 MANUAL MOTOR CONTROLLERS

A. Quick-make, quick-break toggle action.

B. Doublebreak silver alloy contacts.

C. Pilot light.

D. Padlocking provision.

2.04 MAGNETIC MOTOR CONTROLLERS

A. Full voltage, non-reversing, across-the-line, magnetic controller, except where another type indicated.

B. Control Circuit: 120V. Control power transformer integral with controller where no other supply of 120 v control power to controller indicated. Control power transformer with adequate capacity to operate connected pilot, indicating and control devices, plus 100% spare capacity.

C. Combination Controller: Motor circuit protector; molded case circuit breaker type with magnetic only trip element calibrated to coordinate with actual locked rotor current of connected motor and controller overload relays. Provide breakers factory-assembled with controller, interlocked with unit cover or door, and arranged to disconnect controller. Provide motor circuit protectors with field-adjustable trip elements.

2.05 AUXILIARY CONTROL DEVICES

A. General: Furnish auxiliary control device as shown on one line diagrams, Drawings, or as specified. Factory-install in controller enclosure except as otherwise indicated.

B. Pushbutton Stations, Pilot Lights, and Selector Switches: Heavy duty type.

C. Stop Pushbutton Station: Momentary break pushbutton station with factory-applied hasp arranged so padlock can be used to lock pushbutton in depressed position with control circuit open.

D. Lockout Pushbutton Station: Maintained contact red mushroom pushbutton station with factory-applied hasp arranged so padlock can be used to lock pushbutton in depressed position with control circuit open.

E. Control Relays: Heavy duty industrial type auxiliary and adjustable time-delay relays.

F. Elapsed Time Meters: Heavy duty with digital readout in hrs.

G. Current Sensors: Rated to suit application.

H. Pilot Lights: High intensity LED type.

PART 3: EXECUTION

3.01 INSTALLATION

A. General: Install motor controllers and auxiliary motor control devices in accordance with manufacturer's written instructions and approved submittals.

B. Mounting:

1. For control equipment at walls, bolt single units to wall. Mount multiple units on light-weight structural steel channels bolted to wall.

2. For controllers not at walls, provide freestanding racks fabricated of structural steel members and light-weight slotted structural steel channels. Use feet consisting of 3/8 in. thick steel plates, 6 in. square, bolted to floor. Use feet for welded attachment of 1 1/2-in. by 1-1/2-in. by 1/4-in. vertical angle posts not over 3 ft oc. Connect posts with horizontal lightweight slotted steel channels and bolt control equipment to channels.

3. Unless shown otherwise on plans.

C. Motor Controller Fuses and Circuit Breakers: Conform to requirements of Section 16475 and 16476.

3.02 IDENTIFICATION

A. Comply with Section 16195.

3.03 CONTROL WIRING INSTALLATION

A. Install wiring as specified in Section 16120.

B. Install wiring in enclosures bundled, trained, and supported.

3.04 CONNECTIONS

A. Tighten connectors, terminals, and mountings. Tighten field connected connectors and terminals, including screws and bolts, in accordance with equipment manufacturer's

published torque tightening values. Where manufacturer's torquing requirements not indicated, comply with tightening torques specified in UL 486A and 486B.

3.05 FIELD QUALITY CONTROL

A. Manufacturer's Field Services:

1. Supplier's or manufacturer's technician for equipment specified herein shall be present at job site or classroom designated by Owner for minimum mandays indicated, travel time excluded, for equipment adjustment, and training of Owner's personnel for plant operation. Include minimum of:

   a. 1/2 manday for Instructional Services.

B. Testing:

1. Reports: Notify Engineer in writing indicating defective materials and workmanship and unsatisfactory test results. Include records of repairs and adjustments made.

2. On completing installation of system, perform following tests.

   a. Make insulation resistance tests of conducting parts of motor control components; and of connecting supply, feeder, and control circuits. For devices containing solid-state components, use test equipment and methods recommended by manufacturer.

   b. Make continuity tests of circuits.

   c. Review updating of final system configuration and parameters where they supplement or differ from those indicated in original Contract Documents.

   d. Review manufacturer's written instructions for installation and testing of motor control devices.

3. Visual and Mechanical Inspection: Include following inspections and related work.

   a. Motor Control Device Ratings and Settings: Verify ratings and settings as installed are appropriate for final loads and final system arrangement and parameters. Recommend final protective device ratings and settings where differences found. Use accepted revised ratings or settings to make final system adjustments.

   b. Inspect for defects and physical damage and nameplate compliance with Drawings.

c. Exercise and perform operational tests of mechanical components and other operable devices in accordance with manufacturer's written instructions.

d. Check tightness of electrical connections of devices with calibrated torque wrench. Use manufacturer's recommended torque values.

e. Clean devices using manufacturer's approved methods and materials.

f. Verify proper fuse types and ratings in fusible devices.

4. Electrical Tests: Perform following in accordance with manufacturer's written instructions.

a. Insulation resistance test of motor control devices conducting parts to extent permitted by manufacturer's written instructions. Insulation resistance less than 100 megohms is not acceptable.

b. Use primary current injection to check performance characteristics of motor circuit protectors and for overload relays of controllers for motors 15 hp and larger. Trip characteristics not within manufacturer's published time-current tolerances not acceptable.

c. Make adjustments for final settings of adjustable trip devices.

d. Test auxiliary protective features such as loss of phase, phase unbalance, and undervoltage to verify operation.

e. Check for improper voltages at terminals in controllers having external control wiring when controller disconnect opened. Voltage over 30V is unacceptable.

5. Correct deficiencies and retest motor control devices. Verify by system tests that specified requirements are met.

3.06 CLEANING

A. Remove paint splatters and other spots, dirt, and debris. Touch up scratches and mars of finish to match original finish. Clean devices internally using manufacturer's recommended methods and materials.

END OF SECTION

Section 16484

MEDIUM VOLTAGE MOTOR CONTROLLER SWTICHGEAR

PART 1: GENERAL

1.01 SCOPE

A. The Contractor shall furnish and install medium voltage motor controller switchgear with roll-out vacuum contactors and other features as specified herein and as shown on the Contract Drawings.

1.02 MEASUREMENT AND PAYMENT

A. No separate payment will be provided for work performed under this Section. Include the cost for this work in the lump sum base bid.

B. Refer to Section 01270 – Measurement and Payment.

1.03 RELATED SECTIONS

A. Section 16172 - Medium Voltage Motors

B. Section 16195 - Electrical Identification

1.04 REFERENCES

A. Medium voltage motor controller switchgear shall be designed, manufactured, assembled, and tested in accordance with the following standards:

1. ANSI/NEMA ICS-3-Part 2

2. UL 347

1.05 SUBMITTALS (FOR REVIEW/APPROVAL)

A. The following information shall be submitted:

1. Master drawing index

2. Front view elevation

3. Floor plan

4. Top view
5. Single line
6. Schematic diagram
7. Nameplate schedule
8. Component list
9. Conduit entry/exit locations
10. Assembly ratings including:
    a. Short-circuit rating
    b. Voltage
    c. Continuous current
    d. Basic impulse level
11. Major component ratings including:
    a. Voltage
    b. Continuous current
    c. Interrupting ratings
12. Cable terminal sizes
13. Descriptive bulletins
14. Product data sheets.
15. Connection details between close-coupled assemblies
16. Composite floor plan of close-coupled assemblies

1.06 SUBMITTALS (FOR RECORD PURPOSES)

A. The following information shall be submitted for record purposes:

1. Final as-built drawings and information for items listed in paragraph 1.05 above

2. Wiring diagrams

3. Certified production test reports

4. Installation information, including equipment anchorage provisions

B. The final (as-built) drawings shall include the same drawings as the construction drawings and shall incorporate all changes made during the manufacturing process.

1.07 QUALIFICATIONS

A. The manufacturer of the assembly shall be the manufacturer of the major components within the assembly.

B. For the equipment specified herein, the manufacturer shall be ISO 9001 or 9002 certified.

C. The manufacturer of this equipment shall have produced similar electrical equipment for a minimum period of ten (10) years. When requested by the City Engineer, an acceptable list of installations with similar equipment shall be provided demonstrating compliance with this requirement.

1.08 DELIVERY, STORAGE AND HANDLING

A. Equipment shall be handled and stored in accordance with manufacturer's instructions. One (1) copy of these instructions shall be included with the equipment at time of shipment.

1.09 OPERATION AND MAINTENANCE MANUALS

A. Equipment operation and maintenance manuals shall be provided with each assembly shipped, and shall include instruction leaflets and instruction bulletins for the complete assembly and each major component.

PART 2: PRODUCTS

2.01 MANUFACTURERS

A. Eaton

B. Approved Equal

C. The listing of a specific manufacturer above does not imply acceptance of products that do not meet the specified ratings, features and functions. Manufacturer listed above is not relieved from meeting these specifications in their entirety. A request for acceptance as an approved equal manufacturer shall be submitted 21 days prior to bid day so the manufacturer can be evaluated. A manufacturer requesting acceptance as an approved equal must match the configuration and features of the specified manufacturer.

2.02 RATINGS

A. Starters shall have an integrated interrupting rating with current limiting fuses of 200 MVA.

B. When starters are grouped together in a lineup, the entire assembly shall be suitable for application on a power system having a short-circuit capacity of 200 MVA.

C. Controllers shall have vacuum contactor(s) with the following ratings:

	400 Amp
Max. Design Voltage	2.5 kV
Nominal Operating Voltage	2.4 kV
Max. Interrupting Current (3 Operations)	8500 Amps
Rated Current -- Enclosed	360 Amps
Rated Current -- Open	400 Amps
Chop Current	0.3 Amps Avg.
Short-Time Current	
30 Sec.	2400A
1 Sec.	6000A
8.7 mSec. (0.5 Cycle)	63 kA Peak
Mechanical Life	2.5 Million
Electrical Life at rated current	300,000 Operations
Impulse Withstand	60 kV (1.2 x 50 Micro Sec.)
Closing Time (Energization to Armature Seal-In)	80 Milliseconds (3.5 Cycles)

D. Reduced Voltage Solid-State Soft Starters shall have the following ratings:

Description	Specification
Horsepower	Hp as shown on the drawings
Power Ratings	500% FLA for 30 Sec. 125% Continuous
PIV Ratings	2400VAC: 8000V 4200VAC: 12000V
Starting Torque	0 to 100%
Ramp Time	0 to 120 Seconds

Description	Specification
Maximum Voltage Rating	4800VAC
Nominal Ratings	2300VAC: 3300 VAC 4160VAC: 4800 VAC
Standard Insulation Test	2400VAC: 7.625 kV 4200VAC: 13.25 kV
Rated Short Circuit Amperes	50 kV rms Sym.
SCR Voltage Drop or Voltage Drop "L" to "T"	3.5V without bypass/<1V with bypass
Overall Efficiency	99.7% without bypass/99.94 with bypass
SCR Firing Technique	Hard drive with "picket fence"
Transient Protection	DV/DT Circuits/Phase
Diagnostic LEDs	Power On Micro Computer Fault SCR Gate Drive Power Shorted SCR
Under Voltage Protection	80% Pickup 60% Dropout
Control Input	120V AC or Dry Contact, 2 or 3 wire

2.03 CONSTRUCTION

A. Isolating switch and contactor assemblies, including current limiting fuses, shall be of the component-to-component design without any interconnecting cables or flexible shunts. The isolating switch shall be easily removed from the front of the enclosure by loosening two bolts. Line and load cable terminations shall be completely accessible from the front.

B. The isolating switch shall be an externally operated manual three-pole draw-out type, such that in the open position it completely grounds and isolates the starter from the line connectors with a mechanically driven isolating shutter leaving no exposed high-voltage components. Integral mechanical interlocks shall prevent entry into the high-voltage areas while the starter is energized and shall block accidental opening or closing of the isolating switch when the door is open or the contactor is closed. The isolating switch handle shall have provisions for three (3) padlocks in the off position.

C. Current limiting power fuses shall be of the self-protecting type with visible fuse condition indicators. The fuses shall incorporate special time/current characteristics for motor service allowing proper coordination with the contactor and overload relay for maximum motor protection. This coordination shall be such that under a low-fault condition the interrupting rating and drop-out time of the contactor shall be properly coordinated with all possible fuse sizes to eliminate contactor racing. The power fuses shall be vertically mounted permitting easy inspection and replacement without starter disassembly. A fuse puller shall be provided with each.

D. The vacuum contactors shall be roll-out type and either latched or magnetically-held and rated 400 amperes (open rating) with single-break high-pressure type main contacts with weld-resistant alloy contact faces. The vacuum contactor contact wear shall be easily checked with the use of a "go/no-go" feeler gauge, included with each contactor.

E. A built-in test circuit shall be included to permit checking of the starter control and pilot circuit, with the high-voltage de-energized and isolated, and the contactor in its normal position or in the draw-out position. The control circuit shall be capable of being energized through a polarized plug connector from an external 115-volt supply while in the test mode.

F. The low-voltage control compartment shall be isolated and barriered from the high-voltage area and mounted on a panel with a separate low-voltage access door. The low-voltage control components shall be accessible by sliding the panel out of the low-voltage control compartment.

2.04 BUS

A. When starters are grouped together in a line-up, the horizontal main bus shall be located on top of the starter enclosure in its own separate, 10-inch high enclosure and isolated from the starters. To allow for ease of maintenance or extension of line-ups without disassembling starters, the main bus shall be front, top and side accessible.

B. Starters shall be connected by an insulated vertical bus.

C. All bus bars shall be silver plated copper.

D. Provide a 1/4 x 2-inch ground bus.

2.05 WIRING/TERMINATIONS

A. All control wire shall be UL approved.

B. Standard control wire shall be 14GA, stranded, tin-plated, gray, dual-rated type XLPE (3173) 125 degree C, SIS 90 degree C.

C. Current transformer circuits shall utilize #12 wire with the same characteristics as above. Provide shorting blocks for all current transformers.

D. Provide "plug-in" terminal blocks, rated 600V, 50A with "clamping collar".

E. Wire markers shall be heat shrink sleeve type as identified in Specification 16195.

F. "Clamping-collar" type terminals shall be used to terminate control wiring. Current transformer circuits shall be provided with ring-type terminals.

2.06 CONTROLLERS (STARTERS)

A. Motor controllers shall be reduced voltage solid state soft starters (RVSS) type as indicated on the Contract Drawings.

B. Mechanically–latched contactors shall be provided for power factor connection capacitors where indicated on the Contract Drawings.

C. The following equipment shall be provided.

1. Each induction motor Reduced Voltage Solid State Starter Soft Starter shall include the following equipment:

a. Medium Voltage Sections

(1) Three isolated line connectors

(2) One drawout three-pole isolating switch

(3) Three current limiting power fuses

(4) One roll-out main vacuum contactor assembly

(5) One roll-out bypass vacuum contactor assembly

(6) Three MV Solid-State Power Stack assemblies

(7) One line reactor

(8) One control circuit transformer as sized by the RVSS manufacturer

(9) Two control circuit primary fuses

(10)One control circuit secondary fuse

(11)One run test circuit

(12)Four electrical interlocks

(13)Three load terminals

(14)Three current transformers, one per phase

(15)One zero sequence ground fault current transformer

b. Low Voltage Section

(1) Slide-out panel

(2) One set of control relays

(3) One set of control terminal blocks

(4) One solid-state reduced-voltage control assembly

(5) One GE Multilin No. 369 Relay

c. The solid-state reduced-voltage starter shall be an integrated unit with power SCRs, logic board, paralleling bypass contractor, and electronic overload relay enclosed in a single molded housing. The SCR-based power section shall consist of six (6) back-to-back SCRs and shall be rated for a minimum peak inverse voltage rating of 1500 volts PIV. Units using triacs or SCR/diode combinations shall not be acceptable. Resistor/capacitor snubber networks shall be used to prevent false firing of SCRs due to dv/dt effects.

d. The logic board shall be mounted for ease of testing, service and replacement. It shall have quick disconnect plug-in connectors for current transformer inputs, line and load voltage inputs and SCR gate firing output circuits. The logic board shall be identical for all ampere ratings and voltage classes and shall be conformally coated to protect environmental concerns.

e. The paralleling run bypass contactor shall energize when the motor reaches 90% of full speed and close/open under one (1) times motor current.

f. Starter shall be provide with electronic overload protection as standard and shall be based on inverse time-current algorithm. Overload protection shall be capable of being disabled during ramp start for long acceleration loads via a DIP switch setting on the device keypad. Units using bimetal overload relays are not acceptable.

(1) Overload protection shall be adjusted via the device keypad and shall have a motor full load ampere adjustment from 30 to 100% of the maximum continuous ampere rating of the starter.

(2) The starter shall have selectable overload class setting of 5, 10, 20 or 30 via a DIP switch setting on the device keypad.

(3) The starter shall be capable of either an electronic or mechanical reset after a fault.

(4) Overtemperature protection (on heat sink) shall be standard.

(5) The starter shall provide protection against improper line-side phase rotation as standard. Starter shall shut down if a line-side phase rotation other than A-

B-C exists. This feature can be disabled via a DIP switch on the device keypad.

(6) The starter shall provide protection against a phase loss or unbalance condition as standard. Starter will shut down if a 50% current differential between any two phases is encountered. This feature can be disabled via a DIP switch on the device keypad.

(7) The starter shall provide protection against a motor stall condition as standard. The feature shall be disabled via a DIP switch on the device keypad.

(8) The starter shall provide protection against a motor jam condition as standard. This feature can be disabled via a DIP switch on the device keypad.

(9) The starter shall be provided with a form C normally open (NO), normally closed (NC) contact that shall change state when a fault condition exists. Contacts shall be rated 60 VA (resistive load) and 20 VA (inductive load). In addition, an LED display on the device keypad shall indicate type of fault (Overtemperature, Phase Loss Jam, Stall, Phase Reversal, and Overload).

g. The following control function adjustments on the device keypad are required:

(1) Selectable Torque Ramp Start or Current Limit Start

(2) Adjustable Kick Start Time, 0-2 seconds

(3) Adjustable Kick Start Torque, 0-85%

(4) Adjustable Ramp Start Time, 0.5-180 seconds

(5) Adjustable Initial Starting Ramp Torque, 0-85%

(6) Adjustable Smooth Stop Ramp Time, 0-60 seconds.

h. Maximum continuous operation shall be at 115% of continuous ampere rating.

2. Two full voltage draw-out trucks shall be provided. If the SCR truck assembly needs repair, it shall be possible to replace the SCR truck with a full voltage truck and use the RVSS assembly as an across-the-line starter until the SCR truck is repaired.

2.07 ENCLOSURES

A. Provide NEMA 1 enclosures for indoor applications.

B. Structures shall be welded steel frame, formed steel doors and side sheets, flat steel top and rear covers.

C. Hardware shall be stainless steel.

2.08 NAMEPLATES

A. Nameplates shall be 2-inch high x 2-1/2 inch wide, laminated black with white core.

B. Unit nameplate and device marker lettering shall be 3/16 inch high.

2.09 FINISH

A. The finish for internal and external surfaces shall consist of a coat of ANSI 61 (gray) thermosetting, polyester, powder paint applied electrostatically to pre-cleaned phosphatized steel and aluminum surfaces.

2.10 ACCESSORIES

A. Provide a portable lifting device for transporting contactor outside its compartment.

2.11 SPARE FUSES

A. Provide six (6) spare fuses for each type and size installed fuse.

2.12 WARNING LABELS

A. Place OSHA safety labels on each door or removable panel which allows access to over 600 volts. Text for safety labels shall be DANGER - HIGH VOLTAGE - KEEP OUT.

2.13 CURRENT TRANSFORMERS

A. Provide ITI (Instrument Transformer, Inc., a GE Company) Model No. 780, Relay Class C100 current transformers.

PART 3: EXECUTION

3.01 FACTORY TESTING

A. The following standard factory tests shall be performed on the equipment provided under this section. All tests shall be in accordance with the latest version of ANSI and NEMA standards.

1. Wiring check

2. Sequence of control circuits

3. Dielectric Test (Hi Pot) per NEMA ICS 3 Part 2 at 2000 volts plus 2.25 times nominal voltage, for 60 seconds, phase-to-phase and phase-to-ground

B. The manufacturer shall provide six (6) certified copies of factory test reports.

3.02 FIELD QUALITY CONTROL

A. Provide the services of a qualified factory-trained manufacturer's representative to assist the Contractor in installation and start-up of the equipment specified under this section for a period of six (6) working days. The manufacturer's representative shall provide technical direction and assistance to the Contractor in general assembly of the equipment, connections and adjustments, and testing of the assembly and components contained therein.

B. The following minimum work shall be performed by the Contractor under the technical direction of the manufacturer's service representative:

1. Meggar bus

2. Ground test

3. Verify that all mechanical interlocks are functioning properly.

C. The Contractor shall provide six (6) copies of the manufacturer's field start-up report.

3.03 MANUFACTURER'S CERTIFICATION

A. A qualified factory-trained manufacturer's representative shall certify in writing that the equipment has been installed, adjusted and tested in accordance with the manufacturer's recommendations.

B. The Contractor shall provide six (6) copies of the manufacturer's representative's certification.

3.04 TRAINING

A. The Contractor shall provide a 6 hour training session for eight (8) owner representatives. The training session shall be repeated twice so that 24 owner representatives can be trained. Training sessions shall be held at the jobsite location where the switchgear is installed. Training sessions shall be held before the switchgear is energized.

B. The training session shall be conducted by a manufacturer's qualified representative and include instructions on assembly, starters and other major components.

3.05 INSTALLATION

A. The Contractor shall install all equipment per the manufacturer's recommendations and the contract drawings.

B. All necessary hardware to secure the assembly in place shall be provided by the contractor.

C. Check all bolted connections to assure that they are in accordance with the manufacturer's recommended torque requirements.

3.06 RVSS PROTECTIVE SETTINGS

A. All protective settings for the RVSS shall be developed by the switchgear manufacturer.

3.07 RVSS PROGRAMMING

A. All programming for the RVSS shall be performed by the switchgear manufacturer.

3.08 GE MULTILIN RELAY SETTINGS

A. GE Multilin Relay settings are required to be developed and set as indicated in Specification 16172, Medium Voltage Motors. Coordinate with the medium voltage motor vendor for GE Multilin Relays to be set.

3.09 FIELD TESTING

A. Sequence the control circuits to verify the controller will start and run properly.

3.10 WARNING LABELS

A. Verify that required OSHA warning labels have been installed.

END OF SECTION

Section 16950

UNINTERRUPTIBLE POWER SUPPLIES

PART 1: GENERAL

1.01 SECTION INCLUDES

A. This section covers Uninterruptible Power Supplies to ensure reliable control system power.

1.02 MEASUREMENT AND PAYMENT

A. No separate payment will be made under this section. Include the cost for this work in the lump sum base bid.

1.03 REFERENCES

A. Each variable frequency drive shall be designed, constructed, and tested in accordance with applicable standards and shall be designed for installation in accordance with the NEC. The UPS shall be UL listed.

1.04 SUBMITTALS

A. Submit product data and shop drawings under provisions of Section 01330 - Submittal Procedures.

1. Submit in complete packages grouped to permit review of related items as outlined in these specifications.

2. Bind submittals in three-ring binders with complete indexing and tab dividers. Completely tag and label equipment information to correspond with Drawings.

3. Review of Submittals will be for conformance to Contract Documents and for application to specified functions.

B. Product Data: Submit descriptive product literature including manufacturer's specifications for each component specified.

C. Drawings

1. Name of manufacturer.

2. Types and model numbers.

3. Rated UPS load capacity and run-time.

4. Overall dimensions and weights.

5. Schematics, including maintenance bypass.

6. Wiring diagrams, including all internal and external devices and terminal blocks.

7. List of diagnostic indicators.

D. Quality Control Submittals

1. Field Reports: UPSes commissioned in the field by the contractor or manufacturer are to include start-up report. The report will include installation overview, any parameter changes to default settings, and confirmation of fail-over test.

E. Operations and Maintenance (O&M) Data.

1. Submit operation and maintenance data notebook in accordance with Section 01782 - Operations and Maintenance Data.

2. Information and drawings submitted must reflect the final installed condition. Revise documents requiring updates following testing and start-up.

3. In addition to the content specified in Section 01782 - Operation and Maintenance Data, provide the following information:

   a. Name, address and telephone number of the UPS supplier's local service representative.

   b. Complete list of supplied system hardware parts with full model numbers referred to system part designations, including spare parts and test equipment provided.

   c. Copy of approved submittal information and system shop drawings as specified in Paragraph 1.3, Submittals, with corrections made to reflect actual system as tested, delivered and installed at the site. Provide half-size blackline reproductions of all shop drawings larger than 11 inches x 17 inches.

   d. Configuration and monitoring software.

   e. Complete up-to-date system software documentation.

   f. Manufacturer's hardware, software, installation, assembly and operations manuals for the UPS. Provide all manuals in PDF format on CD-RW or DVD-RW.

F. Project Record Documents

1. Submit record documents under provisions of Section 01785 - Project Record Documents.

1.05 QUALITY ASSURANCE

A. Manufacturer's Qualifications: Manufacturer shall be a company specializing in manufacturing products specified in this Section, having proven compatibility with the City's existing facilities and at least 3 years of documented experience. The company shall maintain service facilities within 100 miles of the City of Houston.

1.06 DELIVERY, STORAGE AND HANDLING

A. Deliver products to site in factory-sealed containers. Store and protect products under provisions of Section 01610 - Basic Product Requirements.

B. Check for damage upon receiving products on site.

C. Store products in a clean, dry area; maintain temperature in accordance with NEMA ICS 1.

1.07 ENVIRONMENTAL REQUIREMENTS

A. Maintain area free of dirt and dust during and after installation of products.

B. Provide temporary heating and air conditioning units and equipment required to maintain environmental conditions specified for UPS units..

PART 2: PRODUCTS

2.01 UNINTERRUPTIBLE POWER SUPPLY (UPS)

A. Manufacturer and Model: Powerware 9130 Tower Model with BD Relay Interface Card and HS-MBP Maintenance Bypass, or equal approved by end user.

B. Rating: Provide uninterrupted conditioned power to PLC and critical components for 30 minutes at a load of 1500 VA.

C. Description: Continuous-duty, online, solid state uninterruptible power system incorporating double-conversion technology. The UPS shall operate in conjunction with the existing electrical system to protect electronic equipment from power disturbances

that may occur in utility power such as voltage fluctuations, brownouts, blackouts, power surges and power sags.

D. Modes of Operation: The UPS shall operate as an online, double-conversion UPS with the following modes:

1. Normal Mode: The rectifier shall derive power as needed from the commercial AC utility or generator source and supply filtered and regulated DC power to the online inverter. The inverter shall convert the DC power at its input to highly regulated and filtered AC power for the critical loads.

2. High Efficiency Mode: In the presence of favorable incoming utility conditions, the UPS shall optimize its operating state to maximize its efficiency.

3. Battery Mode: Upon complete failure of utility power, the UPS shall provide power to the critical loads through the inverter, from the UPS' internal or extended batteries. When utility power returns, the unit shall return to Normal Mode operation.

4. Bypass Mode: The automatic bypass shall transfer the critical load to the commercial AC source, bypassing the UPS' inverter/rectifier, in the case of an overload, load fault, or internal failure.

5. Standby Mode: When initially attached to a utility or other power source, the UPS shall start in Standby Mode until the user initiates power to the critical load. In this mode, the UPS shall recharge the batteries, but power shall not be supplied to the critical load.

E. TVSS Rating: Total energy rating more than 520J, 320V/130J MOV from L-N, L-G, and N-G.

F. Input Voltage: 90-138 VAC, 45 to 65 Hz.

G. Output Power Factor: 0.9.

H. Input Line Cord: 6-ft. attached line cord with 5-15P.

I. Output Receptacles: Six 5-15R

J. Operating Temperature: 32 to 104 degrees F.

K. Serial Communication Interfaces: RS-232 port (DB9) and USB (Universal Serial Bus) for communication to vendor-supplied Power Management Software.

L. Relay Output: Include optional Relay Output Card for status reporting to the PLC.

M. External Maintenance Bypass: Include HS-MBP.

2.02 HOT–SWAP MAINTENANCE BYPASS

A. Manufacturer and Model: Powerware HS-MBP-15 Maintenance Bypass, or equal approved by end user.

B. Rating: 1440 VA

C. Description: Power Distribution Unit (PDU) style maintenance bypass configured as follows:

1. Line cords with plugs to input line power and UPS output

2. Six receptacles for outputs to loads

3. Selector switch for normal and bypass.

PART 3: EXECUTION

3.01 INSTALLATION

A. Verify that location is suitable for UPS and HS-MBP installation.

B. Do not install UPS until building environment can be maintained within the service conditions required by the manufacturer.

3.02 RELATED INSTALLATION REQUIREMENTS

A. Inspect completed installation for physical damage, proper alignment, anchorage and grounding.

END OF SECTION

Section 16990

FACILITIES FOR CENTERPOINT ENERGY'S USE

PART 1: GENERAL

1.01 Section Includes:

A. Details for facilities constructed by this Contractor for CenterPoint Energy's use.

1.02 CENTERPOINT ENERGY TERMS AND CONDITIONS PACKAGE

A. CenterPoint Energy will provide a Terms and Conditions Package which outlines requirements for electric service and provides construction details for underground duct banks, conduit stub-ups at terminal poles and transformer foundations. The CenterPoint Energy Terms and Conditions Package will not be available until construction starts on the project. Preliminary copies of CenterPoint Energy standard construction details are attached to this specification for use in bidding.

1.03 CENTERPOINT ENERGY INSPECTIONS

A. All facilities constructed for CenterPoint Energy's use must be inspected by CenterPoint Energy. Make arrangements with CenterPoint Energy for inspections.

1.04 MEASUREMENT AND PAYMENT

A. No separate payment will be provided for work performed under this Section. Include the cost for this work in the lump sum base bid.

B. Refer to Section 01270 – Measurement and Payment.

PART 2 PRODUCTS

2.01 PVC CONDUIT

A. CenterPoint Energy's Terms and Conditions document, when it becomes available, will indicate the minimum grade of PVC conduit to be used is Type EB. Do not use Type EB PVC conduit, use Schedule 40 PVC conduit in CenterPoint Energy duct banks.

PART 3: EXECUTION – NOT USED

END OF SECTION

THIS PAGE INTENTIONALLY LEFT BLANK

06275/040104

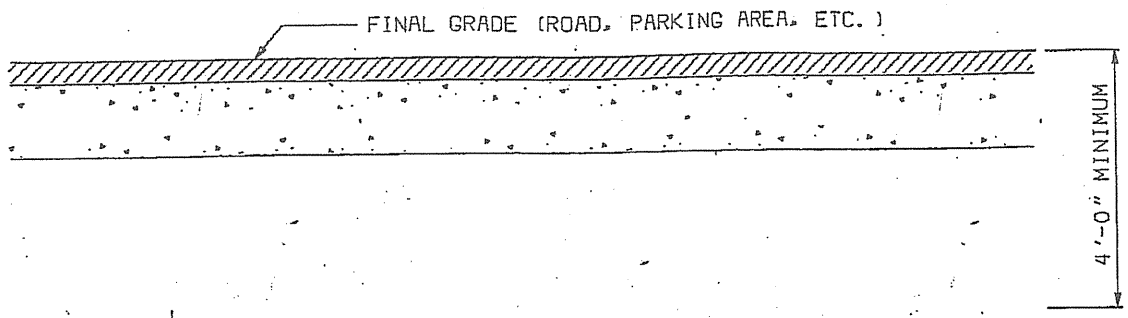

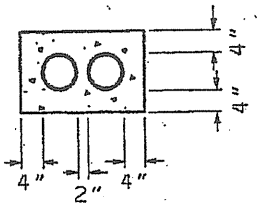

2 - 6"
CONDUITS

NOTE:
THE CUSTOMER AND/OR ITS CONTRACTOR IS TO REQUEST A PRECONSTRUCTION MEETING PRIOR TO STARTING CONSTRUCTION BY CALLING (713) 207-6229.

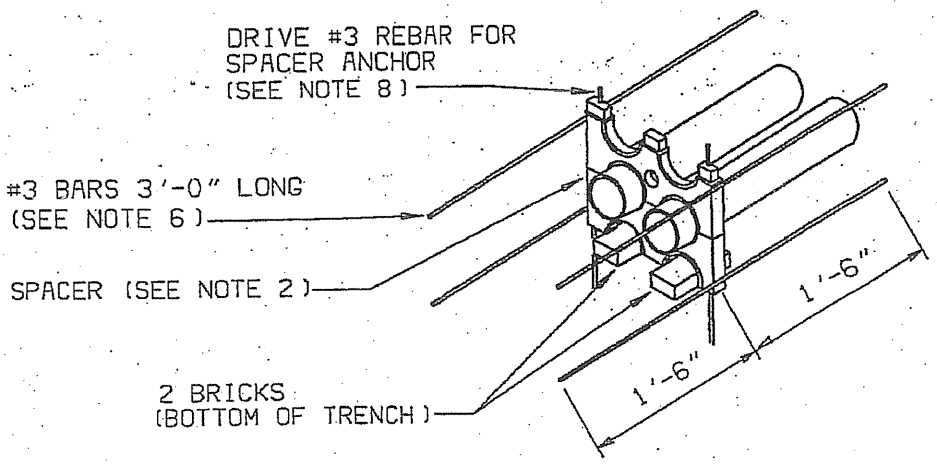

NOTES:
1. CONDUIT TO BE PVC, MINIMUM GRADE TYPE EB.
2. SPACERS SHOULD BE INSTALLED NOT MORE THAN 10'-0" APART.
3. CONDUITS TERMINATING AT MANHOLES SHOULD BE SLOPED 0.5% DOWN TOWARD MANHOLE.
4. ALL EXTERIOR CONCRETE COVER DIMENSIONS ARE MINIMUM.
5. CONCRETE SHALL BE IN ACCORDANCE WITH CNP SPECIFICATION 007-221-01, LATEST REVISION.
6. PLACE REINFORCING BARS IN 4 CORNERS OF THE CONCRETE WHERE SPACERS ARE USED.
7. ON COLD JOINT CONCRETE POUR USE #5 REBAR (3'-0" IN LENGTH, EXPOSED 1'-6").
8. LENGTH OF REBAR FOR SPACER ANCHOR WILL VARY PER DUCT BANK HEIGHT.
9. CONDUITS ENDS SHALL BE PLUGGED WITH A DUCT CAP OR OTHER TYPE OF CAPPING DEVICE.
10. A ONE FOOT (1') VERTICAL CLEARANCE MUST BE MAINTAINED BETWEEN CNP'S DUCTBANK AND ALL NON-CNP FACILITIES CROSSING THE DUCTBANK.
11. A FIVE FOOT (5') HORIZONTAL CLEARANCE MUST BE MAINTAINED BETWEEN CNP'S DUCTBANK AND ALL NON-CNP FACILITIES RUNNING PARALLEL TO THE DUCTBANK (JOINT TRENCHING NOT PERMITTED).
12. INSTALL JET LINE IN ALL CONDUITS AND A #14 AWG WIRE IN ONE CONDUIT.

THREE PHASE DUCTBANK
FEEDER
BASED ON DISTRIBUTION STANDARD DLFS2C

092686/100102

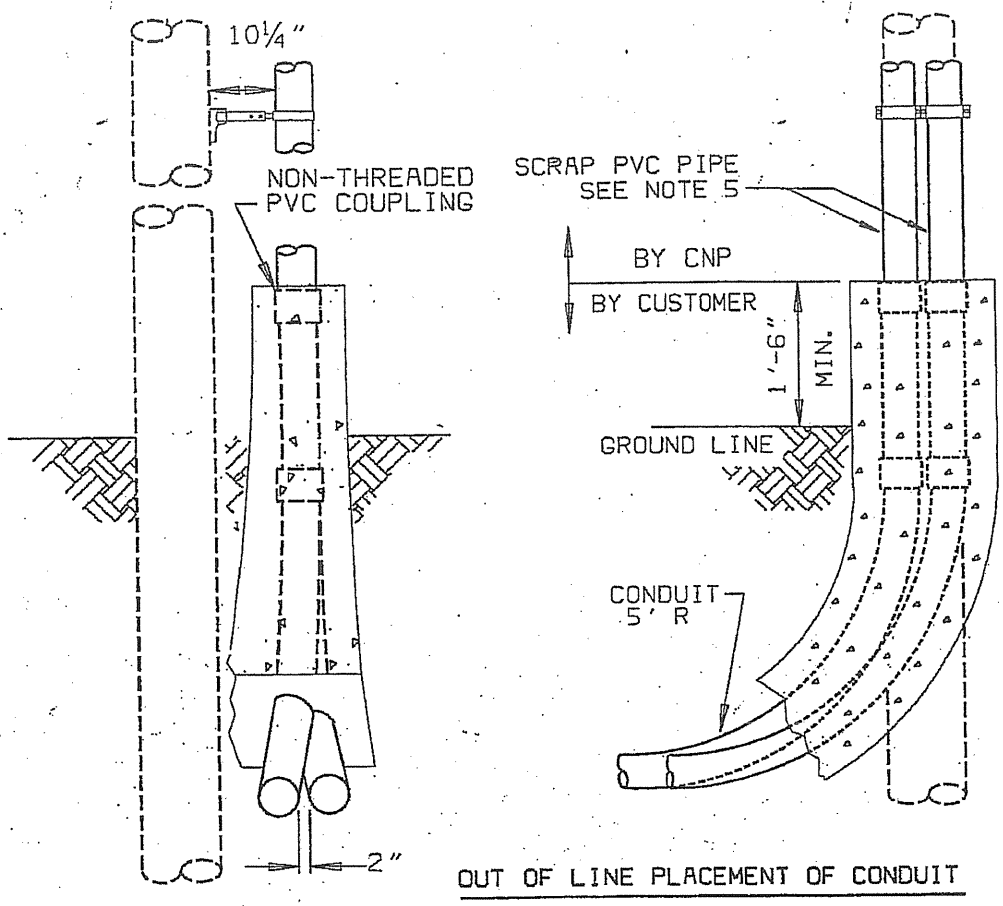

NOTES:

1. CONDUIT BENDS AT TERMINAL POLE SHALL BE PVC.
2. BRACE THE POLE SECURELY BEFORE TRENCHING.
3. INSTALL CONDUIT BENDS TO BASE OF POLE. ADD PORTIONS OF STRAIGHT CONDUIT AS NECESSARY TO OBTAIN THE PROPER HEIGHT ABOVE FINAL GRADE.
4. ATTACH COUPLING TO END OF CONDUIT.
5. INSERT, **BUT DO NOT GLUE**, A SHORT PIECE OF SCRAP PVC CONDUIT INTO THE TOP COUPLING. TIE CONDUIT TO BRACKET.
6. FORM AREA AROUND PEDESTAL TO THE TOP OF THE COUPLING. FORM PEDESTAL SO THAT NO CONCRETE WILL CONTACT POLE.
7. AFTER INSPECTION BY CNP, POUR CONCRETE TO TOP OF COUPLINGS.
8. ALL CONDUITS SHALL HAVE A MINIMUM 4" CONCRETE COVER.

TERMINAL POLE CONDUIT
PLACEMENT 12KV & 35 KV
BASED ON DISTRIBUTION STANDARD 65-500

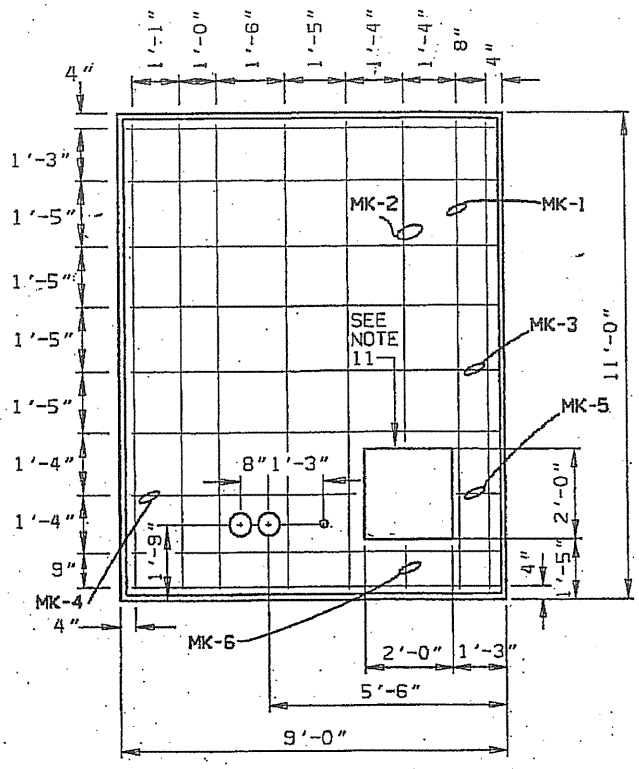

PLAN

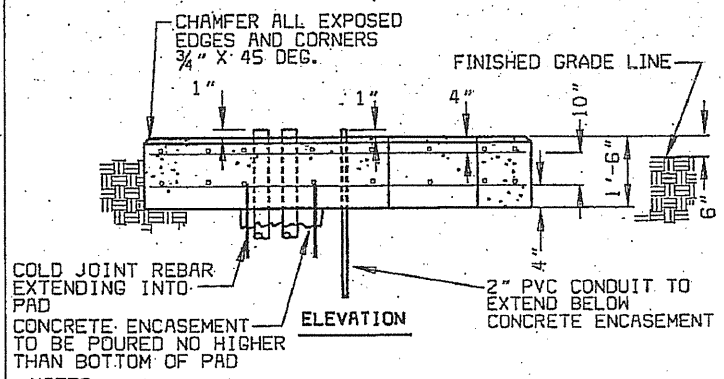

ELEVATION

REINFORCING SCHEDULE PER FOUNDATION				
MARK	QTY.	SIZE	LENGTH	REMARKS
MK-1	14	#7	10'-6"	STRAIGHT
MK-2	2	#7	7'-0"	STRAIGHT
MK-3	16	#7	8'-6"	STRAIGHT
MK-4	2	#7	5'-3"	STRAIGHT
MK-5	2	#7	0'-9"	STRAIGHT
MK-6	2	#7	1'-0"	STRAIGHT

MATERIAL ESTIMATE PER FOUNDATION	
DESCRIPTION	QUANTITY
REINFORCING STEEL #7	636 LBS
CONCRETE (5 SACK)	5½ CU. YDS.
TYPE EB OR BETTER PVC CONDUIT, 90 DEG, 60" R	2
2" PVC CONDUIT	5 FT

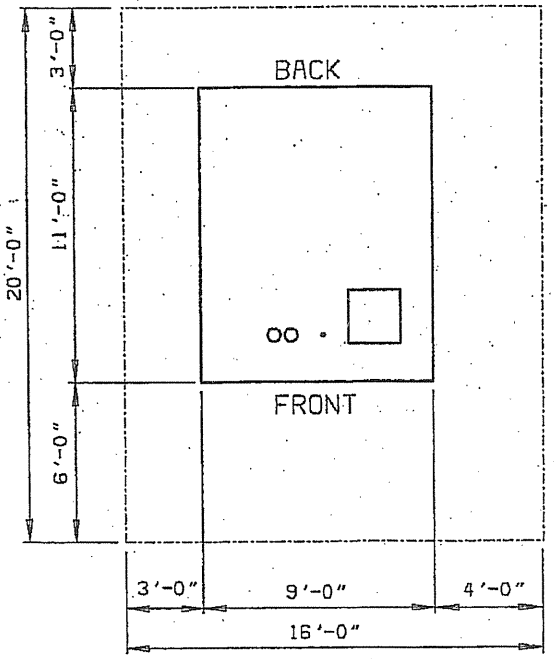

MINIMUM EASEMENT REQUIREMENTS

EQUIPMENT
WEIGHT 43,000 LBS
MAXIMUM

NOTES:

1. CONCRETE SHALL BE IN ACCORDANCE WITH CNP SPECIFICATION 007-221-01, LATEST REVISION (MINIMUM COMPRESSION IN 28 DAYS, 3000 PSI).
2. REINFORCING STEEL SHALL BE INTERMEDIATE GRADE DEFORMED BARS IN ACCORDANCE WITH A.S.T.M. SPECIFICATION A-615, GRADE 60, OR BETTER.
3. ALL SPLICES IN REINFORCING SHALL LAP A LENGTH EQUAL TO 24 BAR DIAMETERS.
4. ALL DIMENSIONS ON REINFORCING ARE TO THE CENTER OF BARS.
5. CONCRETE SHALL BE THOROUGHLY WORKED AROUND REINFORCING, ANY EMBEDDED FIXTURES AND INTO ALL CORNERS OF FORMS.
6. IF REQUIRED, GROUT SHALL BE A MIXTURE OF 1 PART CEMENT TO 2 PARTS SAND WITH ENOUGH WATER TO PRODUCE A WORKABLE MIXTURE.
7. CONCRETE IS TO BE POURED ONLY WHEN THE ATMOSPHERIC TEMPERATURE IS A MINIMUM 40° F. (5° C.) AND RISING.
8. STRIP BACK ALL VEGETATION AND APPROXIMATELY 12" OF TOP SOIL. REMOVE ALL LOOSE CLODS AND STONES. BACKFILL AND THOROUGHLY COMPACT ALL CONDUIT TRENCHES AND HOLES BEFORE CONCRETE IS PLACED.
9. REINFORCING SHALL HAVE A MINIMUM OF 2½" CONCRETE COVER.
10. SLOPE PAD 1" FRONT TO BACK.
11. THE SQUARE OPENING IS FOR THE CUSTOMER'S SECONDARY CONDUITS.
12. CNP WILL NOT ALLOW OTHER FACILITIES TO PASS BENEATH ITS EQUIPMENT PADS. A ONE FOOT MINIMUM HORIZONTAL CLEARANCE SHALL BE MAINTAINED BETWEEN CNP PADS AND ALL OTHER FACILITIES.

500-5000 KVA PMT
FOUNDATION, 12KV. & 35KV

BASED ON DISTRIBUTION STANDARD 80-400